API Well Number: 43037500380000

STATE OF UTAH
DEPARTMENT OF NATURAL RESOURCES
DIVISION OF OIL, GAS AND MINING

FORM 3

AMENDED REPORT ☑

APPLICATION FOR PERMIT TO DRILL

1. WELL NAME and NUMBER
Aneth A-414X

2. TYPE OF WORK
DRILL NEW WELL ◉ REENTER P&A WELL ○ DEEPEN WELL ○

3. FIELD OR WILDCAT
GREATER ANETH

4. TYPE OF WELL
Water Injection Well Coalbed Methane Well: NO

5. UNIT or COMMUNITIZATION AGREEMENT NAME
ANETH

6. NAME OF OPERATOR
RESOLUTE NATURAL RESOURCES

7. OPERATOR PHONE
303 534-4600

8. ADDRESS OF OPERATOR
1675 Boradway Ste 1950, Denver, CO, 80202

9. OPERATOR E-MAIL
pflynn@resoluteenergy.com

10. MINERAL LEASE NUMBER (FEDERAL, INDIAN, OR STATE)
UTSL 070968

11. MINERAL OWNERSHIP
FEDERAL ◉ INDIAN ○ STATE ○ FEE ○

12. SURFACE OWNERSHIP
FEDERAL ◉ INDIAN ○ STATE ○ FEE ○

13. NAME OF SURFACE OWNER (if box 12 = 'fee')

14. SURFACE OWNER PHONE (if box 12 = 'fee')

15. ADDRESS OF SURFACE OWNER (if box 12 = 'fee')

16. SURFACE OWNER E-MAIL (if box 12 = 'fee')

17. INDIAN ALLOTTEE OR TRIBE NAME (if box 12 = 'INDIAN')

18. INTEND TO COMMINGLE PRODUCTION FROM MULTIPLE FORMATIONS
YES ○ (Submit Commingling Application) NO ◉

19. SLANT
VERTICAL ◉ DIRECTIONAL ○ HORIZONTAL ○

20. LOCATION OF WELL	FOOTAGES	QTR-QTR	SECTION	TOWNSHIP	RANGE	MERIDIAN
LOCATION AT SURFACE	788 FSL 818 FWL	SWSW	14	40.0 S	23.0 E	S
Top of Uppermost Producing Zone	788 FSL 818 FWL	SWSW	14	40.0 S	23.0 E	S
At Total Depth	788 FSL 818 FWL	SWSW	14	40.0 S	23.0 E	S

21. COUNTY
SAN JUAN

22. DISTANCE TO NEAREST LEASE LINE (Feet)
788

23. NUMBER OF ACRES IN DRILLING UNIT
640

25. DISTANCE TO NEAREST WELL IN SAME POOL (Applied For Drilling or Completed)
1220

26. PROPOSED DEPTH
MD: 5797 TVD: 5797

27. ELEVATION - GROUND LEVEL
4756

28. BOND NUMBER
UTB000169

29. SOURCE OF DRILLING WATER / WATER RIGHTS APPROVAL NUMBER IF APPLICABLE
09-1428

Hole, Casing, and Cement Information

String	Hole Size	Casing Size	Length	Weight	Grade & Thread	Max Mud Wt.	Cement	Sacks	Yield	Weight
COND	24	16	0 - 90	65.0	C-75 Casing/Tubing	9.4	Unknown	134	1.25	26.0
SURF	14.75	10.75	0 - 1677	40.5	J-55 ST&C	9.4	Premium Lite High Strength	465	1.88	12.5
							Premium Plus	133	1.16	15.8
PROD	9.875	7	0 - 5614	26.0	J-55 LT&C	10.2	50/50 Poz	490	1.9	12.4
							Type V	72	1.31	13.5
							50/50 Poz	660	1.88	12.5
							Type V	134	1.15	15.8
OPEN	6.125	0	0 - 5797	0.0	No Pipe Used	0.0	No Used	0	0.0	0.0

ATTACHMENTS

VERIFY THE FOLLOWING ARE ATTACHED IN ACCORDANCE WITH THE UTAH OIL AND GAS CONSERVATION GENERAL RULES

- ☑ WELL PLAT OR MAP PREPARED BY LICENSED SURVEYOR OR ENGINEER
- ☑ COMPLETE DRILLING PLAN
- ☐ AFFIDAVIT OF STATUS OF SURFACE OWNER AGREEMENT (IF FEE SURFACE)
- ☐ FORM 5. IF OPERATOR IS OTHER THAN THE LEASE OWNER
- ☐ DIRECTIONAL SURVEY PLAN (IF DIRECTIONALLY OR HORIZONTALLY DRILLED)
- ☑ TOPOGRAPHICAL MAP

NAME Sara Bohl **TITLE** Regulatory Analyst **PHONE** 303 534-4600

SIGNATURE **DATE** 10/16/2012 **EMAIL** sbohl@ResoluteEnergy.com

API NUMBER ASSIGNED
43037500380000

APPROVAL
Permit Manager

CONFIDENTIAL

RECEIVED: November 01, 2012

Geology - Anticipated Geologic Markers

Project/Area	Aneth Unit			
Operator	Resolute			
Well Name	A-414X			
County/State	San Juan		UT	
GL / KB	GL	4,756.5	KB	4,742.0
Spot/Sect/Twnshp/Rng	SW SW / 818' FWL & 788' FSL	14	40S	23E
Vert/deviated/horiz?	Vertical - redrill injector			
Projection	Utah South (NAD 27)			
Surface XY Location	X	after survey	Y	after survey
Latitude / Longitude	Lat	34.3044734	Long	-109.363614
Proposed Total Depth	TVD	5797.0	Subsea	-1,055.0

	Name	Measured Depth (sub-KB)	Subsea TVD	Objective?
Geologic Tops (MD,TVD,SS)	**Navajo**	769	3,973	
	Chinle	1,627	3,115	
	Organ Rock	2,899	1,844	
	Hermosa	4,739	4	
	Ismay	5,479	-737	
	Gothic Shale	5,629	-887	
	Desert Creek I	5,652	-910	Primary
	Desert Creek II	5,678	-936	Primary
	Desert Creek III	5,724	-982	
	Chimney Rock	5,787	-1,045	

RNRC Geologist	Jason Burris		Office	303-573-4886 x1335
	Home	303-274-0746	Cell	303-763-0998
	Alternate: Sean Smith		Office	303-573-4886 x1215
			Cell	303-902-3772
Mud Logging Contractor	Selman and Associates, LTD			800-578-1006
	Contact	Debbie Hillman		432-563-0084
Logging Contractor	Weatherford		Grand Junction	970-263-5801

CONFIDENTIAL

RECEIVED: October 16, 2012

Project Overview

The target formation for the proposed Aneth Unit A414X is the Desert Creek formation. The purpose for the proposed well is to complete a injection well in the Greater Aneth Area. A vertical well will be drilled to TD (5797') in the Desert Creek formation and a full suite of logs will be run. Anticipated start date of project is August 2012 ending September 2012. Anticipated duration of project from spud to completion is 48 days.

Well Location

Surface Location: SW SW/ 818' FWL & 788' FSL

SEC 14, T40S, R23E

Lat 34.3044734 Long -109.363614

Surface Elevation: 4756' GL

Proposed Depth: 5797'

Target Formation & Anticipated Water, Oil, Gas and Mineral Resources

The target formation for the Aneth Unit A414X is the Desert Creek formation.

The principal underground sources of drinking water USDW in the Greater Aneth area include the Entrada Sandstone, Navajo Sandstone, and Wingate Sandstone, which collectively comprise the Navajo aquifer. The projected top of the Navajo in the proposed well is at a depth of 769 feet. The overlying Morrison aquifer and isolated Dakota and Alluvial aquifers may also be present. The top of the Chinle formation separates the fresh water aquifers above from non-usable saline ground water aquifers below and is generally accepted as the base of fresh water in the Greater Aneth area. The top of the Chinle formation is projected at a depth of 1,627 feet below ground level in the proposed well.

Intermediate casing in the proposed well will be set and cemented from surface through the top of the Chinle to protect the USDW above.

Potential oil, gas and mineral resources to be encountered include the Ismay and Desert Creek zones of the Paradox formation, which are the primary hydrocarbon reservoirs in the southern Paradox Basin.

Production casing in the proposed well will be cemented from TD to surface in 2 stages.

Anticipated Reservoir Pressures and Temperatures

The Ismay and Desert Creek zones are expected to be normally pressured as a result of the ongoing waterflood in the Aneth Unit. Current pressures are 3,000 to 3,200 psi at 5,500 to 5,700 feet. Two offset injection wells will be shut-in as soon as the well is spud to allow pressure within the reservoir to dissipate. It is anticipated that Production casing will be sent in the upper Ismay formation and that all the lower Ismay and Dessert Creek members will be drilled open hole using a nitrogen underbalanced system.

CONFIDENTIAL

RECEIVED: October 16, 2012

BOPE Specifications

Well Pressure Control Equipment and Procedures:

Blowout preventer equipment (BOPE) as discussed below will be installed and tested prior to drilling of the surface casing shoe and for each subsequent phase of drilling operations. Accumulators will be tested for pre-charge pressure and for holding pressure on the manifold prior to connection to the stack. Annular BOPs will be tested on nipple up and every 7 days thereafter, first to 200 psi, to simulate field well control situations, and then to the rated working pressure. Each test will be held for 15 minutes. The choke manifold will be operated and circulated through for kill rate pressures with each change of bottom hole assembly (BHA), but at least daily, using 2 slow pump rates, one at idle and one 10 strokes above that. All BOPE testing will be recorded and a copy of the pressure charts maintained with the tour sheet or drilling log.

CONFIDENTIAL

Conductor Pipe Diverter System

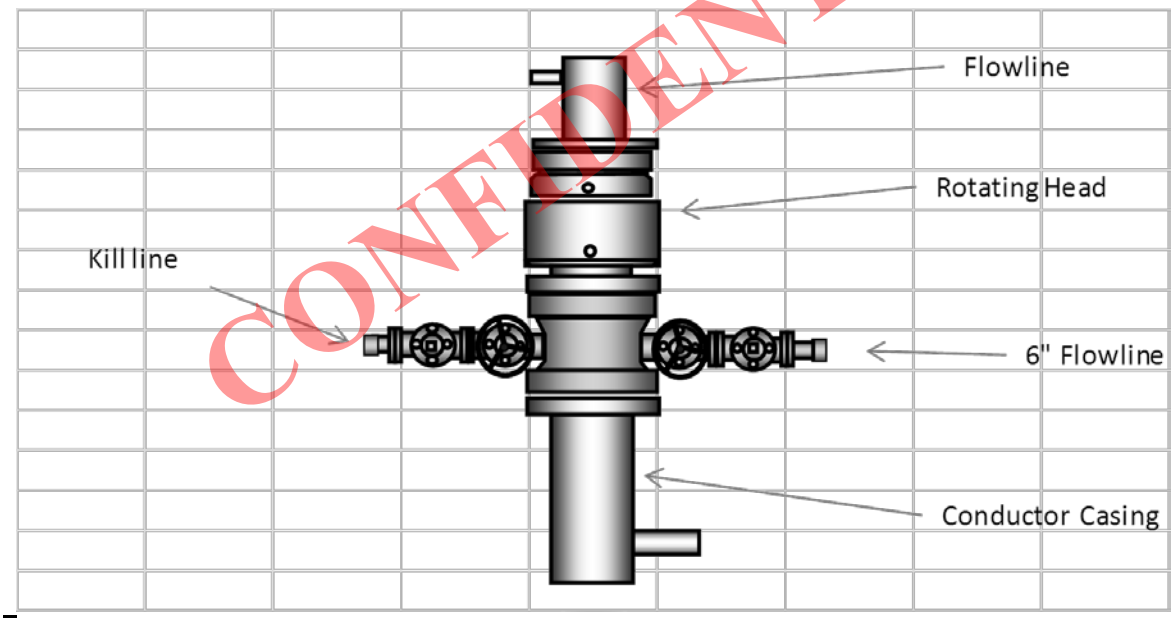

A diverter system as illustrated above will be installed to control well flows encountered at relatively shallow depths from ±90 to ±1,677' feet. The diverter system includes a conductor pipe, 350 psi working pressure rotating head with 6 inch full opening hydraulic valve and 6" minimum diameter divert line. The divert line valve is kept open so that flow can not be impeded to tanks and emergency pit. All diverter lines will be securely staked and will be straight lines or will use tee blocks or are targeted with running tees. All diverter line valves and other components will be 150 psi minimum working pressure.

RECEIVED: October 16, 2012

Surface Casing BOPE System

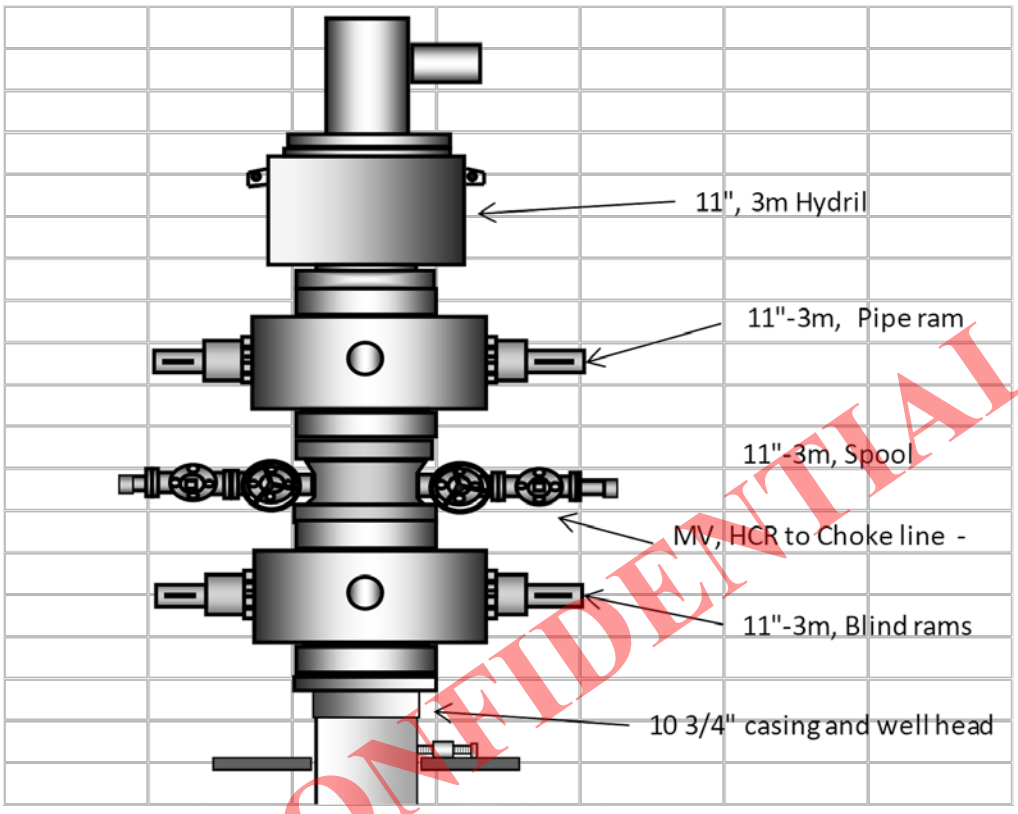

CONFIDENTIAL

RSRA System w/HCR Valve and Choke Manifold

A RSRA system with HCR valve and rotating head as illustrated above will be installed to control well flows encountered during drilling from 1,677' feet to 7" casing setting depth. Full-opening, flanged valves will be used on all outlets, flowlines and the choke manifold. Kill and choke lines will be constructed as straight lines or will use tee blocks or running tees. Kill and choke lines will have minimum diameters of 2 and 3 inches respectively

RECEIVED: October 16, 2012

Production Casing BOPE System

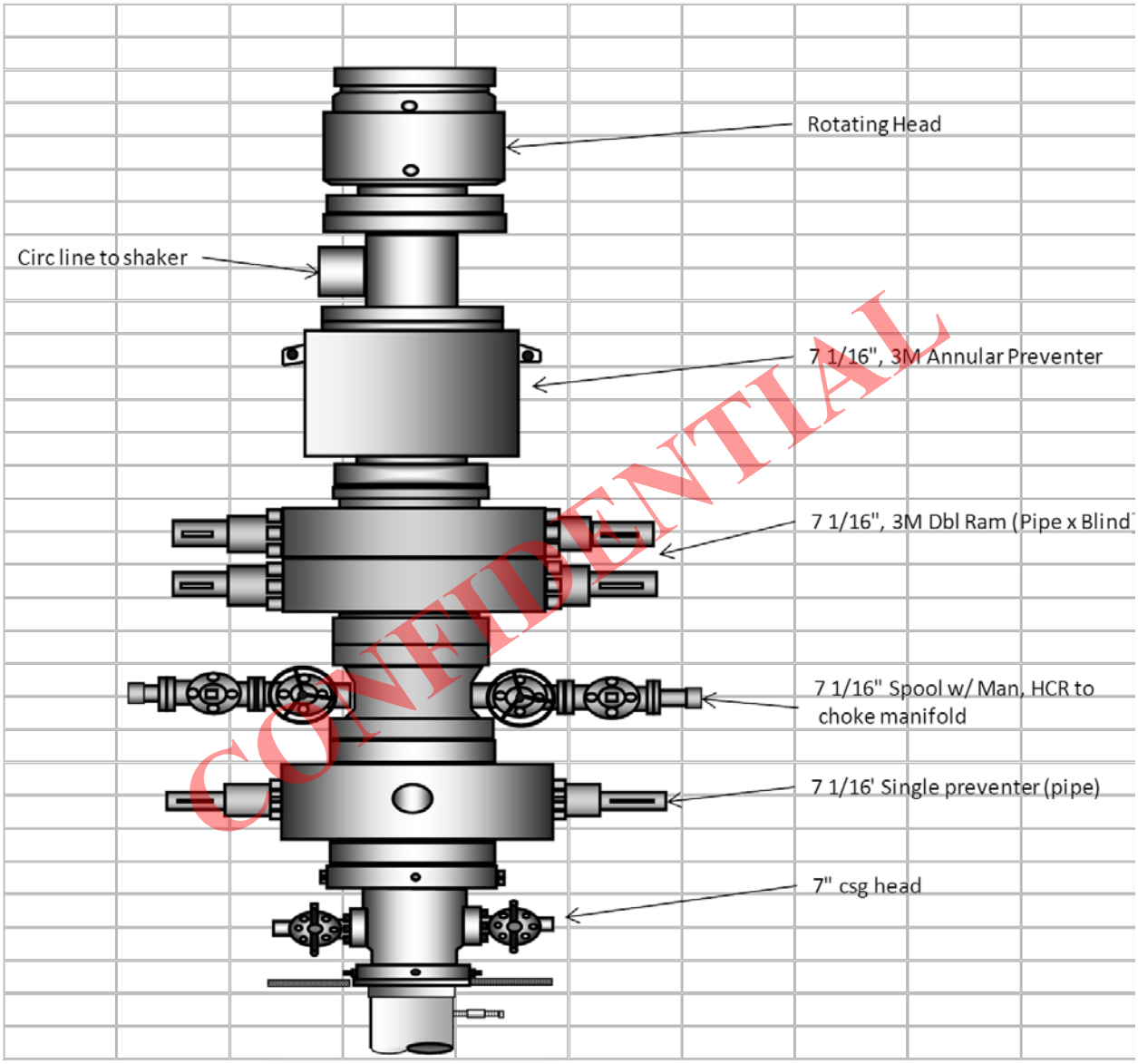

CONFIDENTIAL

RSRRA System w/Rotating Head, HCR Valve and Choke Manifold

A RSRA system with HCR valve and rotating head as illustrated above will be installed to control well flows encountered during drilling from 5,614' to 5,797' or TD. Full-opening, flanged valves will be used on all outlets, flowlines and the choke manifold. Kill and choke lines will be constructed as straight lines or will use tee blocks or running tees. Kill and choke lines will have minimum diameters of 2 and 3 inches respectively

RECEIVED: October 16, 2012

Choke Mainfold

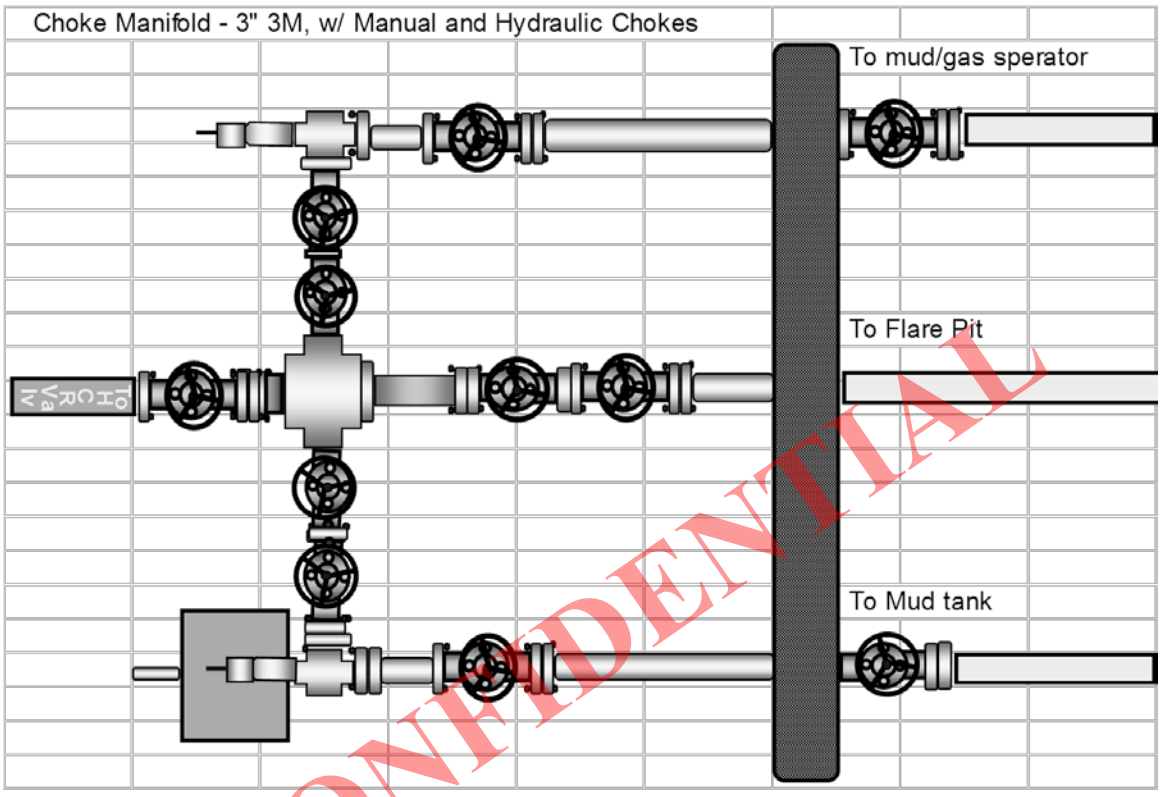

RECEIVED: October 16, 2012

Casing Program &Cement Program

Conductor Casing / Cementing								
Condcutor	Hole Size	Depth	Mud Wt	Hyd Press	Cement Wt	Cmt Hyd Press	Delta Press	
	24	90	8.30	38.84	26.00	121.68	82.84	
	Casing Siz	Grade	Cplg	Wt/ft	Collapse	Internal Yield	Joint Strength	Pipe Yield
	16.00	C-75	PE	65.00	740	1730	322,000	541,000
	SF= Collapse 1.125, Internal Press 1.00, joint Stength 1.80, Pipe Yield 1.25							
		Type	Wt	Yield	Vol-Cu Yds	Additives		
Cement	Lead	Redi-mix	26	Grout	5.82			
	Tail							
Stg Tool								
	Lead					Additives		
	Tail							
Shoe	Notched collar							
Cntrlzrs	None							
Other								

Surface	Surface Casing and Cement									
Surface	Hole Size	Depth	Mud Wt	Mud Hyd Press	Cement Wt	Cmt Hyd Press	Delta Press			
	14.750	1677.00	9.00	784.84	12.4/15.8	1121.71	336.87			
	Casing Size	Grade	Cplg	Wt/ft	Collapse	Internal Yield	Joint Strength	Pipe Yield		
	10.750	J-55	STC Rd	40.50	1580	3130	420,000	629,000		
	SF= Collapse 1.125, Internal Press 1.00, joint Stength 1.80, Pipe Yield 1.25									
		Type	Wt	Yield	Vol-bbl	Vol-Sks	Additives			
Cement	Lead	Prm Light	12.50	1.88	155.50	464.43	5 lbm/sk Kol-Seal, 2% CaCl, .125 lbm/sk			
								Poly-E-Flake		
	Tail	Premium	15.80	1.16	27.42	132.70	.125 lbm/sk Poly-E-Flake			
Stg Tool	Stage Tool: none									
	Lead									
	Tail									
Shoe	HES Trophy, Auto fill									
Cntrlzrs	API 10 3/4, (12): 3 on bottom jt, 1 every 4th joint to surface									
Other										

CONFIDENTIAL

RECEIVED: October 16, 2012

Production Casing and Cement

Prod	Hole Size	Depth	Mud Wt	Hyd Press	Cement Wt	Cmt Hyd Press	Delta Press	
	9.875	5614	10.00	2919.28	12.4/15.8	3621.57	702.29	
	Casing Siz	Grade	Cplg	Wt/ft	Collapse	Internal Yield	Joint Strength	Pipe Yield
	7.000	J-55	LTC Rd	26.00	4320	4980	367,000	415,000
	SF= Collapse 1.125, Internal Press 1.00, joint Stength 1.80, Pipe Yield 1.25							

		Type	Wt	Yield	Vol-bbl	Vol -Sks	Additives
Cement	Lead	50/50 poz	12.40	1.90	165.65	489.52	5 lbm/sk Gilsonite, .125 lbm/sk
							Poly-E-flake, .4% Halad® 9
	Tail	Type V	13.50	1.31	16.62	71.24	.125 lbm/sk Poly-E-Flake, .3%
							Halad R 9
Stg Tool	HES Type P ES Stage Cementing Tool Set @ 2,500' (+,-)						
	Lead	50/50 Poz	12.50	1.88	220.86	659.63	5 lbm/sk Gilsonite, .125 lbm/sk
							Poly-E-flake
	Tail	Type V	15.80	1.15	27.30	133.28	.125 lbm/sk Poly-E-Flake, .3%
							Halad R9
Shoe	HES float shoe & HES float collar,						
Cntrlzrs	API 7 ", (46): 2 on bottom jt, 1 every 4th joint to stage tool, one either side of stage						
	tool, then 1 every 4th jt to surface						
Other							

CONFIDENTIAL

RECEIVED: October 16, 2012

Mud Program &Under Balanced or Air/Gas Drilling

Drilling fluids as specified below will be used to maintain well control during drilling. Sufficient quantities of drilling fluids will be kept onsite and tests to determine density, viscosity, gel strength, filtration, and pH will be performed daily. Kill Weight Brine(10 ppg) will be on hand in volume to kill well if necessary.

1) Conductor and Surface Casing
Depth: 90' to ±1,677'
Bit Size: 20" – 14 ¾'
Mud Type: FW/Spud mud
Hole Volume: 280 bbls
Pit Volume: 500 bbls

	Minimum	Maximum	Units
Mud Weight	8.3	9.4	#/gal
Drill Solids	4	6	Percent
pH	9	9.5	
Funnel Viscosity	26	40	sec/qt
Fluid Loss	NC	NC	cc/30 min

2) Vertical Well Bore
Depth: ±1,677' to ±5,614' picked by Mud logger.
Bit Size: 9 7/8"
Mud Type: FW/gel/PHPA/ LSND
Hole Volume: 300 bbls
Pit Volume: 500 bbls

Mud Properties	Minimum	Maximum	Units
Mud Weight	9.7	10.2	#/gal
Drill Solids	4	6	Percent
pH	9	10	
Plastic Viscosity	4	10	
Yield Point	6	12	
Funnel Viscosity	35	40	sec/qt
Fluid Loss	12	15	cc/30 min

3) Open Hole Well Bore
Depth: ±5,614' to ±5,797'TD
Bit Size: 6 1/8"" with Underreamer 12" OD
Mud Type: N2
Hole Volume: bbls
Pit Volume: bbls

Mud Properties	Minimum	Maximum	Units
Mud Weight	8.8 – Formation KW	10.2	#/gal
Drill Solids	na	na	
pH	na	na	
Plastic Viscosity	na	na	
Yield Point	na	na	
Funnel Viscosity	Na	Na	
Fluid Loss	na	na	

CONFIDENTIAL

RECEIVED: October 16, 2012

Weatherford International will supply Nitrogen for the Underbalanced portion of open hole from 5,614' to 5,797'. The package consist of 2 Ariel compressors with 1350SCFM capacity and one N2 membrane Unit with 1500 SCFM capacity. These units will rig up directly in front of the Dog House on the Location Layout diagram

Logging, Testing, Coring Program

Logging of the vertical well bore will include Induction or Laterlog, Density/Neutron, Sonic (possible Dipole). No other logs or test are anticipated.

Anticipated Drilling Hazards

In addition to the general hazards listed in the table below: Hydrogen sulfide (H2S) in excess of 100 ppm is anticipated in the Desert Creek zone. Potential for exposure to H2S near areas of fluid breakout (i.e. flowline, shaker, floor connections, etc.) will be minimized by having an overbalanced mud system. An H2S Drilling Operations Plan has been developed and is attached to this drilling plan.

Potential Hazards	Preventive/Corrective Measures
Water flow between ±780' and ±1,627'	Have conductor set, increase mud weight and use diverter to divert flow from around substructure to pit
Pressure kick when drilling into the Ismay formation.	Maintain mud weight to avoid kick around. 10.6 #/gal minimum
Corrosion from H2S in Ismay	A thin coating amine will be run as a corrosion inhibitor to protect downhole equipment
Possible differential sticking from nearby production from Desert Creek	If sticking occurs, consider using spotting acid to break free
Low fracture gradient	Use two stage cement job on long string

CONFIDENTIAL

RECEIVED: October 16, 2012

Drilling Tools

Conventional rotary drilling tools will be used to drill the proposed well. This will included Tri-Cone roller bits as well as PDCs in conjunction with nominal sized Drill collars appropriate to hole size and weight on bit needs. Conventional Drill Pipe will be used for all drilling operations appropriate to hole size.

Drilling Tools by Interval				
0-90'				
Tool	Size	Length-Ft	Weight-lbs	Description
Bit	20"	2	560	Mill tooth Tri-Cone bit
Drill Collars	8"	90	14400	Smooth Drill Collars 160#/ft
90' to 1650'				
Bit	14 3/4"	1.5	225	Mill tooth Tri-Cone bit
Drill Collars	8"	180	28800	Smooth Drill Collars 160#/ft
Drill Collars	6 1/2"	300	30600	Smooth Drill Collars 102#/ft
1677' to 5614'				
Bit	9 7/8"	1	80	Tri-Cone TCI bits and PDC
Drill Collars	6 1/2"	540	55080	Smooth Drill Collars 102#/ft
5614' to 5797'				
Bit	6 1/8"	1	22	Tri-Copne TCI bit
Hole Opener	43/4"x12"	4.5	75	Hole opener(underreamer) 16#/ft
Drill Collars	4 3/4"	240	6480	Smooth Drill Collars 24#/ft

CONFIDENTIAL

RECEIVED: October 16, 2012

API Well Number: 43037500380000

Well Location - Aneth Unit A-414X

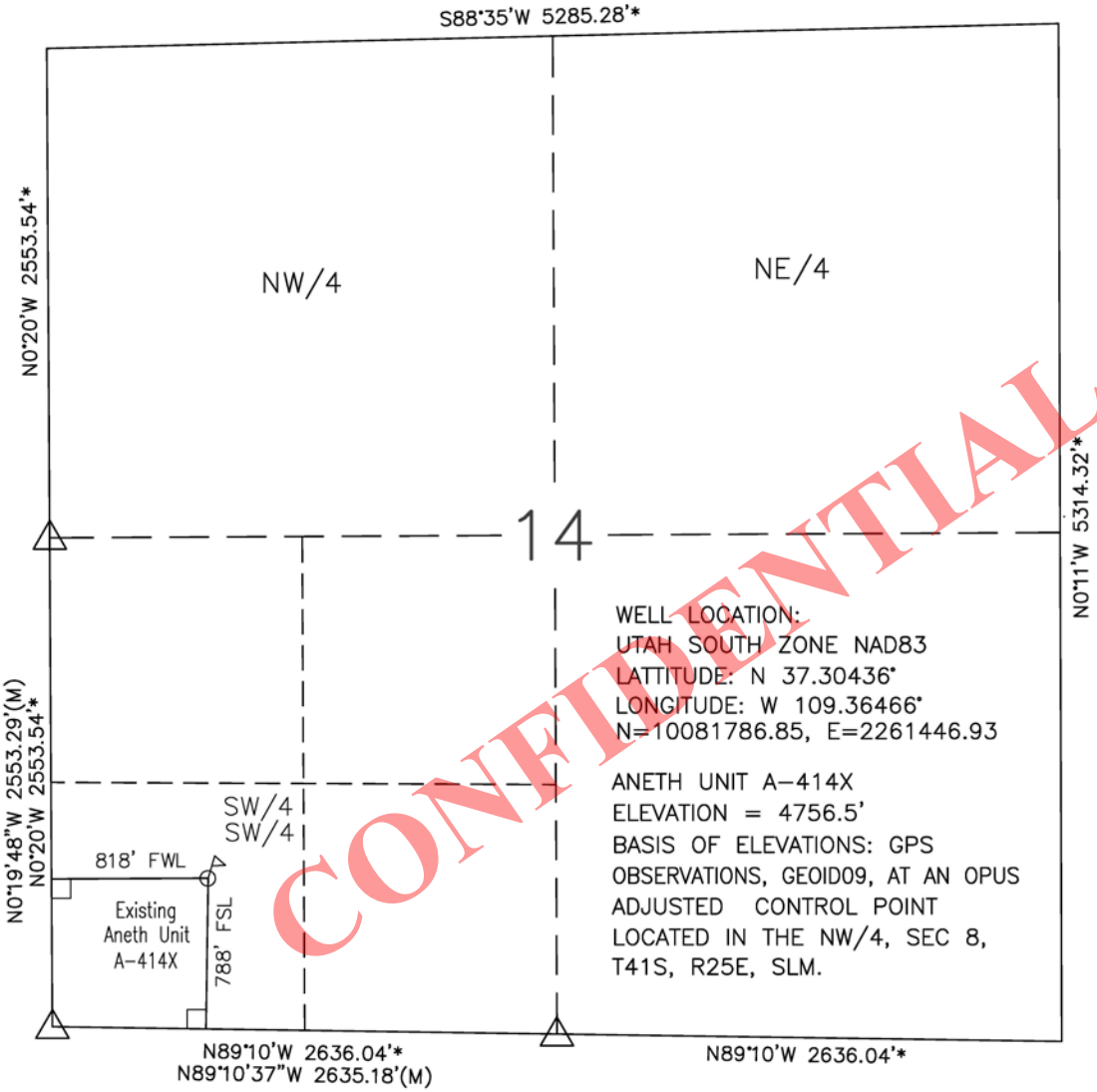

CONFIDENTIAL

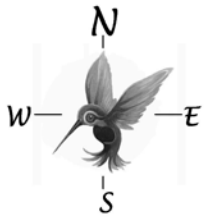

BASIS OF BEARINGS
GPS TRUE NORTH

0 500 1000

1"=1000'
GROUND

LEGEND:

- △ FND USBLM 3-1/4" BC
- ∟ 90° TIE
- (M) MEASURED
- * RECORD – BLM 1980
- ⚐ WELL LOCATION

I, Gerald G. Huddleston, do hereby certify that I am a registered Utah land surveyor holding certificate number 161297 as prescribed under the laws of the State of Utah, and I further certify that under authority of the owner I have surveyed the well location as shown hereon and that the same is correct and true to the best of my knowledge and belief.

EXHIBIT A

FOOTAGE: 788' FSL 818' FWL	RESOLUTE NATURAL RESOURCES	
SEC 14, T40S, R23E, SLM, SAN JUAN COUNTY, UT		
LAT: N 37.30436° LON: W 109.36466°	SURVEYED: 06/13/12	
	DRAWN BY: GEL	DATE: 06/17/12
ELEVATION: 4756.5' at ground level (NAVD88)	NOTE:	

HUMMINGBIRD SURVEYING, LLC --- P.O. Box 416 Montezuma Creek, UT 84534 --- 970-570-5108

API Well Number: 43037500380000

37°18'15" N, 109°21'53" W WGS84TOPO! map printed on 06/17/12 from "AU A-414X.tpo"

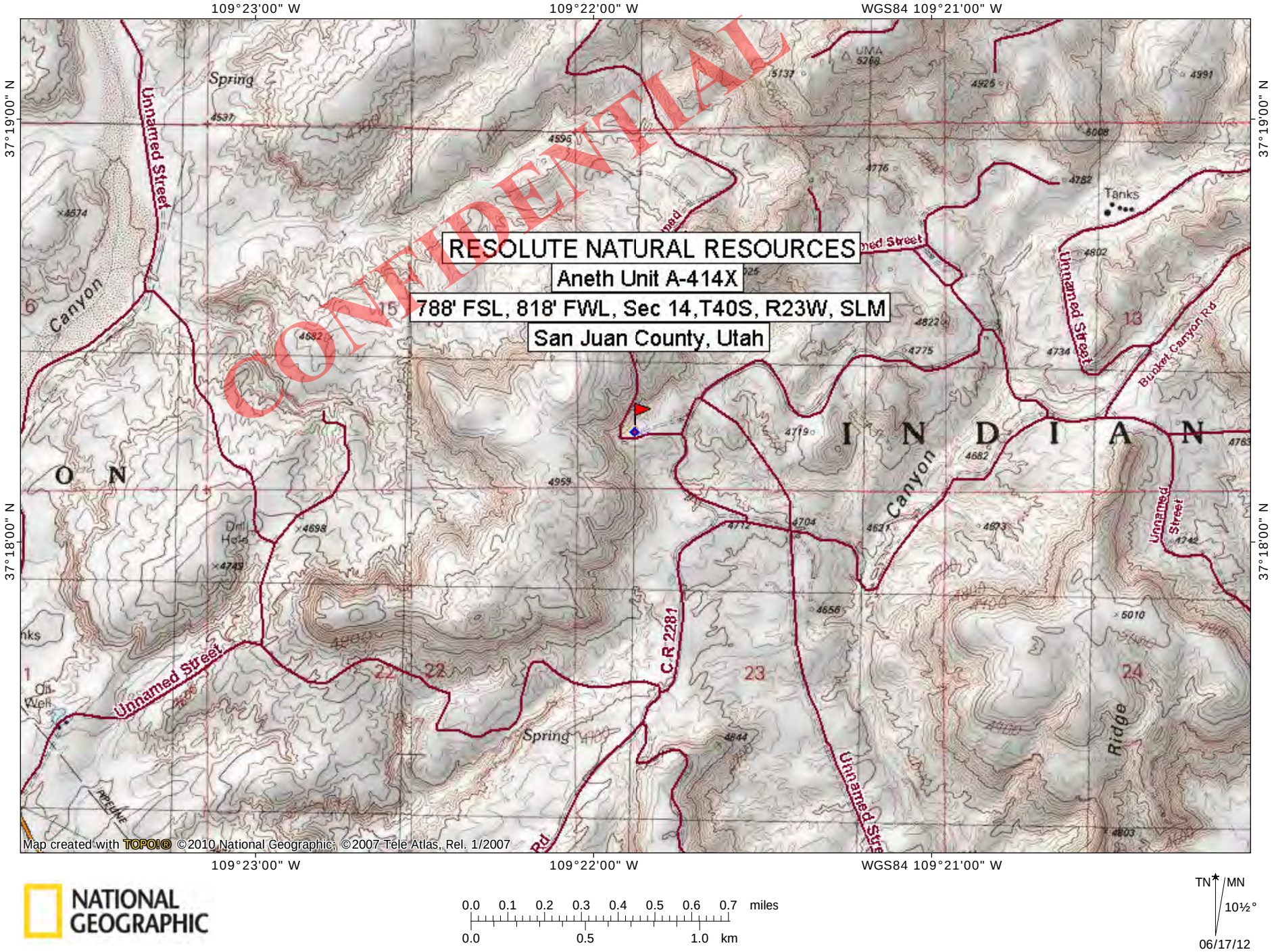

NATIONAL GEOGRAPHIC

0.0 0.1 0.2 0.3 0.4 0.5 0.6 0.7 miles
0.0 0.5 1.0 km

TN MN
10½°
06/17/12

RECEIVED: October 16, 2012

API Well Number: 43037500380000

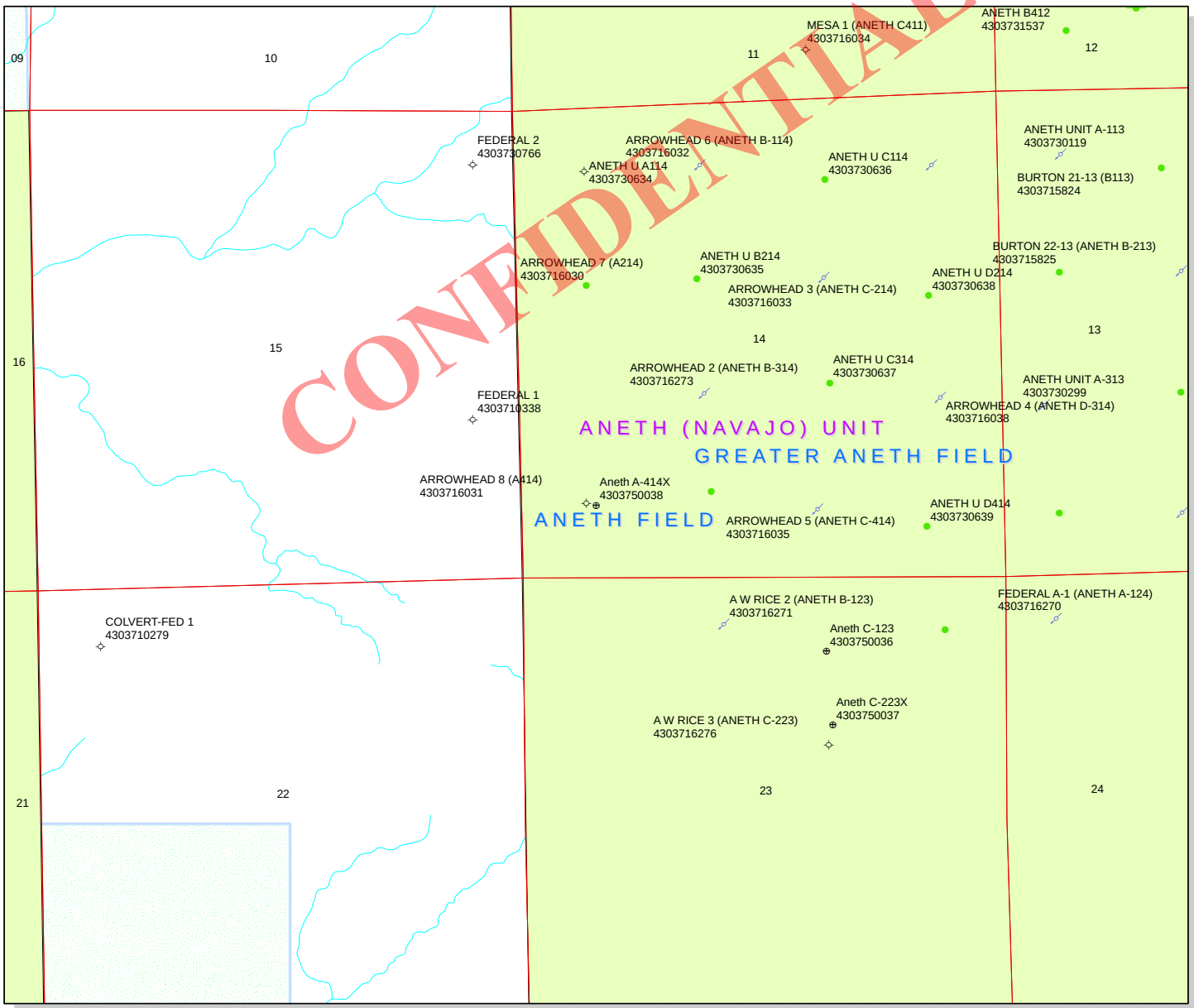

API Number: 4303750038

Well Name: Aneth A-414X

Township T40.0S Range R23.0E Section 14

Meridian: SLBM

Operator: RESOLUTE NATURAL RESOURCES

Map Prepared:
Map Produced by Diana Mason

Units
STATUS
- ACTIVE
- EXPLORATORY
- GAS STORAGE
- NF PP OIL
- NF SECONDARY
- PI OIL
- PP GAS
- PP GEOTHERML
- PP OIL
- SECONDARY
- TERMINATED

Fields
STATUS
- Unknown
- ABANDONED
- ACTIVE
- COMBINED
- INACTIVE
- STORAGE
- TERMINATED

Wells Query
Status
- APD - Aproved Permit
- DRL - Spuded (Drilling Commenced)
- GIW - Gas Injection
- GS - Gas Storage
- LOC - New Location
- OPS - Operation Suspended
- PA - Plugged Abandoned
- PGW - Producing Gas Well
- POW - Producing Oil Well
- SGW - Shut-in Gas Well
- SOW - Shut-in Oil Well
- TA - Temp. Abandoned
- TW - Test Well
- WDW - Water Disposal
- WIW - Water Injection Well
- WSW - Water Supply Well
- Bottom Hole Location - OilGasDb

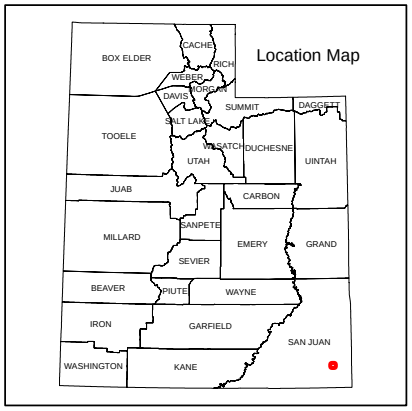

N

1,400 700 0 1,400 Feet

1:13,484

RECEIVED: October 16, 2012

WORKSHEET
APPLICATION FOR PERMIT TO DRILL

APD RECEIVED: 10/16/2012
API NO. ASSIGNED: 43037500380000
WELL NAME: Aneth A-414X
OPERATOR: RESOLUTE NATURAL RESOURCES (N2700)
PHONE NUMBER: 303 534-4600
CONTACT: Sara Bohl

PROPOSED LOCATION: SWSW 14 400S 230E
Permit Tech Review: ✔

SURFACE: 0788 FSL 0818 FWL
Engineering Review: ☐

BOTTOM: 0788 FSL 0818 FWL
Geology Review: ✔

COUNTY: SAN JUAN
LATITUDE: 37.30438
LONGITUDE: -109.36467
UTM SURF EASTINGS: 644929.00
NORTHINGS: 4129893.00
FIELD NAME: GREATER ANETH
LEASE TYPE: 1 - Federal
LEASE NUMBER: UTSL 070968
PROPOSED PRODUCING FORMATION(S): DESERT CREEK
SURFACE OWNER: 1 - Federal
COALBED METHANE: NO

CONFIDENTIAL

RECEIVED AND/OR REVIEWED:

- ✔ **PLAT**
- ✔ **Bond:** FEDERAL - UTB000169
- ☐ **Potash**
- ☐ **Oil Shale 190-5**
- ☐ **Oil Shale 190-3**
- ☐ **Oil Shale 190-13**
- ✔ **Water Permit:** 09-1428
- ☐ **RDCC Review:**
- ☐ **Fee Surface Agreement**
- ☐ **Intent to Commingle**

Commingling Approved

LOCATION AND SITING:

- ☐ **R649-2-3.**

Unit: ANETH

- ☐ **R649-3-2. General**
- ☐ **R649-3-3. Exception**
- ✔ **Drilling Unit**

Board Cause No: Cause 152-7
Effective Date: 4/22/1998
Siting: Does not suspend general siting

- ☐ **R649-3-11. Directional Drill**

Comments: Presite Completed

Stipulations: 4 - Federal Approval - dmason

RECEIVED: November 01, 2012

GARY R. HERBERT
Governor

GREGORY S. BELL
Lieutenant Governor

State of Utah

DEPARTMENT OF NATURAL RESOURCES

MICHAEL R. STYLER
Executive Director

Division of Oil, Gas and Mining

JOHN R. BAZA
Division Director

Permit To Drill

****

Well Name: Aneth A-414X
API Well Number: 43037500380000
Lease Number: UTSL 070968
Surface Owner: FEDERAL
Approval Date: 11/1/2012

Issued to:
RESOLUTE NATURAL RESOURCES, 1675 Boradway Ste 1950, Denver, CO 80202

Authority:
Pursuant to Utah Code Ann. 40-6-1 et seq., and Utah Administrative Code R649-3-1 et seq., the Utah Division of Oil, Gas and Mining issues conditions of approval, and permit to drill the listed well. This permit is issued in accordance with the requirements of Cause 152-7. The expected producing formation or pool is the DESERT CREEK Formation(s), completion into any other zones will require filing a Sundry Notice (Form 9). Completion and commingling of more than one pool will require approval in accordance with R649-3-22.

Duration:
This approval shall expire one year from the above date unless substantial and continuous operation is underway, or a request for extension is made prior to the expiration date

General:
Compliance with the requirements of Utah Admin. R. 649-1 et seq., the Oil and Gas Conservation General Rules, and the applicable terms and provisions of the approved Application for permit to drill.

Conditions of Approval:
State approval of this well does not supercede the required federal approval, which must be obtained prior to drilling.

Notification Requirements:
The operator is required to notify the Division of Oil, Gas and Mining of the following actions during drilling of this well:

- Within 24 hours following the spudding of the well - contact Carol Daniels at 801-538-5284
  (please leave a voicemail message if not available)
  OR
  submit an electronic sundry notice (pre-registration required) via the Utah Oil & Gas website
  at http://oilgas.ogm.utah.gov

Reporting Requirements:
All reports, forms and submittals as required by the Utah Oil and Gas Conservation General Rules will be promptly filed with the Division of Oil, Gas and Mining, including but not limited to:

- Entity Action Form (Form 6) - due within 5 days of spudding the well
- Monthly Status Report (Form 9) - due by 5th day of the following calendar month
- Requests to Change Plans (Form 9) - due prior to implementation
- Written Notice of Emergency Changes (Form 9) - due within 5 days
- Notice of Operations Suspension or Resumption (Form 9) - due prior to implementation
- Report of Water Encountered (Form 7) - due within 30 days after completion
- Well Completion Report (Form 8) - due within 30 days after completion or plugging

Approved By:

For John Rogers
Associate Director, Oil & Gas

STATE OF UTAH
DEPARTMENT OF NATURAL RESOURCES
DIVISION OF OIL, GAS, AND MINING

FORM 9

5.LEASE DESIGNATION AND SERIAL NUMBER: UTSL 070968

SUNDRY NOTICES AND REPORTS ON WELLS

Do not use this form for proposals to drill new wells, significantly deepen existing wells below current bottom-hole depth, reenter plugged wells, or to drill horizontal laterals. Use APPLICATION FOR PERMIT TO DRILL form for such proposals.

6. IF INDIAN, ALLOTTEE OR TRIBE NAME:

7.UNIT or CA AGREEMENT NAME: ANETH

1. TYPE OF WELL Water Injection Well

8. WELL NAME and NUMBER: Aneth A-414X

2. NAME OF OPERATOR: RESOLUTE NATURAL RESOURCES

9. API NUMBER: 43037500380000

3. ADDRESS OF OPERATOR: 1675 Boradway Ste 1950 , Denver, CO, 80202

PHONE NUMBER: 303 534-4600 Ext

9. FIELD and POOL or WILDCAT: GREATER ANETH

4. LOCATION OF WELL
FOOTAGES AT SURFACE: 0788 FSL 0818 FWL
QTR/QTR, SECTION, TOWNSHIP, RANGE, MERIDIAN: Qtr/Qtr: SWSW Section: 14 Township: 40.0S Range: 23.0E Meridian: S

COUNTY: SAN JUAN

STATE: UTAH

11. CHECK APPROPRIATE BOXES TO INDICATE NATURE OF NOTICE, REPORT, OR OTHER DATA

TYPE OF SUBMISSION	TYPE OF ACTION		
✓ NOTICE OF INTENT Approximate date work will start: 8/30/2013	☐ ACIDIZE	☐ ALTER CASING	☐ CASING REPAIR
	☐ CHANGE TO PREVIOUS PLANS	☐ CHANGE TUBING	☐ CHANGE WELL NAME
	☐ CHANGE WELL STATUS	☐ COMMINGLE PRODUCING FORMATIONS	☐ CONVERT WELL TYPE
☐ SUBSEQUENT REPORT Date of Work Completion:	☐ DEEPEN	☐ FRACTURE TREAT	☐ NEW CONSTRUCTION
	☐ OPERATOR CHANGE	☐ PLUG AND ABANDON	☐ PLUG BACK
	☐ PRODUCTION START OR RESUME	☐ RECLAMATION OF WELL SITE	☐ RECOMPLETE DIFFERENT FORMATION
☐ SPUD REPORT Date of Spud:	☐ REPERFORATE CURRENT FORMATION	☐ SIDETRACK TO REPAIR WELL	☐ TEMPORARY ABANDON
	☐ TUBING REPAIR	☐ VENT OR FLARE	☐ WATER DISPOSAL
☐ DRILLING REPORT Report Date:	☐ WATER SHUTOFF	☐ SI TA STATUS EXTENSION	☐ APD EXTENSION
	☐ WILDCAT WELL DETERMINATION	✓ OTHER	OTHER: well spud

12. DESCRIBE PROPOSED OR COMPLETED OPERATIONS. Clearly show all pertinent details including dates, depths, volumes, etc.

Resolute spud this well on August 22, 2013. Daily drilling report is attached.

Accepted by the Utah Division of Oil, Gas and Mining
FOR RECORD ONLY
August 30, 2013

NAME (PLEASE PRINT) Sherry Glass

PHONE NUMBER 303 573-4886

TITLE Sr Regulatory Technician

SIGNATURE N/A

DATE 8/30/2013

RECEIVED: Aug. 30, 2013

RESOLUTE NATURAL RESOURCES

Daily Activity and Cost Summary

Well Name: A414X Aneth Unit

API Number	Section	Township	Range	Field Name	County	State/Province
4303750038	14	40S	23E	Aneth	San Juan	Utah

Ground Elevation (ft)	Casing Flange Elevation (ft)	KB-Ground Distance (ft)	KB-Casing Flange Distance (ft)	Regulatory Spud Date	Rig Release Date/Time
				8/28/2013 06:00	

Job Category	Primary Job Type	Secondary Job Type
Drilling & Completion	Drilling & Completion original	
Start Date	**End Date**	**Total AFE Amount (Cost)**
8/22/2013		2,043,293.00

Objective

The proposed A-414X location is a 40-acre injection offset to the B-414 producer, and 80-acre offset to the B-314 and B-123 injectors to the north and south of the B-414. It lies a quarter mile west of the B-414. Structurally, the A-414X is downdip from the B-414. This places the DC-I above the -960 oil-water contact (OWC), and most of the DC-II below the OWC at the proposed location.

.

Contractor	Rig Number	Rig on Report Date	Rig off report date
Peter Martin Rathole Drilling	1	8/22/2013	8/23/2013
Aztec Well Service	920	8/24/2013	

Report Number	Start Date	End Date	End Depth (ftKB)	Day Total (Cost)	Cum To Date (Cost)	Summary
1	8/22/2013	8/22/2013	40.0	4,057.00	4,057.00	Drilling 20" conductor hole section. F/0' T/ 40'
2	8/23/2013	8/23/2013	80.0	8,483.00	12,540.00	Drilling 20" conductor hole section. F/40' T/ 80', Set 16" conductor and cement. Rig Realesed on 8/23/2013 @ 17:00
3	8/24/2013	8/24/2013	80.0	28,100.00	40,640.00	Spotting in Aztec Rig 920 on location.
4	8/25/2013	8/25/2013	80.0	28,100.00	68,740.00	Rig up rig derrick and draw works.
5	8/26/2013	8/27/2013	80.0	28,100.00	96,840.00	Spool up drilling line and drum, fix top drive hoses, Waiting on weather to clear so we can get last pieces of rig into location, last of loads that came from Vernal.
6	8/27/2013	8/28/2013	610.0	28,100.00	124,940.00	Rigging up, Nipple up, M/U BHA, P/U BHA, TIH, Drill F/80' T/ 610'
7	8/28/2013	8/29/2013	1,720.0	67,411.00	192,351.00	Drilling 12-1/4" surface hole section F/610' T/1720'. Circulate condition hole, short trip, condition circulate hole, check for fill, TOOH.

Resolute

Daily Drilling Report

Well Name: A414X Aneth Unit
Report Date: 8/29/2013, Report # 7

Depth Start:	**610.0**
Depth End:	**1,720.0**
Depth Progress:	**1,110.00**
Daily Cost:	**67,411.00**
Cum Cost:	**192,351.00**

Regulatory Spud Date	Orig KB Ele...	Gr Elev (ft)	County	State/Province	Section	Block	Township	Range
8/28/2013			San Juan	Utah	14		40S	23E

API Number	Basin	Field Name	Working Interest (%)
4303750038	Paradox Basin	Aneth	62.39

AFE Number	Target Depth (ftKB)	Target Formation	Primary Job Type
10012003	5,797.0	DC-IIA	Drilling & Completion original

Total AFE Amount (Cost)	Job Category
2,043,293.00	Drilling & Completion

Summary of Operations

Daily Contacts	Contractor	Rig Number	Rig on Report Date	Rig off report date
Art Velasquez,	Aztec Well Service	920	8/24/2013	

Operations at Report Time
TOOH

Operations Summary
Drilling 12-1/4" surface hole section F/610' T/1720'. Circulate condition hole, short trip, condition circulate hole, check for fill, TOOH.

Remarks
Drilling the 12-1/4" surface hole section, we did not encounter any water losses or water gains.

Operations next 24 hours
Clean pits, haul in mud from D&J Rig 1.

Daily Field Est Total (Cost)	Cum Field Est To Date (Cost)	Daily Mud Field Est (Cost)	Time Log Total Hours (hr)	Problem Time Hours (hr)	Cum Prob Hrs (hr)
67,411.00	192,351.00		24.00	0.00	0.00

Time Log

Start Time	End Time	Dur (hr)	Code 2	End Depth (ftKB)	Com
06:00	10:00	4.00	Drilling	871.0	Drilling 12-1/4" surface hole section F/610' T/871'
10:00	12:00	2.00	Rig Repair	871.0	Replace Hyd Cylinder on top drive, Work on Hydraulic problem on control panel
12:00	14:00	2.00	Drilling	981.0	Drilling 12-1/4" surface hole section F/871" T/981'
14:00	16:30	2.50	Rig Repair	981.0	Install Pipe Grabber on Rig, And work on Power pak.
16:30	22:30	6.00	Drilling	1,370.0	Drilling 12-1/4" surface hole section F/981" T/1370'
22:30	03:00	4.50	Drilling	1,720.0	Drilling 12-1/4" surface hole section F/1370" T/1120'
03:00	04:30	1.50	Condition and/or Circulate mud	1,720.0	Circulate condition hole, work pipe, run polymer sweep, 600 GPM
04:30	05:00	0.50	Trips	1,720.0	TOOH Standing pipe back in Derrick
05:00	06:00	1.00	Downtime	1,720.0	TOOH Derrick employee was struck in forehead by drill pipe.

Mud Properties

Location	Depth (ftKB)	Density (lb/gal)	Funnel Viscosity (s/qt)	PV Override (Pa•s)	YP OR (lbf/10...	Gel 10 sec (lbf/100ft²)	Gel 10 min (lbf/100ft²)	pH
In	665.0	8.50	29	5.0	8.000			7.0

Low Gravity Solids (%)	Solids (%)	Sand (%)	Chlorides (mg/L)	Filtrate (mL/30min)	HTHP Filtrate (mL/30...	Percent Water (%)	Percent Oil (%)	Electric Stab (V)
	3.0	1.0	400.000			97.0	0.0	

Mud Lost to Hole (bbl)	Cum Mud Lost to Hole (bbl)

Mud Pumps

Pump Number	Liner Size (in)	Volume Per Stroke Override (bbl/stk)

Pump Operations

Pump Number	Model	SPR	Strokes (spm)	Pressure (psi)	Volumetric Efficiency (%)

Bit Records

BHA #	Bit Run	Drill Bit	Serial Number	Date/Time In	Depth In (ftKB)	IADC Bit Dull	Nozzles (1/32")	Rot ROP (ft/hr)
1	1	20in, <model>, <sn>		8/22/2013	0.0	1-1-NO-G-1-1-NO-CP		

Start Depth (ftKB)	End Depth (ftKB)	Cum Depth Drilled (ft)	Drilling Time (hr)	Cum Drilling Time (hr)	TFA (incl Noz) (in²)	Weight on Bit (1000lbf)	Flow Rate (gpm)
40.0	80.0	80.00	8.00	12.50			

Interval ROP (ft/hr)	Total ROP (ft/hr)	RPM (rpm)	Motor RPM (rpm)
5.0	6.4		

Drilling String Weight (1000lbf)	Pick-Up String Weight (1000lbf)	Slack-Off String Weight (1000lbf)	Drilling Torque	Off Bottom Torque	Torque Units

Resolute

Daily Drilling Report

Well Name: A414X Aneth Unit
Report Date: 8/29/2013, Report # 7

Depth Start:	**610.0**
Depth End:	**1,720.0**
Depth Progress:	**1,110.00**
Daily Cost:	**67,411.00**
Cum Cost:	**192,351.00**

Bottom Hole Assembly

Item Des	OD (in)	ID (in)	Grade	Mass/Len (lb/ft)	Len (ft)	Jts	Make	Model	Connections
Core Barrel	20	19.750			80.00	1			

BHA #	Bit Run	Drill Bit	Serial Number	Date/Time In	Depth In (ftKB)	IADC Bit Dull	Nozzles (1/32")	Rot ROP (ft/hr)
2					80.0	-------		58.6

Start Depth (ftKB)	End Depth (ftKB)	Cum Depth Drilled (ft)	Drilling Time (hr)	Cum Drilling Time (hr)	TFA (incl Noz) (in²)	Weight on Bit (1000lbf)	Flow Rate (gpm)
610.0	1,720.0	1,640.00	21.00	28.00		19	530

Interval ROP (ft/hr)	Total ROP (ft/hr)	RPM (rpm)	Motor RPM (rpm)
52.9	58.6	90	

Drilling String Weight (1000lbf)	Pick-Up String Weight (1000lbf)	Slack-Off String Weight (1000lbf)	Drilling Torque	Off Bottom Torque	Torque Units
54			4,450.0		Ftlbs

Bottom Hole Assembly

Item Des	OD (in)	ID (in)	Grade	Mass/Len (lb/ft)	Len (ft)	Jts	Make	Model	Connections
Bit Sub					3.48	1			
Shock Sub					13.55	1			
Drill Collar	8	2.250		157.24	30.62	1			
Drill Collar	8	2.250		157.24	34.48	1			
XO Sub					1.98	1			
Drill Collar	6 1/4	2.500		87.36	353.43	12			
XO Sub					1.25	1			
Drill Pipe	4	3.340	S135	14.00	1,281.74	40			

Last Casing String

Csg Des	Set Depth (ftKB)	Run Date/Time	OD (in)	Wt/Len (lb/ft)	Grade
Conductor	80.0	8/23/2013	16	75.00	J-55

Survey Information

MD (ftKB)	Incl (°)	Azm (°)	TVD (ftKB)	NS (ft)	EW (ft)	VS (ft)	DLS (°/100ft)	Date

Safety Incidents

Date	Category	Type	Sub Type
8/29/2013	Non-Recordable	Incident	Struck By

Severity	Lost time?	Cause	Comment
First Aid	No	Human	While TOOH to stand back 4" DP derrick employee unlatched pipe from Elevators had rope around pipe to pull back. Drill came down to fast and top drive hit top of pipe bowed it and it swung back and hit employee on right side of forehead,

Daily Costs

Cost Des	AcctCode	Field Est (Cost)	Vendor	Note
Drilling Rig	8170.615	15,000.00	AZTEC WELL SERVICING CO INC	Day Rate for Drilling rig
Professional Service-Consultants	8170.515	2,200.00		Consultant Fee
Professional Service-Consultants	8170.515	500.00	MOMENTUM DRILLING FLUIDS LLC	Mudman Consultant
Contract Field Labor	8170.630	1,500.00	ZEECO INC	Rental of close loop, gas buster & flare stack
Rental Equipment & Tools	8170.605	2,500.00		Rental of rotating head, 13-5/8" bowl assy
Rental Equipment & Tools	8170.605	3,200.00	HIGH TECH TOOLS, INC	Rental of 13" annular
Fuel & Power	8170.545	15,330.00	FRALEY _ COMPANY INC	deliver of diesel fuel
Transportation & Trucking	8170.600	731.00	DOUBLE S HOT SHOT	Haul mud chemicals
Transportation & Trucking	8170.600	300.00	DOUBLE S HOT SHOT	Haul mud chemicals
Contract Field Labor	8170.630	852.00	ABC FIRE _ SAFETY, LLC	Hot Work Permit
Contract Field Labor	8170.630	1,234.00	ABC FIRE _ SAFETY, LLC	Hot Work Permit
Contract Field Labor	8170.630	1,100.00	HIGH DESERT INDUSTRIAL	Weld flow line
Transportation & Trucking	8170.600	525.00	DOUBLE S HOT SHOT	Haul mud chemicals
Downhole Drilling Tools	8160.670	16,662.00	NATIONAL OILWELL VARCO CORP	12-1/4" tricone bit

Resolute

Daily Drilling Report

Well Name: A414X Aneth Unit
Report Date: 8/29/2013, Report # 7

Depth Start:	**610.0**
Depth End:	**1,720.0**
Depth Progress:	**1,110.00**
Daily Cost:	**67,411.00**
Cum Cost:	**192,351.00**

Daily Costs

Cost Des	AcctCode	Field Est (Cost)	Vendor	Note
Transportation & Trucking	8170.600	731.00	DOUBLE S HOT SHOT	Haul mud chemicals
Rental Equipment & Tools	8170.605	200.00	RAIN FOR RENT	Rental of lay down tank
Transportation & Trucking	8170.600	1,023.00	DOUBLE S HOT SHOT	Haul 9-5/8" casing
Transportation & Trucking	8170.600	1,023.00	DOUBLE S HOT SHOT	Haul 9-5/8" casing
Rental Equipment & Tools	8170.605	1,100.00	K AND C TRANSPORT LLC	Living quarter rentals
Rental Equipment & Tools	8170.605	200.00	TRI ENERGY SERVICES, INC	Rental of grey water tanks, cleaning and water delivery
Rental Equipment & Tools	8170.605	1,500.00	M_R TRUCKING, INC	Rental of roll bins for close loop

FEDERAL APPROVAL OF THIS ACTION IS NECESSARY

FORM 9

STATE OF UTAH
DEPARTMENT OF NATURAL RESOURCES
DIVISION OF OIL, GAS, AND MINING

5.LEASE DESIGNATION AND SERIAL NUMBER: UTSL 070968

SUNDRY NOTICES AND REPORTS ON WELLS

Do not use this form for proposals to drill new wells, significantly deepen existing wells below current bottom-hole depth, reenter plugged wells, or to drill horizontal laterals. Use APPLICATION FOR PERMIT TO DRILL form for such proposals.

6. IF INDIAN, ALLOTTEE OR TRIBE NAME:

7.UNIT or CA AGREEMENT NAME: ANETH

1. TYPE OF WELL Water Injection Well

8. WELL NAME and NUMBER: Aneth A-414X

2. NAME OF OPERATOR: RESOLUTE NATURAL RESOURCES

9. API NUMBER: 43037500380000

3. ADDRESS OF OPERATOR: 1675 Boradway Ste 1950 , Denver, CO, 80202

PHONE NUMBER: 303 534-4600 Ext

9. FIELD and POOL or WILDCAT: GREATER ANETH

4. LOCATION OF WELL
FOOTAGES AT SURFACE: 0788 FSL 0818 FWL
QTR/QTR, SECTION, TOWNSHIP, RANGE, MERIDIAN: Qtr/Qtr: SWSW Section: 14 Township: 40.0S Range: 23.0E Meridian: S

COUNTY: SAN JUAN

STATE: UTAH

11. CHECK APPROPRIATE BOXES TO INDICATE NATURE OF NOTICE, REPORT, OR OTHER DATA

TYPE OF SUBMISSION	TYPE OF ACTION		
✓ NOTICE OF INTENT Approximate date work will start: 12/28/2013	☐ ACIDIZE	☐ ALTER CASING	☐ CASING REPAIR
	✓ CHANGE TO PREVIOUS PLANS	☐ CHANGE TUBING	☐ CHANGE WELL NAME
	☐ CHANGE WELL STATUS	☐ COMMINGLE PRODUCING FORMATIONS	☐ CONVERT WELL TYPE
☐ SUBSEQUENT REPORT Date of Work Completion:	☐ DEEPEN	☐ FRACTURE TREAT	☐ NEW CONSTRUCTION
	☐ OPERATOR CHANGE	☐ PLUG AND ABANDON	☐ PLUG BACK
	☐ PRODUCTION START OR RESUME	☐ RECLAMATION OF WELL SITE	☐ RECOMPLETE DIFFERENT FORMATION
☐ SPUD REPORT Date of Spud:	☐ REPERFORATE CURRENT FORMATION	☐ SIDETRACK TO REPAIR WELL	☐ TEMPORARY ABANDON
	☐ TUBING REPAIR	☐ VENT OR FLARE	☐ WATER DISPOSAL
☐ DRILLING REPORT Report Date:	☐ WATER SHUTOFF	☐ SI TA STATUS EXTENSION	☐ APD EXTENSION
	☐ WILDCAT WELL DETERMINATION	☐ OTHER	OTHER:

12. DESCRIBE PROPOSED OR COMPLETED OPERATIONS. Clearly show all pertinent details including dates, depths, volumes, etc.

Resolute proposes to amend the casing and cementing program submitted with the original permit for the subject well. Attached are amended program details.

Accepted by the Utah Division of Oil, Gas and Mining

Date: September 23, 2013

By: Dark K Quist

NAME (PLEASE PRINT)	PHONE NUMBER	TITLE
Sherry Glass	303 573-4886	Sr Regulatory Technician

SIGNATURE	DATE
N/A	7/31/2013

RECEIVED: Jul. 31, 2013

AU 414X Casing Change Sundry Information

Depth	Hole Diameter	Casing Diameter	Casing Weight,Grade,Condition	♦Safety Factor (Sf_B, Sf_C, Sf_T)	Cement
Conductor Pipe 0' – 90' TVD	20"	16"	65 ppf H-40 (drift: 15.06") Properties: Collapse: 670 psi Burst: 1,640 psi Body Yield: 736,000 lbs		Ready Mix Cement Back to Surface
Surface Casing 0' – 1,677'TVD	12-1/4"	9-5/8"	36 ppf J-55 STC R3 New (drift: 8.765") Properties: Collapse: 2,020 psi Burst: 3,520 psi Jt. Strength: 639,000 lbs Body Yield: 564,000 lbs	Sf_C – 2.8 Sf_B – 2.2 Sf_T – 11.0	(**Cement back to Surface**)* **Lead: ~ 400 sx** Halliburton Light Premium yield: 1.97 ft^3/sx wt: 12.3-ppg **Tail: ~100 sx** Premium Class G Cement yield: 1.15 ft^3/sx wt: 15.8-ppg
Production Casing 0' – 5,614'TVD	8-3/4"	7.0"	26 ppf J-55 LTC R3 New (drift: 6.151") Properties Collapse: 4,320 psi Burst: 4,980 psi Jt. Strength: 490,000 lbs Body Yield: 415,000 lbs	Sf_C - 1.6 Sf_B - 1.78 Sf_T – 3.0	(**Cement back to Surface**)* **First Stage Lead: ~ 260 sx** Halliburton Light Class G Premium yield: 1.95 ft3/sx mix fluid: 10.04 gal/sx wt: 12.3-ppg **Second Stage Tail: ~100sx** Halliburton Light Premium Class G yield: 1.15 ft3/sx mix fluid: 4.96 gal/sx wt: 15.80 ppg DV Tool @ 6,500' TVD
OH Section 5,614' – 5,797'	6-1/8"				

RECEIVED: Jul. 31, 2013

FORM 9

STATE OF UTAH
DEPARTMENT OF NATURAL RESOURCES
DIVISION OF OIL, GAS, AND MINING

5.LEASE DESIGNATION AND SERIAL NUMBER: UTSL 070968

SUNDRY NOTICES AND REPORTS ON WELLS

Do not use this form for proposals to drill new wells, significantly deepen existing wells below current bottom-hole depth, reenter plugged wells, or to drill horizontal laterals. Use APPLICATION FOR PERMIT TO DRILL form for such proposals.

6. IF INDIAN, ALLOTTEE OR TRIBE NAME:

7.UNIT or CA AGREEMENT NAME: ANETH

1. TYPE OF WELL Water Injection Well

8. WELL NAME and NUMBER: Aneth A-414X

2. NAME OF OPERATOR: RESOLUTE NATURAL RESOURCES

9. API NUMBER: 43037500380000

3. ADDRESS OF OPERATOR: 1675 Boradway Ste 1950 , Denver, CO, 80202

PHONE NUMBER: 303 534-4600 Ext

9. FIELD and POOL or WILDCAT: GREATER ANETH

4. LOCATION OF WELL
FOOTAGES AT SURFACE: 0788 FSL 0818 FWL
QTR/QTR, SECTION, TOWNSHIP, RANGE, MERIDIAN: Qtr/Qtr: SWSW Section: 14 Township: 40.0S Range: 23.0E Meridian: S

COUNTY: SAN JUAN

STATE: UTAH

11. CHECK APPROPRIATE BOXES TO INDICATE NATURE OF NOTICE, REPORT, OR OTHER DATA

TYPE OF SUBMISSION	TYPE OF ACTION		
☐ NOTICE OF INTENT Approximate date work will start:	☐ ACIDIZE	☐ ALTER CASING	☐ CASING REPAIR
	☐ CHANGE TO PREVIOUS PLANS	☐ CHANGE TUBING	☐ CHANGE WELL NAME
☐ SUBSEQUENT REPORT Date of Work Completion:	☐ CHANGE WELL STATUS	☐ COMMINGLE PRODUCING FORMATIONS	☐ CONVERT WELL TYPE
	☐ DEEPEN	☐ FRACTURE TREAT	☐ NEW CONSTRUCTION
	☐ OPERATOR CHANGE	☐ PLUG AND ABANDON	☐ PLUG BACK
☐ SPUD REPORT Date of Spud:	☐ PRODUCTION START OR RESUME	☐ RECLAMATION OF WELL SITE	☐ RECOMPLETE DIFFERENT FORMATION
	☐ REPERFORATE CURRENT FORMATION	☐ SIDETRACK TO REPAIR WELL	☐ TEMPORARY ABANDON
	☐ TUBING REPAIR	☐ VENT OR FLARE	☐ WATER DISPOSAL
✓ DRILLING REPORT Report Date: 9/6/2013	☐ WATER SHUTOFF	☐ SI TA STATUS EXTENSION	☐ APD EXTENSION
	☐ WILDCAT WELL DETERMINATION	☐ OTHER	OTHER:

12. DESCRIBE PROPOSED OR COMPLETED OPERATIONS. Clearly show all pertinent details including dates, depths, volumes, etc.

Resolute spud this well on 8-22-13, currently running open hole logs to run 7" casing. Drilling report is attached.

Accepted by the Utah Division of Oil, Gas and Mining
FOR RECORD ONLY
October 02, 2013

NAME (PLEASE PRINT)	PHONE NUMBER	TITLE
Sherry Glass	303 573-4886	Sr Regulatory Technician

SIGNATURE	DATE
N/A	9/6/2013

RECEIVED: Sep. 06, 2013

RESOLUTE NATURAL RESOURCES

Daily Activity Summary

Well Name: A414X Aneth Unit

API Number	Section	Township	Range	Field Name	County	State/Province
4303750038	14	40S	23E	Aneth	San Juan	Utah

Ground Elevation (ft)	Casing Flange Elevation (ft)	KB-Ground Distance (ft)	KB-Casing Flange Distance (ft)	Regulatory Spud Date	Rig Release Date/Time
				8/28/2013 06:00	

Job Category	Primary Job Type	Secondary Job Type
Drilling & Completion	Drilling & Completion original	
Start Date	**End Date**	**Total AFE Amount (Cost)**
8/22/2013		2,043,293.00

Objective

The proposed A-414X location is a 40-acre injection offset to the B-414 producer, and 80-acre offset to the B-314 and B-123 injectors to the north and south of the B-414. It lies a quarter mile west of the B-414. Structurally, the A-414X is downdip from the B-414. This places the DC-I above the -960 oil-water contact (OWC), and most of the DC-II below the OWC at the proposed location.

.

Contractor	Rig Number	Rig on Report Date	Rig off report date
Peter Martin Rathole Drilling	1	8/22/2013	8/23/2013
Aztec Well Service	920	8/24/2013	

Report Number	Start Date	End Date	Summary
1	8/22/2013	8/22/2013	Drilling 20" conductor hole section. F/0' T/ 40'
2	8/23/2013	8/23/2013	Drilling 20" conductor hole section. F/40' T/ 80', Set 16" conductor and cement. Rig Realesed on 8/23/2013 @ 17:00
3	8/24/2013	8/24/2013	Spotting in Aztec Rig 920 on location.
4	8/25/2013	8/25/2013	Rig up rig derrick and draw works.
5	8/26/2013	8/27/2013	Spool up drilling line and drum, fix top drive hoses, Waiting on weather to clear so we can get last pieces of rig into location, last of loads that came from Vernal.
6	8/27/2013	8/28/2013	Rigging up, Nipple up, M/U BHA, P/U BHA, TIH, Drill F/80' T/ 610'
7	8/28/2013	8/29/2013	Drilling 12-1/4" surface hole section F/610' T/1720'. Circulate condition hole, short trip, condition circulate hole, check for fill, TOOH.
8	8/29/2013	8/30/2013	Circulating, Short trip to bottom, TOOH, Run 9-5/8" Casing, Cement, Nipple down.
9	8/30/2013	8/31/2013	Cut 9-5/8" casing & Weld on 11" 3K X 9-5/8" SOW casing head, Nipple up 11" 3K BOPE Choke manifold, Clean pits, haul in 500 BBLS PDS mud and put in mud pits, Pressure test BOPE, cut and weld 8" fowline,
10	8/31/2013	9/1/2013	Fabricating 8" Flow line, M/U BHA, TIH W8-3/4" BHA, Drill cement & 9-5/8" float equipment, FIT, Drill 8-3/4" hole section.F/1720' T/2550' NOTE: FIT pumped 1BBL Fluid 190PSI, held steady for 3 min.
11	9/1/2013	9/2/2013	Drilling 8-3/4" intermediate hole section, F/2550' T/3990', Rig service.
12	9/2/2013	9/3/2013	Drilling 8-3/4" intermediate hole section F/3990' T/4908', Rig service. Last Survey: MD 4816' INCL .60 AZ 63.90
13	9/3/2013	9/4/2013	Drilling 8-3/4" intermediate hole section, F/4908' T/5570' Rig service. Last Survey: MD 5488' Incl 1.20 AZ 72.20 NOTE: Drilling has slowed down because of having to slide to keep hole from getting to deviated.
14	9/4/2013	9/5/2013	Drilling 8-3/4" intermediate hole section F/5570' T/5617', rig service. Circulate condition hole, Short trip to 1700', TIH check for fill, TOOH standing back, open-hole log, Last Survey: TD @ 5617' projected at bit INCL 1.00 AZ 96.50.
15	9/5/2013	9/6/2013	Open hole log, TIH, Clean out run, Circulate cindition hole and drilling mud, TOOh lay down 6-1/4" DC, Run 7" Casing,
16	9/6/2013	9/7/2013	Open hole log, TIH, Clean out run, Circulate cindition hole and drilling mud, TOOh lay down 6-1/4" DC, Run 7" Casing,

RECEIVED: Sep. 06, 2013

STATE OF UTAH
DEPARTMENT OF NATURAL RESOURCES
DIVISION OF OIL, GAS, AND MINING

FORM 9

5.LEASE DESIGNATION AND SERIAL NUMBER: UTSL 070968

SUNDRY NOTICES AND REPORTS ON WELLS

Do not use this form for proposals to drill new wells, significantly deepen existing wells below current bottom-hole depth, reenter plugged wells, or to drill horizontal laterals. Use APPLICATION FOR PERMIT TO DRILL form for such proposals.

6. IF INDIAN, ALLOTTEE OR TRIBE NAME:

7.UNIT or CA AGREEMENT NAME: ANETH

1. TYPE OF WELL Water Injection Well

8. WELL NAME and NUMBER: Aneth A-414X

2. NAME OF OPERATOR: RESOLUTE NATURAL RESOURCES

9. API NUMBER: 43037500380000

3. ADDRESS OF OPERATOR: 1675 Boradway Ste 1950 , Denver, CO, 80202

PHONE NUMBER: 303 534-4600 Ext

9. FIELD and POOL or WILDCAT: GREATER ANETH

4. LOCATION OF WELL
FOOTAGES AT SURFACE: 0788 FSL 0818 FWL
QTR/QTR, SECTION, TOWNSHIP, RANGE, MERIDIAN: Qtr/Qtr: SWSW Section: 14 Township: 40.0S Range: 23.0E Meridian: S

COUNTY: SAN JUAN

STATE: UTAH

11. CHECK APPROPRIATE BOXES TO INDICATE NATURE OF NOTICE, REPORT, OR OTHER DATA

TYPE OF SUBMISSION

- ☐ NOTICE OF INTENT — Approximate date work will start:
- ✓ SUBSEQUENT REPORT — Date of Work Completion: 12/7/2013
- ☐ SPUD REPORT — Date of Spud:
- ☐ DRILLING REPORT — Report Date:

TYPE OF ACTION

☐ ACIDIZE	☐ ALTER CASING	☐ CASING REPAIR
☐ CHANGE TO PREVIOUS PLANS	☐ CHANGE TUBING	☐ CHANGE WELL NAME
☐ CHANGE WELL STATUS	☐ COMMINGLE PRODUCING FORMATIONS	☐ CONVERT WELL TYPE
☐ DEEPEN	☐ FRACTURE TREAT	☐ NEW CONSTRUCTION
☐ OPERATOR CHANGE	☐ PLUG AND ABANDON	☐ PLUG BACK
☐ PRODUCTION START OR RESUME	☐ RECLAMATION OF WELL SITE	☐ RECOMPLETE DIFFERENT FORMATION
☐ REPERFORATE CURRENT FORMATION	☐ SIDETRACK TO REPAIR WELL	☐ TEMPORARY ABANDON
☐ TUBING REPAIR	☐ VENT OR FLARE	☐ WATER DISPOSAL
☐ WATER SHUTOFF	☐ SI TA STATUS EXTENSION	☐ APD EXTENSION
☐ WILDCAT WELL DETERMINATION	✓ OTHER	OTHER: began injecting

12. DESCRIBE PROPOSED OR COMPLETED OPERATIONS. Clearly show all pertinent details including dates, depths, volumes, etc.

Resolute completed connections after drilling and began injection in the subject well on 12-7-13. The completion report was submitted 12-18-13.

Accepted by the Utah Division of Oil, Gas and Mining
FOR RECORD ONLY
December 23, 2013

NAME (PLEASE PRINT)	PHONE NUMBER	TITLE
Sherry Glass	303 573-4886	Sr Regulatory Technician

SIGNATURE	DATE
N/A	12/18/2013

RECEIVED: Dec. 18, 2013

API Well Number: 43037500380000

STATE OF UTAH
DEPARTMENT OF NATURAL RESOURCES
DIVISION OF OIL, GAS AND MINING

AMENDED REPORT ☑ (highlight changes) FORM 8

WELL COMPLETION OR RECOMPLETION REPORT AND LOG

5. LEASE DESIGNATION AND SERIAL NUMBER: UTSL070968
6. IF INDIAN, ALLOTTEE OR TRIBE NAME:
7. UNIT or CA AGREEMENT NAME: UTSL070968
8. WELL NAME and NUMBER: Aneth A414X
9. API NUMBER: 4303750038
10. FIELD AND POOL, OR WILDCAT: Greater Aneth

1a. TYPE OF WELL: OIL WELL ☐ GAS WELL ☐ DRY ☐ OTHER injection

b. TYPE OF WORK: NEW WELL ☑ HORIZ. LATS. ☐ DEEP-EN ☐ RE-ENTRY ☐ DIFF. RESVR. ☐ OTHER

2. NAME OF OPERATOR: Resolute Aneth LLC

3. ADDRESS OF OPERATOR: 1675 Broadway, Ste 1950 CITY Denver STATE CO ZIP 80202 PHONE NUMBER: (303) 573-4886

4. LOCATION OF WELL (FOOTAGES)
AT SURFACE: 788' FSL, 818' FWL
AT TOP PRODUCING INTERVAL REPORTED BELOW: 788' FSL, 818' FWL
AT TOTAL DEPTH: 788' FSL, 818' FWL

11. QTR/QTR, SECTION, TOWNSHIP, RANGE, MERIDIAN: SWSW 14 40S 23E S
12. COUNTY: San Juan
13. STATE: UTAH

14. DATE SPUDDED: 8/22/2013
15. DATE T.D. REACHED: 9/4/2013
16. DATE COMPLETED: 12/9/2013 ABANDONED ☐ READY TO PRODUCE ☐
17. ELEVATIONS (DF, RKB, RT, GL): 4756

18. TOTAL DEPTH MD 5,617 TVD 5,617
19. PLUG BACK T.D.: MD TVD
20. IF MULTIPLE COMPLETIONS, HOW MANY? *
21. DEPTH BRIDGE PLUG SET: MD TVD

22. TYPE ELECTRIC AND OTHER MECHANICAL LOGS RUN (Submit copy of each)
CBL and casing inspection logs

23.
WAS WELL CORED? NO ☑ YES ☐ (Submit analysis)
WAS DST RUN? NO ☑ YES ☐ (Submit report)
DIRECTIONAL SURVEY? NO ☑ YES ☐ (Submit copy)

24. CASING AND LINER RECORD (Report all strings set in well)

HOLE SIZE	SIZE/GRADE	WEIGHT (#/ft.)	TOP (MD)	BOTTOM (MD)	STAGE CEMENTER DEPTH	CEMENT TYPE & NO. OF SACKS	SLURRY VOLUME (BBL)	CEMENT TOP **	AMOUNT PULLED
20	16 J-55	75	15	80					
12 1/4	9 5/8 J-55	36	80	1,720		560		0 CIR	
8 3/4	7 J-55	26	15	5,617		675		0 CIR	
6 1/8 OPEN	0		0	5,836		0			

25. TUBING RECORD

SIZE	DEPTH SET (MD)	PACKER SET (MD)	SIZE	DEPTH SET (MD)	PACKER SET (MD)	SIZE	DEPTH SET (MD)	PACKER SET (MD)
2 7/8	5,507							

26. PRODUCING INTERVALS

FORMATION NAME	TOP (MD)	BOTTOM (MD)	TOP (TVD)	BOTTOM (TVD)
(A) Desert Creek IA	5,690			
(B) Desert Creek IB	5,704			
(C) Desert Creek IC	5,713			
(D) Desert Creek IIA	5,721			

27. PERFORATION RECORD

INTERVAL (Top/Bot - MD)	SIZE	NO. HOLES	PERFORATION STATUS
			Open ☐ Squeezed ☐
			Open ☐ Squeezed ☐
			Open ☐ Squeezed ☐
			Open ☐ Squeezed ☐

28. ACID, FRACTURE, TREATMENT, CEMENT SQUEEZE, ETC.

DEPTH INTERVAL	AMOUNT AND TYPE OF MATERIAL
5688 to TD	40 bbls caustic, 319 bbls FW, 95 bbls 20% HCl

29. ENCLOSED ATTACHMENTS:
☐ ELECTRICAL/MECHANICAL LOGS ☐ GEOLOGIC REPORT ☐ DST REPORT ☐ DIRECTIONAL SURVEY
☐ SUNDRY NOTICE FOR PLUGGING AND CEMENT VERIFICATION ☐ CORE ANALYSIS ☑ OTHER WBD daily activity summary

30. WELL STATUS: injecting

(5/2000)

(CONTINUED ON BACK)

RECEIVED: Dec. 18, 2013

API Well Number: 43037500380000

31. INITIAL PRODUCTION

INTERVAL A (As shown in Item #26)

DATE FIRST PRODUCED:		TEST DATE:		HOURS TESTED:		TEST PRODUCTION RATES: →	OIL – BBL:	GAS – MCF:	WATER – BBL:	PROD. METHOD:
CHOKE SIZE:	TBG. PRESS.	CSG. PRESS.	API GRAVITY	BTU – GAS	GAS/OIL RATIO	24 HR PRODUCTION RATES: →	OIL – BBL:	GAS – MCF:	WATER – BBL:	INTERVAL STATUS:

INTERVAL B (As shown in Item #26)

DATE FIRST PRODUCED:		TEST DATE:		HOURS TESTED:		TEST PRODUCTION RATES: →	OIL – BBL:	GAS – MCF:	WATER – BBL:	PROD. METHOD:
CHOKE SIZE:	TBG. PRESS.	CSG. PRESS.	API GRAVITY	BTU – GAS	GAS/OIL RATIO	24 HR PRODUCTION RATES: →	OIL – BBL:	GAS – MCF:	WATER – BBL:	INTERVAL STATUS:

INTERVAL C (As shown in Item #26)

DATE FIRST PRODUCED:		TEST DATE:		HOURS TESTED:		TEST PRODUCTION RATES: →	OIL – BBL:	GAS – MCF:	WATER – BBL:	PROD. METHOD:
CHOKE SIZE:	TBG. PRESS.	CSG. PRESS.	API GRAVITY	BTU – GAS	GAS/OIL RATIO	24 HR PRODUCTION RATES: →	OIL – BBL:	GAS – MCF:	WATER – BBL:	INTERVAL STATUS:

INTERVAL D (As shown in Item #26)

DATE FIRST PRODUCED:		TEST DATE:		HOURS TESTED:		TEST PRODUCTION RATES: →	OIL – BBL:	GAS – MCF:	WATER – BBL:	PROD. METHOD:
CHOKE SIZE:	TBG. PRESS.	CSG. PRESS.	API GRAVITY	BTU – GAS	GAS/OIL RATIO	24 HR PRODUCTION RATES: →	OIL – BBL:	GAS – MCF:	WATER – BBL:	INTERVAL STATUS:

32. DISPOSITION OF GAS (Sold, Used for Fuel, Vented, Etc.)

33. SUMMARY OF POROUS ZONES (Include Aquifers):

Show all important zones of porosity and contents thereof: Cored intervals and all drill-stem tests, including depth interval tested, cushion used, time tool open, flowing and shut-in pressures and recoveries.

Formation	Top (MD)	Bottom (MD)	Descriptions, Contents, etc.
U. Ismay	5,507		
L. Ismay	5,608		
Desert Creek IA	5,690		
Desert Creek IB	5,704		
Desert Creek IC	5,713		
Desert Creek IIA	5,721		
Desert Creek IIB	5,730		
Desert Creek IIC	5,743		
Desert Creek III	5,778		

34. FORMATION (Log) MARKERS:

Name	Top (Measured Depth)
Chinle	1,652
DeChelley	2,774
Organ Rock	2,844
Hermosa	4,674
Ismay	5,507
Hovenweep	5,600
L. Ismay	5,608
Gothic Shale	5,657
Desert Creek	5,690
Chimney Rock	5,808

35. ADDITIONAL REMARKS (Include plugging procedure)

Resolute completed this well with acid, tubing run 9-30-13, lateral line connection made 12-7-13 for injection.

36. I hereby certify that the foregoing and attached information is complete and correct as determined from all available records.

NAME (PLEASE PRINT) Sherry Glass TITLE Sr Regulatory Technician

SIGNATURE Sherry Glass DATE 1/15/2014

This report must be submitted within 30 days of

- completing or plugging a new well
- drilling horizontal laterals from an existing well bore
- recompleting to a different producing formation
- reentering a previously plugged and abandoned well
- significantly deepening an existing well bore below the previous bottom-hole depth
- drilling hydrocarbon exploratory holes, such as core samples and stratigraphic tests

* ITEM 20: Show the number of completions if production is measured separately from two or more formations.

** ITEM 24: Cement Top – Show how reported top(s) of cement were determined (circulated (CIR), calculated (CAL), cement bond log (CBL), temperature survey (TS)).

Send to: Utah Division of Oil, Gas and Mining
1594 West North Temple, Suite 1210
Box 145801
Salt Lake City, Utah 84114-5801

Phone: 801-538-5340

Fax: 801-359-3940

(5/2000)

RECEIVED: Dec. 18, 2013

Schemtaic & Summary

Resolute

Well Name: A414X Aneth Unit

Well Information

API Number	Enertia ID#	Field Name	Original KB Elevation (ft)	Ground Elevation (ft)	KB-Grd (ft)
4303750038	1929.01	Aneth	4,771.00	4,756.00	15.00

Asset Group	County	State/Province	Qtr/Qtr	North/South Distance (ft)	North/South Reference	East/West Distance (ft)	East/West Reference
Greater Aneth	San Juan	Utah	SW SW	788.0	FSL	818.0	FWL

Latitude (°)	Longitude (°)	Section	Township	Block	Range
37° 18' 15.696" N	109° 21' 52.776" E	14	40S		23E

Permit Approval Date	Regulatory Spud Date	Total Depth Date	Rig Release Date/Time	First Production Date	Abandon Date/Time
10/22/2012	8/28/2013	9/9/2013	9/10/2013	10/22/2013	

Vertical - Original Hole, 12/18/2013 11:07:15 AM

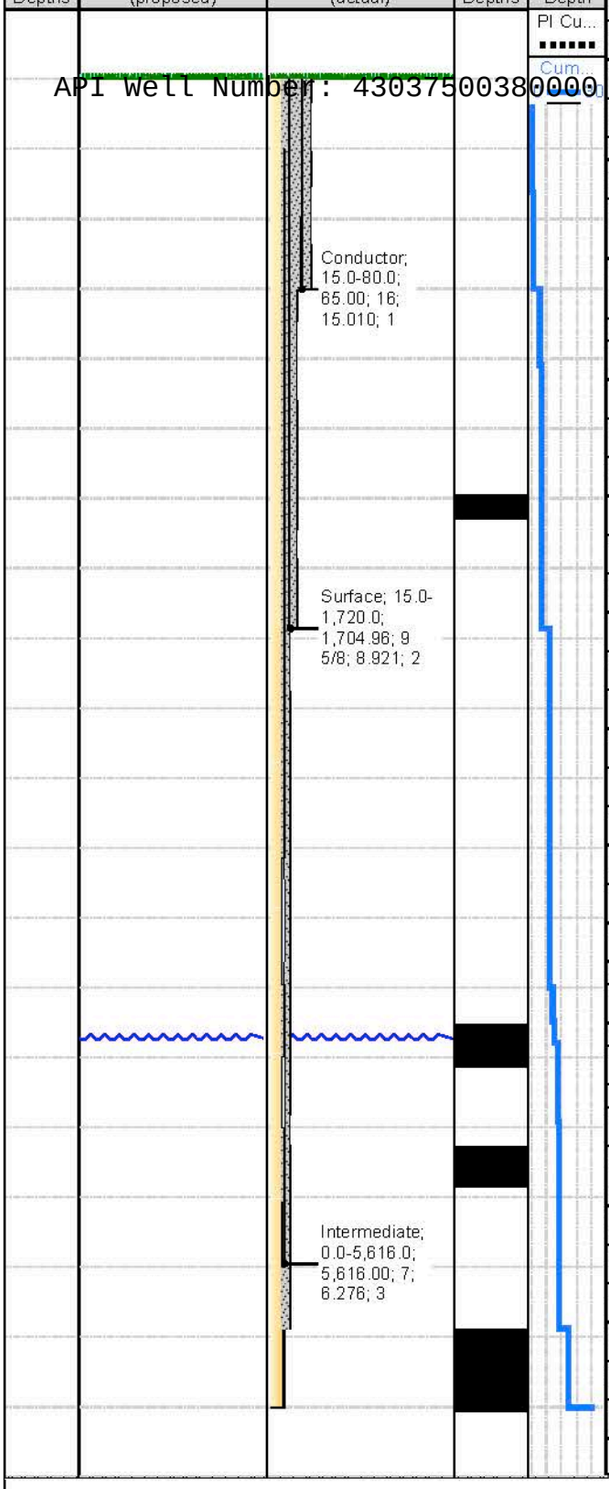

Wellbore Information

Original Hole

Start Depth (ftKB)	Total Depth (ftKB)	Kick Off Depth (ftKB)	Kick Off Method
15.0	5,836.00		

Section Description	Size (in)	Act Top (ftKB)	Act Btm (ftKB)
Conductor	20	15.0	80.0
Surface	12 1/4	80.0	1,720.0
Intermediate	8 3/4	1,720.0	5,617.0
Openhole	6 1/8	5,617.0	5,836.0

Casing Information

Casing Description	Set De...	Run Date/Time	OD (in)	ID (in)	Wt/Len...	String Grade	Top Thread
Conductor	80.0	8/23/2013	16	15.124	75.00	J-55	
Surface	1,720.0	8/29/2013	9 5/8	8.921	36.00	J-55	
Intermediate	5,616.0	9/6/2013	7	6.276	26.00	J-55	

Cement Information

Description	Top Depth (ftKB)	Bottom Depth (ftKB)	Fluid Type	Amount (sacks)
Conductor Cement	15.0	80.0		
Surface Casing Cement	15.0	1,720.0		
Intermediate Casing Cement	500.0	5,617.0		
	15.0	5,617.0		
	2,525.0	2,525.0		
Cement Plug	2,389.0	2,538.0		40

Perforations Information

Date	Top (ftKB)	Btm (ftKB)	Zone	Entered Shot...	Current Status

Stimulations Information

Date	Type	Zone	Proppant Fr...
9/19/2013	Acidizing		

Tubing Information

Tubing Description	Set Depth (ftKB)
Tubing - Injection	5,506.9

Item Description	OD (in)	ID (in)	Wt (lb/ft)	Grade	Length (ft)
TC1A Tubing Hanger (2.5" BPV)	7 1/16	2.500			0.50
SS-Nipple	2 7/8	2.310			0.65
TK-KC Fiberline Tbg	2 7/8	2.144	6.50	J-55	32.61
TK-KC Fiberline sub	2 7/8	2.144			6.11
TK-KC Finberline sub	2 7/8	2.144			1.70
TK-KC Fiberline Tbg	2 7/8	2.144	6.50	J-55	5,436.97
NC-Nipple	2 7/8	2.310			1.10

RECEIVED: Dec. 18, 2013

Schemtaic & Summary

Resolute

Well Name: A414X Aneth Unit

Well Information

API Number	Enertia ID#	Field Name	Original KB Elevation (ft)	Ground Elevation (ft)	KB-Grd (ft)
4303750038	1929.01	Aneth	4,771.00	4,756.00	15.00

Asset Group	County	State/Province	Qtr/Qtr	North/South Distance (ft)	North/South Reference	East/West Distance (ft)	East/West Reference
Greater Aneth	San Juan	Utah	SW SW	788.0	FSL	818.0	FWL

Latitude (°)	Longitude (°)	Section	Township	Block	Range
37° 18' 15.696" N	109° 21' 52.776" E	14	40S		23E

Permit Approval Date	Regulatory Spud Date	Total Depth Date	Rig Release Date/Time	First Production Date	Abandon Date/Time
10/22/2012	8/28/2013	9/9/2013	9/10/2013	10/22/2013	

Vertical - Original Hole, 12/18/2013 11:07:15 AM

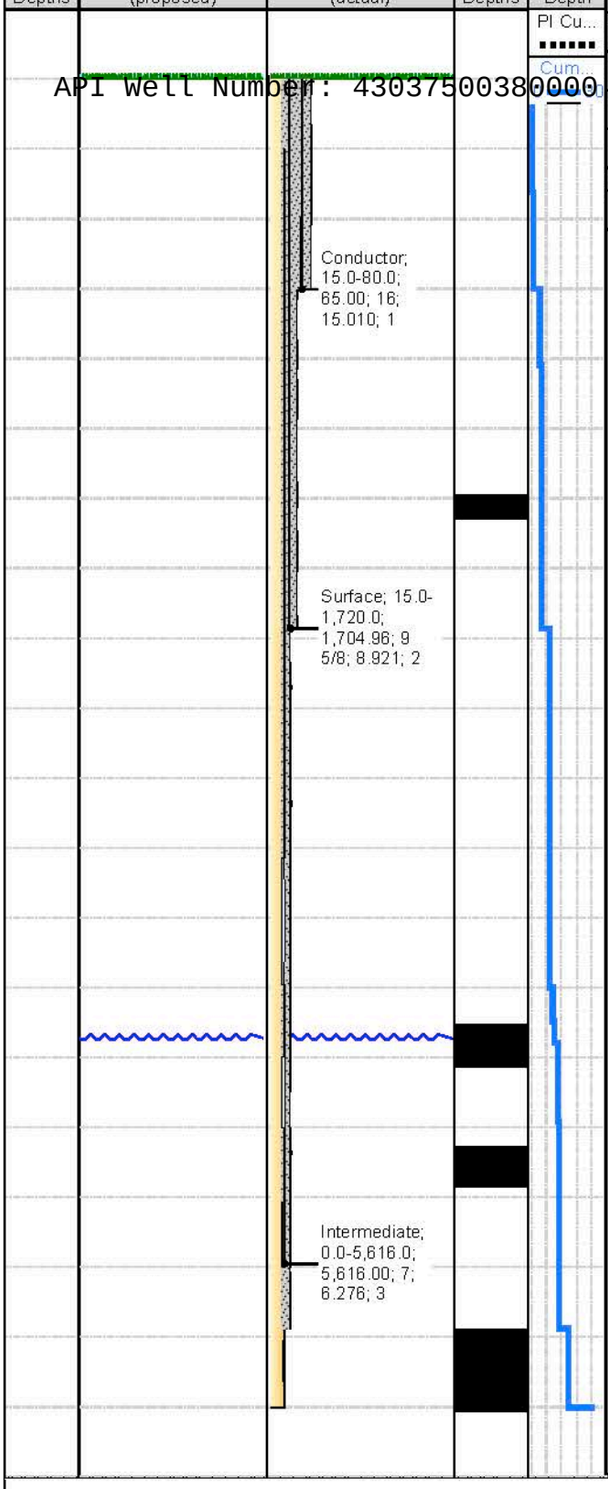

API Well Number: 4303750038 0000

Item Description	OD (in)	ID (in)	Wt (lb/ft)	Grade	Length (ft)
NC-Cross Over	3.66	2.000			0.45
NC- T2 On-Off Tool (1.81F)	5 7/8	1.810			1.70
NC-Cross Over	3 1/16	2.000			0.55
NC- Arrowset 1X Packer	6	2.500			7.40
NC-Cross Over	3.66	2.000			0.65
NC-Profile Nipple (1.78R)	3 1/16	1.780			1.05
NC-Wireline Guide	3 1/16	2.000			0.50

Rod Components

Item Description	OD (in)	Wt (lb/ft)	Grade	Length (ft)

RECEIVED: Dec. 18, 2013

API Well Number: 43037500380000

Resolute

Well Name: A414X Aneth Unit

API Number	Section	Qtr/Qtr	TWN	RGE	Block	Reg Spud Dt/Tm	Field Name	State/Prov	WI (%)
4303750038	14	SW SW	40S	23E		8/28/2013 06:00	Aneth	Utah	62.39

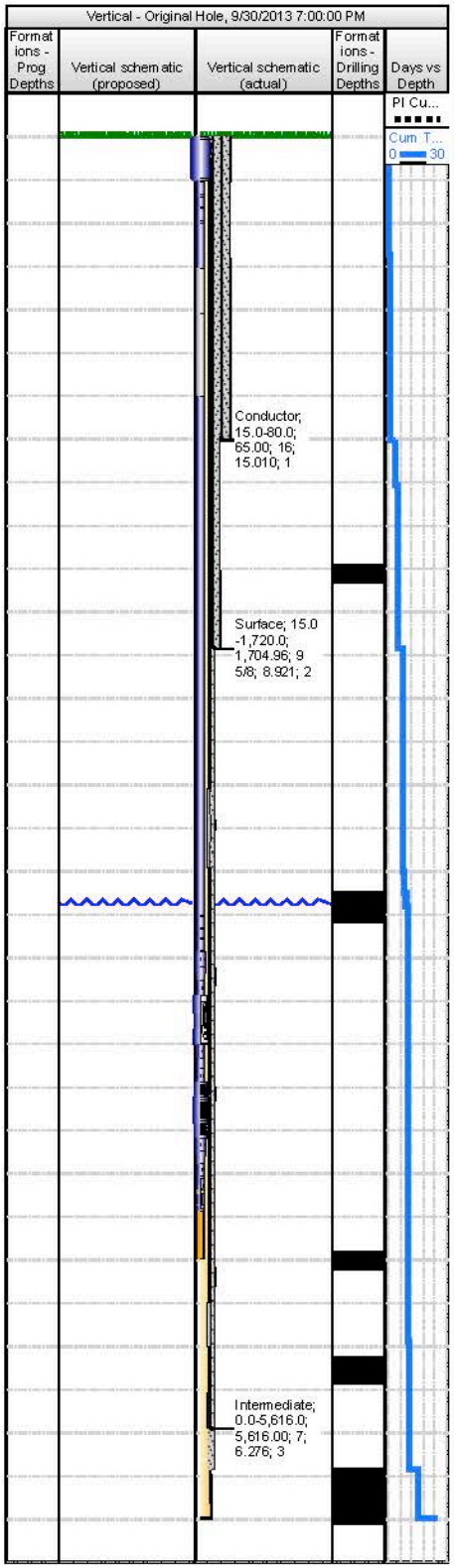

Tubing

Tubing Description	Set Depth (ftKB)	Run Date	Pull Date
Tubing - Injection	5,506.9	9/30/2013	12/6/2013

Comment

Item Des	Icon	OD (in)	Grade	Len (ft)	Top (ftKB)	Btm (ftKB)
TC1A Tubing Hanger (2.5" BPV)	Tubing Hanger 2	7 1/16		0.50	15.0	15.5
SS-Nipple	Nipple	2 7/8		0.65	15.5	16.1
TK-KC Fiberline Tbg	Tubing (blue)	2 7/8	J-55	32.61	16.1	48.7
TK-KC Fiberline sub	Tubing (grey)	2 7/8		6.11	48.7	54.8
TK-KC Finberline sub	Tubing (grey)	2 7/8		1.70	54.8	56.5
TK-KC Fiberline Tbg	Tubing (blue)	2 7/8	J-55	5,436.97	56.5	5,493.5
NC-Nipple	Nipple	2 7/8		1.10	5,493.5	5,494.6
NC-Cross Over	Swedge - reducing	3.66		0.45	5,494.6	5,495.1
NC- T2 On-Off Tool (1.81F)	On-off tool 1 - Cut Out	5 7/8		1.70	5,495.1	5,496.8
NC-Cross Over	Swedge - enlarging	3 1/16		0.55	5,496.8	5,497.3
NC- Arrowset 1X Packer	Packer Triple	6		7.40	5,497.3	5,504.7
NC-Cross Over	Swedge - reducing	3.66		0.65	5,504.7	5,505.4
NC-Profile Nipple (1.78R)	Profile nipple	3 1/16		1.05	5,505.4	5,506.4
NC-Wireline Guide	Wireline guide	3 1/16		0.50	5,506.4	5,506.9

Rod Strings

Rod Description	Set Depth (ftKB)	Run Date	Pull Date

Comment

Printed: 12/9/2013

RECEIVED: Dec. 18, 2013

Resolute

Well Name: A414X Aneth Unit

API Number	Section	Qtr/Qtr	TWN	RGE	Block	Reg Spud Dt/Tm	Field Name	State/Prov	WI (%)
4303750038	14	SW SW	40S	23E		8/28/2013 06:00	Aneth	Utah	62.39

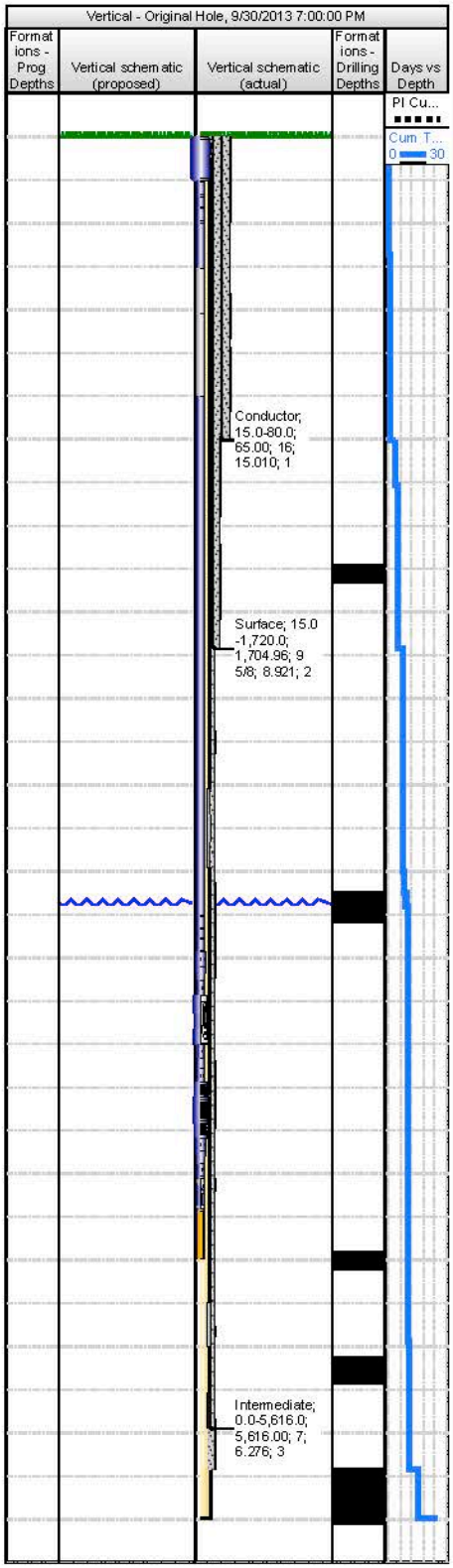

Item Des	Icon	OD (in)	Grade	Len (ft)	Max Tensile (1000lbf)	Top (ftKB)	Btm (ftKB)

Other Strings

String Description	Run Date	Set Depth (ftKB)

Other In Hole

Description	Icon	Bottom Depth (ftKB)	Run Date
Retrievable Bridge Plug	Retrievable bridge plug with Recorders	5,549.0	9/9/2013

Printed: 12/9/2013

RECEIVED: Dec. 18, 2013

API Well Number: 43037500380000

RESOLUTE NATURAL RESOURCES

Daily Activity Summary

Well Name: A414X Aneth Unit

API Number	Section	Township	Range	Field Name	County	State/Province
4303750038	14	40S	23E	Aneth	San Juan	Utah

Ground Elevation (ft)	Casing Flange Elevation (ft)	KB-Ground Distance (ft)	KB-Casing Flange Distance (ft)	Regulatory Spud Date	Rig Release Date/Time
4,756.00		15.00		8/28/2013 06:00	9/10/2013 04:00

Job Category	Primary Job Type
Drilling & Completion	Drilling & Completion original

Start Date	End Date
8/22/2013	

Objective

The proposed A-414X location is a 40-acre injection offset to the B-414 producer, and 80-acre offset to the B-314 and B-123 injectors to the north and south of the B-414. It lies a quarter mile west of the B-414. Structurally, the A-414X is downdip from the B-414. This places the DC-I above the -960 oil-water contact (OWC), and most of the DC-II below the OWC at the proposed location.

.

Contractor	Rig Number	Rig on Report Date	Rig off report date
Peter Martin Rathole Drilling	1	8/22/2013	8/23/2013
Aztec Well Service	920	8/24/2013	9/11/2013
Key	24	9/16/2013	10/1/2013
Basic Energy Services		10/22/2013	10/23/2013
TOPPS	6	12/5/2013	

Report Number	Start Date	End Date	Summary
1	8/22/2013	8/22/2013	Drilling 20" conductor hole section. F/0' T/ 40'
2	8/23/2013	8/23/2013	Drilling 20" conductor hole section. F/40' T/ 80', Set 16" conductor and cement. Rig Realesed on 8/23/2013 @ 17:00
3	8/24/2013	8/24/2013	Spotting in Aztec Rig 920 on location.
4	8/25/2013	8/25/2013	Rig up rig derrick and draw works.
5	8/26/2013	8/27/2013	Spool up drilling line and drum, fix top drive hoses, Waiting on weather to clear so we can get last pieces of rig into location, last of loads that came from Vernal.
6	8/27/2013	8/28/2013	Rigging up, Nipple up, M/U BHA, P/U BHA, TIH, Drill F/80' T/ 610'
7	8/28/2013	8/29/2013	Drilling 12-1/4" surface hole section F/610' T/1720'. Circulate condition hole, short trip, condition circulate hole, check for fill, TOOH.
8	8/29/2013	8/30/2013	Circulating, Short trip to bottom, TOOH, Run 9-5/8" Casing, Cement, Nipple down.
9	8/30/2013	8/31/2013	Cut 9-5/8" casing & Weld on 11" 3K X 9-5/8" SOW casing head, Nipple up 11" 3K BOPE Choke manifold, Clean pits, haul in 500 BBLS PDS mud and put in mud pits, Pressure test BOPE, cut and weld 8" fowline,
10	8/31/2013	9/1/2013	Fabricating 8" Flow line, M/U BHA, TIH W8-3/4" BHA, Drill cement & 9-5/8" float equipment, FIT, Drill 8-3/4" hole section.F/1720' T/2550' NOTE: FIT pumped 1BBL Fluid 190PSI, held steady for 3 min.
11	9/1/2013	9/2/2013	Drilling 8-3/4" intermediate hole section, F/2550' T/3990', Rig service.
12	9/2/2013	9/3/2013	Drilling 8-3/4" intermediate hole section F/3990' T/4908', Rig service. Last Survey: MD 4816' INCL .60 AZ 63.90
13	9/3/2013	9/4/2013	Drilling 8-3/4" intermediate hole section, F/4908' T/5570' Rig service. Last Survey: MD 5488' Incl 1.20 AZ 72.20 NOTE: Drilling has slowed down because of having to slide to keep hole from getting to deviated.
14	9/4/2013	9/5/2013	Drilling 8-3/4" intermediate hole section F/5570' T/5617', rig service. Circulate condition hole, Short trip to 1700', TIH check for fill, TOOH standing back, open-hole log, Last Survey: TD @ 5617' projected at bit INCL 1.00 AZ 96.50.
15	9/5/2013	9/6/2013	Open hole log, TIH, clean out run, Circulate condition hole and drilling mud, TOOH lay down 6-1/4" DC, Run 7" Casing,
16	9/6/2013	9/7/2013	Run 7" Casing, Cement 7" casing, Set 7" casing head & slips. N/D 11" 3M BOPE, N/U 7/16 BOPE.
17	9/7/2013	9/8/2013	N/U 7/16" 3m BOPE, Test BOPE, Rig Maint, MU 6-1/8" BHA, TIH.
18	9/8/2013	9/9/2013	TIH W/6-1/8" BHA, Drill 7" float equipment and cement, Drill 6-1/8" hole section F/5617' T/5836', Flow test, Displace hole with 11.0 lb mud. TOOH, R/U Weatherford Wireline.
19	9/9/2013	9/10/2013	Open hole log 6-1/8" hole section, R/U Blue Jet set Baker Hugh's RBP @ 2516' W/ 2 pressure bombs. Clean Pits, TOOH lay down DP, Set 7 1/16" night cap, Rig down.
20	9/10/2013	9/11/2013	Rig down, Return all Rental equipment. Release Aztec Well Service Rig # 920 on 9/11/2013 @ 06:00.
21	9/13/2013	9/13/2013	Wait on line locate to be cleared per safety coordinator, set and test 4 anchors to 25K, test ok, installed 4 markers and 4 anchor tags

Report Printed: 12/9/2013

RECEIVED: Dec. 18, 2013

API Well Number: 43037500380000

RESOLUTE NATURAL RESOURCES

Daily Activity Summary

Well Name: A414X Aneth Unit

API Number	Section	Township	Range	Field Name	County	State/Province
4303750038	14	40S	23E	Aneth	San Juan	Utah

Ground Elevation (ft)	Casing Flange Elevation (ft)	KB-Ground Distance (ft)	KB-Casing Flange Distance (ft)	Regulatory Spud Date	Rig Release Date/Time
4,756.00		15.00		8/28/2013 06:00	9/10/2013 04:00

Report Number	Start Date	End Date	Summary
22	9/16/2013	9/16/2013	MIRU WSU - no psi on well. NU BOPE, RU Blue Jet. RIH w/RadII sector log, tag RBP at 5530' (WLD), log to surface. RD Blue Jet. TIH, PU 39 jts + 10' sub, test ram/Hydril. SWI, SDFN.
23	9/17/2013	9/17/2013	Well dead LD 10' sub, POOH WS. PU retrieving head, TBIH & finish PU workstring. Latch onto RBP at 5537' KB, open DHV. Monitor well (dead). Release RBP, POOH LD RBP & BHP tools. MU 6-1/8" bit, TBIH & PU workstring. Tag up at 5688' KB (PBTD at 5836'), 148' of fill to clean out. Pull LD 5 jts (got back in csg). SWI, RU lines to frac tank - SDFN.
24	9/18/2013	9/18/2013	Well dead - PU string float, 4 jts & RU swivel w/jt 174. Break circulation, clean out from 5688' KB to 5836' KB (tbg tally match PBTD) circulate hole for 2hrs, Ralph prep caustic, pump 40 bbls caustic sweep (13 pH), circulate 190 bbls FW (shut dwn pump). Well flowing 1/2 to 1/4 bpm. RD swivel w/jt 178. LD 10 jts & string float - tbg flowing (csg on vacuum). SWI for 20 mins, well gained 320 psi. Bleed well off to a 1/2 to 1/4 bpm. Slug tbg with 2 bbls mud (15.5#). POOH LD 6-1/8" bit. PU 7" NC ArowSet 1X pkr (w/o plug). TIH set pkr element at 5500' KB - SWI, SDFN.
25	9/19/2013	9/19/2013	Tbg=220 psi, csg=0 psi - press test csg to 1000 psi for 30 mins lost 10 psi, flowed 3 bbls in 20 mins on tbg - RU BJ Hughes, pump 5 bbls at 1130 psi/1.5 bpm, jay off pkr, spot 30 bbls 20% acid holding back press (Key way leak on TIW) pump 44 bbls FW - Spot & RU Tefteller Rih set 1.81F plug 5482' SLD) change out valve, ruptured disc & fish 1.81F plug - pump remaining 65 bbls acid flush with 80 bbls FW - Shut tbg in with 68 psi - RD BJ, RU flow tee (530 psi in 30 mins) flowed 165 bbls back in 3hrs - pump 45 bbls FW dwn tbg - RU Tefteller RIH set 1.81F plug (????' SLD) test plug - SWi, SDFN
26	9/20/2013	9/20/2013	Well dead - press test csg to 1000 psi lost 20 psi, jay off circulate pkr fluid, test well bore to 1060 psi lost 50 psi, latch up to pkr, retest csg to 1040 psi 100% test - Jay off pkr, Pooh LD 2 jts, 10' sub, 165 jts & on off tool - prep NC pin x pin w/KC coupling, setup torque system - PU NC on off tool, pin x pin nipple, Tih-PU 55 jts TK-KC coupling injection tbg - SWi, SDFN
27	9/21/2013	9/21/2013	Well dead - Finish PU TK-KC injecton tbg, latch on to pkr at 5495' KB, jay off space tbg out - Land tbg w/15Kcomp - ND BOP, NU Tree - press test donut seal/tree to 2500psi test good, test csg twice up to 1000 psi (+) lost 120 psi & 110 psi, press test A-section test good, test tbg to 2100 psi lost 225 psi/15 mins, 115 psi next 15 min (340 psi/30 mins) test csg to 1040 psi lost 100 in 30 min no sign of communication on tbg, tree (bleed press off well SWi, SDFN (regruop Monday)
28	9/23/2013	9/23/2013	Pressure test casing there's still a slight leak TOH with On/Off Tool.
29	9/24/2013	9/24/2013	TIH with packer and isolated leak off at DV tool, 2510'. TIH with RBP and set at 2610'.
30	9/25/2013	9/25/2013	TIH to 2538', spot 40 sack of HES Fine Cem, Matric Cement Density 12.5, Yield .8. Pressure up to 1500 psi untill cement locked up. Total BFW pumped 30 bbls. Est cmt top @ 2,389'.
31	9/26/2013	9/26/2013	No Activity, WOC
32	9/27/2013	9/27/2013	Tih with collars and tubing. Tag cement @ 2407', drill to 2471', cement soft, circulate clean. Pull 2 jnt's. Shut down.
33	9/28/2013	9/28/2013	PU 2 jts 2 7/8" N80 tbg. Tag cmt @ 2,471'. DO cmt fr/2,471' - 2,502", cmt hard, DO 25 min. PU Jt 176, DO cmt to 2,530, fell out of cmt. PU 2 jts & tgd sand above RBP plug. Pull Up. PT csg to 1,080 psig. Wait 31 min. Csg holding @ 1,080 psig. CO sand off RBP @ 2,610'. TOOH & LD 6 jts 2 7/8" N80 tbg. ND pwr swivel. TOOH w/wrk string. LD 4 - 3 1/8" DC's & 6 1/8" 3 blade bit. PU retrieving head for 7" RBP. TIH w/78 jts of 2 7/8" N80 tbg. Latch onto RBP & rls. PT csg to 1,080 psig for 15 min - good tst. Bd press. TOOH & LD 79 jts 2 7/8" N80 & 7" RBP.
34	9/30/2013	9/30/2013	Well dead - PU NC on/off tool & KC nipple. TIH with TK-KC injection tbg. MU subs, landing jt, pin x-pin nipple & TC1A EN landing donut (prep w/2.5" BPV). Circulate pkr fluid & FW. Latch onto pkr, land tbg with 20K comp. Lock set screw, ND BOPE, NU 5K tree - test seal (tree/donut). Press test csg to 1080 psi (Braden, tbg & tree test port open), test good. Pres test tbg to 2150 psi, lost 40 psi in 15 mins (csg, tree test port open). RU Tefteller, fish 1.81F plug - SWI, SDFN.
35	10/1/2013	10/1/2013	RDMO WSU
36	10/2/2013	10/2/2013	Tbg at 830#, Csg at 0#, Braden head at 0#. Move in Well Check MIT tester, connect to csg, pump pressure to 1100#. Shut down and let Chart Record for 30 minutes - no leaks. Passed MIT test, witnessed by NNEPA Rep. Jean Bia. Disconnect from csg, move off location.
37	10/8/2013	10/8/2013	screw in pipe together that's going tie into injection well
38	10/9/2013	10/9/2013	tie into injection well and dig out trench.
39	10/22/2013	10/22/2013	SITP 260 psig. SICP 0 psig. PT well stack to 4,500 psig. RIH w/1 1/4 CT w/Basic CT nozzle to 5,837' (PBTD) w/nitrogen. Unloaded well fluid. Ppd soap sweep w/foamer. Wrk up & dwn thru open hole. Shut down to see if would unload on its own. Unloaded small amt of fluid than it would not unload on its own. Started N2 & unloaded well. POOH w/CT. SWI. SICP 720 psig. SITP 10 psig. Checked gauges. Gauges good. Attempted to BD csg. Getting back soap, (didn't seem to be pkr fluid) press, & fluid. Finally bled dwn csg to 0 psig. Held @ 0 psig. SITP 0 psig.
40	12/5/2013	12/5/2013	Move rig to location.
41	12/6/2013	12/6/2013	Rig up. Test tubing and casing. Nu bops and test. Tooh with tubing.
42	12/7/2013	12/7/2013	Finish TOOH. Make up new on/off tool, TIH. ND BOP's. Land tubing, test casing and tubing, good.

Report Printed: 12/9/2013

RECEIVED: Dec. 18, 2013

STATE OF UTAH
DEPARTMENT OF NATURAL RESOURCES
DIVISION OF OIL, GAS, AND MINING

FORM 9

5.LEASE DESIGNATION AND SERIAL NUMBER: UTSL 070968

SUNDRY NOTICES AND REPORTS ON WELLS

Do not use this form for proposals to drill new wells, significantly deepen existing wells below current bottom-hole depth, reenter plugged wells, or to drill horizontal laterals. Use APPLICATION FOR PERMIT TO DRILL form for such proposals.

6. IF INDIAN, ALLOTTEE OR TRIBE NAME:

7.UNIT or CA AGREEMENT NAME: ANETH

1. TYPE OF WELL Oil Well

8. WELL NAME and NUMBER: Aneth A-414X

2. NAME OF OPERATOR: RESOLUTE NATURAL RESOURCES

9. API NUMBER: 43037500380000

3. ADDRESS OF OPERATOR: 1700 LINCOLN STREET, SUITE 2800 , DENVER, CO, 802034535

PHONE NUMBER: 303-573-4886

9. FIELD and POOL or WILDCAT: GREATER ANETH

4. LOCATION OF WELL
FOOTAGES AT SURFACE: 788 FSL 818 FWL
QTR/QTR, SECTION, TOWNSHIP, RANGE, MERIDIAN: Qtr/Qtr: SWSW Section: 14 Township: 40S Range: 23E Meridian: S

COUNTY: SAN JUAN

STATE: UTAH

11. CHECK APPROPRIATE BOXES TO INDICATE NATURE OF NOTICE, REPORT, OR OTHER DATA

TYPE OF SUBMISSION

- ☐ NOTICE OF INTENT — Approximate date work will start:
- ✓ SUBSEQUENT REPORT — Date of Work Completion: 4/1/2017
- ☐ SPUD REPORT — Date of Spud:
- ☐ DRILLING REPORT — Report Date:

TYPE OF ACTION

☐ ACIDIZE	☐ ALTER CASING	☐ CASING REPAIR
☐ CHANGE TO PREVIOUS PLANS	☐ CHANGE TUBING	☐ CHANGE WELL NAME
☐ CHANGE WELL STATUS	☐ COMMINGLE PRODUCING FORMATIONS	✓ CONVERT WELL TYPE
☐ DEEPEN	☐ FRACTURE TREAT	☐ NEW CONSTRUCTION
☐ OPERATOR CHANGE	☐ PLUG AND ABANDON	☐ PLUG BACK
☐ PRODUCTION START OR RESUME	☐ RECLAMATION OF WELL SITE	☐ RECOMPLETE DIFFERENT FORMATION
☐ REPERFORATE CURRENT FORMATION	☐ SIDETRACK TO REPAIR WELL	☐ TEMPORARY ABANDON
☐ TUBING REPAIR	☐ VENT OR FLARE	☐ WATER DISPOSAL
☐ WATER SHUTOFF	☐ SI TA STATUS EXTENSION	☐ APD EXTENSION
☐ WILDCAT WELL DETERMINATION	☐ OTHER	OTHER:

12. DESCRIBE PROPOSED OR COMPLETED OPERATIONS. Clearly show all pertinent details including dates, depths, volumes, etc.

Resolute Natural Resources respectfully submits this sundry as notice that this well was converted from an injector to a producing oil well 4/1/2017 No well work was performed. Well is flowing through the injection packer and injection string. only surface work was performed. A surface flowline was installed from the A414x to B414 and then routed to the 13-14 Header.

Accepted by the Utah Division of Oil, Gas and Mining
FOR RECORD ONLY
September 20, 2017

NAME (PLEASE PRINT)	PHONE NUMBER	TITLE
Erin Joseph	303 573-4886	Sr. Regulatory Analyst
SIGNATURE N/A		**DATE** 7/27/2017

RECEIVED: Jul. 27, 2017

Division of Oil, Gas and Mining
Operator Change/Name Change Worksheet-for State use only

Effective Date: 1/1/2018

FORMER OPERATOR:	NEW OPERATOR:
Resolute Natural Resources 1700 Lincoln, Suite 2800 Denver, CO 80203	Elk Operating Services, LLC 1700 Lincoln, Suite 2950 Denver, CO 80203

Groups:
Aneth-Enhanced Recovery - Active
McElmo Creek - Enhanced Recovery - Active
Ratherford - Enhanced Recovery - Active

Bev

WELL INFORMATION:

Well Name	API Number	Town	Dir	Range	Dir	Sec	Entity Number	Type	Status
SEE ATTACHED LISTS									

Pages 7-21

OPERATOR CHANGES DOCUMENTATION:

1. Sundry or legal documentation was received from the **FORMER** operator on: 12/21/2018
2. Sundry or legal documentation was received from the **NEW** operator on: 12/21/2018
3. New operator Division of Corporations Business Number: 10639865-0161

REVIEW:

Receipt of Acceptance of Drilling Procedures for APD on: NA
Reports current for Production/Disposition & Sundries: 1/9/2018
OPS/SI/TA well(s) reviewed for full cost bonding: NA
UIC5 on all disposal/injection/storage well(s) approved on: 12/21/2018
Surface Facility(s) included in operator change: Aneth Gas Plant and Aneth Compressor Station

NEW OPERATOR BOND VERIFICATION:

State/fee well(s) covered by Bond Number(s): SUR033474

DATA ENTRY:

Well(s) update in the RBDMS on: 1/30/2018
Group(s) update in RDBMS on: 1/30/2018
Surface Facilities update in RBDMS on: 1/30/2018
Entities Updated in RBDMS on: 1/30/2018

COMMENTS:

This Operator Change is an Operator Name Change. All wells and facilities are going to Elk Operating Services, LLC.

1

elk petroleum

1700 LINCOLN, SUITE 2950
DENVER, CO 80203
PHONE: 303-861-6255

December 15, 2017

RECEIVED
DEC 21 2017
DIV. OF OIL, GAS & MINING

Ms. Rachel Medina
Bonding Technician
Utah Division of Oil, Gas and Mining
1594 West North Temple, Suite 1210
Box 145801
Salt Lake City, Utah 84114-5801

Dear Ms. Medina:

Effective January 1, 2018, Resolute Natural Resources Company will resign as operator of the Greater Aneth Field and Elk Operating Services, LLC (Elk) will become the designated operator. Enclosed are the required change of operator documents, by the three units located within the Greater Aneth Field: Aneth Unit, McElmo Unit, and Ratherford Unit. Each unit change of operator packet includes the following:

- A **letter requesting an operator number** for Elk Operating Services, LLC
- **Form 9 Sundry Notices and Reports on Wells** – one for Resolute Natural Resources Company and one for Elk Operating Services, LLC
- **UIC Form 5 Transfer of Authority to Inject** - signed by representatives of both organizations
- **Form 5 Designation of Agent or Operator**
- A copy of Elk Operating Services, LLC's **Waste Management Plan** - placed with the waste Management plans
- The required BIA, BLM, and DOGM bonds are being transferred from Resolute Aneth, LLC to Elk Operating Services, LLC and the bond numbers are as follows:
  - BLM Bond: SUR0033475
  - BIA Bond: SUR0033465
  - DOGM Bond: SUR033474 - Blanket, plugging, Surety Bond

Please feel free to contact Sherri Robbins at srobbins@resoluteenergy.com or 303-573-4600 ext. 1195 with any questions. Sherri will be an employee of Elk effective January 1, 2018, but until that time, she may be reached at the above mentioned email and phone number.

Sincerely,

V. Brian Dolan
Chief Operating Officer

3

STATE OF UTAH
DEPARTMENT OF NATURAL RESOURCES
DIVISION OF OIL, GAS AND MINING

FORM 9

SUNDRY NOTICES AND REPORTS ON WELLS

Do not use this form for proposals to drill new wells, significantly deepen existing wells below current bottom-hole depth, reenter plugged wells, or to drill horizontal laterals. Use APPLICATION FOR PERMIT TO DRILL form for such proposals.

5. LEASE DESIGNATION AND SERIAL NUMBER: See attached list

6. IF INDIAN, ALLOTTEE OR TRIBE NAME: Navajo Tribe

7. UNIT or CA AGREEMENT NAME: Ratherford Unit

1. TYPE OF WELL: OIL WELL ☐ GAS WELL ☐ OTHER Unit Agreement

8. WELL NAME and NUMBER: See attached list

2. NAME OF OPERATOR: Elk Operating Services, LLC

9. API NUMBER: Attached

3. ADDRESS OF OPERATOR: 1700 Lincoln, Suite 2950 CITY Denver STATE CO ZIP 80203

PHONE NUMBER: (303) 861-6255

10. FIELD AND POOL, OR WILDCAT: See attached list

4. LOCATION OF WELL

FOOTAGES AT SURFACE: See attached list

COUNTY: San Juan

QTR/QTR, SECTION, TOWNSHIP, RANGE, MERIDIAN:

STATE: UTAH

11. CHECK APPROPRIATE BOXES TO INDICATE NATURE OF NOTICE, REPORT, OR OTHER DATA

TYPE OF SUBMISSION	TYPE OF ACTION		
☐ NOTICE OF INTENT (Submit in Duplicate)	☐ ACIDIZE	☐ DEEPEN	☐ REPERFORATE CURRENT FORMATION
Approximate date work will start:	☐ ALTER CASING	☐ FRACTURE TREAT	☐ SIDETRACK TO REPAIR WELL
	☐ CASING REPAIR	☐ NEW CONSTRUCTION	☐ TEMPORARILY ABANDON
	☐ CHANGE TO PREVIOUS PLANS	☑ OPERATOR CHANGE	☐ TUBING REPAIR
	☐ CHANGE TUBING	☐ PLUG AND ABANDON	☐ VENT OR FLARE
☑ SUBSEQUENT REPORT (Submit Original Form Only)	☐ CHANGE WELL NAME	☐ PLUG BACK	☐ WATER DISPOSAL
Date of work completion:	☐ CHANGE WELL STATUS	☐ PRODUCTION (START/RESUME)	☐ WATER SHUT-OFF
1/1/2018	☐ COMMINGLE PRODUCING FORMATIONS	☐ RECLAMATION OF WELL SITE	☐ OTHER:
	☐ CONVERT WELL TYPE	☐ RECOMPLETE - DIFFERENT FORMATION	

12. DESCRIBE PROPOSED OR COMPLETED OPERATIONS. Clearly show all pertinent details including dates, depths, volumes, etc.

Effective January 1, 2018, Resolute Natural Resources resigns as operator of the Greater Aneth Field, Ratherford Unit and Elk Operating Services, LLC is the designated as successor operator of the Greater Aneth Field, Ratherford Unit.

RECEIVED DEC 21 2017 DIV. OF OIL, GAS & MINING

Current Operator:
Resolute Natural Resources
1700 Lincoln, Suite 2800
Denver, CO 80203
303-573-4886

New Operator:
Elk Operating Services, LLC
1700 Lincoln, Suite 2950
Denver, CO 80203
303-861-6255

A list of affected producing and water source wells is attached. A separate list of affected injection wells is being submitted with UIC Form 5, Transfer of Authority to Inject.

As of the effective date, Elk Operating Services, LLC's bond coverage will transfer to the following:
BLM Bond # SUR0033475
BIA Bond # SUR0033465
DOGM Bond # SUR0033474

NAME (PLEASE PRINT) Brian Dolan TITLE Chief Operating Officer

SIGNATURE V. Brian Dolan DATE 12/12/2017

(This space for State use only)

APPROVED
JAN 30 2018
DIV. OIL, GAS & MINING
BY: B Wise

(5/2000) (See Instructions on Reverse Side)

4

FORM 9

STATE OF UTAH
DEPARTMENT OF NATURAL RESOURCES
DIVISION OF OIL, GAS AND MINING

SUNDRY NOTICES AND REPORTS ON WELLS

Do not use this form for proposals to drill new wells, significantly deepen existing wells below current bottom-hole depth, reenter plugged wells, or to drill horizontal laterals. Use APPLICATION FOR PERMIT TO DRILL form for such proposals.

5. LEASE DESIGNATION AND SERIAL NUMBER: See attached list

6. IF INDIAN, ALLOTTEE OR TRIBE NAME: Navajo Tribe

7. UNIT or CA AGREEMENT NAME: McElmo Unit

8. WELL NAME and NUMBER: See attached list

9. API NUMBER: Attached

10. FIELD AND POOL, OR WILDCAT: See attached list

1. TYPE OF WELL: OIL WELL ☐ GAS WELL ☐ OTHER Unit Agreement

2. NAME OF OPERATOR: Resolute Natural Resources (N2700)

3. ADDRESS OF OPERATOR: 1700 Lincoln, Suite 2800 CITY Denver STATE CO ZIP 80203 PHONE NUMBER: (303) 573-4600

4. LOCATION OF WELL

FOOTAGES AT SURFACE: See attached list COUNTY: San Juan

QTR/QTR, SECTION, TOWNSHIP, RANGE, MERIDIAN: STATE: UTAH

11. CHECK APPROPRIATE BOXES TO INDICATE NATURE OF NOTICE, REPORT, OR OTHER DATA

TYPE OF SUBMISSION	TYPE OF ACTION		
☐ NOTICE OF INTENT (Submit in Duplicate)	☐ ACIDIZE	☐ DEEPEN	☐ REPERFORATE CURRENT FORMATION
Approximate date work will start:	☐ ALTER CASING	☐ FRACTURE TREAT	☐ SIDETRACK TO REPAIR WELL
	☐ CASING REPAIR	☐ NEW CONSTRUCTION	☐ TEMPORARILY ABANDON
	☐ CHANGE TO PREVIOUS PLANS	☑ OPERATOR CHANGE	☐ TUBING REPAIR
	☐ CHANGE TUBING	☐ PLUG AND ABANDON	☐ VENT OR FLARE
☑ SUBSEQUENT REPORT (Submit Original Form Only)	☐ CHANGE WELL NAME	☐ PLUG BACK	☐ WATER DISPOSAL
Date of work completion:	☐ CHANGE WELL STATUS	☐ PRODUCTION (START/RESUME)	☐ WATER SHUT-OFF
1/1/2018	☐ COMMINGLE PRODUCING FORMATIONS	☐ RECLAMATION OF WELL SITE	☐ OTHER:
	☐ CONVERT WELL TYPE	☐ RECOMPLETE - DIFFERENT FORMATION	

12. DESCRIBE PROPOSED OR COMPLETED OPERATIONS. Clearly show all pertinent details including dates, depths, volumes, etc.

Effective January 1, 2018, Resolute Natural Resources resigns as operator of the Greater Aneth Field, McElmo Unit and Elk Operating Services, LLC is the designated as successor operator of the Greater Aneth Field, McElmo Unit.

Current Operator:
Resolute Natural Resources
1700 Lincoln, Suite 2800
Denver, CO 80203
303-573-4886

New Operator:
Elk Operating Services, LLC
1700 Lincoln, Suite 2950
Denver, CO 80203
303-861-6255

A list of affected producing and water source wells is attached to Elk Operating Services, LLC's Change of Operator sundry notice. A separate list of affected injection wells is being submitted by Elk with the UIC Form 5, Transfer of Authority to Inject.

As of the effective date, Elk Operating Services, LLC's bond coverage will transfer to the following:
BLM Bond # SUR0033475
BIA Bond # SUR0033465
DOGM Bond # SUR0033474

NAME (PLEASE PRINT) Patrick Flynn TITLE Vice President - Governmental & Corporate Affairs

SIGNATURE DATE 12/12/2017

(This space for State use only)

APPROVED

JAN 30 2018

DIV. OIL, GAS & MINING

BY: B Wise

(5/2000) (See Instructions on Reverse Side)

6

FORM 9

STATE OF UTAH
DEPARTMENT OF NATURAL RESOURCES
DIVISION OF OIL, GAS AND MINING

SUNDRY NOTICES AND REPORTS ON WELLS

Do not use this form for proposals to drill new wells, significantly deepen existing wells below current bottom-hole depth, reenter plugged wells, or to drill horizontal laterals. Use APPLICATION FOR PERMIT TO DRILL form for such proposals.

5. LEASE DESIGNATION AND SERIAL NUMBER: See attached list

6. IF INDIAN, ALLOTTEE OR TRIBE NAME: Navajo Tribe

7. UNIT or CA AGREEMENT NAME: Aneth Unit

8. WELL NAME and NUMBER: See attached list

9. API NUMBER: Attached

10. FIELD AND POOL, OR WILDCAT: See attached list

1. TYPE OF WELL: OIL WELL ☐ GAS WELL ☐ OTHER Unit Agreement

2. NAME OF OPERATOR: Elk Operating Services, LLC

3. ADDRESS OF OPERATOR: 1700 Lincoln, Suite 2950 CITY Denver STATE CO ZIP 80203 PHONE NUMBER: (303) 861-6255

4. LOCATION OF WELL

FOOTAGES AT SURFACE: See attached list COUNTY: San Juan

QTR/QTR, SECTION, TOWNSHIP, RANGE, MERIDIAN: STATE: UTAH

11. CHECK APPROPRIATE BOXES TO INDICATE NATURE OF NOTICE, REPORT, OR OTHER DATA

TYPE OF SUBMISSION	TYPE OF ACTION		
☐ NOTICE OF INTENT (Submit in Duplicate)	☐ ACIDIZE	☐ DEEPEN	☐ REPERFORATE CURRENT FORMATION
Approximate date work will start:	☐ ALTER CASING	☐ FRACTURE TREAT	☐ SIDETRACK TO REPAIR WELL
	☐ CASING REPAIR	☐ NEW CONSTRUCTION	☐ TEMPORARILY ABANDON
	☐ CHANGE TO PREVIOUS PLANS	☑ OPERATOR CHANGE	☐ TUBING REPAIR
	☐ CHANGE TUBING	☐ PLUG AND ABANDON	☐ VENT OR FLARE
☑ SUBSEQUENT REPORT (Submit Original Form Only)	☐ CHANGE WELL NAME	☐ PLUG BACK	☐ WATER DISPOSAL
Date of work completion:	☐ CHANGE WELL STATUS	☐ PRODUCTION (START/RESUME)	☐ WATER SHUT-OFF
1/1/2018	☐ COMMINGLE PRODUCING FORMATIONS	☐ RECLAMATION OF WELL SITE	☐ OTHER:
	☐ CONVERT WELL TYPE	☐ RECOMPLETE - DIFFERENT FORMATION	

12. DESCRIBE PROPOSED OR COMPLETED OPERATIONS. Clearly show all pertinent details including dates, depths, volumes, etc.

Effective January 1, 2018, Resolute Natural Resources resigns as operator of the Greater Aneth Field, Aneth Unit and Elk Operating Services, LLC is the designated as successor operator of the Aneth Unit.

RECEIVED
DEC 21 2017
DIV. OF OIL, GAS & MINING

Current Operator:
Resolute Natural Resources
1700 Lincoln, Suite 2800
Denver, CO 80203
303-573-4886

New Operator:
Elk Operating Services, LLC
1700 Lincoln, Suite 2950
Denver, CO 80203
303-861-6255

A list of affected producing and water source wells is attached. A separate list of affected injection wells is being submitted with UIC Form 5, Transfer of Authority to Inject.

As of the effective date, Elk Operating Services, LLC's bond coverage will transfer to the following:
BLM Bond # SUR0033475
BIA Bond # SUR0033465
DOGM Bond # SUR0033474 ✓

NAME (PLEASE PRINT) Brian Dolan TITLE Chief Operating Officer

SIGNATURE V. Brian Dolan DATE 12/12/2017

(This space for State use only)

APPROVED
JAN 30 2018
DIV. OF OIL, GAS & MINING
B Wa

(5/2000) (See Instructions on Reverse Side)

6

197 ct wells.

242 RBDMS

API (10-digit)	Tract	UNIT	WELL NAME	WELL NUMBER	TWP	RNG	SEC	QTR-QTR
4303713754	12	RATHERFORD	NAVAJO A 5	21-23	41S	24E	21	NESW
4303715126	06	RATHERFORD	NAVAJO 12-9	09-12	41S	24E	09	NESWNW
4303715127	08	RATHERFORD	NAVAJO 14A-9	09-14A	41S	24E	09	SWSW
4303715336	15	RATHERFORD	NAVAJO 21	28-12	41S	24E	28	SWSWNW
4303715337	14	RATHERFORD	NAVAJO B 12	29-12	41S	24E	29	SWNW
4303715339	14	RATHERFORD	NAVAJO B 11	29-32	41S	24E	29	NESWNE
4303715340	14	RATHERFORD	NAVAJO B-20	29-34	41S	24E	29	SWSE
4303715342	14	RATHERFORD	NAVAJO B 14	30-32	41S	24E	30	NWSWNE
4303715343	14	RATHERFORD	NAVAJO B 5	30-41	41S	24E	30	CNENE
4303715711	07	RATHERFORD	NAVAJO B 3	09-34	41S	24E	09	CSWSE
4303715712	07	RATHERFORD	NAVAJO B 7	10-12	41S	24E	10	CSWNW
4303715713	07	RATHERFORD	NAVAJO B 1	10-14	41S	24E	10	SESWSW
4303715714	07	RATHERFORD	NAVAJO B 4	10-32	41S	24E	10	SWNE
4303715715	12	RATHERFORD	NAVAJO A 6	15-12	41S	24E	15	NWSWNW
4303715717	12	RATHERFORD	NAVAJO A 17	15-32	41S	24E	15	CSWNE
4303715718	12	RATHERFORD	NAVAJO A 32	15-33	41S	24E	15	NWSE
4303715719	12	RATHERFORD	NAVAJO A 15	15-41	41S	24E	15	CNENE
4303715720	12	RATHERFORD	NAVAJO A 13	16-12	41S	24E	16	N2SWNW
4303715721	12	RATHERFORD	NAVAJO A 14	16-14	41S	24E	16	CSWSW
4303715722	12	RATHERFORD	NAVAJO A 9	16-23	41S	24E	16	CNESW
4303715723	12	RATHERFORD	NAVAJO A 7	16-32	41S	24E	16	CSWNE
4303715725	12	RATHERFORD	NAVAJO A 2	16-41	41S	24E	16	CNENE
4303715726	11	RATHERFORD	DESERT A 5	17-12	41S	24E	17	W2SWNW
4303715727	11	RATHERFORD	DESERT A 28	17-14	41S	24E	17	CSWSW
4303715728	11	RATHERFORD	DESERT A 7	17-23	41S	24E	17	S2NESW
4303715729	11	RATHERFORD	DESERT A 13	17-32	41S	24E	17	NWSWNE
4303715730	11	RATHERFORD	DESERT A 25	17-34	41S	24E	17	SESWSE
4303715731	11	RATHERFORD	DESERT 12	17-41	41S	24E	17	NENENE
4303715732	11	RATHERFORD	DESERT A W-33	17-44	41S	24E	17	CSESE
4303715733	11	RATHERFORD	DESERT A 1	18-11	41S	24E	18	SENWNW
4303715734	11	RATHERFORD	DESERT A 8	18-13	41S	24E	18	W2NWSW
4303715735	11	RATHERFORD	DESERT A 11	18-14	41S	24E	18	NWSWSW
4303715736	11	RATHERFORD	DESERT-A 2	18-32	41S	24E	18	SESWNE
4303715737	11	RATHERFORD	DESERT A 14	18-34	41S	24E	18	NESWSE
4303715738	11	RATHERFORD	DESERT-A 4	18-41	41S	24E	18	CNENE
4303715739	11	RATHERFORD	DESERT A 17	19-12	41S	24E	19	SWNW
4303715741	11	RATHERFORD	DESERT A 15	19-21	41S	24E	19	W2NENW
4303715742	11	RATHERFORD	DESERT A 26	19-23	41S	24E	19	NESW
4303715743	11	RATHERFORD	DESERT A 22	19-32	41S	24E	19	CSWNE
4303715744	11	RATHERFORD	DESERT A 29	19-34	41S	24E	19	CSWSE
4303715746	11	RATHERFORD	DESERT A 21	20-12	41S	24E	20	CSWNW
4303715747	11	RATHERFORD	DESERT A 10	20-14	41S	24E	20	SWSW
4303715748	11	RATHERFORD	DESERT A 18	20-23	41S	24E	20	NESW
4303715749	11	RATHERFORD	DESERT A 30	20-32	41S	24E	20	SWNE
4303715751	11	RATHERFORD	DESERT A 27	20-41	41S	24E	20	NENE
4303715753	12	RATHERFORD	NAVAJO-A 10	21-14	41S	24E	21	W2SWSW
4303715839	01	RATHERFORD	N DESERT CREEK 24-1	01-24	41S	23E	01	S2SESW
4303715841	01	RATHERFORD	N DESERT CREEK 42-11	11-42	41S	23E	11	SWSENE
4303715842	01	RATHERFORD	RATHERFORD 44-11	11-44	41S	23E	11	E2SESE
4303715843	01	RATHERFORD	DESERT CREEK 11-12 N	12-11	41S	23E	12	S2NWNW
4303715845	01	RATHERFORD	DESERT CREEK 22-12 N	12-22	41S	23E	12	SENW
4303715846	01	RATHERFORD	RATHERFORD 23-12	12-23	41S	23E	12	S2NESW
4303715847	01	RATHERFORD	DESERT CREEK 31-12 N	12-31	41S	23E	12	SWNWNE
4303715848	01	RATHERFORD	N DESERT CREEK 33-12	12-33	41S	23E	12	SWNWSE
4303715850	01	RATHERFORD	N DESERT CREEK 42-12	12-42	41S	23E	12	SWSWNE
4303715851	10	RATHERFORD	DESERT CRK N 13-13	13-13	41S	23E	13	CNWSW
4303715852	10	RATHERFORD	DESERT CRK N 22-13	13-22	41S	23E	13	SENW
4303715853	10	RATHERFORD	DESERT CRK N 24-13	13-24	41S	23E	13	SESW
4303715855	10	RATHERFORD	DESERT CRK N 33-13	13-33	41S	23E	13	SENWSE
4303715856	10	RATHERFORD	DESERT CRK N 41-13	13-41	41S	23E	13	CNENE

RECEIVED

DEC 21 2017

DIV OF OIL, GAS & MINING

7

4303715857	10	RATHERFORD	DESERT CREEK 42-13	13-42	41S	23E	13	SESENE
4303715858	10	RATHERFORD	N DESERT CREEK 32-14	14-32	41S	23E	14	SESWNE
4303715860	10	RATHERFORD	DESERT CRK N 42-14	14-42	41S	23E	14	SENE
4303715862	10	RATHERFORD	RATHERFORD 31-24	24-31	41S	23E	24	NENWNE
4303715863	10	RATHERFORD	DESERT CREEK 42-24N	24-42	41S	23E	24	CSENE
4303715984	02	RATHERFORD	NAVAJO B 8	06-14	41S	24E	06	CSWSW
4303715985	02	RATHERFORD	NAVAJO B-12-7	07-12	41S	24E	07	SWSWNW
4303715986	02	RATHERFORD	NAVAJO B 1	07-14	41S	24E	07	N2SWSW
4303715989	02	RATHERFORD	NAVAJO B 5	07-34	41S	24E	07	NWSWSE
4303715991	02	RATHERFORD	NAVAJO B 12-8	08-12	41S	24E	08	SWNW
4303715992	02	RATHERFORD	NAVAJO 9B	08-14	41S	24E	08	NWSWSW
4303715993	02	RATHERFORD	NAVAJO B 21-8	08-21	41S	24E	08	NENW
4303715994	02	RATHERFORD	NAVAJO B 23-8	08-23	41S	24E	08	SENESW
4303715996	02	RATHERFORD	NAVAJO 34-8	08-34	41S	24E	08	CSWSE
4303716163	03	RATHERFORD	NAVAJO-Y 1	04-14	41S	24E	04	SWSWSW
4303716164	04	RATHERFORD	NAVAJO X 2	04-34	41S	24E	04	SWSE
4303716385	01	RATHERFORD	N DESERT CRK 34-1	01-34	41S	23E	01	SWSE
4303716394	02	RATHERFORD	6 NAVAJO-B 1	07-21	41S	24E	07	SWNENW
4303716398	08	RATHERFORD	NAVAJO-23 9	09-23	41S	24E	09	CNESW
4303716403	09	RATHERFORD	NAVAJO W 2	10-43	41S	24E	10	E2NESE
4303716404	01	RATHERFORD	N DESERT CRK 13-12	12-13	41S	23E	12	CNWSW
4303716407	10	RATHERFORD	RATHERFORD 44-13	13-44	41S	23E	13	SESE
4303716414	12	RATHERFORD	NAVAJO A 12	16-21	41S	24E	16	NENW
4303716415	12	RATHERFORD	NAVAJO A 8	16-43	41S	24E	16	NESE
4303716416	11	RATHERFORD	DESERT A 9	17-21	41S	24E	17	NENW
4303716417	11	RATHERFORD	DESERT A 20	17-43	41S	24E	17	CNESE
4303716418	11	RATHERFORD	DESERT A 3	18-21	41S	24E	18	W2NENW
4303716420	11	RATHERFORD	DESERT A 23	19-43	41S	24E	19	NESE
4303716423	11	RATHERFORD	DESERT A 31	20-21	41S	24E	20	NENW
4303716424	11	RATHERFORD	DESERT A 19	20-43	41S	24E	20	NWNESE
4303716425	12	RATHERFORD	NAVAJO A 20	21-21	41S	24E	21	E2NENW
4303716431	15	RATHERFORD	NAVAJO A 19	28-21	41S	24E	28	E2NENW
4303716432	14	RATHERFORD	NAVAJO B 4	29-21	41S	24E	29	NENW
4303716433	14	RATHERFORD	NAVAJO B 10	29-41	41S	24E	29	NENENE
4303716434	14	RATHERFORD	NAVAJO 13	29-43H	41S	24E	29	CNESE
4303730244	11	RATHERFORD	RATHERFORD UNIT 18-23	18-23	41S	24E	18	NENESW
4303730448	12	RATHERFORD	RATHERFORD UNIT 15-42	15-42	41S	24E	15	SWSENE
4303730449	12	RATHERFORD	RATHERFORD UNIT 15-22	15-22	41S	24E	15	SENW
4303730451	09	RATHERFORD	RATHERFORD UNIT 10-44	10-44	41S	24E	10	NESESE
4303730914	14	RATHERFORD	RATHERFORD 29-31	29-31	41S	24E	29	SWNWNE
4303730915	11	RATHERFORD	RATHERFORD UNIT 20-44	20-44	41S	24E	20	SWSESE
4303730916	11	RATHERFORD	RATHERFORD 19-42	19-42	41S	24E	19	N2SENE
4303730917	11	RATHERFORD	RATHERFORD 20-13	20-13	41S	24E	20	NWNWSW
4303730918	11	RATHERFORD	RATHERFORD UNIT 20-24	20-24	41S	24E	20	NWSESW
4303730930	11	RATHERFORD	RATHERFORD UNIT 20-22	20-22H	41S	24E	20	SESENW
4303730931	11	RATHERFORD	RATHERFORD UNIT 20-33	20-33	41S	24E	20	SWNWSE
4303730932	14	RATHERFORD	RATHERFORD UNIT 29-33	29-33	41S	24E	29	SENWSE
4303730937	14	RATHERFORD	RATHERFORD UNIT 29-42	29-42	41S	24E	29	N2SENE
4303731044	11	RATHERFORD	RATHERFORD UNIT 17-24	17-24	41S	24E	17	N2SESW
4303731045	11	RATHERFORD	RATHERFORD UNIT 18-44	18-44	41S	24E	18	CSESE
4303731046	11	RATHERFORD	RATHERFORD UNIT 19-22	19-22	41S	24E	19	N2SENW
4303731047	11	RATHERFORD	RATHERFORD UNIT 19-31	19-31	41S	24E	19	N2NWNE
4303731048	11	RATHERFORD	RATHERFORD UNIT 19-33	19-33	41S	24E	19	CNWSE
4303731049	11	RATHERFORD	RATHERFORD UNIT 20-11	20-11	41S	24E	20	N2NWNW
4303731050	11	RATHERFORD	RATHERFORD UNIT 20-31	20-31	41S	24E	20	E2NWNE
4303731051	11	RATHERFORD	RATHERFORD UNIT 20-42	20-42	41S	24E	20	CSENE
4303731053	14	RATHERFORD	RATHERFORD UNIT 29-11	29-11	41S	24E	29	SWNWNW
4303731079	11	RATHERFORD	RATHERFORD UNIT 18-24	18-24	41S	24E	18	N2SESW
4303731080	11	RATHERFORD	RATHERFORD UNIT 19-11	19-11	41S	24E	19	CNWNW
4303731081	11	RATHERFORD	RATHERFORD UNIT 19-44	19-44	41S	24E	19	CSESE
4303731082	14	RATHERFORD	RATHERFORD UNIT 29-22	29-22	41S	24E	29	SWSENW

RECEIVED

DEC 21 2017

DIV OF OIL, GAS & MINING

8

4303731126	01	RATHERFORD	RATHERFORD UNIT 12-34	12-34	41S	23E	12	NESWSE
4303731127	10	RATHERFORD	RATHERFORD UNIT 13-12	13-12	41S	23E	13	NWSWNW
4303731129	10	RATHERFORD	RATHERFORD UNIT 13-23	13-23	41S	23E	13	W2NESW
4303731130	10	RATHERFORD	RATHERFORD UNIT 13-34	13-34	41S	23E	13	CSWSE
4303731131	10	RATHERFORD	RATHERFORD UNIT 13-43	13-43	41S	23E	13	SWNESE
4303731132	10	RATHERFORD	RATHERFORD UNIT 24-41	24-41	41S	23E	24	W2NENE
4303731133	11	RATHERFORD	RATHERFORD UNIT 17-13	17-13	41S	24E	17	N2NWSW
4303731134	11	RATHERFORD	RATHERFORD UNIT 17-33	17-33	41S	24E	17	E2NWSE
4303731135	11	RATHERFORD	RATHERFORD UNIT 18-33	18-33	41S	24E	18	S2NWSE
4303731151	01	RATHERFORD	RATHERFORD UNIT 12-24	12-24	41S	23E	12	N2SESW
4303731152	10	RATHERFORD	RATHERFORD U 13-W-11	13-11	41S	23E	13	N2NWNW
4303731153	11	RATHERFORD	RATHERFORD UNIT 18-12	18-12	41S	24E	18	W2SWNW
4303731162	01	RATHERFORD	RATHERFORD UNIT 1-14	01-14	41S	23E	01	CSWSW
4303731163	02	RATHERFORD	RATHERFORD UNIT 7-11	07-11	41S	24E	07	E2NWNW
4303731164	02	RATHERFORD	RATHERFORD UNIT 7-13	07-13	41S	24E	07	NENWSW
4303731165	02	RATHERFORD	RATHERFORD UNIT 7-22	07-22	41S	24E	07	CSENW
4303731166	02	RATHERFORD	RATHERFORD UNIT 7-24	07-24	41S	24E	07	NESESW
4303731169	11	RATHERFORD	RATHERFORD UNIT 17-11	17-11	41S	24E	17	SENWNW
4303731170	11	RATHERFORD	RATHERFORD UNIT 17-22	17-22	41S	24E	17	NWSENW
4303731177	11	RATHERFORD	RATHERFORD UNIT 17-42	17-42	41S	24E	17	CSENE
4303731178	11	RATHERFORD	RATHERFORD UNIT 17-31	17-31	41S	24E	17	N2NWNE
4303731181	11	RATHERFORD	RATHERFORD UNIT 18-31	18-31	41S	24E	18	SWNWNE
4303731182	11	RATHERFORD	RATHERFORD UNIT 18-42	18-42	41S	24E	18	SWSENE
4303731189	02	RATHERFORD	RATHERFORD UNIT 7-44	07-44	41S	24E	07	NESESE
4303731190	01	RATHERFORD	RATHERFORD UNIT 12-12	12-12	41S	23E	12	N2SWNW
4303731201	01	RATHERFORD	RATHERFORD UNIT 12-21	12-21	41S	23E	12	CNENW
4303731202	01	RATHERFORD	RATHERFORD UNIT 12-43	12-43	41S	23E	12	N2NESE
4303731203	01	RATHERFORD	RATHERFORD UNIT 12-32	12-32	41S	23E	12	NESWNE
4303731236	11	RATHERFORD	RATHERFORD UNIT 18-22	18-22	41S	24E	18	SESENW
4303731543	01	RATHERFORD	RATHERFORD UNIT 12W-44A	12-44A	41S	23E	12	NWSESE
4303731544	01	RATHERFORD	RATHERFORD UNIT 11-41	11-41	41S	23E	11	SENENE
4303731589	10	RATHERFORD	RATHERFORD UNIT 13-14	13-14	41S	23E	13	CSWSW
4303731590	11	RATHERFORD	RATHERFORD UNIT 20-67	20-67	41S	24E	20	NWNESW
4303731591	11	RATHERFORD	RATHERFORD UNIT 20-68	20-68	41S	24E	20	SENWSW
4303731592	11	RATHERFORD	RATHERFORD UNIT 20-66	20-66	41S	24E	20	NESWNW
4303731593	10	RATHERFORD	RATHERFORD UNIT 24-32	24-32	41S	23E	24	SESWNE
4303731596	11	RATHERFORD	RATHERFORD UNIT 19-97	19-97	41S	24E	19	SESENE
4303731622	01	RATHERFORD	RATHERFORD UNIT 11-43	11-43	41S	23E	11	NESE
4303731623	10	RATHERFORD	RATHERFORD UNIT 14-41	14-41	41S	23E	14	NENE
4303731717	10	RATHERFORD	RATHERFORD UNIT 14-31	14-31	41S	23E	14	SENWNE
4303731718	11	RATHERFORD	RATHERFORD UNIT 18-43B	18-43B	41S	24E	18	NENESE
4303731719	11	RATHERFORD	RATHERFORD UNIT 19-13H	19-13H	41S	24E	19	CNWSW
4303731720	12	RATHERFORD	RATHERFORD UNIT 21-24	21-24	41S	24E	21	SESESW
4303731753	12	RATHERFORD	RATHERFORD 21-67	21-67	41S	24E	21	NESW
4303731754	11	RATHERFORD	RATHERFORD UNIT 19-24	19-24	41S	24E	19	SESW
4303731758	12	RATHERFORD	RATHERFORD 21-77	21-77	41S	24E	21	NWSE
4303731768	12	RATHERFORD	RATHERFORD UNIT 16-77	16-77	41S	24E	16	NESW
4303750025	02	RATHERFORD	RATHERFORD UNIT 08-32R	08-32R	41S	24E	08	SWNE
4303715620	18	RATHERFORD	NAVAJO-B 1	03-12	41S	24E	03	SWNW
4303715745	11	RATHERFORD	DESERT A 24	19-41	41S	24E	19	CNENE
4303715750	11	RATHERFORD	DESERT A 16	20-34	41S	24E	20	SWSE
4303715755	12	RATHERFORD	NAVAJO-A 22	21-32	41S	24E	21	SWNE
4303715756	12	RATHERFORD	NAVAJO-A 23	21-34	41S	24E	21	SWSE
4303715844	01	RATHERFORD	N DESERT CREEK 14-12	12-14	41S	23E	12	CSWSW
4303715854	10	RATHERFORD	DESERT CRK N 31-13	13-31	41S	23E	13	CNWNE
4303715983	02	RATHERFORD	NAVAJO B 34-5	05-34	41S	24E	05	SWSE
4303715990	02	RATHERFORD	NAVAJO B 41-7	07-41	41S	24E	07	NENE
4303715995	02	RATHERFORD	NAVAJO B 32-8	08-32	41S	24E	08	CSWNE
4303715997	02	RATHERFORD	NAVAJO 41-8B	08-41	41S	24E	08	CNENE
4303715998	13	RATHERFORD	NAVAJO-E 12-14	14-12	41S	24E	14	SWSWNW
4303716167	09	RATHERFORD	NAVAJO TRIBE W 3	11-14	41S	24E	11	SWSW

RECEIVED

DEC 21 2017

DIV OF OIL, GAS & MINING

9

4303716386	01	RATHERFORD	N DESERT CRK 44-2	02-44	41S	23E	02	SESE
4303716395	02	RATHERFORD	NAVAJO B 43-7	07-43	41S	24E	07	N2NESE
4303716396	02	RATHERFORD	NAVAJO 43-8 B	08-43B	41S	24E	08	CNESE
4303716400	07	RATHERFORD	NAVAJO B 5	09-43	41S	24E	09	CNESE
4303716401	07	RATHERFORD	NAVAJO B 6	10-21	41S	24E	10	NENW
4303716402	07	RATHERFORD	NAVAJO B 2	10-23	41S	24E	10	CNESW
4303716406	10	RATHERFORD	N DESERT CRK 32-13	13-32	41S	23E	13	SWNE
4303716411	12	RATHERFORD	NAVAJO-A 11	15-21	41S	24E	15	NENW
4303716412	12	RATHERFORD	NAVAJO A 19	15-23	41S	24E	15	NESW
4303716413	12	RATHERFORD	NAVAJO A 24	15-43	41S	24E	15	SWNESE
4303716435	14	RATHERFORD	NAVAJO B 16	30-21	41S	24E	30	NENW
4303730446	15	RATHERFORD	RATHERFORD UNIT 28-11	28-11	41S	24E	28	NWNWNW
4303731052	12	RATHERFORD	RATHERFORD UNIT 21-11	21-11	41S	24E	21	CNWNW
4303731128	10	RATHERFORD	RATHERFORD UNIT 13-21	13-21	41S	23E	13	W2NENW
4303731168	12	RATHERFORD	RATHERFORD UNIT 16-13	16-13	41S	24E	16	CNWSW

RECEIVED
DEC 21 2017
DIV OF OIL, GAS & MINING

26 ct wells
31 ct RWIMS

API (10-digit)	Tract	UNIT	WELL NAME	WELL NUMBER	TWP	RNG	SEC	QTR-QTR
4303715493	06	MCELMO CREEK	NAVAJO TRACT 13 4	F-17	41S	24E	12	NW
4303715494	06	MCELMO CREEK	NAVAJO 13 5	G-18	41S	24E	12	CSENW
4303715495	06	MCELMO CREEK	NAVAJO 13-2	H-15	41S	24E	01	CNWSE
4303715496	06	MCELMO CREEK	NAVAJO-29 2	H-17	41S	24E	12	NWNE
4303715498	12	MCELMO CREEK	NAVAJO TRACT 114 6	J-17	41S	25E	07	SWNWNW
4303715499	12	MCELMO CREEK	NAVAJO TRACT 114 27	J-21	41S	25E	18	NWNWNW
4303715500	12	MCELMO CREEK	NAVAJO TRACT 114 30	J-23	41S	25E	18	NWSW
4303715501	16	MCELMO CREEK	NAVAJO 115 2	J-25	41S	25E	19	NWNW
4303715503	12	MCELMO CREEK	NAVAJO-114 24	K-20	41S	25E	07	W2SESW
4303715505	12	MCELMO CREEK	NAVAJO 114 21	L-19	41S	25E	07	NWSE
4303715506	12	MCELMO CREEK	NAVAJO 114 22	L-21	41S	25E	18	S2NWNE
4303715507	12	MCELMO CREEK	NAVAJO 114 29	L-23	41S	25E	18	CNWSE
4303715508	16	MCELMO CREEK	NAVAJO 115 6	L-25	41S	25E	19	CNWNE
4303715510	12	MCELMO CREEK	NAVAJO 114 17	M-18	41S	25E	07	SENE
4303715511	12	MCELMO CREEK	NAVAJO 114 23	M-20	41S	25E	07	SESE
4303715512	12	MCELMO CREEK	NAVAJO 114 26	M-22	41S	25E	18	NESENE
4303715513	12	MCELMO CREEK	NAVAJO 114 31	M-24	41S	25E	18	SESE
4303715514	12	MCELMO CREEK	NAVAJO TRACT 114 1	N-17	41S	25E	08	SENWNW
4303715515	12	MCELMO CREEK	NAVAJO 114 2	N-19	41S	25E	08	SWNWSW
4303715516	12	MCELMO CREEK	NAVAJO 114 3	N-21	41S	25E	17	CNWNW
4303715517	12	MCELMO CREEK	NAVAJO 114 11	O-18	41S	25E	08	NWSENW
4303715518	12	MCELMO CREEK	NAVAJO 114 14	O-20	41S	25E	08	SESW
4303715519	12	MCELMO CREEK	NAVAJO 114 10	P-17	41S	25E	08	CNWNE
4303715520	12	MCELMO CREEK	NAVAJO 114 4	P-19	41S	25E	08	NWSE
4303715521	12	MCELMO CREEK	NAVAJO 114 13	Q-18	41S	25E	08	CSENE
4303715522	12	MCELMO CREEK	NAVAJO 114 12	Q-20	41S	25E	08	SWSESE
4303715617	18	MCELMO CREEK	NAVAJO B-2	F-11	40S	24E	36	NWSW
4303715618	18	MCELMO CREEK	NAVAJO-B 1	G-12	40S	24E	36	SESW
4303715619	17	MCELMO CREEK	NAVAJO-A 1	I-12	40S	24E	36	SESESE
4303715703	21	MCELMO CREEK	NAVAJO E 1	C-19	41S	24E	11	N2NESW
4303715706	07	MCELMO CREEK	NAVAJO-H 1	E-18	41S	24E	11	SENE
4303715707	09	MCELMO CREEK	NAVAJO-J- 1	F-20	41S	24E	12	SWSWSW
4303715708	11A	MCELMO CREEK	NAVAJO-F 1	H-20	41S	24E	12	SWSE
4303715709	10	MCELMO CREEK	NAVAJO C 1	I-18	41S	24E	12	NESENE
4303715710	11	MCELMO CREEK	NAVAJO C 2	I-20	41S	24E	12	NESESE
4303715947	14	MCELMO CREEK	NAVAJO E 12-13	F-22	41S	24E	13	NESWNW
4303715950	14	MCELMO CREEK	NAVAJO E 32-13	H-22	41S	24E	13	CSWNE
4303715951	14	MCELMO CREEK	NAVAJO E 34-13	H-24	41S	24E	13	SESWSE
4303715952	14	MCELMO CREEK	NAVAJO E 32-24	H-26	41S	24E	24	SWSWNE
4303715953	14	MCELMO CREEK	NAVAJO E 41-13	I-21	41S	24E	13	S2NENE
4303715954	03A	MCELMO CREEK	NAVAJO C-13-6	J-15	41S	25E	06	SWNWSW
4303715955	03A	MCELMO CREEK	NAVAJO-C 24-31	K-12	40S	25E	31	NWSESW
4303715956	03A	MCELMO CREEK	NAVAJO C 22-6	K-14	41S	25E	06	NWSENW
4303715957	03A	MCELMO CREEK	NAVAJO C 9	K-16	41S	25E	06	SESW
4303715959	03A	MCELMO CREEK	NAVAJO C 31-6	L-13	41S	25E	06	NWNE
4303715960	03A	MCELMO CREEK	NAVAJO C 33-6	L-15	41S	25E	06	SENWSE
4303715961	03A	MCELMO CREEK	NAVAJO-C 42-31	M-10	40S	25E	31	SENE
4303715962	03A	MCELMO CREEK	NAVAJO-C 1	M-12	40S	25E	31	SESESE
4303715963	03A	MCELMO CREEK	NAVAJO C 42-6	M-14	41S	25E	06	SWSENE
4303715964	03A	MCELMO CREEK	NAVAJO-C 11-32	N-09	40S	25E	32	NWNW
4303715965	03A	MCELMO CREEK	NAVAJO-C 13-32	N-11	40S	25E	32	NWNWSW
4303715966	03A	MCELMO CREEK	NAVAJO C 11-5	N-13	41S	25E	05	NWNW
4303715967	03C	MCELMO CREEK	MCELMO CREEK UNIT 0-10	O-10	40S	25E	32	SENW
4303715968	03A	MCELMO CREEK	NAVAJO-C 24-32	O-12	40S	25E	32	SESW
4303715969	03A	MCELMO CREEK	NAVAJO C 3	O-16	41S	25E	05	CSESW
4303715970	12	MCELMO CREEK	MCELMO CREEK UNIT O-22A	O-22A	41S	25E	17	SENW
4303715971	03A	MCELMO CREEK	NAVAJO-C 33-32	P-11	40S	25E	32	NWSE
4303715972	03A	MCELMO CREEK	NAVAJO C 8	P-15	41S	25E	05	CNWSE
4303715973	03A	MCELMO CREEK	NAVAJO-C 42-32	Q-10	40S	25E	32	SENE
4303715975	03A	MCELMO CREEK	NAVAJO C 5	Q-16	41S	25E	05	SESE

RECEIVED

DEC 21 2017

DIV OF OIL, GAS & MINING

11

4303715976	13	MCELMO CREEK	NAVAJO J 1	R-17	41S	25E	09	SWNWNW
4303715978	13	MCELMO CREEK	NAVAJO J 22-9	S-18	41S	25E	09	NWSENW
4303715980	13	MCELMO CREEK	NAVAJO-J 22-16	S-22	41S	25E	16	CSENW
4303715982	13	MCELMO CREEK	NAVAJO-J 42-9	U-18	41S	25E	09	SWSENE
4303716143	19	MCELMO CREEK	NAVAJO R 3	G-14	41S	24E	01	CSENW
4303716144	05	MCELMO CREEK	NAVAJO-R 5	G-16	41S	24E	01	NWSESW
4303716145	05	MCELMO CREEK	NAVAJO R 1	I-14	41S	24E	01	CSENE
4303716146	02	MCELMO CREEK	NAVAJO F 13	O-08	40S	25E	29	SESW
4303716147	04	MCELMO CREEK	NAVAJO P 20	R-09	40S	25E	33	NWNW
4303716148	04	MCELMO CREEK	NAVAJO P 4	R-13	41S	25E	04	CNWNW
4303716149	04	MCELMO CREEK	NAVAJO P 1	R-15	41S	25E	04	NWNWSW
4303716150	04	MCELMO CREEK	NAVAJO P 9	S-12	40S	25E	33	SESESW
4303716151	04	MCELMO CREEK	NAVAJO P 3	S-14	41S	25E	04	SWSENW
4303716152	04	MCELMO CREEK	NAVAJO P 2	S-16	41S	25E	04	W2SESW
4303716155	04	MCELMO CREEK	NAVAJO-P 13	U-12	40S	25E	33	SESE
4303716156	04	MCELMO CREEK	NAVAJO P 8	U-14	41S	25E	04	CSENE
4303716157	04	MCELMO CREEK	NAVAJO P 7	U-16	41S	25E	04	SESE
4303716265	24	MCELMO CREEK	NAVAJO-C 1	C-14	41S	24E	02	SENW
4303716267	25	MCELMO CREEK	NAVAJO-B 2	D-13	41S	24E	02	NWNE
4303716268	25	MCELMO CREEK	NAVAJO-B 1	E-14	41S	24E	02	SESENE
4303716338	22	MCELMO CREEK	NAVAJO D 2	A-17	41S	24E	10	NENE
4303716341	20	MCELMO CREEK	NAVAJO-C 2	D-15	41S	24E	02	NWSE
4303716342	08	MCELMO CREEK	NAVAJO-D 2	E-19	41S	24E	11	CNESE
4303716343	14	MCELMO CREEK	NAVAJO E 41-14	E-21	41S	24E	14	NENE
4303716344	14	MCELMO CREEK	NAVAJO 43-14	E-23	41S	24E	14	NESE
4303716345	19	MCELMO CREEK	NAVAJO-R 4	F-13	41S	24E	01	SWNWNW
4303716346	09	MCELMO CREEK	NAVAJO J 2	G-19	41S	24E	12	NESW
4303716348	14	MCELMO CREEK	NAVAJO E 23-13	G-23	41S	24E	13	NWNESW
4303716349	14	MCELMO CREEK	NAVAJO E 21-24	G-25	41S	24E	24	CNENW
4303716350	17	MCELMO CREEK	NAVAJO-A 2	H-11	40S	24E	36	NWSE
4303716351	05	MCELMO CREEK	NAVAJO-R 2	H-13	41S	24E	01	NWNWNE
4303716352	14	MCELMO CREEK	NAVAJO-E 43-13	I-23	41S	24E	13	CNESE
4303716353	14	MCELMO CREEK	NAVAJO E 3	I-25	41S	24E	24	NENE
4303716354	03A	MCELMO CREEK	NAVAJO-C 13-31	J-11	40S	25E	31	CNWSW
4303716355	03A	MCELMO CREEK	NAVAJO C 11-6	J-13	41S	25E	06	NWNWNW
4303716356	12	MCELMO CREEK	NAVAJO 114 20	J-19	41S	25E	07	NWSW
4303716357	12	MCELMO CREEK	NAVAJO 114 18	K-18	41S	25E	07	SENW
4303716358	12	MCELMO CREEK	NAVAJO 114 25	K-24	41S	25E	18	SESW
4303716359	03A	MCELMO CREEK	NAVAJO C 31-31	L-09	40S	25E	31	CNWNE
4303716360	12	MCELMO CREEK	NAVAJO 9	L-17	41S	25E	07	NWNE
4303716361	03A	MCELMO CREEK	NAVAJO C 2	M-16	41S	25E	06	SESE
4303716362	02	MCELMO CREEK	NAVAJO F 3	N-07	40S	25E	29	NWSW
4303716363	03A	MCELMO CREEK	NAVAJO C 6	N-15	41S	25E	05	NENWSW
4303716365	03A	MCELMO CREEK	NAVAJO C 22-5	O-14	41S	25E	05	SENW
4303716367	03A	MCELMO CREEK	NAVAJO-C 31-32	P-09	40S	25E	32	NWNE
4303716368	03A	MCELMO CREEK	NAVAJO C 31-5	P-13	41S	25E	05	NWNE
4303716369	12	MCELMO CREEK	NAVAJO 114 8	P-21	41S	25E	17	CNWNE
4303716373	13	MCELMO CREEK	NAVAJO 2	R-19	41S	25E	09	CNWSW
4303716374	13	MCELMO CREEK	NAVAJO-J 11-16	R-21	41S	25E	16	NWNW
4303716375	04	MCELMO CREEK	NAVAJO P 15	S-10	40S	25E	33	CSENW
4303716377	01	MCELMO CREEK	NAVAJO 7	T-08	40S	25E	28	CSWSE
4303716378	04	MCELMO CREEK	NAVAJO P 6	T-13	41S	25E	04	NWNWNE
4303716379	04	MCELMO CREEK	NAVAJO P 5	T-15	41S	25E	04	NWSE
4303716380	13	MCELMO CREEK	NAVAJO 31-9	T-17	41S	25E	09	SENWNE
4303716381	04	MCELMO CREEK	NAVAJO P 16	U-10	40S	25E	33	SENE
4303716383	04	MCELMO CREEK	NAVAJO P 12	V-13	41S	25E	03	CNWNW
4303716384	04	MCELMO CREEK	NAVAJO P 10	V-15	41S	25E	03	W2NWSW
4303720184	07	MCELMO CREEK	MCELMO CREEK UNIT F-18	F-18	41S	24E	12	S2SWNW
4303720304	11A	MCELMO CREEK	MCELMO CREEK UNIT H-19	H-19	41S	24E	12	NWSE
4303730040	03A	MCELMO CREEK	MCELMO CREEK L-12	L-12	40S	25E	31	SESWSE
4303730074	04	MCELMO CREEK	MCELMO CREEK UNIT T-12	T-12	40S	25E	[illegible]	[illegible]

RECEIVED

DEC 21 2017

DIV OF OIL, GAS & MINING

12

4303730080	04	MCELMO CREEK	MCELMO CREEK T-09A	T-09A	40S	25E	33	SWNWNE
4303730179	04	MCELMO CREEK	MCELMO CREEK UNIT R-11A	R-11A	40S	25E	33	NENWSW
4303730180	14	MCELMO CREEK	MCELMO CREEK UNIT I-24	I-24	41S	24E	13	E2SESE
4303730202	04	MCELMO CREEK	MCU R-14	R-14	41S	25E	04	SWSWNW
4303730255	19	MCELMO CREEK	MCU F-14	F-14	41S	24E	01	SESWNW
4303730256	07	MCELMO CREEK	MCU D-18	D-18	41S	24E	11	SWSWNE
4303730257	05	MCELMO CREEK	MCU I-13	I-13	41S	24E	01	NENENE
4303730267	12	MCELMO CREEK	MCELMO CREEK P-18	P-18	41S	25E	08	NESWNE
4303730269	12	MCELMO CREEK	MCELMO CREEK UNIT N-20	N-20	41S	25E	08	NESWSW
4303730270	12	MCELMO CREEK	MCELMO CREEK UNIT O-19	O-19	41S	25E	08	SENESW
4303730271	12	MCELMO CREEK	MCELMO CREEK UNIT Q-17	Q-17	41S	25E	08	SENENE
4303730272	04	MCELMO CREEK	MCELMO CREEK UNIT R-16	R-16	41S	25E	04	SWSWSW
4303730275	03A	MCELMO CREEK	MCELMO CREEK UNIT O-15	O-15	41S	25E	05	NENESW
4303730276	03A	MCELMO CREEK	MCELMO CREEK UNIT P-14	P-14	41S	25E	05	NESWNE
4303730277	03A	MCELMO CREEK	MCELMO CREEK UNIT N-16	N-16	41S	25E	05	NESWSW
4303730278	03B	MCELMO CREEK	MCELMO CREEK UNIT P-12	P-12	40S	25E	32	NWSWSE
4303730280	03A	MCELMO CREEK	MCELMO CREEK UNIT O-13	O-13	41S	25E	05	NENENW
4303730281	03A	MCELMO CREEK	MCELMO CREEK UNIT N-14	N-14	41S	25E	05	SESWNW
4303730282	03A	MCELMO CREEK	MCELMO CRK UNIT O-11	O-11	40S	25E	32	NWNESW
4303730283	03A	MCELMO CREEK	MCELMO CRK UNIT Q-11	Q-11	40S	25E	32	NWNESE
4303730284	03A	MCELMO CREEK	MCELMO CREEK UNIT P-10	P-10	40S	25E	32	SWNE
4303730286	12	MCELMO CREEK	MCU N-18	N-18	41S	25E	08	NWSWNW
4303730287	03A	MCELMO CREEK	MCU P-16	P-16	41S	25E	05	NESWSE
4303730288	03A	MCELMO CREEK	MCU Q-13	Q-13	41S	25E	05	SWNENE
4303730289	12	MCELMO CREEK	MCELMO CREEK O-17	O-17	41S	25E	08	SWNENW
4303730290	03A	MCELMO CREEK	MCU MCELMO CREEK Q-15	Q-15	41S	25E	05	NENESE
4303730291	03A	MCELMO CREEK	MCELMO CREEK N-12	N-12	40S	25E	32	NESWSW
4303730302	12	MCELMO CREEK	MCU K-21	K-21	41S	25E	18	SWNENW
4303730303	12	MCELMO CREEK	MCU M-21	M-21	41S	25E	18	SENENE
4303730304	03A	MCELMO CREEK	MCU N-10	N-10	40S	25E	32	SWSWNW
4303730306	12	MCELMO CREEK	MCU J-20	J-20	41S	25E	07	NWSWSW
4303730307	12	MCELMO CREEK	MCU M-19	M-19	41S	25E	07	NWNESE
4303730313	12	MCELMO CREEK	MCU L-20	L-20	41S	25E	07	SESWSE
4303730314	12	MCELMO CREEK	MCU M-17	M-17	41S	25E	07	NWNENE
4303730315	03A	MCELMO CREEK	MCU M-15	M-15	41S	25E	06	SENESE
4303730318	12	MCELMO CREEK	MCELMO CREEK UNIT J-18	J-18	41S	25E	07	NESWNW
4303730319	12	MCELMO CREEK	MCELMO CREEK L-18	L-18	41S	25E	07	NESWNE
4303730320	03A	MCELMO CREEK	MCELMO CREEK UNIT M-13	M-13	41S	25E	06	SENENE
4303730321	03A	MCELMO CREEK	MCU J-14	J-14	41S	25E	06	NWSWNW
4303730323	03A	MCELMO CREEK	MCELMO CREEK L-14	L-14	41S	25E	06	NESWNE
4303730324	03A	MCELMO CREEK	MCU L-16	L-16	41S	25E	06	SESWSE
4303730326	03A	MCELMO CREEK	MCU K-15	K-15	41S	25E	06	SWNESW
4303730327	12	MCELMO CREEK	MCU K-19	K-19	41S	25E	07	NWNESW
4303730328	12	MCELMO CREEK	MCELMO CREEK K-17	K-17	41S	25E	07	SWNENW
4303730336	12	MCELMO CREEK	MCU K-23	K-23	41S	25E	18	SWNESW
4303730337	03A	MCELMO CREEK	MCU K-13	K-13	41S	25E	06	SENENW
4303730338	12	MCELMO CREEK	MCU M-23	M-23	41S	25E	18	SWNESE
4303730339	12	MCELMO CREEK	MCU L-24	L-24	41S	25E	18	SWSWSE
4303730341	12	MCELMO CREEK	MCU J-22	J-22	41S	25E	18	NWSWNW
4303730342	03A	MCELMO CREEK	MCU J-12	J-12	40S	25E	31	SWSWSW
4303730347	12	MCELMO CREEK	MCU L-22	L-22	41S	25E	18	NWNWSE
4303730354	03A	MCELMO CREEK	MCU M-11	M-11	40S	25E	31	NENESE
4303730355	02	MCELMO CREEK	MCU P-08	P-08	40S	25E	29	NWSWSE
4303730356	03A	MCELMO CREEK	MCU O-09	O-09	40S	25E	32	N2NENW
4303730358	17	MCELMO CREEK	MCU I-11	I-11	40S	24E	36	SENESE
4303730359	03A	MCELMO CREEK	MCU K-11	K-11	40S	25E	31	SWNESW
4303730360	17	MCELMO CREEK	MCU H-12	H-12	40S	24E	36	SWSWSE
4303730361	06	MCELMO CREEK	MCU I-15	I-15	41S	24E	01	SENESE
4303730362	05	MCELMO CREEK	MCU H-14	H-14	41S	24E	01	NWSWNE
4303730363	19	MCELMO CREEK	MCU G-13	G-13	41S	24E	01	NENENW
4303730364	10	MCELMO CREEK	MCU H-18	H-18	41S	24E	12	NESWNE

RECEIVED

DEC 21 2017

DIV OF OIL, GAS & MINING

13

4303730365	11	MCELMO CREEK	MCU I-19	I-19	41S	24E	12	NENESE
4303730366	06	MCELMO CREEK	MCU H-16	H-16	41S	24E	01	NESWSE
4303730367	06	MCELMO CREEK	MCU I-17	I-17	41S	24E	12	NENENE
4303730376	18	MCELMO CREEK	MCU G-11	G-11	40S	24E	36	SENESW
4303730378	06	MCELMO CREEK	MCU G-17	G-17	41S	24E	12	NWNENW
4303730379	24	MCELMO CREEK	MCU C-13	C-13	41S	24E	02	SENENW
4303730380	18	MCELMO CREEK	MCU F-12	F-12	40S	24E	36	SWSWSW
4303730381	05	MCELMO CREEK	MCU F-16	F-16	41S	24E	01	NWSWSW
4303730384	23	MCELMO CREEK	MCU C-15	C-15	41S	24E	02	SENESW
4303730385	21	MCELMO CREEK	MCU C-17	C-17	41S	24E	11	NENENW
4303730386	25	MCELMO CREEK	MCU D-14	D-14	41S	24E	02	NESWNE
4303730387	20	MCELMO CREEK	MCU D-16	D-16	41S	24E	02	SESWSE
4303730388	25	MCELMO CREEK	MCU E-13	E-13	41S	24E	02	SENENE
4303730389	20	MCELMO CREEK	MCU E-15	E-15	41S	24E	02	SENESE
4303730390	06	MCELMO CREEK	MCU E-17	E-17	41S	24E	11	SWNENE
4303730399	11A	MCELMO CREEK	MCELMO CREEK G-18B	G-18B	41S	24E	12	NWSWNE
4303730400	12	MCELMO CREEK	MCU K-22X	K-22X	41S	25E	18	SWNENW
4303730401	04	MCELMO CREEK	MCU T-12A	T-12A	40S	25E	33	SWSWSE
4303730414	03A	MCELMO CREEK	MCELMO CREEK J-15B	J-15B	41S	25E	06	NENWSW
4303730415	06	MCELMO CREEK	MCU H-17B	H-17B	41S	24E	01	SWSESE
4303730416	03A	MCELMO CREEK	MCU M-12B	M-12B	40S	25E	31	NESESE
4303730417	03A	MCELMO CREEK	MCU I-16B	I-16B	41S	25E	06	SWNWSW
4303730452	04	MCELMO CREEK	MCU S-11	S-11	40S	25E	33	NESW
4303730453	04	MCELMO CREEK	MCU S-13	S-13	41S	25E	04	SWNENW
4303730454	01	MCELMO CREEK	MCU U-08	U-08	40S	25E	28	SESESE
4303730456	04	MCELMO CREEK	MCU U-13	U-13	41S	25E	04	SWNENE
4303730459	04	MCELMO CREEK	MCU T-14	T-14	41S	25E	04	NESWNE
4303730460	04	MCELMO CREEK	MCU T-10	T-10	40S	25E	33	NESWNE
4303730463	12	MCELMO CREEK	MCU Q-21	Q-21	41S	25E	17	SWNENE
4303730506	12	MCELMO CREEK	MCU P-22	P-22	41S	25E	17	SWSWNE
4303730632	04	MCELMO CREEK	MCELMO CREEK UNIT S-15	S-15	41S	25E	04	SWNESW
4303730633	04	MCELMO CREEK	MCELMO CREEK UT U-15	U-15	41S	25E	04	NWNESE
4303730651	04	MCELMO CREEK	MCELMO CREEK UNIT R-12	R-12	40S	25E	33	NWSWSW
4303730652	12	MCELMO CREEK	MCELMO CREEK UNIT Q-19	Q-19	41S	25E	08	SWNESE
4303730653	04	MCELMO CREEK	MCELMO CREEK UNIT V-14	V-14	41S	25E	03	SWSWNW
4303730654	04	MCELMO CREEK	MCELMO CREEK UNIT T-16	T-16	41S	25E	04	SWSWSE
4303730661	12	MCELMO CREEK	MCELMO CREEK UNIT N-22	N-22	41S	25E	17	NESWNW
4303730662	12	MCELMO CREEK	MCELMO CREEK UNIT O-21	O-21	41S	25E	17	SWNENW
4303730778	13	MCELMO CREEK	MCELMO CREEK R-18	R-18	41S	25E	09	NWSWNW
4303730779	13	MCELMO CREEK	MCELMO CREEK S-17	S-17	41S	25E	09	SWNENW
4303730780	13	MCELMO CREEK	MCELMO CREEK S-19	S-19	41S	25E	09	SENESW
4303730781	13	MCELMO CREEK	MCELMO CREEK T-18	T-18	41S	25E	09	NESWNE
4303730782	13	MCELMO CREEK	MCELMO CREEK U-17	U-17	41S	25E	09	NWNENE
4303730974	14	MCELMO CREEK	MCELMO CREEK UNIT G-21A	G-21A	41S	24E	13	SWNENW
4303731008	14	MCELMO CREEK	MCELMO CREEK G-24	G-24	41S	24E	13	SESESW
4303731011	03A	MCELMO CREEK	MCELMO CREEK J-16-A	J-16A	41S	25E	06	SWSWSW
4303731012	02	MCELMO CREEK	MCELMO CREEK N-08	N-08	40S	25E	29	NESWSW
4303731013	03A	MCELMO CREEK	MCELMO CREEK Q-09	Q-09	40S	25E	32	SENENE
4303731121	04	MCELMO CREEK	MCELMO CREEK UNIT R-10	R-10	40S	25E	33	SWSWNW
4303731122	04	MCELMO CREEK	MCELMO CREEK UNIT U-09	U-09	40S	25E	33	SENENE
4303731123	12	MCELMO CREEK	MCELMO CREEK UNIT O-23	O-23	41S	25E	17	NWNESW
4303731124	12	MCELMO CREEK	MCELMO CREEK UNIT Q-23	Q-23	41S	25E	17	SESENE
4303731149	05	MCELMO CREEK	MCELMO CREEK UNIT F-15A	F-15A	41S	24E	01	SWNWSW
4303731186	16	MCELMO CREEK	MCELMO CREEK K-25	K-25	41S	25E	19	NWNENW
4303731187	14	MCELMO CREEK	MCELMO CREEK I-22	I-22	41S	24E	13	NWSENE
4303731188	09	MCELMO CREEK	MCELMO CREEK G-20	G-20	41S	24E	12	SWSESW
4303731192	14	MCELMO CREEK	MCELMO CREEK H-21	H-21	41S	24E	13	SWNWNE
4303731193	14	MCELMO CREEK	MCELMO CREEK UNIT H-23	H-23	41S	24E	13	NENWSE
4303731204	14	MCELMO CREEK	MCELMO CREEK UNIT G-22	G-22	41S	24E	13	NESENW
4303731205	12	MCELMO CREEK	MCELMO CREEK J-24	J-24	41S	25E	18	NWSWSW
4303731439	12	MCELMO CREEK	MCELMO CREEK UNIT P-23A	P-23A	41S	25E	[illegible]	SWSWNE

RECEIVED

DEC 21 2017

DIV OF OIL, GAS & MINING

14

4303715330	01	MCELMO CREEK	INDIAN 2	S-05	40S	25E	28	CNENW
4303715331	01	MCELMO CREEK	NAVAJO 3	S-07	40S	25E	28	CNESW
4303715523	12	MCELMO CREEK	NAVAJO 114 15	Q-22	41S	25E	17	CSENE
4303715616	20	MCELMO CREEK	NAVAJO-C 1	E-16	41S	24E	02	SESE
4303715702	21	MCELMO CREEK	NAVAJO E 2	C-18	41S	24E	11	SENW
4303715704	07	MCELMO CREEK	NAVAJO-H 2	D-17	41S	24E	11	E2NWNE
4303715958	03A	MCELMO CREEK	NAVAJO 33-31-C	L-11	40S	25E	31	NWSE
4303715974	03A	MCELMO CREEK	NAVAJO-C 42-5	Q-14	41S	25E	05	E2SENE
4303716364	12	MCELMO CREEK	NAVAJO 14 7	N-23	41S	25E	17	N2NWSW
4303716366	02	MCELMO CREEK	NAVAJO TRIBE-F 18	P-07	40S	25E	29	NWSE
4303716515	12	MCELMO CREEK	NAVAJO-114 32	O-24	41S	25E	17	SESW
4303730353	02	MCELMO CREEK	MCU O-07	O-07	40S	25E	29	NENESW
4303730383	24	MCELMO CREEK	MCU B-14	B-14	41S	24E	02	SWSWNW
4303730455	04	MCELMO CREEK	MCU U-11	U-11	40S	25E	33	SENESE
4303730457	04	MCELMO CREEK	MCU S-08	S-08	40S	25E	33	NESENW
4303730462	13	MCELMO CREEK	M C U R-20	R-20	41S	25E	09	NWSWSW
4303730505	12	MCELMO CREEK	MCU P-20	P-20	41S	25E	08	NESWSE
4303731677	03A	MCELMO CREEK	MCELMO CREEK UNIT Q-12A	Q-12A	40S	25E	32	SWSESE

RECEIVED
DEC 21 2017
DIV OF OIL, GAS & MINING

15

354 ct wells -
358 Abbms

API (10-digit)	Tract	UNIT	WELL NAME	WELL NUMBER	TWP	RNG	SEC	QTR-QTR
4303715083	15A	ANETH	NAVAJO FEDERAL 3 1	F-418	40S	24E	18	SESW
4303715412	08	ANETH	WEST-ISMAY-FEDERAL 3	E-307	40S	24E	07	CNWSW
4303715413	08	ANETH	WEST ISMAY-FED 1	E-118	40S	24E	18	CNWNW
4303715415	08	ANETH	W ISMAY-FEDERAL 2	F-407	40S	24E	07	CSESW
4303715485	30	ANETH	NAVAJO 4	E-136	40S	24E	36	CNWNW
4303715486	31	ANETH	NAVAJO 2-A	G-136	40S	24E	36	NWNE
4303715701	35B	ANETH	FEDERAL B 1	D-124	40S	23E	24	NENE
4303715821	05	ANETH	BURTON 12-13	A-213	40S	23E	13	SWSWNW
4303715822	05	ANETH	BURTON 14-12	A-412	40S	23E	12	SESWSW
4303715823	05	ANETH	BURTON 14-13	A-413	40S	23E	13	SWSW
4303715824	05	ANETH	BURTON 21-13	B-113	40S	23E	13	NENW
4303715825	05	ANETH	BURTON 22-13	B-213	40S	23E	13	CSENW
4303715826	05	ANETH	BURTON 23-13	B-313	40S	23E	13	NESW
4303715827	05	ANETH	BURTON 31-13	C-113	40S	23E	13	NWNE
4303715828	05	ANETH	BURTON 33-13	C-313	40S	23E	13	NWSE
4303715829	05	ANETH	BURTON 34-12	C-412	40S	23E	12	N2SWSE
4303715830	05	ANETH	BURTON 42-13	D-213	40S	23E	13	SENE
4303715831	05	ANETH	BURTON 43-12	D-312	40S	23E	12	NESE
4303715832	25	ANETH	STATE 3 11-16	E-116	40S	24E	16	NWNWNW
4303715833	25	ANETH	STATE-3 12-16	E-216	40S	24E	16	SESWNW
4303715834	25	ANETH	STATE 3 14-16	E-416	40S	24E	16	SESWSW
4303715835	25	ANETH	STATE 32-16	G-216	40S	24E	16	SWNE
4303715836	25	ANETH	STATE 3 34-16	G-416	40S	24E	16	CSWSE
4303715837	25	ANETH	STATE 3 43-16	H-316	40S	24E	16	CNESE
4303715938	27	ANETH	NAVAJO A 13	E-213	40S	24E	13	CSWNW
4303715939	27	ANETH	NAVAJO A 6	E-214	40S	24E	14	NWSWNW
4303715940	27	ANETH	NAVAJO-A 14-11	E-411	40S	24E	11	SESWSW
4303715941	27	ANETH	NAVAJO A 4	E-413	40S	24E	13	CSWSW
4303715942	27	ANETH	NAVAJO A 5	F-314	40S	24E	14	CNESW
4303715944	27	ANETH	NAVAJO-A 10	G-411	40S	24E	11	SWSE
4303715945	27	ANETH	NAVAJO A 34-14	G-414	40S	24E	14	CSWSE
4303715946	33	ANETH	NAVAJO C 11-31	J-131	40S	25E	31	W2NWNW
4303716030	02	ANETH	ARROWHEAD 7	A-214	40S	23E	14	SWNW
4303716032	02	ANETH	ARROWHEAD 6	B-114	40S	23E	14	CNENW
4303716033	02	ANETH	ARROWHEAD 3	C-214	40S	23E	14	SWNE
4303716035	02	ANETH	ARROWHEAD 5	C-414	40S	23E	14	NWSWSE
4303716036	03	ANETH	RICE 1	D-123	40S	23E	23	NWNENE
4303716038	02	ANETH	ARROWHEAD 4	D-314	40S	23E	14	CNESE
4303716049	16	ANETH	NAVAJO G 9	E-117	40S	24E	17	NWNWNW
4303716050	18	ANETH	NAVAJO D 10	E-120	40S	24E	20	CNWNW
4303716051	18	ANETH	NAVAJO D 4	E-121	40S	24E	21	NWNW
4303716052	28	ANETH	NAVAJO 2	E-123	40S	24E	23	CNWNW
4303716054	28	ANETH	NAVAJO C 29	E-126	40S	24E	26	SWNWNW
4303716055	23	ANETH	NAVAJO S 2	E-129	40S	24E	29	CNWNW
4303716057	21	ANETH	NAVAJO E 18	E-209	40S	24E	09	SWNW
4303716058	21	ANETH	NAVAJO E 2	E-215	40S	24E	15	SWSWNW
4303716059	18	ANETH	NAVAJO D 9	E-222	40S	24E	22	SWNW
4303716063	14B	ANETH	NAVAJO FED UNIT 4 1	E-318	40S	24E	18	CNWSW
4303716065	18	ANETH	NAVAJO D 17	E-320	40S	24E	20	NENWSW
4303716066	18	ANETH	NAVAJO D 14	E-321	40S	24E	21	NWSW
4303716067	18	ANETH	NAVAJO D 19	E-322	40S	24E	22	CNWSW
4303716068	28	ANETH	NAVAJO C 12	E-323	40S	24E	23	W2NWSW
4303716069	28	ANETH	NAVAJO C 10	E-324	40S	24E	24	CNWSW
4303716070	28	ANETH	NAVAJO C 21	E-325	40S	24E	25	CNWSW
4303716071	28	ANETH	NAVAJO C 30	E-326	40S	24E	26	CNWSW
4303716072	29	ANETH	NAVAJO Q 2	E-335	40S	24E	35	SENWSW
4303716073	21	ANETH	NAVAJO E 6	E-415	40S	24E	15	CSWSW
4303716074	21	ANETH	NAVAJO E 12	F-115	40S	24E	15	SENENW
4303716075	18	ANETH	NAVAJO D 11	F-122	40S	24E	22	CNENW
4303716076	20A	ANETH	NAVAJO-FEDERAL-UNIT 1	F-208	40S	24E	08	SENW
4303716077	18	ANETH	NAVAJO D 26	F-219	40S	24E	19	NESENW
4303716078	18	ANETH	NAVAJO D 6	F-221	40S	24E	21	CSENW
4303716079	28	ANETH	NAVAJO C 7	F-223	40S	24E	23	SENW
4303716080	28	ANETH	NAVAJO C 20	F-225	40S	24E	25	SESENW

RECEIVED
DEC 21 2017
DIV OF OIL, GAS & MINING

16

4303716081	18	ANETH	NAVAJO-D 29	F-319	40S	24E	19	NESW
4303716082	21	ANETH	NAVAJO E 4	F-409	40S	24E	09	CSESW
4303716084	18	ANETH	NAVAJO D 21	F-421	40S	24E	21	SESESW
4303716085	18	ANETH	NAVAJO D 23	F-422	40S	24E	22	SESW
4303716086	28	ANETH	NAVAJO C 17	F-423	40S	24E	23	NWSESW
4303716087	28	ANETH	NAVAJO C 13	F-424	40S	24E	24	SESW
4303716088	21	ANETH	NAVAJO E 9	G-115	40S	24E	15	CNWNE
4303716089	16	ANETH	NAVAJO G 3	G-117	40S	24E	17	CNWNE
4303716090	13A	ANETH	NAVAJO FEDERAL 2 1	G-118	40S	24E	18	NENE
4303716091	18	ANETH	NAVAJO D 16	G-119	40S	24E	19	NWNE
4303716092	22	ANETH	NAVAJO L 5	G-120	40S	24E	20	NWNE
4303716095	28	ANETH	NAVAJO C 6	G-125	40S	24E	25	NWNE
4303716097	23	ANETH	NAVAJO S 1	G-129	40S	24E	29	NENWNE
4303716099	18	ANETH	NAVAJO D 1	G-222	40S	24E	22	NWSWNE
4303716101	22	ANETH	NAVAJO ALLOTTEES L 6	G-308	40S	24E	08	SENWSE
4303716102	21	ANETH	NAVAJO E 3	G-309	40S	24E	09	CNWSE
4303716103	16	ANETH	NAVAJO G-X 1	G-317	40S	24E	17	SENWSE
4303716104	16	ANETH	NAVAJO G 4	G-318	40S	24E	18	N2NWSE
4303716105	18	ANETH	NAVAJO D 12	G-320	40S	24E	20	CNWSE
4303716111	28	ANETH	NAVAJO C 15	G-324	40S	24E	24	CNWSE
4303716113	28	ANETH	NAVAJO C 27	G-326	40S	24E	26	CNWSE
4303716114	24	ANETH	NAVAJO A 1	G-329	40S	24E	29	NWSE
4303716115	29	ANETH	NAVAJO Q 6	G-335	40S	24E	35	NWSE
4303716116	21	ANETH	ANETH UNIT G-415	G-415	40S	24E	15	SWSE
4303716117	18	ANETH	NAV IND TRIB LNDS D 2	H-122	40S	24E	22	CNENE
4303716119	21	ANETH	NAVAJO E 16	H-208	40S	24E	08	S2SENE
4303716120	16	ANETH	NAVAJO G 5	H-218	40S	24E	18	CSENE
4303716121	18	ANETH	NAVAJO D 3	H-219	40S	24E	19	NESENE
4303716122	18	ANETH	NAVAJO INDIAN LANDS 7	H-221	40S	24E	21	NE
4303716123	28	ANETH	NAVAJO C 8	H-223	40S	24E	23	NWSENE
4303716124	28	ANETH	NAVAJO C 11	H-225	40S	24E	25	CSENE
4303716126	21	ANETH	NAVAJO E 1	H-415	40S	24E	15	NWSESE
4303716128	28	ANETH	NAVAJO C 3	H-423	40S	24E	23	NESESE
4303716129	28	ANETH	NAVAJO C 24	H-425	40S	24E	25	CSESE
4303716130	29	ANETH	NAVAJO Q 7	H-435	40S	24E	35	SWSESE
4303716132	32	ANETH	NAVAJO 9-F	J-130	40S	25E	30	NWNW
4303716134	32	ANETH	NAVAJO 5-F	J-330	40S	25E	30	NENWSW
4303716135	32	ANETH	NAVAJO F 2	K-230	40S	25E	30	SESENW
4303716137	32	ANETH	NAVAJO 7-F	K-430	40S	25E	30	SESW
4303716138	32	ANETH	NAVAJO 12-F	L-130	40S	25E	30	SENWNE
4303716139	32	ANETH	NAVAJO 6-F	L-330	40S	25E	30	NWSE
4303716140	32	ANETH	ANETH UNIT L-419	L-419	40S	25E	19	SWSE
4303716141	32	ANETH	NAVAJO 10-F	M-230	40S	25E	30	N2SENE
4303716222	26	ANETH	ANETH A-1 28	E-128	40S	24E	28	CNWNW
4303716224	26	ANETH	ANETH C-1 28	G-128	40S	24E	28	CNWNE
4303716225	26	ANETH	ANETH 34-C-1	G-134	40S	24E	34	NWNWNE
4303716226	26	ANETH	ANETH UNIT A-27-C-3	G-327	40S	24E	27	NWSE
4303716227	26	ANETH	ANETH 34-C-3	G-334	40S	24E	34	W2NWSE
4303716229	26	ANETH	ANETH 33-D4	H-433	40S	24E	33	NESESE
4303716270	06	ANETH	FEDERAL A 1	A-124	40S	23E	24	NWNW
4303716271	03	ANETH	RICE 2	B-123	40S	23E	23	NENW
4303716272	05	ANETH	BURTON 23-12	B-312	40S	23E	12	NESW
4303716273	02	ANETH	ARROWHEAD 2	B-314	40S	23E	14	NENESW
4303716277	02	ANETH	ARROWHEAD 1	D-114	40S	23E	14	NENE
4303716278	05	ANETH	ANETH D-212	D-212	40S	23E	12	NESENE
4303716279	05	ANETH	BURTON 44-13	D-413	40S	23E	13	SESE
4303716280	17B	ANETH	NAVAJO FED B 1	E-119	40S	24E	19	NWNW
4303716285	25	ANETH	STATE 3 21-16	F-116	40S	24E	16	CNENW
4303716286	16	ANETH	NAVAJO G 8	F-217	40S	24E	17	SENW
4303716287	12A	ANETH	NAVAJO-FED UNIT 1	F-218	40S	24E	18	NESENW
4303716288	18	ANETH	NAVAJO D 8	F-220	40S	24E	20	CSENW
4303716289	28	ANETH	NAVAJO 16	F-224	40S	24E	24	CSENW
4303716290	28	ANETH	NAVAJO C 23	F-226	40S	24E	26	SENW
4303716292	23	ANETH	NAVAJO S 4	F-229	40S	24E	29	SENW
4303716293	29	ANETH	NAVAJO Q 5	F-235	40S	24E	35	SENW

RECEIVED
DEC 21 2017
DIV OF OIL, GAS & MINING

17

4303716294	30	ANETH	NAVAJO 3	F-236	40S	24E	36	CSENW
4303716296	21	ANETH	NAVAJO E 8	F-315	40S	24E	15	SENESW
4303716297	25	ANETH	STATE B 23-16	F-316	40S	24E	16	NENESW
4303716298	21	ANETH	NAVAJO E 13	F-408	40S	24E	08	CSESW
4303716299	16	ANETH	NAVAJO G 6	F-417	40S	24E	17	SESW
4303716300	18	ANETH	NAVAJO D 20	F-420	40S	24E	20	CSESW
4303716301	28	ANETH	NAVAJO C 32	F-425	40S	24E	25	SESW
4303716306	28	ANETH	NAV IND TRIB LND C 1	G-123	40S	24E	23	CNWNE
4303716307	26	ANETH	ANETH 27-C-1	G-127	40S	24E	27	CNWNE
4303716309	18	ANETH	NAVAJO D 25	G-319	40S	24E	19	SWNWSE
4303716310	27	ANETH	NAVAJO A 9	H-114	40S	24E	14	NENE
4303716312	25	ANETH	STATE 3 42-16	H-216	40S	24E	16	SENE
4303716313	22	ANETH	NAVAJO L 4	H-217	40S	24E	17	SWSENE
4303716314	22	ANETH	NAVAJO L 2	H-220	40S	24E	20	SENE
4303716316	28	ANETH	NAVAJO C 19	H-226	40S	24E	26	SENE
4303716317	26	ANETH	ANETH D-2 27	H-227	40S	24E	27	E2SENE
4303716318	23	ANETH	NAVAJO S 3	H-229	40S	24E	29	SENE
4303716319	26	ANETH	ANETH 34-D-2	H-234	40S	24E	34	CSENE
4303716320	29	ANETH	NAVAJO Q 4	H-235	40S	24E	35	SWSENE
4303716322	11A	ANETH	NAVAJO-FEDERAL 5 1	H-407	40S	24E	07	SESE
4303716323	22	ANETH	NAVAJO L 3	H-408	40S	24E	08	SESE
4303716324	21	ANETH	NAVAJO E 10	H-409	40S	24E	09	CSESE
4303716326	22	ANETH	NAVAJO L 1	H-417	40S	24E	17	SESE
4303716327	16	ANETH	NAVAJO G 2	H-418	40S	24E	18	CSESE
4303716329	18	ANETH	NAVAJO D 13	H-420	40S	24E	20	CSESE
4303716330	18	ANETH	NAVAJO D 24	H-421	40S	24E	21	SESE
4303716331	28	ANETH	NAVAJO C 28	H-424	40S	24E	24	SESE
4303716332	28	ANETH	NAVAJO C 31	H-426	40S	24E	26	SESE
4303716333	26	ANETH	INDIAN 27-D-4	H-427	40S	24E	27	CSESE
4303716335	33	ANETH	NAVAJO C 22-31	K-231	40S	25E	31	SESENW
4303716337	32	ANETH	NAVAJO 11-F	M-430	40S	25E	30	SESE
4303716421	27	ANETH	NAVAJO 14-14	E-414	40S	24E	14	NWSWSW
4303716422	27	ANETH	NAVAJO A 8	F-114	40S	24E	14	SWNENW
4303720230	25	ANETH	ANETH UNIT H-416	H-416	40S	24E	16	SESE
4303720231	18	ANETH	ANETH UNIT G-322X	G-322X	40S	24E	22	NWSE
4303730049	05	ANETH	UNIT D-412	D-412	40S	23E	12	SESESE
4303730066	21	ANETH	ANETH UNIT G-215	G-215	40S	24E	15	SESWNE
4303730093	27	ANETH	ANETH UNIT E-114	E-114	40S	24E	14	NWNWNW
4303730094	25	ANETH	ANETH UNIT E-316	E-316	40S	24E	16	NWNWSW
4303730095	18	ANETH	ANETH UNIT G-321X	G-321X	40S	24E	21	SENWSE
4303730107	25	ANETH	ANETH UNIT G-316	G-316	40S	24E	16	NENWSE
4303730112	05	ANETH	ANETH UNIT C-312	C-312	40S	23E	12	SENWSE
4303730115	08	ANETH	ANETH UNIT F-307	F-307	40S	24E	07	NWNESW
4303730117	18	ANETH	ANETH UNIT F-121	F-121	40S	24E	21	NENENW
4303730119	05	ANETH	ANETH UNIT A-113	A-113	40S	23E	13	SWNWNW
4303730122	11A	ANETH	ANETH UNIT H-307	H-307	40S	24E	07	NWNESE
4303730123	27	ANETH	ANETH UNIT H-414	H-414	40S	24E	14	SESESE
4303730131	13A	ANETH	ANETH UNIT G-218	G-218	40S	24E	18	NWSWNE
4303730132	16	ANETH	ANETH UNIT G-418	G-418	40S	24E	18	NESWSE
4303730133	18	ANETH	ANETH UNIT H-119	H-119	40S	24E	19	SENENE
4303730134	16	ANETH	ANETH UNIT E-417	E-417	40S	24E	17	NWSWSW
4303730135	18	ANETH	ANETH UNIT F-120	F-120	40S	24E	20	S2NENW
4303730136	16	ANETH	ANETH UNIT H-318	H-318	40S	24E	18	E2NESE
4303730137	08	ANETH	ANETH UNIT E-218	E-218	40S	24E	18	N2SWNW
4303730139	16	ANETH	ANETH UNIT F-317	F-317	40S	24E	17	E2NESW
4303730142	16	ANETH	ANETH UNIT E-217	E-217	40S	24E	17	W2SWNW
4303730144	16	ANETH	ANETH UNIT G-417	G-417	40S	24E	17	CSWSE
4303730150	18	ANETH	ANETH UNIT E-220	E-220	40S	24E	20	NWSWNW
4303730151	10A	ANETH	ANETH UNIT G-407	G-407	40S	24E	07	SESWSE
4303730152	22	ANETH	ANETH UNIT G-408	G-408	40S	24E	08	NWSWSE
4303730153	22	ANETH	ANETH UNIT H-117	H-117	40S	24E	17	SWNENE
4303730154	18	ANETH	ANETH UNIT H-320	H-320	40S	24E	20	NENESE
4303730155	12B	ANETH	ANETH UNIT F-118	F-118	40S	24E	18	NENENW
4303730156	22	ANETH	ANETH UNIT G-220	G-220	40S	24E	20	NWSWNE
4303730157	16	ANETH	ANETH UNIT H-118	H-118	40S	24E	18	NENENE

RECEIVED
DEC 21 2017
DIV OF OIL, GAS & MINING

4303730159	21	ANETH	ANETH UNIT E-408	E-408	40S	24E	08	SWSWSW
4303730160	16	ANETH	ANETH UNIT F-117	F-117	40S	24E	17	NWNENW
4303730162	05	ANETH	ANETH UNIT D-313	D-313	40S	23E	13	NWNESE
4303730164	18	ANETH	ANETH UNIT F-320	F-320	40S	24E	20	NWNESW
4303730165	14B	ANETH	ANETH UNIT E-418	E-418	40S	24E	18	NWSWSW
4303730166	16	ANETH	ANETH UNIT G-217	G-217	40S	24E	17	SESWNE
4303730167	18	ANETH	ANETH UNIT G-219	G-219	40S	24E	19	SESWNE
4303730168	18	ANETH	ANETH UNIT H-319	H-319	40S	24E	19	NENESE
4303730169	15A	ANETH	ANETH UNIT F-318	F-318	40S	24E	18	SWNESW
4303730173	05	ANETH	ANETH UNIT C-213	C-213	40S	23E	13	NESWNE
4303730174	05	ANETH	ANETH UNIT D-113	D-113	40S	23E	13	NENENE
4303730175	08	ANETH	ANETH UNIT E-407	E-407	40S	24E	07	SWSWSW
4303730176	21	ANETH	ANETH UNIT F-308	F-308	40S	24E	08	S2NESW
4303730177	22	ANETH	ANETH UNIT H-308	H-308	40S	24E	08	S2NESE
4303730178	21	ANETH	ANETH UNIT G-208	G-208	40S	24E	08	NESWNE
4303730181	18	ANETH	ANETH UNIT E-221	E-221	40S	24E	21	NWSWNW
4303730183	18	ANETH	ANETH UNIT H-121	H-121	40S	24E	21	NENE
4303730185	18	ANETH	ANETH UNIT F-321	F-321	40S	24E	21	W2NESW
4303730187	23	ANETH	ANETH UNIT F-129	F-129	40S	24E	29	NWNENW
4303730188	18	ANETH	ANETH UNIT E-421	E-421	40S	24E	21	CSWSW
4303730189	21	ANETH	ANETH UNIT E-409	E-409	40S	24E	09	CSWSW
4303730196	22	ANETH	ANETH UNIT H-317	H-317	40S	24E	17	NWNESE
4303730197	18	ANETH	ANETH UNIT F-119	F-119	40S	24E	19	NWNENW
4303730200	27	ANETH	ANETH UNIT E-313	E-313	40S	24E	13	SENWSW
4303730212	25	ANETH	ANETH UNIT F-216	F-216	40S	24E	16	NESENW
4303730213	21	ANETH	ANETH UNIT E-315	E-315	40S	24E	15	NWNWSW
4303730214	18	ANETH	ANETH UNIT G-421	G-421	40S	24E	21	SWSE
4303730215	18	ANETH	ANETH UNIT E-122	E-122	40S	24E	22	NWNW
4303730216	18	ANETH	ANETH UNIT H-321	H-321	40S	24E	21	NENESE
4303730217	27	ANETH	ANETH UNIT F-411	F-411	40S	24E	11	SWSESW
4303730218	27	ANETH	ANETH UNIT G-114	G-114	40S	24E	14	NWNE
4303730219	28	ANETH	ANETH UNIT E-223	E-223	40S	24E	23	S2SWNW
4303730220	28	ANETH	ANETH UNIT E-426	E-426	40S	24E	26	CSWSW
4303730221	28	ANETH	ANETH UNIT F-125	F-125	40S	24E	25	N2NENW
4303730222	28	ANETH	ANETH UNIT G-225	G-225	40S	24E	25	NWSWNE
4303730223	28	ANETH	ANETH UNIT H-123	H-123	40S	24E	23	CNENE
4303730224	32	ANETH	ANETH UNIT K-330	K-330	40S	25E	30	NENESW
4303730225	32	ANETH	ANETH UNIT M-330	M-330	40S	25E	30	NWNESE
4303730226	28	ANETH	ANETH UNIT G-223	G-223	40S	24E	23	SESWNE
4303730227	31	ANETH	ANETH UNIT H-136	H-136	40S	24E	36	E2NENE
4303730228	18	ANETH	ANETH UNIT G-420	G-420	40S	24E	20	NESWSE
4303730230	27	ANETH	ANETH UNIT G-314	G-314	40S	24E	14	SWNWSE
4303730231	28	ANETH	ANETH UNIT E-224	E-224	40S	24E	24	N2SWNW
4303730232	28	ANETH	ANETH UNIT F-326	F-326	40S	24E	26	SWNESW
4303730233	28	ANETH	ANETH UNIT E-225	E-225	40S	24E	25	SESWNW
4303730234	28	ANETH	ANETH UNIT F-323	F-323	40S	24E	23	NESW
4303730235	28	ANETH	ANETH UNIT F-123	F-123	40S	24E	23	NENW
4303730237	28	ANETH	ANETH UNIT F-325	F-325	40S	24E	25	SWNESW
4303730239	28	ANETH	ANETH UNIT H-325	H-325	40S	24E	25	NESE
4303730240	32	ANETH	ANETH UNIT J-230	J-230	40S	25E	30	CSWNW
4303730241	32	ANETH	ANETH UNIT L-230	L-230	40S	25E	30	NESWNE
4303730242	18	ANETH	ANETH UNIT H-222	H-222	40S	24E	22	SWSENE
4303730243	32	ANETH	ANETH UNIT J-430	J-430	40S	25E	30	CSWSW
4303730250	27	ANETH	ANETH UNIT F-214	F-214	40S	24E	14	SWSENW
4303730266	27	ANETH	ANETH UNIT E-314	E-314	40S	24E	14	NWSW
4303730274	27	ANETH	ANETH UNIT F-414	F-414	40S	24E	14	SWSESW
4303730297	05	ANETH	ANETH UNIT B-413	B-413	40S	23E	13	CSESW
4303730298	05	ANETH	ANETH UNIT C-413	C-413	40S	23E	13	SWSE
4303730299	05	ANETH	ANETH UNIT A-313	A-313	40S	23E	13	SWNWSW
4303730308	28	ANETH	ANETH UNIT H-125	H-125	40S	24E	25	NENE
4303730310	28	ANETH	ANETH UNIT F-126	F-126	40S	24E	26	NWNENW
4303730311	28	ANETH	ANETH UNIT G-423	G-423	40S	24E	23	CSWSE
4303730312	21	ANETH	ANETH UNIT H-315	H-315	40S	24E	15	CNESE
4303730316	28	ANETH	ANETH UNIT H-323	H-323	40S	24E	23	SENESE
4303730334	28	ANETH	ANETH UNIT G-424	G-424	40S	24E	24	CSWSE

RECEIVED
DEC 21 2017
DIV OF OIL, GAS & MINING

4303730335	18	ANETH	ANETH UNIT G-121X	G-121X	40S	24E	21	SENWNE
4303730343	28	ANETH	ANETH UNIT E-425	E-425	40S	24E	25	NESWSW
4303730344	25	ANETH	ANETH UNIT G-116	G-116	40S	24E	16	CNWNE
4303730345	18	ANETH	ANETH UNIT F-322	F-322	40S	24E	22	N2NESW
4303730346	18	ANETH	ANETH UNIT E-422	E-422	40S	24E	22	NWSWSW
4303730348	28	ANETH	ANETH UNIT H-126	H-126	40S	24E	26	W2NENE
4303730349	28	ANETH	ANETH UNIT F-324	F-324	40S	24E	24	E2NESW
4303730350	28	ANETH	ANETH UNIT E-424	E-424	40S	24E	24	SWSWSW
4303730368	28	ANETH	ANETH UNIT H-326	H-326	40S	24E	26	SENESE
4303730370	28	ANETH	ANETH UNIT E-423	E-423	40S	24E	23	SWSWSW
4303730372	28	ANETH	ANETH UNIT G-126X	G-126X	40S	24E	26	SENWNE
4303730373	18	ANETH	ANETH UNIT F-222	F-222	40S	24E	22	N2SENW
4303730374	28	ANETH	ANETH UNIT G-325X	G-325X	40S	24E	25	SENWSE
4303730375	18	ANETH	ANETH UNIT G-422	G-422	40S	24E	22	SESWSE
4303730404	22	ANETH	ANETH UNIT H-120X	H-120X	40S	24E	20	NWNENE
4303730407	18	ANETH	ANETH UNIT H-322	H-322	40S	24E	22	NWNESE
4303730409	30	ANETH	ANETH UNIT F-136	F-136	40S	24E	36	SENENW
4303730410	31	ANETH	ANETH UNIT G-236	G-236	40S	24E	36	N2SWNE
4303730412	29	ANETH	ANETH UNIT H-335	H-335	40S	24E	35	NESE
4303730413	33	ANETH	ANETH UNIT J-231	J-231	40S	25E	31	N2SWNW
4303730425	18	ANETH	ANETH UNIT G-122	G-122	40S	24E	22	NENWNE
4303730516	18	ANETH	ANETH UNIT G-221X	G-221X	40S	24E	21	NESWNE
4303730635	02	ANETH	ANETH UNIT B-214	B-214	40S	23E	14	NWSENW
4303730636	02	ANETH	ANETH UNIT C-114	C-114	40S	23E	14	SENWNE
4303730637	02	ANETH	ANETH UNIT C-314	C-314	40S	23E	14	NENWSE
4303730638	02	ANETH	ANETH UNIT D-214	D-214	40S	23E	14	SWSENE
4303730639	02	ANETH	ANETH UT D-414	D-414	40S	23E	14	CSESE
4303730643	26	ANETH	ANETH UNIT H-127	H-127	40S	24E	27	E2NENE
4303730646	32	ANETH	ANETH UNIT K-130	K-130	40S	25E	30	NENW
4303730647	33	ANETH	ANETH UNIT K-131	K-131	40S	25E	31	CNENW
4303730648	32	ANETH	ANETH UNIT L-430	L-430	40S	25E	30	CSWSE
4303730649	32	ANETH	ANETH UNIT M-130	M-130	40S	25E	30	NWNENE
4303730716	30	ANETH	ANETH UNIT E-236	E-236	40S	24E	36	NWSWNW
4303730718	26	ANETH	ANETH UNIT F-127	F-127	40S	24E	27	NWNENW
4303730728	26	ANETH	ANETH UNIT F-128	F-128	40S	24E	28	W2NENW
4303731077	12B	ANETH	ANETH UNIT E-118I	E-118SE	40S	24E	18	NESWNW
4303731381	27	ANETH	ANETH UNIT H-314X	H-314X	40S	24E	14	SENESE
4303731382	05	ANETH	ANETH UNIT D-113SE	D-113SE	40S	23E	13	NESENE
4303731383	05	ANETH	ANETH UNIT D-213I	D-213SE	40S	23E	13	NENESE
4303731385	14B	ANETH	ANETH UNIT E-218I	E-218SE	40S	24E	18	NENWSW
4303731386	08	ANETH	ANETH UNIT E-407SW	E-407SW	40S	24E	07	SWSW
4303731396	21	ANETH	ANETH UNIT E-115	E-115	40S	24E	15	N2NWNW
4303731397	21	ANETH	ANETH UNIT F-215	F-215	40S	24E	15	NESENW
4303731398	21	ANETH	ANETH UNIT F-415	F-415	40S	24E	15	NWSESW
4303731408	21	ANETH	ANETH UNIT G-315X	G-315X	40S	24E	15	S2NWSE
4303731409	25	ANETH	ANETH UNIT H-116	H-116	40S	24E	16	W2NENE
4303731529	23	ANETH	ANETH UNIT H-129	H-129	40S	24E	29	SWNENE
4303731531	29	ANETH	ANETH UNIT H-135	H-135	40S	24E	35	NWNENE
4303731537	05	ANETH	UNIT B-412	B-412	40S	23E	12	NWSESW
4303731684	27	ANETH	ANETH UNIT F-214SE	F-214SE	40S	24E	14	SESENW
4303731852	05	ANETH	AU SWD WELL	C-113 LDVL SWD	40S	23E	13	NWNE
4303750011	02	ANETH	NEW DRILL B-414	B-414	40S	23E	14	SESW
4303750036	03	ANETH	NEW DRILL C-123	C-123	40S	23E	23	NWNE
4303750037	03	ANETH	ANETH UNIT	C-223X	40S	23E	23	SWNE
4303750038	02	ANETH	ANETH UNIT A-414X	A-414X	40S	23E	14	SWSW
4303750052	31	ANETH	ANETH UNIT H-236A	H-236A (aka H-236X)	40S	24E	36	SENE
4303750054	16	ANETH	ANETH UNIT E-317X	E-317X	40S	24E	17	NWSW
4303715487	31	ANETH	NAVAJO 1	H-236	40S	24E	36	CSENE
4303715943	27	ANETH	NAVAJO A 7	G-214	40S	24E	14	SWSWNE
4303716031	02	ANETH	ARROWHEAD 8	A-414	40S	23E	14	SWSW
4303716034	01	ANETH	MESA 1	C-411	40S	23E	11	W2SWSE
4303716037	01	ANETH	MESA 2	D-311	40S	23E	11	CNESE
4303716056	29	ANETH	NAVAJO Q 3	E-135	40S	24E	35	SENWNW
4303716060	21	ANETH	NAVAJO E 15	E-308	40S	24E	08	SWNWSW
4303716061	21	ANETH	NAVAJO E 14	E-309	40S	24E	09	SWNWSW

RECEIVED
DEC 21 2017
DIV OF OIL, GAS & MINING

4303716062	16	ANETH	NAVAJO G 7	E-317	40S	24E	17	CNWSW
4303716100	10B	ANETH	NAVAJO-FEDERAL 6 1	G-307	40S	24E	07	NWSE
4303716118	09B	ANETH	NAVAJO FEDERAL 7 1	H-207	40S	24E	07	SENE
4303716125	21	ANETH	NAVAJO E 7	H-410	40S	24E	10	SESESE
4303716127	18	ANETH	NAVAJO D 22	H-422	40S	24E	22	CSESE
4303716131	32	ANETH	NAVAJO F 8	J-129	40S	25E	29	NWNW
4303716223	26	ANETH	ANETH B-2 27	F-227	40S	24E	27	CSENW
4303716228	26	ANETH	ANETH D-2-28	H-228	40S	24E	28	SESENE
4303716230	26	ANETH	ANETH 34-D-4	H-434	40S	24E	34	NESESE
4303716274	05	ANETH	BURTON 31-12	C-112	40S	23E	12	NWNE
4303716275	06	ANETH	FEDERAL 1	C-124	40S	23E	24	CNWNE
4303716276	03	ANETH	A W RICE 3	C-223	40S	23E	23	SWNE
4303716283	08	ANETH	AZTEC-ISMAY-FED 7	E-207	40S	24E	07	SWNW
4303716284	19A	ANETH	NAVAJO FED UNIT 9 1	E-208	40S	24E	08	SWNW
4303716295	27	ANETH	NAVAJO-A 12	F-311	40S	24E	11	S2NESW
4303716302	28	ANETH	NAVAJO C 4	F-426	40S	24E	26	SESW
4303716303	26	ANETH	ANETH 34-B-4	F-434	40S	24E	34	SESW
4303716304	29	ANETH	NAVAJO Q 8	F-435	40S	24E	35	SESW
4303716328	18	ANETH	NAVAJO D 27	H-419	40S	24E	19	SESE
4303716782	26	ANETH	ANETH 27-A-1	E-127	40S	24E	27	CNWNW
4303730236	28	ANETH	ANETH UNIT G-426	G-426	40S	24E	26	SWSE
4303730238	28	ANETH	ANETH UNIT G-425	G-425	40S	24E	25	SESWSE
4303730333	25	ANETH	ANETH UNIT F-416	F-416	40S	24E	16	SESW
4303730369	28	ANETH	ANETH UNIT G-226	G-226	40S	24E	26	SESWNE
4303730371	28	ANETH	ANETH UNIT E-226	E-226	40S	24E	26	CSWNW
4303730634	02	ANETH	ANETH UNIT A-114	A-114	40S	23E	14	SENWNW
4303730644	26	ANETH	ANETH UNIT H-128_REDRILL+E-127X PAIR	H-128X (fka H-128)	40S	24E	28	CNENE
4303730645	32	ANETH	ANETH UNIT J-229	J-229	40S	25E	29	W2SWNW
4303731076	05	ANETH	ANETH UNIT C-313I	C-313SE	40S	23E	13	CSE
4303731078	18	ANETH	UNIT E-121I	E-121SE	40S	24E	21	N2S2NW

RECEIVED
DEC 21 2017
DIV OF OIL, GAS & MINING

FEDERAL APPROVAL OF THIS ACTION IS NECESSARY

STATE OF UTAH
DEPARTMENT OF NATURAL RESOURCES
DIVISION OF OIL, GAS, AND MINING

FORM 9

5.LEASE DESIGNATION AND SERIAL NUMBER: UTSL 070968

SUNDRY NOTICES AND REPORTS ON WELLS

Do not use this form for proposals to drill new wells, significantly deepen existing wells below current bottom-hole depth, reenter plugged wells, or to drill horizontal laterals. Use APPLICATION FOR PERMIT TO DRILL form for such proposals.

6. IF TRIBAL, ALLOTTEE OR TRIBE NAME:

7.UNIT or CA AGREEMENT NAME: ANETH

1. TYPE OF WELL Oil Well

8. WELL NAME and NUMBER: Aneth A-414X

2. NAME OF OPERATOR: Elk Operating Services, LLC

9. API NUMBER: 43037500380000

3. ADDRESS OF OPERATOR: 1700 Lincoln Street, Suite 2550 , Denver, CO, 80203

PHONE NUMBER: 907-564-5200

9. FIELD and POOL or WILDCAT: GREATER ANETH

4. LOCATION OF WELL
FOOTAGES AT SURFACE: 788 FSL 818 FWL
QTR/QTR, SECTION, TOWNSHIP, RANGE, MERIDIAN: Qtr/Qtr: SWSW Section: 14 Township: 40S Range: 23E Meridian: S

COUNTY: SAN JUAN

STATE: UTAH

11.

CHECK APPROPRIATE BOXES TO INDICATE NATURE OF NOTICE, REPORT, OR OTHER DATA

TYPE OF SUBMISSION

- ✓ NOTICE OF INTENT
  Approximate date work will start: 1/11/2024
- ☐ SUBSEQUENT REPORT
  Date of Work Completion:
- ☐ SPUD REPORT
  Date of Spud:
- ☐ DRILLING REPORT
  Report Date:

TYPE OF ACTION

☐ ACIDIZE	☐ ALTER CASING	☐ CASING REPAIR
☐ CHANGE TO PREVIOUS PLANS	✓ CHANGE TUBING	☐ CHANGE WELL NAME
☐ CHANGE WELL STATUS	☐ COMMINGLE PRODUCING FORMATIONS	☐ CONVERT WELL TYPE
☐ DEEPEN	☐ FRACTURE TREAT	☐ NEW CONSTRUCTION
☐ OPERATOR CHANGE	☐ PLUG AND ABANDON	☐ PLUG BACK
☐ PRODUCTION START OR RESUME	☐ RECLAMATION OF WELL SITE	☐ RECOMPLETE DIFFERENT FORMATION
☐ REPERFORATE CURRENT FORMATION	☐ SIDETRACK TO REPAIR WELL	☐ TEMPORARY ABANDON
☐ TUBING REPAIR	☐ VENT OR FLARE	☐ WATER DISPOSAL
☐ WATER SHUTOFF	☐ SI TA STATUS EXTENSION	☐ APD EXTENSION
☐ WILDCAT WELL DETERMINATION	✓ OTHER	OTHER: Lift Type Conversion

12. DESCRIBE PROPOSED OR COMPLETED OPERATIONS. Clearly show all pertinent details including dates, depths, volumes, etc.

Elk Operating respectfully submits this notice of intent to convert the lifting mechanism at the AU A-414X producing well (from packer to ESP), per the following procedure: 1.MIRU Well Service Unit 2.Pull old production tubing and packer 3.Clean out to TD 4.Run new production pump and tubing 5.RDMO Well Service Unit 6.Return well to production with new lifting mechanism

Approved by the Utah Division of Oil, Gas and Mining

Date: January 16, 2024

By: Dark K Quist

NAME (PLEASE PRINT)	PHONE NUMBER	TITLE
Charles Dalton	303-861-6255	Engineering Technician

SIGNATURE	DATE
N/A	1/4/2024

RECEIVED: Jan. 04, 2024

STATE OF UTAH
DEPARTMENT OF NATURAL RESOURCES
DIVISION OF OIL, GAS, AND MINING

FORM 9

5.LEASE DESIGNATION AND SERIAL NUMBER: UTSL 070968

SUNDRY NOTICES AND REPORTS ON WELLS

Do not use this form for proposals to drill new wells, significantly deepen existing wells below current bottom-hole depth, reenter plugged wells, or to drill horizontal laterals. Use APPLICATION FOR PERMIT TO DRILL form for such proposals.

6. IF TRIBAL, ALLOTTEE OR TRIBE NAME:

7.UNIT or CA AGREEMENT NAME: ANETH

1. TYPE OF WELL: Oil Well

8. WELL NAME and NUMBER: Aneth A-414X

2. NAME OF OPERATOR: Elk Operating Services, LLC

9. API NUMBER: 43037500380000

3. ADDRESS OF OPERATOR: 1700 Lincoln Street, Suite 2550 , Denver, CO, 80203

PHONE NUMBER: 907-564-5200

9. FIELD and POOL or WILDCAT: GREATER ANETH

4. LOCATION OF WELL
FOOTAGES AT SURFACE: 788 FSL 818 FWL
QTR/QTR, SECTION, TOWNSHIP, RANGE, MERIDIAN: Qtr/Qtr: SWSW Section: 14 Township: 40S Range: 23E Meridian: S

COUNTY: SAN JUAN

STATE: UTAH

11. CHECK APPROPRIATE BOXES TO INDICATE NATURE OF NOTICE, REPORT, OR OTHER DATA

TYPE OF SUBMISSION	TYPE OF ACTION		
☐ NOTICE OF INTENT Approximate date work will start:	☐ ACIDIZE	☐ ALTER CASING	☐ CASING REPAIR
✓ SUBSEQUENT REPORT Date of Work Completion: 2/7/2024	☐ CHANGE TO PREVIOUS PLANS	✓ CHANGE TUBING	☐ CHANGE WELL NAME
☐ SPUD REPORT Date of Spud:	☐ CHANGE WELL STATUS	☐ COMMINGLE PRODUCING FORMATIONS	☐ CONVERT WELL TYPE
☐ DRILLING REPORT Report Date:	☐ DEEPEN	☐ FRACTURE TREAT	☐ NEW CONSTRUCTION
	☐ OPERATOR CHANGE	☐ PLUG AND ABANDON	☐ PLUG BACK
	☐ PRODUCTION START OR RESUME	☐ RECLAMATION OF WELL SITE	☐ RECOMPLETE DIFFERENT FORMATION
	☐ REPERFORATE CURRENT FORMATION	☐ SIDETRACK TO REPAIR WELL	☐ TEMPORARY ABANDON
	☐ TUBING REPAIR	☐ VENT OR FLARE	☐ WATER DISPOSAL
	☐ WATER SHUTOFF	☐ SI TA STATUS EXTENSION	☐ APD EXTENSION
	☐ WILDCAT WELL DETERMINATION	✓ OTHER	OTHER: Lift Type Conversion

12. DESCRIBE PROPOSED OR COMPLETED OPERATIONS. Clearly show all pertinent details including dates, depths, volumes, etc.
Elk Operating respectfully submits this subsequent sundry of a lift type change at the AU A-414X producing well, per the following procedure: 1.MIRU Well Service Unit on 01/29/2024 2.Pull old production tubing and packer 3.Clean out hard fill from 5782' to 5836' 4.Run new production pump and tubing 5.RDMO Well Service Unit on 02/07/2024 6.Return well to production on 02/09/2024

Accepted by the
Utah Division of
Oil, Gas and Mining
FOR RECORD ONLY
(This is not an approval)
March 04, 2024

NAME (PLEASE PRINT)	PHONE NUMBER	TITLE
Charles Dalton	303-861-6255	Engineering Technician
SIGNATURE: N/A		DATE: 3/4/2024

RECEIVED: Mar. 04, 2024