Inland
PRODUCTION COMPANY
A Subsidiary of Inland Resources Inc.

February 18, 2002

Ms. Lisha Cordova
State of Utah
Division of Oil, Gas and Mining
1594 West North Temple, Suite 1210
Salt Lake City, Utah 84114-5801

RE: Exceptional Spacing for the Proposed 1-31-8-18 Well

Dear Lisha:

Please find attached a copy of the well location survey plats for the above-referenced well. Inland Production Company (Inland) requests administrative approval for a location exception to Rule R649-3-2, which governs the location of wells in the State of Utah.

Due to topographic constraints on access and siting of the proposed well, it is necessary to move the location of the well in a southwesterly direction. This moves the well further into the interior of the UTU-74872 lease. There are no lease interest owners within a 460-foot radius of the new proposed location.

Please contact me if you need additional information regarding this well.

Respectfully,

Mandie Crozier

Mandie Crozier
Permit Clerk

Enclosures

Inland Production Company Field Office • Route 3, Box 3630 • Myton, UT 84052 • 435-646-3721 • FAX 435-646-3031
Corporate Office • 410 Seventeenth Street, Suite 700 • Denver, CO 80202 • 303-893-0102 • FAX 303-893-0103

FORM 3160-3
(December 1990)

SUBMIT IN TRIPLICATE*
(Other instructions on reverse side)

Form approved.
Budget Bureau No. 1004-0136
Expires December 31, 1991

UNITED STATES
DEPARTMENT OF THE INTERIOR
BUREAU OF LAND MANAGEMENT

5. LEASE DESIGNATION AND SERIAL NO.
UTU-74872

APPLICATION FOR PERMIT TO DRILL, DEEPEN, OR PLUG BACK

6. IF INDIAN, ALLOTTEE OR TRIBE NAME
N/A

1a. TYPE OF WORK DRILL [X] DEEPEN [ ]

7. UNIT AGREEMENT NAME
N/A

1b. TYPE OF WELL
OIL WELL [X] GAS WELL [ ] OTHER [ ] SINGLE ZONE [X] MULTIPLE ZONE [ ]

8. FARM OR LEASE NAME WELL NO
1-31-8-18

2. NAME OF OPERATOR
Inland Production Company

9. API WELL NO.

3. ADDRESS OF OPERATOR
Route #3 Box 3630, Myton, UT 84052 Phone: (435) 646-3721

10. FIELD AND POOL OR WILDCAT
~~Monument Butte~~ Eight mile Flat North

4. LOCATION OF WELL (Report location clearly and in accordance with any State requirements.*)
At Surface NE/NE 987' FNL 685' FEL
At proposed Prod. Zone

11. SEC., T., R., M., OR BLK. AND SURVEY OR AREA
NE/NE
Sec. 31, T8S, R18E

14. DISTANCE IN MILES AND DIRECTION FROM NEAREST TOWN OR POST OFFICE*
Approximately 20.6 miles southeast of Myton, Utah

12. County
Uintah

13. STATE
UT

15. DISTANCE FROM PROPOSED* LOCATION TO NEAREST PROPERTY OR LEASE LINE, FT.(Also to
Approx. 685' f/lse line

16. NO. OF ACRES IN LEASE
677.36

17. NO. OF ACRES ASSIGNED TO THIS WELL
40

18. DISTANCE FROM PROPOSED LOCATION* TO NEAREST WELL, DRILLING, COMPLETED, OR APPLIED FOR ON THIS LEASE, FT.
Approx. 1955'

19. PROPOSED DEPTH
6500'

20. ROTARY OR CABLE TOOLS
Rotary

21. ELEVATIONS (Show whether DF, RT, GR, etc.)
5099.6' GR

22. APPROX. DATE WORK WILL START*
1st Quarter 2002

23. PROPOSED CASING AND CEMENTING PROGRAM

SIZE OF HOLE	SIZE OF CASING	WEIGHT/FOOT	SETTING DEPTH	QUANTITY OF CEMENT
Refer to Monument Butte Field SOP's Drilling Program/Casing Design				

Inland Production Company proposes to drill this well in accordance with the attached exhibits.

The Conditions of Approval are also attached.

Federal Approval of this Action is Necessary

IN ABOVE SPACE DESCRIBE PROPOSED PROGRAM : If proposal is to deepen or plug back, give data on present productive zone and proposed new productive zone. If proposal is to drill or deepen directionally, give pertinent data on subsurface locations and measured and true vertical depths. Give blowout preventer program, if any.

24. SIGNED Mandie Crozier TITLE Permit Clerk DATE 2/1/02

(This space for Federal or State office use)

PERMIT NO. 43-047-34494 APPROVAL DATE

Application approval does not warrant or certify that the applicant holds legal or equitable title to those rights in the subject lease which would entitle the applicant to conduct operations thereon.

CONDITIONS OF APPROVAL, IF ANY:

APPROVED BY [signature] TITLE BRADLEY G. HILL ~~RECLAMATION SPECIALIST III~~ 02-21-02

*See Instructions On Reverse Side

Title 18 U.S.C. Section 1001, makes it a crime for any person knowingly and willfully to make to any department or agency of the United States any false, fictitious or fraudulent statements or representations as to any matter within its jurisdiction.

T8S, R18E, S.L.B.&M.

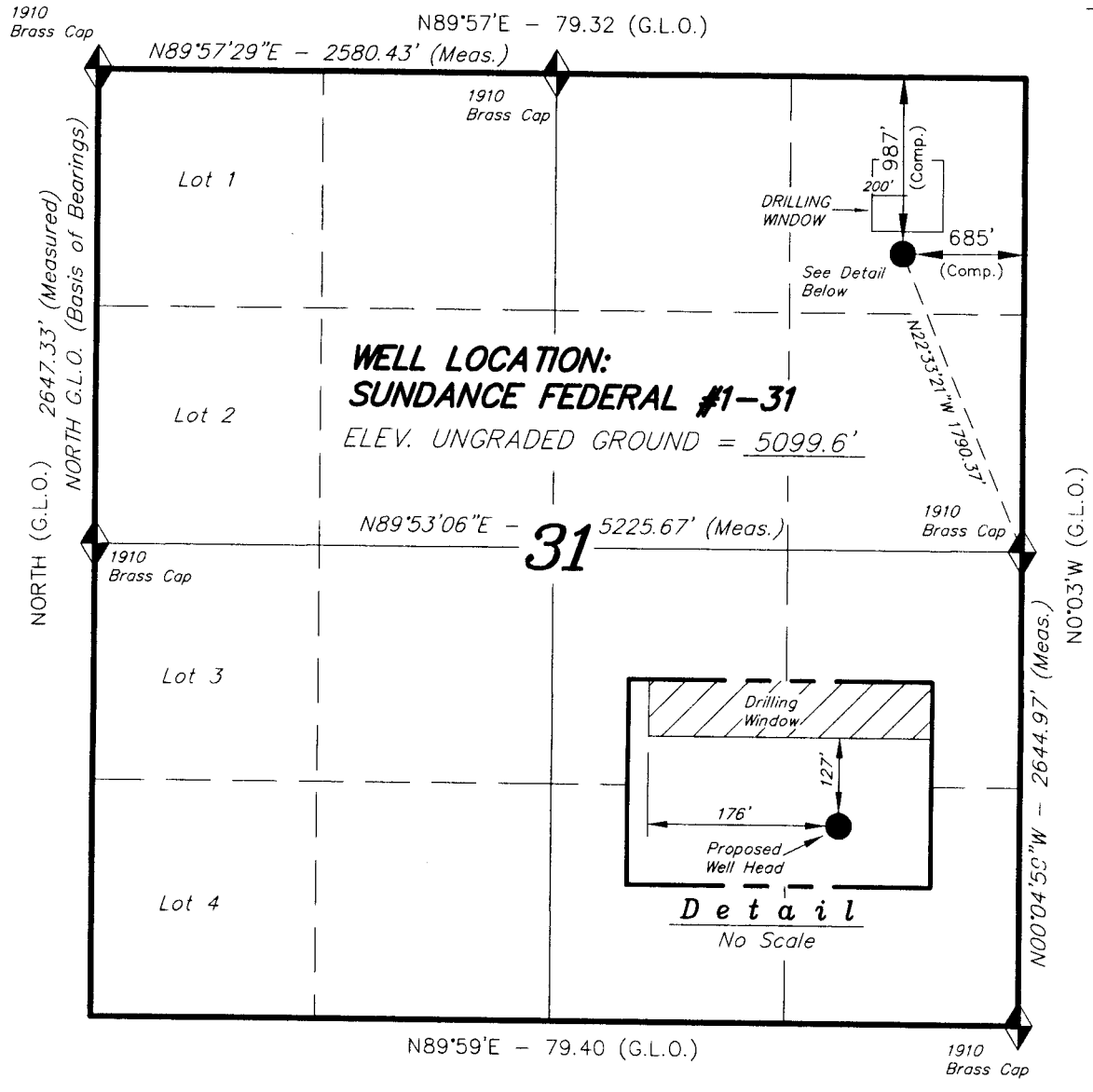

◆ = SECTION CORNERS LOCATED

BASIS OF ELEV; U.S.G.S. 7-1/2 min QUAD (PARIETTE DRAW SW)

INLAND PRODUCTION COMPANY

WELL LOCATION, SUNDANCE FEDERAL #1-31, LOCATED AS SHOWN IN THE NE 1/4 NE 1/4 OF SECTION 31, T8S, R18E, S.L.B.&M. UINTAH COUNTY, UTAH.

N

THIS IS TO CERTIFY THAT THE ABOVE PLAT WAS PREPARED FROM FIELD NOTES OF ACTUAL SURVEYS MADE BY ME OR UNDER MY SUPERVISION AND THAT THE SAME ARE TRUE AND CORRECT TO THE BEST OF MY KNOWLEDGE AND BELIEF.

REGISTERED LAND SURVEYOR
No. 189377
STACY W. STEWART
STATE OF UTAH

REGISTERED LAND SURVEYOR
REGISTRATION No. 150125
STATE OF UTAH

TRI STATE LAND SURVEYING & CONSULTING
38 WEST 100 NORTH – VERNAL, UTAH 84078
(435) 781-2501

SCALE: 1" = 1000'	SURVEYED BY: D.J.S.
DATE: 12-18-01	DRAWN BY: J.R.S.
NOTES:	FILE #

CONDITIONS OF APPROVAL
APPLICATION FOR PERMIT TO DRILL

Company/Operator: Inland Production Company

Well Name & Number: Sundance 1-31-8-18

API Number:

Lease Number: UTU-74872

Location: NE/NE Sec. 31, T8S R18E

SURFACE USE PROGRAM
CONDITIONS OF APPROVAL

CULTURAL RESOURCES
See *DIAMOND MOUNTAIN RESOURCE AREA RESOURCE MANAGEMENT PLAN AND RECORD OF DECISION* (Fall 1994).

PALEONTOLOGICAL RESOURCES
See *DIAMOND MOUNTAIN RESOURCE AREA RESOURCE MANAGEMENT PLAN AND RECORD OF DECISION* (Fall 1994).

SOILS, WATERSHEDS, AND FLOODPLAINS
See *DIAMOND MOUNTAIN RESOURCE AREA RESOURCE MANAGEMENT PLAN AND RECORD OF DECISION* (Fall 1994).

WILDLIFE AND FISHERIES
See *DIAMOND MOUNTAIN RESOURCE AREA RESOURCE MANAGEMENT PLAN AND RECORD OF DECISION* (Fall 1994).

THREATENED, ENDANGERED, AND OTHER SENSITIVE SPECIES
See *DIAMOND MOUNTAIN RESOURCE AREA RESOURCE MANAGEMENT PLAN AND RECORD OF DECISION* (Fall 1994).

LOCATION AND RESERVE PIT RECLAMATION
During construction of the reserve pit, a small amount of topsoil shall be stockpiled nearby, to be spread over the reserve pit area at the time the reserve pit is reclaimed.

The topsoil stockpile shall be reseeded immediately after site construction by broadcasting the seed, then walking the topsoil stockpile with the dozer to plant the seed.

The following seed mixture will be used on the topsoil stockpile, the recontoured surface of the reserve pit, and for final reclamation: (All poundages are in pure live seed)

Shadscale	*Atriplex confertifolia*	3 lbs/acre

Gardner saltbush	*Atriplex gardneri*	3 lbs/acre
Galletta grass	*Hilaria jamesii*	3 lbs/acre
Indian ricegrass	*Oryzopsis hymenoides*	3 lbs/acre

The reserve pit shall be reclaimed immediately after drilling operations have ceased. The pit shall be reclaimed by: 1) removing all liquids and any oily debris according to Utah Division of Oil, Gas, & Mining pit closure rules; 2) perforating and folding the liner in place (if a pit liner is used); 3) recontouring the surface; 4) broadcasting the seed over the recontoured surface; and 5) walking the surface of the pit with a dozer to plant the seed.

At the time of final abandonment, the location and access will be recontoured to natural topography and topsoil spread over the area and the surface seeded immediately.

PIPELINES

Installation of a surface gas pipeline and/or any subsequent buried gas or water pipelines will follow the conditions of approval outlined above.

Except as specified in the APD, the installation of the surface gas line and any subsequent buried pipelines will follow the edge of the existing roadways without interfering with the normal travel and maintenance of the roadway.

The installation of any buried pipelines will disturb as little surface as possible and will not exceed 60 feet in width. Reclamation of the disturbance area associated with buried pipelines will be completed within 10 days after installation. The surface will be recontoured to natural or near natural contours. Reseeding will be with the same seed mixture specified for reclamation of the reserve pit and well site. The interface of the buried line disturbance area and the edge of any adjacent access roads will be constructed with a borrow ditch and road berm to minimize vehicular travel along the water line route.

INLAND PRODUCTION COMPANY
SUNDANCE #1-31-8-18
NE/NE SECTION 31, T8S, R18E
UINTAH COUNTY, UTAH

ONSHORE ORDER NO. 1

DRILLING PROGRAM

1. ***GEOLOGIC SURFACE FORMATION:***

Uinta formation of Upper Eocene Age

2. ***ESTIMATED TOPS OF IMPORTANT GEOLOGIC MARKERS:***

Uinta	0' – 1640'
Green River	1640 '
Wasatch	6500'

3. ***ESTIMATED DEPTHS OF ANTICIPATED WATER, OIL, GAS OR MINERALS:***

Green River Formation 1640' – 6500' - Oil

4. ***PROPOSED CASING PROGRAM***

Please refer to the Monument Butte Field Standard Operation Procedure (SOP).

5. ***MINIMUM SPECIFICATIONS FOR PRESSURE CONTROL:***

Please refer to the Monument Butte Field SOP. See Exhibit "C".

6. ***TYPE AND CHARACTERISTICS OF THE PROPOSED CIRCULATION MUDS:***

Please refer to the Monument Butte Field SOP.

7. ***AUXILIARY SAFETY EQUIPMENT TO BE USED:***

Please refer to the Monument Butte Field SOP.

8. ***TESTING, LOGGING AND CORING PROGRAMS:***

Please refer to the Monument Butte Field SOP.

9. ***ANTICIPATED ABNORMAL PRESSURE OR TEMPERATURE:***

The anticipated maximum bottom hole pressure is 2000 psi. It is not anticipated that abnormal temperatures will be encountered.

10. ***ANTICIPATED STARTING DATE AND DURATION OF THE OPERATIONS:***

Please refer to the Monument Butte Field SOP.

INLAND PRODUCTION COMPANY
SUNDANCE #1-31-8-18
NE/NE SECTION 31, T8S, R18E
UINTAH COUNTY, UTAH

ONSHORE ORDER NO. 1

MULTI-POINT SURFACE USE & OPERATIONS PLAN

1. ***EXISTING ROADS***

See attached Topographic Map "A"

To reach Inland Production Company well location site Sundance #1-31-8-18 located in the NE 1/4 NE 1/4 Section 31, T8S, R18E, Uintah County, Utah:

Proceed southwesterly out of Myton, Utah along Highway 40 - 1.6 miles ± to the junction of this highway and UT State Hwy 53; proceed southeasterly along Hwy 53 – 13.8 miles ± to it's junction with an existing road to the north; proceed northerly – 0.3 miles ± to it's junction with an existing road to the northeast; proceed northeasterly – 4.9 miles ± to it's junction with the beginning of the proposed access road; proceed easterly along the proposed access road 2740' ± to the proposed well location.

2. ***PLANNED ACCESS ROAD***

See Topographic Map "B" for the location of the proposed access road.

3. ***LOCATION OF EXISTING WELLS***

Refer to Exhibit "B".

4. ***LOCATION OF EXISTING AND/OR PROPOSED FACILITIES***

Please refer to the Monument Butte Field Standard Operating Procedure (SOP).

5. ***LOCATION AND TYPE OF WATER SUPPLY***

Please refer to the Monument Butte Field SOP. See Exhibit "A".

6. ***SOURCE OF CONSTRUCTION MATERIALS***

Please refer to the Monument Butte Field SOP.

7. ***METHODS FOR HANDLING WASTE DISPOSAL***

Please refer to the Monument Butte Field SOP.

8. ***ANCILLARY FACILITIES***

Please refer to the Monument Butte Field SOP.

9. ***WELL SITE LAYOUT***

The attached Location Layout Diagram describes drill pad cross-sections, cuts and fills, and locations of the mud tanks, reserve pit, pipe racks, trailer parking, spoil dirt stockpile(s), and surface material stockpile(s).

10. ***PLANS FOR RESTORATION OF SURFACE***

Please refer to the Monument Butte Field SOP.

11. ***SURFACE OWNERSHIP*** - Bureau Of Land Management

12. ***OTHER ADDITIONAL INFORMATION***

Archaeological Resource Survey for this area is attached.

The Paleontological Resource Survey will be forthcoming.

Inland Production Company requests a 60' ROW for the Sundance #1-31-8-18 to allow for construction of a 6" gas gathering line, and a 3" poly fuel gas line. Both lines will tie in to the existing pipeline infrastructure. **Refer to Topographic Map "C."**

Inland Production Company also requests a 60' ROW be granted for the Sundance #1-31-8-18 to allow for construction of a 3" steel water injection line and a 3" poly water return line. **Refer to Topographic Map "C."**

Water Disposal
Formation water is produced to a steel storage tank. If the production water meets quality guidelines, it is transported to the Ashley, Monument Butte, Jonah, and Beluga water injection facilities by company or contract trucks. Subsequently, the produced water is injected into approved Class II wells to enhance Inland's secondary recovery project.

Water not meeting quality criteria, is disposed at Inland's Pariette #4 disposal well (Sec. 7, T9S R19E) or at State of Utah approved surface disposal facilities.

13. ***LESSEE'S OR OPERATORS REPRESENTATIVE AND CERTIFICATION***

Representative

Name: Brad Mecham

Address: Route #3 Box 3630
Myton, UT 84052

Telephone: (435) 646-3721

Certification

Please be advised that INLAND PRODUCTION COMPANY is considered to be the operator of well #1-31-8-18 NE/NE Section 31, Township 8S, Range 18E: Lease UTU-74872 Uintah County, Utah: and is responsible under the terms and conditions of the lease for the operations conducted upon the leased lands. Bond coverage is provided by Hartford Accident #4488944.

I hereby certify that the proposed drillsite and access route have been inspected, and I am familiar with the conditions which currently exist; that the statements made in this plan are true and correct to the best of my knowledge; and that the work associated with the operations proposed here will be performed by Inland Production Company and its contractors and

subcontractors in conformity with this plan and the terms and conditions under which it is approved. This statement is subject to the provisions of 18 U.S.C. 1001 for the filing of a false statement.

2/1/08
Date

Mandie Crozier
Mandie Crozier
Permit Clerk

INLAND PRODUCTION COMPANY

SUNDANCE FEDERAL #1-31

SEC. 31, T8S, R18E, S.L.B.&M.

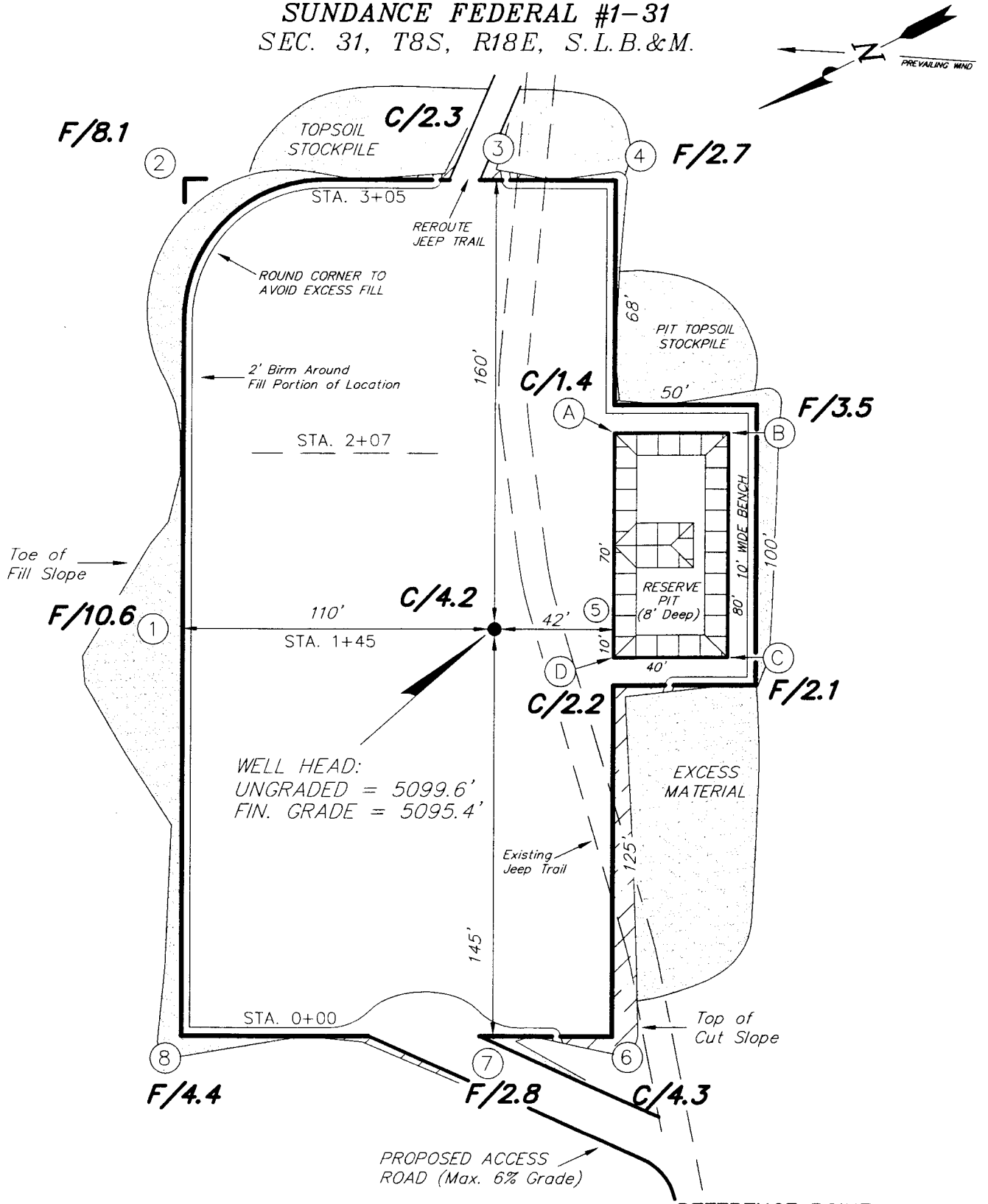

REFERENCE POINTS

210' SOUTHEAST = 5097.5'

260' SOUTHEAST = 5095.2'

SURVEYED BY: D.J.S.	SCALE: 1" = 50'	Tri State Land Surveying, Inc.	(435) 781-2501
DRAWN BY: J.R.S.	DATE: 12-19-01	38 WEST 100 NORTH VERNAL, UTAH 84078	

INLAND PRODUCTION COMPANY

CROSS SECTIONS

SUNDANCE FEDERAL #1-31

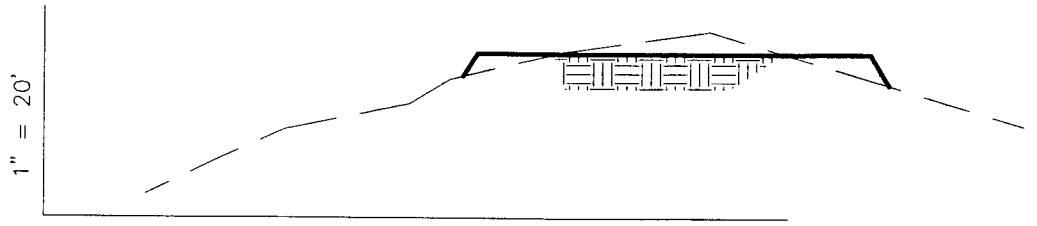

STA. 3+05

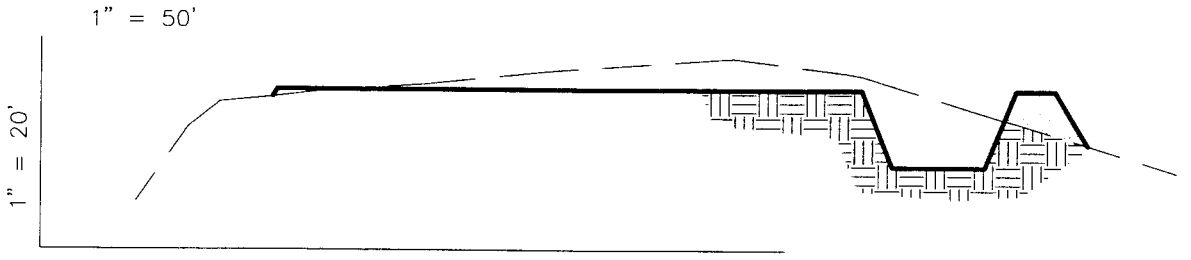

STA. 2+07

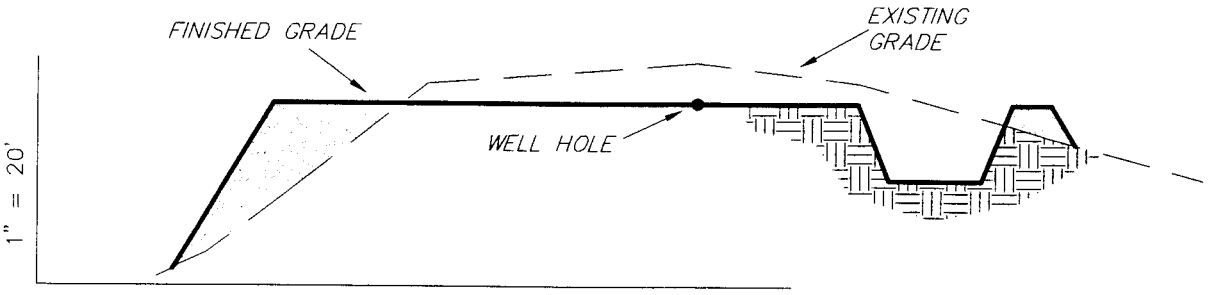

STA. 1+45

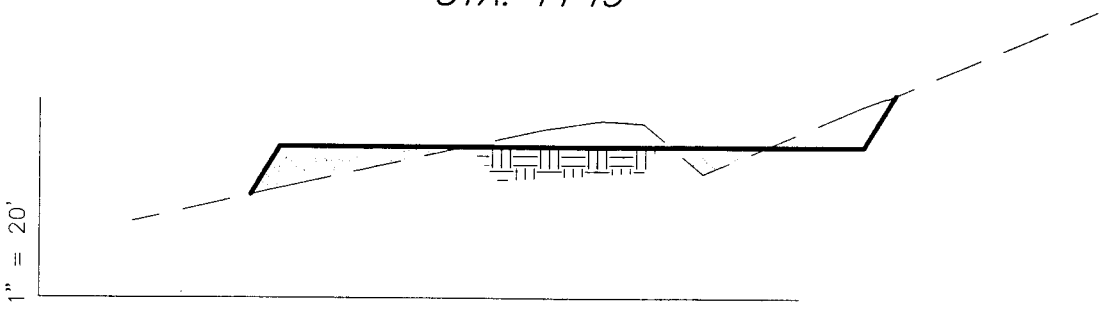

STA. 0+00

NOTE:
UNLESS OTHERWISE NOTED
ALL CUT/FILL SLOPES ARE
AT 1.5:1

ESTIMATED EARTHWORK QUANTITIES
(Expressed in Cubic Yards)

ITEM	CUT	FILL	6" TOPSOIL	EXCESS
PAD	2,860	2,860	Topsoil is not included in Pad Cut	0
PIT	640	0		640
TOTALS	3,500	2,860	1,010	640

SURVEYED BY: D.J.S.	SCALE: 1" = 50'	Tri State Land Surveying, Inc.	(435) 781-2501
DRAWN BY: J.R.S.	DATE: 12-19-01	38 WEST 100 NORTH VERNAL, UTAH 84078	

INLAND PRODUCTION COMPANY

TYPICAL RIG LAYOUT

SUNDANCE FEDERAL #1-31

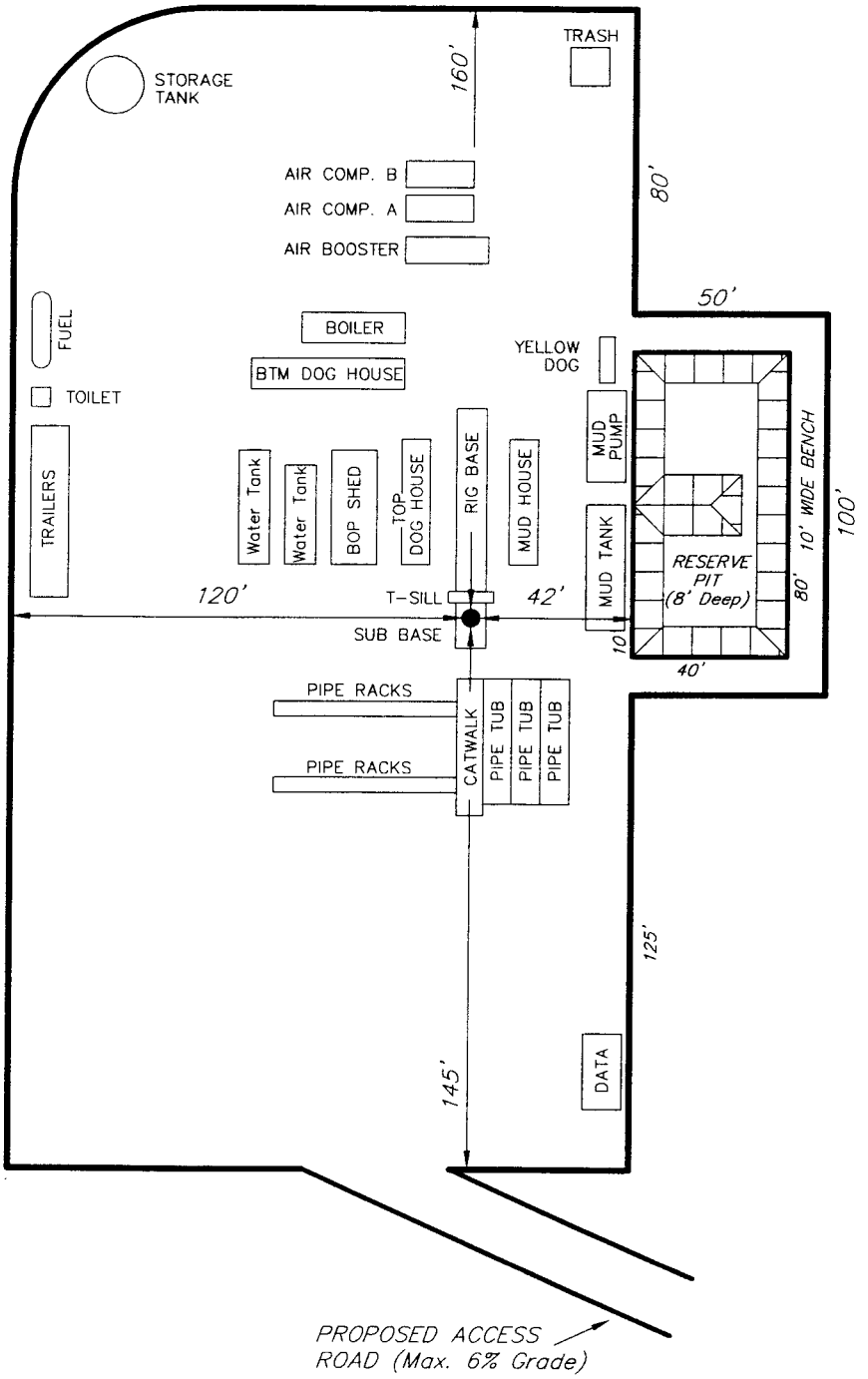

SURVEYED BY:	D.J.S.	SCALE:	1" = 50'	Tri State Land Surveying, Inc. (435) 781-2501
DRAWN BY:	J.R.S.	DATE:	12-19-01	38 WEST 100 NORTH VERNAL, UTAH 84078

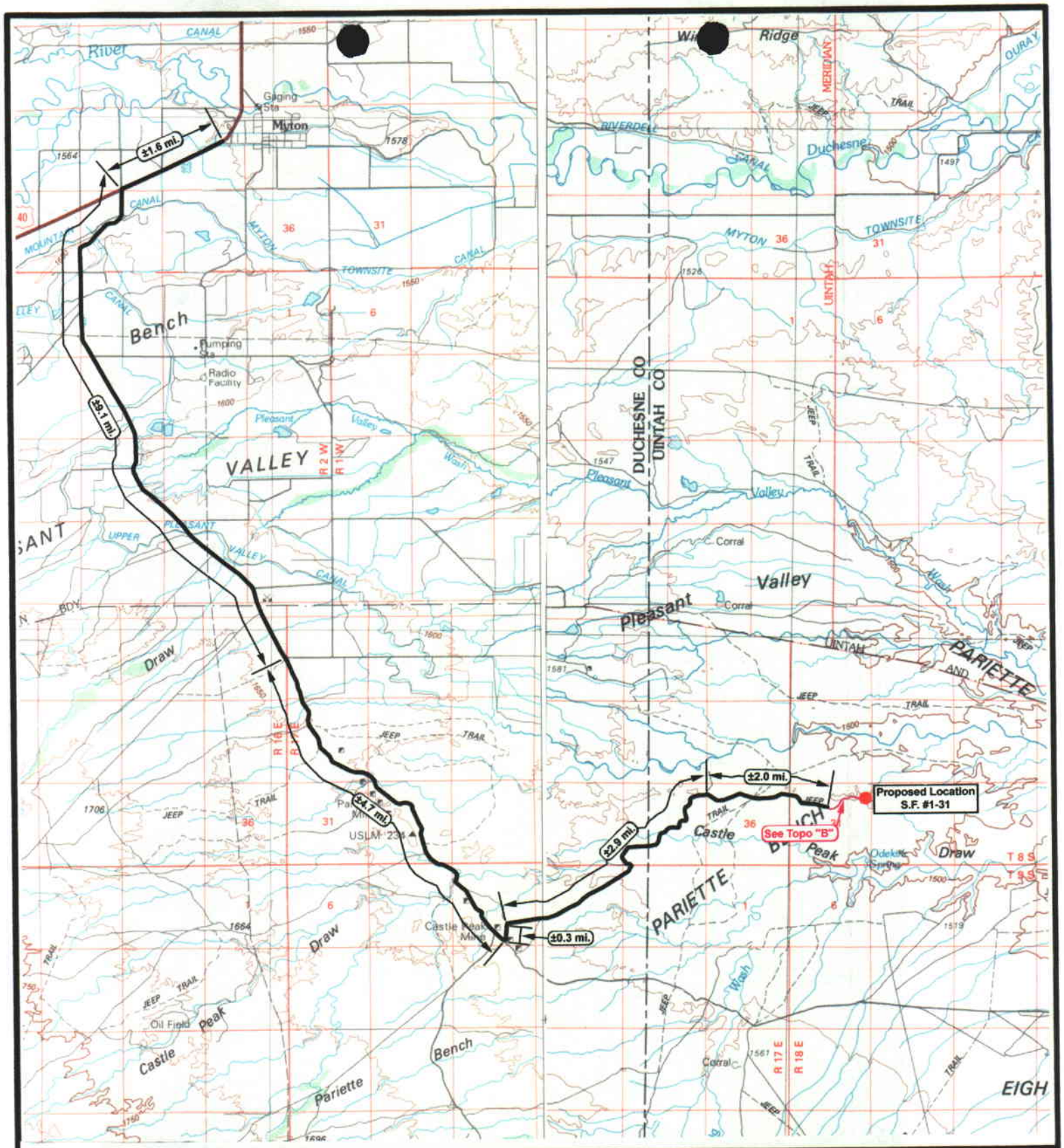

Inland RESOURCES INC.

Sundance Federal #1-31
SEC. 31, T8S, R18E, S.L.B.&M.

N

Tri-State Land Surveying Inc.
(435) 781-2501
38 West 100 North Vernal, Utah 84078

SCALE: 1" = 100,000'
DRAWN BY: D.J.
DATE: 12-24-2001

Legend

Existing Road
Proposed Access

TOPOGRAPHIC MAP
"A"

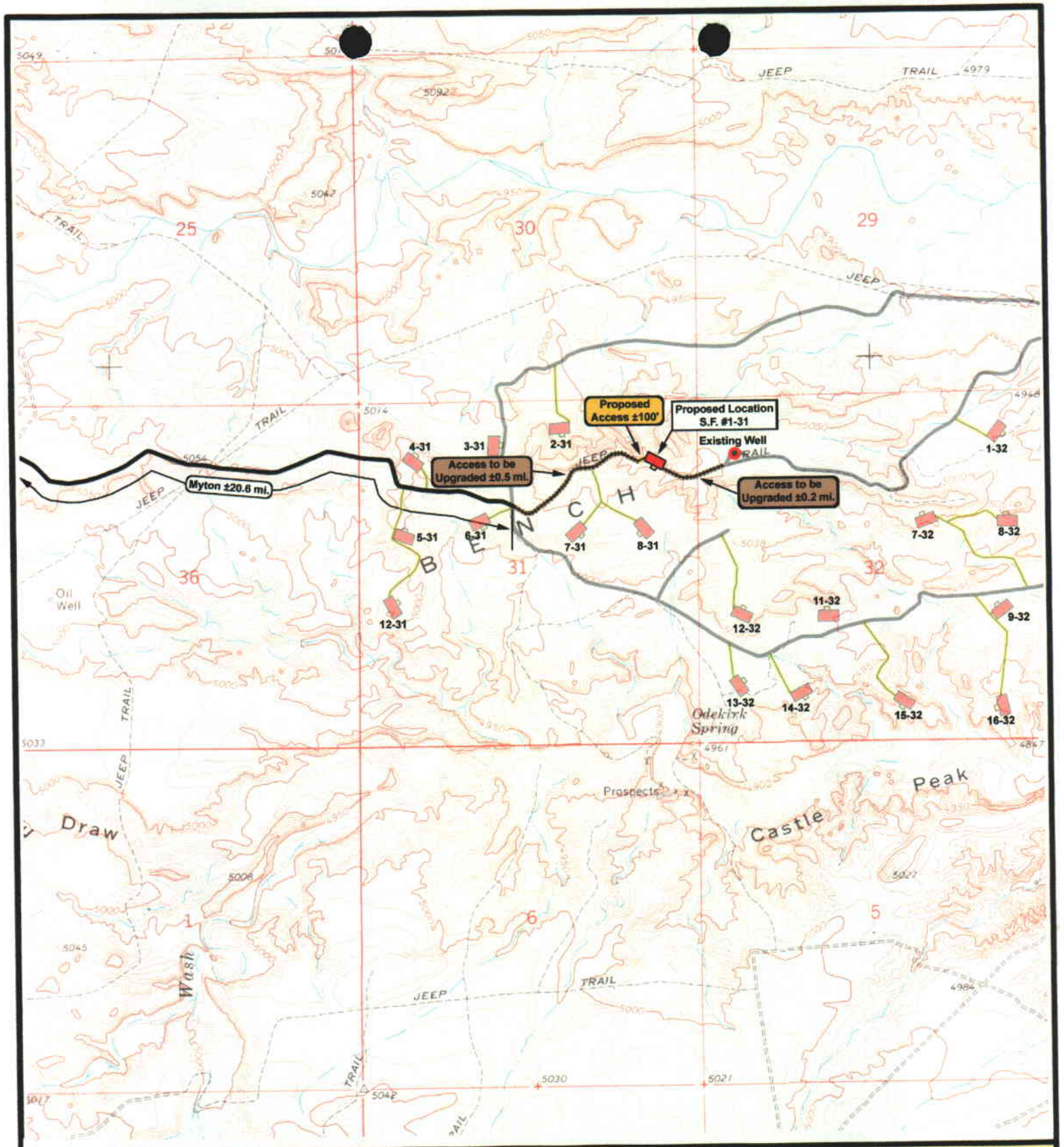

Inland RESOURCES INC.

Sundance Federal #1-31
SEC. 31, T8S, R18E S.L.B.&M.

N

Tri-State Land Surveying Inc.
(435) 781-2501
38 West 100 North Vernal, Utah 84078

SCALE: 1" = 2000'
DRAWN BY: D.J.
DATE: 12-20-2001

Legend

- Existing Road
- Proposed Access
- Access to be Upgraded

TOPOGRAPHIC MAP

"B"

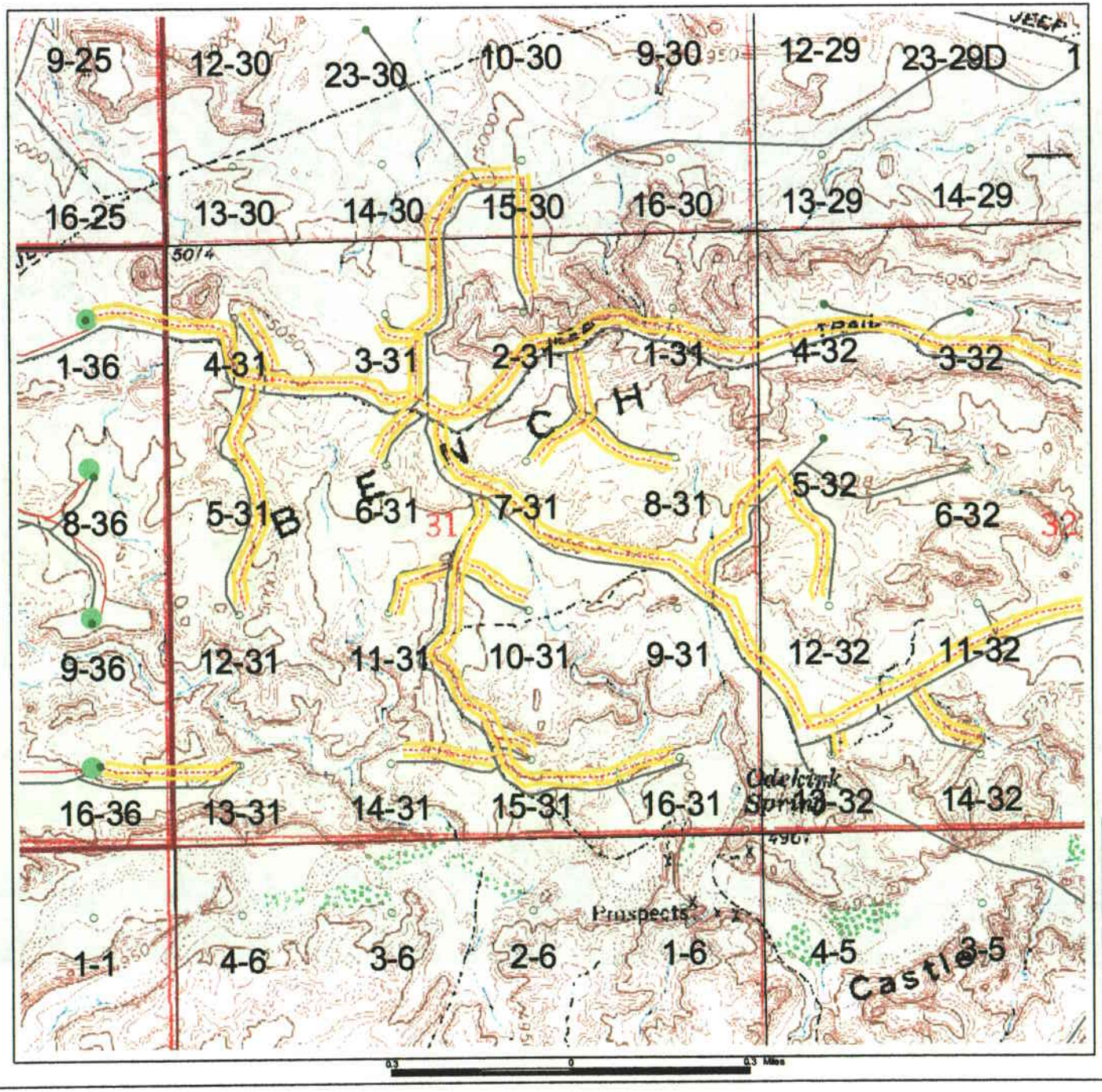

Gas Line ROW

Pending Approval

ROW Approved

Compressor Stations

Gas Pipelines

10"

6" Source Line

6" Proposed

4" Source Line

4" Proposed

Gas Buried

Petroglyph Gas Line

Questar Gas Line

Compressors - Other

Fuel Gas Meters

Roads (Digitized)

Paved

Dirt

Proposed

Two Track

Private

N

Topographic Map C
T8S-R18E-31

Gas Pipeline Map

UINTA BASIN, UTAH

Duchesne & Uintah Counties, Utah

January 24, 2002

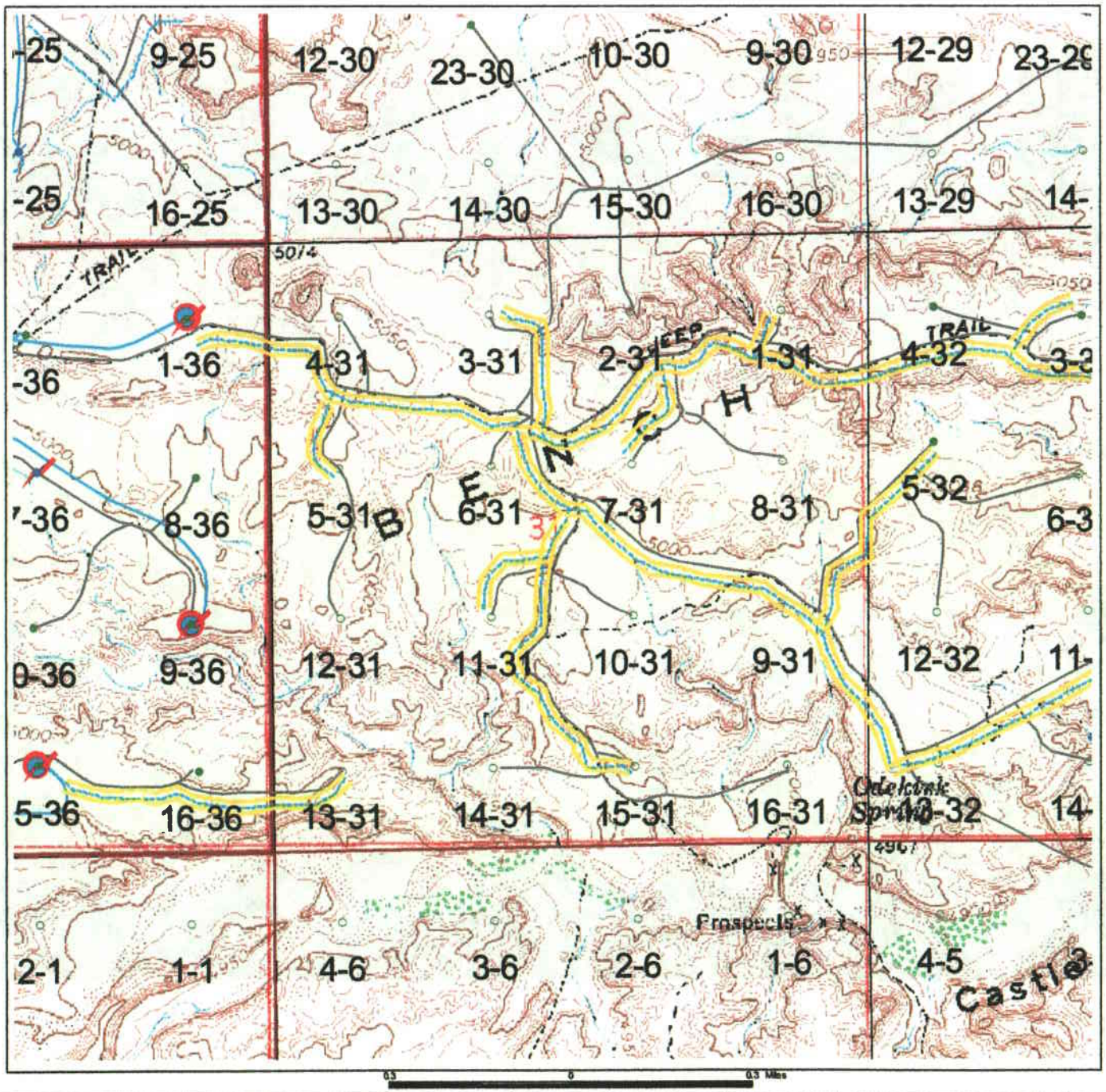

Water Taps

2001 Injection Conversion Program

Waterline ROW

Pending Approval

ROW Approved

Water Injection Permits

Pending Approval

Permit Approved

Water Source 6 Inch
Water Source 4 Inch
Water 4 Inch - High Pressure
Water 4 Inch Poly
Water High Pressure 2 to 3 Inch
Proposed High Pressure Water
Injection Stations
Pump Stations

Roads (Digitized)
Paved
Dirt
Proposed
Two Track
Private

N

Topographic Map C
T8S-R18E-31

Water Pipeline Map

UINTA BASIN, UTAH

Duchesne & Uintah Counties, Utah

January 24, 2002

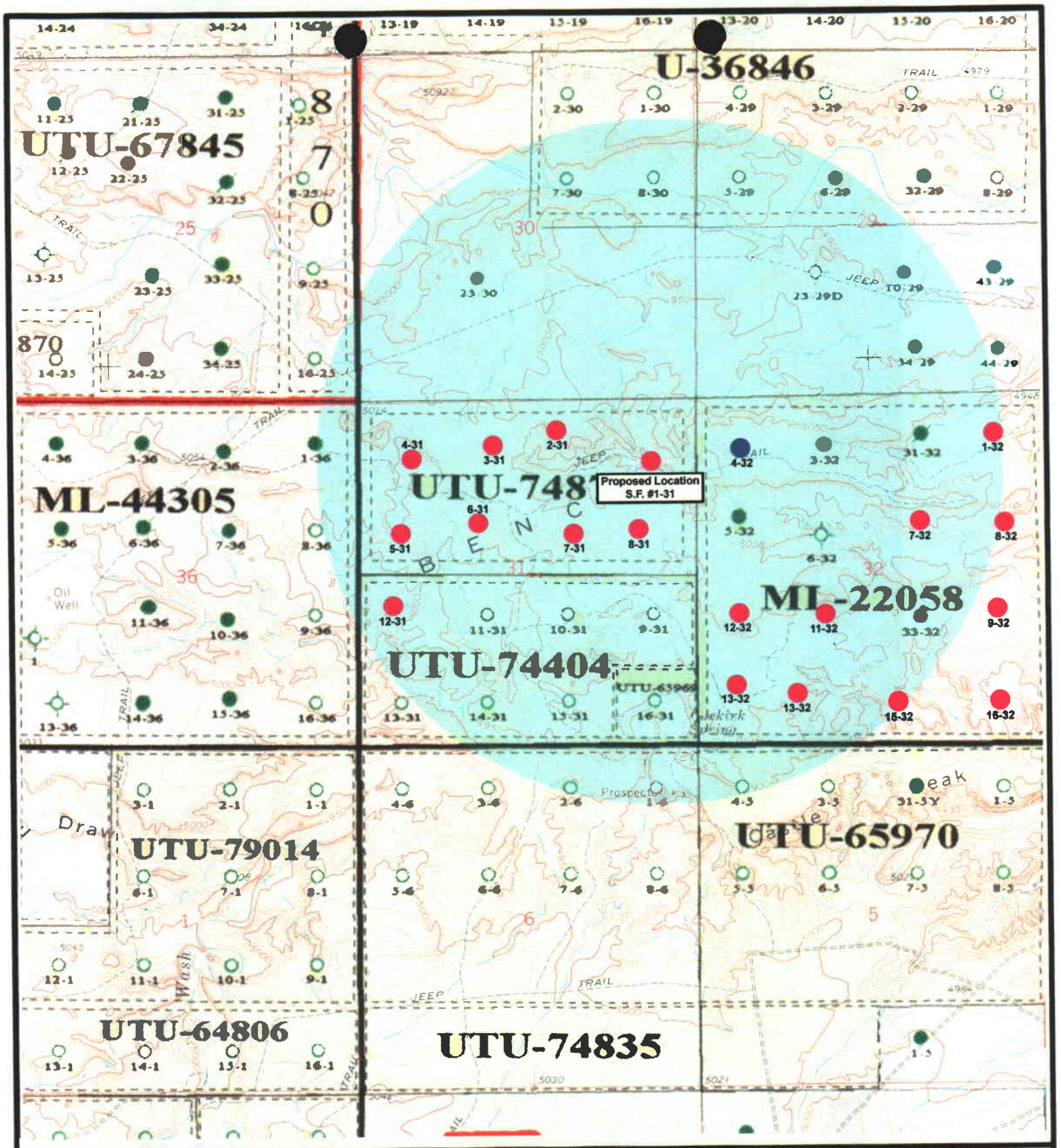

Inland RESOURCES INC.

Tri-State Land Surveying Inc.
(435) 781-2501
38 West 100 North Vernal, Utah 84078

SCALE: 1" = 2000'
DRAWN BY: D.J.
DATE: 12-26-2001

Sundance Federal #1-31
SEC. 31, T8S. R18E, S.L.B.&M.

Exhibit "B"

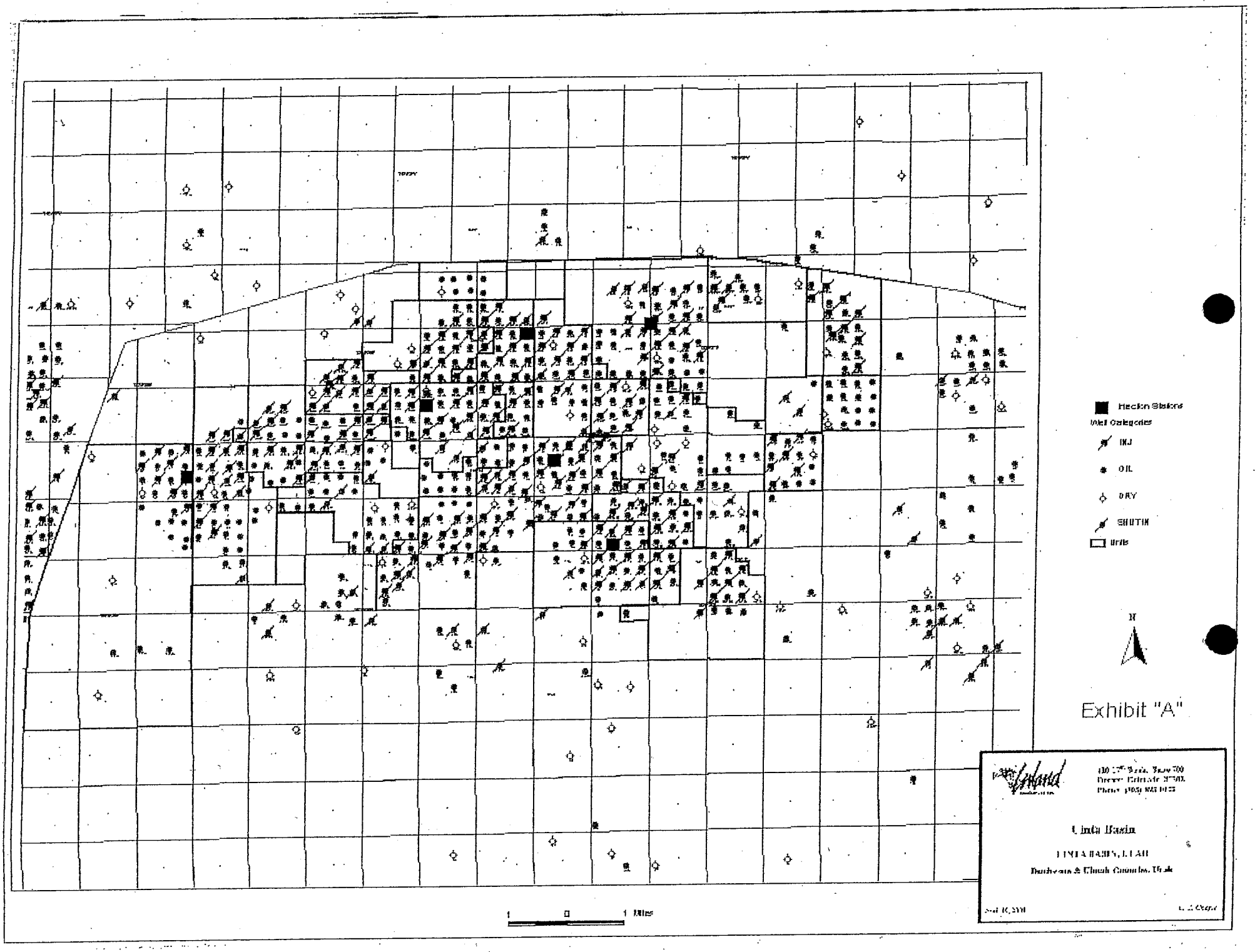
Hecker Stations
Well Categories
INJ
OIL
DRY
SHUTIN
Units
N
Exhibit "A"
Uinta Basin
UINTA BASIN, UTAH
Duchesne & Uinta Counties, Utah
1 0 1 Miles

RAM TYPE B.O.P.
Make:
Size:
Model:

2-M SYSTEM

EXHIBIT "C"

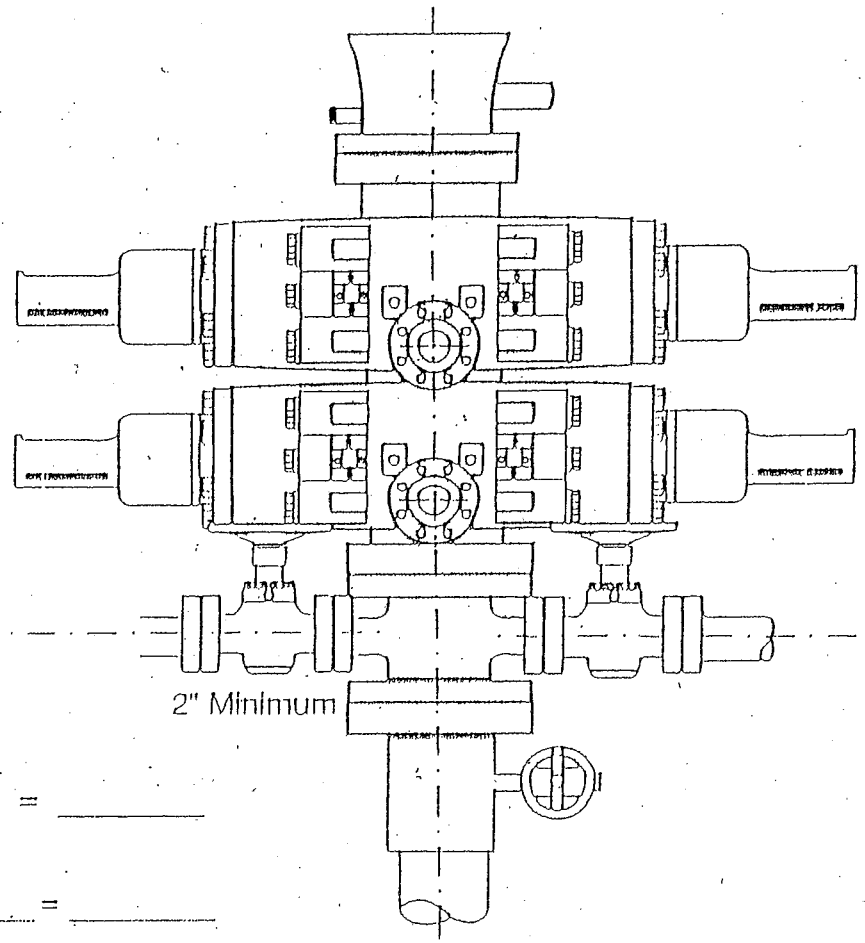

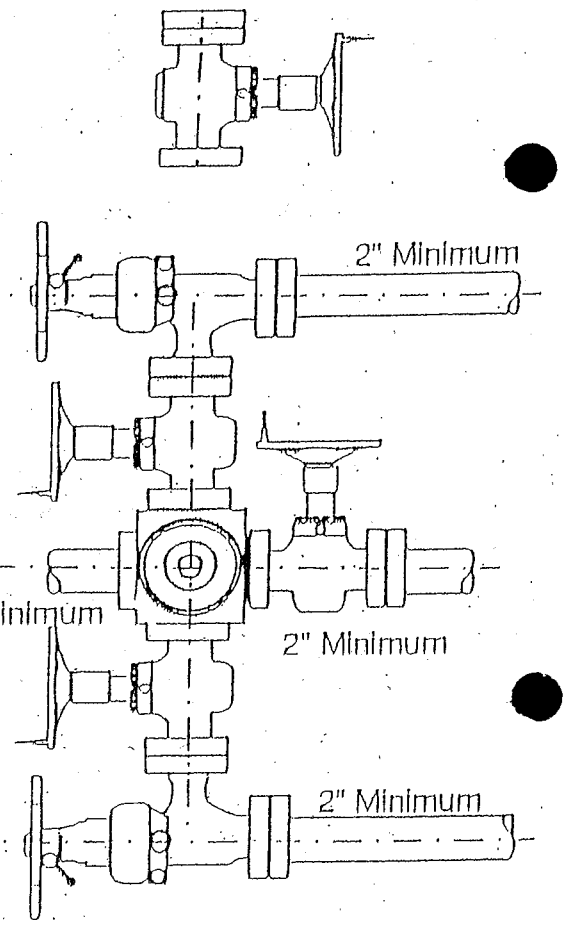

GAL TO CLOSE

Annular BOP = _____

Ramtype BOP

____ Rams x _____ = _____

= _____ Gal.

_____ x 2 = _____ Total Gal.

Rounding off to the next higher increment of 10 gal. would require

____ Gal. (total fluid & nitro volume)

UO

WORKSHEET
APPLICATION FOR PERMIT TO DRILL

APD RECEIVED: 02/04/2002

API NO. ASSIGNED: 43-047-34494

WELL NAME: SUNDANCE FED 1-31-8-18

OPERATOR: INLAND PRODUCTION (N5160)

CONTACT: MANDIE CROZIER

PHONE NUMBER: 435-646-3721

PROPOSED LOCATION:

NENE 31 080S 180E

SURFACE: 0987 FNL 0685 FEL

BOTTOM: 0987 FNL 0685 FEL

UINTAH

8 MILE FLAT NORTH (590)

LEASE TYPE: 1 - Federal

LEASE NUMBER: UTU-74872

SURFACE OWNER: 1 - Federal

PROPOSED FORMATION: GRRV

INSPECT LOCATN BY: / /

Tech Review	Initials	Date
Engineering		
Geology		
Surface		

RECEIVED AND/OR REVIEWED:

✓ Plat

✓ Bond: Fed[1] Ind[] Sta[] Fee[]
(No. 4488944)

N Potash (Y/N)

N Oil Shale 190-5 (B) or 190-3 or 190-13

✓ Water Permit
(No. MUNICIPAL)

N RDCC Review (Y/N)
(Date:)

N/A Fee Surf Agreement (Y/N)

LOCATION AND SITING:

___ R649-2-3. Unit ___

___ R649-3-2. General
Siting: 460 From Qtr/Qtr & 920' Between Wells

✓ R649-3-3. Exception

___ Drilling Unit
Board Cause No: ___
Eff Date: ___
Siting: ___

___ R649-3-11. Directional Drill

COMMENTS: Mon. Butte Field SOP, separate file.
Need "Ex Loc" info. (Rec'd 2-21-02)

STIPULATIONS: 1-Fed. Approval
2-Spacing Stip.

Utah Oil Gas and Mining

OPERATOR: INLAND PROD CO (N5160)

SEC. 31, T8S, R18E

FIELD: EIGHT MILE FLAT NORTH (590)

COUNTY: UINTAH

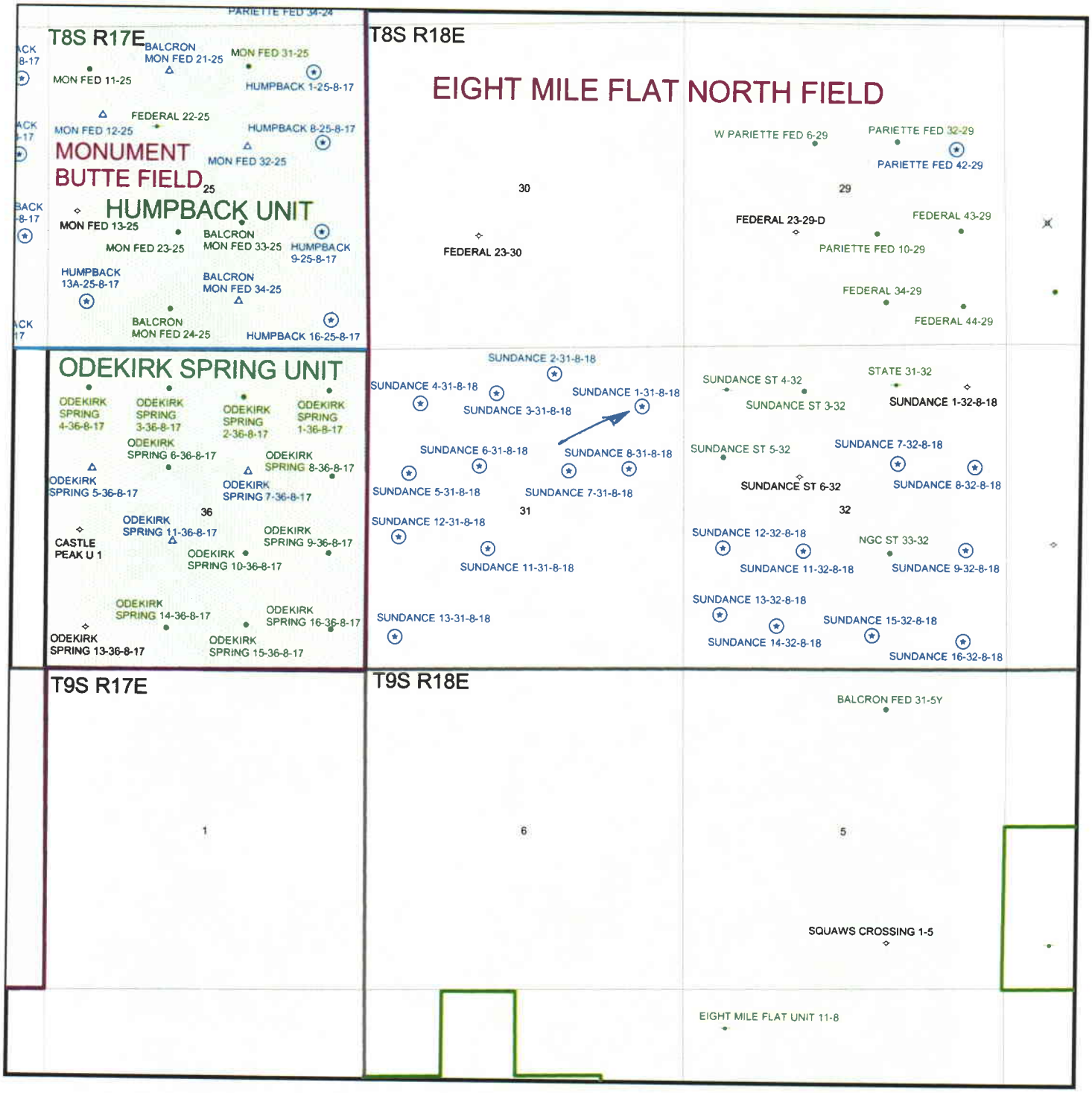

PREPARED BY: LCORDOVA
DATE: 13-FEBRUARY-2002

Michael O. Leavitt
Governor
Kathleen Clarke
Executive Director
Lowell P. Braxton
Division Director

State of Utah

DEPARTMENT OF NATURAL RESOURCES
DIVISION OF OIL, GAS AND MINING

1594 West North Temple, Suite 1210
PO Box 145801
Salt Lake City, Utah 84114-5801
801-538-5340
801-359-3940 (Fax)
801-538-7223 (TDD)

February 21, 2002

Inland Production Company
Route 3 Box 3630
Myton UT 84052

Re: Sundance Federal 1-31-8-18 Well, 987' FNL, 685' FEL, NE NE, Sec. 31, T. 8 South, R. 18 East, Uintah County, Utah

Gentlemen:

Pursuant to the provisions and requirements of Utah Code Ann.§ 40-6-1 *et seq.*, Utah Administrative Code R649-3-1 *et seq.*, and the attached Conditions of Approval, approval to drill the referenced well is granted.

Appropriate information has been submitted to DOGM and administrative approval of the requested exception location is hereby granted.

This approval shall expire one year from the above date unless substantial and continuous operation is underway, or a request for extension is made prior to the expiration date. The API identification number assigned to this well is 43-047-34494.

Sincerely,

John R. Baza
Associate Director

er
Enclosures
cc: Uintah County Assessor
Bureau of Land Management, Vernal District Office

Operator: Inland Production Company

Well Name & Number Sundance Federal 1-31-8-18

API Number: 43-047-34494

Lease: UTU-74872

Location: NE NE **Sec.** 31 **T.** 8 South **R.** 18 East

Conditions of Approval

1. General

   Compliance with the requirements of Utah Admin. R. 649-1 *et seq.*, the Oil and Gas Conservation General Rules, and the applicable terms and provisions of the approved Application for permit to drill.

2. Notification Requirements

   Notify the Division within 24 hours of spudding the well.

   - Contact Carol Daniels at (801) 538-5284.

   Notify the Division prior to commencing operations to plug and abandon the well.

   - Contact Dan Jarvis at (801) 538-5338

3. Reporting Requirements

   All required reports, forms and submittals will be promptly filed with the Division, including but not limited to the Entity Action Form (Form 6), Report of Water Encountered During Drilling (Form 7), Weekly Progress Reports for drilling and completion operations, and Sundry Notices and Reports on Wells requesting approval of change of plans or other operational actions.

4. State approval of this well does not supersede the required federal approval, which must be obtained prior to drilling.

5. This proposed well is located in an area for which drilling units (well spacing patterns) have not been established through an order of the Board of Oil, Gas and Mining (the "Board"). In order to avoid the possibility of waste or injury to correlative rights, the operator is requested, once the well has been drilled, completed, and has produced, to analyze geological and engineering data generated therefrom, as well as any similar data from surrounding areas if available. As soon as is practicable after completion of its analysis, and if the analysis suggests an area larger than the quarter-quarter section upon which the well is located is being drained, the operator is requested to seek an appropriate order from the Board establishing drilling and spacing units in conformance with such analysis by filing a Request for Agency Action with the Board.

Inland
PRODUCTION COMPANY
A Subsidiary of Inland Resources Inc.

February 18, 2002

Ms. Lisha Cordova
State of Utah
Division of Oil, Gas and Mining
1594 West North Temple, Suite 1210
Salt Lake City, Utah 84114-5801

RE: Exceptional Spacing for the Proposed 1-31-8-18 Well

Dear Lisha:

Please find attached a copy of the well location survey plats for the above-referenced well. Inland Production Company (Inland) requests administrative approval for a location exception to Rule R649-3-2, which governs the location of wells in the State of Utah.

Due to topographic constraints on access and siting of the proposed well, it is necessary to move the location of the well in a southwesterly direction. This moves the well further into the interior of the UTU-74872 lease. There are no lease interest owners within a 460-foot radius of the new proposed location.

Please contact me if you need additional information regarding this well.

Respectfully,

Mandie Crozier

Mandie Crozier
Permit Clerk

Enclosures

RECEIVED
FEB 21 2002
DIVISION OF
OIL, GAS AND MINING

Inland Production Company Field Office • Route 3, Box 3630 • Myton, UT 84052 • 435-646-3721 • FAX 435-646-3031
Corporate Office • 410 Seventeenth Street, Suite 700 • Denver, CO 80202 • 303-893-0102 • FAX 303-893-0103

T8S, R18E, S.L.B.&M.

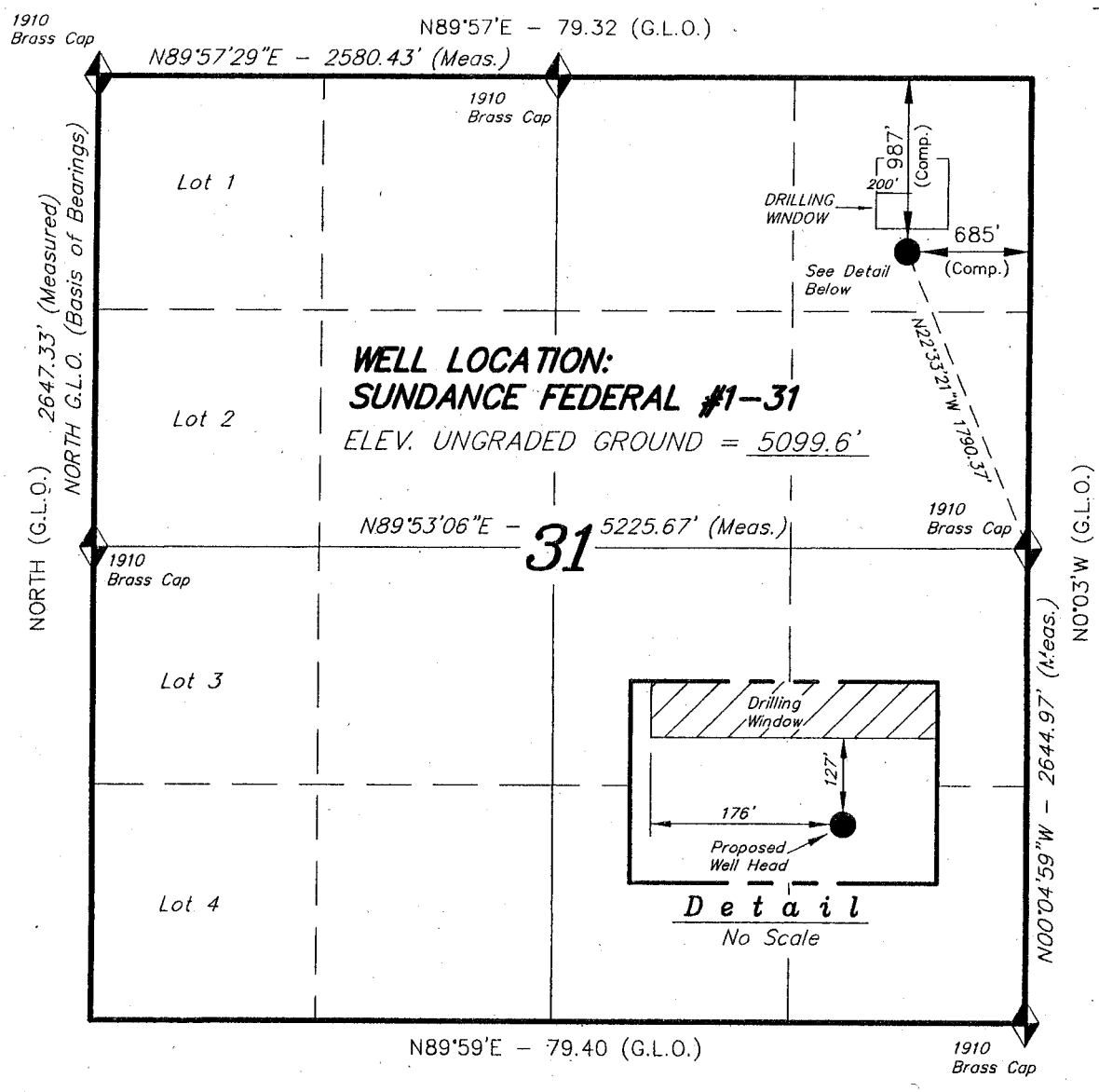

◆ = SECTION CORNERS LOCATED

BASIS OF ELEV; U.S.G.S. 7-1/2 min QUAD (PARIETTE DRAW SW)

INLAND PRODUCTION COMPANY

WELL LOCATION, SUNDANCE FEDERAL #1-31, LOCATED AS SHOWN IN THE NE 1/4 NE 1/4 OF SECTION 31, T8S, R18E, S.L.B.&M. UINTAH COUNTY, UTAH.

THIS IS TO CERTIFY THAT THE ABOVE PLAT WAS PREPARED FROM FIELD NOTES OF ACTUAL SURVEYS MADE BY ME OR UNDER MY SUPERVISION AND THAT THE SAME ARE TRUE AND CORRECT TO THE BEST OF MY KNOWLEDGE AND BELIEF.

REGISTERED LAND SURVEYOR No. 189377 STACY W. STEWART STATE OF UTAH

REGISTERED LAND SURVEYOR
REGISTRATION No. 180125
STATE OF UTAH

TRI STATE LAND SURVEYING & CONSULTING
38 WEST 100 NORTH – VERNAL, UTAH 84078
(435) 781-2501

SCALE: 1" = 1000'	SURVEYED BY: D.J.S.
DATE: 12-18-01	DRAWN BY: J.R.S.
NOTES:	FILE #

FORM 3160-5
(June 1990)

UNITED STATES
DEPARTMENT OF THE INTERIOR
BUREAU OF LAND MANAGEMENT

FORM APPROVED
Budget Bureau No. 1004-0135
Expires: March 31, 1993

004

SUNDRY NOTICES AND REPORTS ON WELLS

Do not use this form for proposals to drill or to deepen or reentry a different reservoir.
Use "APPLICATION FOR PERMIT -" for such proposals

SUBMIT IN TRIPLICATE

5. Lease Designation and Serial No.
UTU-74872

6. If Indian, Allottee or Tribe Name
NA

7. If Unit or CA, Agreement Designation
NA

1. Type of Well
[X] Oil Well [ ] Gas Well [ ] Other

8. Well Name and No.
SUNDANCE FED 1-31-8-18

9. API Well No.
43-047-34494

2. Name of Operator
INLAND PRODUCTION COMPANY

10. Field and Pool, or Exploratory Area
EIGHT MILE FLAT NORTI

3. Address and Telephone No.
Rt. 3 Box 3630, Myton Utah, 84052 435-646-3721

11. County or Parish, State
UINTAH COUNTY, UTAH

4. Location of Well (Footage, Sec., T., R., m., or Survey Description)
987 FNL 685 FEL NE/NE Section 31, T8S R18E

12. CHECK APPROPRIATE BOX(s) TO INDICATE NATURE OF NOTICE, REPORT, OR OTHER DATA

TYPE OF SUBMISSION	TYPE OF ACTION	
[X] Notice of Intent	[ ] Abandonment	[ ] Change of Plans
[ ] Subsequent Report	[ ] Recompletion	[ ] New Construction
[ ] Final Abandonment Notice	[ ] Plugging Back	[ ] Non-Routine Fracturing
	[ ] Casing Repair	[ ] Water Shut-Off
	[ ] Altering Casing	[ ] Conversion to Injection
	[X] Other **Permit Extension**	[ ] Dispose Water
		(Note: Report results of multiple completion on Well Completion or Recompletion Report and Log form.)

13. Describe Proposed or Completed Operations (Clearly state all pertinent details, and give pertinent dates, including estimated date of starting any proposed work. If well is directionally drilled, give subsurface locations and measured and true vertical depths for all markers and zones pertinent to this work.)*

Inland Production Company requests to extend the permit to drill this well for one year.

Approved by the
Utah Division of
Oil, Gas and Mining
Date: 02-13-03
By: [signature]

RECEIVED
FEB 04 2003
DIV. OF OIL, GAS & MINING

COPY SENT TO OPERATOR
02-14-03
CHD

14. I hereby certify that the foregoing is true and correct
Signed Mandie Crozier Title Permit Clerk Date 2/3/03
Mandie Crozier

CC: UTAH DOGM

(This space for Federal or State office use)
Approved by _____ Title _____ Date _____
Conditions of approval, if any:

CC: Utah DOGM

Title 18 U.S.C. Section 1001, makes it a crime for any person knowingly and willfully to make to any department or agency of the United States any false, fictitious or fradulent statements or representations as to any matter within its jurisdiction.

FORM 3160-3
(December 1990)

SUBMIT IN TRIPLICATE*
(Other instructions on reverse side)

Form approved.
Budget Bureau No. 1004-0136
Expires December 31, 1991

005

UNITED STATES
DEPARTMENT OF THE INTERIOR
BUREAU OF LAND MANAGEMENT

APPLICATION FOR PERMIT TO DRILL, DEEPEN, OR PLUG BACK

5. LEASE DESIGNATION AND SERIAL NO.: UTU-74872

6. IF INDIAN, ALLOTTEE OR TRIBE NAME: N/A

1a. TYPE OF WORK: DRILL [X] DEEPEN [ ]

1b. TYPE OF WELL: OIL WELL [X] GAS WELL [ ] OTHER [ ] SINGLE ZONE [X] MULTIPLE ZONE [ ]

7. UNIT AGREEMENT NAME: N/A

8. FARM OR LEASE NAME WELL NO: 1-31-8-18

2. NAME OF OPERATOR: Inland Production Company

9. API WELL NO.: 43-047-34494

3. ADDRESS OF OPERATOR: Route #3 Box 3630, Myton, UT 84052 Phone: (435) 646-3721

10. FIELD AND POOL OR WILDCAT: Monument Butte

4. LOCATION OF WELL (Report location clearly and in accordance with any State requirements.*)
At Surface: NE/NE 987' FNL 685' FEL
At proposed Prod. Zone:

11. SEC., T., R., M., OR BLK. AND SURVEY OR AREA: NE/NE Sec. 31, T8S, R18E

14. DISTANCE IN MILES AND DIRECTION FROM NEAREST TOWN OR POST OFFICE*: Approximately 20.6 miles southeast of Myton, Utah

12. County: Uintah

13. STATE: UT

15. DISTANCE FROM PROPOSED* LOCATION TO NEAREST PROPERTY OR LEASE LINE, FT. (Also to): Approx. 685' f/lse line

16. NO. OF ACRES IN LEASE: 677.36

17. NO. OF ACRES ASSIGNED TO THIS WELL: 40

18. DISTANCE FROM PROPOSED LOCATION* TO NEAREST WELL, DRILLING, COMPLETED, OR APPLIED FOR ON THIS LEASE, FT.: Approx. 1955'

19. PROPOSED DEPTH: 6500'

20. ROTARY OR CABLE TOOLS: Rotary

21. ELEVATIONS (Show whether DF, RT, GR, etc.): 5099.6' GR

22. APPROX. DATE WORK WILL START*: 1st Quarter 2002

23. PROPOSED CASING AND CEMENTING PROGRAM

SIZE OF HOLE	SIZE OF CASING	WEIGHT/FOOT	SETTING DEPTH	QUANTITY OF CEMENT
Refer to Monument Butte Field SOP's Drilling Program/Casing Design				

Inland Production Company proposes to drill this well in accordance with the attached exhibits.

The Conditions of Approval are also attached.

COPY

IN ABOVE SPACE DESCRIBE PROPOSED PROGRAM: If proposal is to deepen or plug back, give data on present productive zone and proposed new productive zone. If proposal is to drill or deepen directionally, give pertinent data on subsurface locations and measured and true vertical depths. Give blowout preventer program, if any.

24. SIGNED: Mandie Crozier TITLE: Permit Clerk DATE: 2/1/02

(This space for Federal or State office use)

PERMIT NO. _____ APPROVAL DATE _____

Application approval does not warrant or certify that the applicant holds legal or equitable title to those rights in the subject lease which would entitle the applicant to conduct operations thereon.

CONDITIONS OF APPROVAL, IF ANY:

APPROVED BY _____ TITLE _____ DATE _____

RECEIVED
JUN 16 2003
DIV. OF OIL, GAS & MINING

*See Instructions On Reverse Side

Title 18 U.S.C. Section 1001, makes it a crime for any person knowingly and willfully to make to any department or agency of the United States any false, fictitious or fraudulent statements or representations as to any matter within its jurisdiction.

Inland
PRODUCTION COMPANY
A Subsidiary of Inland Resources Inc.

June 13, 2003

State of Utah
Division of Oil, Gas & Mining
Attn: Diana Mason
1594 West North Temple - Suite 1210
P.O. Box 145801
Salt Lake City, Utah 84114-5801

RE: Amended Applications for Permit to Drill Wells No: 1-31-8-18, 7-31-8-18, 8-31-8-18, 10-31-8-18, 11-31-8-18, and 14-31-8-18.

Dear Diana:

Enclosed find the amended Topographic Map "B" and Topographic Map "C" on the above mentioned locations. Since submission there have been some topographic changes on the proposed access roads as well as the proposed gas and water lines. Please replace the maps originally submitted with the revised maps that I have enclosed. If you have any questions, feel free to give either Brad or myself a call.

Sincerely,

Mandie Crozier

Mandie Crozier
Regulatory Specialist

enclosures

RECEIVED
JUN 16 2003
DIV. OF OIL, GAS & MINING

Inland Production Company Field Office • Route 3, Box 3630 • Myton, UT 84052 • 435-646-3721 • FAX 435-646-3031
Corporate Office • 410 Seventeenth Street, Suite 700 • Denver, CO 80202 • 303-893-0102 • FAX 303-893-0103

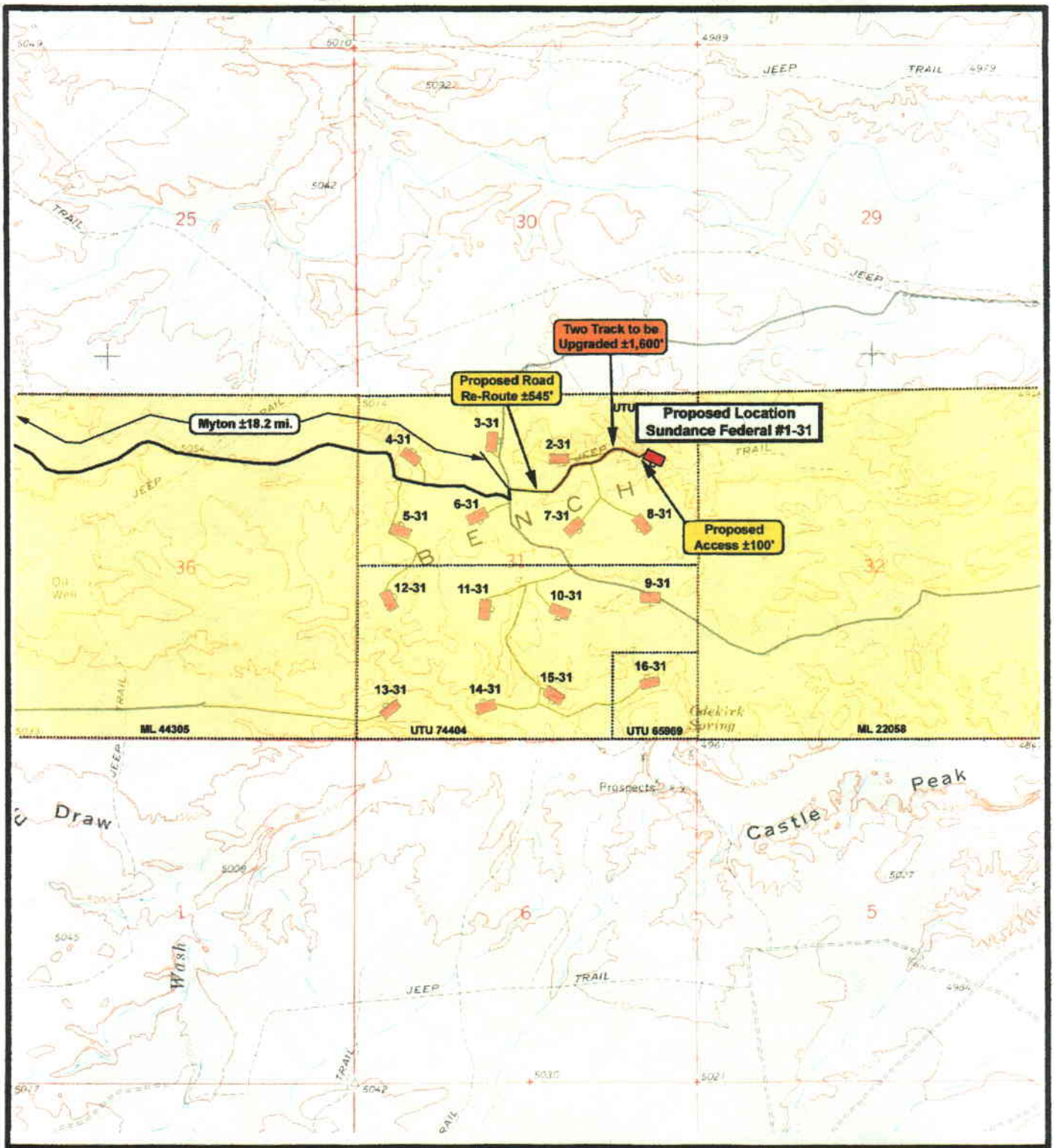

Inland RESOURCES INC.

Sundance Federal #1-31
SEC. 31, T8S, R18E, S.L.B.&M.

N

Tri-State Land Surveying Inc.
(435) 781-2501
180 North Vernal Ave. Vernal, Utah 84078

SCALE: 1" = 2,000'
DRAWN BY: R.A.B.
DATE: 05-28-2003

Legend
- Existing Road
- Proposed Access
- Upgraded Access

TOPOGRAPHIC MAP
"B"

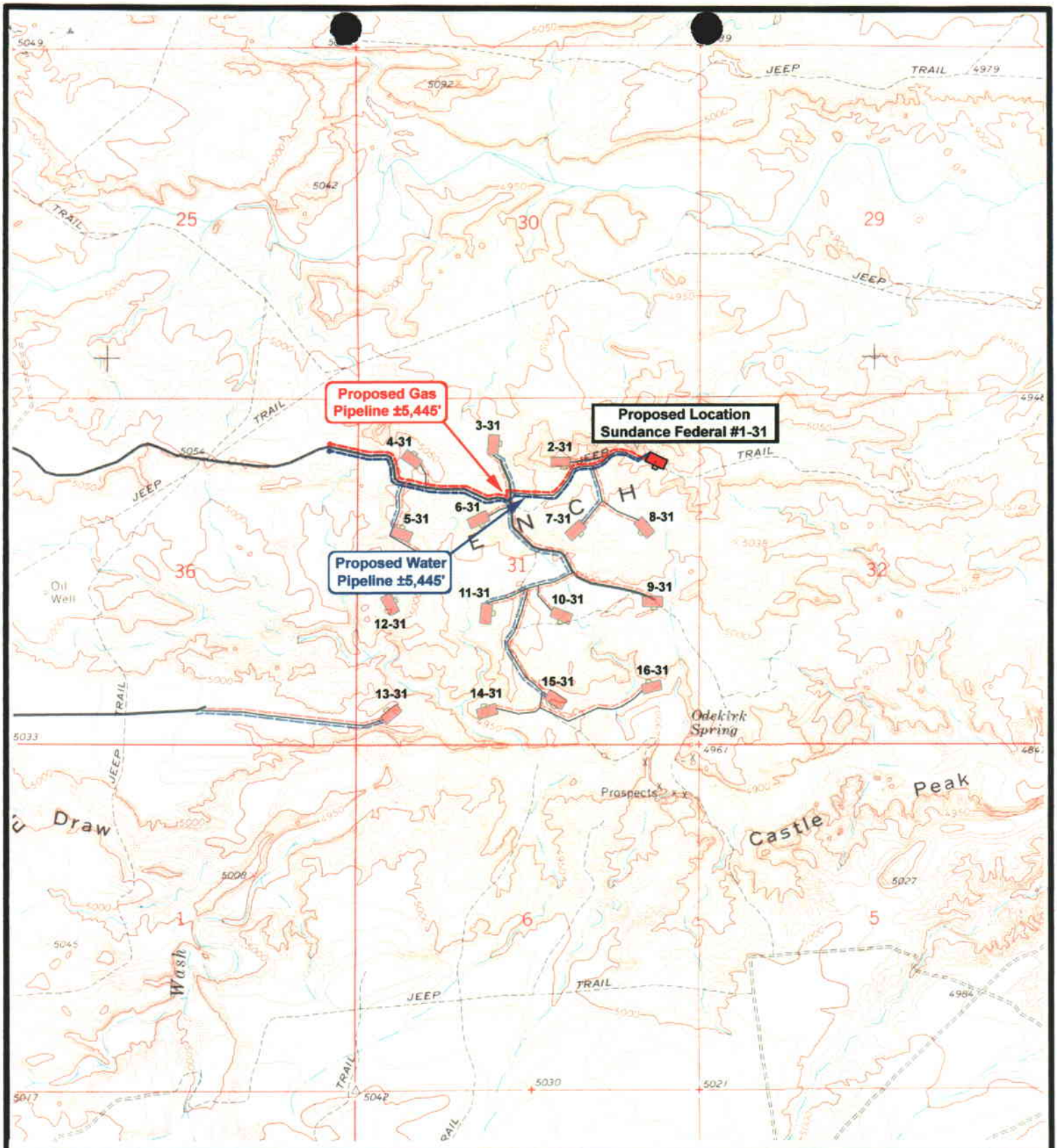

Inland RESOURCES INC.

Sundance Federal #1-31
SEC. 31, T8S, R18E, S.L.B.&M.

N

Tri-State Land Surveying Inc.
(435) 781-2501
180 North Vernal Ave. Vernal, Utah 84078

SCALE: 1" = 2,000'
DRAWN BY: R.A.B.
DATE: 05-28-2003

Legend

- Roads
- Proposed Gas Line
- Proposed Water Line

TOPOGRAPHIC MAP
"C"

FORM 3160-3
(December 1990)

SUBMIT IN TRIPLICATE*
(Other instructions on reverse side)

Form approved.
Budget Bureau No. 1004-0136
Expires December 31, 1991

006

UNITED STATES
DEPARTMENT OF THE INTERIOR
BUREAU OF LAND MANAGEMENT

APPLICATION FOR PERMIT TO DRILL, DEEPEN, OR PLUG BACK

5. LEASE DESIGNATION AND SERIAL NO.: UTU-74872

6. IF INDIAN, ALLOTTEE OR TRIBE NAME: N/A

1a. TYPE OF WORK: DRILL [X] DEEPEN [ ]

1b. TYPE OF WELL: OIL WELL [X] GAS WELL [ ] OTHER [ ] SINGLE ZONE [X] MULTIPLE ZONE [ ]

7. UNIT AGREEMENT NAME: N/A

8. FARM OR LEASE NAME WELL NO: 1-31-8-18

2. NAME OF OPERATOR: Inland Production Company

9. API WELL NO.:

3. ADDRESS OF OPERATOR: Route #3 Box 3630, Myton, UT 84052 Phone: (435) 646-3721

10. FIELD AND POOL OR WILDCAT: Monument Butte

4. LOCATION OF WELL (Report location clearly and in accordance with any State requirements.*)
At Surface: NE/NE 987' FNL 685' FEL
At proposed Prod. Zone:

11. SEC., T., R., M., OR BLK. AND SURVEY OR AREA: NE/NE Sec. 31, T8S, R18E

14. DISTANCE IN MILES AND DIRECTION FROM NEAREST TOWN OR POST OFFICE*: Approximately 20.6 miles southeast of Myton, Utah

12. County: Uintah

13. STATE: UT

15. DISTANCE FROM PROPOSED* LOCATION TO NEAREST PROPERTY OR LEASE LINE, FT.(Also to: Approx. 685' f/lse line

16. NO. OF ACRES IN LEASE: 677.36

17. NO. OF ACRES ASSIGNED TO THIS WELL: 40

18. DISTANCE FROM PROPOSED LOCATION* TO NEAREST WELL, DRILLING, COMPLETED, OR APPLIED FOR ON THIS LEASE, FT.: Approx. 1955'

19. PROPOSED DEPTH: 6500'

20. ROTARY OR CABLE TOOLS: Rotary

21. ELEVATIONS (Show whether DF, RT, GR, etc.): 5099.6' GR

22. APPROX. DATE WORK WILL START*: 1st Quarter 2002

23. PROPOSED CASING AND CEMENTING PROGRAM

SIZE OF HOLE	SIZE OF CASING	WEIGHT/FOOT	SETTING DEPTH	QUANTITY OF CEMENT
Refer to Monument Butte Field SOP's Drilling Program/Casing Design				

Inland Production Company proposes to drill this well in accordance with the attached exhibits.

The Conditions of Approval are also attached.

RECEIVED
SEP 08 2003
DIV. OF OIL, GAS & MINING

RECEIVED
FEB 04 2002

IN ABOVE SPACE DESCRIBE PROPOSED PROGRAM : If proposal is to deepen or plug back, give data on present productive zone and proposed new productive zone. If proposal is to drill or deepen directionally, give pertinent data on subsurface locations and measured and true vertical depths. Give blowout preventer program, if any.

24. SIGNED: Mandie Crozier TITLE: Permit Clerk DATE: 2/1/02

(This space for Federal or State office use)

NOTICE OF APPROVAL

CONDITIONS OF APPROVAL ATTACHED

PERMIT NO. APPROVAL DATE

Application approval does not warrant or certify that the applicant holds legal or equitable title to those rights in the subject lease which would entitle the applicant to conduct operations thereon.

CONDITIONS OF APPROVAL, IF ANY:

APPROVED BY: Howard B. Cleavinger II TITLE: Assistant Field Manager Mineral Resources DATE: 09/02/2003

*See Instructions On Reverse Side

Title 18 U.S.C. Section 1001, makes it a crime for any person knowingly and willfully to make to any department or agency of the United States any false, fictitious or fraudulent statements or representations as to any matter within its jurisdiction.

UDOGM

CONDITIONS OF APPROVAL
APPLICATION FOR PERMIT TO DRILL

Company/Operator: Inland Production Company

Well Name & Number: Monument Butte 1-31-8-18

API Number: 43-047-34494

Lease Number: U -74872

Location: NENE Sec. 31 T. 8S R. 18E

Agreement: N/A

For more specific details on notification requirements, please check the Conditions of Approval for Notice to Drill and Surface Use Program.

CONDITIONS OF APPROVAL FOR NOTICE TO DRILL

Approval of this application does not warrant or certify that the applicant holds legal or equitable title to those rights in the subject lease which would entitle the applicant to conduct operations thereon.

Be aware fire restrictions may be in effect when location is being constructed and/or when well is being drilled. Contact the appropriate Surface Management Agency for information.

A. DRILLING PROGRAM

1. Casing Program and Auxiliary Equipment

As a minimum, the usable water resources and other resources shall be isolated and/or protected by having a cement top for the production casing at least 200 ft. above the top of the Green River Formation, identified at ± 1,875 ft.

SURFACE USE PROGRAM
CONDITIONS OF APPROVAL (COAs)

In order to mitigate long-term impacts to nesting Golden Eagles a field survey will be conducted prior to any surface disturbance activities to determine if nests' are present. The survey will be conducted prior to construction or surface disturbing activities by a qualified wildlife biologist acceptable to the BLM. If active nests or nests which have been active during the year are found within ½ mile of the well location, no construction or drilling will be allowed. If inactive nests (nests which have been inactive for two or more years) are found within ½ mile, no construction or drilling would be allowed during the nesting season of February 1 to July 15.

If the well becomes a producing well, a hospital type muffler shall be installed on the pumping unit to reduce noise levels in the area.

To protect the shallow water table in this area, the reserve pit shall be lined with at least a 12-mil nylon reinforced plastic liner. If rocky conditions are encounter in the pit, the liner shall be bedded with either certified straw or felt prior to installing the liner.

FORM 3160-5
(June 1990)

UNITED STATES
DEPARTMENT OF THE INTERIOR
BUREAU OF LAND MANAGEMENT

FORM APPROVED
Budget Bureau No. 1004-0135
Expires: March 31, 1993

007

SUNDRY NOTICES AND REPORTS ON WELLS

Do not use this form for proposals to drill or to deepen or reentry a different reservoir.
Use "APPLICATION FOR PERMIT -" for such proposals

SUBMIT IN TRIPLICATE

5. Lease Designation and Serial No.
UTU-74872

6. If Indian, Allottee or Tribe Name
NA

7. If Unit or CA, Agreement Designation
N/A

1. Type of Well
[X] Oil Well [ ] Gas Well [ ] Other

8. Well Name and No.
1-31-8-18

9. API Well No.
43-047-34494

2. Name of Operator
INLAND PRODUCTION COMPANY

10. Field and Pool, or Exploratory Area
8 MILE FLAT NORTH

3. Address and Telephone No.
Rt. 3 Box 3630, Myton Utah, 84052 435-646-3721

11. County or Parish, State
UINTAH COUNTY, UT

4. Location of Well (Footage, Sec., T., R., m., or Survey Description)
987 FNL 685 FEL NE/NE Section 31, T8S R18E

12. CHECK APPROPRIATE BOX(s) TO INDICATE NATURE OF NOTICE, REPORT, OR OTHER DATA

TYPE OF SUBMISSION	TYPE OF ACTION	
[X] Notice of Intent	[ ] Abandonment	[ ] Change of Plans
[ ] Subsequent Report	[ ] Recompletion	[ ] New Construction
[ ] Final Abandonment Notice	[ ] Plugging Back	[ ] Non-Routine Fracturing
	[ ] Casing Repair	[ ] Water Shut-Off
	[ ] Altering Casing	[ ] Conversion to Injection
	[X] Other Change of Name	[ ] Dispose Water

(Note: Report results of multiple completion on Well Completion or Recompletion Report and Log form.)

13. Describe Proposed or Completed Operations (Clearly state all pertinent details, and give pertinent dates, including estimated date of starting any proposed work. If well is directionally drilled, give subsurface locations and measured and true vertical depths for all markers and zones pertinent to this work.)*

Effective September 25, 2003 Inland Production Company is changing the name of the 1-31-8-18 to the **Federal 1-31-8-18.**

14. I hereby certify that the foregoing is true and correct

Signed Mandie Crozier Title Regulatory Specialist Date 9/25/2003

CC: UTAH DOGM

(This space for Federal or State office use)

Approved by _____ Title _____ Date _____

Conditions of approval, if any:

CC: Utah DOGM

RECEIVED
SEP 26 2003
DIV. OF OIL, GAS & MINING

Title 18 U.S.C. Section 1001, makes it a crime for any person knowingly and willfully to make to any department or agency of the United States any false, fictitious or fraudulent statements or representations as to any matter within its jurisdiction.

009

RECEIVED

OCT 16 2003

DIV. OF OIL, GAS & MINING

STATE OF UTAH
DIVISION OF OIL, GAS AND MINING
ENTITY ACTION FORM -FORM 6

OPERATOR: INLAND PRODUCTION COMPANY
ADDRESS: RT. 3 BOX 3630
MYTON, UT 84052

OPERATOR ACCT. NO. N5160

ACTION CODE	CURRENT ENTITY NO.	NEW ENTITY NO.	API NUMBER	WELL NAME	WELL LOCATION QQ	SC	TP	RG	COUNTY	SPUD DATE	EFFECTIVE DATE
A	99999	13923	43-013-32297	Ashley #6-11-9-15	SE/NW	11	9S	15E	Duchesne	October 8, 2003	10/16/03

WELL 1 COMMENTS: GRRV

ACTION CODE	CURRENT ENTITY NO.	NEW ENTITY NO.	API NUMBER	WELL NAME	WELL LOCATION QQ	SC	TP	RG	COUNTY	SPUD DATE	EFFECTIVE DATE
A	99999	13924	43-047-34501	Federal #11-31-8-18	NE/SW	31	8S	18E	Uintah	October 9, 2003	10/16/03

WELL 2 COMMENTS: GRRV

ACTION CODE	CURRENT ENTITY NO.	NEW ENTITY NO.	API NUMBER	WELL NAME	WELL LOCATION QQ	SC	TP	RG	COUNTY	SPUD DATE	EFFECTIVE DATE
A	99999	13925	43-047-34500	Federal #7-31-8-18	SW/NE	31	8S	18E	Uintah	October 13,2003	10/16/03

WELL 3 COMMENTS: GRRV

ACTION CODE	CURRENT ENTITY NO.	NEW ENTITY NO.	API NUMBER	WELL NAME	WELL LOCATION QQ	SC	TP	RG	COUNTY	SPUD DATE	EFFECTIVE DATE
A	99999	13926	43-013-32295	Ashley #4-11-9-15	NW/NW	11	9S	15E	Duchesne	October 13, 2003	10/16/03

WELL 4 COMMENTS: GRRV

ACTION CODE	CURRENT ENTITY NO.	NEW ENTITY NO.	API NUMBER	WELL NAME	WELL LOCATION QQ	SC	TP	RG	COUNTY	SPUD DATE	EFFECTIVE DATE
A	99999	13927	43-047-34494	Federal #1-31-8-18	NE/NE	31	8S	18E	Uintah	October 15, 2003	10/16/03

WELL 5 COMMENTS: GRRV

ACTION CODES (See instructions on back of form)
A - Establish new entity for new well (single well only)
B - Add new well to existing entity (group or unit well)
C - Re-assign well from one existing entity to another existing entity
D - Re-assign well from one existing entity to a new entity
E - Other (explain in comments section)

NOTE: Use COMMENT section to explain why each Action Code was selected.

(3/89)

Signature: Kebbie S. Jones
Kebbie S. Jones

Production Clerk
Title

October 16, 2003
Date

PAGE 02
INLAND
4356463031
10/16/2003 15:11

DIVISION OF OIL, GAS AND MINING

SPUDDING INFORMATION

Name of Company: INLAND PRODUCTION COMPANY

Well Name: FEDERAL 1-31-8-18

Api No: 43-047-34494 Lease Type: FEDERAL

Section 31 Township 08S Range 18E County UINTAH

Drilling Contractor LEON ROSS RATHOLE RIG # 15

SPUDDED:

Date 10/15/03

Time 8:00 AM

How DRY

Drilling will commence:

Reported by PAT WISENER

Telephone # 1-435-823-7468

Date 10/16/2003 Signed CHD

FORM
(June 1990)

010

UNITED STATES
DEPARTMENT OF THE INTERIOR
BUREAU OF LAND MANAGEMENT

FORM APPROVED
Budget Bureau No. 1004-0135
Expires: March 31, 1993

SUNDRY NOTICES AND REPORTS ON WELLS

Do not use this form for proposals to drill or to deepen or reentry a different reservoir.
Use "APPLICATION FOR PERMIT -" for such proposals

SUBMIT IN TRIPLICATE

5. Lease Designation and Serial No.
UTU-74872

6. If Indian, Allottee or Tribe Name
NA

7. If Unit or CA, Agreement Designation
N/A

1. Type of Well
[X] Oil Well [ ] Gas Well [ ] Other

8. Well Name and No.
FEDERAL 1-31-8-18

9. API Well No.
43-047-34494

2. Name of Operator
INLAND PRODUCTION COMPANY

10. Field and Pool, or Exploratory Area
8 MILE FLAT NORTH

3. Address and Telephone No.
Rt. 3 Box 3630, Myton Utah, 84052 435-646-3721

11. County or Parish, State
UINTAH COUNTY, UT

4. Location of Well (Footage, Sec., T., R., m., or Survey Description)
987 FNL 685 FEL NE/NE Section 31, T8S R18E

12. CHECK APPROPRIATE BOX(s) TO INDICATE NATURE OF NOTICE, REPORT, OR OTHER DATA

TYPE OF SUBMISSION	TYPE OF ACTION	
[ ] Notice of Intent	[ ] Abandonment	[ ] Change of Plans
[X] Subsequent Report	[ ] Recompletion	[ ] New Construction
[ ] Final Abandonment Notice	[ ] Plugging Back	[ ] Non-Routine Fracturing
	[ ] Casing Repair	[ ] Water Shut-Off
	[ ] Altering Casing	[ ] Conversion to Injection
	[X] Other Spud Notice	[ ] Dispose Water

(Note: Report results of multiple completion on Well Completion or Recompletion Report and Log form.)

13. Describe Proposed or Completed Operations (Clearly state all pertinent details, and give pertinent dates, including estimated date of starting any proposed work. If well is directionally drilled, give subsurface locations and measured and true vertical depths for all markers and zones pertinent to this work.)*

On 10-16-03 MIRU Ross # 15. Drill 307' of 12 1/4" hole with air mist. TIH W/ 7 Jt's 8 5/8" J-55 24 # csgn. Set @ 313'/ KB On 10-19-03 cement with 150 sks of class "G" w/ 3% CaCL2 + 1/4# sk Cello- Flake Mixed @ 15.8 ppg > 1.17 cf/ sk yeild. Returned 3.5 bbls cement to pit. WOC.

14. I hereby certify that the foregoing is true and correct

Signed Ray Herrera Title Drilling Foreman Date 10/20/03
Ray Herrera

CC: UTAH DOGM

(This space for Federal or State office use)

Approved by _____ Title _____ Date _____

Conditions of approval, if any:

CC: Utah DOGM

RECEIVED
OCT 2 1 2003
DIV. OF OIL, GAS & MINING

Title 18 U.S.C. Section 1001, makes it a crime for any person knowingly and willfully to make to any department or agency of the United States any false, fictitious or fradulent statements or representations as to any matter within its jurisdiction.

INLAND PRODUCTION COMPANY - CASING & CEMENT REPORT

8 5/8 CASING SET AT 315.26

LAST CASING 8 5/8" SET AT 315

DATUM 12' KB

DATUM TO CUT OFF CASING

DATUM TO BRADENHEAD FLANGE

TD DRILLER 307 LOGGER

HOLE SIZE 12 1/4

OPERATOR Inland Production Company

WELL Federal 1-31-8-18

FIELD/PROSPECT Monument Butte

CONTRACTOR & RIG # Ross # 15

LOG OF CASING STRING:

PIECES	OD	ITEM - MAKE - DESCRIPTION	WT / FT	GRD	THREAD	CONDT	LENGTH
		39.00' sh jt' shjt					
		WHI - 92 csg head			8rd	A	0.95
7	8 5/8"	Maverick ST&C csg	24#	J-55	8rd	A	303.41
		GUIDE shoe			8rd	A	0.9

CASING INVENTORY BAL.	FEET	JTS
TOTAL LENGTH OF STRING	305.26	7
LESS NON CSG. ITEMS	1.85	
PLUS FULL JTS. LEFT OUT	0	
TOTAL	303.41	7
TOTAL CSG. DEL. (W/O THRDS)	300.93	7
TIMING	1ST STAGE	
BEGIN RUN CSG.	SPUD	10/16/03
CSG. IN HOLE		7:30 AM
BEGIN CIRC		
BEGIN PUMP CMT		
BEGIN DSPL. CMT		
PLUG DOWN	Cemented	10/19/03

TOTAL LENGTH OF STRING	305.26
LESS CUT OFF PIECE	2
PLUS DATUM TO T/CUT OFF CSG	12
CASING SET DEPTH	**315.26**

} COMPARE

GOOD CIRC THRU JOB yes

Bbls CMT CIRC TO SURFACE 3.5 bbls cement

RECIPROCATED PIPE FOR ____ THRU ____ FT STROKE

DID BACK PRES. VALVE HOLD ? N/A

BUMPED PLUG TO 530 PSI

CEMENT USED — CEMENT COMPANY- B. J.

STAGE	# SX	CEMENT TYPE & ADDITIVES
1	150	Class "G" w/ 2% CaCL2 + 1/4#/sk Cello-Flake mixed @ 15.8 ppg 1.17 cf/sk yield

CENTRALIZER & SCRATCHER PLACEMENT — SHOW MAKE & SPACING

Centralizers - Middle first, top second & third for 3

COMPANY REPRESENTATIVE Ray Herrera DATE 10/20/03

FORM 3160-5
(June 1990)

UNITED STATES
DEPARTMENT OF THE INTERIOR
BUREAU OF LAND MANAGEMENT

FORM APPROVED
Budget Bureau No. 1004-0135
Expires: March 31, 1993

011

SUNDRY NOTICES AND REPORTS ON WELLS

Do not use this form for proposals to drill or to deepen or reentry a different reservoir.
Use "APPLICATION FOR PERMIT -" for such proposals

5. Lease Designation and Serial No.
UTU-74872

6. If Indian, Allottee or Tribe Name
NA

7. If Unit or CA, Agreement Designation
N/A

SUBMIT IN TRIPLICATE

1. Type of Well
[X] Oil Well [ ] Gas Well [ ] Other

8. Well Name and No.
FEDERAL 1-31-8-18

9. API Well No.
43-047-34494

2. Name of Operator
INLAND PRODUCTION COMPANY

10. Field and Pool, or Exploratory Area
8 MILE FLAT NORTH

3. Address and Telephone No.
Rt. 3 Box 3630, Myton Utah, 84052 435-646-3721

11. County or Parish, State
UINTAH COUNTY, UT

4. Location of Well (Footage, Sec., T., R., m., or Survey Description)
987 FNL 685 FEL NE/NE Section 31, T8S R18E

12. CHECK APPROPRIATE BOX(s) TO INDICATE NATURE OF NOTICE, REPORT, OR OTHER DATA

TYPE OF SUBMISSION	TYPE OF ACTION	
[ ] Notice of Intent	[ ] Abandonment	[ ] Change of Plans
[X] Subsequent Report	[ ] Recompletion	[ ] New Construction
[ ] Final Abandonment Notice	[ ] Plugging Back	[ ] Non-Routine Fracturing
	[ ] Casing Repair	[ ] Water Shut-Off
	[ ] Altering Casing	[ ] Conversion to Injection
	[X] Other Weekly Status Report	[ ] Dispose Water
		(Note: Report results of multiple completion on Well Completion or Recompletion Report and Log form.)

13. Describe Proposed or Completed Operations (Clearly state all pertinent details, and give pertinent dates, including estimated date of starting any proposed work. If well is directionally drilled, give subsurface locations and measured and true vertical depths for all markers and zones pertinent to this work.)*

On 10-25-03. MIRU Eagle Rig # 1. Set equipment. Pressure test Bop's, Kelly, & TIW to 2,000 psi. Test 85/8" csgn to 1,500 psi. Vernal BLM office was notified of test. PU BHA and tag cement @ 260'. Drill out cement & shoe. Continue to drill a 77/8" hole with fresh water to a depth of 6395'. Lay down drill string, BHA. Open hole log from TD to surface. PU & MU guide shoe, 1 jt 51/2" J-55 15.5 # csgn. Float collar, & 141 Jt's 51/2" J-55 15.5# csgn. Set @ 6385'/ KB. Cement with 300 sks Prem Lite ll w/ 3% KCL, 10 % Gel, 5#'s sk CSE, 2#'s sk Kolseal, .8% Sms, 1/4# sks Celloflake. Mixed @ 11.0 ppg, >3.42 yld. Followed by 425 sks 50/50 Poz w/ 3% KCL, 2% Gel, .05% Static free, 1/4# sk Celloflake. Mixed @ 14.4 ppg, > 1.24 yld. Drop plug displace with 146 bbls fresh water, Lost returns last 11 BBLS 0f displacement, no cement to surface. Nipple down BOP's. set slips @ 75,000 # 's tension. Clean pit's & release rig @ 8:00am on 11/01/2003. Est.cement top 299'

14. I hereby certify that the foregoing is true and correct
Signed Floyd Mitchell Title Drilling Foreman Date 11/02/2003
Floyd Mitchell

CC: UTAH DOGM

(This space for Federal or State office use)
Approved by _____ Title _____ Date _____
Conditions of approval, if any:
CC: Utah DOGM

RECEIVED
NOV 06 2003
DIV. OF OIL, GAS & MINING

Title 18 U.S.C. Section 1001, makes it a crime for any person knowingly and willfully to make to any department or agency of the United States any false, fictitious or fradulent statements or representations as to any matter within its jurisdiction.

FORM 3160-5
(September 2001)

UNITED STATES
DEPARTMENT OF THE INTERIOR
BUREAU OF LAND MANAGEMENT

FORM APPROVED
OMB No. 1004-0135
Expires January 31,2004

012

SUNDRY NOTICES AND REPORTS ON WELLS

Do not use this form for proposals to drill or to re-enter an abandoned well. Use Form 3160-3 (APD) for such proposals.

SUBMIT IN TRIPLICATE - Other Insturctions on reverse side

5. Lease Serial No.
UTU-74872

6. If Indian, Allottee or Tribe Name.

7. If Unit or CA/Agreement, Name and/or
EIGHT MILE FLAT AREA

1. Type of Well
☒ Oil Well ☐ Gas Well ☐ Other

8. Well Name and No.
FEDERAL 1-31-8-18

2. Name of Operator
Inland Production Company

9. API Well No.
430473449400

3a. Address Route 3 Box 3630
Myton, UT 84052

3b. Phone *(include are code)*
435.646.3721

10. Field and Pool, or Exploratory Area
Monument Butte

4. Location of *(Footage, Sec., T., R., M., or Survey Description)*
987 FNL 685 FEL
NE/NE Section 31 T8S R18E

11. County or Parish, State
Uintah,UT

12. CHECK APPROPRIATE BOX(ES) TO INIDICATE NATURE OF NOTICE, OR OTHER DATA

TYPE OF SUBMISSION	TYPE OF ACTION			
☐ Notice of Intent	☐ Acidize	☐ Deepen	☐ Production(Start/Resume)	☐ Water Shut-Off
☒ Subsequent Report	☐ Alter Casing	☐ Fracture Treat	☐ Reclamation	☐ Well Integrity
☐ Final Abandonment	☐ Casing Repair	☐ New Construction	☐ Recomplete	☒ Other Weekly Status Report
	☐ Change Plans	☐ Plug & Abandon	☐ Temporarily Abandon	
	☐ Convert to	☐ Plug Back	☐ Water Disposal	

13. Describe Proposed or Completed Operation (clearly state all perinent details, including estimated starting date of any proposed work and approximate duration thereof. If the proposal is to deepen directionally or recomplete horizontalley, give subsurface locations and measured and tur vericaldepths of all pertinent markers and zones. Attach the Bond under which the work will be performed or provide the Bond No. on file with BLM/BIA. Required subsequent reports shall be filed within 30 days following completion of the involved operations. If the operation results in a multiple completion or recompletion in a new interval, a Form 3160-4 sahll be filed once testing has been completed. Final

Status report for time period 11/14/03 – 11/25/03 Subject well had completion procedures initiated in the Green River formation on 11/14/03 without the use of a service rig over the well. A cement bond log was run and a total of eight Green River intervals were perforated and hydraulically fracture treated w/ 20/40 mesh sand. Perf intervals were #1 (6229-6234'), (6162-6172') (All 4 JSPF); #2 (6080-6089') (4 JSPF); #3 (5952-5961') (4 JSPF); #4 (5822-5833'), (5803-5811'), (5775-5788'), (5748-5764'), and (5728-5736') (All 2 JSPF); #5 (5434-5446'), (5414-5422'), (5386-5411') (All 2 JSPF); #6 (4649-4654') (4 JSPF), #7 (4536-4548') (4 JSPF); #8 (4466-4479') (4 JSPF). Composite flow-through frac plugs were used between stages. Fracs were flowed back through chokes. A service rig was moved on well on 11/20/03. Bridge plugs were drilled out. Well was cleaned out to PBTD @ 6359'. Zones were swab tested for sand cleanup. A BHA & production tbg string were run in and anchored in well. End of tubing string @ 6252.36'. A new 1 1/2" bore rod pump was run in well on sucker rods. Well was placed on production via rod pump on 11/25/03.

RECEIVED
DEC 0 2 2003
DIV. OF OIL, GAS & MINING

I hereby certify that the foregoing is true and correct *(Printed/ Typed)*
Martha Hall

Title
Office Manager

Signature Martha Hall

Date
12/1/2003

THIS SPACE FOR FEDERAL OR STATE OFFICE USE

Approved by

Title

Date

Conditions of approval, if any, are attached. Approval of this notice does not warrant or which would entitle the applicant to conduct operations thereon.
certify that the applicant holds legal or equitable title to those rights in the subject lease

Office

Title 18 U.S.C. Section 1001 and Title 43 U.S.C. Section 1212, make it a crime for any person knowingly and willfully to make to any department or agency of the United States any false, fictitious and fraudulent statements or representations as to any matter within its jurisdiction

(Instructions on reverse)

FORM 3160-4
(July 1992)

013

SUBMIT IN DUPLICATE* (See other instructions ons reverse side)

FORM APPROVED
OMB NO. 1004-0137
Expires: February 28, 1995

UNITED STATES
DEPARTMENT OF THE INTERIOR
BUREAU OF LAND MANAGEMENT

5. LEASE DESIGNATION AND SERIAL NO.: UTU-74872

WELL COMPLETION OR RECOMPLETION REPORT AND LOG*

6. IF INDIAN, ALLOTTEE OR TRIBE NAME: NA

1a. TYPE OF WORK: OIL WELL [X] GAS WELL [ ] DRY [ ] Other

7. UNIT AGREEMENT NAME:

1b. TYPE OF WELL: NEW WELL [X] WORK OVER [ ] DEEPEN [ ] PLUG BACK [ ] DIFF RESVR. [ ] Other

8. FARM OR LEASE NAME, WELL NO.: Federal 1-31-8-18

2. NAME OF OPERATOR: INLAND RESOURCES INC.

9. WELL NO.: 43-047-34494

3. ADDRESS AND TELEPHONE NO.: 1401 17th St. Suite 1000 Denver, CO 80202

10. FIELD AND POOL OR WILDCAT: Monument Butte

4. LOCATION OF WELL (Report locations clearly and in accordance with any State requirements.*)
At Surface: 987' FNL & 685' FEL (NENE) Sec. 31, Twp 8S, Rng 18E
At top prod. Interval reported below
At total depth

11. SEC., T., R., M., OR BLOCK AND SURVEY OR AREA: Sec. 31, T8S, R18E

14. API NO.: 43-047-34494 DATE ISSUED: 2/21/2002

12. COUNTY OR PARISH: Uintah 13. STATE: UT

15. DATE SPUDDED: 10/16/03 16. DATE T.D. REACHED: 11/1/03 17. DATE COMPL. (Ready to prod.): 11/25/03 18. ELEVATIONS (DF, RKB, RT, GR, ETC.)*: 5099' GL 6011' KB 19. ELEV. CASINGHEAD:

20. TOTAL DEPTH, MD & TVD: 6395' 21. PLUG BACK T.D., MD & TVD: 6385' 22. IF MULTIPLE COMPL., HOW MANY*: 23. INTERVALS DRILLED BY: ------> ROTARY TOOLS: X CABLE TOOLS:

24. PRODUCING INTERVAL(S), OF THIS COMPLETION--TOP, BOTTOM, NAME (MD AND TVD)*: Green River 4466'-6234'

25. WAS DIRECTIONAL SURVEY MADE: No

26. TYPE ELECTRIC AND OTHER LOGS RUN: Dual Induction Guard, SP, Compensated Density, Compensated Neutron, GR, Caliper, Cement Bond Log Rec. 12-11-03 Rec. 11-25-03

27. WAS WELL CORED: No

23. CASING RECORD (Report all strings set in well)

CASING SIZE/GRADE	WEIGHT, LB./FT.	DEPTH SET (MD)	HOLE SIZE	TOP OF CEMENT, CEMENTING RECORD	AMOUNT PULLED
8-5/8" - J-55	24#	315'	12-1/4"	To surface with 150 sx Class "G" cmt	
5-1/2" - J-55	15.5#	6385'	7-7/8"	300 sx Premlite II and 425 sx 50/50 Poz	

29. LINER RECORD

SIZE	TOP (MD)	BOTTOM (MD)	SACKS CEMENT*	SCREEN (MD)

30. TUBING RECORD

SIZE	DEPTH SET (MD)	PACKER SET (MD)
2-7/8"	EOT @ 6252'	TA @ 6151'

31. PERFORATION RECORD (Interval, size and number)

INTERVAL	SIZE	SPF/NUMBER
(CP4,5) 6162-72', 6229'-34'	.038	4/60
(CP3) 6080-6089'	.038	4/36
(CP1) 5952-5961'	.038	4/36
(LODC) 5728-36', 5748-64',		
5775-88', 5803-11', 5822-33'	.038	2/90
(B1,2) 5386-5411', 5414-22', 5434-46'	.038	2/90
(GB6) 4649'-4654'	.038	4/20
(GB4) 4536'-4548'	.038	4/48
(GB2) 4466-4479'	.038	4/52

32. ACID, SHOT, FRACTURE, CEMENT SQUEEZE, ETC.

DEPTH INTERVAL (MD)	AMOUNT AND KIND OF MATERIAL USED
6162'-6234'	Frac w/ 31,000# 20/40 sand in 344 bbls fluid.
6080-6089'	Frac w/ 30,000# 20/40 sand in 338 bbls fluid.
5952-5961'	Frac w/ 25,000# 20/40 sand in 307 bbls fluid.
5728'-5811'	Frac w/ 240,000# 20/40 sand in 1563 bbls fluid.
5386'-5446'	Frac w/ 120,000# 20/40 sand in 844 bbls fluid.
4649-4654'	Frac w/ 30,000# 20/40 sand in 302 bbls fluid.
4536-4548'	Frac w/ 65,000# 20/40 sand in 514 bbls fluid.
4466-4479'	Frac w/ 49,750# 20/40 sand in 419 bbls fluid.

33.* PRODUCTION

DATE FIRST PRODUCTION: 11/25/03
PRODUCTION METHOD (Flowing, gas lift, pumping--size and type of pump): 2-1/2" x 1-1/2" x 15' RHAC Pump
WELL STATUS (Producing or shut-in): PRODUCING

DATE OF TEST	HOURS TESTED	CHOKE SIZE	PROD'N. FOR TEST PERIOD	OIL--BBLS.	GAS--MCF.	WATER--BBL.	GAS-OIL RATIO
10 day ave			----->	44	15	32	341

FLOW. TUBING PRESS.	CASING PRESSURE	CALCULATED 24-HOUR RATE	OIL-BBL.	GAS--MCF.	WATER--BBL.	OIL GRAVITY-API (CORR.)
		----->				

34. DISPOSITION OF GAS (Sold, used for fuel, vented, etc.): Sold & Used for Fuel

TEST WITNESSED BY:

RECEIVED
JAN 0 7 2004
DIV. OF OIL, GAS & MINING

35. LIST OF ATTACHMENTS

36. I hereby certify that the foregoing and attached information is complete and correct as determined from all available records

SIGNED: Brian Harris TITLE: Engineering Technician DATE: 1/5/2004

BDH

*(See Instructions and Spaces for Additional Data on Reverse Side)

Title 18 U.S.C. Section 1001, makes it a crime for any person knowingly and willfully to make to any department or agency of the United States any false, fictitious or fraudulent statements or representations as to any matter within its jurisdiction.

37. SUMMARY OF POROUS ZONES: (Show all important zones of porosity and contents thereof; cored intervals, and all drill-stem, tests, including depth interval tested, cushion used, time tool open, flowing and shut-in pressures, and recoveries);

FORMATION	TOP	BOTTOM	DESCRIPTION, CONTENTS, ETC.
			Well Name **Federal 1-31-8-18**

38. GEOLOGIC MARKERS

NAME	TOP MEAS. DEPTH	TOP TRUE VERT. DEPTH
Garden Gulch Mkr	**4048'**	
Garden Gulch 1	**4274'**	
Garden Gulch 2	**4388'**	
Point 3 Mkr	**4664'**	
X Mkr	**4867'**	
Y-Mkr	**4913'**	
Douglas Creek Mkr	**5047'**	
BiCarbonate Mkr	**5287'**	
B Limestone Mkr		
Castle Peak	**5877'**	
Basal Carbonate	**6278'**	
Total Depth (LOGGERS	**6395'**	

Inland
RESOURCES INC.

January 5, 2004

State of Utah, Division of Oil, Gas and Mining
Attn: Ms. Carol Daniels
P.O. Box 145801
Salt Lake City, Utah 84144-5801

Attn: Ms. Carol Daniels

Federal 1-31-8-18 (43-047-34494)
Uintah County, Utah

Dear Ms. Carol Daniels

Enclosed is a Well Completion or Recompletion Report and Log form (Form 3160-4). We are no longer sending Log copies since Dave Jull of Phoenix Surveys is already doing so.

If you should have any questions, please contact me at (303) 382-4449.

Sincerely,

Brian Harris
Engineering Tech

Enclosures

cc: Bureau of Land Management
Vernal District Office, Division of Minerals
Attn: Edwin I. Forsman
170 South 500 East
Vernal, Utah 84078

Well File – Denver
Well File – Roosevelt
Patsy Barreau/Denver
Bob Jewett/Denver
Matt Richmond/Roosevelt

RECEIVED
JAN 0 7 2004
DIV. OF OIL, GAS & MINING

FORM 3160-5
(June 1990)

UNITED STATES
DEPARTMENT OF THE INTERIOR
BUREAU OF LAND MANAGEMENT

FORM APPROVED
Budget Bureau No. 1004-0135
Expires: March 31, 1993

SUNDRY NOTICES AND REPORTS ON WELLS

Do not use this form for proposals to drill or to deepen or reentry a different reservoir.
Use "APPLICATION FOR PERMIT -" for such proposals

SUBMIT IN TRIPLICATE

5. Lease Designation and Serial No.
UTU-74872

6. If Indian, Allottee or Tribe Name
NA

7. If Unit or CA, Agreement Designation
N/A

1. Type of Well
[X] Oil Well [ ] Gas Well [ ] Other

8. Well Name and No.
FEDERAL 1-31-8-18

2. Name of Operator
INLAND PRODUCTION COMPANY

9. API Well No.
43-047-34494

3. Address and Telephone No.
Rt. 3 Box 3630, Myton Utah, 84052 435-646-3721

10. Field and Pool, or Exploratory Area
8 MILE FLAT NORTH

4. Location of Well (Footage, Sec., T., R., m., or Survey Description)
987 FNL 685 FEL NE/NE Section 31, T8S R18E

11. County or Parish, State
UINTAH COUNTY, UT

12. CHECK APPROPRIATE BOX(s) TO INDICATE NATURE OF NOTICE, REPORT, OR OTHER DATA

TYPE OF SUBMISSION	TYPE OF ACTION	
[X] Notice of Intent	[ ] Abandonment	[ ] Change of Plans
[ ] Subsequent Report	[ ] Recompletion	[ ] New Construction
[ ] Final Abandonment Notice	[ ] Plugging Back	[ ] Non-Routine Fracturing
	[ ] Casing Repair	[ ] Water Shut-Off
	[ ] Altering Casing	[ ] Conversion to Injection
	[ ] Other	[X] Dispose Water

(Note: Report results of multiple completion on Well Completion or Recompletion Report and Log form.)

13. Describe Proposed or Completed Operations (Clearly state all pertinent details, and give pertinent dates, including estimated date of starting any proposed work. If well is directionally drilled, give subsurface locations and measured and true vertical depths for all markers and zones pertinent to this work.)*

Formation water is produced to a steel storage tank. If the production water meets quality guidelines, it is transported to the Ashley, Monument Butte, Jonah, and Beluga water injection facilities by company or contract trucks. Subsequently, the produced water is injected into approved Class II wells to enhance Inland's secondary recovery project.

Water not meeting quality criteria, is disposed at Inland's Pariette #4 disposal well (Sec. 7, T9S R19E) or at State of Utah approved surface disposal facilities.

Accepted by the
Utah Division of
Oil, Gas and Mining
FOR RECORD ONLY

RECEIVED
FEB 13 2004
DIV. OF OIL, GAS & MINING

14. I hereby certify that the foregoing is true and correct

Signed Mandie Crozier Title Regulatory Specialist Date 2/11/2004

CC: UTAH DOGM

(This space for Federal or State office use)

Approved by _____ Title _____ Date _____

Conditions of approval, if any:

CC: Utah DOGM

Title 18 U.S.C. Section 1001, makes it a crime for any person knowingly and willfully to make to any department or agency of the United States any false, fictitious or fradulent statements or representations as to any matter within its jurisdiction.

United States Department of the Interior

BUREAU OF LAND MANAGEMENT
Utah State Office
P.O. Box 45155
Salt Lake City, UT 84145-0155

TAKE PRIDE IN AMERICA

IN REPLY REFER TO
3180
UT-922

June 30, 2005

Newfield Production Company
Attn: Kelly L. Donohoue
1401 Seventeenth Street, Suite 1000
Denver, Colorado 80202

Gentlemen:

The Sundance (Green River) Unit Agreement, Uintah County, Utah, was approved June 30, 2005. This agreement has been designated No. UTU82472X, and is effective July 1, 2005. The unit area embraces 11,143.86 acres, more or less.

Pursuant to regulations issued and effective June 17, 1988, all operations within the Sundance (Green River) Unit will be covered by your nationwide (Utah) oil and gas bond No. 0056.

The following leases embrace lands included within the unit area:

UTU0075174	UTU39713	UTU65970*	UTU79013*
UTU16539*	UTU39714	UTU74404	UTU79014*
UTU16540	UTU44429	UTU74835	UTU80915
UTU17424*	UTU64806*	UTU74872*	UTU82205
UTU18043	UTU65969	UTU75234	

* Indicates lease to be considered for segregation by the Bureau of Land Management pursuant to Section 18 (g) of the unit agreement and Public Law 86-705.

All lands and interests by State of Utah, Cause No. 228-08 are fully committed. Docket No 2005-009

Approval of this agreement does not warrant or certify that the operator thereof and other holders of operating rights hold legal or equitable title to those rights in the subject leases which are committed hereto.

RECEIVED
JUL 07 2005
DIV. OF OIL, GAS & MINING

We are of the opinion that the agreement is necessary and advisable in the public interest and for the purpose of more properly conserving natural resources. Certification-Determination, signed by the School and Institutional Trust Land Administration for the State of Utah, is attached to the enclosed agreement. We request that you furnish the State of Utah and all other interested principals with appropriate evidence of this approval.

Sincerely,

/s/ Terry Catlin

Terry Catlin
Acting Chief, Branch of Fluid Minerals

Enclosure

bcc: Mary Higgins w/enclosure
MMS - Data Management Division (Attn: James Sykes)
Trust Lands Administration
Division of Oil, Gas and Mining
Field Manager - Vernal w/enclosure
File - Sundance (Green River) Unit w/enclosure
Agr. Sec. Chron
Fluid Chron
Central Files

UT922:TAThompson:tt:06/30/2005

Entity Form 6

"C" Change from one existing entity to another existing entity

API	Well	Sec	Twsp	Rng	Entity	Entity Eff Date
4301316218	CASTLE DRAW 16-10-9-17	10	090S	170E	8120 to 14844	9/20/2005
4301330568	FEDERAL 8-10-9-17	10	090S	170E	8000 to 14844	9/20/2005
4301332502	FEDERAL 9-10-9-17	10	090S	170E	14325 to 14844	9/20/2005
4301331593	MON FED 11-11-9-17Y	11	090S	170E	11904 to 14844	9/20/2005
4301332486	FEDERAL 5-11-9-17	11	090S	170E	14285 to 14844	9/20/2005
4301332510	FEDERAL 13-11-9-17	11	090S	170E	14273 to 14844	9/20/2005
4301332544	FEDERAL 12-11-9-17	11	090S	170E	14613 to 14844	9/20/2005
4301332704	FEDERAL 12-14-9-17	14	090S	170E	14786 to 14844	9/20/2005
4301331023	FEDERAL 15-1-B	15	090S	170E	10201 to 14844	9/20/2005
4304734494	FEDERAL 1-31-8-18	31	080S	180E	13927 to 14844	9/20/2005
4304734495	FEDERAL 2-31-8-18	31	080S	180E	13959 to 14844	9/20/2005
4304734496	FEDERAL 3-31-8-18	31	080S	180E	13915 to 14844	9/20/2005
4304734497	FEDERAL 4-31-8-18	31	080S	180E	13942 to 14844	9/20/2005
4304734498	FEDERAL 5-31-8-18	31	080S	180E	13898 to 14844	9/20/2005
4304734499	FEDERAL 6-31-8-18	31	080S	180E	13960 to 14844	9/20/2005
4304734500	FEDERAL 7-31-8-18	31	080S	180E	13925 to 14844	9/20/2005
4304734501	FEDERAL 11-31-8-18	31	080S	180E	13924 to 14844	9/20/2005
4304734502	FEDERAL 12-31-8-18	31	080S	180E	13958 to 14844	9/20/2005
4304734503	FEDERAL 13-31-8-18	31	080S	180E	14324 to 14844	9/20/2005
4304734504	FEDERAL 8-31-8-18	31	080S	180E	13961 to 14844	9/20/2005
4304734930	FEDERAL 10-31-8-18	31	080S	180E	13986 to 14844	9/20/2005
4304734931	FEDERAL 9-31-8-18	31	080S	180E	13963 to 14844	9/20/2005
4304731116	NGC ST 33-32	32	080S	180E	6210 to 14844	9/20/2005
4304732500	STATE 31-32	32	080S	180E	11645 to 14844	9/20/2005
4304732685	SUNDANCE ST 5-32	32	080S	180E	11781 to 14844	9/20/2005
4304732740	SUNDANCE ST 1-32R-8-18	32	080S	180E	11886 to 14844	9/20/2005
4304732741	SUNDANCE ST 3-32	32	080S	180E	12059 to 14844	9/20/2005
4304732827	SUNDANCE ST 4-32	32	080S	180E	12106 to 14844	9/20/2005
4304734458	SUNDANCE 7-32-8-18	32	080S	180E	13987 to 14844	9/20/2005
4304734459	SUNDANCE 8-32-8-18	32	080S	180E	14047 to 14844	9/20/2005
4304734460	SUNDANCE 9-32-8-18	32	080S	180E	13988 to 14844	9/20/2005
4304734461	SUNDANCE 11-32-8-18	32	080S	180E	13962 to 14844	9/20/2005
4304734462	SUNDANCE 12-32-8-18	32	080S	180E	14031 to 14844	9/20/2005
4304734463	SUNDANCE 13-32-8-18	32	080S	180E	13964 to 14844	9/20/2005
4304734464	SUNDANCE 14-32-8-18	32	080S	180E	14046 to 14844	9/20/2005

Corporations Section
P.O.Box 13697
Austin, Texas 78711-3697

Geoffrey S. Connor
Secretary of State

Office of the Secretary of State

The undersigned, as Secretary of State of Texas, does hereby certify that the attached is a true and correct copy of each document on file in this office as described below:

Newfield Production Company
Filing Number: 41530400

Articles of Amendment September 02, 2004

In testimony whereof, I have hereunto signed my name officially and caused to be impressed hereon the Seal of State at my office in Austin, Texas on September 10, 2004.

Secretary of State

ARTICLES OF AMENDMENT
TO THE
ARTICLES OF INCORPORATION
OF
INLAND PRODUCTION COMPANY

FILED
In the Office of the
Secretary of State of Texas

SEP 02 2004

Corporations Section

Pursuant to the provisions of Article 4.04 of the Texas Business Corporation Act (the "TBCA"), the undersigned corporation adopts the following articles of amendment to the articles of incorporation:

ARTICLE 1 – Name

The name of the corporation is Inland Production Company.

ARTICLE 2 – Amended Name

The following amendment to the Articles of Incorporation was approved by the Board of Directors and adopted by the shareholders of the corporation on August 27, 2004.

The amendment alters or changes Article One of the Articles of Incorporation to change the name of the corporation so that, as amended, Article One shall read in its entirety as follows:

"ARTICLE ONE – The name of the corporation is Newfield Production Company."

ARTICLE 3 – Effective Date of Filing

This document will become effective upon filing.

The holder of all of the shares outstanding and entitled to vote on said amendment has signed a consent in writing pursuant to Article 9.10 of the TBCA, adopting said amendment, and any written notice required has been given.

IN WITNESS WHEREOF, the undersigned corporation has executed these Articles of Amendment as of the 1st day of September, 2004.

INLAND RESOURCES INC.

By: Susan G. Riggs
Susan G. Riggs, Treasurer

United States Department of the Interior

BUREAU OF LAND MANAGEMENT
Utah State Office
P.O. Box 45155
Salt Lake City, UT 84145-0155
http://www.blm.gov

TAKE PRIDE IN AMERICA

IN REPLY REFER TO:
3106
(UT-924)

September 16, 2004

Memorandum

To: Vernal Field Office

From: Acting Chief, Branch of Fluid Minerals

Subject: Merger Approval

Attached is an approved copy of the name change recognized by the Utah State Office. We have updated our records to reflect the merger from Inland Production Company into Newfield Production Company on September 2, 2004.

Michael L Coulthard

Michael Coulthard
Acting Chief, Branch of
Fluid Minerals

Enclosure
1. State of Texas Certificate of Registration

cc: MMS, Reference Data Branch, James Sykes, PO Box 25165, Denver CO 80225
State of Utah, DOGM, Attn: Earlene Russell, PO Box 145801, SLC UT 84114
Teresa Thompson
Joe Incardine
Connie Seare

UTSL-
071572A
065914

UTU-

02458
03563
03563A
04493
05843
07978
09803
017439B
017985
017991
017992
018073
019222
020252
020252A
020254
020255
020309D
022684A
027345
034217A
035521
035521A
038797
058149
063597A
075174
096547
096550

10760
11385
13905
15392
15855
16535
16539
16544
17036
17424
18048
18399
19267
26026A
30096
30103
31260
33992
34173
34346
36442
36846
38411
38428
38429
38431
39713
39714
40026
40652
40894
41377
44210
44426
44430
45431
47171
49092
49430
49950
50376
50385
50376
50750
51081
52013
52018
58546
61052
62848
63073B
63073D
63073E
63073O
64917
64379
64380
64381
64805
64806
64917
65207
65210
65635
65967
65969
65970
66184
66185
66191
67168
67170
67208
67549
67586
67845
68105
68548
68618
69060
69061
69744
70821
72103
72104
72105
72106
72107
72108
73086
73087
73807
73088
73089
73520A
74108
74805
74806
74807
74808
74389
74390
74391
74392
74393
74398
74399
74400
74404
74405
74406
74411
74805
74806
74826
74827
74835
74868
74869
74870
74872
74970
75036
75037
75038
75039
75075
75078
75089
75090
75234
75238
76239
76240
76241
76560
76561
76787
76808
76813
76954
76956
77233
77234
77235
77337
77338
77339
77357
77359
77365
77369
77370
77546
77553
77554
78022
79013
79014
79015
79016
79017
79831
79832
79833
79831
79834
80450
80915
81000

63073X
63098A
68528A
72086A
72613A
73520X
74477X
75023X
76189X
76331X
76788X
77098X
77107X
77236X
77376X
78560X
79485X
79641X
80207X
81307X

Division of Oil, Gas and Mining

OPERATOR CHANGE WORKSHEET

ROUTING
1. GLH
2. CDW
3. FILE

014

Change of Operator (Well Sold) | Designation of Agent/Operator

X Operator Name Change | **Merger**

The operator of the well(s) listed below has changed, effective: **9/1/2004**

FROM: (Old Operator):	**TO:** (New Operator):
N5160-Inland Production Company	N2695-Newfield Production Company
Route 3 Box 3630	Route 3 Box 3630
Myton, UT 84052	Myton, UT 84052
Phone: 1-(435) 646-3721	Phone: 1-(435) 646-3721

CA No. **Unit:**

WELL(S)

NAME	SEC	TWN	RNG	API NO	ENTITY NO	LEASE TYPE	WELL TYPE	WELL STATUS	
HANCOCK 14-23-4-1	23	040S	010W	4304733080	12331	Fee	OW	P	
HANCOCK 11-23-4-1	23	040S	010W	4304733081	12355	Fee	OW	P	
HANCOCK 4-26-4-1	26	040S	010W	4304733082	12492	Fee	OW	P	
ODEKIRK SPRINGS 1A-35-8-17	35	080S	170E	4304733549	12909	Federal	OW	P	
ODEKIRK SPRINGS 15-35-8-17	35	080S	170E	4304733550	13094	Federal	OW	P	
ODEKIRK SPRING 13-36-8-17	36	080S	170E	4304733076	12420	State	D	PA	
SUNDANCE FED 14-31-8-18	31	080S	180E	4304734287		Federal	OW	APD	K
FEDERAL 1-31-8-18	31	080S	180E	4304734494	13927	Federal	OW	P	K
FEDERAL 2-31-8-18	31	080S	180E	4304734495	13959	Federal	OW	OPS	K
SUNDANCE 7-32-8-18	32	080S	180E	4304734458	13987	State	OW	P	K
SUNDANCE 8-32-8-18	32	080S	180E	4304734459	14047	State	OW	P	K
SUNDANCE 9-32-8-18	32	080S	180E	4304734460	13988	State	OW	OPS	K
SUNDANCE 11-32-8-18	32	080S	180E	4304734461	13962	State	OW	P	K
SUNDANCE 12-32-8-18	32	080S	180E	4304734462	14031	State	OW	P	K
SUNDANCE 13-32-8-18	32	080S	180E	4304734463	13964	State	OW	P	K
SUNDANCE 14-32-8-18	32	080S	180E	4304734464	14046	State	OW	P	K
SUNDANCE 15-32-8-18	32	080S	180E	4304734465	13978	State	OW	P	K
SUNDANCE 16-32-8-18	32	080S	180E	4304734466	14028	State	OW	OPS	K
FEDERAL 2-6-9-18	06	090S	180E	4304734013		Federal	OW	APD	K
FEDERAL 3-6-9-18	06	090S	180E	4304734425		Federal	OW	APD	K

OPERATOR CHANGES DOCUMENTATION

Enter date after each listed item is completed

1. (R649-8-10) Sundry or legal documentation was received from the **FORMER** operator on: 9/15/2004
2. (R649-8-10) Sundry or legal documentation was received from the **NEW** operator on: 9/15/2004
3. The new company was checked on the **Department of Commerce, Division of Corporations Database on:** 2/23/2005
4. Is the new operator registered in the State of Utah: YES Business Number: 755627-0143
5. If **NO**, the operator was contacted contacted on:

6a. (R649-9-2)Waste Management Plan has been received on: IN PLACE

6b. Inspections of LA PA state/fee well sites complete on: waived

7. **Federal and Indian Lease Wells:** The BLM and or the BIA has approved the merger, name change, or operator change for all wells listed on Federal or Indian leases on: BLM BIA

8. **Federal and Indian Units:**
The BLM or BIA has approved the successor of unit operator for wells listed on: n/a

9. **Federal and Indian Communization Agreements ("CA"):**
The BLM or BIA has approved the operator for all wells listed within a CA on: na/

10. **Underground Injection Control ("UIC")** The Division has approved UIC Form 5, **Transfer of Authority to Inject,** for the enhanced/secondary recovery unit/project for the water disposal well(s) listed on: 2/23/2005

DATA ENTRY:

1. Changes entered in the **Oil and Gas Database on:** 2/28/2005
2. Changes have been entered on the **Monthly Operator Change Spread Sheet on:** 2/28/2005
3. Bond information entered in RBDMS on: 2/28/2005
4. Fee/State wells attached to bond in RBDMS on: 2/28/2005
5. Injection Projects to new operator in RBDMS on: 2/28/2005
6. Receipt of Acceptance of Drilling Procedures for APD/New on: waived

FEDERAL WELL(S) BOND VERIFICATION:

1. Federal well(s) covered by Bond Number: UT 0056

INDIAN WELL(S) BOND VERIFICATION:

1. Indian well(s) covered by Bond Number: 61BSBDH2912

FEE & STATE WELL(S) BOND VERIFICATION:

1. (R649-3-1) The **NEW** operator of any fee well(s) listed covered by Bond Number 61BSBDH2919

2. The **FORMER** operator has requested a release of liability from their bond on: n/a*
The Division sent response by letter on: n/a

LEASE INTEREST OWNER NOTIFICATION:

3. (R649-2-10) The **FORMER** operator of the fee wells has been contacted and informed by a letter from the Division of their responsibility to notify all interest owners of this change on: n/a

COMMENTS:

*Bond rider changed operator name from Inland Production Company to Newfield Production Company - **received 2/23/05**

OMB No. 2040-0042
Form Approved. Expires 6-30-98

United States Environmental Protection Agency
Washington, DC 20460

EPA

Application To Transfer Permit

Name and Address of Existing Permittee	Name and Address of Surface Owner

Locate Well and Outline Unit on Section Plat- 640 Acres

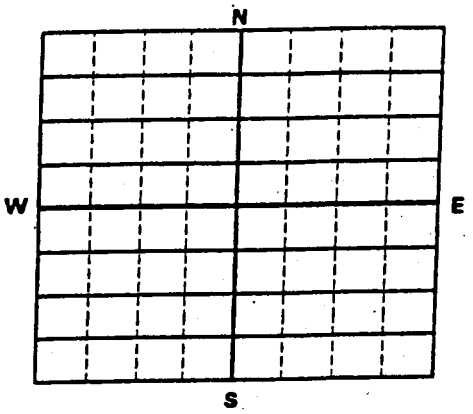

State	County	Permit Number

Surface Location Description
___ 1/4 of ___ 1/4 of ___ 1/4 of ___ 1/4 of Section___ Township___ Range___

Locate well in two directions from nearest lines of quarter section and drilling unit

Surface Location_____ft. from (N/S)_____Line of quarter section and_____ft. from (E/W)_____Line of quarter section.

Well Activity	Well Status	Type of Permit
___Class I	___Operating	___Individual
___Class II	___Modification/Conversion	___Area
___Brine Disposal	___Proposed	Number of Wells___
___Enhanced Recovery		
___Hydrocarbon Storage		
___Class III		
___Other		

Lease Number Well Number

Name(s) and Address(es) of New Owner(s)	Name and Address of New Operator

Attach to this application a written agreement between the existing and new permittee containing a specific date for transfer of permit responsibility, coverage, and liability between them.

The new permittee must show evidence of financial responsibility by the submission of a surety bond, or other adequate assurance, such as financial statements or other materials acceptable to the Director.

Certification

I certify under the penalty of law that I have personally examined and am familiar with the information submitted in this document and all attachments and that, based on my inquiry of those individuals immediately responsible for obtaining the information, I believe that the information is true, accurate, and complete. I am aware that there are significant penalties for submitting false information, including the possibility of fine and imprisonment. (Ref. 40 CFR 144.32)

Name and Official Title *(Please type or print)*	Signature	Date Signed

UNITED STATES ENVIRONMENTAL PROTECTION AGENCY
WASHINGTON, DC 20460

EPA

PLUGGING RECORD

NAME AND ADDRESS OF PERMITTEE

NAME AND ADDRESS OF CEMENTING COMPANY

STATE | COUNTY | PERMIT NUMBER

LOCATE WELL AND OUTLINE UNIT ON SECTION PLAT — 640 ACRES

N
W E
S

SURFACE LOCATION DESCRIPTION

¼ OF ¼ OF ¼ SECTION TOWNSHIP RANGE

LOCATE WELL IN TWO DIRECTIONS FROM NEAREST LINES OF QUARTER SECTION AND DRILLING UNIT

Surface Location _____ ft. from (N/S) _____ Line of quarter section

and _____ ft. from (E/W) _____ Line of quarter section

TYPE OF AUTHORIZATION

☐ Individual Permit
☐ Area Permit
☐ Rule

Number of Wells _____

Lease Name

Describe in detail the manner in which the fluid was placed and the method used in introducing it into the hole

CASING AND TUBING RECORD AFTER PLUGGING

SIZE	WT(LB/FT)	TO BE PUT IN WELL (FT)	TO BE LEFT IN WELL (FT)	HOLE SIZE

WELL ACTIVITY

☐ CLASS I
☐ CLASS II
☐ Brine Disposal
☐ Enhanced Recovery
☐ Hydrocarbon Storage
☐ CLASS III

METHOD OF EMPLACEMENT OF CEMENT PLUGS

☐ The Balance Method
☐ The Dump Bailer Method
☐ The Two-Plug Method
☐ Other

CEMENTING TO PLUG AND ABANDON DATA:	PLUG #1	PLUG #2	PLUG #3	PLUG #4	PLUG #5	PLUG #6	PLUG #7
Size of Hole or Pipe in which Plug Will Be Placed (inches)							
Depth to Bottom of Tubing or Drill Pipe (ft.)							
Sacks of Cement To Be Used (each plug)							
Slurry Volume To Be Pumped (cu. ft.)							
Calculated Top of Plug (ft.)							
Measured Top of Plug (if tagged ft.)							
Slurry Wt. (Lb./Gal.)							
Type Cement or Other Material (Class III)							

LIST ALL OPEN HOLE AND/OR PERFORATED INTERVALS

From	To	From	To

Signature of Cementer or Authorized Representative

Signature of EPA Representative

CERTIFICATION

I certify under penalty of law that this document and all attachments were prepared under my direction or supervision in accordance with a system designed to assure that qualified personnel properly gather and evaluate the information submitted. Based on my inquiry of the person or persons who manage the system, or those persons directly responsible for gathering the information, the information submitted is, to the best of my knowledge and belief, true, accurate, and complete. I am aware that there are significant penalties for submitting false information, including the possibility of fine and imprinsonment for knowing violations. (REF. 40 CFR 122.22)

NAME AND OFFICIAL TITLE *(Please type or print)* | SIGNATURE | DATE SIGNED

Form Approved OMB No. 2040-0042. Expires 6-30-98

UNITED STATES ENVIRONMENTAL PROTECTION AGENCY
WASHINGTON, DC 20460

EPA

WELL REWORK RECORD

NAME AND ADDRESS OF PERMITTEE	NAME AND ADDRESS OF CONTRACTOR

LOCATE WELL AND OUTLINE UNIT ON SECTION PLAT — 640 ACRES

N
W E
S

STATE	COUNTY	PERMIT NUMBER

SURFACE LOCATION DESCRIPTION
___ 1/4 of ___ 1/4 of ___ 1/4 of ___ 1/4 of Section___ Township___ Range___

LOCATE WELL IN TWO DIRECTIONS FROM NEAREST LINES OF QUARTER SECTION AND DRILLING UNIT

Surface Location ____ ft. from (N/S) ____ Line of quarter section

and ____ ft. from (E/W) ____ Line of quarter section

WELL ACTIVITY		TYPE OF PERMIT
☐ Brine Disposal ☐ Enhanced Recovery ☐ Hydrocarbon Storage	Total Depth Before Rework	☐ Individual ☐ Area Number of Wells ____
	Total Depth After Rework	
Lease Name	Date Rework Commenced	Well Number
	Date Rework Completed	

WELL CASING RECORD — BEFORE REWORK

Casing		Cement		Perforations		Acid or Fracture Treatment Record
Size	Depth	Sacks	Type	From	To	

WELL CASING RECORD — AFTER REWORK *(Indicate Additions and Changes Only)*

Casing		Cement		Perforations		Acid or Fracture Treatment Record
Size	Depth	Sacks	Type	From	To	

DESCRIBE REWORK OPERATIONS IN DETAIL USE ADDITIONAL SHEETS IF NECESSARY	WIRE LINE LOGS, LIST EACH TYPE	
	Log Types	Logged Intervals

CERTIFICATION

I certify under the penalty of law that I have personally examined and am familiar with the information submitted in this document and all attachments and that, based on my inquiry of those individuals immediately responsible for obtaining the information, I believe that the information is true, accurate, and complete. I am aware that there are significant penalties for submitting false information, including the possibility of fine and imprisonment. (Ref. 40 CFR 144.32).

NAME AND OFFICIAL TITLE *(Please type or print)*	SIGNATURE	DATE SIGNED

UNITED STATES ENVIRONMENTAL PROTECTION AGENCY
REGION VIII
999 18th STREET - SUITE 300
DENVER, COLORADO 80202-2466

SUBJECT: **GROUND WATER SECTION GUIDANCE NO. 34**
Cement bond logging techniques and interpretation.

FROM: Tom Pike, Chief
UIC Direct Implementation Section

TO: All Section Staff
Montana Operations Office

These procedures are to be followed when running and interpreting cement bond logs for injection and production (area of review) wells.

PART I - PREPARE THE WELL

Allow cement to cure for a sufficient time to develop full compressive strength. A safe bet is to let the cement cure for 72 hours. If you run the bond log before the cement achieves its maximum compressive strength, the log may show poor bonding. Check cement handbooks for curing times.

Circulate the hole with a fluid (either water or mud) of uniform consistency. Travel times are influenced by the type of fluid in the hole. If the fluid changes between two points, the travel times may "drift," causing difficulty in interpretation and quality control.

Be prepared to run the cement bond log under pressure to reduce the effects of micro-annulus. Micro-annulus may be caused by several reasons, but the existence of a micro-annulus does not necessarily destroy the cement's ability to form a hydraulic seal. If the log shows poor bonding, rerun the log with the slightly more pressure on the casing as was present when the cement cured. This will cause the casing to expand against the cement and close the micro-annulus.

PART II - PARAMETERS TO LOG

Amplitude (mV) - This curve shows how much acoustic signal reaches a receiver and is an important indicator of cement bond. Record the amplitude on the 3 foot spaced receiver.

Travel time (µs) - This curve shows the amount of time it takes an acoustic signal to travel between the source and a receiver. For free pipe of a given size and weight, the travel time between points is very predictable, although

Printed on Recycled Paper

PART IV - QUALITY CONTROL

Compare the tool calibration data to see if the tool "drifts" during logging. Differences in the calibration data may require you to re-log the well to obtain reliable data.

Compare repeat sections to see if logging results are repeatable.

Check the logged free pipe travel times with the service company charts for the specific tool and casing size used. Since the travel times depend on such factors as casing weight, type of fluid in the hole, etc., these charts should be used only as guidelines. When you are confident of the free-pipe travel times as seen on the log, use them. When interpreting the log, a decrease in travel time (faster times) with simultaneous reduction of amplitude may show a de-centered tool. A 4 to 5 micro-second (µs) decrease in travel time corresponds to about a 35% loss of amplitude. A decrease in travel time more than 4 to 5 µs is unacceptable.

PART V - LOG INTERPRETATION

Do not rely on the service company charts for amplitudes corresponding to a good bond. These amplitudes depend on many factors: type of cement used, fluid in the hole, etc.

To estimate bond index, choose intervals on the log that correspond to 0% bond and 100% bond. Read the amplitude corresponding to 100% bond from the best-bonded interval on the log (NOTE: the accuracy of this amplitude reading is very critical to the bond index calculations). Next, find the amplitude corresponding to 0% bond. Some bond logs may not include a section with free pipe. In this instance, choose the appropriate free-pipe travel time from the service company charts for your specific tool, or from the generalized chart (TABLE 2) at the end of this guidance. To calculate a bond index of 80%, use the following equation:

$$A_{80} = 10^{[(0.2)\log(A_0) + (0.8)\log(A_{100})]}$$

where:

A_{80} = Amplitude at 80% bond (mV)

Printed on Recycled Paper

Using the values from the example above, your chart will look like that shown below:

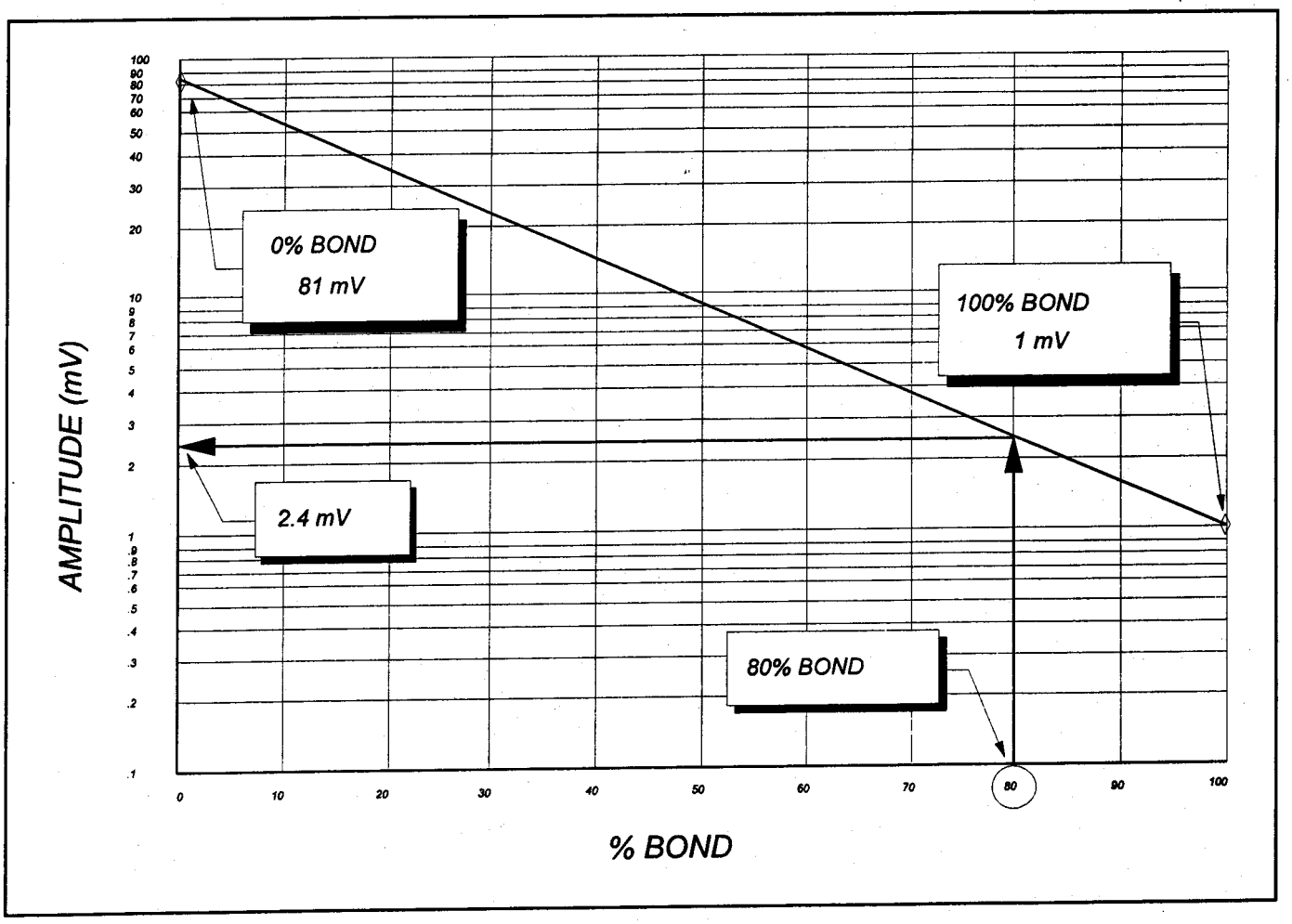

In this example, <u>80% bond shows an amplitude of 2.4 mV</u>.

A convenient way to evaluate the log is to draw a line on the bond log's **amplified** amplitude (5X) track corresponding to the calculated 80% bond amplitude. Whenever the logged **amplified** amplitude (5X) curve drops below (to the left of) the drawn line, this indicates a bond of 80% or more.

PART IV - CONCLUSIONS - REMINDERS

Different pipe weights and cement types will affect the log readings, so be mindful of these factors in wells with varying pipe weights and staged cement or squeeze jobs.

Printed on Recycled Paper

TABLE 2 - TRAVEL TIMES AND AMPLITUDES FOR FREE PIPE
(3 FT RECEIVER)

CASING SIZE (in)	CASING WEIGHT (lb/ft)	TRAVEL TIME (µs)		AMPLITUDE (mV)
		1-11/16" TOOL	3-5/8" TOOL	
4-1/2	9.5	252	233	81
	11.6	250	232	81
	13.5	249	230	81
5	15.0	257	238	76
	18.0	255	236	76
	20.3	253	235	76
5-1/2	15.5	266	248	72
	17.0	265	247	72
	20.0	264	245	72
	23.0	262	243	72
7	23.0	291	271	62
	26.0	289	270	62
	29.0	288	268	62
	32.0	286	267	62
	35.0	284	265	62
	38.0	283	264	62
7-5/8	26.4	301	281	59
	29.7	299	280	59
	33.7	297	278	59
	39.0	295	276	59
9-5/8	40.0	333	313	51
	43.5	332	311	51
	47.0	330	310	51
	53.5	328	309	51
10-3/4	40.5	354	333	48
	45.5	352	332	48
	51.0	350	330	48
	55.5	349	328	48

FCD:March 31, 1994:RCT/RCT/k:\cbl.sop

Printed on Recycled Paper

SUBJECT: GROUND WATER SECTION GUIDANCE NO. 35
Procedures to follow when excessive annular pressure is observed on a well.

FROM: Tom Pike, Chief
UIC Direct Implementation Section

TO: All Section Staff
Montana Operations Office

The following procedure is intended as an aid to UIC field inspectors when they encounter excessive annular pressure on a well. Excessive annular pressure is defined as 100 psi or 10% of the tubing pressure, whichever is less.

Usually, annular pressure is a direct indication of a loss of mechanical integrity. In some instances, recurring annular pressure may be caused by fluctuations in the temperature of the injected fluid. These temperature fluctuations may cause the annular pressure to increase when a hot fluid is being injected and decrease as the temperature of the injected fluid cools. The presence of temperature-induced pressure on the annulus does not indicate a malfunction in the casing/tubing/packer system and is not considered a loss of mechanical integrity. Wells exhibiting recurring temperature-induced annular pressure may be allowed to continue injecting if a temperature monitoring program is approved and followed.

This guidance was written to help determine the cause of annular pressure. When the procedures in this guidance are followed, any major mechanical integrity problems (a breech in the casing/tubing/packer system) will become apparent quickly. A quick determination will allow the operator to begin follow-up procedures immediately to prevent contamination to USDWs.

Use Section Guidance No. 35 to determine <u>if</u> the well has experienced a loss of mechanical integrity. If you find that there <u>is</u> a loss of mechanical integrity, use *Headquarters Guidance No. 76. - Follow-up to loss of Mechanical Integrity for Class II Wells* to bring the well back into compliance. The use of Section Guidance No. 35 is not to be confused with, nor does it supersede any provision of Headquarters Guidance No. 76. Instead, the two guidance documents are meant to work together to identify and to remedy any potential mechanical integrity failure.

A flowchart for Section Guidance No. 35 is included for quick reference in the field.

PROCEDURES TO FOLLOW WHEN EXCESSIVE ANNULAR PRESSURE IS OBSERVED

During field inspections, the following procedures should be followed when excessive annular pressure is observed. Excessive annular pressure is defined as 100 psi or 10% of the tubing pressure, whichever is less.

NOTE CONDITIONS AT THE WELL

Note tubing and annular pressure readings, and the operating status of the well (injecting, shut-in, etc.) on the UIC inspection form.

SEE IF ANNULUS PRESSURE WILL BLEED-OFF

Attempt to bleed the pressure from the annulus by having the operator open the annulus (for a maximum of sixty seconds).

It is the operator's responsibility to collect and dispose of any fluids bled from the annulus.

DID THE ANNULAR PRESSURE BLEED TO 0 PSI WITHIN SIXTY SECONDS?

YES	NO
Have the operator close the annulus.	Have the operator close the annulus.
On your inspection form note the volume of fluid (or gas) bled from the annulus during the sixty seconds, and the tubing and annulus pressures.	On your inspection form note the volume of fluid (or gas) bled from the annulus during the sixty seconds, and the tubing and annulus pressures.
	Have the operator shut the well in for 2 hours, and if possible, bleed pressure from the injection tubing. Record the tubing and annulus pressure after two hours.
	Bleed off the annulus for 60 seconds. Record the tubing and annulus pressures after bleed-off, and estimate the volume bled off.
	INFORM THE OPERATOR THAT THE WELL HAS AN APPARENT MECHANICAL INTEGRITY FAILURE and provide the operator with the guidance that discusses OPERATOR RESPONSIBILITIES FOLLOWING MECHANICAL INTEGRITY FAILURES.
	END PROCEDURE.

SEE IF PRESSURE RETURNS WITHIN 15 MINUTES

Continue to monitor the well for annulus pressure return for at least 15 minutes after the annulus valve is closed.

DOES PRESSURE RETURN TO THE ANNULUS AFTER 15 MINUTES?

YES

On your inspection form, note the annulus and tubing pressures recorded after 15 minutes.

Have the operator shut the well in for 2 hours, and if possible, bleed pressure from the injection tubing. Record the tubing and annulus pressure after two hours.

Bleed off the annulus for 60 seconds. Record the tubing and annulus pressures after bleed-off, and estimate the volume bled off.

INFORM THE OPERATOR THAT THE WELL HAS AN APPARENT MECHANICAL INTEGRITY FAILURE and provide the operator with the guidance that discusses OPERATOR RESPONSIBILITIES FOLLOWING MECHANICAL INTEGRITY FAILURES.

END PROCEDURE.

NO

Require the operator to monitor and report to EPA with the annulus and tubing pressures for at least 14 days to see if pressure returns to the annulus.

Instruct the operator to contact EPA as soon as any pressure returns to the annulus.

DOES PRESSURE RETURN TO THE ANNULUS WITHIN 14 DAYS?

YES

EPA Technical Expert will design a proper Mechanical Integrity test.

Compliance officer will require the operator to conduct the test within 14 days.

NO

The well is considered to have mechanical integrity.

END PROCEDURE.

DOES THE WELL PASS THE MIT?

YES

Require the operator to monitor and report to EPA with the annulus and tubing pressures for at least 14 days to see if pressure returns to the annulus.

Instruct the operator to contact EPA as soon as any pressure returns to the

NO

INFORM THE OPERATOR THAT THE WELL HAS AN APPARENT MECHANICAL INTEGRITY FAILURE and provide the operator with the guidance that discusses OPERATOR RESPONSIBILITIES FOLLOWING MECHANICAL INTEGRITY FAILURES.

END PROCEDURE.

DOES PRESSURE RETURN TO THE ULUS WITHIN DAYS?	YES	NO
	EPA Technical Expert will design a proper Monitoring Program to determine the cause of recurrent annular pressure. Compliance officer will require the operator to begin the Monitoring program within 14 days. Conduct unannounced inspections at the well during the Monitoring Program.	The well is considered to have mechanical integrity. **END PROCEDURE.**

IS THE ANNULUS PRESSURE CAUSED BY TEMPERATURE?	YES	NO
	EPA Technical Expert will design a proper Temperature Monitoring Program that allows injection to continue while tracking relationship between temperature and recurrent annulus pressure. Compliance officer will require the operator to cease injection immediately if the operator fails to follow the Temperature Monitoring Program. Compliance officer will require the operator to cease injection immediately if recurrent annular pressures cannot be explained by the results of the Temperature Monitoring Program. Compliance officer will require annual Mechanical Integrity Tests using the standard pressure method.	INFORM THE OPERATOR THAT THE WELL HAS AN APPARENT MECHANICAL INTEGRITY FAILURE and provide the operator with the guidance that discusses OPERATOR RESPONSIBILITIES FOLLOWING MECHANICAL INTEGRITY FAILURES. **END PROCEDURE.**

14-DAY PRESSURE MONITORING

Please use this form to report data for a 14-day period after pressure is bled from the tubing-casing annulus. Please telephone EPA in Denver as soon as possible when/if pressure returns to the annulus. This data will be used to determine the cause(s) of recurrent annular pressure.

NOTE: DO NOT BLEED PRESSURE FROM ANNULUS DURING THE 14-DAY MONITORING PERIOD.

	DATE	TIME	ANNULUS PRESSURE (psi)	TUBING PRESSURE (psi)	WELL INJECTING (YES/NO)
1					
2					
3					
4					
5					
6					
7					
8					
9					
10					
11					
12					
13					
14					

WELL NAME:_____

ATOR:_____

SIGNATURE:_____ DATE:_____

RCD:April 12, 1994:RCT/RCT/k:\guidance.35

EXCESSIVE ANNULAR PRESSURE

4/12/94

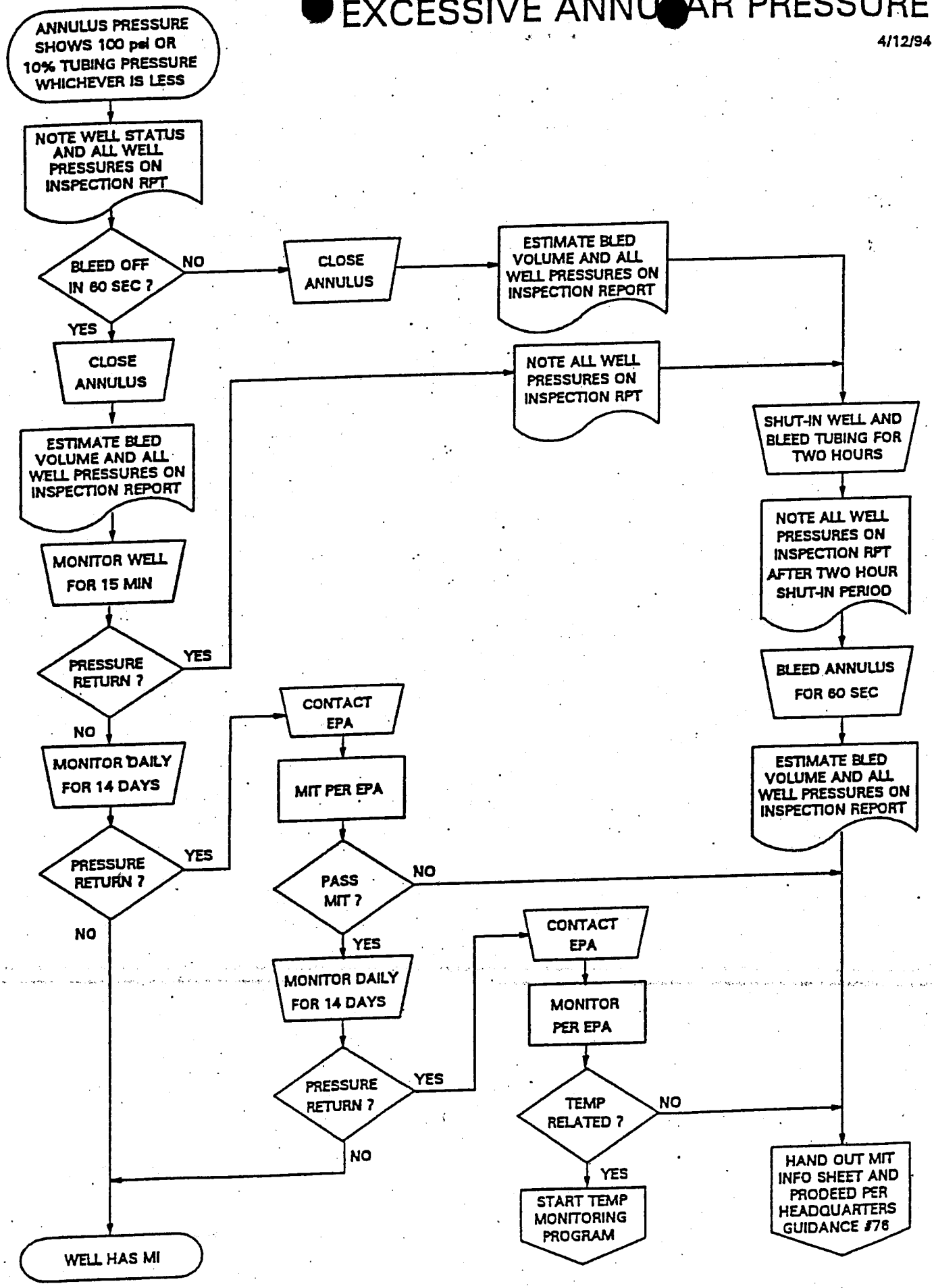

UNITED STATES ENVIRONMENTAL PROTECTION AGENCY
REGION VIII
999 18th STREET - SUITE 500
DENVER, COLORADO 80202-2466

OPERATOR RESPONSIBILITIES FOLLOWING MECHANICAL INTEGRITY FAILURES

1) IMMEDIATELY - Cease injection and shut-in the well as rapidly as feasible. In no case shall the well remain in operation beyond 48 hours unless Tom Pike, Chief, Underground Injection Control Implementation (UIC-I) Section [(303) 293-1544] allows for temporary operation of the well.

2) WITHIN 24 HOURS - Verbally notify the UIC-I Section Chief of MIT failure even in cases where the failure is detected during a test which was witnessed by a UIC inspector.

3) WITHIN 5 DAYS - Submit a written follow-up report documenting test results, remediation taken or a proposed remediation plan and any limits established by the Director on appropriate volume or time for continued injection operation.

Printed on Recycled Paper

UNITED STATES ENVIRONMENTAL PROTECTION AGENCY
REGION VIII
999 18th STREET - SUITE 300
DENVER, COLORADO 80202-2466

SUBJECT: GROUND WATER SECTION GUIDANCE NO. 37
Demonstrating Part II (external) Mechanical Integrity for a Class II injection well permit.

FROM: Tom Pike, Chief
UIC Direct Implementation Section

TO: All Section Staff
Montana Operations Office

During the review for a Class II injection well permit, consideration must be given to the mechanical integrity (MI) of the well. MI demonstrates that the well is in sound condition and that the well is constructed in a manner that prevents injected fluids from entering any formation other than the authorized injection formation.

A demonstration of MI is a two part process:

PART I - **INTERNAL MECHANICAL INTEGRITY** is an assurance that there are no significant leaks in the casing/tubing/packer system.

PART II - **EXTERNAL MECHANICAL INTEGRITY** demonstrates that after fluid is injected into the formation, the injected fluids will not migrate out of the authorized injection interval through vertical channels adjacent to the wellbore.

A Class II injection well may demonstrate Part II MI by showing that injected fluids remain within the authorized injection interval. This may be accomplished as follows:

1) Cement bond log showing 80% bond through the an appropriate interval (Section Guidance 34),

2) Radioactive tracer survey conducted according to a EPA-approved procedure, or

3) Temperature survey conducted according to a EPA-approved procedure (Section Guidance 38).

For each test option above, the operator of the injection well should submit a plan for conducting the test. The plan will then be approved (or modified and approved) by EPA. EPA's pre-approval of the testing method will assure the operator that the

test is conducted consistent with current EPA guidance, and that the test will provide meaningful results.

Part II MI may be demonstrated either before or after issuing the Final Permit. However, if Part II is to be demonstrated after the Final Permit is issued, a provision in the permit will require the demonstration of Part II MI. The well will also be required to pass Part II MI prior to granting authorization to inject.

Radioactive tracer surveys and temperature surveys require that the well be allowed to inject fluids as part of the procedure. In these cases, a well that has shown no other demonstration of Part II MI will be allowed to inject only that volume of fluid that is necessary to conduct the appropriate test.

After the results of the test proves that the well has passed Part II MI, the well will be given authorization to begin full injection operations.

If any of the tests show a lack of Part II MI, the well will be repaired and retested, or plugged (See Headquarters Guidance #76).

Mechanical Integrity Test
Casing or Annulus Pressure Mechanical Integrity Test

U.S. Environmental Protection Agency
Underground Injection Control Program, UIC Direct Implementation Program 8P-W-GW
999 18th Street, Suite 500 Denver, CO 80202-2466

EPA Witness: _____ Date: ____/____/____

Test conducted by: _____

Others present: _____

Well Name: _____ Type: ER SWD Status: AC TA UC

Field: _____

Location: _____ Sec: ____ T ____ N / S R ____ E / W County: _____ State: ____

Operator: _____

Last MIT: ____/____/____ Maximum Allowable Pressure: _____ PSIG

Is this a regularly scheduled test? [ ] Yes [ ] No

Initial test for permit? [ ] Yes [ ] No

Test after well rework? [ ] Yes [ ] No

Well injecting during test? [ ] Yes [ ] No If Yes, rate: _____ bpd

Pre-test casing/tubing annulus pressure: _____ psig

MIT DATA TABLE	Test #1	Test #2	Test #3
TUBING PRESSURE			
Initial Pressure	psig	psig	psig
End of test pressure	psig	psig	psig
CASING / TUBING ANNULUS PRESSURE			
0 minutes	psig	psig	psig
5 minutes	psig	psig	psig
10 minutes	psig	psig	psig
15 minutes	psig	psig	psig
20 minutes	psig	psig	psig
25 minutes	psig	psig	psig
30 minutes	psig	psig	psig
minutes	psig	psig	psig
minutes	psig	psig	psig
RESULT	[ ] Pass [ ]Fail	[ ] Pass [ ]Fail	[ ] Pass [ ]Fail

Does the annulus pressure build back up after the test ? [ ] Yes [ ] No

UNITED STATES ENVIRONMENTAL PROTECTION AGENCY
REGION VIII
999 18th STREET - SUITE 500
DENVER, COLORADO 80202-2466

SUBJECT: GROUND WATER SECTION GUIDANCE NO. 39
Pressure testing injection wells for Part I (internal) Mechanical Integrity

FROM: Tom Pike, Chief
UIC Direct Implementation Section

TO: All Section Staff
Montana Operations Office

Introduction

The Underground Injection Control (UIC) regulations require that an injection well have mechanical integrity at all times (40 CFR 144.28 (f)(2) and 40 CFR 144.51 (q)(1)). A well has mechanical integrity (40 CFR 146.8) if:

(1) There is no significant leak in the tubing, casing or packer; and

(2) There is no significant fluid movement into an underground source of drinking water (USDW) through vertical channels adjacent to the injection wellbore.

Definition: Mechanical Integrity Pressure Test for Part I. A pressure test used to determine the integrity of all the downhole components of an injection well, usually tubing,casing and packer. It is also used to test tubing cemented in the hole by using a tubing plug or retrievable packer. Pressure tests must be run at least once every five years. **If for any reason the tubing/packer is pulled, the injection well is required to pass another mechanical integrity test of the tubing casing and packer prior to recommencing injection regardless of when the last test was conducted. Tests run by operators in the absence of an EPA inspector must be conducted according to these procedures and recorded on either the attached form or an equivalent form containing the necessary information. A pressure recording chart documenting the actual annulus test pressures must be attached to the form.**

This guidance addresses making a determination of Part I of Mechanical Integrity (no leaks in the tubing, casing or packer). The Region's policy is: 1) to determine if there are significant leaks in the tubing, casing or packer; 2) to assure that the casing can withstand pressure similar to that which

would be applied if the tubing or packer fails; 3) to make the Region's test procedure consistent with the procedures utilized by other Region VIII Primacy programs; and 4) to provide a procedure which can be easily administered and is applicable to all class I and II wells. Although there are several methods allowed for determining mechanical integrity, the principal method involves running a pressure test of the tubing/casing annulus. Region VIII's procedure for running a pressure test is intended to aid UIC field inspectors who witness pressure tests for the purpose of demonstrating that a well has Part I of Mechanical Integrity. The guidance is also intended as a means of informing operators of the procedures required for conducting the test in the absence of an EPA inspector.

Pressure Test Description

Test Frequency

The mechanical integrity of an injection well must be maintained at all times. Mechanical integrity pressure tests are required at least every five (5) years. **If for any reason the tubing/packer is pulled, however, the injection well is required to pass another mechanical integrity test prior to recommencing injection regardless of when the last test was conducted. The Regional UIC program must be notified of the workover and the proposed date of the pressure test. The well's test cycle would then start from the date of the new test if the well passes the test and documentation is adequate.** Tests may be required on a more frequent basis depending on the nature of the injectate and the construction of the well (see Section guidance on MITs for wells with cemented tubing and regulations for Class I wells).

Region VIII's criteria for well testing frequency is as follows:

1. Class I hazardous waste injection wells; initially [40 CFR 146.68(d)(1)] and annually thereafter;

2. Class I non-hazardous waste injection wells; initially and every two (2) years thereafter, except for old permits (such as the disposal wells at carbon dioxide extraction plants which require a test at least every five years);

3. Class II wells with tubing, casing and packer; initially and at least every five (5) years thereafter;

4. Class II wells with tubing cemented in the hole; initially and every one (1) or two (2) years thereafter

depending on well specific conditions (See Region VIII UIC Section Guidance #36);

5. Class II wells which have been temporarily abandoned (TAd) must be pressure tested after being shut-in for two years; and

6. Class III uranium extraction wells; initially.

Test Pressure

To assure that the test pressure will detect significant leaks and that the casing is subjected to pressure similar to that which would be applied if the tubing or packer fails, the tubing/casing annulus should be **tested at a pressure equal to the maximum allowed injection pressure or 1000 psig whichever is less. The annular test pressure must, however, have a difference of at least 200 psig either greater or less than the injection tubing pressure. Wells which inject at pressures of less than 300 psig must test at a minimum pressure of 300 psig, and the pressure difference between the annulus and the injection tubing must be at least 200 psi.**

Test Criteria

1. The duration of the pressure test is 30 minutes.

2. Both the annulus and tubing pressures should be monitored and recorded every five (5) minutes.

3. If there is a pressure change of 10 percent or more from the initial test pressure during the 30 minute duration, the well has failed to demonstrate mechanical integrity and should be shut-in until it is repaired or plugged.

4. A pressure change of 10 percent or more is considered significant. If there is no significant pressure change in 30 minutes from the time that the pressure source is disconnected from the annulus, the test may be completed as passed.

Recordkeeping and Reporting

The test results must be recorded on the attached form. The annulus pressure should be recorded at five (5) minute intervals. Tests run by operators in the absence of an EPA inspector must be conducted according to these procedures and recorded on the attached form or an equivalent form and a pressure recording

chart documenting the actual annulus test pressures must be attached to the submittal. The tubing pressure at the beginning and end of each test must be recorded. The volume of the annulus fluid bled back at the surface after the test should be measured and recorded on the form. This can be done by bleeding the annulus pressure off and discharging the associated fluid into a five gallon container. The volume information can be used to verify the approximate location of the packer.

Procedures for Pressure Test

1. Scheduling the test should be done at least two (2) weeks in advance.

2. Information on the well completion (location of the packer, location of perforations, previous cement work on the casing, size of casing and tubing, etc.) and the results of the previous MIT test should be reviewed by the field inspector in advance of the test. Regional UIC Guidance #35 should also be reviewed. Information relating to the previous MIT and any well workovers should be reviewed and taken into the field for verification purposes.

3. All Class I wells and Class II SWD wells should be shut-in prior to the test. A 12 to 24-hour shut-in is preferable to assure that the temperature of the fluid in the wellbore is stable.

4. Class II enhanced recovery wells may be operating during the test, but it is recommended that the well be shut-in if possible.

5. The operator should fill the casing/tubing annulus with inhibited fluid at least 24 hours in advance, if possible. Filling the annulus should be undertaken through one valve with the second valve open to allow air to escape. After the operator has filled the annulus, a check should be made to assure that the annulus will remain full. If the annulus can not maintain a full column of fluid, the operator should notify the Director and begin a rework. The operator should measure and report the volume of fluid added to the annulus. If not already the case, the casing/tubing valves should be closed, at least, 24 hours prior to the pressure test.

Following steps are at the well:

6. Read tubing pressure and record on the form. If the

well is shut-in, the reported information on the actual maximum operating pressure should be used to determine test pressures.

7. Read pressure on the casing/tubing annulus and record value on the form. If there is pressure on the annulus, it should be bled off prior to the test. If the pressure will not bleed-off, the guidance on well failures (Region VIII UIC Section Guidance #35) should be followed.

8. Ask the operator for the date of the last workover and the volume of fluid added to the annulus prior to this test and record information on the form.

9. Hook-up well to pressure source and apply pressure until test value is reached.

10. Immediately disconnect pressure source and start test time (If there has been a significant drop in pressure during the process of disconnection, the test may have to be restarted). The pressure gages used to monitor injection tubing pressure and annulus pressure should have a pressure range which will allow the test pressure to be near the mid-range of the gage. Additionally, the gage must be of sufficient accuracy and scale to allow an accurate reading of a 10 percent change to be read. For instance, a test pressure of 600 psi should be monitored with a 0 to 1000 psi gage. The scale should be incremented in 20 psi increments.

11. Record tubing and annulus pressure values every five (5) minutes.

12. At the end of the test, record the final tubing pressure.

13. If the test fails, check the valves, bull plugs and casing head close up for possible leaks. The well should be retested.

14. If the second test indicates a well failure, the Region should be informed of the failure within 24 hours by the operator, and the well should be shut-in within 48 hours per Headquarters guidance #76. A follow-up letter should be prepared by the operator which outlines the cause of the MIT failure and proposes a potential course of action. This report should be submitted to EPA within five days.

15. Bleed off well into a bucket, if possible, to obtain a volume estimate. This should be compared to the calculated value obtained using the casing/tubing annulus volume and fluid compressibility values.

16. Return to office and prepare follow-up.

Alternative Test Option

While it is expected that the test procedure outlined above will be applicable to most wells, the potential does exist that unique circumstances may exist for a given well that precludes or makes unsafe the application of this test procedure. In the event that these **exceptional or extraordinary** conditions are encountered, the operator has the option to propose an alternative test or monitoring procedures. The request must be submitted by the operator in writing and must be approved in writing by the UIC-Implementation Section Chief or equivalent level of management.

Attachment

Mechanical Integrity Test
Casing or Annulus Pressure Mechanical Integrity Test

U.S. Environmental Protection Agency
Underground Injection Control Program, UIC Direct Implementation Program 8P-W-GW
999 18th Street, Suite 500 Denver, CO 80202-2466

EPA Witness: _____ Date: ____/____/____
Test conducted by: _____
Others present: _____

Well Name: _____ Type: ER SWD Status: AC TA UC
Field: _____
Location: _____ Sec: ____ T ____ N / S R ____ E / W County: _____ State: ____
Operator: _____
Last MIT: ____/____/____ Maximum Allowable Pressure: _____ PSIG

Is this a regularly scheduled test? [ ] Yes [ ] No
Initial test for permit? [ ] Yes [ ] No
Test after well rework? [ ] Yes [ ] No
Well injecting during test? [ ] Yes [ ] No If Yes, rate: _____ bpd

Pre-test casing/tubing annulus pressure: _____ psig

MIT DATA TABLE	Test #1	Test #2	Test #3
TUBING	*PRESSURE*		
Initial Pressure	psig	psig	psig
End of test pressure	psig	psig	psig
CASING / TUBING	*ANNULUS*	*PRESSURE*	
0 minutes	psig	psig	psig
5 minutes	psig	psig	psig
10 minutes	psig	psig	psig
15 minutes	psig	psig	psig
20 minutes	psig	psig	psig
25 minutes	psig	psig	psig
30 minutes	psig	psig	psig
minutes	psig	psig	psig
minutes	psig	psig	psig
RESULT	[ ] Pass [ ]Fail	[ ] Pass [ ]Fail	[ ] Pass [ ]Fail

Does the annulus pressure build back up after the test ? [ ] Yes [ ] No

STATEMENT OF BASIS

NEWFIELD PRODUCTION COMPANY
FEDERAL 1-31-8-18
UINTAH COUNTY, UT

EPA PERMIT NO. UT21005-06860

CONTACT: Emmett Schmitz
U. S. Environmental Protection Agency
Ground Water Program, 8P-W-GW
999 18th Street, Suite 300
Denver, Colorado 80202-2466
Telephone: 1-800-227-8917 ext. 6174

This STATEMENT OF BASIS gives the derivation of site-specific UIC Permit conditions and reasons for them. Referenced sections and conditions correspond to sections and conditions in the Permit.

UIC Permits specify the conditions and requirements for construction, operation, monitoring and reporting, and plugging of injection wells to prevent the movement of fluids into underground sources of drinking water (USDWs). Under 40 CFR 144 Subpart D, certain conditions apply to all UIC Permits and may be incorporated either expressly or by reference. General Permit conditions for which content is mandatory and not subject to site-specific differences (40 CFR Parts 144, 146 and 147) are not discussed in this document.

Upon the Effective Date when issued, the Permit authorizes the conversion and operation of a "new" injection well or wells governed by the conditions specified in the Permit. The Permit is issued for the operating life of the injection well or project unless terminated for reasonable cause under 40 CFR 144.39, 144.40 and 144.41. The Permit is subject to EPA review at least once every five (5) years to determine if action is required under 40 CFR 144.36(a).

PART I. General Information and Description of Facility

Newfield Production Company
1401 Seventeenth Street
Suite 1000
Denver, CO 80202

on

June 23, 2005

submitted an application for an Underground Injection Control (UIC) Program Permit for the following injection well or wells:

Federal 1-31-8-18
987' FNL & 685' FEL, NENE S31, T8S, R18E
Uintah County, UT

Regulations specific to Uintah-Ouray Indian Reservation injection wells are found at 40 CFR 147 Subpart TT.

The Permit application, including the required information and data necessary to issue a UIC Permit in accordance with 40 CFR Parts 144, 146 and 147, was reviewed by EPA and determined to be complete.

The Permit will expire upon delegation of primary enforcement responsibility (primacy) for applicable portions of the UIC Program to the Ute Indian Tribe or the State of Utah unless the delegated agency has the authority and chooses to adopt and enforce this Permit as a Tribal or State Permit.

TABLE 1.1 shows the status of the well or wells as "New", "Existing", or "Conversion" and for Existing shows the original date of injection operation. Well authorization "by rule" under 40 CFR Part 144 Subpart C expires automatically on the Effective Date of an issued UIC Permit.

The Federal No. 1-31-8-18 is currently an active Green River Formation oil well. The applicant intends to convert the Federal No. 1-31-8-18 to an injection well to support existing Green River Formation enhanced oil recovery operations.

TABLE 1.1

WELL STATUS / DATE OF OPERATION

CONVERSION WELLS		
Well Name	**Well Status**	**Date of Operation**
Federal 1-31-8-18	Conversion	N/A

The proposed injection well is located in the Newfield Production Company Greater Monument Butte area near the center of the broad, gently northward dipping south flank of the Uinta Basin. The beds dip at about 200'/mile, and there are no known surface folds or faults in the field. The lower 600' to 800'of the Uinta Formation, generally consisting of 5' to 20' thick brown lenticular fluvial sandstone and interbedded varicolored shales, outcrops at the surface in this area. The Uinta is underlain by the Green River Formation which consists of lake (lacustrine) margin sandstones, limestone and shale beds that were deposited along the edges and on the broad level floor of Lake Uinta as it expanded and contracted through time. Underlying the Green River Formation is the Wasatch Formation, which is approximately 2400' thick in this area and consists of red alluvial shales and siltstone with scattered lenticular sandstones usually 10' to 50' thick. Below the Wasatch Formation is the Mesaverde Formation; a series of interbedded continental deposits of shale, sandstone, and coal. Water samples from Mesaverde sands in the nearby Natural Buttes Unit yield highly saline water.

The Uinta Basin is a topographic and structural trough encompassing an area of more than 9300 square mi (14,900 km) in northeast Utah. The basin is sharply asymmetrical, with a steep north flank bounded by the east-west-trending Uinta Mountains, and a gently dipping south flank. The Uinta Basin formed in Paleocene to Eocene time, creating a large area of internal drainage which was filled by ancestral Lake Uinta. Deposition in and around Lake Uinta consisted of open- to marginal-lacustrine sediments that make up the Green River Formation. Alluvial red-bed deposits that are laterally equivalent to and intertongue with the Green River make up the Colton Formation (Wasatch). More than 450 million barrels of oil (63 MT) have been produced from the Green River and Wasatch Formations in the Uinta Basin. The southern shore of Lake Uinta was very broad and flat, which allowed large transgressive and regressive shifts in the shoreline in response to climatic and tectonic-induced rise and fall of the lake. The cyclic nature of Green River deposition in the southern shore area resulted in numerous stacked deltaic deposits. Distributary-mouth bars, distributary channels, and near-shore bars are the primary producing sandstone reservoirs in the area (Ref: "Reservoir Characterization of the Lower Green River Formation, Southwest Uinta Basin, Utah Biannual Technical Progress Report 4/1/99 - 9/30/99", by C. D. Morgan, Program Manager, November 1999, Contract DE-AC26-98BC15103). The Tertiary Duchesne River Formation alluvium generally is present at the surface in this area.

Throughout the current Newfield Production Company area of enhanced recovery injection activity, i.e., T8-9S - R15-19E, Green River Formation water analyses generally exhibit total dissolved (TDS) content well in excess of 10,000 mg/l. A few recent applications for well conversion to enhanced recovery injection contain Green River water analyses withTDS approximating 10,000 mg/l. The State of Utah-Natural Resources ascribes low TDS values to several possibilities involving dilution of Green River water with high TDS values, e,g., recharge of the Green River Formation via Green River Formation outcrop on the Book Cliffs/Roan Cliffs; injection of very low TDS Johnson Water District Reservoir source water; and percolation of surface water via deep-seated Gilsonite veins penetrating lower Green River Members.

Geologic Setting (TABLE 2.1)

TABLE 2.1
GEOLOGIC SETTING
Federal 1-31-8-18

Formation Name	Top (ft)	Base (ft)	TDS (mg/l)	Lithology
Uinta	0.00	1,843.00	< 10,000.00	Predominatly alluvial-fluvial sand and shale, with rare lacustrine carbonate/
Green River	1,843.00	6,403.00	17,278.00	Alternating intervals of fluvial-alluvial sand and shale, and lacustrine carbonate.

Proposed Injection Zone(s) (TABLE 2.2)

An injection zone is a geological formation, group of formations, or part of a formation that receives fluids through a well. The proposed injection zones are listed in TABLE 2.2.

Injection will occur into an injection zone that is separated from USDWs by the confining zone which is free of known open faults or fractures within the Area of Review.

The approved injection zone for enhanced recovery is identified as the gross interval between the top of the Garden Gulch Member at 4098 feet and the top of the Wasatch Formation, estimated to be 6403 feet.

TABLE 2.2
INJECTION ZONES
Federal 1-31-8-18

Formation Name	Top (ft)	Base (ft)	TDS (mg/l)	Fracture Gradient (psi/ft)	Porosity	Exempted?*
Green River	4,098.00	6,403.00	17,278.00	0.720		N/A

* **C - Currently Exempted**
E - Previously Exempted
P - Proposed Exemption
N/A - Not Applicable

Confining Zone(s) (TABLE 2.3)

A confining zone is a geological formation, part of a formation, or a group of formations that limits fluid movement above the injection zone. The confining zone or zones are listed in TABLE 2.3.

The Confining Zone is identified as a sixteen (16) foot interval of the Upper Green River Formation from 4082 feet to 4098 feet.

TABLE 2.3
CONFINING ZONES
Federal 1-31-8-18

Formation Name	Formation Lithology	Top (ft)	Base (ft)
Green River	Shale	4,082.00	4,098.00

Underground Sources of Drinking Water (USDWs) (TABLE 2.4)

Aquifers or the portions thereof which contain less than 10,000 mg/l total dissolved solids (TDS) and are being or could in the future be used as a source of drinking water are considered to be USDWs. The USDWs in the area of this facility are identified in TABLE 2.4.

The State of Utah "Water Wells and Springs", http//NRWRT1.STATE.UT.US, identifies no public water supply wells within the one-quarter (1/4) mile Area-of-Review (AOR) around the Federal No. 1-31-8-18.

Technical Publication No. 92: State of Utah, Department of Natural Resources, cites the base of Underground Sources of Drinking Water (USDW) in the Uinta Formation, approximately 250 feet from the surface.

TABLE 2.4
UNDERGROUND SOURCES OF DRINKING WATER (USDW)
Federal 1-31-8-18

Formation Name	Formation Lithology	Top (ft)	Base (ft)	TDS (mg/l)
Uinta	Fluvial, alluvial and lacustrine intervals of shale, sand and carbonate. The interval "surface to 250 feet" is identified as the Underground Source of Drinking Water.	0.00	1,843.00	< 10,000.00

PART III. Well Construction (40 CFR 146.22)

The Blackjack Federal No. 12-10-91-7 was drilled to a total depth of 5785 (KB) feet in the Basal Carbonate Member of the Green River Formation.

Surface casing (8-5/8 inch) was set at a depth of 309.28 feet in a 12-1/4 inch hole using 150 sacks of Class "G" cement which was circulated to the surface.

Production casing (5-1/2 inch) was set at a depth of 5768.23 feet (KB) in a 7-7/8 inch hole with 325 sacks of Premium Lite II and 425 sacks of 50/50 poz mix. This well construction is considered adequate to protect USDW's.

The EPA cal;culates the top of cement as 908 feet from the surface.

The schematic diagram shows the proposed injection perforations in the Douglas Creek Member of the Green River Formation.

Injection perforations may be placed at the operator's discretion within the approved injection zone between 3518 feet to the top of the Wasatch Formation, estimated at 5848 feet (KB). Perforations may be added at a later time provided the operator notifies the Director and submits an updated well completion report (EPA Form 7520-12) and schematic diagram.

The packer will be required to be set no higher than 100 feet above the top perforation.

TABLE 3.1
WELL CONSTRUCTION REQUIREMENTS
Federal 1-31-8-18

Casing Type	Hole Size (in)	Casing Size (in)	Cased Interval (ft)	Cemented Interval (ft)
Longstring	7.88	5.50	0.00 - 6,385.71	1,695.00 - 6,395.00
Surface	12.25	8.63	0.00 - 315.26	0.00 - 315.26

The approved well completion plan will be incorporated into the Permit as APPENDIX A and will be binding on the Permittee. Modification of the approved plan is allowed under 40 CFR 144.52(a)(1) provided written approval is obtained from the Director prior to actual modification.

Casing and Cementing (TABLE 3.1)

The construction plan for the well or wells proposed for conversion to an injection well was evaluated and determined to be in conformance with standard practices and guidelines that ensure well injection does not result in the movement of fluids into USDWs. Well construction and conversion details for the well or wells are shown in TABLE 3.1.

Tubing and Packer

Injection tubing is required to be installed from a packer up to the surface inside the well casing. The packer will be set above the uppermost perforation. The tubing and packer are designed to prevent injection fluid from coming into contact with the outermost casing.

Tubing-Casing Annulus (TCA)

The TCA allows the casing, tubing and packer to be pressure-tested periodically for mechanical integrity, and will allow for detection of leaks. The TCA will be filled with fresh water treated with a corrosion inhibitor or other fluid approved by the Director.

The tubing/casing annulus must be kept closed at all times so that it can be monitored as required under the Conditions of the Permit.

Monitoring Devices

The permittee will be required to install and maintain wellhead equipment allowing for monitoring pressures and providing access for sampling the injected fluid. This equipment includes: 1) shut-off valves located at the wellhead on the injection tubing and on the TCA; 2) a flow meter that measures the cumulative volume of injected fluid; 3) pressure gauges attached to the injection tubing and the TCA to monitor the injection and TCA pressure; and 4) a tap on the injection line, isolated by shut-off valves, for sampling the injected fluid.

All sampling and measurement taken for monitoring must be representative of the monitored activity.

PART IV. Area of Review, Corrective Action Plan (40 CFR 144.55)

TABLE 4.1
AOR AND CORRECTIVE ACTION

Well Name	Type	Status (Abandoned Y/N)	Total Depth (ft)	TOC Depth (ft)	CAP Required (Y/N)
Federal 7-31-8-18	Producer	No	6,272.00	1,760.00	No
Federal 8-31-8-18	Producer	No	6,289.00	1,622.00	No
Sundance 5-32-8-18	Producer	No	6,219.00	710.00	No
Sundance State 4-32	Producer	No	6,200.00	1,728.00	No

TABLE 4.1 lists the wells in the Area of Review ("AOR") and shows the well type, operating status, depth, top of casing cement ("TOC") and whether a Corrective Action Plan ("CAP") is required for the well.

Area Of Review

Applicants for Class I, II (other than "existing" wells) or III injection well Permits are required to identify the location of all known wells within the injection well's Area of Review (AOR) which penetrate the injection zone, or in the case of Class II wells operating over the fracture pressure of the formation, all known wells within the area of review that penetrate formations which may be affected by increased pressure. Under 40 CFR 146.6 the AOR may be a fixed radius of not less than one quarter (1/4) mile or a calculated zone of endangering influence. For Area Permits, a fixed width of not less than one quarter (1/4) mile for the circumscribing area may be used.

Corrective Action Plan

For wells in the AOR which are improperly sealed, completed, or abandoned, the applicant shall

develop a Corrective Action Plan (CAP) consisting of the steps or modifications that are necessary to prevent movement of fluid into USDWs.

The CAP will be incorporated into the Permit as APPENDIX F and become binding on the permittee.

TABLE 4.1 lists the wells in the AOR, and shows the well type, operating status, depth, top of casing cement and whether a CAP is required for this well.

PART V. Well Operation Requirements (40 CFR 146.23)

TABLE 5.1
INJECTION ZONE PRESSURES
Federal 1-31-8-18

Formation Name	Depth Used to Calculate MAIP (ft)	Fracture Gradient (psi/ft)	Initial MAIP (psi)
Green River	4,098.00	0.720	1,165

Approved Injection Fluid

The approved injection fluid is limited to fluids which meet requirements pursuant to 40 CFR § 144.6(b). For disposal wells injecting water brought to the surface in connection with natural gas storage operations, or conventional oil or natural gas production, the fluid may be commingled and the well used to inject other Class II wastes such as drilling fluids and spent well completion, treatment and stimulation fluid. Non-exempt wastes, including unused fracturing fluids or acids, gas plant cooling tower cleaning wastes, service wastes and vacuum truck wastes, are not approved.

The proposed injectate is "source water" from the Johnson Water District Reservoir. The calculated TDS of this water, as analyzed on January 10, 2005, is 674 mg/l.

Injection Pressure Limitation

Injection pressure, measured at the wellhead, shall not exceed a maximum calculated to assure that the pressure used during injection does not initiate new fractures or propagate existing fractures in the confining zones adjacent to the USDWs.

The applicant submitted injection fluid density and injection zone data which was used to calculate a formation fracture pressure and to determine the maximum allowable injection pressure (MAIP), as measured at the surface, for this Permit,

TABLE 5.1 lists the fracture gradient for the injection zone and the approved MAIP, determined according to the following formula:

$$FP = [fg - (0.433 * sg)] * d$$

FP = formation fracture pressure (measured at surface)
fg = fracture gradient (from submitted data or tests)

sg = specific gravity (of injected fluid)
d = depth to top of injection zone (or top perforation)

Injection Volume Limitation

Cumulative injected fluid volume limits are set to assure that injected fluids remain within the boundary of the exempted area. Cumulative injected fluid volume is limited when injection occurs into an aquifer that has been exempted from protection as a USDW.

There will be no restrictions on the cumulative volume of the authorized "source" water injected into the approved injection zone from 4098 feet to the top of the Wasatch Fornation, estimated at 6403 feet.

Mechanical Integrity (40 CFR 146.8)

An injection well has mechanical integrity if:

1. there is no significant leak in the casing, tubing, or packer (Part I); and
2. there is no significant fluid movement into a USDW through vertical channels adjacent to the injection well bore (Part II).

The Permit prohibits injection into a well which lacks mechanical integrity.

The Permit requires that the well demonstrate mechanical integrity prior to injection and periodically thereafter. A demonstration of mechanical integrity includes both internal (Part I) and external (Part II). The methods and frequency for demonstrating Part I and Part II mechanical integrity are dependent upon well-specific conditions as explained below.

Well construction and site-specific conditions dictate the following requirements for Mechanical Integrity (MI) demonstrations:

PART I MI: Internal MI will be demonstrated prior to beginning injection. Since this well is constructed with a standard casing, tubing, and packer configuration, a successful mechanical integrity test (MIT) is required to take place at least once every five (5) years. A demonstration of Part I MI is also required prior to resuming injection following any workover operation that affects the casing, tubing or packer. Part I MI may be demonstrated by a standard tubing-casing annulus pressure test using the maximum permitted injection pressure or 1000 psi, which ever is less, with a ten (10) percent or less pressure loss over thirty (30) minutes.

PART II MI: - The CBL indicates that cement does not meet minimum requirements needed to demonstrate zone isolation (at least 18 feet of continuous 80% bond, or better) through the confining zone. Therefore, further testing for Part II MI will be required prior to injection and at least once every five years thereafter. The demonstration shall be by temperature survey or other approved test. Approved tests for demonstrating Part II MI include a temperature survey, noise log or oxygen activation log, and Region 8 may also accept results of a radioactive tracer survey under certain circumstances.

PART VI. Monitoring, Recordkeeping and Reporting Requirements

Injection Well Monitoring Program

At least once a year the permittee must analyze a sample of the injected fluid for total dissolved solids (TDS), specific conductivity, pH, and specific gravity. This analysis shall be reported to EPA

annually as part of the Annual Report to the Director. Any time a new source of injected fluid is added, a fluid analysis shall be made of the new source.

Instantaneous injection pressure, injection flow rate, cumulative fluid volume and TCA pressures must be observed on a weekly basis. A recording, at least once every thirty (30) days, must be made of the injection pressure, injection flow rate and cumulative fluid volume, and the maximum and average value for each must be determined for each month. This information is required to be reported annually as part of the Annual Report to the Director.

PART VII. Plugging and Abandonment Requirements (40 CFR 146.10)

Plugging and Abandonment Plan

Prior to abandonment, the well or wells must be plugged with cement in a manner which will not allow the movement of fluids either into or between USDWs. The plugging and abandonment plan is described in Appendix E of the Permit.

All cement plugs will be set with tubing.

9.2 ppg plugging gel, or fresh water weighted with bentonite or treated brine will be placed between all cement plugs.

The following Plugging and Abandonment Plan, as proposed by the permittee, is predicated on the permittee not revising the injection perforations cited on the schematic diagram of well construction/conversion. Should the uppermost perforations (4466 feet to 4479 feet) be modified in construction, the EPA will modify the P&A Plan accordingly.

PLUG NO. 1: A Cast Iron Bridge Plug (CIBP) at 4371 feet with 100 feet of Class "G" cement on CIBP.

PLUG NO. 2: A 200-foot Class "G" cement plug over water zone 2000 feet to 2200 feet.

PLUG NO. 3: A Class "G" cement plug, within the 5-1/2 inch casing, from the surface to a depth of 365 feet.

PLUG NO. 4: A Class "G' cement plug on the backside of the 5-1/2 inch casing from the surface to a depth of 365 feet.

PART VIII. Financial Responsibility (40 CFR 144.52)

Demonstration of Financial Responsibility

The permittee is required to maintain financial responsibility and resources to close, plug, and abandon the underground injection operation in a manner prescribed by the Director. The permittee shall show evidence of such financial responsibility to the Director by the submission of a surety bond, or other adequate assurance such as financial statements or other materials acceptable to the Director. The Regional Administrator may, on a periodic basis, require the holder of a lifetime permit to submit a revised estimate of the resources needed to plug and abandon the well to reflect inflation of such costs, and a revised demonstration of financial responsibility if necessary. Initially, the operator has chosen to demonstrate financial responsibility with:

Financial Statement approved by the EPA.

Financial Statement, received April 22, 2005

Evidence of continuing financial responsibility is required to be submitted to the Director annually.

The permittee has submitted an estimate of $33,025 for the P&A of this 6395-foot well.

UNITED STATES ENVIRONMENTAL PROTECTION AGENCY
REGION 8
999 18th STREET - SUITE 300
DENVER, CO 80202-2466
http://www.epa.gov/region08

NOV 28 2005

Ref: 8P-W-GW

CERTIFIED MAIL
RETURN RECEIPT REQUESTED

Accepted by the
Utah Division of
Oil, Gas and Mining
FOR RECORD ONLY

RECEIVED
DEC 12 2005
DIV. OF OIL, GAS & MINING

David Gerbig
Newfield Production Company
1401 Seventeenth Street
Suite 1000
Denver, CO 80202

43-047-34494
8S 18E 31

Re: FINAL UIC Permit
EPA UIC Permit UT21005-06860
Well: Federal 1-31-8-18
Uintah County, Utah

Dear Mr. Gerbig:

Enclosed is your copy of the FINAL Underground Injection Control (UIC) Permit for the proposed Federal 1-31-8-18 injection well. A Statement of Basis, which discusses development of the conditions and requirements of the Permit, also is included.

The Public Comment period ended on NOV 16 2005. There were no comments on the Draft Permit received during the Public Notice period, and therefore the Final Permit becomes effective on the date of issuance. All conditions set forth herein refer to Title 40 Parts 124, 144, 146, and 147 of the Code of Federal Regulations (CFR) and are regulations that are in effect on the date that this Permit becomes effective.

Please note that under the terms of the Final Permit, you are authorized only to construct the proposed injection well, and must fulfill the "Prior to Commencing Injection" requirements of the Permit, Part II Section C Subpart 1 and obtain written Authorization to Inject prior to commencing injection. It is your responsibility to be familiar with and to comply with all provisions of the Final Permit.

The Permit and the authorization to inject are issued for the operating life of the well unless terminated (Part III, Section B). The EPA will review this Permit at least every five (5) years to determine whether action under 40 CFR § 144.36(a) is warranted.

Printed on Recycled Paper

If you have any questions on the enclosed Final Permit or Statement of Basis, please call Emmett Schmitz of my staff at (303) 312-6174, or toll-free at (800) 227-8917, ext. 6174.

Sincerely,

for Stephen S. Tuber
Assistant Regional Administrator
Office of Partnerships and Regulatory Assistance

enclosure:
Final UIC Permit
Statement of Basis
Form 7520-7 Application to Transfer Permit
Form 7520-11 Monitoring Report
Form 7520-14 Plugging Plan
Form 7520-12 Well Rework Record
Groundwater Section Guidance 34
Groundwater Section Guidance 35
Groundwater Section Guidance 37
Groundwater Section Guidance 39

cc:
Maxine Natchees
Acting Chairperson
Uintah & Ouray Business Committee
Ute Indian Tribe

Elaine Willie
Environmental Coordinator
Ute Indian Tribe

Chester Mills
Superintendent
Bureau of Indian Affairs
Uintah & Ouray Indian Agency

Michael Guinn
Vice President - Operations
Newfield Production Company
Myton, Utah

Printed on Recycled Paper

Gilbert Hunt
Technical Services Manager
State of Utah - Natural Resources

Matt Baker
Petroleum Engineer
Bureau of Land Management
Vernal District

Printed on Recycled Paper

EPA

UNDERGROUND INJECTION CONTROL PROGRAM

PERMIT

PREPARED: November 2005

Permit No. UT21005-06860

Class II Enhanced Oil Recovery Injection Well

Federal 1-31-8-18
Uintah County, UT

Issued To

Newfield Production Company
1401 Seventeenth Street
Suite 1000
Denver, CO 80202

Part I. AUTHORIZATION TO CONSTRUCT AND OPERATE 2

PART II. SPECIFIC PERMIT CONDITIONS 3

Section A. WELL CONSTRUCTION REQUIREMENTS 3

1. Casing and Cement. 3
2. Injection Tubing and Packer. 3
3. Sampling and Monitoring Devices. 3
4. Well Logging and Testing 4
5. Postponement of Construction or Conversion 4
6. Workovers and Alterations 4

Section B. MECHANICAL INTEGRITY 4

1. Demonstration of Mechanical Integrity (MI). 5
2. Mechanical Integrity Test Methods and Criteria 5
3. Notification Prior to Testing. 5
4. Loss of Mechanical Integrity. 5

Section C. WELL OPERATION 6

1. Requirements Prior to Commencing Injection. 6
2. Injection Interval. 6
3. Injection Pressure Limitation 6
4. Injection Volume Limitation. 7
5. Injection Fluid Limitation. 7
6. Tubing-Casing Annulus (TCA) 7

Section D. MONITORING, RECORDKEEPING, AND REPORTING OF RESULTS 7

1. Monitoring Parameters, Frequency, Records and Reports. 7
2. Monitoring Methods. 7
3. Records Retention. 8
4. Annual Reports. 8

Section E. PLUGGING AND ABANDONMENT 8

1. Notification of Well Abandonment, Conversion or Closure. 9
2. Well Plugging Requirements 9
3. Approved Plugging and Abandonment Plan. 9
4. Forty Five (45) Day Notice of Plugging and Abandonment. 9
5. Plugging and Abandonment Report. 9
6. Inactive Wells. 9

PART III. CONDITIONS APPLICABLE TO ALL PERMITS 11

Section A. EFFECT OF PERMIT 11

Section B. CHANGES TO PERMIT CONDITIONS 11

1. Modification, Reissuance, or Termination. 11
2. Conversions. 11

Section C. SEVERABILITY 12

APPENDIX A - WELL CONSTRUCTION REQUIREMENTS A-1

APPENDIX B - LOGGING AND TESTING REQUIREMENTS B-1

APPENDIX C - OPERATING REQUIREMENTS C-1

APPENDIX D - MONITORING AND REPORTING REQUIREMENTS D-1

APPENDIX E - PLUGGING AND ABANDONMENT REQUIREMENTS E-1

APPENDIX F - CORRECTIVE ACTION REQUIREMENTS F-1

Part I. AUTHORIZATION TO CONSTRUCT AND OPERATE

Under the authority of the Safe Drinking Water Act and Underground Injection Control (UIC) Program regulations of the U. S. Environmental Protection Agency (EPA) codified at Title 40 of the Code of Federal Regulations (40 CFR) Parts 2, 124, 144, 146, and 147, and according to the terms of this Permit,

Newfield Production Company 1401 Seventeenth Street Suite 1000 Denver, CO 80202

is authorized to construct and to operate the following Class II injection well or wells:

Federal 1-31-8-18 987' FNL & 685' FEL, NENE S31, T8S, R18E Uintah County, UT

Permit requirements herein are based on regulations found in 40 CFR Parts 124, 144, 146, and 147 which are in effect on the Effective Date of this Permit.

This Permit is based on representations made by the applicant and on other information contained in the Administrative Record. Misrepresentation of information or failure to fully disclose all relevant information may be cause for termination, revocation and reissuance, or modification of this Permit and/or formal enforcement action. This Permit will be reviewed periodically to determine whether action under 40 CFR 144.36(a) is required.

This Permit is issued for the life of the well or wells unless modified, revoked and reissued, or terminated under 40 CFR 144.39 or 144.40. This Permit may be adopted, modified, revoked and reissued, or terminated if primary enforcement authority for this program is delegated to an Indian Tribe or a State. Upon the effective date of delegation, all reports, notifications, questions and other compliance actions shall be directed to the Indian tribe or State Program Director or designee.

Issue Date: NOV 28 2005

Effective Date NOV 28 2005

for Stephen S. Tuber
Assistant Regional Administrator*
Office of Partnerships and Regulatory Assistance

*NOTE: The person holding this title is referred to as the "Director" throughout this Permit.

PART II. SPECIFIC PERMIT CONDITIONS

Section A. WELL CONSTRUCTION REQUIREMENTS

These requirements represent the approved minimum construction standards for well casing and cement, injection tubing, and packer.

Details of the approved well construction plan are incorporated into this Permit as APPENDIX A. Changes to the approved plan that may occur during construction must be approved by the Director prior to being physically incorporated.

1. Casing and Cement.

The well or wells shall be cased and cemented to prevent the movement of fluids into or between underground sources of drinking water. The well casing and cement shall be designed for the life expectancy of the well and of the grade and size shown in APPENDIX A. Remedial cementing may be required if shown to be inadequate by cement bond log or other attempted demonstration of Part II (External) mechanical integrity.

2. Injection Tubing and Packer.

Injection tubing is required, and shall be run and set with a packer at or below the depth indicated in APPENDIX A. The packer setting depth may be changed provided it remains below the depth indicated in APPENDIX A and the Permittee provides notice and obtains the Director's approval for the change.

3. Sampling and Monitoring Devices.

The Permittee shall install and maintain in good operating condition:

(a) a "tap" at a conveniently accessible location on the injection flow line between the pump house or storage tanks and the injection well, isolated by shut-off valves, for collection of representative samples of the injected fluid; and

(b) one-half (1/2) inch female iron pipe fitting, isolated by shut-off valves and located at the wellhead at a conveniently accessible location, for the attachment of a pressure gauge capable of monitoring pressures ranging from normal operating pressures up to the Maximum Allowable Injection Pressure specified in APPENDIX C:

  (i) on the injection tubing; and

  (ii) on the tubing-casing annulus (TCA); and

(c) a pressure actuated shut-off device attached to the injection flow line set to shut-off the injection pump when or before the Maximum Allowable Injection Pressure specified in APPENDIX C is reached at the wellhead; and

(d) a non-resettable cumulative volume recorder attached to the injection line.

4. Well Logging and Testing

Well logging and testing requirements are found in APPENDIX B. The Permittee shall ensure the log and test requirements are performed within the time frames specified in APPENDIX B. Well logs and tests shall be performed according to current EPA-approved procedures. Well log and test results shall be submitted to the Director within sixty (60) days of completion of the logging or testing activity, and shall include a report describing the methods used during logging or testing and an interpretation of the test or log results.

5. Postponement of Construction or Conversion

The Permittee shall complete well construction within one year of the Effective Date of the Permit, or in the case of an Area Permit within one year of authorization of the additional well. Authorization to construct and operate shall expire if the well has not been constructed within one year of the Effective Date of the Permit or authorization and the Permit may be terminated under 40 CFR 144.40, unless the Permittee has notified the Director and requested an extension prior to expiration. Notification shall be in writing, and shall state the reasons for the delay and provide an estimated completion date. Once Authorization has expired under this part, the complete permit process including opportunity for public comment may be required before Authorization to construct and operate can be reissued.

6. Workovers and Alterations

Workovers and alterations shall meet all conditions of the Permit. Prior to beginning any addition or physical alteration to an injection well that may significantly affect the tubing, packer or casing, the Permittee shall give advance notice to the Director and obtain the Director's approval. The Permittee shall record all changes to well construction on a Well Rework Record (EPA Form 7520-12), and shall provide this and any other record of well workover, logging, or test data to EPA within sixty (60) days of completion of the activity.

A successful demonstration of Part I MI is required following the completion of any well workover or alteration which affects the casing, tubing, or packer. Injection operations shall not be resumed until the well has successfully demonstrated mechanical integrity and the Director has provided written approval to resume injection.

Section B. MECHANICAL INTEGRITY

The Permittee is required to ensure each injection well maintains mechanical integrity at all times. The Director, by written notice, may require the Permittee to comply with a schedule describing when mechanical integrity demonstrations shall be made.

An injection well has mechanical integrity if:

(a) There is no significant leak in the casing, tubing, or packer (Part I); and

(b) There is no significant fluid movement into an underground source of drinking water throught vertical channels adjacent to the injection well bore (Part II).

1. Demonstration of Mechanical Integrity (MI).

The operator shall demonstrate MI prior to commencing injection and periodically thereafter. Well-specific conditions dictate the methods and the frequency for demonstrating MI and are discussed in the Statement of Basis. The logs and tests are designed to demonstrate both internal (Part I) and external (Part II) MI as described above. The conditions present at this well site warrant the methods and frequency required in Appendix B of this Permit.

In addition to these regularly scheduled demonstrations of MI, the operator shall demonstrate internal (Part I) MI after any workover which affects the tubing, packer or casing.

The Director may require additional or alternative tests if the results presented by the operator are not satisfactory to the Director to demonstrate there is no movement of fluid into or between USDWs resulting from injection activity. Results of MI tests shall be submitted to the Director as soon as possible but no later than sixty (60) days after the test is complete.

2. Mechanical Integrity Test Methods and Criteria

EPA-approved methods shall be used to demonstrate mechanical integrity. A current copy of Ground Water Section Guidance No. 34 "Cement Bond Logging Techniques and Interpretation", Ground Water Section Guidance No. 37, "Demonstrating Part II (External) Mechanical Integrity for a Class II injection well permit", and Ground Water Section Guidance No. 39, "Pressure Testing Injection Wells for Part I (Internal) Mechanical Integrity" are available from EPA and will be provided upon request.

The Director may stipulate specific test methods and criteria best suited for a specific well construction and injection operation.

3. Notification Prior to Testing.

The Permittee shall notify the Director at least 30 days prior to any scheduled mechanical integrity test. The Director may allow a shorter notification period if it would be sufficient to enable EPA to witness the mechanical integrity test. Notification may be in the form of a yearly or quarterly schedule of planned mechanical integrity tests, or it may be on an individual basis.

4. Loss of Mechanical Integrity.

If the well fails to demonstrate mechanical integrity during a test, or a loss of mechanical integrity becomes evident during operation (such as presence of pressure in the TCA, water flowing at the surface, etc.), the Permittee shall notify the Director within 24 hours (see Part III Section E Paragraph 11(e) of this Permit), and the well shall be shut-in within 48 hours unless the Director requires immediate shut-in.

Within five days, the Permittee shall submit a follow-up written report that documents test results, repairs undertaken or a proposed remedial action plan.

Injection operations shall not be resumed until after the well has successfully been repaired and demonstrated mechanical integrity, and the Director has provided approval to resume injection.

Section C. WELL OPERATION

INJECTION BETWEEN THE OUTERMOST CASING PROTECTING UNDERGROUND SOURCES OF DRINKING WATER AND THE WELL BORE IS PROHIBITED.

Injection is approved under the following conditions:

1. Requirements Prior to Commencing Injection.

Injection operation may commence only after all construction and pre-injection requirements herein have been met and approved. Except for new wells authorized by an Area Permit under 40 CFR 144.33 (c), the Permittee may not commence injection until construction is complete, and

(a) The Permittee has submitted to the Director a notice of completion of construction and a completed EPA Form 7520-12; all applicable logging and testing requirements of this Permit (see APPENDIX B) have been fulfilled and the records submitted to the Director; mechanical integrity pursuant to 40 CFR 146.8 and Part II Section B of this Permit has been demonstrated; and

(i) The Director has inspected or otherwise reviewed the new injection well and finds it is in compliance with the conditions of the Permit; or

(ii) The Permittee has not received notice from the Director of his or her intent to inspect or otherwise review the new injection well within 13 days of the date of the notice in Paragraph 1a, in which case prior inspection or review is waived and the Permittee may commence injection.

2. Injection Interval.

Injection is permitted only within the approved injection interval, listed in APPENDIX C. Additional individual injection perforations may be added provided that they remain within the approved injection interval and the Permittee provides notice to the Director in accordance with Part II, Section A, Paragraph 6.

3. Injection Pressure Limitation

(a) The permitted Maximum Allowable Injection Pressure (MAIP), measured at the wellhead, is found in APPENDIX C. Injection pressure shall not exceed the amount the Director determines is appropriate to ensure that injection does not initiate new fractures or propagate existing fractures in the confining zone adjacent to USDWs. In no case shall injection pressure cause the movement of injected or formation fluids into a USDW.

(b) The Permittee may request a change of the MAIP, or the MAIP may be increased or decreased by the Director in order to ensure that the requirements in Paragraph (a) above are fulfilled. The Permitee may be required to conduct a step rate injection test or other suitable test to provide information for determining the fracture pressure of the injection zone. Change of the permitted MAIP by the Director shall be by modification of this Permit and APPENDIX C.

4. Injection Volume Limitation.

Injection volume is limited to the total volume specified in APPENDIX C.

5. Injection Fluid Limitation.

Injected fluids are limited to those identified in 40 CFR 144.6(b)(2) as fluids used for enhanced recovery of oil or natural gas, including those which are brought to the surface in connection with conventional oil or natural gas production that may be commingled with waste waters from gas plants which are an integral part of production operations unless those waters are classified as a hazardous waste at the time of injection, pursuant to 40 CFR 144.6(b). Non-exempt wastes, including unused fracturing fluids or acids, gas plant cooling tower cleaning wastes, service wastes and vacuum truck wastes, are NOT approved for injection. This well is NOT approved for commercial brine injection, industrial waste fluid disposal or injection of hazardous waste as defined by CFR 40 Part 261. The Permittee shall provide a listing of the sources of injected fluids in accordance with the reporting requirements in Part II Section D Paragraph 4 and APPENDIX D of this Permit.

6. Tubing-Casing Annulus (TCA)

The tubing-casing annulus (TCA) shall be filled with water treated with a corrosion inhibitor, or other fluid approved by the Director. The TCA valve shall remain closed during normal operating conditions and the TCA pressure shall be maintained at zero (0) psi.

If TCA pressure cannot be maintained at zero (0) psi, the Permittee shall follow the procedures in Ground Water Section Guidance No. 35 "Procedures to follow when excessive annular pressure is observed on a well."

Section D. MONITORING, RECORDKEEPING, AND REPORTING OF RESULTS

1. Monitoring Parameters, Frequency, Records and Reports.

Monitoring parameters are specified in APPENDIX D. Pressure monitoring recordings shall be taken at the wellhead. The listed parameters are to be monitored, recorded and reported at the frequency indicated in APPENDIX D even during periods when the well is not operating.

Monitoring records must include:

(a) the date, time, exact place and the results of the observation, sampling, measurement, or analysis, and;

(b) the name of the individual(s) who performed the observation, sampling, measurement, or analysis, and;

(c) the analytical techniques or methods used for analysis.

2. Monitoring Methods.

(a) Monitoring observations, measurements, samples, etc. taken for the purpose of complying with these requirements shall be representative of the activity or condition being monitored.

(b) Methods used to monitor the nature of the injected fluids must comply with analytical methods cited and described in Table 1 of 40 CFR 136.3 or Appendix III of 40 CFR 261, or by other methods that have been approved in writing by the Director.

(c) Injection pressure, annulus pressure, injection rate, and cumulative injected volumes shall be observed and recorded at the wellhead under normal operating conditions, and all parameters shall be observed simultaneously to provide a clear depiction of well operation.

(d) Pressures are to be measured in pounds per square inch (psi).

(e) Fluid volumes are to be measured in standard oil field barrels (bbl).

(f) Fluid rates are to be measured in barrels per day (bbl/day).

3. Records Retention.

(a) Records of calibration and maintenance, and all original strip chart recordings for continuous monitoring instrumentation, copies of all reports required by this permit, and records of all data used to complete the application for this permit shall be retained for a period of AT LEAST THREE (3) YEARS from the date of the sample, measurement, report, or application. This period may be extended anytime prior to its expiration by request of the Director.

(b) Records of the nature and composition of all injected fluids must be retained until three (3) years after the completion of any plugging and abandonment (P&A) procedures specified under 40 CFR 144.52(a)(6) or under Part 146 Subpart G, as appropriate. The Director may require the Permittee to deliver the records to the Director at the conclusion of the retention period. The Permittee shall continue to retain the records after the three (3) year retention period unless the Permittee delivers the records to the Director or obtains written approval from the Director to discard the records.

(c) The Permittee shall retain records at the location designated in APPENDIX D.

4. Annual Reports.

Whether the well is operating or not, the Permittee shall submit an Annual Report to the Director that summarizes the results of the monitoring required by Part II Section D and APPENDIX D.

The first Annual Report shall cover the period from the effective date of the Permit through December 31 of that year. Subsequent Annual Reports shall cover the period from January 1 through December 31 of the reporting year. Annual Reports shall be submitted by February 15 of the year following data collection. EPA Form 7520-11 may be copied and shall be used to submit the Annual Report, however, the monitoring requirements specified in this Permit are mandatory even if EPA Form 7520-11 indicates otherwise.

Section E. PLUGGING AND ABANDONMENT

1. Notification of Well Abandonment, Conversion or Closure.

The Permittee shall notify the Director in writing at least forty-five (45) days prior to: 1) plugging and abandoning an injection well, 2) converting to a non-injection well, and 3) in the case of an Area Permit, before closure of the project.

2. Well Plugging Requirements

Prior to abandonment, the injection well shall be plugged with cement in a manner which prevents the movement of fluids into or between underground sources of drinking water. Prior to placement of the cement plug(s) the well shall be in a state of static equilibrium with the mud weight equalized top to bottom, either by circulating the mud in the well at least once or by a comparable method prescribed by the Director. The well shall be plugged in accordance with the approved plugging and abandonment plan and with 40 CFR 146.10.

3. Approved Plugging and Abandonment Plan.

The approved plugging and abandonment plan is incorporated into this Permit as APPENDIX E. Changes to the approved plugging and abandonment plan must be approved by the Director prior to beginning plugging operations. The Director also may require revision of the approved plugging and abandonment plan at any time prior to plugging the well.

4. Forty Five (45) Day Notice of Plugging and Abandonment.

The Permittee shall notify the Director at least forty-five (45) days prior to plugging and abandoning a well and provide notice of any anticipated change to the approved plugging and abanonment plan.

5. Plugging and Abandonment Report.

Within sixty (60) days after plugging a well, the Permittee shall submit a report (EPA Form 7520-13) to the Director. The plugging report shall be certified as accurate by the person who performed the plugging operation. Such report shall consist of either:

(a) A statement that the well was plugged in accordance with the approved plugging and abandonment plan; or

(b) Where actual plugging differed from the approved plugging and abandonment plan, an updated version of the plan, on the form supplied by the Director, specifying the differences.

6. Inactive Wells.

After any period of two years during which there is no injection the Permittee shall plug and abandon the well in accordance with Part II Section E Paragraph 2 of this Permit unless the Permittee:

(a) Provides written notice to the Director;

(b) Describes the actions or procedures the Permittee will take to ensure that the well will not endanger USDWs during the period of inactivity. These actions and procedures shall include compliance with mechanical integrity demonstration, Financial Responsibility and all other permit requirements designed to protect USDWs; and

(c) Receives written notice by the Director temporarily waiving plugging and abandonment requirements.

PART III. CONDITIONS APPLICABLE TO ALL PERMITS

Section A. EFFECT OF PERMIT

The Permittee is allowed to engage in underground injection in accordance with the conditions of this Permit. The Permittee shall not construct, operate, maintain, convert, plug, abandon, or conduct any other activity in a manner that allows the movement of fluid containing any contaminant into underground sources of drinking water, if the presence of that contaminant may cause a violation of any primary drinking water regulation under 40 CFR 142 or may otherwise adversely affect the health of persons. Any underground injection activity not authorized by this Permit or by rule is prohibited. Issuance of this Permit does not convey property rights of any sort or any exclusive privilege; nor does it authorize any injury to persons or property, any invasion of other private rights, or any infringement of State or local law or regulations. Compliance with the terms of this Permit does not constitute a defense to any enforcement action brought under the provisions of Section 1431 of the Safe Drinking Water Act (SDWA) or any other law governing protection of public health or the environment, for any imminent and substantial endangerment to human health or the environment, nor does it serve as a shield to the Permittee's independent obligation to comply with all UIC regulations. Nothing in this Permit relieves the Permittee of any duties under applicable regulations.

Section B. CHANGES TO PERMIT CONDITIONS

1. Modification, Reissuance, or Termination.

The Director may, for cause or upon a request from the Permittee, modify, revoke and reissue, or terminate this Permit in accordance with 40 CFR 124.5, 144.12, 144.39, and 144.40. Also, this Permit is subject to minor modification for causes as specified in 40 CFR 144.41. The filing of a request for modification, revocation and reissuance, termination, or the notification of planned changes or anticipated noncompliance on the part of the Permittee does not stay the applicability or enforceability of any condition of this Permit.

2. Conversions.

The Director may, for cause or upon a written request from the Permittee, allow conversion of the well from a Class II injection well to a non-Class II well. Conversion may not proceed until the Permittee receives written approval from the Director. Conditions of such conversion may include but are not limited to, approval of the proposed well rework, follow up demonstration of mechanical integrity, well-specific monitoring and reporting following the conversion, and demonstration of practical use of the converted configuration.

3. Transfer of Permit.

Under 40 CFR 144.38, this Permit is transferable provided the current Permittee notifies the Director at least thirty (30) days in advance of the proposed transfer date (EPA Form 7520-7) and provides a written agreement between the existing and new Permittees containing a specific date for transfer of Permit responsibility, coverage and liability between them. The notice shall adequately demonstrate that the financial responsibility requirements of 40 CFR 144.52(a)(7) will be met by the new Permittee. The Director may require modification or revocation and reissuance of the Permit to change the name of the Permittee and incorporate such other requirements as may be necessary under the Safe Drinking Water Act; in some cases, modification or revocation and reissuance is mandatory.

4. Permittee Change of Address.

Upon the Permittee's change of address, or whenever the operator changes the address where monitoring records are kept, the Permittee must provide written notice to the Director within 30 days.

5. Construction Changes, Workovers, Logging and Testing Data

The Permittee shall give advance notice to the Director, and shall obtain the Director's written approval prior to any physical alterations or additions to the permitted facility. Alterations or workovers shall meet all conditions as set forth in this permit. The Permittee shall record any changes to the well construction on a Well Rework Record (EPA Form 7520-12), and shall provide this and any other record of well workovers, logging , or test data to EPA within sixty (60) days of completion of the activity.

Following the completion of any well workovers or alterations which affect the casing, tubing, or packer, a successful demonstration of mechanical integrity (Part III, Section F of this permit) shall be made, and written authorization from the Director received, prior to resuming injection activities.

Section C. SEVERABILITY

The Provisions of this Permit are severable, and if any provision of this Permit or the application of any provision of this Permit to any circumstance, is held invalid, the application of such provision to other circumstances, and the remainder of this Permit shall not be affected thereby.

Section D. CONFIDENTIALITY

In accordance with 40 CFR Part 2 and 40 CFR 144.5, information submitted to EPA pursuant to this Permit may be claimed as confidential by the submitter. Any such claim must be asserted at the time of submission by stamping the words "confidential business information" on each page containing such information. If no claim is made at the time of submission, EPA may make the information available to the public without further notice. If a claim is asserted, the validity of the claim will be assessed in accordance with the procedures in 40 CFR Part 2 (Public Information). Claims of confidentiality for the following information will be denied:

- The name and address of the Permittee, and
- information which deals with the existence, absence or level of contaminants in drinking water.

Section E. GENERAL PERMIT REQUIREMENTS

1. Duty to Comply.

The Permittee must comply with all conditions of this Permit. Any noncompliance constitutes a violation of the Safe Drinking Water Act (SDWA) and is grounds for enforcement action; for Permit termination, revocation and reissuance, or modification; or for denial of a permit renewal application; except that the Permittee need not comply with the provisions of this Permit to the extent and for the duration such noncompliance is authorized in an emergency permit under 40 CFR 144.34. All violations of the SDWA may subject the Permittee to penalties and/or criminal prosecution as specified in Section 1423 of the SDWA.

2. Duty to Reapply.

If the Permittee wishes to continue an activity regulated by this Permit after the expiration date of this Permit, under 40 CFR 144.37 the Permittee must apply for a new permit prior to the expiration date.

3. Need to Halt or Reduce Activity Not a Defense.

It shall not be a defense for a Permittee in an enforcement action that it would have been necessary to halt or reduce the permitted activity in order to maintain compliance with the conditions of this Permit.

4. Duty to Mitigate.

The Permittee shall take all reasonable steps to minimize or correct any adverse impact on the environment resulting from noncompliance with this Permit.

5. Proper Operation and Maintenance.

The Permittee shall at all times properly operate and maintain all facilities and systems of treatment and control (and related appurtenances) which are installed or used by the Permittee to achieve compliance with the conditions of this Permit. Proper operation and maintenance includes effective performance, adequate funding, adequate operator staffing and training, and adequate laboratory and process controls, including appropriate quality assurance procedures. This provision requires the operation of back-up or auxiliary facilities or similar systems only when necessary to achieve compliance with the conditions of this Permit.

6. Permit Actions.

This Permit may be modified, revoked and reissued or teminated for cause. The filing of a request by the Permittee for a permit modification, revocation and reissuance, or termination, or a notification of planned changes or anticipated noncompliance, does not stay any permit condition.

7. Property Rights.

This Permit does not convey any property rights of any sort, or any exclusive privilege.

8. Duty to Provide Information.

The Permittee shall furnish to the Director, within a time specified, any information which the Director may request to determine whether cause exists for modifying, revoking and reissuing, or terminating this permit, or to determine compliance with this permit. The Permittee shall also furnish to the Director, upon request, copies of records required to be kept by this Permit. The Permittee is required to submit any information required by this Permit or by the Director to the mailing address designated in writing by the Director.

9. Inspection and Entry.

The Permittee shall allow the Director, or an authorized representative, upon the presentation of credentials and other documents as may be required by law, to:

(a) Enter upon the Permittee's premises where a regulated facility or activity is located or conducted, or where records must be kept under the conditions of this Permit;

(b) Have access to and copy, at reasonable times, any records that must be kept under the conditions of this Permit;

(c) Inspect at reasonable times any facilities, equipment (including monitoring and control equipment), practices, or operations regulated or required under this Permit; and,

(d) Sample or monitor at reasonable times, for the purpose of assuring permit compliance or as otherwise authorized by the SDWA, any substances or parameters at any location.

10. Signatory Requirements.

All applications, reports or other information submitted to the Director shall be signed and certified according to 40 CFR 144.32. This section explains the requirements for persons duly authorized to sign documents, and provides wording for required certification.

11. Reporting Requirements.

(a) Planned changes. The Permittee shall give notice to the Director as soon as possible of any planned changes, physical alterations or additions to the permitted facility, and prior to commencing such changes.

(b) Anticipated noncompliance. The Permittee shall give advance notice to the Director of any planned changes in the permitted facility or activity which may result in noncompliance with permit requirements.

(c) Monitoring Reports. Monitoring results shall be reported at the intervals specified in this Permit.

(d) Compliance schedules. Reports of compliance or noncompliance with, or any progress reports on, interim and final requirements contained in any compliance schedule of this Permit shall be submitted no later than 30 days following each schedule date.

(e) Twenty-four hour reporting. The Permittee shall report to the Director any noncompliance which may endanger human health or the environment, including:

(i) Any monitoring or other information which indicates that any contaminant may cause endangerment to a USDW; or

(ii) Any noncompliance with a permit condition or malfunction of the injection system which may cause fluid migration into or between USDWs.

Information shall be provided, either directly or by leaving a message, within twenty-four (24) hours from the time the permittee becomes aware of the circumstances by telephoning (800) 227-8917 and requesting EPA Region VIII UIC Program Compliance and Technical Enforcement Director, or by contacting the EPA Region VIII Emergency Operations Center at (303) 293-1788.

In addition, a follow up written report shall be provided to the Director within five (5) days of the time the Permittee becomes aware of the circumstances. The written submission shall contain a description of the noncompliance and its cause, the period of noncompliance including exact dates and times, and if the noncompliance has not been corrected the anticipated time it is expected to continue; and the steps taken or planned to reduce, eliminate, and prevent recurrence of the noncompliance.

(f) Oil Spill and Chemical Release Reporting: The Permittee shall comply with all reporting requirements related to the occurence of oil spills and chemical releases by contacting the National Response Center (NRC) at (800) 424-8802, (202) 267-2675, or through the NRC website http://www.nrc.uscg.mil/index.htm.

(g) Other Noncompliance. The Permittee shall report all instances of noncompliance not reported under paragraphs Part III, Section E Paragraph 11(b) or Section E, Paragraph 11(e) at the time the monitoring reports are submitted. The reports shall contain the information listed in Paragraph 11(e) of this Section.

(h) Other information. Where the Permittee becomes aware that it failed to submit any relevant facts in the permit application, or submitted incorrect information in a permit application or in any report to the Director, the Permittee shall promptly submit such facts or information to the Director.

Section F. FINANCIAL RESPONSIBILITY

1. Method of Providing Financial Responsibility.

The Permittee shall maintain continuous compliance with the requirement to maintain financial responsibility and resources to close, plug, and abandon the underground injection well(s). No substitution of a demonstration of financial responsibility shall become effective until the Permittee receives written notification from the Director that the alternative demonstration of financial responsibility is acceptable. The Director may, on a periodic basis, require the holder of a permit to revise the estimate of the resources needed to plug and abandon the well to reflect changes in such costs and may require the Permittee to provide a revised demonstration of financial responsibility.

2. Insolvency.

In the event of:

(a) the bankruptcy of the trustee or issuing institution of the financial mechanism; or

(b) suspension or revocation of the authority of the trustee institution to act as trustee; or

(c) the institution issuing the financial mechanism losing its authority to issue such an instrument

the Permittee must notify the Director in writing, within ten (10) business days, and the Permittee must establish other financial assurance or liability coverage acceptable to the Director within sixty (60) days after any event specified in (a), (b), or (c) above.

The Permittee must also notify the Director by certified mail of the commencement of voluntary or involuntary proceedings under Title 11 (Bankruptcy), U.S. Code naming the owner or operator as debtor, within ten (10) business days after the commencement of the proceeding. A guarantor, if named as debtor of a corporate guarantee, must make such a notification as required under the terms of the guarantee.

APPENDIX A

WELL CONSTRUCTION REQUIREMENTS

See diagram.

The Federal No. 1-31-8-18 was drilled to a total depth of 6395 feet in the Basal Carbonate Member of the Green River Formation.

SURFACE CASING: 8-5/8 inch set at 315.26 feet in a 12-1/4 inch hole. Secured with 150 sacks of Class "G" cement which was circulated to the surface.

BASE OF USDWs: Less than 250 feet in the Uinta Formation.

PRODUCTION CASING: 5-1/2 inch set at 6385.71 feet in a 7-7/8 inch hole. Secured with 300 sacks of Premium Lite II Mixed and 425 sacks of 50/50 Pozmix. Operator picks top of cement (TOC) at 150 feet. EPA calculates TOC at 1695 feet.

The well construction schematic diagram identifies the former production perforations in the Douglas Creek Member and the Garden Gulch Member which will be utilized during enhanced recovery injection.

New injection perforations may be placed at the permittee's discretion within the approved injection zone, i.e., 4098 feet to the top of the Wasatch Formation which is estimated to be 6403 feet. Prior to adding new injection perforations in the approved interval, the permittee shall notify the Director. Upon concluding the addition of new perforations the permitee shall submit to the Director a Well Rework Report (Form No. 7520-12) and a schematic diagram.

The packer shall be set no higher than 100 feet above the top perforation.

FEDERAL 1-31-8-18

Spud Date: 10/16/03
Put on Production: 11/25/03

GL: 5100' KB: 5112'

Initial Production: 44 BOPD, 15 MCFD, 32 BWPD

Proposed Injection Wellbore Diagram

SURFACE CASING

CSG SIZE: 8-5/8"
GRADE: J-55
WEIGHT: 24#
LENGTH: 7 jts. (305.26')
DEPTH LANDED: 315.26' KB
HOLE SIZE: 12-1/4"
CEMENT DATA: 150 sxs Class "G" cmt, est 3.5 bbls cmt to surf.

Base USDWs <250'

PRODUCTION CASING

CSG SIZE: 5-1/2" EPA Calculated TOC 1695'
GRADE: J-55
WEIGHT: 15.5#
LENGTH: 142 jts. (6387.71') Green River 1843'
DEPTH LANDED: 6385.71' KB
HOLE SIZE: 7-7/8"
CEMENT DATA: 300 sxs Prem. Lite II mixed & 425 sxs 50/50 POZ.
CEMENT TOP AT: 150' 80% Bond 4058'-4082'
Confining Zone 4082'-4098'
Gardon Gulch 4098'

TUBING

SIZE/GRADE/WT.: 2-7/8" / J-55 / 6.5# 80% Bond 4110'-4213'
NO. OF JOINTS: 190 jts (6139.11')
TUBING ANCHOR: 6151.11' KB
NO. OF JOINTS: 1 jt (32.30')
SEATING NIPPLE: 2-7/8" (1.10')
SN LANDED AT: 6186.21' KB
NO. OF JOINTS: 2 jts (64.60')
TOTAL STRING LENGTH: EOT @ 6252.36' W/12 'KB

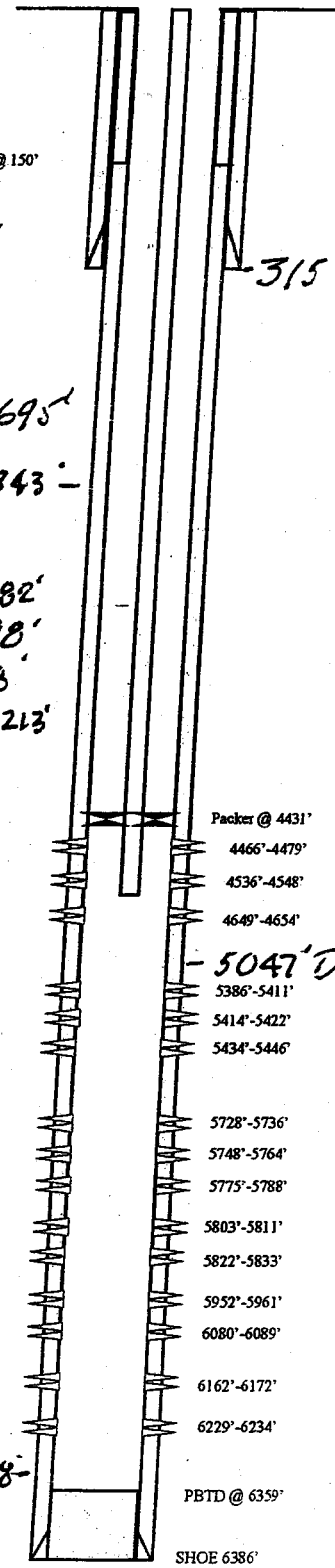

FRAC JOB

11/17/03	6162'-6234'	**Frac CP4 and 5 sands as follows:** 31,000# 20/40 sand in 344 bbls Viking I-25 fluid. Treated @ avg press of 2025 psi w/avg rate of 24.6 BPM. ISIP 2445 psi. Calc flush: 6160 gal. Actual flush: 6174 gal.
11/17/03	6080'-6089'	**Frac CP3 sands as follows:** 30,000# 20/40 sand in 338 bbls Viking I-25 fluid. Treated @ avg press of 2170 psi w/avg rate of 24.8 BPM. ISIP 1710 psi. Calc flush: 6078 gal. Actual flush: 6119 gal.
11/17/03	5952'-5961'	**Frac CP1 sands as follows:** 25,000# 20/40 sand in 307 bbls Viking I-25 fluid. Treated @ avg press of 2170 psi w/avg rate of 24.6 BPM. ISIP 2180 psi. Calc flush: 5950 gal. Actual flush: 5989 gal.
11/17/03	5728'-5833'	**Frac LODC sands as follows:** 240,000# 20/40 sand in 1563 bbls Viking I-25 fluid. Treated @ avg press of 1855 psi w/avg rate of 24.9 BPM. ISIP 2050 psi. Calc flush: 5726 gal. Actual flush: 5767 gal.
11/19/03	5386-5446'	**Frac B sands as follows:** 120,000# 20/40 sand in 844 bbls Viking I-25 fluid. Treated @ avg press of 1520 psi w/avg rate of 24.8 BPM. ISIP 1520 psi. Calc flush: 5384 gal. Actual flush: 5426 gal.
11/19/03	4649'-4654'	**Frac GB6 sands as follows:** 30,000# 20/40 sand in 302 bbls Viking I-25 fluid. Treated @ avg press of 2675 psi w/avg rate of 25 BPM. ISIP 2120 psi. Calc flush: 4647 gal. Actual flush: 4704 gal.
11/19/03	4536'-4548'	**Frac GB4 sands as follows:** 65,000# 20/40 sand in 514 bbls Viking I-25 fluid. Treated @ avg press of 2125 psi w/avg rate of 24.8 BPM. ISIP 2050 psi. Calc flush: 4534 gal. Actual flush: 4578 gal.
11/19/03	4466'-4479'	**Frac GB2 sands as follows:** 49,750# 20/40 sand in 419 bbls Viking I-25 fluid. Treated @ avg press of 2356 psi w/avg rate of 24.8 BPM. ISIP 2720 psi. Calc flush: 4464 gal. Actual flush: 4494 gal.
12/18/04		Parted rods. Update rod detail.

PERFORATION RECORD

11/14/03	6229'-6234'	4 JSPF	20 holes
11/14/03	6162'-6172'	4 JSPF	40 holes
11/17/03	6080'-6089'	4 JSPF	36 holes
11/17/03	5952'-5961'	4 JSPF	36 holes
11/17/03	5822'-5833'	2 JSPF	22 holes
11/17/03	5803'-5811'	2 JSPF	16 holes
11/17/03	5775'-5788'	2 JSPF	26 holes
11/17/03	5748'-5764'	2 JSPF	32 holes
11/17/03	5728'-5736'	2 JSPF	16 holes
11/17/03	5434'-5446'	2 JSPF	24 holes
11/17/03	5414'-5422'	2 JSPF	16 holes
11/17/03	5386'-5411'	2 JSPF	50 holes
11/19/03	4649'-4654'	4 JSPF	20 holes
11/19/03	4536'-4548'	4 JSPF	48 holes
11/19/03	4466'-4479'	4 JSPF	52 holes

NEWFIELD

Federal 1-31-8-18

987' FNL & 685' FEL

NENE Section 31-T8S-R18E

Uintah Co, Utah

API #43-047-34494; Lease #UTU-74872

MC 6/3/05

APPENDIX B

LOGGING AND TESTING REQUIREMENTS

Logs.
Logs will be conducted according to current UIC guidance. It is the responsibility of the permittee to obtain and use guidance prior to conducting any well logging required as a condition of this permit.

NO LOGGING REQUIREMENTS

Tests.
Tests will be conducted according to current UIC guidance. It is the responsibility of the permittee to obtain and use guidance prior to conducting any well test required as a condition of this permit.

WELL NAME: Federal 1-31-8-18

TYPE OF TEST	DATE DUE
Radioactive Tracer Survey (2)	Part II MIT. Within 180 days following commencement of injection, and at least once every five years thereafter
Standard Annulus Pressure	Prior to authorization to inject, and at least once every five (5) years thereafter
Pore Pressure	Prior to authorization to inject

APPENDIX C

OPERATING REQUIREMENTS

MAXIMUM ALLOWABLE INJECTION PRESSURE:

Maximum Allowable Injection Pressure (MAIP) as measured at the surface shall not exceed the pressure(s) listed below.

WELL NAME	MAXIMUM ALLOWED INJECTION PRESSURE (psi) ZONE 1 (Upper)
Federal 1-31-8-18	1,165

INJECTION INTERVAL(S):

Injection is permitted only within the approved injection interval listed below. Injection perforations may be altered provided they remain within the approved injection interval and the Permittee provides notice to the Director in accordance with Part II, Section A, Paragraph 6. Specific injection perforations can be found in Appendix A.

WELL NAME: Federal 1-31-8-18

FORMATION NAME	APPROVED INJECTION INTERVAL (KB, ft) TOP	BOTTOM	FRACTURE GRADIENT (psi/ft)
Green River	4,098.00 -	6,403.00	0.720

ANNULUS PRESSURE:

The annulus pressure shall be maintained at zero (0) psi as measured at the wellhead. If this pressure cannot be maintained, the Permittee shall follow the procedures listed under Part II, Section C. 6. of this permit.

MAXIMUM INJECTION VOLUME:

There is no limitation on the number of barrels per day (bbls/day) of water that shall be injected into this well, provided further that in no case shall injection pressure exceed that limit shown in Appendix C.

APPENDIX D

MONITORING AND REPORTING PARAMETERS

This is a listing of the parameters required to be observed, recorded, and reported. Refer to the permit Part II, Section D, for detailed requirements for observing, recording, and reporting these parameters.

OBSERVE MONTHLY AND RECORD AT LEAST ONCE EVERY THIRTY DAYS	
OBSERVE AND RECORD	Injection pressure (psig)
	Annulus pressure(s) (psig)
	Injection rate (bbl/day)
	Fluid volume injected since the well began injecting (bbls)

ANNUALLY	
ANALYZE	Injected fluid total dissolved solids (mg/l)
	Injected fluid specific gravity
	Injected fluid specific conductivity
	Injected fluid pH

ANNUALLY	
REPORT	Each month's maximum and averaged injection pressures (psig)
	Each month's maximum and averaged annulus pressure(s) (psig)
	Each month's averaged injection rate (bbl/day)
	Fluid volume injected since the well began injecting (bbl)
	Written results of annual injected fluid analysis
	Sources of all fluids injected during the year

Records of all monitoring activities must be retained and made available for inspection at the following location:

Newfield Production Company
1401 Seventeenth Street - Suite 1000
Denver, CO 80202

APPENDIX E

PLUGGING AND ABANDONMENT REQUIREMENTS

See diagram.

All cement plugs will be set wirh tubing.

9.2 ppg plugging gel, or fresh water weighted with bentonite or treated brine will be placed between all cement plugs.

Based upon the proposed enhanced recovery inejction perforations, the permittee has submitted the following Plugging and Abandonment Plan.

PLUG NO. 1: Set a Cast Iron Bridge Plug (CIBP) at 4371 feet. Place 100 feet of Class "G" cement on CIBP.

PLUG NO. 2: Set a 200-foot balanced cement plug between 2000 feet and 2200 feet across water zone.

PLUG NO. 3: Place a cement plug inside of the 5-1/2 inch casing from the surface to a depth of 365 feet.

PLUG NO. 4: Set cement plug from the surface to a depth of 365 feet on the backside of the 5-1/2 inch casing.

Hachment Q-2

FEDERAL 1-31-8-18

Spud Date: 10/16/03
Put on Production: 11/25/03

GL: 5100' KB: 5112'

Initial Production: 44 BOPD, 15 MCFD, 32 BWPD

Proposed P & A
Wellbore Diagram

SURFACE CASING

CSG SIZE: 8-5/8"
GRADE: J-55
WEIGHT: 24#
LENGTH: 7 jts. (305.26')
DEPTH LANDED: 315.26' KB
HOLE SIZE:12-1/4"
CEMENT DATA: 150 sxs Class "G" cmt, est 3.5 bbls cmt to surf.

PRODUCTION CASING

CSG SIZE: 5-1/2"
GRADE: J-55
WEIGHT: 15.5#
LENGTH: 142 jts. (6387.71')
DEPTH LANDED: 6385.71' KB
HOLE SIZE: 7-7/8"
CEMENT DATA: 300 sxs Prem. Lite II mixed & 425 sxs 50/50 POZ.
CEMENT TOP AT: 150'

80% Cement Bond 4058-4082'
Confining Zone 4082-4098'
Garden Gulch Mem. 4098'

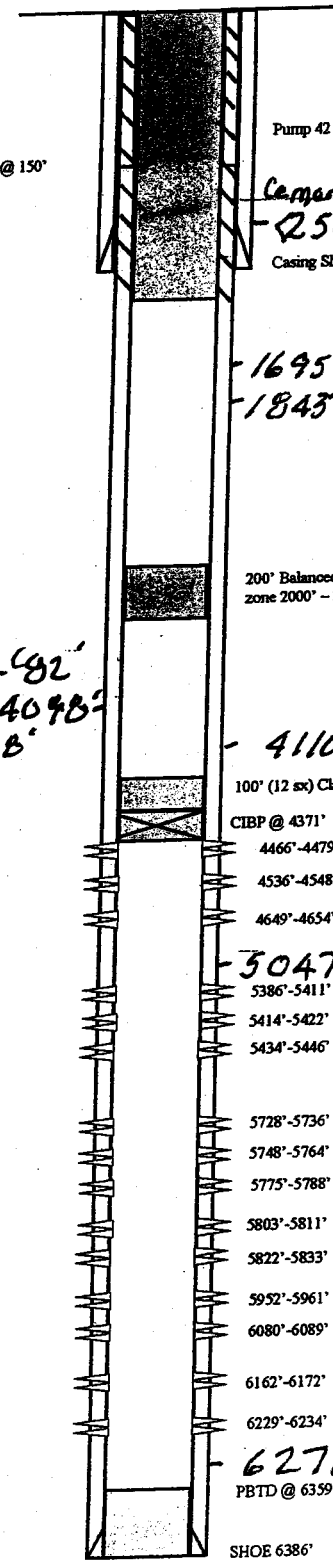

NEWFIELD

Federal 1-31-8-18

987' FNL & 685' FEL

NENE Section 31-T8S-R18E

Uintah Co, Utah

API #43-047-34494; Lease #UTU-74872

MC 6/3/05

APPENDIX F

CORRECTIVE ACTION REQUIREMENTS

No corrective action is deemed necessary for this project.

FORM 3160-5
(September 2001)

UNITED STATES
DEPARTMENT OF THE INTERIOR
BUREAU OF LAND MANAGEMENT

FORM APPROVED
OMB No. 1004-0135
Expires January 31, 2004

SUNDRY NOTICES AND REPORTS ON WELLS

Do not use this form for proposals to drill or to re-enter an abandoned well. Use Form 3160-3 (APD) for such proposals.

SUBMIT IN TRIPLICATE - Other Instructions on reverse side

5. Lease Serial No.
UTU74872

6. If Indian, Allottee or Tribe Name.

7. If Unit or CA/Agreement, Name and/or No.
SUNDANCE UNIT

1. Type of Well
☒ Oil Well ☐ Gas Well ☐ Other

8. Well Name and No.
FEDERAL 1-31-8-18

2. Name of Operator
NEWFIELD PRODUCTION COMPANY

9. API Well No.
4304734494

3a. Address Route 3 Box 3630
Myton, UT 84052

3b. Phone No. *(include are code)*
435.646.3721

10. Field and Pool, or Exploratory Area
Monument Butte

4. Location of Well *(Footage, Sec., T., R., M., or Survey Description)*
987 FNL 685 FEL
NE/NE Section 31 T8S R18E

11. County or Parish, State
Uintah,UT

12. CHECK APPROPRIATE BOX(ES) TO INIDICATE NATURE OF NOTICE, OR OTHER DATA

TYPE OF SUBMISSION	TYPE OF ACTION			
☐ Notice of Intent	☐ Acidize	☐ Deepen	☐ Production(Start/Resume)	☐ Water Shut-Off
☒ Subsequent Report	☐ Alter Casing	☐ Fracture Treat	☐ Reclamation	☐ Well Integrity
☐ Final Abandonment Notice	☐ Casing Repair	☐ New Construction	☐ Recomplete	☒ Other Change Status, Put Well on Injection
	☐ Change Plans	☐ Plug & Abandon	☐ Temporarily Abandon	
	☒ Convert to Injector	☐ Plug Back	☐ Water Disposal	

13. Describe Proposed or Completed Operation (clearly state all pertinent details, including estimated starting date of any proposed work and approximate duration thereof. If the proposal is to deepen directionally or recomplete horizontally, give subsurface locations and measured and true vertical depths of all pertinent markers and zones. Attach the Bond under which the work will be performed or provide the Bond No. on file with BLM/BIA. Required subsequent reports shall be filed within 30 days following completion of the involved operations. If the operation results in a multiple completion or recompletion in a new interval, a Form 3160-4 shall be filed once testing has been completed. Final Abandonment Notices shall be filed only after all requirements, including reclamation, have been completed, and the operator has determined that the site is ready for final inspection.)

The above referenced well was put on injection at 9:30 a.m. on 2/22/06.

Accepted by the Utah Division of Oil, Gas and Mining
FOR RECORD ONLY

I hereby certify that the foregoing is true and correct
Name *(Printed/Typed)*
Mandie Crozier

Title
Regulatory Specialist

Signature
Mandie Crozier

Date
02/24/2006

THIS SPACE FOR FEDERAL OR STATE OFFICE USE

Approved by

Title

Date

Conditions of approval, if any, are attached. Approval of this notice does not warrant or certify that the applicant holds legal or equitable title to those rights in the subject lease which would entitle the applicant to conduct operations thereon.

Office

Title 18 U.S.C. Section 1001 and Title 43 U.S.C. Section 1212, make it a crime for any person knowingly and willfully to make to any department or agency of the United States any false, fictitious and fraudulent statements or representations as to any matter within its jurisdiction

(Instructions on reverse)

FEB 2 7 2006

STATE OF UTAH
DEPARTMENT OF NATURAL RESOURCES
DIVISION OF OIL, GAS AND MINING

5. LEASE DESIGNATION AND SERIAL NUMBER: BUREAU OF LAND MANAGEMENT

SUNDRY NOTICES AND REPORTS ON WELLS

6. IF INDIAN, ALLOTTEE OR TRIBE NAME:

Do not use this form for proposals to drill new wells, significantly deepen existing wells below current bottom-hole depth, reenter plugged wells, or to drill horizontal laterals. Use APPLICATION FOR PERMIT TO DRILL form for such proposals.

7. UNIT or CA AGREEMENT NAME: SUNDANCE UNIT

1. TYPE OF WELL: OIL WELL [x] GAS WELL [ ] OTHER

8. WELL NAME and NUMBER: FEDERAL 1-31-8-18

2. NAME OF OPERATOR: NEWFIELD PRODUCTION COMPANY

9. API NUMBER: 4304734494

3. ADDRESS OF OPERATOR: Route 3 Box 3630 CITY Myton STATE UT ZIP 84052 PHONE NUMBER 435.646.3721

10. FIELD AND POOL, OR WILDCAT: MONUMENT BUTTE

4. LOCATION OF WELL:

FOOTAGES AT SURFACE: 987 FNL 685 FEL COUNTY: UINTAH

OTR/OTR. SECTION. TOWNSHIP. RANGE. MERIDIAN: NENE, 31, T8S, R18E STATE: UT

11. CHECK APPROPRIATE BOXES TO INDICATE NATURE OF NOTICE, REPORT, OR OTHER DATA

TYPE OF SUBMISSION	TYPE OF ACTION		
[ ] NOTICE OF INTENT (Submit in Duplicate)	[ ] ACIDIZE	[ ] DEEPEN	[ ] REPERFORATE CURRENT FORMATION
Approximate date work will	[ ] ALTER CASING	[ ] FRACTURE TREAT	[ ] SIDETRACK TO REPAIR WELL
	[ ] CASING REPAIR	[ ] NEW CONSTRUCTION	[ ] TEMPORARILY ABANDON
	[ ] CHANGE TO PREVIOUS PLANS	[ ] OPERATOR CHANGE	[ ] TUBING REPAIR
	[ ] CHANGE TUBING	[ ] PLUG AND ABANDON	[ ] VENT OR FLAIR
[x] SUBSEQUENT REPORT (Submit Original Form Only)	[ ] CHANGE WELL NAME	[ ] PLUG BACK	[ ] WATER DISPOSAL
Date of Work Completion:	[ ] CHANGE WELL STATUS	[ ] PRODUCTION (START/STOP)	[ ] WATER SHUT-OFF
	[ ] COMMINGLE PRODUCING FORMATIONS	[ ] RECLAMATION OF WELL SITE	[x] OTHER: - Step Rate Test
07/10/2006	[ ] CONVERT WELL TYPE	[ ] RECOMPLETE - DIFFERENT FORMATION	

12. DESCRIBE PROPOSED OR COMPLETED OPERATIONS. Clearly show all pertinent details including dates, depths, volumes, etc.

A step rate test was conducted on the subject well on June 28, 2006. Results from the test indicate that the fracture gradient is .722 psi/ft. Therefore, Newfield is requesting that the maximum allowable injection pressure (MAIP) be changed to 1280 psi.

Accepted by the Utah Division of Oil, Gas and Mining FOR RECORD ONLY

NAME (PLEASE PRINT) Cheyenne Bateman TITLE Well Analyst Foreman

SIGNATURE DATE 07/10/2006

(This space for State use only)

RECEIVED JUL 12 2006 DIV. OF OIL, GAS & MINING

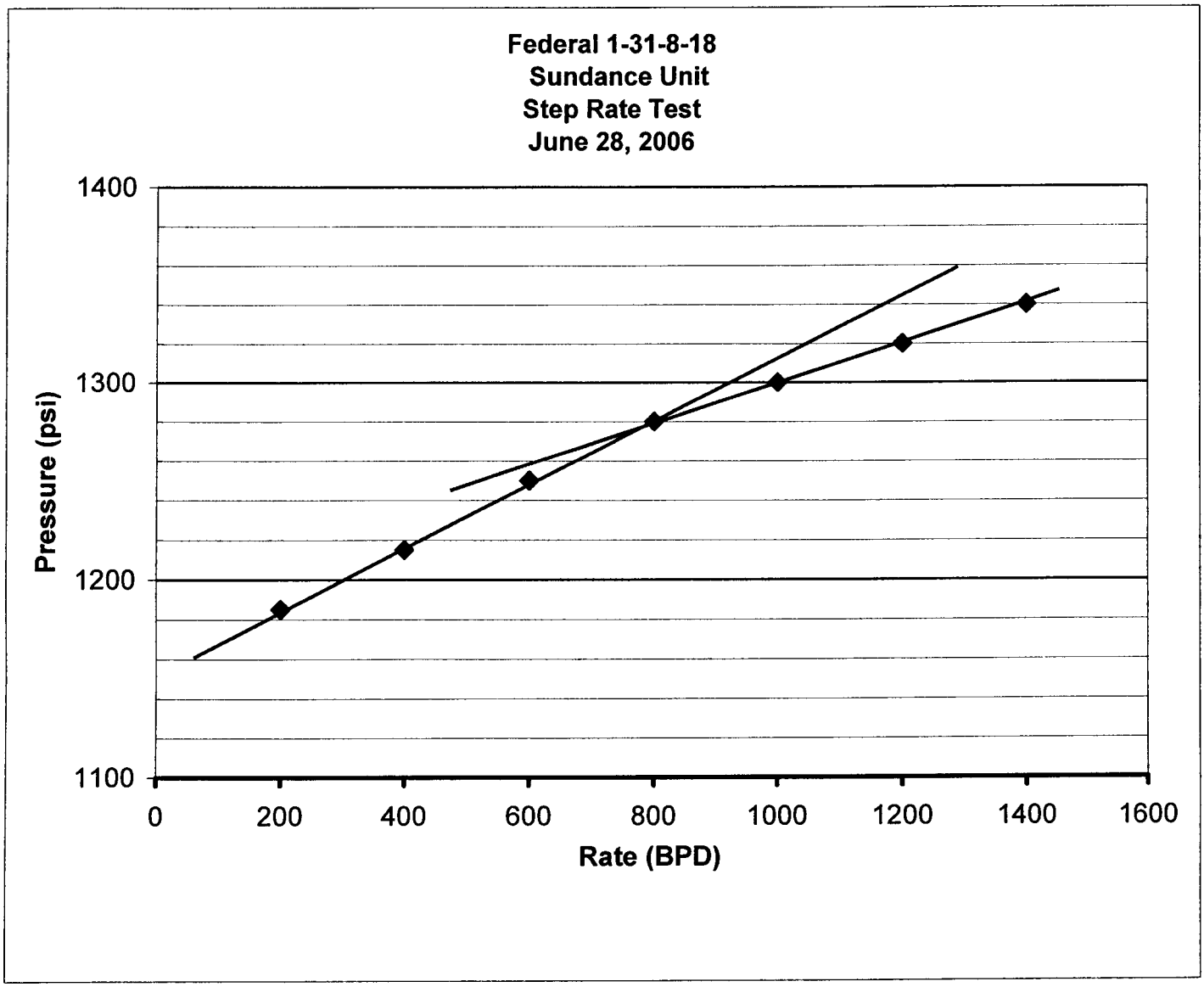

Start Pressure:	1170	psi
Instantaneous Shut In Pressure (ISIP):	1315	psi
Top Perforation:	4466	feet
Fracture pressure (Pfp):	1280	psi
FG:	0.722	psi/ft

Step	Rate(bpd)	Pressure(psi)
1	200	1185
2	400	1215
3	600	1250
4	800	1280
5	1000	1300
6	1200	1320
7	1400	1340

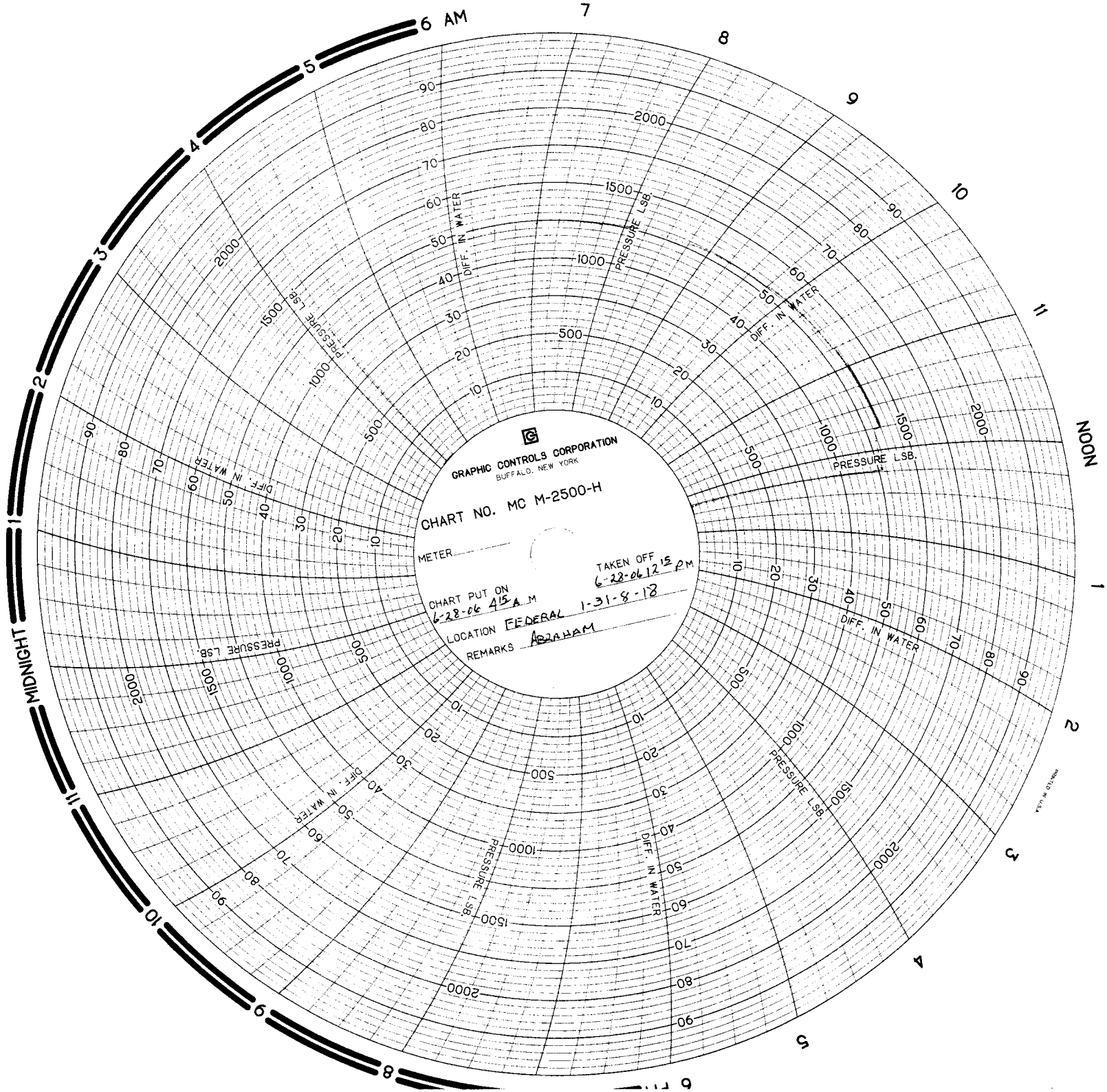
GRAPHIC CONTROLS CORPORATION
BUFFALO, NEW YORK
CHART NO. MC M-2500-H
METER
TAKEN OFF 6-28-06 12:15 PM
CHART PUT ON 6-28-06 4:15 A M
LOCATION FEDERAL 1-31-8-18
REMARKS ABRAHAM
DIFF. IN WATER
PRESSURE LSB.
MIDNIGHT
NOON
6 AM
PRINTED IN U.S.A.

STATE OF UTAH
DEPARTMENT OF NATURAL RESOURCES
DIVISION OF OIL, GAS AND MINING

SUNDRY NOTICES AND REPORTS ON WELLS

Do not use this form for proposals to drill new wells, significantly deepen existing wells below current bottom-hole depth, reenter plugged wells, or to drill horizontal laterals. Use APPLICATION FOR PERMIT TO DRILL form for such proposals.

5. LEASE DESIGNATION AND SERIAL NUMBER: USA UTU-74872
6. IF INDIAN, ALLOTTEE OR TRIBE NAME:
7. UNIT or CA AGREEMENT NAME: GMBU
8. WELL NAME and NUMBER: FEDERAL 1-31-8-18
9. API NUMBER: 4304734494
10. FIELD AND POOL, OR WILDCAT: GREATER MB UNIT

1. TYPE OF WELL: OIL WELL [X] GAS WELL [ ] OTHER
2. NAME OF OPERATOR: NEWFIELD PRODUCTION COMPANY
3. ADDRESS OF OPERATOR: Route 3 Box 3630 CITY Myton STATE UT ZIP 84052 PHONE NUMBER 435.646.3721
4. LOCATION OF WELL:
FOOTAGES AT SURFACE: 987 FNL 685 FEL COUNTY: UINTAH
OTR/OTR. SECTION. TOWNSHIP. RANGE. MERIDIAN: NENE, 31, T8S, R18E STATE: UT

11. CHECK APPROPRIATE BOXES TO INDICATE NATURE OF NOTICE, REPORT, OR OTHER DATA

TYPE OF SUBMISSION	TYPE OF ACTION		
[ ] NOTICE OF INTENT (Submit in Duplicate)	[ ] ACIDIZE	[ ] DEEPEN	[ ] REPERFORATE CURRENT FORMATION
Approximate date work will	[ ] ALTER CASING	[ ] FRACTURE TREAT	[ ] SIDETRACK TO REPAIR WELL
	[ ] CASING REPAIR	[ ] NEW CONSTRUCTION	[ ] TEMPORARITLY ABANDON
	[ ] CHANGE TO PREVIOUS PLANS	[ ] OPERATOR CHANGE	[ ] TUBING REPAIR
	[ ] CHANGE TUBING	[ ] PLUG AND ABANDON	[ ] VENT OR FLAIR
[X] SUBSEQUENT REPORT (Submit Original Form Only)	[ ] CHANGE WELL NAME	[ ] PLUG BACK	[ ] WATER DISPOSAL
Date of Work Completion:	[ ] CHANGE WELL STATUS	[ ] PRODUCTION (START/STOP)	[ ] WATER SHUT-OFF
12/16/2010	[ ] COMMINGLE PRODUCING FORMATIONS	[ ] RECLAMATION OF WELL SITE	[X] OTHER: - Five Year MIT
	[ ] CONVERT WELL TYPE	[ ] RECOMPLETE - DIFFERENT FORMATION	

12. DESCRIBE PROPOSED OR COMPLETED OPERATIONS. Clearly show all pertinent details including dates, depths, volumes, etc.

On 11/19/2010 Nathan Wiser with the EPA was contacted concerning the 5 year MIT on the above listed well. On 12/16/2010 the casing was pressured up to 1480 psig and charted for 30 minutes with no pressure loss. The well was injecting during the test. The tubing pressure was 1216 psig during the test. There was not an EPA representative available to witness the test.

EPA# UT21005-06860 API# 43-047-34494

Accepted by the Utah Division of Oil, Gas and Mining

FOR RECORD ONLY

NAME (PLEASE PRINT) Lucy Chavez-Naupoto TITLE Administrative Assistant

SIGNATURE Lucy Chavez-Naupoto DATE 12/20/2010

(This space for State use only)

RECEIVED
DEC 23 2010
DIV. OF OIL, GAS & MINING

Mechanical Integrity Test
Casing or Annulus Pressure Mechanical Integrity Test

U.S. Environmental Protection Agency
Underground Injection Control Program
999 18th Street, Suite 500 Denver, CO 80202-2466

RECEIVED
DEC 23 2010
DIV. OF OIL, GAS & MINING

EPA Witness: _____ Date: 12 / 16 / 10
Test conducted by: Austin Harrison
Others present: _____

Well Name: Fogram 1-31-8-18 Type: ER SWD Status: AC TA UC
Field: Monument Butte
Location: 1 Sec: 31 T 8 N (S) R 18 (E) W County: Uintah State: UT
Operator: Newfield Production Co.
Last MIT: / / Maximum Allowable Pressure: 1280 PSIG

Is this a regularly scheduled test? [X] Yes [ ] No
Initial test for permit? [ ] Yes [X] No
Test after well rework? [ ] Yes [X] No
Well injecting during test? [X] Yes [ ] No If Yes, rate: 18 bpd

Pre-test (casing)/tubing annulus pressure: 0 psig

MIT DATA TABLE	Test #1	Test #2	Test #3
TUBING	*PRESSURE*		
Initial Pressure	1216 psig	psig	psig
End of test pressure	1215 psig	psig	psig
CASING / TUBING	*ANNULUS*	*PRESSURE*	
0 minutes	1480 psig	psig	psig
5 minutes	1480 psig	psig	psig
10 minutes	1480 psig	psig	psig
15 minutes	1480 psig	psig	psig
20 minutes	1480 psig	psig	psig
25 minutes	1480 psig	psig	psig
30 minutes	1480 psig	psig	psig
_____ minutes	psig	psig	psig
_____ minutes	psig	psig	psig
RESULT	[X] Pass [ ] Fail	[ ] Pass [ ] Fail	[ ] Pass [ ] Fail

Does the annulus pressure build back up after the test ? [ ] Yes [X] No

MECHANICAL INTEGRITY PRESSURE TEST

Additional comments for mechanical integrity pressure test, such as volume of fluid added to annulus and bled back at end of test, reason for failing test (casing head leak, tubing leak, other), etc.:

Signature of Witness: _____

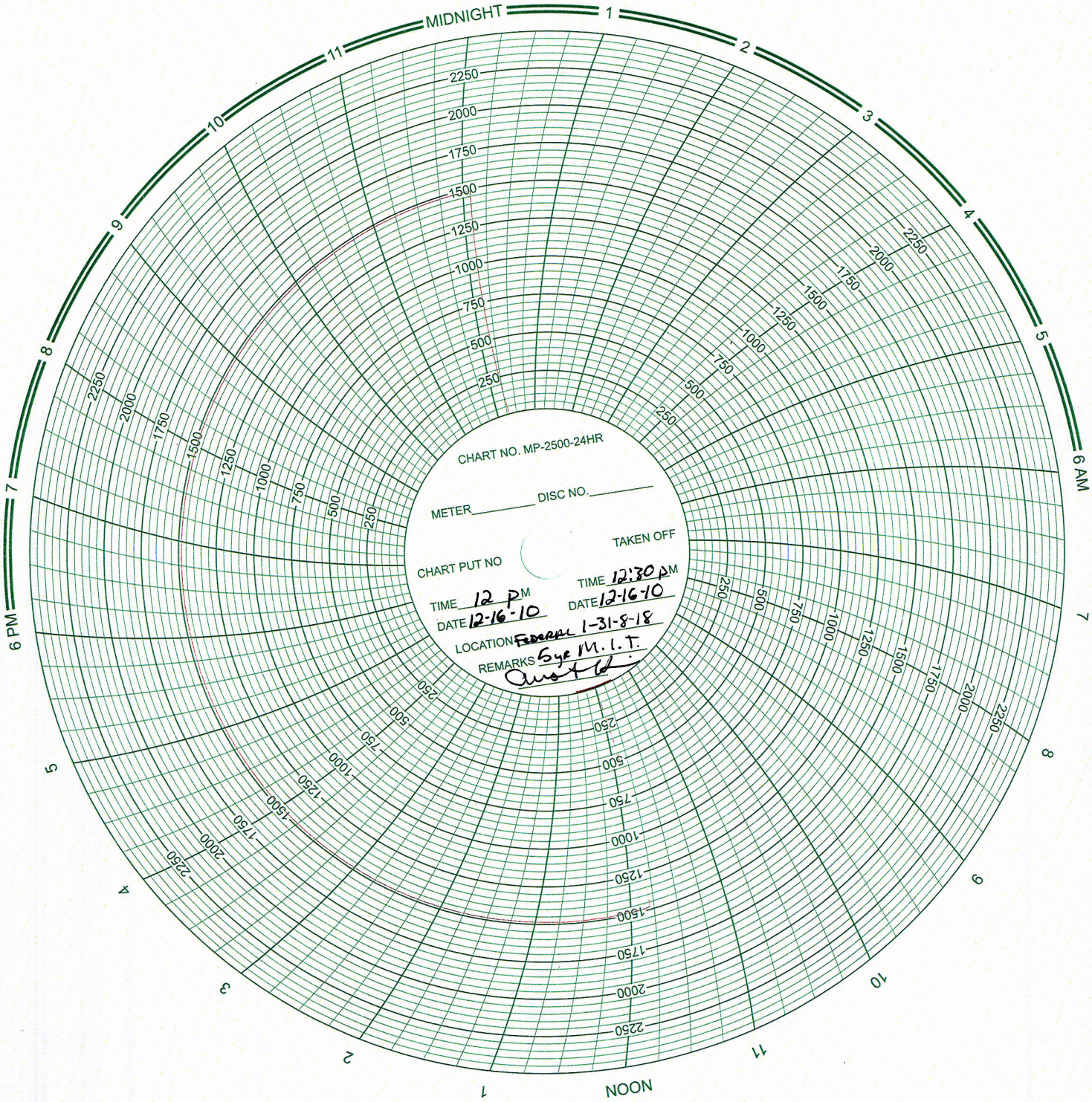

RECEIVED
DEC 23 2010
DIV. OF OIL, GAS & MINING

STATE OF UTAH
DEPARTMENT OF NATURAL RESOURCES
DIVISION OF OIL, GAS, AND MINING

FORM 9

5.LEASE DESIGNATION AND SERIAL NUMBER: UTU-74872

SUNDRY NOTICES AND REPORTS ON WELLS

Do not use this form for proposals to drill new wells, significantly deepen existing wells below current bottom-hole depth, reenter plugged wells, or to drill horizontal laterals. Use APPLICATION FOR PERMIT TO DRILL form for such proposals.

6. IF INDIAN, ALLOTTEE OR TRIBE NAME:

7.UNIT or CA AGREEMENT NAME: GMBU (GRRV)

1. TYPE OF WELL Water Injection Well

8. WELL NAME and NUMBER: FEDERAL 1-31-8-18

2. NAME OF OPERATOR: NEWFIELD PRODUCTION COMPANY

9. API NUMBER: 43047344940000

3. ADDRESS OF OPERATOR: Rt 3 Box 3630 , Myton, UT, 84052

PHONE NUMBER: 435 646-4825 Ext

9. FIELD and POOL or WILDCAT: 8 MILE FLAT NORTH

4. LOCATION OF WELL
FOOTAGES AT SURFACE: 0987 FNL 0685 FEL
QTR/QTR, SECTION, TOWNSHIP, RANGE, MERIDIAN: Qtr/Qtr: NENE Section: 31 Township: 08.0S Range: 18.0E Meridian: S

COUNTY: UINTAH

STATE: UTAH

11. CHECK APPROPRIATE BOXES TO INDICATE NATURE OF NOTICE, REPORT, OR OTHER DATA

TYPE OF SUBMISSION

- ☐ NOTICE OF INTENT — Approximate date work will start:
- ✓ SUBSEQUENT REPORT — Date of Work Completion: 11/16/2015
- ☐ SPUD REPORT — Date of Spud:
- ☐ DRILLING REPORT — Report Date:

TYPE OF ACTION

☐ ACIDIZE	☐ ALTER CASING	☐ CASING REPAIR
☐ CHANGE TO PREVIOUS PLANS	☐ CHANGE TUBING	☐ CHANGE WELL NAME
☐ CHANGE WELL STATUS	☐ COMMINGLE PRODUCING FORMATIONS	☐ CONVERT WELL TYPE
☐ DEEPEN	☐ FRACTURE TREAT	☐ NEW CONSTRUCTION
☐ OPERATOR CHANGE	☐ PLUG AND ABANDON	☐ PLUG BACK
☐ PRODUCTION START OR RESUME	☐ RECLAMATION OF WELL SITE	☐ RECOMPLETE DIFFERENT FORMATION
☐ REPERFORATE CURRENT FORMATION	☐ SIDETRACK TO REPAIR WELL	☐ TEMPORARY ABANDON
☐ TUBING REPAIR	☐ VENT OR FLARE	☐ WATER DISPOSAL
☐ WATER SHUTOFF	☐ SI TA STATUS EXTENSION	☐ APD EXTENSION
☐ WILDCAT WELL DETERMINATION	✓ OTHER	OTHER: 5 YR MIT

12. DESCRIBE PROPOSED OR COMPLETED OPERATIONS. Clearly show all pertinent details including dates, depths, volumes, etc.

5 YR MIT performed on the above listed well. On 11/16/2015 the casing was pressured up to 1450 psig and charted for 30 minutes with no pressure loss. The well was injecting during the test. The tbg pressure was 1227 psig during the test. There was not an EPA representative available to witness the test. EPA #UT22197-06860

Accepted by the Utah Division of Oil, Gas and Mining
FOR RECORD ONLY
November 19, 2015

NAME (PLEASE PRINT)	PHONE NUMBER	TITLE
Lucy Chavez-Naupoto	435 646-4874	Water Services Technician

SIGNATURE	DATE
N/A	11/17/2015

RECEIVED: Nov. 17, 2015

Mechanical Integrity Test
Casing or Annulus Pressure Mechanical Integrity Test

U.S. Environmental Protection Agency
Underground Injection Control Program
999 18th Street, Suite 500 Denver, CO 80202-2466

EPA Witness: _____ Date: 11 / 16 / 2015
Test conducted by: Troy Lazenby
Others present: _____

Well Name: Federal 1-31-8-18 Type: ER SWD Status: AC TA UC
Field: Monument Butte
Location: NE/NE Sec: 31 T 8 N/(S) R 18 (E)/W County: Uintah State: UT
Operator: Troy Lazenby
Last MIT: / / Maximum Allowable Pressure: _____ PSIG

Is this a regularly scheduled test? [✓] Yes [ ] No
Initial test for permit? [ ] Yes [✓] No
Test after well rework? [ ] Yes [✓] No
Well injecting during test? [✓] Yes [ ] No If Yes, rate: 11 bpd

Pre-test casing/tubing annulus pressure: 0/1227 psig

MIT DATA TABLE	Test #1	Test #2	Test #3
TUBING	*PRESSURE*		
Initial Pressure	1227 psig	psig	psig
End of test pressure	1227 psig	psig	psig
CASING / TUBING	*ANNULUS*	*PRESSURE*	
0 minutes	1451 psig	psig	psig
5 minutes	1451 psig	psig	psig
10 minutes	1451 psig	psig	psig
15 minutes	1451 psig	psig	psig
20 minutes	1451 psig	psig	psig
25 minutes	1450 psig	psig	psig
30 minutes	1450 psig	psig	psig
_____ minutes	psig	psig	psig
_____ minutes	psig	psig	psig
RESULT	[✓] Pass [ ]Fail	[ ] Pass [ ]Fail	[ ] Pass [ ]Fail

Does the annulus pressure build back up after the test ? [ ] Yes [✓] No

MECHANICAL INTEGRITY PRESSURE TEST

Additional comments for mechanical integrity pressure test, such as volume of fluid added to annulus and bled back at end of test, reason for failing test (casing head leak, tubing leak, other), etc.:

_____

Signature of Witness: _____

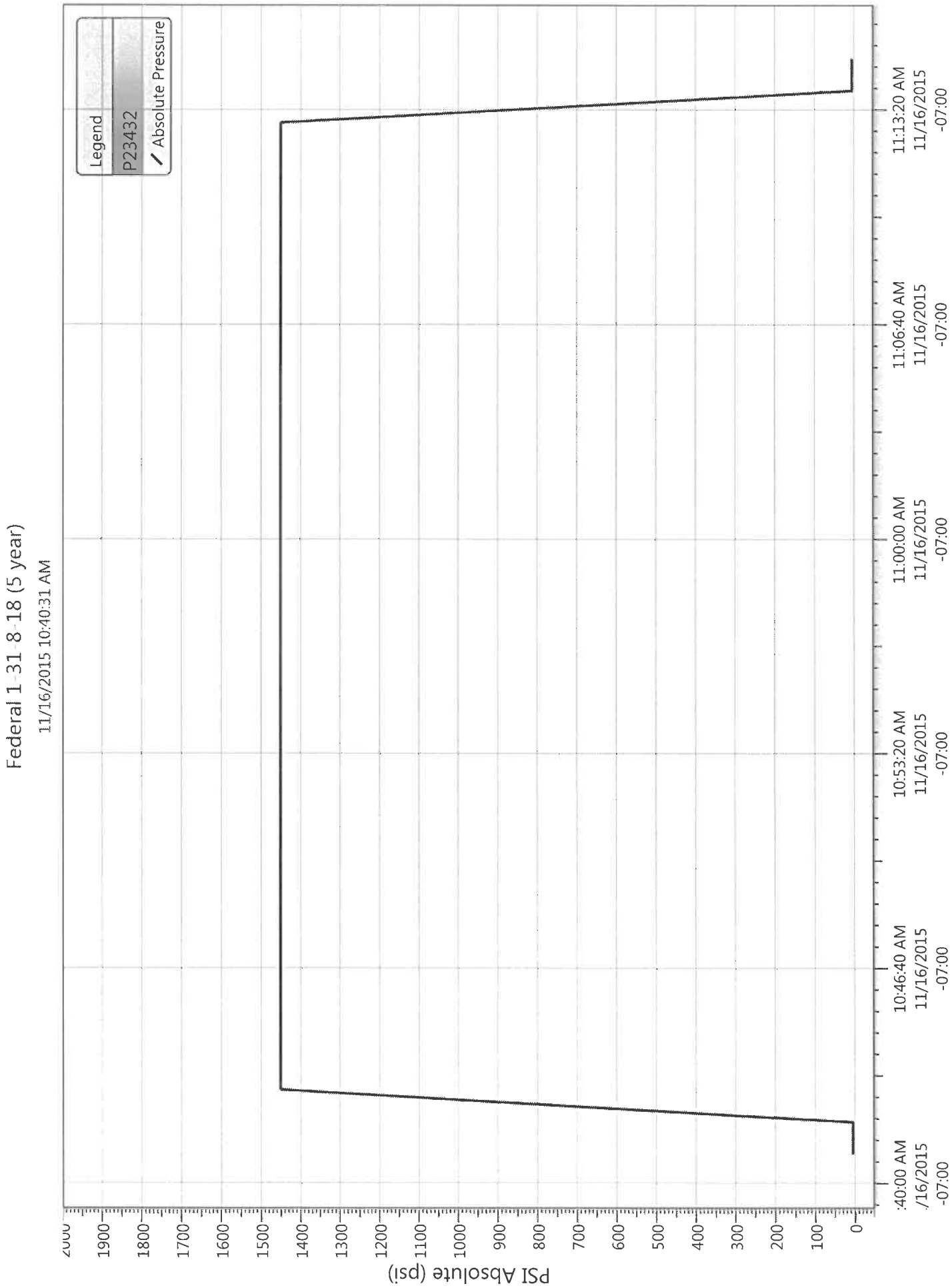
Federal 1-31-8-18 (5 year)
11/16/2015 10:40:31 AM
Legend
P23432
Absolute Pressure
PSI Absolute (psi)
2000
1900
1800
1700
1600
1500
1400
1300
1200
1100
1000
900
800
700
600
500
400
300
200
100
0
:40:00 AM
/16/2015
-07:00
10:46:40 AM
11/16/2015
-07:00
10:53:20 AM
11/16/2015
-07:00
11:00:00 AM
11/16/2015
-07:00
11:06:40 AM
11/16/2015
-07:00
11:13:20 AM
11/16/2015
-07:00

FEDERAL 1-31-8-18

Spud Date: 10/16/03

Put on Production: 11/25/03

GL: 5100' KB: 5112'

Initial Production: 44 BOPD, 15 MCFD, 32 BWPD

Injection Wellbore Diagram

SURFACE CASING

CSG SIZE: 8-5/8"

GRADE: J-55

WEIGHT: 24#

LENGTH: 7 jts. (305.26')

DEPTH LANDED: 315.26' KB

HOLE SIZE: 12-1/4"

CEMENT DATA: 150 sxs Class "G" cmt, est 3.5 bbls cmt to surf.

PRODUCTION CASING

CSG SIZE: 5-1/2"

GRADE: J-55

WEIGHT: 15.5#

LENGTH: 142 jts. (6387.71')

DEPTH LANDED: 6385.71' KB

HOLE SIZE: 7-7/8"

CEMENT DATA: 300 sxs Prem. Lite II mixed & 425 sxs 50/50 POZ.

CEMENT TOP AT: 150'

TUBING

SIZE/GRADE/WT.: 2-7/8" / J-55 / 6.5#

NO. OF JOINTS: 136 jts. (4391.00')

SEATING NIPPLE: 2-7/8" (1.10')

SN LANDED AT: 4403.00' KB

ARROWSET #1 PACKER CE @: 4407.20'

TOTAL STRING LENGTH: EOT @ 4410.20' W/12' KB

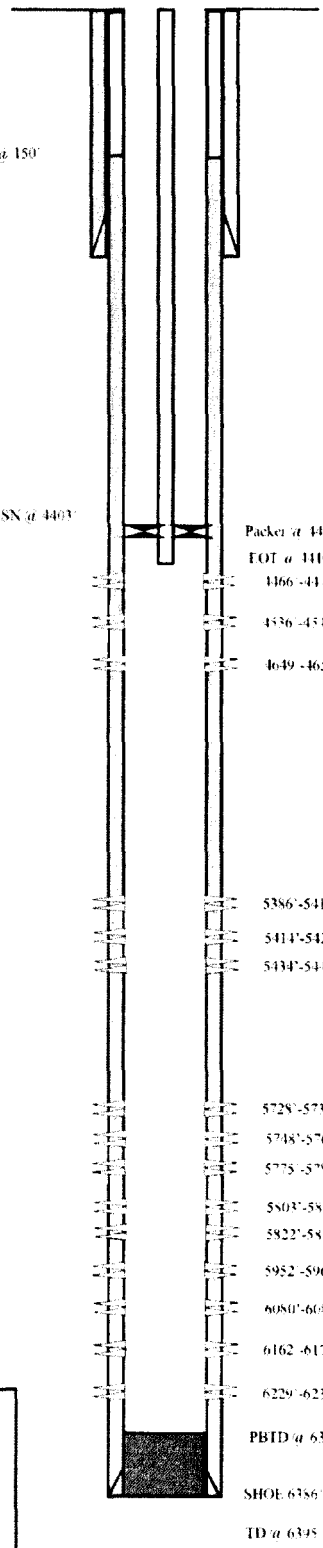

FRAC JOB

11/17/03	6162'-6234'	**Frac CP4 and 5 sands as follows:** 31,000# 20/40 sand in 344 bbls Viking I-25 fluid. Treated @ avg press of 2025 psi w/avg rate of 24.6 BPM. ISIP 2445 psi. Calc flush: 6160 gal. Actual flush: 6174 gal.
11/17/03	6080'-6089'	**Frac CP3 sands as follows:** 30,000# 20/40 sand in 338 bbls Viking I-25 fluid. Treated @ avg press of 2170 psi w/avg rate of 24.8 BPM. ISIP 1710 psi. Calc flush: 6078 gal. Actual flush: 6119 gal.
11/17/03	5952'-5961'	**Frac CP1 sands as follows:** 25,000# 20/40 sand in 307 bbls Viking I-25 fluid. Treated @ avg press of 2170 psi w/avg rate of 24.6 BPM. ISIP 2180 psi. Calc flush: 5950 gal. Actual flush: 5989 gal.
11/17/03	5728'-5833'	**Frac LODC sands as follows:** 240,000# 20/40 sand in 1563 bbls Viking I-25 fluid. Treated @ avg press of 1855 psi w/avg rate of 24.9 BPM. ISIP 2050 psi. Calc flush: 5726 gal. Actual flush: 5767 gal.
11/19/03	5386-5446'	**Frac B sands as follows:** 120,000# 20/40 sand in 844 bbls Viking I-25 fluid. Treated @ avg press of 1520 psi w/avg rate of 24.8 BPM. ISIP 1520 psi. Calc flush: 5384 gal. Actual flush: 5426 gal.
11/19/03	4649'-4654'	**Frac GB6 sands as follows:** 30,000# 20/40 sand in 302 bbls Viking I-25 fluid. Treated @ avg press of 2675 psi w/avg rate of 25 BPM. ISIP 2120 psi. Calc flush: 4647 gal. Actual flush: 4704 gal.
11/19/03	4536'-4548'	**Frac GB4 sands as follows:** 65,000# 20/40 sand in 514 bbls Viking I-25 fluid. Treated @ avg press of 2125 psi w/avg rate of 24.8 BPM. ISIP 2050 psi. Calc flush: 4534 gal. Actual flush: 4578 gal.
11/19/03	4466'-4479'	**Frac GB2 sands as follows:** 49,750# 20/40 sand in 419 bbls Viking I-25 fluid. Treated @ avg press of 2356 psi w/avg rate of 24.8 BPM. ISIP 2720 psi. Calc flush: 4464 gal. Actual flush: 4494 gal.
12/18/04		**Parted rods.** Update rod detail.
4-29-05		**Parted rods.** Update rod and tubing detail.
6-25-05		**Pump change.** Update rod and tubing detail.
1/16/06		**Well converted to an Injector.**
1/30/06		**MIT Completed.**
12/16/10		**5 YR MIT**

PERFORATION RECORD

11/14/03	6229'-6234'	4 JSPF	20 holes
11/14/03	6162'-6172'	4 JSPF	40 holes
11/17/03	6080'-6089'	4 JSPF	36 holes
11/17/03	5952'-5961'	4 JSPF	36 holes
11/17/03	5822'-5833'	2 JSPF	22 holes
11/17/03	5803'-5811'	2 JSPF	16 holes
11/17/03	5775'-5788'	2 JSPF	26 holes
11/17/03	5748'-5764'	2 JSPF	32 holes
11/17/03	5728'-5736'	2 JSPF	16 holes
11/17/03	5434'-5446'	2 JSPF	24 holes
11/17/03	5414'-5422'	2 JSPF	16 holes
11/17/03	5386'-5411'	2 JSPF	50 holes
11/19/03	4649'-4654'	4 JSPF	20 holes
11/19/03	4536'-4548'	4 JSPF	48 holes
11/19/03	4466'-4479'	4 JSPF	52 holes

NEWFIELD

Federal 1-31-8-18

987' FNL & 685' FEL

NENE Section 31-T8S-R18E

Uintah Co, Utah

API #43-047-34494; Lease #UTU-74872

CD 1/30/06