Form DOGC-1a

SUBMIT IN TRIPLICATE*
(Other instructions on reverse side)

STATE OF UTAH
DEPARTMENT OF NATURAL RESOURCES
DIVISION OF OIL & GAS

APPLICATION FOR PERMIT TO DRILL, DEEPEN, OR PLUG BACK

1a. Type of Work
DRILL [X] DEEPEN [ ] PLUG BACK [ ]

b. Type of Well
Oil Well [X] Gas Well [ ] Other Single Zone [X] Multiple Zone [ ]

2. Name of Operator
Exxon Corporation

3. Address of Operator
P. O. Box 1600, Midland, TX 79702

4. Location of Well (Report location clearly and in accordance with any State requirements.*)
At surface
3227' FSL and 503' FWL of Section (Irregular section) SW NW
At proposed prod. zone

5. Lease Designation and Serial No.
ML-3175

6. If Indian, Allottee or Tribe Name
---

7. Unit Agreement Name
~~Walker Hollow Unit~~

8. Farm or Lease Name
Walker Hollow ~~Unit~~

9. Well No.
72

10. Field and Pool, or Wildcat
UNDESIGNATED
~~Walker Hollow~~

11. Sec., T., R., M., or Blk. and Survey or Area
Sec. 2, T7S, R23E

12. County or Parrish 13. State
Uintah Utah

14. Distance in miles and direction from nearest town or post office*
30 miles SE from Vernal

15. Distance from proposed* location to nearest property or lease line, ft. (Also to nearest drlg. line, if any) 503' lease line 503' drlg line

16. No. of acres in lease
3,224.20

17. No. of acres assigned to this well
40

18. Distance from proposed location* to nearest well, drilling, completed, or applied for, on this lease, ft.
2826' to #1

19. Proposed depth
6100' GREEN RIVER

20. Rotary or cable tools
Rotary

21. Elevations (Show whether DF, RT, GR, etc.)
Ungraded GR 5339'

22. Approx. date work will start*
June 15, 1982

23. PROPOSED CASING AND CEMENTING PROGRAM

Size of Hole	Size of Casing	Weight per Foot	Setting Depth	Quantity of Cement
12 1/4"	9 5/8"	36#	400'	300 cu. ft.
8 3/4"	7"	20, 23#	6100'	675 cu. ft.

RECEIVED
MAY 24 1982
DIVISION OF
OIL, GAS & MINING

APPROVED BY THE STATE OF UTAH DIVISION OF OIL, GAS, AND MINING
DATE: 6/1/82
BY: [illegible]

IN ABOVE SPACE DESCRIBE PROPOSED PROGRAM: If proposal is to deepen or plug back, give data on present productive zone and proposed new productive zone. If proposal is to drill or deepen directionally, give pertinent data on subsurface locations and measured and true vertical depths. Give blowout preventer program, if any.

24.
Signed Melva Kripling Title Unit Head Date May 18, 1982

(This space for Federal or State office use)

Permit No. ..... Approval Date .....

Approved by ..... Title ..... Date .....
Conditions of approval, if any:

*See Instructions On Reverse Side

PROJECT

EXXON COMPANY U.S.A.

Well location, ~~Walker Hollow~~ #72, located as shown in the SW 1/4 NW 1/4 Section 2, T 7 S, R 23 E, S.L.B.&M. Uintah County, Utah.

T 7 S, R 23 E, S.L.B.&M.

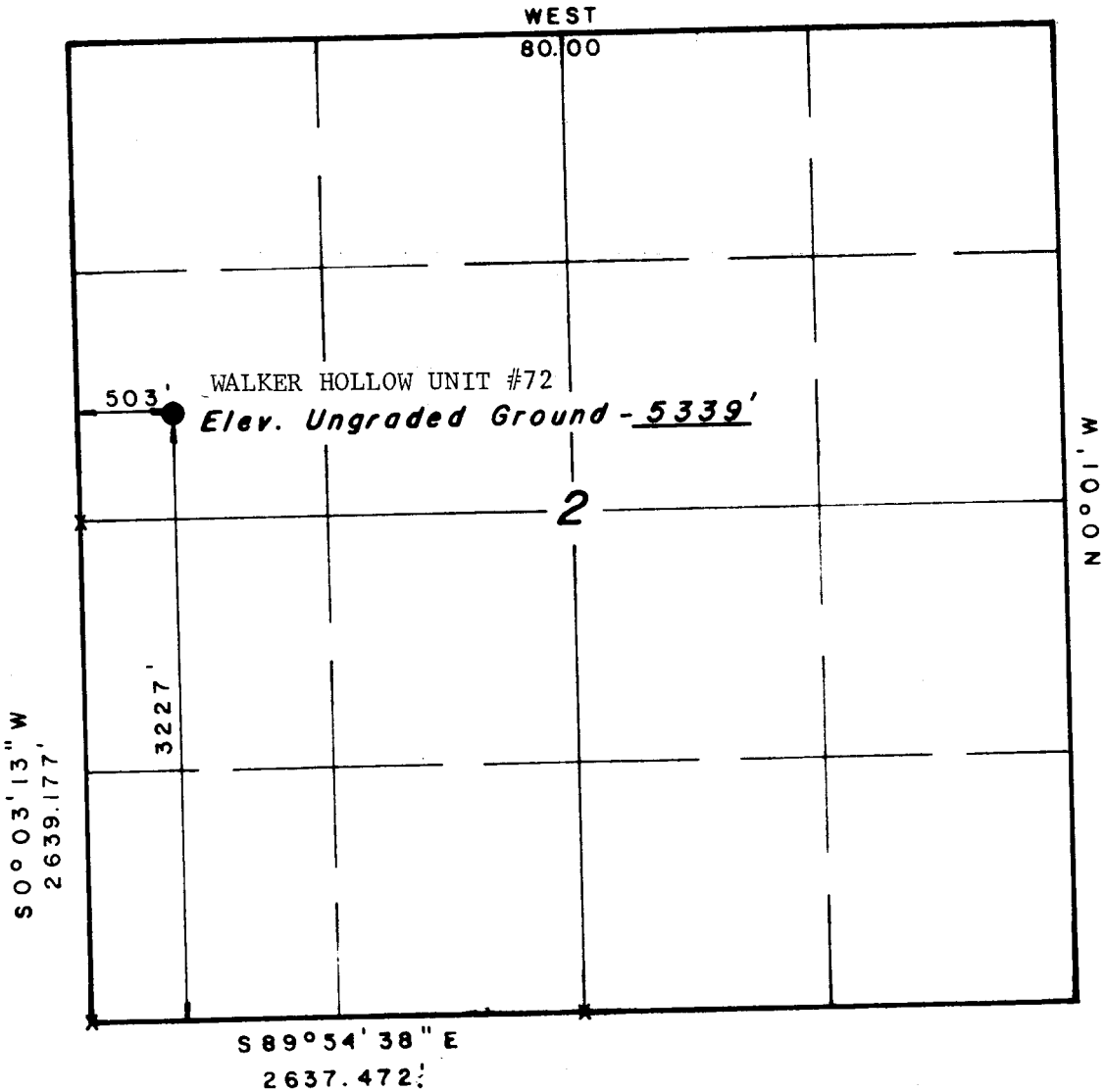

X = Corners Located

CERTIFICATE

THIS IS TO CERTIFY THAT THE ABOVE PLAT WAS PREPARED FROM FIELD NOTES OF ACTUAL SURVEYS MADE BY ME OR UNDER MY SUPERVISION AND THAT THE SAME ARE TRUE AND CORRECT TO THE BEST OF MY KNOWLEDGE AND BELIEF

REGISTERED LAND SURVEYOR
REGISTRATION № 2454
STATE OF UTAH

UINTAH ENGINEERING & LAND SURVEYING
P.O. BOX Q – 85 SOUTH – 200 EAST
VERNAL, UTAH - 84078

SCALE 1" = 1000'	DATE 11-24-81
PARTY DA KR JK LZ	REFERENCES GLO Plat
WEATHER Fair	FILE EXXON

Walker Hollow Unit No. 72
Section 2, T7S, R23E
Uintah County, Utah

1. The geologic name of the surface formation: Tertiary

2. The estimated tops of important geological markers:

Green River	2950'
Green River "D" Zone, Upper 4-A	4590'
Green River "D" Zone, Lower	5590'

3. The estimated depths at which anticipated water, oil, gas or other mineral bearing formations are expected to be encountered:

Fresh Water	Surface to 300'
Oil and Gas	4930' to TD

4. Proposed casing program:

String	Depth Interval	Size	Weight/Grade	Condition
Surface	0 - 400'	9-5/8"	36#/K-55	New or Used
Production	0 - 6100'	7"	20#&23#/K-55	New or Used

5. Minimum specifications for pressure control equipment:

a. Wellhead Equipment - Threaded type 2000 psi WP.

b. Blowout Preventers - Refer to attached drawing and list of equipment titled "Type II-C" for description of BOP stack and choke manifold.

c. BOP Control Unit - Unit will be hydraulically operated and have at least three (3) control stations.

d. Testing - When installed on the 9-5/8" surface casing the BOP stack will be tested to a low pressure (200-300 psi) and to 1500 psi. Casing rams will be tested in like manner when installed prior to running production casing. An operational test of the blow-out preventers will be performed on each round trip (but not more than once each day); the annular and pipe ram preventers will be closed on drill pipe, and the blind rams will be closed while pipe is out of the hole.

6. Type and anticipated characteristics of drilling fluid:

Depth Interval	Mud Type
0-Surface Casing Seat	Fresh Water Spud Mud
Surface Casing Seat - 2800'	Fresh Water (Uncontrolled Properties)
2800-TD	8.5 - 9.1 ppg Fresh Water Mud

Not less than 200 barrels of fluid will be maintained in the pits. Weighting material should not be needed.

7. Auxiliary Control Equipment:

   a. Kelly Cocks: Upper and lower installed on kelly.

   b. Safety Valve: Full opening ball type to fit each type and size of drill pipe in use will be available on rig floor at all times, in open position for stabbing into drill pipe when kelly is not in the string.

   c. Trip tank to insure that hole is full and takes proper amount of fluid on trips, will be used during drilling of production hole.

8. Testing, Logging, and Completion Programs:

   a. Logging: DIL, Sonic, FDC-CNL-GR-Cal, and Repeat Formation Tester. Mud logger from approximately 2500' to TD.

   b. Completion - Formation: Green River "D"

   Proposed Completion Procedure: Frac selectively with Polymulsion and sand. See attached wellsite layout for approximate positioning of completion equipment.

   c. Production Method: Rod pump through 2-7/8" tubing.

9. No abnormal pressure or hydrogen sulfide hazards are anticipated.

10. Starting date of drilling operations will depend on rig availability. Subject to rig availability, we anticipate that drilling and completion operations will begin about April 1, 1982 and be finished by May 20, 1982.

RAS/jc

MIDLAND DRILLING ORGANIZATION
BLOWOUT PREVENTER SPECIFICATION
TYPE II - C

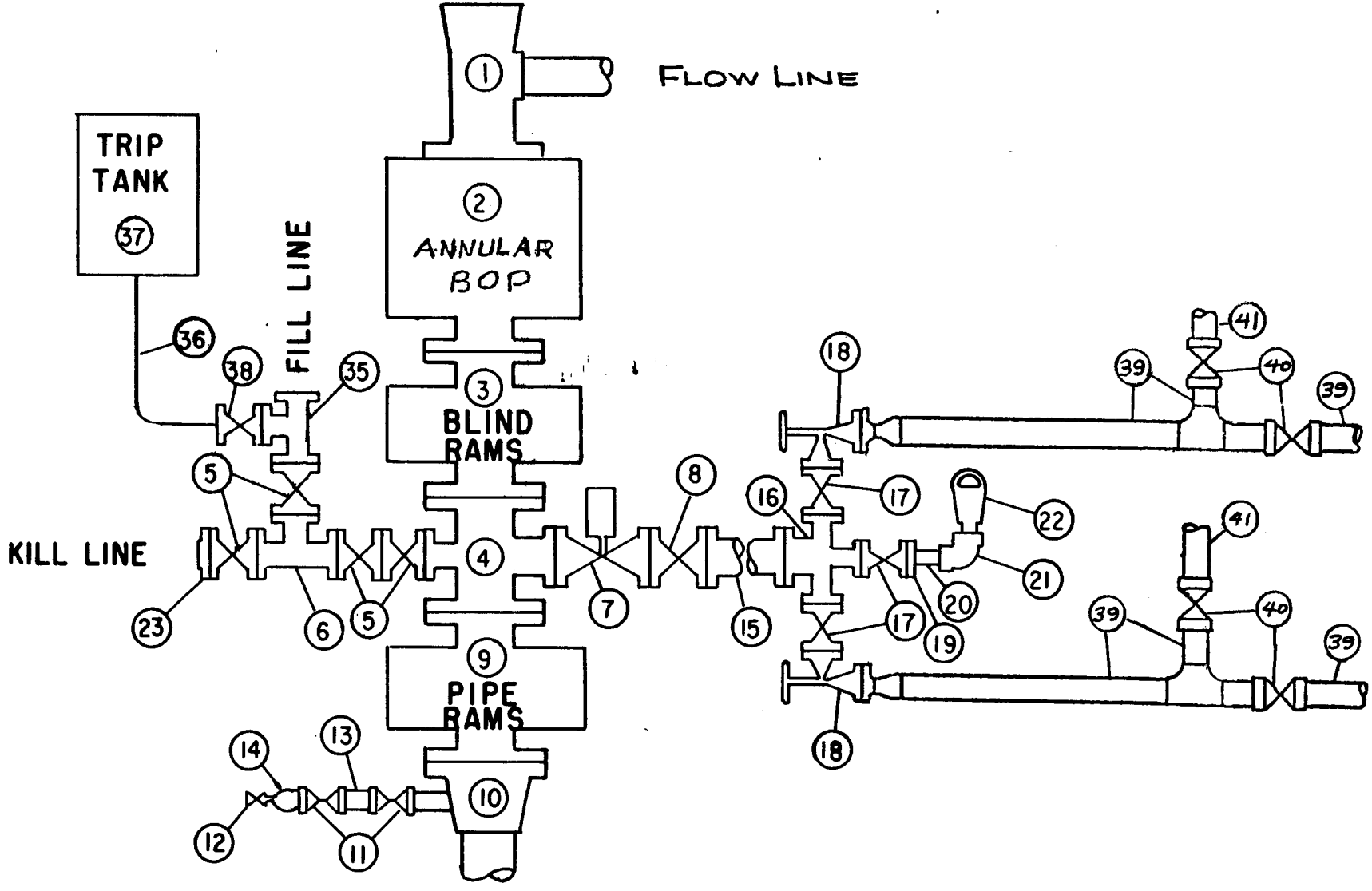

9/15/73

BLOWOUT PREVENTER SPECIFICATION
EQUIPMENT DESCRIPTION

TYPE II-C

All equipment should be at least 2000 psi psi WP or higher unless otherwise specified.

1. Bell nipple.
2. Hydril or Shaffer bag type preventer.
3. Ram type pressure operated blowout preventer with blind rams.
4. Flanged spool with one 4-inch and one 2-inch (minimum) outlet.
5. 2-inch (minimum) flanged plug or gate valve.
6. 2-inch by 2-inch by 2-inch (minimum) flanged tee.
7. 4-inch pressure operated gate valve.
8. 4-inch flanged gate or plug valve.
9. Ram type pressure operated blowout preventer with pipe rams.
10. Flanged type casing head with one side outlet (furnished by Exxon).
11. 2-inch threaded (or flanged) plug or gate valve (furnished by Exxon). Flanged on 5000# WP, threaded on 3000# WP or less.
12. Needle valve (furnished by Exxon).
13. 2-inch nipple (furnished by Exxon).
14. Tapped bull plug (furnished by Exxon).
15. 4-inch flanged spacer spool.
16. 4-inch by 2-inch by 2-inch by 2-inch flanged cross.
17. 2-inch flanged plug or gate valve.
18. 2-inch flanged adjustable choke.
19. 2-inch threaded flange.
20. 2-inch XXH nipple.
21. 2-inch forged steel 90° Ell.
22. Cameron (or equal.) threaded pressure gage.
23. Threaded flange.

35. 2-inch flanged tee.
36. 3-inch (minimum) hose. (Furnished by Exxon).
37. Trip tank. (Furnished by Exxon).
38. 2-inch flanged plug or gate valve.
39. 2-1/2-inch pipe, 300' to pit, anchored.
40. 2-1/2-inch SE valve.
41. 2-1/2-inch line to steel pit or separator.

NOTES:

1. Items 3, 4 and 9 may be replaced with double ram type preventer with side outlets between the rams.

2. The two valves next to the stack on the fill and kill line to be closed unless drill string is being pulled.

3. Kill line is for emergency use only. This connection shall not be used for filling.

4. Replacement pipe rams and blind rams shall be on location at all times.

5. Only type U, LWS and QRC ram type preventers with secondary seals are acceptable for 5000 psi WP and higher BOP stacks.

6. Type E ram-type BOP's with factory modified side outlets may be used on 3000 psi or lower WP BOP stacks.

** FILE NOTATIONS **

DATE: May 26, 1982

OPERATOR: Exxon Corporation

WELL NO: Walker Hollow ~~Unit~~ #72

Location: Sec. 2 T. 7S R. 23E County: Uintah

File Prepared: ☑ Entered on N.I.D: ☐

Card Indexed: ☐ Completion Sheet: ☐

API Number 43-047-31227

CHECKED BY:

Petroleum Engineer: OK

Director:

Administrative Aide: OK As Per Rule C-3

APPROVAL LETTER:

Bond Required: ☑ OK Survey Plat Required: ☐

Order No. O.K. Rule C-3 ☐

Rule C-3(c), Topographic Exception - company owns or controls acreage within a 660' radius of proposed site ☐

Lease Designation ☐ Plotted on Map ☑

Approval Letter Written ☐

Hot Line ☑ P.I. ☑

June 2, 1982

Exxon Corporation
P.O. Box 1600
Midland, Texas 79702

RE: Well No. Walker Hollow 72
Sec. 2, T7S, R23E
Uintah County

Insofar as this office is conerned, approval to drill the above referred to oil well is hereby granted in accordance with Rule C-3, General Rules and Regulations and Rules of Practice and Procedure.

Should you determine that it will be necessary to plug and abandon this well, you are hereby requested to immediately notify the following:

CLEON B. FEIGHT
Office: 533-5771
Home: 466-4455

Enclosed please find Form OGC-8-X, which is to be completed whether or not water sands (acquifers) are encountered during drilling. Your cooperation in completing this form will be appreciated.

Further, it is requested that this Division be notified within 24 hours after drilling operations commence and that the drilling contractor and rig number be identified.

The API number assigned to this well is 43-047-31227.

Sincerely,

DIVISION OF OIL, GAS AND MINING

Ronald J. Firth
Chief Petroleum Engineer

RJF:SC
cc: State Lands
Enclosure

DIVISION OF OIL, GAS AND MINING

SPUDDING INFORMATION

NAME OF COMPANY: EXXON USA

WELL NAME: Walker Hollow Unit #72

SECTION SWNW 2 TOWNSHIP 7 S RANGE 23 E COUNTY Uintah

DRILLING CONTRACTOR Shelby

RIG # 10

SPUDDED: DATE 8-18-82

TIME 4:00 PM

HOW Rotary

DRILLING WILL COMMENCE

REPORTED BY David Steele

TELEPHONE # 801-789-4200

DATE 8-18-82 SIGNED AS

MAT

Form DOGC-4

STATE OF UTAH

DEPARTMENT OF NATURAL RESOURCES

DIVISION OF OIL & GAS CONSERVATION

1588 WEST NORTH TEMPLE
SALT LAKE CITY, UTAH 84116
328-5771

State Lease No. ML-3175
Federal Lease No.
Indian Lease No.
Fee & Pat.

REPORT OF OPERATIONS AND WELL STATUS REPORT

STATE Utah COUNTY Uintah FIELD/LEASE Undesignated/Walker Hollow

The following is a correct report of operations and production (including drilling and producing wells) for the month of: August, 19 82.

Agent's Address P. O. Box 1600
Midland, TX 79702

Phone No. 915/686-4406

Company Exxon Corporation
Signed Meeva Knipling
Title Unit Head

Sec. and ¼ of ¼	Twp.	Range	Well No.	Days Produced	Barrels of Oil	Gravity	Cu. Ft. of Gas (In thousands)	Gallons of Gasoline Recovered	Barrels of Water (if none, so state)	REMARKS (If drilling, depth; if shut down, cause; date and result of test for gasoline content of gas)
2 SW/NW	7S	23E	72	None	None	None	None	None	None	43-047-31227 Spud 8-18-82. Drlg @ 4333' in sandstone, shale. Ran 9 5/8" casing.

Orig & 1cc: State of Utah, Natural Resource and Energy, Oil, Gas and Mining, 4241 State Office Bldg., Salt Lake City, UT 84114
2cc: MMS, P. O. Box 2859, Casper, Wy 82602
1cc: Drilling Section
1cc: Central File
2cc: Proration Specialist
1cc: Oklahoma City District

GAS: (MCF)
Sold NONE
Flared/Vented NONE
Used On/Off Lease NONE

OIL or CONDENSATE: (To be reported in Barrels)
On hand at beginning of month NONE
Produced during month NONE
Sold during month NONE
Unavoidably lost NONE
Reason:
On hand at end of month NONE

DRILLING/PRODUCING WELLS: This report must be filed on or before the sixteenth day of the succeeding month following production for each well. Where a well is temporarily shut-in, a negative report must be filed. *THIS REPORT MUST BE FILED IN DUPLICATE.*

Form DOGC-4

STATE OF UTAH

DEPARTMENT OF NATURAL RESOURCES

DIVISION OF OIL & GAS CONSERVATION

1588 WEST NORTH TEMPLE
SALT LAKE CITY, UTAH 84116
328-5771

State Lease No. ML 3175
Federal Lease No.
Indian Lease No.
Fee & Pat.

REPORT OF OPERATIONS AND WELL STATUS REPORT

STATE Utah COUNTY Uintah FIELD/LEASE Undesignated/Walker Hollow

The following is a correct report of operations and production (including drilling and producing wells) for the month of: September, 19 82.

Agent's Address P. O. Box 1600
Midland, TX 79702

Phone No. 915/686-4406

Company Exxon Corporation
Signed Melba Knighting
Title Unit Head

Sec. and ¼ of ¼	Twp.	Range	Well No.	Days Produced	Barrels of Oil	Gravity	Cu. Ft. of Gas (In thousands)	Gallons of Gasoline Recovered	Barrels of Water (if none, so state)	REMARKS (If drilling, depth; if shut down, cause; date and result of test for gasoline content of gas)
2 SW/NW	7S	23E	72	None	None	None	None	None	None	Drlg. @ 5990' in siltstone, sandstone, shale. Logged. Ran 7" casing. FRR 9-7-82. PBTD 5727'. SD due to weather and road conditions.

Orig & 1cc: State of Utah, Natural Resource and Energy, Oil Gas and Mining, 4241 State Office Bldg., Salt Lake City, UT 84114
2cc: MMS, P. O. Box 2859, Casper, WY 82602
1cc: Drilling Section
1cc: Central File
2cc: Proration Specialist
1cc: Oklahoma City District

GAS: (MCF)
Sold NONE
Flared/Vented NONE
Used On/Off Lease NONE

OIL or CONDENSATE: (To be reported in Barrels)
On hand at beginning of month NONE
Produced during month NONE
Sold during month NONE
Unavoidably lost NONE
Reason:
On hand at end of month NONE

DRILLING/PRODUCING WELLS: This report must be filed on or before the sixteenth day of the succeeding month following production for each well. Where a well is temporarily shut-in, a negative report must be filed. *THIS REPORT MUST BE FILED IN DUPLICATE.*

FILE IN TRIPLICATE
FORM OGC-8-X

56 64 03

STATE OF UTAH
DEPARTMENT OF NATURAL RESOURCES
DIVISION OF OIL, GAS AND MINING
1588 West North Temple
Salt Lake City, Utah 84116

REPORT OF WATER ENCOUNTERED DURING DRILLING

Well Name & Number WALKER Hollow #72

Operator EXXON Co. USA Address PO BOX 230; MIDLAND, TX. 79701

Contractor SHELBY DRILLING, INC. Address PROGRESS PLACE I 5350 S. ROSSLYN, STE 300 ENGLEWOOD, COLO. 80111

Location SW ¼ NW ¼ Sec. 2 T: 7S R. 23E County UINTAH

Water Sands

	Depth		Volume	Quality
	From	To	Flow Rate or Head	Fresh or Salty
1.	NO WATER FLOWS WERE ENCOUNTERED			
2.				
3.				
4.				
5.				

(Continue of reverse side if necessary)

Formation Tops

FORMATION	APPROXIMATE TOP
DUCHESNE RIVER	SURFACE
GREEN RIVER	3000'
GREEN RIVER - UPPER LA	4500'
GREEN RIVER - LOWER	5400'

Remarks

NOTE: (a) *Report on this form as provided for in Rule C-20, General Rules and Regulations and Rules of Practice and Procedure.*

(b) *If a water analysis has been made of the above reported zone, please forward a copy along with this form.*

Form 9-330
(Rev. 5-63)

UNITED STATES
DEPARTMENT OF THE INTERIOR
GEOLOGICAL SURVEY

SUBMIT IN DUPLICATE*
(See other instructions on reverse side)

Form approved.
Budget Bureau No. 42-R355.5.

5

WELL COMPLETION OR RECOMPLETION REPORT AND LOG*

1a. TYPE OF WELL: OIL WELL [X] GAS WELL [ ] DRY [ ] Other

b. TYPE OF COMPLETION: NEW WELL [X] WORK OVER [ ] DEEP-EN [ ] PLUG BACK [ ] DIFF. RESVR. [ ] Other

2. NAME OF OPERATOR: Exxon Corporation

3. ADDRESS OF OPERATOR: P. O. Box 1600, Midland, Texas 79702

4. LOCATION OF WELL (Report location clearly and in accordance with any State requirements)*
At surface 3227' FSL and 503' FWL of Section (Irregular section)
At top prod. interval reported below
At total depth

5. LEASE DESIGNATION AND SERIAL NO.: ML-3175
6. IF INDIAN, ALLOTTEE OR TRIBE NAME:
7. UNIT AGREEMENT NAME: Walker Hollow
8. FARM OR LEASE NAME: Walker Hollow
9. WELL NO.: 72
10. FIELD AND POOL, OR WILDCAT: Walker Hollow
11. SEC., T., R., M., OR BLOCK AND SURVEY OR AREA: Sec. 2, T7S, R23E

14. PERMIT NO. | DATE ISSUED
12. COUNTY OR PARISH: Uintah
13. STATE: Utah

15. DATE SPUDDED: 8-18-82
16. DATE T.D. REACHED: 9-4-82
17. DATE COMPL. (Ready to prod.): 12-1-82
18. ELEVATIONS (DF, RKB, RT, GR, ETC.)*: 5354' KB
19. ELEV. CASINGHEAD:

20. TOTAL DEPTH, MD & TVD: 5790'
21. PLUG, BACK T.D., MD & TVD: 5727'
22. IF MULTIPLE COMPL., HOW MANY*: --
23. INTERVALS DRILLED BY: → ROTARY TOOLS: 0-5790' CABLE TOOLS:

24. PRODUCING INTERVAL(S), OF THIS COMPLETION—TOP, BOTTOM, NAME (MD AND TVD): Green River 5a - La, 4902'-5624'
25. WAS DIRECTIONAL SURVEY MADE: No

26. TYPE ELECTRIC AND OTHER LOGS RUN: DIL, FDC/CNL, GR, RFT, Caliper
27. WAS WELL CORED: No

28. CASING RECORD (Report all strings set in well)

CASING SIZE	WEIGHT, LB./FT.	DEPTH SET (MD)	HOLE SIZE	CEMENTING RECORD	AMOUNT PULLED
20"		40'		250 sx Class H	
9 5/8"	36# K-55 ST&C	420'	12 1/4"	200 sx 50-50 poz; 50 sx Class H	
7"	20,23# K-55 ST&C	5780'	8 3/4"	1275 sx Class H	

29. LINER RECORD

SIZE	TOP (MD)	BOTTOM (MD)	SACKS CEMENT*	SCREEN (MD)

30. TUBING RECORD

SIZE	DEPTH SET (MD)	PACKER SET (MD)
2 7/8"	5699'	

31. PERFORATION RECORD (Interval, size and number)
5600'-5624' 4" csg gun 2 spf
5508'-5538' " " " " "
5474'-5484' " " " " "
5406'-5418' " " " " "
4902'-5016' " " " 4 spf

32. ACID, SHOT, FRACTURE, CEMENT SQUEEZE, ETC.

DEPTH INTERVAL (MD)	AMOUNT AND KIND OF MATERIAL USED
5600'-5624'	2400 gal 15% HCl;8000 gal poly fra
5508'-5538'	2600 gal 15% HCL;8000 gal poly fra
5474'-5484'	1000 gal 15% HCl acid
5406'-5418'	1200 gal 15% HCl acid

33.* PRODUCTION Continued on back

DATE FIRST PRODUCTION: 11-30-82
PRODUCTION METHOD (Flowing, gas lift, pumping—size and type of pump): Pumping 1 3/4" Pump
WELL STATUS (Producing or shut-in): Producing

DATE OF TEST	HOURS TESTED	CHOKE SIZE	PROD'N. FOR TEST PERIOD	OIL—BBL.	GAS—MCF.	WATER—BBL.	GAS-OIL RATIO
12-1-82	24		→	48	TSTM	240	

FLOW. TUBING PRESS.	CASING PRESSURE	CALCULATED 24-HOUR RATE	OIL—BBL.	GAS—MCF.	WATER—BBL.	OIL GRAVITY-API (CORR.)
		→				

34. DISPOSITION OF GAS (Sold, used for fuel, vented, etc.): Used on lease for fuel
TEST WITNESSED BY:

35. LIST OF ATTACHMENTS:

36. I hereby certify that the foregoing and attached information is complete and correct as determined from all available records

SIGNED Shari L. Armstrong TITLE Accountant DATE December 16, 1982

*(See Instructions and Spaces for Additional Data on Reverse Side)

RECEIVED DEC 20 1982 DIVISION OF OIL, GAS & MINING

INSTRUCTIONS

General: This form is designed for submitting a complete and correct well completion report and log on all types of lands and leases to either a Federal agency or a State agency, or both, pursuant to applicable Federal and/or State laws and regulations. Any necessary special instructions concerning the use of this form and the number of copies to be submitted, particularly with regard to local, area, or regional procedures and practices, either are shown below or will be issued by, or may be obtained from, the local Federal and/or State office. See instructions on items 22 and 24, and 33, below regarding separate reports for separate completions.

If not filed prior to the time this summary record is submitted, copies of all currently available logs (drillers, geologists, sample and core analysis, all types electric, etc.), formation and pressure tests, and directional surveys, should be attached hereto, to the extent required by applicable Federal and/or State laws and regulations. All attachments should be listed on this form, see item 35.

Item 4: If there are no applicable State requirements, locations on Federal or Indian land should be described in accordance with Federal requirements. Consult local State or Federal office for specific instructions.

Item 18: Indicate which elevation is used as reference (where not otherwise shown) for depth measurements given in other spaces on this form and in any attachments.

Items 22 and 24: If this well is completed for separate production from more than one interval zone (multiple completion), so state in item 22, and in item 24 show the producing interval, or intervals, top(s), bottom(s) and name(s) (if any) for only the interval reported in item 33. Submit a separate report (page) on this form, adequately identified, for each additional interval to be separately produced, showing the additional data pertinent to such interval.

Item 29: *"Sacks Cement":* Attached supplemental records for this well should show the details of any multiple stage cementing and the location of the cementing tool.

Item 33: Submit a separate completion report on this form for each interval to be separately produced. (See instruction for items 22 and 24 above.)

37. SUMMARY OF POROUS ZONES:
SHOW ALL IMPORTANT ZONES OF POROSITY AND CONTENTS THEREOF; CORED INTERVALS; AND ALL DRILL-STEM TESTS, INCLUDING DEPTH INTERVAL TESTED, CUSHION USED, TIME TOOL OPEN, FLOWING AND SHUT-IN PRESSURES, AND RECOVERIES

FORMATION	TOP	BOTTOM	DESCRIPTION, CONTENTS, ETC.

(continued)

32. Acid, Shot, Fracture, Cement, Squeeze, etc.

Depth Interval	Amount and Kind of Material Used
5488'-5498'	35 sx Class H & 500 gals acid
4902'-5016'	4000 gals 15% Ne acid
5474'-5484'; 5406'-5418'	Cmt sqz w/150 sx Class H

38. GEOLOGIC MARKERS

NAME		TOP MEAS. DEPTH	TOP TRUE VERT. DEPTH
Green River	4a	4555'	
	4b	4613'	
	4c	4661'	
	5b	4977'	
	6a	5084'	
	6b	5100'	
	7a	5209'	
	7c	5330'	
	8a	5402'	
	8b	5430'	
	La_1	5600'	

U.S. GOVERNMENT PRINTING OFFICE: 1963—O-683636
837-497

WH #72 | Sec 2, 7 So, 23E | Pk bly 23 Aug 88

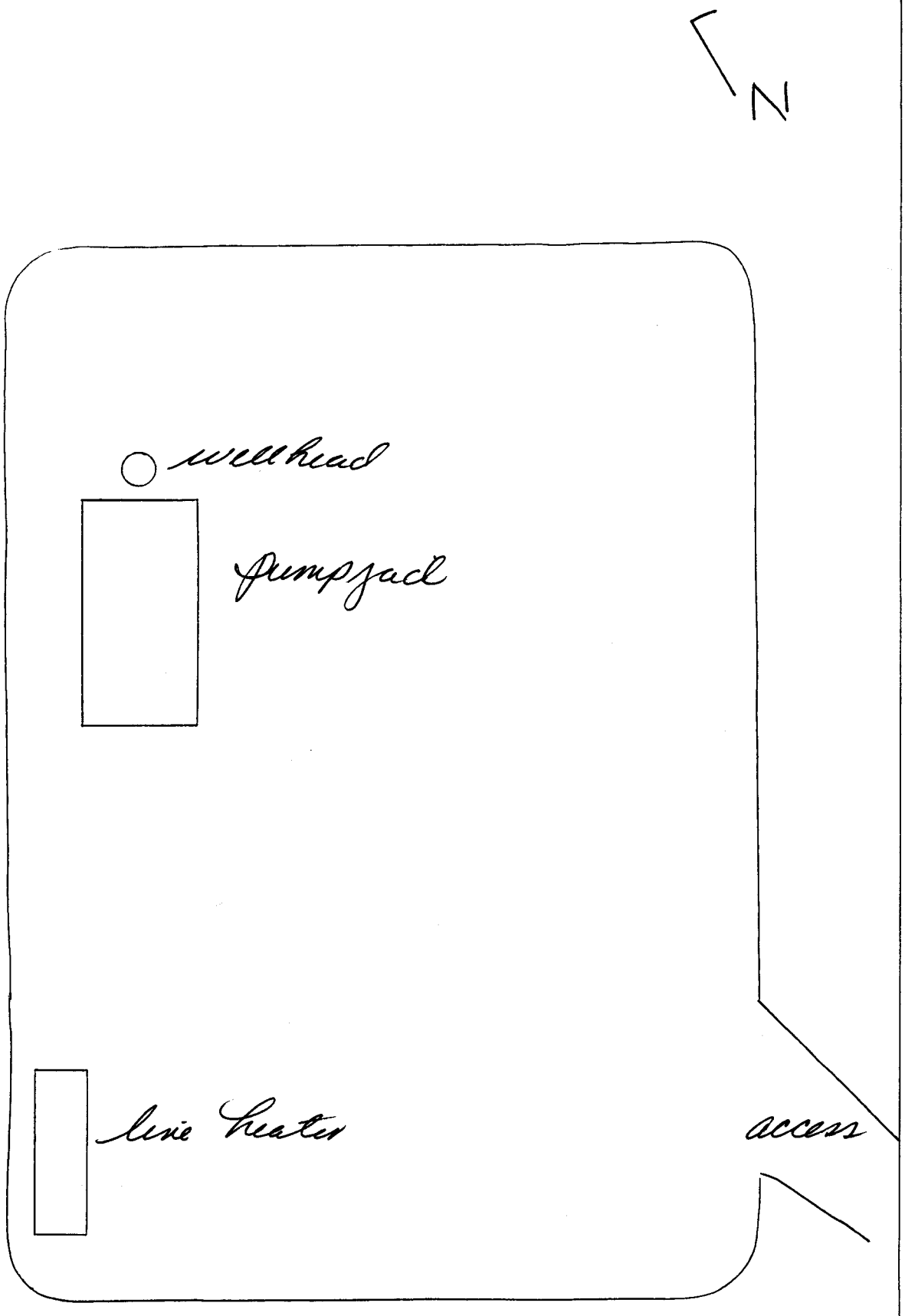

42-381 50 SHEETS 5 SQUARE
42-382 100 SHEETS 5 SQUARE
42-389 200 SHEETS 5 SQUARE
NATIONAL

FORM 10

STATE OF UTAH
DIVISION OF OIL, GAS AND MINING
355 West North Temple, 3 Triad, Suite 350, Salt Lake City, UT 84180-1203

MONTHLY OIL AND GAS PRODUCTION REPORT

OPERATOR NAME AND ADDRESS:

LORA ROARK
EXXON CORPORATION
PO BOX 4721
HOUSTON TX 77210-4721

UTAH ACCOUNT NUMBER: N0420

REPORT PERIOD (MONTH/YEAR): 2 / 95

AMENDED REPORT ☐ **(Highlight Changes)**

Well Name API Number	Entity	Location	Producing Zone	Well Status	Days Oper	Production Volumes OIL(BBL)	GAS(MCF)	WATER(BBL)
WALKER HOLLOW U #62 4304730914	00610	07S 23E 10	GRRV					
KIENITZ FED 2/WHU 63 4304730916	00610	07S 23E 1	GRRV					
WALKER HOLLOW #52 4304730945	00610	07S 24E 8	GRRV					
WALKER HOLLOW #59 4304730946	00610	07S 24E 8	GRRV					
WALKER HOLLOW 64 4304730947	00610	07S 24E 6	GRRV					
WALKER HOLLOW #74 (BAMBERGER FED #1) 4304731031	00610	07S 23E 3	GRRV					
WALKER HOLLOW #73 (KIENITZ FEDERAL) 4304731032	00610	07S 23E 3	GRRV					
WALKER HOLLOW 66 4304731131	00610	07S 23E 10	GRRV					
WALKER HOLLOW U #75 4304731182	00610	07S 23E 2	GRRV					
WALKER HOLLOW #72 4304731227	00610	07S 23E 2	GRRV					
WALKER HOLLOW 76 4304731542	00610	07S 23E 1	GRRV					
WALKER HOLLOW UNIT #77 4304731563	00610	07S 23E 1	GRRV					
WALKER HOLLOW UNIT #69 4304731665	00610	07S 23E 2	GRRV					
					TOTALS			

COMMENTS:

I hereby certify that this report is true and complete to the best of my knowledge. Date:

Name and Signature: Telephone Number:

(12/93)

CORRECTION TO DIRECTOR'S MINUTES OF SEPTEMBER 21, 1994; ML 44446 BUILDING STONE/LIMESTONE

The Director's Minutes of September 21, 1994, list State of Utah Building Stone/Limestone Lease ML 44446 as being cancelled for non-payment. Chemcial Lime Company, lessee, has been notified of their default in this matter and with the right to cure, they have complied with this office and provided the required past due rentals with interest and pentalites. Therefore, the Director's Minutes of Septemer 21, 1994, should be corrected to show that ML 44446 was not cancelled for non-payment.

Upon recommendation of Mr. Cooper, the Director approved the correction to the Director's Minutes of September 21, 1994.

* *

TERMINATION OF THE INDIANOLA UNIT

Hunt Oil Company, operator of the Indianola Unit, has furnished this office with evidence that this unit was terminated by the Bureau of Land Management on February 24, 1995.

The records of the following leases should be noted to show the termination of this unit.

ML 41655	Shell Onshore Ventures, Inc.
ML 41658	Shell Onshore Ventures, Inc.

Due to the termination of the unit, the terms of ML 41655 and ML 41658 will be extended until February 24, 1997.

Upon recommendation of Mr. Bonner, the Director noted the termination of the Indianola Unit and approved the extension of ML 41655 and ML 41658.

STATEWIDE BOND OF LESSEE

Citation Oil & Gas Corporation has submitted an $80,000 State of Utah Statewide Bond of Lessee to cover their oil and gas exploration and development operations on Trust lands. The surety is Gulf Insurance Company, Bond No. 587800.

Upon recommendation of Mr. Bonner, the Director accepted Bond No. 587800 as described above.

EXXON COMPANY, U.S.A.
POST OFFICE BOX 1600 • MIDLAND, TEXAS 79702-1600

MIDLAND PRODUCTION ORGANIZATION
OPERATIONS INTEGRITY

March 23, 1995

Operator Change
Walker Hollow (Green River) Unit
Summit County, Utah

Utah Oil & Gas Conservation Commission
Utah Division of Oil, Gas & Mining
355 West North Temple
State Office Building
3 Triad Center, Suite 350
Salt Lake City, Utah 84180-1203

RECEIVED
MAR 27 1995
DIV OF OIL, GAS & MINING

Attention: Leisha Cordova

Effective April 1, 1995, Citation Oil & Gas Corp. will replace Exxon Corp. as operator of the Walker Hollow (Green River) Unit. Attached is a list of locations, API numbers and lease numbers for wells in the subject unit.

Please direct questions concerning this property transfer to me at (915) 688-7875.

Sincerely,

S. Johnson

Stephen Johnson

SJJ/mym
Enclosure

WALKER HOLLOW (GREEN RIVER) UNIT WELLS

RECEIVED
MAR 27 1995
OIL, GAS & MINING

WELL	1/4 SEC	S-T-R	API NUMBER	LEASE NUMBER
1	SWSW	8-7S-24E	4304715554	U-02512
2	SWNE	8-7S-24E	4304715556	SLC-066357
3	SWSW	7-7S-24E	4304715557	SLC-066357
4	SWSE	12-7S-23E	4304716501 W/W	SLC-066357
5	SWSW	12-7S-23E	4304715558	SLC-066357
6	SWSE	7-7S-24E	4304716502 W/W	SLC-066357
7	NESE	12-7S-23E	4304715559 W/W	SLC-066357
8	SWSE	8-7S-24E	4304716503 W/W	U-02512
10	SWNW	9-7S-24E	4304715561 W/W	U-02512
11	NENW	9-7S-24E	4304715562	U-02512
12	SWSE	4-7S-24E	4304716504 W/W	SLC-066313
13	NESW	8-7S-24E	4304715563	U-02512
14	NESE	7-7S-24E	4304715564	SLC-066357
15	NENW	12-7S-23E	4304715565	SLC-066357
16	NESW	7-7S-24E	4304715566	SLC-066357
17	SWNW	12-7S-23E	4304715567 W/W	SLC-066357
18	SWSE	1-7S-23E	4304715568 W/W	SLC-066312
20	NESE	11-7S-23E	4304715569	SLC-066357
21	NESE	1-7S-23E	4304715570	SLC-066312
22	SWSE	11-7S-23E	4304715571 W/W	SLC-066357
23	SWNE	11-7S-23E	4304715572	SLC-066357
24	NESW	11-7S-23E	4304715573	SLC-066357
25	SWSW	1-7S-23E	4304730040	SLC-066312
26	SWNW	11-7S-23E	4304715548 W/W	SLC-066357
27	SWNW	8-7S-24E	4304730082 W/W	SLC-066357
28	NWSW	9-7S-24E	4304730092	U-02512
29	SWSW	11-7S-23E	4304730093	SLC-066357
30	SWSE	2-7S-23E	4304730094 W/W	ML-3175
31	SWNE	9-7S-24E	4304711512 W/W	U-02512
32	NENE	9-7S-24E	4304730132	U-02512
33	SWNE	12-7S-23E	4304730133	SLC-066357
34	SWNW	7-7S-24E	4304730134 W/W	SLC-066357
35	NENE	11-7S-23E	4304730281 W/W	SLC-066357
36	NESW	12-7S-23E	4304730282	SLC-066357
37	NENW	11-7S-23E	4304730417	SLC-066357
38	NENE	12-7S-23E	4304730418	SLC-066357
39	NESE	10-7S-23E	4304730415	U-02651-C
40	NENE	8-7S-24E	4304730690	SLC-066357
41	NWSE	8-7S-24E	4304730691	U-02512
42	NWSE	11-7S-23E	4304730692	SLC-066357
43	SWNE	1-7S-23E	4304730687	SLC-066312
44	NESE	2-7S-23E	4304730688	ML-3175
45	NENE	1-7S-23E	4304730897	SLC-066312
46	NESW	1-7S-23E	4304730416	SLC-066312
47	SWNE	2-7S-23E	4304730888	SLC-066312
48	NENE	7-7S-24E	4304730891	SLC-066357
49	SWSW	4-7S-24E	4304730892	SLC-066313
52	NWSW	8-7S-24E	4304730945	U-02512
54	SESW	1-7S-23E	4304730893	SLC-066312
55	NWNW	12-7S-23E	4304730894	SLC-066357
56	SENE	11-7S-23E	4304730911	SLC-066357
57	NWNE	11-7S-23E	4304730895	SLC-066357
58	SESE	2-7S-23E	4304730912	ML-3175
59	SESW	8-7S-24E	4304730946	U-02512
60	SESE	11-7S-23E	4304730913	SLC-066357
62	SWNE	10-7S-23E	4304730914	U-02651-C
63	SWNW	1-7S-23E	4304730916	SLC-066312
64	SWNW	6-7S-24E	4304730947	SLC-066313
66	NENE	10-7S-23E	4304731131	U-02651-C
69	NESW	2-7S-23E	4304731665	ML-3175
72	SWNW	2-7S-23E	4304731227	ML-3175
73	SWSE	3-7S-23E	4304731032	SLC-066312
74	SESW	3-7S-23E	4304731031	SLC-066357
75	SWSW	2-7S-23E	4304731182	ML-3175
76	NENW	1-7S-23E	4304731542	SLC-066312
77	NENE	1-7S-23E	4304731563	SLC-066312
101	SWNE	7-7S-24E	4304715555	SLC-066357

FORM 9

STATE OF UTAH
DIVISION OF OIL, GAS AND MINING

RECEIVED
1995
DIV OF OIL, GAS & MINING

SUNDRY NOTICES AND REPORTS ON WELLS

Do not use this form for proposals to drill new wells, deepen existing wells, or to reenter plugged and abandoned wells.
Use APPLICATION FOR PERMIT TO DRILL OR DEEPEN form for such proposals.

5. Lease Designation and Serial Number:

6. If Indian, Allottee or Tribe Name:

7. Unit Agreement Name: Walker Hollow Unit

8. Well Name and Number: see below

9. API Well Number: see below

10. Field and Pool, or Wildcat: Walker Hollow (Green River)

1. Type of Well: OIL ☐ GAS ☐ OTHER:

2. Name of Operator: Citation Oil & Gas Corp.

3. Address and Telephone Number: 8223 Willow Place S. Ste 250 Houston, TX 77070 713-469-9664

4. Location of Well
Footages:
QQ, Sec.,T.,R.,M.:
County: Uintah
State: Utah

11. CHECK APPROPRIATE BOXES TO INDICATE NATURE OF NOTICE, REPORT, OR OTHER DATA

NOTICE OF INTENT
(Submit in Duplicate)

- ☐ Abandonment
- ☐ Casing Repair
- ☐ Change of Plans
- ☐ Conversion to Injection
- ☐ Fracture Treat
- ☐ Multiple Completion
- ☐ Other Change of Operator
- ☐ New Construction
- ☐ Pull or Alter Casing
- ☐ Recompletion
- ☐ Shoot or Acidize
- ☐ Vent or Flare
- ☐ Water Shut-Off

Approximate date work will start _____

SUBSEQUENT REPORT
(Submit Original Form Only)

- ☐ Abandonment *
- ☐ Casing Repair
- ☐ Change of Plans
- ☐ Conversion to Injection
- ☐ Fracture Treat
- ☐ Other _____
- ☐ New Construction
- ☐ Pull or Alter Casing
- ☐ Shoot or Acidize
- ☐ Vent or Flare
- ☐ Water Shut-Off

Date of work completion _____

Report results of Multiple Completions and Recompletions to different reservoirs on WELL COMPLETION OR RECOMPLETION AND LOG form.

* Must be accompanied by a cement verification report.

12. DESCRIBE PROPOSED OR COMPLETED OPERATIONS (Clearly state all pertinent details, and give pertinent dates. If well is directionally drilled, give subsurface locations and measured and true vertical depths for all markers and zones pertinent to this work.)

Effective April 1, 1995 Citation Oil & Gas Corp. took over as operator of the Walker Hollow Unit from Exxon Company, USA.

The wells involved are as follows:

Walker Hollow Unit #1	43-047-15554	Sec. 8 T7S R24E
Walker Hollow Unit #2	43-047-15556	Sec. 8 T7S R24E
Walker Hollow Unit #3	43-047-15557	Sec. 7 T7S R24E
Walker Hollow Unit #4	43-047-16501	Sec.12 T7S R23E
Walker Hollow Unit #5	43-047-15558	Sec.12 T7S R23E
Walker Hollow Unit #6	43-047-16502	Sec. 7 T7S R24E
Walker Hollow Unit #7	43-047-05580	Sec.12 T7S R23E
Walker Hollow Unit #8	43-047-16503	Sec. 8 T7S R24E
Walker Hollow Unit #9	43-047-15560	Sec. 8 T7S R24E
Walker Hollow Unit #10	43-047-15561	Sec. 9 T7S R24E

continued on back

13.
Name & Signature: Sharon Ward Sharon Ward Title: Production Reg. Supv. Date: 4-6-95

(This space for State use only)

The following are the list wells involved in the change operator on the Walker Hollow Unit from Exxon Company USA to Citation Oil & Gas Corp. effective April 1, 1995.

Walker Hollow Unit #11	43-047-15562	Sec. 9 T7S R24E
Walker Hollow Unit #12	43-047-16504	Sec. 4 T7S R24E
Walker Hollow Unit #13	43-047-15563	Sec. 8 T7S R24E
Walker Hollow Unit #14	43-047-15564	Sec. 7 T7S R24E
Walker Hollow Unit #15	43-047-15565	Sec.12 T7S R23E
Walker Hollow Unit #16	43-047-15566	Sec. 7 T7S R24E
Walker Hollow Unit #17	43-047-15567	Sec.12 T7S R23E
Walker Hollow Unit #18	43-047-15568	Sec. 1 T7S R23E
Walker Hollow Unit #20	43-047-15569	Sec.11 T7S R23E
Walker Hollow Unit #21	43-047-15570	Sec. 1 T7S R23E
Walker Hollow Unit #22	43-047-15571	Sec.11 T7S R23E
Walker Hollow Unit #23	43-047-15572	Sec.11 T7S R23E
Walker Hollow Unit #24	43-047-15573	Sec.11 T7S R23E
Walker Hollow Unit #25	43-047-30040	Sec. 1 T7S R23E
Walker Hollow Unit #26	43-047-15548	Sec.11 T7S R23E
Walker Hollow Unit #27	43-047-30082	Sec. 8 T7S R24E
Walker Hollow Unit #28	43-047-30092	Sec. 9 T7S R24E
Walker Hollow Unit #29	43-047-30093	Sec.11 T7S R23E
Walker Hollow Unit #30	43-047-30094	Sec. 2 T7S R23E
Walker Hollow Unit #31	43-047-11512	Sec. 9 T7S R24E
Walker Hollow Unit #32	43-047-30132	Sec. 9 T7S R24E
Walker Hollow Unit #33	43-047-30133	Sec.12 T7S R23E
Walker Hollow Unit #34	43-047-30134	Sec. 7 T7S R24E
Walker Hollow Unit #35	43-047-30281	Sec.11 T7S R23E
Walker Hollow Unit #36	43-047-30282	Sec.12 T7S R23E
Walker Hollow Unit #37	43-047-30417	Sec.11 T7S R23E
Walker Hollow Unit #38	43-047-30418	Sec.12 T7S R23E
Walker Hollow Unit #39	43-047-30415	Sec.12 T7S R23E
Walker Hollow Unit #40	43-047-30690	Sec. 8 T7S R24E
Walker Hollow Unit #41	43-047-30691	Sec. 8 T7S R24E
Walker Hollow Unit #42	43-047-30692	Sec.11 T7S R23E
Walker Hollow Unit #43	43-047-30687	Sec. 1 T7S R23E
Walker Hollow Unit #44	43-047-30688	Sec. 2 T7S R23E
Walker Hollow Unit #45	43-047-30897	Sec. 1 T7S R23E
Walker Hollow Unit #46	43-047-30416	Sec. 1 T7S R23E
Walker Hollow Unit #47	43-047-30888	Sec. 2 T7S R23E
Walker Hollow Unit #48	43-047-30891	Sec. 7 T7S R24E
Walker Hollow Unit #49	43-047-30892	Sec. 4 T7S R24E
Walker Hollow Unit #52	43-047-30945	Sec. 8 T7S R24E
Walker Hollow Unit #54	43-047-30893	Sec. 1 T7S R23E
Walker Hollow Unit #55	43-047-30894	Sec.12 T7S R23E
Walker Hollow Unit #56	43-047-30911	Sec.11 T7S R23E
Walker Hollow Unit #57	43-047-30895	Sec.11 T7S R23E
Walker Hollow Unit #58	43-047-30912	Sec. 2 T7S R23E
Walker Hollow Unit #59	43-047-30946	Sec. 8 T7S R24E
Walker Hollow Unit #60	43-047-30913	Sec.11 T7S R23E
Walker Hollow Unit #62	43-047-30914	Sec.10 T7S R23E
Walker Hollow Unit #63	43-047-30916	Sec. 1 T7S R23E
Walker Hollow Unit #64	43-047-30947	Sec. 6 T7S R24E
Walker Hollow Unit #66	43-047-31131	Sec.10 T7S R23E
Walker Hollow Unit #69	43-047-31665	Sec. 2 T7S R23E
Walker Hollow Unit #72	43-047-31227	Sec. 2 T7S R23E
Walker Hollow Unit #73	43-047-31032	Sec. 3 T7S R23E
Walker Hollow Unit #74	43-047-31031	Sec. 3 T7S R23E
Walker Hollow Unit #75	43-047-31182	Sec. 2 T7S R23E
Walker Hollow Unit #76	43-047-31542	Sec. 1 T7S R23E
Walker Hollow Unit #77	43-047-31563	Sec. 1 T7S R23E
Walker Hollow Unit #78	43-047-31645	Sec. 1 T7S R23E
Walker Hollow Unit #101	43-047-15555	Sec. 7 T7S R24E

United States Department of the Interior

BUREAU OF LAND MANAGEMENT

Utah State Office
P.O. Box 45155
Salt Lake City, Utah 84145-0155

COPY

RECEIVED
APR 27 1995
DIV OF OIL, GAS & MINING

IN REPLY REFER TO:
UT-922

April 26, 1995

Citation 1994 Investment LP
Attn: Christopher E. Cottrell
8223 Willow Place South, Suite 250
Houston, Texas 77070-5623

Re: Walker Hollow (Green River) Unit
Uintah County, Utah

Gentlemen:

We received an indenture dated March 22, 1995, whereby Exxon Company, U.S.A. resigned as Unit Operator and Citation 1994 Investment Limited Partnership was designated as Successor Unit Operator for the Walker Hollow (Green River) Unit, Uintah County, Utah.

This indenture was executed by all required parties and the signatory parties have complied with Sections 5 and 6 of the unit agreement. The instrument is hereby approved effective April 26, 1995.

Your nationwide (Montana) oil and gas bond No. 0630 will be used to cover all operations within the Walker Hollow (Green River) Unit.

It is requested that you notify all interested parties of the change in unit operator. Copies of the approved instruments are being distributed to the appropriate federal offices, with one copy returned herewith.

Sincerely,

/s/ Assad M. Raffoul

for Robert A. Henricks
Chief, Branch of Fluid Minerals

Enclosure
bcc: District Manager - Vernal (w/enclosure)
Division of Oil, Gas & Mining
Division of Lands and Mineral Operations U-923
File - Walker Hollow (GR) Unit (w/enclosure)
MMS - Data Management Division
Agr. Sec. Chron
Fluid Chron
U-922:TAThompson:tt:04-26-95

Division of Oil, Gas and Mining

PHONE CONVERSATION DOCUMENTATION FORM

Route original/copy to:

[] **Well File** _____

(Location) Sec___Twp___Rng___

(API No.) _____

[] **Suspense**

(Return Date) _____

(To - Initials) _____

XXX **Other**

OPER. CHG.

1. Date of Phone Call: 5-2-95 Time: 8:23

2. DOGM Employee (name) L. CORDOVA (Initiated Call XXX)

Talked to:

Name SHARON WARD (Initiated Call [ ]) - Phone No. (713)469-9664

of (Company/Organization) CITATION O&G CORP.

3. Topic of Conversation: OPERATOR OF THE "WALKER HOLLOW (GRRV) UNIT?

BLM APRV CITATION 1994 INVESTMENT LP. IS COMPANY CHANGING NAME FROM CITATION O&G CORP?

4. Highlights of Conversation:

MS. WARD "CITATION" CALLED BLM TO CHANGE APRV'L TO CITATION O&G CORP. NOT CITATION 1994 INVESTMENT LP. PER BLM/SL THE CHANGE SHOULD NOT TAKE LONG.

*BLM/SL - SIMPLE CHANGE, SHOULD ONLY TAKE A COUPLE OF DAYS.

United States Department of the Interior

COPY

BUREAU OF LAND MANAGEMENT
Utah State Office
P.O. Box 45155
Salt Lake City, Utah 84145-0155

MAY 5 1995

IN REPLY REFER TO:
UT-922

May 9, 1995

Citation Oil & Gas Corporation
Attn: Sharon Ward
8223 Willow Place South, Suite 250
Houston, Texas 77070-5623

Re: Walker Hollow (Green River) Unit
Uintah County, Utah

Gentlemen:

We received an indenture dated May 2, 1995, whereby Citation 1994 Investment Limited Partnership resigned as Unit Operator and Citation Oil & Gas Corporation was designated as Successor Unit Operator for the Walker Hollow (Green River) Unit, Uintah County, Utah.

This indenture was executed by all required parties and the signatory parties have complied with Sections 5 and 6 of the unit agreement. The instrument is hereby approved effective May 9, 1995.

Your nationwide (Montana) oil and gas bond No. 0630 will be used to cover all operations within the Walker Hollow (Green River) Unit.

It is requested that you notify all interested parties of the change in unit operator. Copies of the approved instruments are being distributed to the appropriate federal offices, with one copy returned herewith.

Sincerely,

/s/ Robert A. Henricks

Robert A. Henricks
Chief, Branch of Fluid Minerals

Enclosure
bcc: District Manager - Vernal (w/enclosure)
Division of Oil, Gas & Mining
Division of Lands and Mineral Operations U-923
File - Walker Hollow (GR) Unit (w/enclosure)
MMS - Data Management Division
Agr. Sec. Chron
Fluid Chron
U-922:TAThompson:tt:05-09-95

Division of Oil, Gas and Mining
OPERATOR CHANGE WORKSHEET

Routing:

1-LEC ✓	7-GIL
2-LWP ✓	7-PL
3-DTS	8-SJ
4-VLC ✓	9-FILE
5-RJF ✓	
6-LWP ✓	

Attach all documentation received by the division regarding this change.
Initial each listed item when completed. Write N/A if item is not applicable.

XXX Change of Operator (well sold) ☐ Designation of Agent
☐ Designation of Operator ☐ Operator Name Change Only

The operator of the well(s) listed below has changed (EFFECTIVE DATE: 4-1-95)

TO (new operator) CITATION OIL & GAS CORP
(address) 8223 WILLOW PL S #250
HOUSTON TX 77070-5623
SHARON WARD
phone (713) 469-9664
account no. N 0265

FROM (former operator) EXXON CORPORATION
(address) PO BOX 4721
HOUSTON TX 77210-4721
STEPHEN JOHNSON/MIDLAND
phone (915) 688-7875
account no. N 0420

Well(s) (attach additional page if needed): *WALKER HOLLOW (GREEN RIVER) UNIT

Name:	API:	Entity:	Sec	Twp	Rng	Lease Type:
SEE ATTACHED	047-31227					

OPERATOR CHANGE DOCUMENTATION

Lec 1. (Rule R615-8-10) Sundry or other legal documentation has been received from former operator (Attach to this form). (Rec'd 3-27-95)

Lec 2. (Rule R615-8-10) Sundry or other legal documentation has been received from new operator (Attach to this form). (Rec'd 4-5-95) (Rec'd 4-6-95) (Rec'd 4-10-95)

N/A 3. The Department of Commerce has been contacted if the new operator above is not currently operating any wells in Utah. Is company registered with the state? (yes/no) _____ If yes, show company file number: _____.

Lec 4. **(For Indian and Federal Wells ONLY)** The BLM has been contacted regarding this change (attach Telephone Documentation Form to this report). Make note of BLM status in comments section of this form. Management review of **Federal and Indian** well operator changes should take place prior to completion of steps 5 through 9 below.

Lec 5. Changes have been entered in the Oil and Gas Information System (Wang/IBM) for each well listed above. (5-2-95)

LWP 6. Cardex file has been updated for each well listed above. 5-8-95

LWP 7. Well file labels have been updated for each well listed above. 5-8-95

Lec 8. Changes have been included on the monthly "Operator, Address, and Account Changes" memo for distribution to State Lands and the Tax Commission. (5-2-95)

Lec 9. A folder has been set up for the Operator Change file, and a copy of this page has been placed there for reference during routing and processing of the original documents.

– OVER –

OPERATOR CHANGE WORKSHEET (CONTINUED) Initial each item when completed. Write N/A if item is not applicable.

ENTITY REVIEW

✓ 1. (Rule R615-8-7) Entity assignments have been reviewed for all wells listed above. Were entity changes made? (yes/no) ____ (If entity assignments were changed, attach copies of Form 6, Entity Action Form).

N/A 2. State Lands and the Tax Commission have been notified through normal procedures of entity changes.

BOND VERIFICATION (~~Fee wells only~~) #950308 Trust Lands Admin. Surety #587806 / 80,000 Gulf Ins. Co.

✓ 1. (Rule R615-3-1) The new operator of any fee lease well listed above has furnished a proper bond.

N/A 2. A copy of this form has been placed in the new and former operators' bond files.

N/A 3. The former operator has requested a release of liability from their bond (yes/no) ___. Today's date _____ 19___. If yes, division response was made by letter dated _____ 19___.

LEASE INTEREST OWNER NOTIFICATION RESPONSIBILITY

n/a 1. (Rule R615-2-10) The former operator/lessee of any **fee lease** well listed above has been notified by letter dated _____ 19___, of their responsibility to notify any person with an interest in such lease of the change of operator. Documentation of such notification has been requested.

DTS 5/10/95

n/a 2. Copies of documents have been sent to State Lands for changes involving **State leases**.

FILMING

✓ 1. All attachments to this form have been microfilmed. Date: May 18 1995.

FILING

___ 1. Copies of all attachments to this form have been filed in each well file.

___ 2. The original of this form and the original attachments have been filed in the Operator Change file.

COMMENTS

950329 Exxon / Steve Johnson "Req. UIC F5"

950406 Rec'd UIC F5 "Old Form".

950426 BLM Aprv. "Citation 1994 Investment L.P."

950502 Unit oper. nm. chg. from "Citation 1994 Investment L.P." to "Citation O&G Corp." in progress. (see phone DOC.)

WE71/34-35

Form 3160- 5
(April 2004)

UNITED STATES
DEPARTMENT OF THE INTERIOR
BUREAU OF LAND MANAGEMENT

FORM APPROVED
OMB No. 1004- 0137
Expires: March 31, 2007

SUNDRY NOTICES AND REPORTS ON WELLS

Do not use this form for proposals to drill or to re-enter an abandoned well. Use Form 3160-3 (APD) for such proposals.

SUBMIT IN TRIPLICATE - Other Instructions on reverse side.

5. Lease Serial No. ML-3175
6. If Indian, Allottee, or Tribe Name
7. If Unit or CA. Agreement Name and/or No.
8. Well Name and No. Walker Hollow Unit #72
9. API Well No. 43-047-31227
10. Field and Pool, or Exploratory Area Walker Hollow Green River
11. County or Parish, State Uintah, UT

1. Type of Well
[X] Oil Well [ ] Gas Well [ ] Other

2. Name of Operator
Citation Oil & Gas Corp.

3a. Address
P.O. Box 690688, Houston, TX 77269-0688

3b. Phone No. *(include area code)*
(281) 517-7194

4. Location of Well *(Footage, Sec., T., R., M., or Survey Description)*
SW NW Sec. 2 7S 23E 3227 FSL 503 FWL

12. CHECK APPROPRIATE BOX(S) TO INDICATE NATURE OF NOTICE, REPORT, OR OTHER DATA

TYPE OF SUBMISSION	TYPE OF ACTION			
[X] Notice of Intent	[ ] Acidize	[ ] Deepen	[ ] Production (Start/ Resume)	[ ] Water Shut-off
	[ ] Altering Casing	[ ] Fracture Treat	[ ] Reclamation	[ ] Well Integrity
[ ] Subsequent Report	[ ] Casing Repair	[ ] New Construction	[ ] Recomplete	[X] Other
	[ ] Change Plans	[ ] Plug and abandon	[ ] Temporarily Abandon	
[ ] Final Abandonment Notice	[ ] Convert to Injection	[ ] Plug back	[ ] Water Disposal	

13. Describe Proposed or Completed Operation (clearly state all pertinent details including estimated starting date of any proposed work and approximate duration thereof. If the proposal is to deepen directionally or recomplete horizontally, give subsurface locations and measured and true vertical depths or pertinent markers and sands. Attach the Bond under which the work will performed or provide the Bond No. on file with the BLM/ BIA. Required subsequent reports shall be filed within 30 days following completion of the involved operations. If the operation results in a multiple completion or recompletion in a new interval, a Form 3160-4 shall be filed once testing has been completed. Final Abandonment Notice shall be filed only after all requirements, including reclamantion, have been completed, and the operator has determined that the site is ready for final inspection.)

Citation Oil & Gas Corp. requests permission to identify and isolate the water production and return the well to production. Also, test the 8d formation for productivity. If we are unable to isolate the water, this well may be utilized for water ~~production~~. Please see attached procedure.
injection

COPY SENT TO OPERATOR
Date: 12-1-05
Initials: CHD

APPROVED BY THE STATE OF UTAH DIVISION OF OIL, GAS, AND MINING
DATE: 11/30/05
BY: [signature]
* An application for injection would have to be submitted and approved prior to enter injection

14. I hereby certify that the foregoing is true and correct.

Name *(Printed/ Typed)* Bridget Lisenbe
Title Regulatory Assistant
Signature Bridget Lisenbe
Date 11/21/2005

THIS SPACE FOR FEDERAL OR STATE OFFICE USE

Approved by
Title
Date
Conditions of approval, if any are attached. Approval of this notice does not warrant or certify that the applicant holds legal or equitable title to those rights in the subject lease which would entitle the applicant to conduct operations thereon.
Office

Title 18 U.S.C. Section 1001 AND Title 43 U.S.C. Section 1212, make it a crime for any person knowingly and willfully to make any department or agency of the United States any false, fictitiousor fraudulent statements or representations as to any matter within its jurisdiction.

(Instructions on page 2)

RECEIVED
NOV 2 8 2005
DIV. OF OIL, GAS & MINING

Walker Hollow Unit #72
November 17, 2005

Work-over Procedure:

Objective: Identify and isolate the water production and return the well to production. Also test the 8d formation for productivity. If we are unable to isolate the water, this well may be utilized for water injection.

Comments:
1. Hot oil as necessary to continue work.
2. Last failure pump change 6/05.
3. This well may be a water injection candidate.
4. Well currently making 2 bopd and 335 bwpd.

1. MIRUSU. Unseat pump and TOOH w/ rods and pump.

2. ND Tree. NU 3M BOP's. Release TAC. TOOH w/ 2-7/8" tubing, standing back.

3. RIH with bit and scraper and clean out to PBTD at 5727'.

4. RU Weatherford. RIH w/ 3 1/8" 23g charges and perf 8d interval 5572 – 5584' (9/82 CNFD) 2 spf (25 shots). RD Weatherford.

5. TIH w/pkr and RBP. Set RBP at 5590. Set packer at 5550' to isolate the 8d perfs.

6. Swab test 8d interval. Report results to Chad Stallard (713-249-4671)

7. RU BJ and acidize perfs with 1500 gal 15% HCL. Utilize 7.5% HCL pickle ahead of acid job. (Would like to have the acid job heated to keep from placing cold fluid in contact with formation)

8. Swab test 8d interval. Report results to Chad Stallard (713-249-4671)

9. POOH w/pkr and RBP.

10. TIH with tubing and set packer at 5550' to isolate up-hole perfs'. Set SN at 5600'.

11. ND BOP's. NU tree.

12. TIH w/rods and pump and hang well on. RDMOSU.

13. Return well to production and place on test.

STATE OF UTAH
DEPARTMENT OF NATURAL RESOURCES
DIVISION OF OIL, GAS AND MINING

FORM 9

5. LEASE DESIGNATION AND SERIAL NUMBER: ML 3175

SUNDRY NOTICES AND REPORTS ON WELLS

6. IF INDIAN, ALLOTTEE OR TRIBE NAME:

Do not use this form for proposals to drill new wells, significantly deepen existing wells below current bottom-hole depth, reenter plugged wells, or to drill horizontal laterals. Use APPLICATION FOR PERMIT TO DRILL form for such proposals.

7. UNIT or CA AGREEMENT NAME: Walker Hollow Unit

1. TYPE OF WELL: OIL WELL ☑ GAS WELL ☐ OTHER

8. WELL NAME and NUMBER: Walker Hollow Unit #72

2. NAME OF OPERATOR: Citation Oil & Gas Corp.

9. API NUMBER: 4304731227

3. ADDRESS OF OPERATOR: P O Box 690688 CITY Houston STATE TX ZIP 77269

PHONE NUMBER: (281) 517-7800

10. FIELD AND POOL, OR WILDCAT: Walker Hollow Green River

4. LOCATION OF WELL

FOOTAGES AT SURFACE: 3227' FSL & 503' FWL

COUNTY: Uintah

QTR/QTR, SECTION, TOWNSHIP, RANGE, MERIDIAN: SWNW 2 7S 23E

STATE: UTAH

11. CHECK APPROPRIATE BOXES TO INDICATE NATURE OF NOTICE, REPORT, OR OTHER DATA

TYPE OF SUBMISSION	TYPE OF ACTION		
☐ NOTICE OF INTENT (Submit in Duplicate)	☐ ACIDIZE	☐ DEEPEN	☐ REPERFORATE CURRENT FORMATION
Approximate date work will start:	☐ ALTER CASING	☐ FRACTURE TREAT	☐ SIDETRACK TO REPAIR WELL
	☐ CASING REPAIR	☐ NEW CONSTRUCTION	☐ TEMPORARILY ABANDON
	☐ CHANGE TO PREVIOUS PLANS	☐ OPERATOR CHANGE	☐ TUBING REPAIR
	☐ CHANGE TUBING	☐ PLUG AND ABANDON	☐ VENT OR FLARE
☑ SUBSEQUENT REPORT (Submit Original Form Only)	☐ CHANGE WELL NAME	☐ PLUG BACK	☐ WATER DISPOSAL
Date of work completion:	☐ CHANGE WELL STATUS	☐ PRODUCTION (START/RESUME)	☐ WATER SHUT-OFF
	☐ COMMINGLE PRODUCING FORMATIONS	☐ RECLAMATION OF WELL SITE	☑ OTHER: Identify & isolate wtr production
	☐ CONVERT WELL TYPE	☐ RECOMPLETE - DIFFERENT FORMATION	

12. DESCRIBE PROPOSED OR COMPLETED OPERATIONS. Clearly show all pertinent details including dates, depths, volumes, etc.

Citation filed an intent sundry on November 21, 2005 to identify and isolate water production we are filing this subsequent sundry to notify the commission that the work over was never done. Citation has filed to convert this well to injection with the state and EPA. We are currently waiting on approval from the EPA to convert.

NAME (PLEASE PRINT) Sharon Ward TITLE Permitting Manager

SIGNATURE Sharon Ward DATE 4/3/2007

(This space for State use only)

RECEIVED
APR 03 2007
DIV. OF OIL, GAS & MINING

(5/2000) (See Instructions on Reverse Side)

FORM 9

STATE OF UTAH
DEPARTMENT OF NATURAL RESOURCES
DIVISION OF OIL, GAS AND MINING

5. LEASE DESIGNATION AND SERIAL NUMBER: ML 3175

SUNDRY NOTICES AND REPORTS ON WELLS

6. IF INDIAN, ALLOTTEE OR TRIBE NAME:

Do not use this form for proposals to drill new wells, significantly deepen existing wells below current bottom-hole depth, reenter plugged wells, or to drill horizontal laterals. Use APPLICATION FOR PERMIT TO DRILL form for such proposals.

7. UNIT or CA AGREEMENT NAME: Walker Hollow Unit

1. TYPE OF WELL: OIL WELL ☐ GAS WELL ☐ OTHER Conversion to injection

8. WELL NAME and NUMBER: Walker Hollow Unit 72

2. NAME OF OPERATOR: Citation Oil & Gas Corp.

9. API NUMBER: 4304731227

3. ADDRESS OF OPERATOR: P O Box 690688 CITY Houston STATE TX ZIP 77260

PHONE NUMBER: (281) 517-7800

10. FIELD AND POOL, OR WILDCAT: Walker Hollow Green River

4. LOCATION OF WELL

FOOTAGES AT SURFACE: 3227' FSL & 503' FWL

COUNTY: Uintah

QTR/QTR, SECTION, TOWNSHIP, RANGE, MERIDIAN: SWNW 2 7S 23E

STATE: UTAH

11. CHECK APPROPRIATE BOXES TO INDICATE NATURE OF NOTICE, REPORT, OR OTHER DATA

TYPE OF SUBMISSION	TYPE OF ACTION		
☑ NOTICE OF INTENT (Submit in Duplicate)	☐ ACIDIZE	☐ DEEPEN	☐ REPERFORATE CURRENT FORMATION
Approximate date work will start:	☐ ALTER CASING	☐ FRACTURE TREAT	☐ SIDETRACK TO REPAIR WELL
	☐ CASING REPAIR	☐ NEW CONSTRUCTION	☐ TEMPORARILY ABANDON
	☐ CHANGE TO PREVIOUS PLANS	☐ OPERATOR CHANGE	☐ TUBING REPAIR
	☐ CHANGE TUBING	☐ PLUG AND ABANDON	☐ VENT OR FLARE
☐ SUBSEQUENT REPORT (Submit Original Form Only)	☐ CHANGE WELL NAME	☐ PLUG BACK	☑ WATER DISPOSAL
Date of work completion:	☐ CHANGE WELL STATUS	☐ PRODUCTION (START/RESUME)	☐ WATER SHUT-OFF
	☐ COMMINGLE PRODUCING FORMATIONS	☐ RECLAMATION OF WELL SITE	☐ OTHER:
	☑ CONVERT WELL TYPE	☐ RECOMPLETE - DIFFERENT FORMATION	

12. DESCRIBE PROPOSED OR COMPLETED OPERATIONS. Clearly show all pertinent details including dates, depths, volumes, etc.

Citation Oil & Gas Corp. plans to convert the Walker Hollow Unit 72 to injection upon EPA approval with attached procedure. Application was submitted to state and EPA in January of 2006. EPA approval is anticipated this year.

Accepted by the
Utah Division of
Oil, Gas and Mining
FOR RECORD ONLY

NAME (PLEASE PRINT) Sharon Ward TITLE Permitting Manager

SIGNATURE Sharon Ward DATE 2/19/2008

(This space for State use only)

RECEIVED
FEB 25 2008
DIV. OF OIL, GAS & MINING

(5/2000) (See Instructions on Reverse Side)

Walker Hollow Unit #72

Work-over Procedure:

Objective: Convert well to injection service.

Comments: 1. Hot oil as necessary to continue work.
2. Last failure pump change 6/05.

1. MIRUSU. Unseat pump and POOH with pump and rods.

2. ND Tree. NU 3M BOP's. Release TAC and POOH with 2 7/8" tubing.

3. PU work-string and round trip bit and scraper to 5727'. PBTD

4. PU and RIH with 2 7/8" IPC tubing and BHA to 5100'.

5. Circulate hole with 9 ppg clean fluid.

6. Set R-3 packer at 5100' and snap set packer at 4850'.

7. ND BOP's and NU Tree.

8. Perform MIT to 1200 psi.

9. Hook up flow line and wait on EPA approval to begin water injection.

10. After injection has stabilized, approximately two months, contact engineer to set up Injection Profile.

List of Citation Contacts

Foreman	Robert Eye	Cell:	435.790.4406	Home: 435.781.4147
Engineer	Chad Stallard	Cell:	713.249.4671	Office: 281-517-7527

CITATION OIL & GAS CORP.
WALKER HOLLOW UNIT #72
3270' FSL, 500' FWL, Section 2-7S-3E
UINTAH CO., UTAH
Proposed Injection

KB: 15 FT
GL: 5339

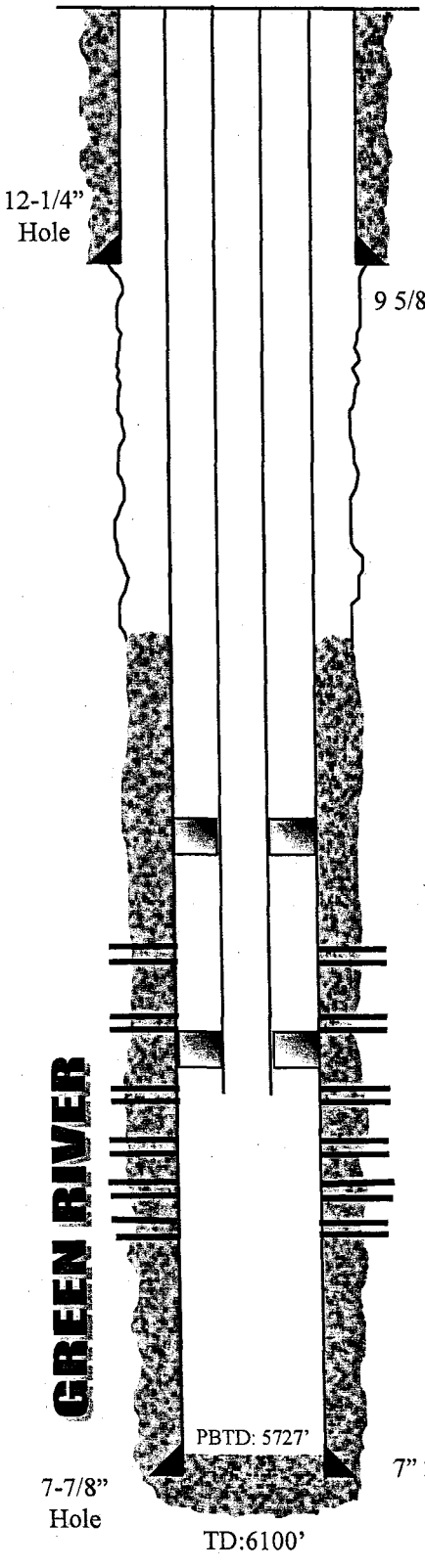

9 5/8" 36# K-55 @ 420'

Snap Set packer at 4850'

Upper Green River

5a 4902' – 4922' 4JSPF (Compl & Acid 11/82)
5a2 4964' – 4970' 4JSPF (Compl & Acid 11/82)
5b 4980' – 5000' 4JSPF (Compl & Acid 11/82)
R-3 packer at 5100'
8a 5406' – 5418' 2 JSPF (Compl & Acid & SQZ 11/82)
8b 5474' – 5484' & 5488' – 5498' 2 JSPF (Compl & Acid & SQZ 11/82)
8c 5508' – 5516' 5518' – 5528' & 5530' – 5538' 2 JSPF (Compl & Acid: 11/82, Frac'd 11/82)
DL1a 5600' – 5624' 2 JSPF (Compl & Acid: 11/82, Frac'd 11/82)

7" 20 & 23# @ 5781'

Updated: 11/29/05 - CSS

UIC FORM 1

STATE OF UTAH
DEPARTMENT OF NATURAL RESOURCES
DIVISION OF OIL, GAS AND MINING

APPLICATION FOR INJECTION WELL

Name of Operator Citation Oil & Gas Corp.	Utah Account Number N	Well Name and Number Walker Hollow Unit 72
Address of Operator P O Box 690688 CITY Houston STATE TX ZIP 77269	Phone Number (281) 517-7309	API Number 4304731227
Location of Well Footage : 3227' FSL & 503' FWL County : Uintah QQ, Section, Township, Range: SWNW 2 7S 23E State : UTAH		Field or Unit Name Walker Hollow Green River Lease Designation and Number ML-3175

Is this application for expansion of an existing project?	Yes ☑	No ☐
Will the proposed well be used for: Enhanced Recovery?	Yes ☑	No ☐
Disposal?	Yes ☐	No ☐
Storage?	Yes ☐	No ☐
Is this application for a new well to be drilled?	Yes ☐	No ☑
If this application is for an existing well, has a casing test been performed?	Yes ☐	No ☑
Date of test: _____		

Proposed injection interval: from 4,902 to 5,624

Proposed maximum injection: rate 1,000 bpd pressure 1,144 psig

Proposed injection zone contains oil ☑, gas ☑, and / or fresh water ☐ within ½ mile of the well.

List of attachments: EPA Permit

ATTACH ADDITIONAL INFORMATION AS REQUIRED BY CURRENT UTAH OIL AND GAS CONSERVATION GENERAL RULES

I hereby certify that this report is true and complete to the best of my knowledge.

Name (Please Print) Sharon Ward Title Permitting Manager

Signature Sharon Ward Date 1/5/2006

(5/2002)

JON M. HUNTSMAN, JR.
Governor

GARY R. HERBERT
Lieutenant Governor

State of Utah
DEPARTMENT OF NATURAL RESOURCES

MICHAEL R. STYLER
Executive Director

Division of Oil, Gas and Mining

JOHN R. BAZA
Division Director

July 28, 2008

CERTIFIED MAIL NO.: 7004 2510 0004 1824 5759

43 047 31227
Walker Hollow 72
7S 23E 2

Debra Harris
Citation Oil & Gas Corp
P.O. Box 690688
Houston, TX 77269-0688

Re: Extended Shut-in and Temporarily Abandoned Well Requirements for Fee or State Leases

Dear Ms. Harris:

As of July 2008, Citation Oil & Gas Corporation has one (1) Fee Lease Well and one (1) Mineral Lease Well (see Attachment A) currently in non-compliance with the requirements for extended shut-in or temporarily abandoned (SI/TA) status. Based on previous correspondence, the Bingham 10-1 well was to be recompleted and put back on production. To date nothing appears to have been done on this well.

Wells SI/TA beyond twelve (12) consecutive months requires filing a Sundry Notice (R649-3-36-1). Wells with five (5) years non-activity or non-productivity shall be plugged, unless the Division grants approval for extended shut-in time upon a showing of good cause by the operator (649-3-36-1.3.3). For extended SI/TA consideration the operator shall provide the Utah Division of Oil, Gas & Mining with the following:

1. Reasons for SI/TA of the well (R649-3-36-1.1).
2. The length of time the well is expected to be SI/TA (R649-3-36-1.2), and
3. An explanation and supporting data if necessary, for showing the well has integrity, meaning that the casing, cement, equipment condition, static fluid level, pressure, existence or absence of Underground Sources of Drinking Water and other factors do not make the well a risk to public health and safety or the environment (R649-3-36-1.3).

1594 West North Temple, Suite 1210, PO Box 145801, Salt Lake City, UT 84114-5801
telephone (801) 538-5340 • facsimile (801) 359-3940 • TTY (801) 538-7458 • *www.ogm.utah.gov*

UTAH DNR OIL, GAS & MINING

Submitting the information suggested below may help show well integrity and may help qualify your well for extended SI/TA. **Note: As of July 1, 2003, wells in violation of the SI/TA rule R649-3-36 may be subject to full cost bonding (R649-3-1-4.2, 4.3).**

1. Wellbore diagram, and
2. Copy of recent casing pressure test, and
3. Current pressures on the wellbore (tubing pressure, casing pressure, and casing/casing annuli pressure) showing wellbore has integrity, and
4. Fluid level in the wellbore, and
5. An explanation of how the submitted information proves integrity.

If the required information is not received within 30 days of the date of this notice, further actions will be initiated. If you have any questions concerning this matter, please contact me at (801) 538-5281.

Sincerely,

Dustin K. Doucet
Petroleum Engineer

JP/js
Enclosure

cc: Jim Davis, SITLA
Well Files
Compliance File

ATTACHMENT A

	Well Name	API	Lease Type	Years Inactive
1	Bingham 10-1	43-043-30025	Fee	10 Years 2 Months
2	Walker Hollow 72	43-047-31227	ML-3175	1 Years 8 Months

UIC FORM 1

STATE OF UTAH
DEPARTMENT OF NATURAL RESOURCES
DIVISION OF OIL, GAS AND MINING

APPLICATION FOR INJECTION WELL

Name of Operator Citation Oil & Gas Corp.	Utah Account Number N	Well Name and Number Walker Hollow Unit 72
Address of Operator P O Box 690688 CITY Houston STATE TX ZIP 77269	Phone Number (281) 517-7309	API Number 4304731227
Location of Well Footage : 3227' FSL & 503' FWL County : Uintah QQ, Section, Township, Range: SWNW 2 7S 23E State : UTAH		Field or Unit Name Walker Hollow Green River Lease Designation and Number ML-3175

Is this application for expansion of an existing project?	Yes ☑	No ☐
Will the proposed well be used for: Enhanced Recovery?	Yes ☑	No ☐
Disposal?	Yes ☐	No ☐
Storage?	Yes ☐	No ☐
Is this application for a new well to be drilled?	Yes ☐	No ☑
If this application is for an existing well, has a casing test been performed?	Yes ☐	No ☑

Date of test: _____

Proposed injection interval: from 4,902 to 5,624

Proposed maximum injection: rate 1,000 bpd pressure 1,144 psig

Proposed injection zone contains oil ☑, gas ☑, and / or fresh water ☐ within ½ mile of the well.

List of attachments: EPA Permit

ATTACH ADDITIONAL INFORMATION AS REQUIRED BY CURRENT
UTAH OIL AND GAS CONSERVATION GENERAL RULES

I hereby certify that this report is true and complete to the best of my knowledge.

Name (Please Print) Sharon Ward Title Permitting Manager

Signature Sharon Ward Date 1/5/2006

(5/2002)

FORM 9

STATE OF UTAH
DEPARTMENT OF NATURAL RESOURCES
DIVISION OF OIL, GAS AND MINING

5. LEASE DESIGNATION AND SERIAL NUMBER: ML 3175

SUNDRY NOTICES AND REPORTS ON WELLS

6. IF INDIAN, ALLOTTEE OR TRIBE NAME:

Do not use this form for proposals to drill new wells, significantly deepen existing wells below current bottom-hole depth, reenter plugged wells, or to drill horizontal laterals. Use APPLICATION FOR PERMIT TO DRILL form for such proposals.

7. UNIT or CA AGREEMENT NAME: Walker Hollow Unit

1. TYPE OF WELL: OIL WELL ☐ GAS WELL ☐ OTHER Conversion to injection

8. WELL NAME and NUMBER: Walker Hollow Unit 72

2. NAME OF OPERATOR: Citation Oil & Gas Corp.

9. API NUMBER: 4304731227

3. ADDRESS OF OPERATOR: P O Box 690688 CITY Houston STATE TX ZIP 77260

PHONE NUMBER: (281) 517-7800

10. FIELD AND POOL, OR WILDCAT: Walker Hollow Green River

4. LOCATION OF WELL

FOOTAGES AT SURFACE: 3227' FSL & 503' FWL

COUNTY: Uintah

QTR/QTR, SECTION, TOWNSHIP, RANGE, MERIDIAN: SWNW 2 7S 23E

STATE: UTAH

11. CHECK APPROPRIATE BOXES TO INDICATE NATURE OF NOTICE, REPORT, OR OTHER DATA

TYPE OF SUBMISSION	TYPE OF ACTION		
☑ NOTICE OF INTENT (Submit in Duplicate)	☐ ACIDIZE	☐ DEEPEN	☐ REPERFORATE CURRENT FORMATION
Approximate date work will start:	☐ ALTER CASING	☐ FRACTURE TREAT	☐ SIDETRACK TO REPAIR WELL
	☐ CASING REPAIR	☐ NEW CONSTRUCTION	☐ TEMPORARILY ABANDON
	☐ CHANGE TO PREVIOUS PLANS	☐ OPERATOR CHANGE	☐ TUBING REPAIR
	☐ CHANGE TUBING	☐ PLUG AND ABANDON	☐ VENT OR FLARE
☐ SUBSEQUENT REPORT (Submit Original Form Only)	☐ CHANGE WELL NAME	☐ PLUG BACK	☑ WATER DISPOSAL
Date of work completion:	☐ CHANGE WELL STATUS	☐ PRODUCTION (START/RESUME)	☐ WATER SHUT-OFF
	☐ COMMINGLE PRODUCING FORMATIONS	☐ RECLAMATION OF WELL SITE	☐ OTHER:
	☑ CONVERT WELL TYPE	☐ RECOMPLETE - DIFFERENT FORMATION	

12. DESCRIBE PROPOSED OR COMPLETED OPERATIONS. Clearly show all pertinent details including dates, depths, volumes, etc.

Citation Oil & Gas Corp. plans to convert the Walker Hollow Unit 72 to injection upon EPA approval with attached procedure. Application was submitted to state and EPA in January of 2006. EPA approval is anticipated this year.

NAME (PLEASE PRINT) Sharon Ward TITLE Permitting Manager

SIGNATURE Sharon Ward DATE 2/19/2008

(This space for State use only)

Walker Hollow Unit #72

Work-over Procedure:

Objective: Convert well to injection service.

Comments: 1. Hot oil as necessary to continue work.
2. Last failure pump change 6/05.

1. MIRUSU. Unseat pump and POOH with pump and rods.
2. ND Tree. NU 3M BOP's. Release TAC and POOH with 2 7/8" tubing.
3. PU work-string and round trip bit and scraper to 5727'. PBTD
4. PU and RIH with 2 7/8" IPC tubing and BHA to 5100'.
5. Circulate hole with 9 ppg clean fluid.
6. Set R-3 packer at 5100' and snap set packer at 4850'.
7. ND BOP's and NU Tree.
8. Perform MIT to 1200 psi.
9. Hook up flow line and wait on EPA approval to begin water injection.
10. After injection has stabilized, approximately two months, contact engineer to set up Injection Profile.

List of Citation Contacts

Foreman	Robert Eye	Cell:	435.790.4406	Home: 435.781.4147
Engineer	Chad Stallard	Cell:	713.249.4671	Office: 281-517-7527

CITATION OIL & GAS CORP.
WALKER HOLLOW UNIT #72
3270' FSL, 500' FWL, Section 2-7S-3E
UINTAH CO., UTAH
Proposed Injection

KB: 15 FT
GL: 5339

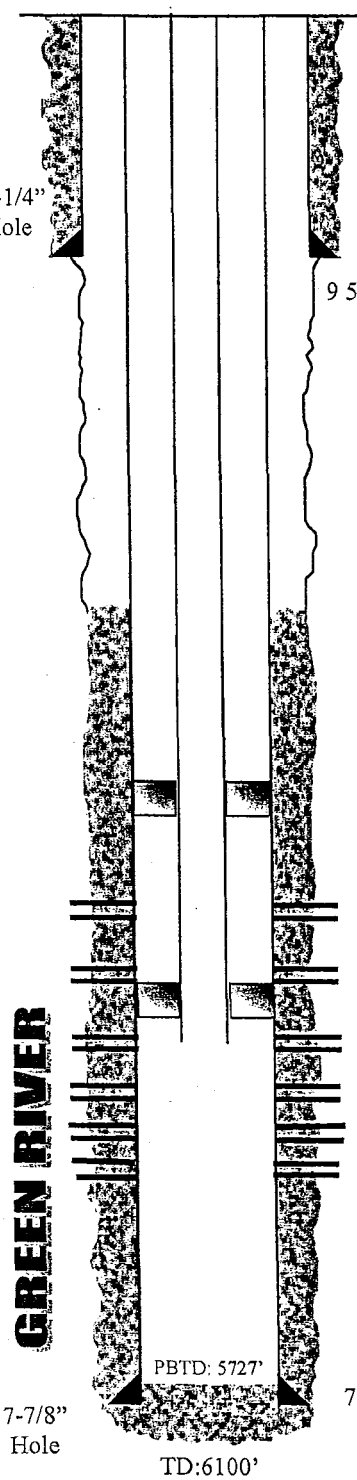

9 5/8" 36# K-55 @ 420'

Snap Set packer at 4850'

Upper Green River

5a 4902' – 4922' 4JSPF (Compl & Acid 11/82)
5a2 4964' – 4970' 4JSPF (Compl & Acid 11/82)
5b 4980' – 5000' 4JSPF (Compl & Acid 11/82)
R-3 packer at 5100'
8a 5406' – 5418' 2 JSPF (Compl & Acid & SQZ 11/82)
8b 5474' – 5484' & 5488' – 5498' 2 JSPF (Compl & Acid & SQZ 11/82)
8c 5508' – 5516' 5518' – 5528' & 5530' – 5538' 2 JSPF (Compl & Acid: 11/82, Frac'd 11/82)
DL1a 5600' – 5624' 2 JSPF (Compl & Acid: 11/82, Frac'd 11/82)

7" 20 & 23# @ 5781'

Updated: 11/29/05 - CSS

UNITED STATES ENVIRONMENTAL PROTECTION AGENCY
REGION 8
1595 Wynkoop Street
DENVER, CO 80202-1129
Phone 800-227-8917
http://www.epa.gov/region08

JUN 2 6 2008

Ref: 8P-W-GW

CERTIFIED MAIL
RETURN RECEIPT REQUESTED

Sharon Ward
Citation Oil and Gas Corporation
P.O. Box 690688
Houston, TX 77269-0688

Re: FINAL Permit
UIC Permits: UT21118-07600 &
UT21119-07601
Wells: Walker Hollow Unit 87 &
Walker Hollow Unit 72
Uintah County, UT

Dear Ms. Ward:

Enclosed are your copies of the FINAL Underground Injection Control (UIC) Permits for the proposed Walker Hollow Unit 87 and Walker Hollow Unit 72 injection wells. The Statement of Bases that discuss the conditions and requirements of these EPA UIC Permits are also included.

The Public Comment period for these Permits ended on June 26, 2008. No comments on the Draft Permits were received during the Public Notice period; therefore the Effective Dates for these EPA UIC Permits are the dates of issuance. All conditions set forth herein refer to Title 40 Parts 124, 144, 146, and 147 of the Code of Federal Regulations (CFR) and are regulations that are in effect as of the Effective Date of these Permits.

Please note that under the terms and conditions of these Final Permits you are authorized only to construct the proposed injection wells. Prior to commencing injection, you first must fulfill all "Prior to Commencing Injection" requirements of the Final Permits, Part II Section C Subpart 1, and obtain written Authorization to Inject from the EPA. It is your responsibility to be familiar with and to comply with all provisions of these Final Permits.

These EPA UIC Permits are issued for the operating life of the wells unless terminated (Part III, Section B). The EPA may review these Permits at least every five (5) years to determine whether any action is warranted pursuant to 40 CFR § 144.36(a).

If you have any questions on the enclosed Final Permits or Statement of Bases, please call Wendy Cheung of my staff at (303) 312-6242, or toll-free at (800) 227-8917, ext. 312-6242.

Sincerely,

for Stephen S. Tuber
Assistant Regional Administrator
Office of Partnerships and Regulatory Assistance

enclosures:
Final UIC Permits
Statement of Bases
Form 7520-7 Application to Transfer Permit
Form 7520-11 Monitoring Report
Form 7520-14 Plugging Plan
Form 7520-12 Well Rework Record
Groundwater Section Guidance 34
Groundwater Section Guidance 35
Groundwater Section Guidance 37
Groundwater Section Guidance 39

EPA

UNDERGROUND INJECTION CONTROL PROGRAM

PERMIT

PREPARED: December 2007

Permit No. UT21119-07601

Class II Enhanced Oil Recovery Injection Well

Walker Hollow Unit 72
Uintah County, UT

Issued To

Citation Oil Gas Corporation
8223 Willow Place South
Suite 250
Houston, TX 77070

PART I. AUTHORIZATION TO CONSTRUCT AND OPERATE 2

PART II. SPECIFIC PERMIT CONDITIONS 3

Section A. WELL CONSTRUCTION REQUIREMENTS 3

1. Casing and Cement. 3
2. Injection Tubing and Packer. 3
3. Sampling and Monitoring Devices. 3
4. Well Logging and Testing 4
5. Postponement of Construction or Conversion 4
6. Workovers and Alterations 4

Section B. MECHANICAL INTEGRITY 4

1. Demonstration of Mechanical Integrity (MI). 5
2. Mechanical Integrity Test Methods and Criteria 5
3. Notification Prior to Testing. 5
4. Loss of Mechanical Integrity. 5

Section C. WELL OPERATION 6

1. Requirements Prior to Commencing Injection. 6
2. Injection Interval. 6
3. Injection Pressure Limitation 6
4. Injection Volume Limitation. 7
5. Injection Fluid Limitation. 7
6. Tubing-Casing Annulus (TCA) 7

Section D. MONITORING, RECORDKEEPING, AND REPORTING OF RESULTS 7

1. Monitoring Parameters, Frequency, Records and Reports. 7
2. Monitoring Methods. 7
3. Records Retention. 8
4. Annual Reports. 8

Section E. PLUGGING AND ABANDONMENT 9

1. Notification of Well Abandonment, Conversion or Closure. 9
2. Well Plugging Requirements 9
3. Approved Plugging and Abandonment Plan. 9
4. Forty Five (45) Day Notice of Plugging and Abandonment. 9
5. Plugging and Abandonment Report. 9
6. Inactive Wells. 10

PART III. CONDITIONS APPLICABLE TO ALL PERMITS 11

Section A. EFFECT OF PERMIT 11

Section B. CHANGES TO PERMIT CONDITIONS 11

1. Modification, Reissuance, or Termination. 11
2. Conversions. 11
3. Transfer of Permit. 11
4. Permittee Change of Address. 12
5. Construction Changes, Workovers, Logging and Testing Data 12

Section C. SEVERABILITY 12

Section D. CONFIDENTIALITY 12

Section E. GENERAL PERMIT REQUIREMENTS 12

1. Duty to Comply. 12
2. Duty to Reapply. 13
3. Need to Halt or Reduce Activity Not a Defense. 13
4. Duty to Mitigate. 13
5. Proper Operation and Maintenance. 13
6. Permit Actions. 13
7. Property Rights. 13
8. Duty to Provide Information. 13
9. Inspection and Entry. 13
10. Signatory Requirements. 14
11. Reporting Requirements. 14

Section F. FINANCIAL RESPONSIBILITY 15

1. Method of Providing Financial Responsibility. 15
2. Insolvency. 15

APPENDIX A - WELL CONSTRUCTION REQUIREMENTS A-1

APPENDIX B - LOGGING AND TESTING REQUIREMENTS B-1

APPENDIX C - OPERATING REQUIREMENTS C-1

APPENDIX D - MONITORING AND REPORTING REQUIREMENTS D-1

APPENDIX E - PLUGGING AND ABANDONMENT REQUIREMENTS E-1

Part I. AUTHORIZATION TO CONSTRUCT AND OPERATE

Under the authority of the Safe Drinking Water Act and Underground Injection Control (UIC) Program regulations of the U. S. Environmental Protection Agency (EPA) codified at Title 40 of the Code of Federal Regulations (40 CFR) Parts 2, 124, 144, 146, and 147, and according to the terms of this Permit,

Citation Oil & Gas Corporation 8223 Willow Place South Suite 250 Houston, TX 77070

is authorized to construct and to operate the following Class II injection well or wells:

Walker Hollow Unit 72 3227 FSL 503 FWL, SWNW S2, T7S, R23E Uintah County, UT

EPA regulates the injection of fluids into injection wells so that injection does not endanger underground sources of drinking water (USDWs). EPA UIC Permit conditions are based on authorities set forth at 40 CFR Parts 144 and 146, and address potential impacts to USDWs.

Under 40 CFR Part 144, Subpart D, certain conditions apply to all UIC Permits and may be incorporated either expressly or by reference. General permit conditions for which the content is mandatory and not subject to site-specific differences are not discussed in this document. Issuance of this Permit does not convey any property rights of any sort or any exclusive privilege, nor does it authorize injury to persons or property or invasion of other private rights, or any infringement of other Federal, State or local laws or regulations. (40 CFR §144.35) An EPA UIC Permit may be issued for the operating life of the injection well or project unless terminated for reasonable cause under 40 CFR §§144.39, 144.40 and 144.41, and may be reviewed at least once every five (5) years to determine if action is required under 40 CFR §144.36(a).

This Permit is issued for the life of the well(s) unless modified, revoked and reissued, or terminated under 40 CFR 144.39 or 144.40. This EPA Permit may be adopted, modified, revoked and reissued, or terminated if primary enforcement authority for a UIC Program is delegated to an Indian Tribe or State. Upon the effective date of delegation, reports, notifications, questions and other correspondence should be directed to the Indian Tribe or State Director.

Issue Date: JUN 26 2008 Effective Date JUN 26 2008

for Stephen S. Tuber
Assistant Regional Administrator*
Office of Partnerships and Regulatory Assistance

*NOTE: The person holding this title is referred to as the "Director" throughout this Permit.

PART II. SPECIFIC PERMIT CONDITIONS

Section A. WELL CONSTRUCTION REQUIREMENTS

These requirements represent the approved minimum construction standards for well casing and cement, injection tubing, and packer.

Details of the approved well construction plan are incorporated into this Permit as APPENDIX A. Changes to the approved plan that may occur during construction must be approved by the Director prior to being physically incorporated.

1. Casing and Cement.

The well or wells shall be cased and cemented to prevent the movement of fluids into or between underground sources of drinking water. The well casing and cement shall be designed for the life expectancy of the well and of the grade and size shown in APPENDIX A. Remedial cementing may be required if shown to be inadequate by cement bond log or other attempted demonstration of Part II (External) mechanical integrity.

2. Injection Tubing and Packer.

Injection tubing is required, and shall be run and set with a packer at or below the depth indicated in APPENDIX A. The packer setting depth may be changed provided it remains below the depth indicated in APPENDIX A and the Permittee provides notice and obtains the Director's approval for the change.

3. Sampling and Monitoring Devices.

The Permittee shall install and maintain in good operating condition:

(a) a "tap" at a conveniently accessible location on the injection flow line between the pump house or storage tanks and the injection well, isolated by shut-off valves, for collection of representative samples of the injected fluid; and

(b) one-half (1/2) inch female iron pipe fitting, isolated by shut-off valves and located at the wellhead at a conveniently accessible location, for the attachment of a pressure gauge capable of monitoring pressures ranging from normal operating pressures up to the Maximum Allowable Injection Pressure specified in APPENDIX C:

  (i) on the injection tubing; and

  (ii) on the tubing-casing annulus (TCA); and

(c) a pressure actuated shut-off device attached to the injection flow line set to shut-off the injection pump when or before the Maximum Allowable Injection Pressure (MAIP) specified in APPENDIX C is reached at the wellhead; and

(d) a non-resettable cumulative volume recorder attached to the injection line.

4. Well Logging and Testing

Well logging and testing requirements are found in APPENDIX B. The Permittee shall ensure the log and test requirements are performed within the time frames specified in APPENDIX B. Well logs and tests shall be performed according to current EPA-approved procedures. Well log and test results shall be submitted to the Director within sixty (60) days of completion of the logging or testing activity, and shall include a report describing the methods used during logging or testing and an interpretation of the test or log results.

5. Postponement of Construction or Conversion

The Permittee shall complete well construction within one year of the Effective Date of the Permit, or in the case of an Area Permit within one year of Authorization of the additional well. Authorization to construct and operate shall expire if the well has not been constructed within one year of the Effective Date of the Permit or Authorization and the Permit may be terminated under 40 CFR 144.40, unless the Permittee has notified the Director and requested an extension prior to expiration. Notification shall be in writing, and shall state the reasons for the delay and provide an estimated completion date. Once Authorization has expired under this part, the complete permit process including opportunity for public comment may be required before Authorization to construct and operate may be reissued.

6. Workovers and Alterations

Workovers and alterations shall meet all conditions of the Permit. Prior to beginning any addition or physical alteration to an injection well that may significantly affect the tubing, packer or casing, the Permittee shall give advance notice to the Director and obtain the Director's approval. The Permittee shall record all changes to well construction on a Well Rework Record (EPA Form 7520-12), and shall provide this and any other record of well workover, logging, or test data to EPA within sixty (60) days of completion of the activity.

A successful demonstration of Part I MI is required following the completion of any well workover or alteration which affects the casing, tubing, or packer. Injection operations shall not be resumed until the well has successfully demonstrated mechanical integrity and the Director has provided written approval to resume injection.

Section B. MECHANICAL INTEGRITY

The Permittee is required to ensure each injection well maintains mechanical integrity at all times. The Director, by written notice, may require the Permittee to comply with a schedule describing when mechanical integrity demonstrations shall be made.

An injection well has mechanical integrity if:

(a) There is no significant leak in the casing, tubing, or packer (Part I); and

(b) There is no significant fluid movement into an underground source of drinking water through vertical channels adjacent to the injection well bore (Part II).

1. Demonstration of Mechanical Integrity (MI).

The operator shall demonstrate MI prior to commencing injection and periodically thereafter. Well-specific conditions dictate the methods and the frequency for demonstrating MI and are discussed in the Statement of Basis. The logs and tests are designed to demonstrate both internal (Part I) and external (Part II) MI as described above. The conditions present at this well site warrant the methods and frequency required in Appendix B of this Permit.

In addition to these regularly scheduled demonstrations of MI, the operator shall demonstrate internal (Part I) MI after any workover which affects the tubing, packer or casing.

The Director may require additional or alternative tests if the results presented by the operator are not satisfactory to the Director to demonstrate there is no movement of fluid into or between USDWs resulting from injection activity. Results of MI tests shall be submitted to the Director as soon as possible but no later than sixty (60) days after the test is complete.

2. Mechanical Integrity Test Methods and Criteria

EPA-approved methods shall be used to demonstrate mechanical integrity. Ground Water Section Guidance No. 34 "Cement Bond Logging Techniques and Interpretation", Ground Water Section Guidance No. 37, "Demonstrating Part II (External) Mechanical Integrity for a Class II injection well permit", and Ground Water Section Guidance No. 39, "Pressure Testing Injection Wells for Part I (Internal) Mechanical Integrity" are available from EPA and will be provided upon request.

The Director may stipulate specific test methods and criteria best suited for a specific well construction and injection operation.

3. Notification Prior to Testing.

The Permittee shall notify the Director at least 30 days prior to any scheduled mechanical integrity test. The Director may allow a shorter notification period if it would be sufficient to enable EPA to witness the mechanical integrity test. Notification may be in the form of a yearly or quarterly schedule of planned mechanical integrity tests, or it may be on an individual basis.

4. Loss of Mechanical Integrity.

If the well fails to demonstrate mechanical integrity during a test, or a loss of mechanical integrity becomes evident during operation (such as presence of pressure in the TCA, water flowing at the surface, etc.), the Permittee shall notify the Director within 24 hours (see Part III Section E Paragraph 11(e) of this Permit) and the well shall be shut-in within 48 hours unless the Director requires immediate shut-in.

Within five days, the Permittee shall submit a follow-up written report that documents test results, repairs undertaken or a proposed remedial action plan.

Injection operations shall not be resumed until after the well has successfully been repaired and demonstrated mechanical integrity, and the Director has provided approval to resume injection.

Section C. WELL OPERATION

INJECTION BETWEEN THE OUTERMOST CASING PROTECTING UNDERGROUND SOURCES OF DRINKING WATER AND THE WELL BORE IS PROHIBITED.

Injection is approved under the following conditions:

1. Requirements Prior to Commencing Injection.

Well injection, including for new wells authorized by an Area Permit under 40 CFR 144.33 (c), may commence only after all well construction and pre-injection requirements herein have been met and approved. The Permittee may not commence injection until construction is complete, and

(a) The Permittee has submitted to the Director a notice of completion of construction and a completed EPA Form 7520-10 or 7520-12; all applicable logging and testing requirements of this Permit (see APPENDIX B) have been fulfilled and the records submitted to the Director; mechanical integrity pursuant to 40 CFR 146.8 and Part II Section B of this Permit has been demonstrated; and

(i) The Director has inspected or otherwise reviewed the new injection well and finds it is in compliance with the conditions of the Permit; or

(ii) The Permittee has not received notice from the Director of his or her intent to inspect or otherwise review the new injection well within 13 days of the date of the notice in Paragraph 1a, in which case prior inspection or review is waived and the Permittee may commence injection.

2. Injection Interval.

Injection is permitted only within the approved injection interval, listed in APPENDIX C. Additional individual injection perforations may be added provided that they remain within the approved injection interval and the Permittee provides notice to the Director in accordance with Part II, Section A, Paragraph 6.

3. Injection Pressure Limitation

(a) The permitted Maximum Allowable Injection Pressure (MAIP), measured at the wellhead, is found in APPENDIX C. Injection pressure shall not exceed the amount the Director determines is appropriate to ensure that injection does not initiate new fractures or propagate existing fractures in the confining zone adjacent to USDWs. In no case shall injection pressure cause the movement of injection or formation fluids into a USDW.

(b) The Permittee may request a change of the MAIP, or the MAIP may be increased or decreased by the Director in order to ensure that the requirements in Paragraph (a) above are fulfilled. The Permitee may be required to conduct a step rate injection test or other suitable test to provide information for determining the fracture pressure of the injection zone. Change of the permitted MAIP by the Director shall be by modification of this Permit and APPENDIX C.

4. Injection Volume Limitation.

Injection volume is limited to the total volume specified in APPENDIX C.

5. Injection Fluid Limitation.

Injected fluids are limited to those identified in 40 CFR 144.6(b)(2) as fluids used for enhanced recovery of oil or natural gas, including those which are brought to the surface in connection with conventional oil or natural gas production that may be commingled with waste waters from gas plants which are an integral part of production operations unless those waters are classified as a hazardous waste at the time of injection, pursuant to 40 CFR 144.6(b). Non-exempt wastes, including unused fracturing fluids or acids, gas plant cooling tower cleaning wastes, service wastes and vacuum truck wastes, are NOT approved for injection. This well is NOT approved for commercial brine injection, industrial waste fluid disposal or injection of hazardous waste as defined by CFR 40 Part 261. The Permittee shall provide a listing of the sources of injected fluids in accordance with the reporting requirements in Part II Section D Paragraph 4 and APPENDIX D of this Permit.

6. Tubing-Casing Annulus (TCA)

The tubing-casing annulus (TCA) shall be filled with water treated with a corrosion inhibitor, or other fluid approved by the Director. The TCA valve shall remain closed during normal operating conditions and the TCA pressure shall be maintained at zero (0) psi.

If TCA pressure cannot be maintained at zero (0) psi, the Permittee shall follow the procedures in Ground Water Section Guidance No. 35 "Procedures to follow when excessive annular pressure is observed on a well."

Section D. MONITORING, RECORDKEEPING, AND REPORTING OF RESULTS

1. Monitoring Parameters, Frequency, Records and Reports.

Monitoring parameters are specified in APPENDIX D. Pressure monitoring recordings shall be taken at the wellhead. The listed parameters are to be monitored, recorded and reported at the frequency indicated in APPENDIX D even during periods when the well is not operating.

Monitoring records must include:

(a) the date, time, exact place and the results of the observation, sampling, measurement, or analysis, and;

(b) the name of the individual(s) who performed the observation, sampling, measurement, or analysis, and;

(c) the analytical techniques or methods used for analysis.

2. Monitoring Methods.

(a) Monitoring observations, measurements, samples, etc. taken for the purpose of complying with these requirements shall be representative of the activity or condition being monitored.

(b) Methods used to monitor the nature of the injected fluids must comply with analytical methods cited and described in Table 1 of 40 CFR 136.3 or Appendix III of 40 CFR 261, or by other methods that have been approved in writing by the Director.

(c) Injection pressure, annulus pressure, injection rate, and cumulative injected volumes shall be observed and recorded at the wellhead under normal operating conditions, and all parameters shall be observed simultaneously to provide a clear depiction of well operation.

(d) Pressures are to be measured in pounds per square inch (psi).

(e) Fluid volumes are to be measured in standard oil field barrels (bbl).

(f) Fluid rates are to be measured in barrels per day (bbl/day).

3. Records Retention.

(a) Records of calibration and maintenance, and all original strip chart recordings for continuous monitoring instrumentation, copies of all reports required by this permit, and records of all data used to complete the application for this permit shall be retained for a period of AT LEAST THREE (3) YEARS from the date of the sample, measurement, report, or application. This period may be extended anytime prior to its expiration by request of the Director.

(b) Records of the nature and composition of all injected fluids must be retained until three (3) years after the completion of any plugging and abandonment (P&A) procedures specified under 40 CFR 144.52(a)(6) or under Part 146 Subpart G, as appropriate. The Director may require the Permittee to deliver the records to the Director at the conclusion of the retention period. The Permittee shall continue to retain the records after the three (3) year retention period unless the Permittee delivers the records to the Director or obtains written approval from the Director to discard the records.

(c) The Permittee shall retain records at the location designated in APPENDIX D.

4. Annual Reports.

Whether the well is operating or not, the Permittee shall submit an Annual Report to the Director that summarizes the results of the monitoring required by Part II Section D and APPENDIX D.

The first Annual Report shall cover the period from the effective date of the Permit through December 31 of that year. Subsequent Annual Reports shall cover the period from January 1 through December 31 of the reporting year. Annual Reports shall be submitted by February 15 of the year following data collection. EPA Form 7520-11 may be copied and shall be used to submit the Annual Report, however, the monitoring requirements specified in this Permit are mandatory even if EPA Form 7520-11 indicates otherwise.

Section E. PLUGGING AND ABANDONMENT

1. Notification of Well Abandonment, Conversion or Closure.

The Permittee shall notify the Director in writing at least forty-five (45) days prior to: 1) plugging and abandoning an injection well, 2) converting to a non-injection well, and 3) in the case of an Area Permit, before closure of the project.

2. Well Plugging Requirements

Prior to abandonment, the injection well shall be plugged with cement in a manner which isolates the injection zone and prevents the movement of fluids into or between underground sources of drinking water, and in accordance with 40 CFR 146.10 and other applicable Federal, State or local law or regulations. Tubing, packer and other downhole apparatus shall be removed. Cement with additives such as accelerators and retarders that control or enhance cement properties may be used for plugs; however, volume-extending additives and gel cements are not approved for plug use. Plug placement shall be verified by tagging. Plugging gel of at least 9.6 lb/gal shall be placed between all plugs. A minimum 50 ft surface plug shall be set inside and outside of the surface casing to seal pathways for fluid migration into the subsurface. The Plugging Record must be certified as accurate and complete by the person responsible for the plugging operation. Prior to placement of the cement plug(s) the well shall be in a state of static equilibrium with the mud weight equalized top to bottom, either by circulating the mud in the well at least once or by a comparable method prescribed by the Director.

3. Approved Plugging and Abandonment Plan.

The approved plugging and abandonment plan is incorporated into this Permit as APPENDIX E. Changes to the approved plugging and abandonment plan must be approved by the Director prior to beginning plugging operations. The Director also may require revision of the approved plugging and abandonment plan at any time prior to plugging the well.

4. Forty Five (45) Day Notice of Plugging and Abandonment.

The Permittee shall notify the Director at least forty-five (45) days prior to plugging and abandoning a well and provide notice of any anticipated change to the approved plugging and abanonment plan.

5. Plugging and Abandonment Report.

Within sixty (60) days after plugging a well, the Permittee shall submit a report (EPA Form 7520-13) to the Director. The plugging report shall be certified as accurate by the person who performed the plugging operation. Such report shall consist of either:

(a) A statement that the well was plugged in accordance with the approved plugging and abandonment plan; or

(b) Where actual plugging differed from the approved plugging and abandonment plan, an updated version of the plan, on the form supplied by the Director, specifying the differences.

6. Inactive Wells.

After any period of two years during which there is no injection the Permittee shall plug and abandon the well in accordance with Part II Section E Paragraph 2 of this Permit unless the Permittee:

(a) Provides written notice to the Director;

(b) Describes the actions or procedures the Permittee will take to ensure that the well will not endanger USDWs during the period of inactivity. These actions and procedures shall include compliance with mechanical integrity demonstration, Financial Responsibility and all other permit requirements designed to protect USDWs; and

(c) Receives written notice by the Director temporarily waiving plugging and abandonment requirements.

PART III. CONDITIONS APPLICABLE TO ALL PERMITS

Section A. EFFECT OF PERMIT

The Permittee is allowed to engage in underground injection in accordance with the conditions of this Permit. The Permittee shall not construct, operate, maintain, convert, plug, abandon, or conduct any other activity in a manner that allows the movement of fluid containing any contaminant into underground sources of drinking water, if the presence of that contaminant may cause a violation of any primary drinking water regulation under 40 CFR 142 or may otherwise adversely affect the health of persons. Any underground injection activity not authorized by this Permit or by rule is prohibited. Issuance of this Permit does not convey property rights of any sort or any exclusive privilege; nor does it authorize any injury to persons or property, any invasion of other private rights, or any infringement of any other Federal, State or local law or regulations. Compliance with the terms of this Permit does not constitute a defense to any enforcement action brought under the provisions of Section 1431 of the Safe Drinking Water Act (SDWA) or any other law governing protection of public health or the environment, for any imminent and substantial endangerment to human health or the environment, nor does it serve as a shield to the Permittee's independent obligation to comply with all UIC regulations. Nothing in this Permit relieves the Permittee of any duties under applicable regulations.

Section B. CHANGES TO PERMIT CONDITIONS

1. Modification, Reissuance, or Termination.

The Director may, for cause or upon a request from the Permittee, modify, revoke and reissue, or terminate this Permit in accordance with 40 CFR 124.5, 144.12, 144.39, and 144.40. Also, this Permit is subject to minor modification for causes as specified in 40 CFR 144.41. The filing of a request for modification, revocation and reissuance, termination, or the notification of planned changes or anticipated noncompliance on the part of the Permittee does not stay the applicability or enforceability of any condition of this Permit.

2. Conversions.

The Director may, for cause or upon a written request from the Permittee, allow conversion of the well from a Class II injection well to a non-Class II well. Conversion may not proceed until the Permittee receives written approval from the Director. Conditions of such conversion may include but are not limited to, approval of the proposed well rework, follow up demonstration of mechanical integrity, well-specific monitoring and reporting following the conversion, and demonstration of practical use of the converted configuration.

3. Transfer of Permit.

Under 40 CFR 144.38, this Permit is transferable provided the current Permittee notifies the Director at least thirty (30) days in advance of the proposed transfer date (EPA Form 7520-7) and provides a written agreement between the existing and new Permittees containing a specific date for transfer of Permit responsibility, coverage and liability between them. The notice shall adequately demonstrate that the financial responsibility requirements of 40 CFR 144.52(a)(7) will be met by the new Permittee. The Director may require modification or revocation and reissuance of the Permit to change the name of the Permittee and incorporate such other requirements as may be necessary under the Safe Drinking Water Act; in some cases, modification or revocation and reissuance is mandatory.

4. Permittee Change of Address.

Upon the Permittee's change of address, or whenever the operator changes the address where monitoring records are kept, the Permittee must provide written notice to the Director within 30 days.

5. Construction Changes, Workovers, Logging and Testing Data

The Permittee shall give advance notice to the Director, and shall obtain the Director's written approval prior to any physical alterations or additions to the permitted facility. Alterations or workovers shall meet all conditions as set forth in this permit. The Permittee shall record any changes to the well construction on a Well Rework Record (EPA Form 7520-12), and shall provide this and any other record of well workovers, logging , or test data to EPA within sixty (60) days of completion of the activity.

Following the completion of any well workovers or alterations which affect the casing, tubing, or packer, a successful demonstration of mechanical integrity (Part III, Section F of this Permit) shall be made, and written authorization from the Director received, prior to resuming injection activities.

Section C. SEVERABILITY

The Provisions of this Permit are severable, and if any provision of this Permit or the application of any provision of this Permit to any circumstance, is held invalid, the application of such provision to other circumstances, and the remainder of this Permit shall not be affected thereby.

Section D. CONFIDENTIALITY

In accordance with 40 CFR Part 2 and 40 CFR 144.5, information submitted to EPA pursuant to this Permit may be claimed as confidential by the submitter. Any such claim must be asserted at the time of submission by stamping the words "confidential business information" on each page containing such information. If no claim is made at the time of submission, EPA may make the information available to the public without further notice. If a claim is asserted, the validity of the claim will be assessed in accordance with the procedures in 40 CFR Part 2 (Public Information). Claims of confidentiality for the following information will be denied:

- The name and address of the Permittee, and
- information which deals with the existence, absence or level of contaminants in drinking water.

Section E. GENERAL PERMIT REQUIREMENTS

1. Duty to Comply.

The Permittee must comply with all conditions of this Permit. Any noncompliance constitutes a violation of the Safe Drinking Water Act (SDWA) and is grounds for enforcement action; for Permit termination, revocation and reissuance, or modification; or for denial of a permit renewal application; except that the Permittee need not comply with the provisions of this Permit to the extent and for the duration such noncompliance is authorized in an emergency permit under 40 CFR 144.34. All violations of the SDWA may subject the Permittee to penalties and/or criminal prosecution as specified in Section 1423 of the SDWA.

2. Duty to Reapply.

If the Permittee wishes to continue an activity regulated by this Permit after the expiration date of this Permit, under 40 CFR 144.37 the Permittee must apply for a new permit prior to the expiration date.

3. Need to Halt or Reduce Activity Not a Defense.

It shall not be a defense for a Permittee in an enforcement action that it would have been necessary to halt or reduce the permitted activity in order to maintain compliance with the conditions of this Permit.

4. Duty to Mitigate.

The Permittee shall take all reasonable steps to minimize or correct any adverse impact on the environment resulting from noncompliance with this Permit.

5. Proper Operation and Maintenance.

The Permittee shall at all times properly operate and maintain all facilities and systems of treatment and control (and related appurtenances) which are installed or used by the Permittee to achieve compliance with the conditions of this Permit. Proper operation and maintenance includes effective performance, adequate funding, adequate operator staffing and training, and adequate laboratory and process controls, including appropriate quality assurance procedures. This provision requires the operation of back-up or auxiliary facilities or similar systems only when necessary to achieve compliance with the conditions of this Permit.

6. Permit Actions.

This Permit may be modified, revoked and reissued or teminated for cause. The filing of a request by the Permittee for a permit modification, revocation and reissuance, or termination, or a notification of planned changes or anticipated noncompliance, does not stay any permit condition.

7. Property Rights.

This Permit does not convey any property rights of any sort, or any exclusive privilege.

8. Duty to Provide Information.

The Permittee shall furnish to the Director, within a time specified, any information which the Director may request to determine whether cause exists for modifying, revoking and reissuing, or terminating this permit, or to determine compliance with this permit. The Permittee shall also furnish to the Director, upon request, copies of records required to be kept by this Permit. The Permittee is required to submit any information required by this Permit or by the Director to the mailing address designated in writing by the Director.

9. Inspection and Entry.

The Permittee shall allow the Director, or an authorized representative, upon the presentation of credentials and other documents as may be required by law, to:

(a) Enter upon the Permittee's premises where a regulated facility or activity is located or conducted, or where records must be kept under the conditions of this Permit;

(b) Have access to and copy, at reasonable times, any records that must be kept under the conditions of this Permit;

(c) Inspect at reasonable times any facilities, equipment (including monitoring and control equipment), practices, or operations regulated or required under this Permit; and,

(d) Sample or monitor at reasonable times, for the purpose of assuring permit compliance or as otherwise authorized by the SDWA, any substances or parameters at any location.

10. Signatory Requirements.

All applications, reports or other information submitted to the Director shall be signed and certified according to 40 CFR 144.32. This section explains the requirements for persons duly authorized to sign documents, and provides wording for required certification.

11. Reporting Requirements.

(a) Planned changes. The Permittee shall give notice to the Director as soon as possible of any planned changes, physical alterations or additions to the permitted facility, and prior to commencing such changes.

(b) Anticipated noncompliance. The Permittee shall give advance notice to the Director of any planned changes in the permitted facility or activity which may result in noncompliance with permit requirements.

(c) Monitoring Reports. Monitoring results shall be reported at the intervals specified in this Permit.

(d) Compliance schedules. Reports of compliance or noncompliance with, or any progress reports on, interim and final requirements contained in any compliance schedule of this Permit shall be submitted no later than 30 days following each schedule date.

(e) Twenty-four hour reporting. The Permittee shall report to the Director any noncompliance which may endanger human health or the environment, including:

(i) Any monitoring or other information which indicates that any contaminant may cause endangerment to a USDW; or

(ii) Any noncompliance with a permit condition or malfunction of the injection system which may cause fluid migration into or between USDWs.

Information shall be provided, either directly or by leaving a message, within twenty-four (24) hours from the time the permittee becomes aware of the circumstances by telephoning (800) 227-8917 and requesting EPA Region VIII UIC Program Compliance and Technical Enforcement Director, or by contacting the EPA Region VIII Emergency Operations Center at (303) 293-1788.

In addition, a follow up written report shall be provided to the Director within five (5) days of the time the Permittee becomes aware of the circumstances. The written submission shall contain a description of the noncompliance and its cause, the period of noncompliance including exact dates and times, and if the noncompliance has not been corrected the anticipated time it is expected to continue; and the steps taken or planned to reduce, eliminate, and prevent recurrence of the noncompliance.

(f) Oil Spill and Chemical Release Reporting: The Permittee shall comply with all reporting requirements related to the occurence of oil spills and chemical releases by contacting the National Response Center (NRC) at (800) 424-8802, (202) 267-2675, or through the NRC website http://www.nrc.uscg.mil/index.htm.

(g) Other Noncompliance. The Permittee shall report all instances of noncompliance not reported under paragraphs Part III, Section E Paragraph 11(b) or Section E, Paragraph 11(e) at the time the monitoring reports are submitted. The reports shall contain the information listed in Paragraph 11(e) of this Section.

(h) Other information. Where the Permittee becomes aware that it failed to submit any relevant facts in the permit application, or submitted incorrect information in a permit application or in any report to the Director, the Permittee shall promptly submit such facts or information to the Director.

Section F. FINANCIAL RESPONSIBILITY

1. Method of Providing Financial Responsibility.

The Permittee shall maintain continuous compliance with the requirement to maintain financial responsibility and resources to close, plug, and abandon the underground injection well(s). No substitution of a demonstration of financial responsibility shall become effective until the Permittee receives written notification from the Director that the alternative demonstration of financial responsibility is acceptable. The Director may, on a periodic basis, require the holder of a permit to revise the estimate of the resources needed to plug and abandon the well to reflect changes in such costs and may require the Permittee to provide a revised demonstration of financial responsibility.

2. Insolvency.

In the event of:

(a) the bankruptcy of the trustee or issuing institution of the financial mechanism; or

(b) suspension or revocation of the authority of the trustee institution to act as trustee; or

(c) the institution issuing the financial mechanism losing its authority to issue such an instrument

the Permittee must notify the Director in writing, within ten (10) business days, and the Permittee must establish other financial assurance or liability coverage acceptable to the Director within sixty (60) days after any event specified in (a), (b), or (c) above.

The Permittee must also notify the Director by certified mail of the commencement of voluntary or involuntary proceedings under Title 11 (Bankruptcy), U.S. Code naming the owner or operator as debtor, within ten (10) business days after the commencement of the proceeding. A guarantor, if named as debtor of a corporate guarantee, must make such a notification as required under the terms of the guarantee.

APPENDIX A

WELL CONSTRUCTION REQUIREMENTS

The WHU #72 well was drilled to a total depth (TD) of 5790' with a 20" casing cemented from 40' to surface with 250 sx of Class H cement. The plug back total depth (PBTD) is 5727'.

Surface Casing: 9 5/8" 36# K-55 ST&C casing was set at 420' in a 12 1/4" hole and cemented to surface with 200 sx 50/50 poz and 50 sx Class H cement.

Production Casing: 7" 20# (0'-4300') and 23# K-55 ST&C casing was set in an 8 3/4 hole at 5780' with 1275 sx of Class H cement. The CBL identifies the TOC at approximately 1560'.

Perforations: The schematic diagram shows the existing injection perforations in the Green River Formation.

The conversion program includes installing a tubing straddle packer assembly to allow injection into the 8a, 8b, 8c and DL1a formations and allow future use in the 5a, 5a2, and 5b formations. The lower packer will be set at approximately 5100'. The upper packer will be set no higher than 100 feet of the top open perforation.

CITATION OIL & GAS CORP.
WALKER HOLLOW UNIT #72
3227' FSL, 503' FWL, Section 2-7S-23E
UINTAH CO., UTAH
Proposed Injection

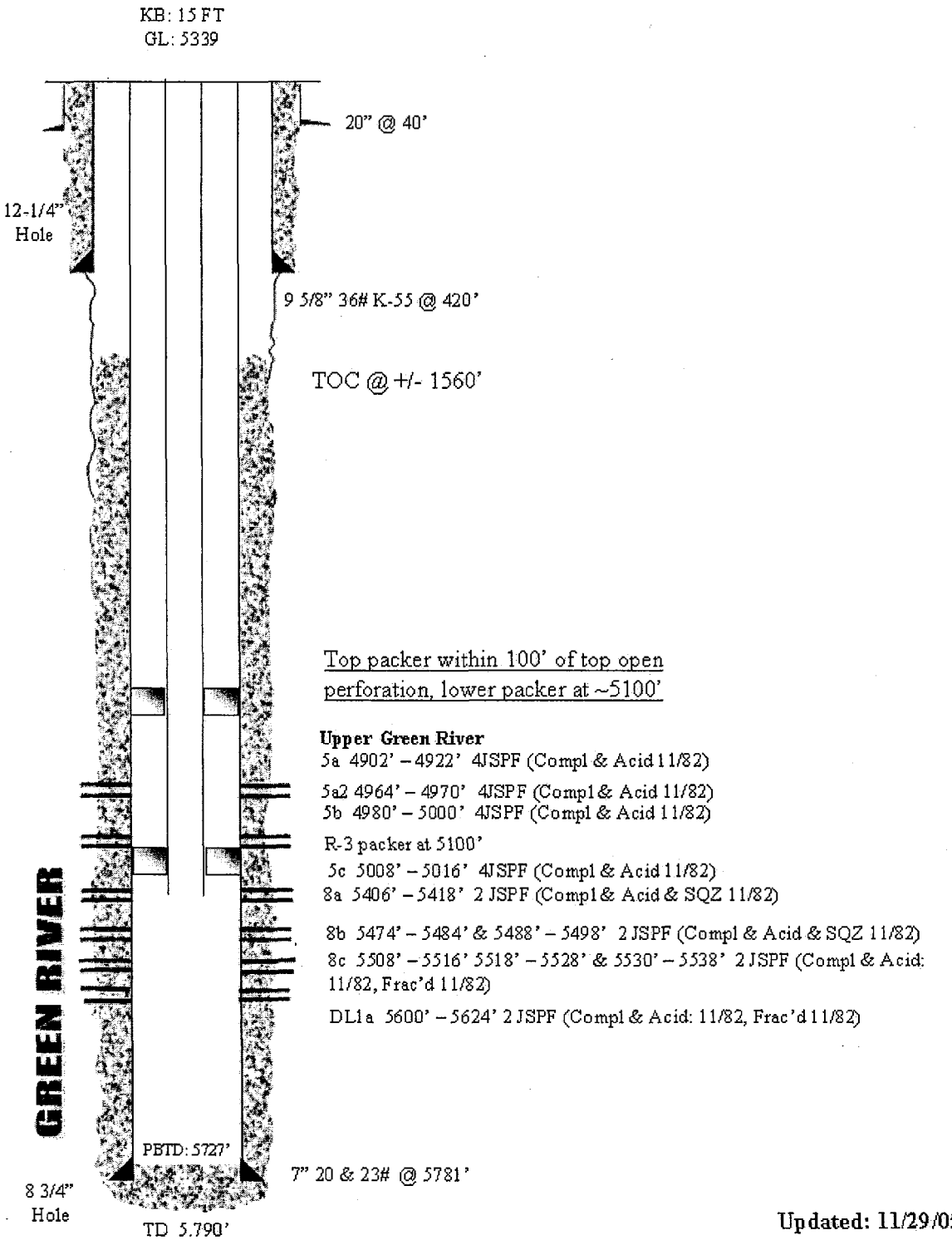

Updated: 11/29/05 - CSS

UT21119-07601_Constr_WHU72.jpg

APPENDIX B

LOGGING AND TESTING REQUIREMENTS

Logs.
Logs will be conducted according to current UIC guidance. It is the responsibility of the Permittee to obtain and use guidance prior to conducting any well logging required as a condition of this permit.

NO LOGGING REQUIREMENTS

Tests.
Tests will be conducted according to current UIC guidance. It is the responsibility of the Permittee to obtain and use guidance prior to conducting any well test required as a condition of this permit.

Injection for the purpose of conducting required tests is authorized prior to receiving authorization to inject.

WELL NAME: Walker Hollow Unit 72

TYPE OF TEST	DATE DUE
Standard Annulus Pressure	Prior to receiving authorization to inject and at least once every five years after the last successful demonstration of Part I Mechanical Integrity.
Pore Pressure	Prior to receiving authorization to inject.

APPENDIX C

OPERATING REQUIREMENTS

MAXIMUM ALLOWABLE INJECTION PRESSURE:

Maximum Allowable Injection Pressure (MAIP) as measured at the surface shall not exceed the pressure(s) listed below.

WELL NAME	MAXIMUM ALLOWED INJECTION PRESSURE (psi) ZONE 1 (Upper)
Walker Hollow Unit 72	1,140

INJECTION INTERVAL(S):

Injection is permitted only within the approved injection interval listed below. Injection perforations may be altered provided they remain within the approved injection interval and the Permittee provides notice to the Director in accordance with Part II, Section A, Paragraph 6. Specific injection perforations can be found in Appendix A.

WELL NAME: Walker Hollow Unit 72

FORMATION NAME	APPROVED INJECTION INTERVAL (KB, ft) TOP	BOTTOM	FRACTURE GRADIENT (psi/ft)
Green River (Evacuation Creek)	3,350.00 -	4,562.00	
Green River (Parachute Creek)	4,562.00 -	4,851.00	
Green River (Garden Gulch)	4,851.00 -	5,645.00	0.668

ANNULUS PRESSURE:

The annulus pressure shall be maintained at zero (0) psi as measured at the wellhead. If this pressure cannot be maintained, the Permittee shall follow the procedures listed under Part II, Section C. 6. of this permit.

MAXIMUM INJECTION VOLUME:

There is no limitation on the number of barrels per day (bbls/day) of water that shall be injected into this well, provided further that in no case shall injection pressure exceed that limit shown in Appendix C.

APPENDIX D

MONITORING AND REPORTING PARAMETERS

This is a listing of the parameters required to be observed, recorded, and reported. Refer to the permit Part II, Section D, for detailed requirements for observing, recording, and reporting these parameters.

OBSERVE MONTHLY AND RECORD AT LEAST ONCE EVERY THIRTY DAYS	
OBSERVE AND RECORD	Injection pressure (psig)
	Annulus pressure(s) (psig)
	Injection rate (bbl/day)
	Fluid volume injected since the well began injecting (bbls)

ANNUALLY	
ANALYZE	Injected fluid total dissolved solids (mg/l)
	Injected fluid specific gravity
	Injected fluid specific conductivity
	Injected fluid pH

ANNUALLY	
REPORT	Each month's maximum and averaged injection pressures (psig)
	Each month's maximum and minimum annulus pressure(s) (psig)
	Each month's injected volume (bbl)
	Fluid volume injected since the well began injecting (bbl)
	Written results of annual injected fluid analysis
	Sources of all fluids injected during the year

In addition to these items, additional Logging and Testing results may be required periodically. For a list of those items and their due dates, please refer to APPENDIX B - LOGGING AND TESTING REQUIREMENTS.

Records of all monitoring activities must be retained and made available for inspection at the following location:

8223 Willow Place South Dr.

Vernal, UT 77070

APPENDIX E

PLUGGING AND ABANDONMENT REQUIREMENTS

Prior to plugging the well, run a Mechanical Integrity Test, pull tubing and packer, and repair any casing leaks.

At a minimum, the following plugs are required:

PLUG NO. 1: Set a Cast Iron Cement Retainer (CICR) at approximately 5350 feet and pump approximately 50 sx of cement below the retainer. Place at least 20 feet of cement on top of CICR.

PLUG NO. 2: Set a CICR approximately 50 feet above uppermost perforation and pump approximately 50 sx of cement below the retainer. Place at least 20 feet of cement on top of CICR.

PLUG NO. 3: Set a cement plug inside 7 inch casing from approximately 3300 feet to 3400 feet (top of confining zone).

PLUG NO. 4: Set a cement plug inside and outside the 7 inch casing from approximately 350 feet to 485 feet across the surface casing footing.

PLUG NO. 5: Set a surface plug inside and outside the 7 inch casing at least 50 feet from surface.

NOTE: Plug placement must be verified by tagging the top of the plug after the cement has had adequate time to set

CITATION OIL & GAS CORP.
WALKER HOLLOW UNIT #72
3227' FSL, 503' FWL, Section 2-7S-23E
UINTAH, UTAH
P&A Proposal

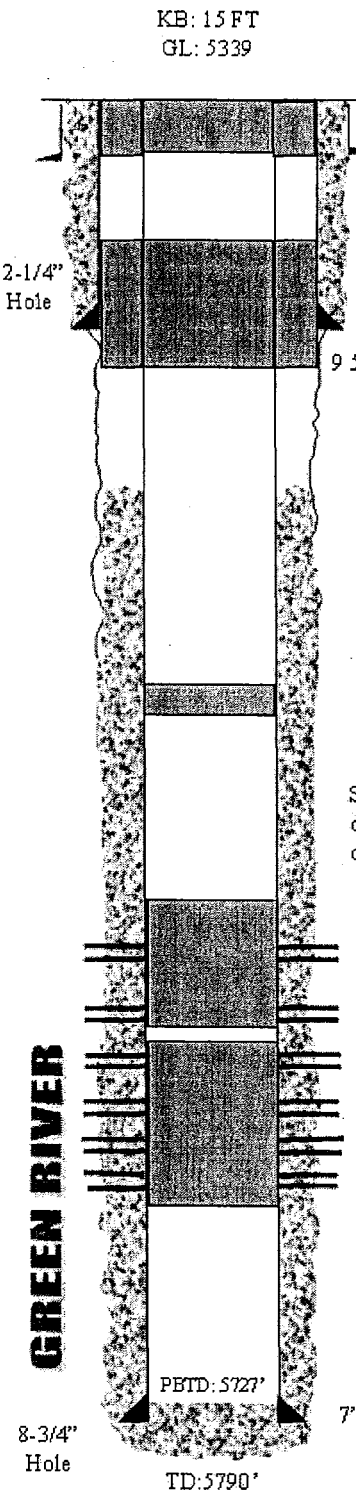

At least a 50' surface plug inside and outside of 7" casing

20" @ 40'

Cement plug inside and outside of 7" casing from approximately 350'-485'

9 5/8" 36# K-55 @ 420'

TOC @ +/- 1560'

Estimated base of USDW @ 3148'

100' cement from approximately 3300' to 3400' (top of confining zone)

Set CICR ~5350' and squeeze 50 sx of cement below, with at least 20' cement on top, set a second CICR ~50' above top perforation and squeeze 50 sx of cement below, with at least 20' cement on top.

Upper Green River

5a 4902' – 4922' 4JSPF (Compl & Acid 11/82)
5a2 4964' – 4970' 4JSPF (Compl & Acid 11/82)
5b 4980' – 5000' 4JSPF (Compl & Acid 11/82)
5c 5008' – 5016' 4JSPF (Compl & Acid 11/82)

8a 5406' – 5418' 2 JSPF (Compl & Acid & SQZ 11/82)

8b 5474' – 5484' & 5488' – 5498' 2 JSPF (Compl & Acid & SQZ 11/82)
8c 5508' – 5516' 5518' – 5528' & 5530' – 5538' 2 JSPF (Compl & Acid: 11/82, Frac'd 11/82)

DL1a 5600' – 5624' 2 JSPF (Compl & Acid: 11/82, Frac'd 11/82)

7" 20 & 23# @ 5781'

Updated: 11/29/05 - CSS

UT21119-07601_P&A_WHU72.jpg

STATEMENT OF BASIS

CITATION OIL & GAS CORPORATION
WALKER HOLLOW UNIT 72
UINTAH COUNTY, UT

EPA PERMIT NO. UT21119-07601

CONTACT: Wendy Cheung
U. S. Environmental Protection Agency
Ground Water Program, 8P-W-GW
1595 Wynkoop Street
Denver, Colorado 80202-1129
Telephone: 1-800-227-8917 ext. 312-6242

This STATEMENT OF BASIS gives the derivation of site-specific UIC Permit conditions and reasons for them. Referenced sections and conditions correspond to sections and conditions in the Permit.

EPA UIC permits regulate the injection of fluids into underground injection wells so that the injection does not endanger underground sources of drinking water. EPA UIC permit conditions are based upon the authorities set forth in regulatory provisions at 40 CFR Parts 144 and 146, and address potential impacts to underground sources of drinking water. Under 40 CFR 144.35 Issuance of this permit does not convey any property rights of any sort or any exclusive privilege, nor authorize injury to persons or property of invasion of other private rights, or any infringement of other Federal, State or local laws or regulations. Under 40 CFR 144 Subpart D, certain conditions apply to all UIC Permits and may be incorporated either expressly or by reference. General Permit conditions for which the content is mandatory and not subject to site-specific differences (40 CFR Parts 144, 146 and 147) are not discussed in this document.

Upon the Effective Date when issued, the Permit authorizes the construction and operation of injection wells so that the injection does not endanger underground sources of drinking water, governed by the conditions specified in the Permit. The Permit is issued for the operating life of the injection well or project unless terminated for reasonable cause under 40 CFR 144.39, 144.40 and 144.41. The Permit is subject to EPA review at least once every five (5) years to determine if action is required under 40 CFR 144.36(a).

PART I. General Information and Description of Facility

Citation Oil & Gas Corporation
8223 Willow Place South
Suite 250
Houston, TX 77070

on

January 8, 2007

submitted an application for an Underground Injection Control (UIC) Program Permit or Permit Modification for the following injection well or wells:

Walker Hollow Unit 72
3227 FSL 503 FWL, SWNW S2, T7S, R23E
Uintah County, UT

Regulations specific to Uintah-Ouray Indian Reservation injection wells are found at 40 CFR 147 Subpart TT.

The application, including the required information and data necessary to issue or modify a UIC Permit in accordance with 40 CFR Parts 144, 146 and 147, was reviewed and determined by EPA to be complete.

The Permit will expire upon delegation of primary enforcement responsibility (primacy) for applicable portions of the UIC Program to the Ute Indian Tribe or the State of Utah unless the delegated agency has the authority and chooses to adopt and enforce this Permit as a Tribal or State Permit.

TABLE 1.1 shows the status of the well or wells as "New", "Existing", or "Conversion" and for Existing shows the original date of injection operation. Well authorization "by rule" under 40 CFR Part 144 Subpart C expires automatically on the Effective Date of an issued UIC Permit.

TABLE 1.1

WELL STATUS / DATE OF OPERATION

CONVERSION WELLS		
Well Name	**Well Status**	**Date of Operation**
Walker Hollow Unit 72	Conversion	N/A

PART II. Permit Considerations (40 CFR 146.24)

Hydrogeologic Setting

The well is located in the Walker Hollow Unit near the center of the broad, gently northward dipping south flank of the Uinta Basin. The Uinta Basin is a topographic and structural trough encompassing an area of more than 9,300 square miles (14,900 km2). The majority of the Basin is located in northeastern Utah, with a small portion in northwest Colorado. The basin is bounded on the north by the east-west-trending Uinta Mountains and the Uinta Basin boundary fault and a gently dipping south flank. The basin is an asymmetrical syncline with the deepest end in the north central. The basin was formed in Paleocene to Eocene time creating a large area of internal drainage which was filled by the ancestral Lake Uinta. The lacustrine, or fresh water lake-formed, sediments deposited in and around Lake Uinta make up the Uinta and Green River Formations.

The Uinta Formation generally consists of 5' to 20' thick brown lenticular fluvial sandstone and interbedded varicolored shales. The Uinta is underlain by the Green River Formation which consists of interbedded lake (lacustrine) margin sandstones, limestones and shale beds. The cyclic nature of Green River deposition resulted in numerous stacked deltaic deposits. The Green River Formation is a highly oil-productive formation from which over 500 billion barrels have been produced. Several distinct geologic hydrocarbon productive members within the Green River formation are identified as the Evacuation Creek, Parachute Creek, Garden Gulch, Douglas Creek and Basal Carbonate Members. The Basal Carbonate Member is the basal unit of the Green River Formation in the Walker Hollow Unit.

Geologic Setting (TABLE 2.1)

TABLE 2.1
GEOLOGIC SETTING
Walker Hollow Unit 72

Formation Name	Top (ft)	Base (ft)	TDS (mg/l)	Lithology
Uinta	0	3,148	< 10,000	sandstone, siltstone, and shale
Green River (Evacuation Creek)	3,148	4,562	< 10,000	sandstone, siltstone, and shale
Green River (Parachute Creek)	4,562	4,851	< 10,000	sandstone, siltstone, and shale
Green River (Garden Gulch)	4,851	5,645	< 10,000	sandstone, siltstone, and shale
Green River (Douglas Creek)	5,645	5,790	< 10,000	sandstone, siltstone, and shale

Proposed Injection Zone(s) (TABLE 2.2)

An injection zone is a geological formation, group of formations, or part of a formation that receives fluids through a well. The proposed injection zones are listed in TABLE 2.2.

Injection will occur into an injection zone that is separated from USDWs by a confining zone which is free of known open faults or fractures within the Area of Review.

The proposed injection is into eight sandstone sequences (DU 5A, DU 5A2, DU 5B, DU 5C, DU 8A, DU 8B, DU 8C, DL 1A) within the Garden Gulch Member of the Green River Formation between the depths of 4902 feet to 5624 feet. The permitted injection zones consist of formations or portions of formations below the confining zone; the basal portion of Evacuation Creek, the

Parachute Creek, and the Garden Gulch.

TABLE 2.2
INJECTION ZONES
Walker Hollow Unit 72

Formation Name	Top (ft)	Base (ft)	TDS (mg/l)	Fracture Gradient (psi/ft)	Porosity	Exempted?*
Green River (Evacuation Creek)	3,350	4,562	< 10,000			E
Green River (Parachute Creek)	4,562	4,851	< 10,000			E
Green River (Garden Gulch)	4,851	5,645	< 10,000	0.668		E

*** C - Currently Exempted**
E - Previously Exempted
P - Proposed Exemption
N/A - Not Applicable

Confining Zone(s) (TABLE 2.3)

A confining zone is a geological formation, part of a formation, or a group of formations that limits fluid movement above the injection zone. The confining zone or zones are listed in TABLE 2.3.

The Garden Gulch Member of the Green River Formation consists of a series of interbedded shale and sandstone of relatively thin thickness (< 50 feet). An acceptable zone was identified in the Evacuation Creek Member between 3350 feet and 3500 feet that also had adequate cement bond behind the longstring casing. In this region, the lithology is predominantly shale with some sandstone and is above the top of oil shows (degraded oil).

TABLE 2.3
CONFINING ZONES
Walker Hollow Unit 72

Formation Name	Formation Lithology	Top (ft)	Base (ft)
Green River (Evacuation Creek)	sandstone, siltstone, and shale	3,350	3,500

Underground Sources of Drinking Water (USDWs) (TABLE 2.4)

Aquifers or the portions thereof which contain less than 10,000 mg/l total dissolved solids (TDS) and are being or could in the future be used as a source of drinking water are considered to be USDWs. The USDWs in the area of this facility are identified in TABLE 2.4.

The Uinta-Animas aquifer in the Uinta Basin is present in water-yielding beds of sandstone, conglomerate, and siltstone of the Uinta Formation and Green River Formation of northeastern Utah. Site specific TDS data in Unita Fomation at the well is unknown, however dissolved solids concentrations in water in the Uinta-Animas aquifer in the Uinta Basin generally range from 500 to

3,000 milligrams per liter.

Water analysis of the Green River Formation from production wells indicates that the total dissolved solids (TDS) can be as low as 2000 TDS (USGS Produced Water Database http://energy.cr.usgs.gov/prov/prodwat/data2.htm).

The Green River Formation has been exempted in the Walker Hollow Unit, therefore the lowermost USDW is the Uinta Formation.

TABLE 2.4
UNDERGROUND SOURCES OF DRINKING WATER (USDW)
Walker Hollow Unit 72

Formation Name	Formation Lithology	Top (ft)	Base (ft)	TDS (mg/l)
Uinta	sandstone, siltstone, and shale	0	3,148	< 10,000

PART III. Well Construction (40 CFR 146.22)

TABLE 3.1
WELL CONSTRUCTION REQUIREMENTS
Walker Hollow Unit 72

Casing Type	Hole Size (in)	Casing Size (in)	Cased Interval (ft)	Cemented Interval (ft)
Surface	12.25	9.63	0 - 420	0 - 420
Longstring	8.75	7.00	0 - 5,780	1,560 - 5,780
Other		20.00	0 - 40	0 - 40

The approved well completion plan will be incorporated into the Permit as APPENDIX A and will be binding on the Permittee. Modification of the approved plan is allowed under 40 CFR 144.52(a)(1) provided written approval is obtained from the Director prior to actual modification.

Casing and Cementing (TABLE 3.1)

The well construction plan was evaluated and determined to be in conformance with standard practices and guidelines that ensure well injection does not result in the movement of fluids into USDWs. Well construction details for this "new" injection well is shown in TABLE 3.1.

Remedial cementing may be required if the casing cement is shown to be inadequate by cement bond log or other demonstration of Part II (External) mechanical integrity.

Tubing and Packer

Injection tubing is required to be installed from a packer up to the surface inside the well casing. The packer will be set above the uppermost perforation. The tubing and packer are designed to prevent injection fluid from coming into contact with the outermost casing.

Tubing-Casing Annulus (TCA)

The TCA allows the casing, tubing and packer to be pressure-tested periodically for mechanical integrity, and will allow for detection of leaks. The TCA will be filled with fresh water treated with a corrosion inhibitor or other fluid approved by the Director.

Monitoring Devices

The permittee will be required to install and maintain wellhead equipment that allows for monitoring pressures and providing access for sampling the injected fluid. Required equipment may include but is not limited to: 1) shut-off valves located at the wellhead on the injection tubing and on the TCA; 2) a flow meter that measures the cumulative volume of injected fluid; 3) fittings or pressure gauges attached to the injection tubing and the TCA for monitoring the injection and TCA pressure; and 4) a tap on the injection line, isolated by shut-off valves, for sampling the injected fluid.

All sampling and measurement taken for monitoring must be representative of the monitored activity.

PART IV. Area of Review, Corrective Action Plan (40 CFR 144.55)

TABLE 4.1 lists the wells in the Area of Review ("AOR") and shows the well type, operating status, depth, top of casing cement ("TOC") and whether a Corrective Action Plan ("CAP") is required for the well.

There are no AOR wells for this Permit.

Area Of Review

Applicants for Class I, II (other than "existing" wells) or III injection well Permits are required to identify the location of all known wells within the injection well's Area of Review (AOR) which penetrate the injection zone, or in the case of Class II wells operating over the fracture pressure of the formation, all known wells within the area of review that penetrate formations which may be affected by increased pressure. Under 40 CFR 146.6 the AOR may be a fixed radius of not less than one quarter (1/4) mile or a calculated zone of endangering influence. For Area Permits, a fixed width of not less than one quarter (1/4) mile for the circumscribing area may be used.

Corrective Action Plan

For wells in the AOR which are improperly sealed, completed, or abandoned, the applicant shall develop a Corrective Action Plan (CAP) consisting of the steps or modifications that are necessary to prevent movement of fluid into USDWs.

The CAP will be incorporated into the Permit as APPENDIX F and become binding on the permittee.

PART V. Well Operation Requirements (40 CFR 146.23)

TABLE 5.1
INJECTION ZONE PRESSURES
Walker Hollow Unit 72

Formation Name	Depth Used to Calculate MAIP (ft)	Fracture Gradient (psi/ft)	Initial MAIP (psi)
Green River (Parachute Creek)			
Green River (Evacuation Creek)			
Green River (Garden Gulch)	4,902	0.668	1,140

Approved Injection Fluid

The approved injection fluid is limited to Class II injection well fluids pursuant to 40 CFR § 144.6(b). For disposal wells injecting water brought to the surface in connection with natural gas storage operations, or conventional oil or natural gas production, the fluid may be commingled and the well used to inject other Class II wastes such as drilling fluids and spent well completion, treatment and stimulation fluid. Injection of non-exempt wastes, including unused fracturing fluids or acids, gas plant cooling tower cleaning wastes, service wastes, and vacuum truck and drum rinsate from trucks and drums transporting or containing non-exempt waste, is prohibited.

Injection Pressure Limitation

Injection pressure, measured at the wellhead, shall not exceed a maximum calculated to assure that the pressure used during injection does not initiate new fractures or propagate existing fractures in the confining zones adjacent to the USDWs.

The applicant submitted injection fluid density and injection zone data which was used to calculate a formation fracture pressure and to determine the maximum allowable injection pressure (MAIP), as measured at the surface, for this Permit.

TABLE 5.1 lists the fracture gradient for the injection zone and the approved MAIP, determined according to the following formula:

$$FP = [fg - (0.433 * sg)] * d$$

FP = formation fracture pressure (measured at surface)
fg = fracture gradient (from submitted data or tests)
sg = specific gravity (of injected fluid)
d = depth to top of injection zone (or top perforation)

Injection Volume Limitation

Cumulative injected fluid volume limits are set to assure that injected fluids remain within the boundary of the exempted area. Cumulative injected fluid volume is limited when injection occurs into an aquifer that has been exempted from protection as a USDW.

Mechanical Integrity (40 CFR 146.8)

An injection well has mechanical integrity if:

1. there is no significant leak in the casing, tubing, or packer (Part I); and
2. there is no significant fluid movement into a USDW through vertical channels adjacent to the injection well bore (Part II).

The Permit prohibits injection into a well which lacks mechanical integrity.

The Permit requires that the well demonstrate mechanical integrity prior to injection and periodically thereafter. A demonstration of mechanical integrity includes both internal (Part I) and external (Part II). The methods and frequency for demonstrating Part I and Part II mechanical integrity are dependent upon well-specific conditions as explained below.

Part I (Internal) MI will be demonstrated prior to beginning injection and at least once every five (5) years after the last successful demonstration of Part I MI. A demonstration of Part I MI is also required prior to resuming injection following any workover operation that affects the casing, tubing, or packer. Part I MI may be demonstrated by a standard tubing-casing annulus pressure test using the maximum permitted injection pressure or 1000 psi, whichever is less, with ten (10) percent or less pressure loss over thirty (30) minutes.

Cement records for this well show that adequate cement exists behind pipe between the confining interval. Further demonstration of Part II (External) MI will not be required.

PART VI. Monitoring, Recordkeeping and Reporting Requirements

Injection Well Monitoring Program

At least once a year the permittee must analyze a sample of the injected fluid for total dissolved solids (TDS), specific conductivity, pH, and specific gravity. This analysis shall be reported to EPA annually as part of the Annual Report to the Director. Any time a new source of injected fluid is added, a fluid analysis shall be made of the new source.

Instantaneous injection pressure, injection flow rate, cumulative fluid volume and TCA pressures must be observed on a weekly basis. A recording, at least once every thirty (30) days, must be made of the injection pressure, injection flow rate and cumulative fluid volume, and the maximum and average value for each must be determined for each month. This information is required to be reported annually as part of the Annual Report to the Director.

PART VII. Plugging and Abandonment Requirements (40 CFR 146.10)

Plugging and Abandonment Plan

Prior to abandonment, the well shall be plugged in a manner that isolates the injection zone and prevents movement of fluid into or between USDWs, and in accordance with any applicable Federal, State or local law or regulation. Tubing, packer and other downhole apparatus shall be removed. Cement with additives such as accelerators and retarders that control or enhance cement properties may be used for plugs; however, volume-extending additives and gel cements are not approved for plug use. Plug placement shall be verified by tagging. Plugging gel of at least 9.6 lb/gal shall be placed between all plugs. A minimum 50 ft surface plug shall be set inside and outside of the surface casing to seal pathways for fluid migration into the subsurface. Within

sixty (60) days after plugging the owner or operator shall submit Plugging Record (EPA Form 7520 13) to the Director. The Plugging Record must be certified as accurate and complete by the person responsible for the plugging operation. The plugging and abandonment plan is described in Appendix E of the Permit.

PART VIII. Financial Responsibility (40 CFR 144.52)

Demonstration of Financial Responsibility

The permittee is required to maintain financial responsibility and resources to close, plug, and abandon the underground injection operation in a manner prescribed by the Director. The permittee shall show evidence of such financial responsibility to the Director by the submission of a surety bond, or other adequate assurance such as financial statements or other materials acceptable to the Director. The Regional Administrator may, on a periodic basis, require the holder of a lifetime permit to submit a revised estimate of the resources needed to plug and abandon the well to reflect inflation of such costs, and a revised demonstration of financial responsibility if necessary. Initially, the operator has chosen to demonstrate financial responsibility with:

Surety Bond, received March 27, 2006

Evidence of continuing financial responsibility is required to be submitted to the Director annually.

FORM 9

STATE OF UTAH
DEPARTMENT OF NATURAL RESOURCES
DIVISION OF OIL, GAS AND MINING

5. LEASE DESIGNATION AND SERIAL NUMBER: ML 3175

SUNDRY NOTICES AND REPORTS ON WELLS

6. IF INDIAN, ALLOTTEE OR TRIBE NAME:

Do not use this form for proposals to drill new wells, significantly deepen existing wells below current bottom-hole depth, reenter plugged wells, or to drill horizontal laterals. Use APPLICATION FOR PERMIT TO DRILL form for such proposals.

7. UNIT or CA AGREEMENT NAME: Walker Hollow Unit UTU66837A

1. TYPE OF WELL: OIL WELL ☑ GAS WELL ☐ OTHER

8. WELL NAME and NUMBER: Walker Hollow Unit #72

2. NAME OF OPERATOR: Citation Oil & Gas Corp.

9. API NUMBER: 4304731227

3. ADDRESS OF OPERATOR: P.O. Box 690688 CITY Houston STATE TX ZIP 77269-0688 PHONE NUMBER: (281) 517-7800

10. FIELD AND POOL, OR WILDCAT: Walker Hollow Green River

4. LOCATION OF WELL

FOOTAGES AT SURFACE: 3227' FSL & 503' FWL COUNTY: Uintah

QTR/QTR, SECTION, TOWNSHIP, RANGE, MERIDIAN: SWNW 2 7S 23E STATE: UTAH

11. CHECK APPROPRIATE BOXES TO INDICATE NATURE OF NOTICE, REPORT, OR OTHER DATA

TYPE OF SUBMISSION	TYPE OF ACTION		
☑ NOTICE OF INTENT (Submit in Duplicate)	☐ ACIDIZE	☐ DEEPEN	☐ REPERFORATE CURRENT FORMATION
Approximate date work will start:	☐ ALTER CASING	☐ FRACTURE TREAT	☐ SIDETRACK TO REPAIR WELL
	☐ CASING REPAIR	☐ NEW CONSTRUCTION	☐ TEMPORARILY ABANDON
	☐ CHANGE TO PREVIOUS PLANS	☐ OPERATOR CHANGE	☐ TUBING REPAIR
	☐ CHANGE TUBING	☐ PLUG AND ABANDON	☐ VENT OR FLARE
☐ SUBSEQUENT REPORT (Submit Original Form Only)	☐ CHANGE WELL NAME	☐ PLUG BACK	☐ WATER DISPOSAL
Date of work completion:	☐ CHANGE WELL STATUS	☐ PRODUCTION (START/RESUME)	☐ WATER SHUT-OFF
	☐ COMMINGLE PRODUCING FORMATIONS	☐ RECLAMATION OF WELL SITE	☑ OTHER: SHUT IN - PENDING CONVERSION
	☐ CONVERT WELL TYPE	☐ RECOMPLETE - DIFFERENT FORMATION	

12. DESCRIBE PROPOSED OR COMPLETED OPERATIONS. Clearly show all pertinent details including dates, depths, volumes, etc.

Citation Oil & Gas Corp. requests approval to retain this well in shut-in status pending conversion to a water injection well. The conversion is planned for Spring, 2009. EPA Permit UT21119-07601 was approved 6/26/2008 (see attached). Once well is converted to injection and tested for mechanical integrity, injection will commence upon EPA approval.

COPY SENT TO OPERATOR
Date: 3.5.2009
Initials: KS

NAME (PLEASE PRINT) Debra Harris TITLE Regulatory Compliance Coordinator

SIGNATURE Debra Harris DATE 2/2/2009

(This space for State use only)

APPROVED BY THE STATE OF UTAH DIVISION OF OIL, GAS, AND MINING
DATE: 3/2/09
BY: [signature]
*Valid through July 1, 2009

(See Instructions on Reverse Side)

(5/2000)

Citation
OIL & GAS CORP.

February 9, 2009

State of Utah
Division of Oil, Gas and Mining
1594 West North Temple, Suite 1210
Sale Lake City, Utah 84114-5801

ATTN: Mr. Dustin Doucet, Petroleum Engineer

Re: Extended Shut-In and Temporarily Abandoned Well Requirements
Bingham 10-1; API 43-043-30025
Walker Hollow Unit 72; API 43-047-31227

Mr. Doucette,

Per your letter dated January 20, 2009 (copy attached) please find enclosed sundry notices requesting extension of shut-in and temporarily abandoned well status for the Bingham 10-1 and the Walker Hollow Unit 72 as referenced above.

We apologize for the oversight in submitting the sundries previously. Per the attached, the Walker Hollow Unit 72 should be converted to injection during the spring of 2009. The Bingham 10-1 is planned for recompletion with possible conversion should the recompletion be unsuccessful. I have enclosed a copy of the approved sundry for this project as well as the approved injection permit for the Walker Hollow Unit 72.

If you need additional information please contact me at (281) 517-7194 or via email at dharris@cogc.com.

Sincerely,

Debra Harris

Debra Harris
Regulatory Compliance Coordinator

/dkh
Enclosures

RECEIVED
FEB 10 2009
DIV. OF OIL, GAS & MINING

cc: CTR, SEW

FORM 9

STATE OF UTAH
DEPARTMENT OF NATURAL RESOURCES
DIVISION OF OIL, GAS AND MINING

5. LEASE DESIGNATION AND SERIAL NUMBER: ML 3175

SUNDRY NOTICES AND REPORTS ON WELLS

6. IF INDIAN, ALLOTTEE OR TRIBE NAME:

Do not use this form for proposals to drill new wells, significantly deepen existing wells below current bottom-hole depth, reenter plugged wells, or to drill horizontal laterals. Use APPLICATION FOR PERMIT TO DRILL form for such proposals.

7. UNIT or CA AGREEMENT NAME: Walker Hollow Unit

1. TYPE OF WELL: OIL WELL ☑ GAS WELL ☐ OTHER

8. WELL NAME and NUMBER: Walker Hollow Unit 72

2. NAME OF OPERATOR: Citation Oil & Gas Corp.

9. API NUMBER: 4304731227

3. ADDRESS OF OPERATOR: P O Box 690688 CITY Houston STATE TX ZIP 77269

PHONE NUMBER: (281) 517-7800

10. FIELD AND POOL, OR WILDCAT: Walker Hollow Green River

4. LOCATION OF WELL

FOOTAGES AT SURFACE: 3227' FSL

COUNTY: Uintah

QTR/QTR, SECTION, TOWNSHIP, RANGE, MERIDIAN: SWNW 12 7S 23E

STATE: UTAH

11. CHECK APPROPRIATE BOXES TO INDICATE NATURE OF NOTICE, REPORT, OR OTHER DATA

TYPE OF SUBMISSION	TYPE OF ACTION		
☑ NOTICE OF INTENT (Submit in Duplicate)	☐ ACIDIZE	☐ DEEPEN	☑ REPERFORATE CURRENT FORMATION
Approximate date work will start:	☐ ALTER CASING	☐ FRACTURE TREAT	☐ SIDETRACK TO REPAIR WELL
	☐ CASING REPAIR	☐ NEW CONSTRUCTION	☐ TEMPORARILY ABANDON
	☐ CHANGE TO PREVIOUS PLANS	☐ OPERATOR CHANGE	☐ TUBING REPAIR
	☐ CHANGE TUBING	☐ PLUG AND ABANDON	☐ VENT OR FLARE
☐ SUBSEQUENT REPORT (Submit Original Form Only)	☐ CHANGE WELL NAME	☐ PLUG BACK	☐ WATER DISPOSAL
Date of work completion:	☐ CHANGE WELL STATUS	☐ PRODUCTION (START/RESUME)	☐ WATER SHUT-OFF
	☐ COMMINGLE PRODUCING FORMATIONS	☐ RECLAMATION OF WELL SITE	☐ OTHER:
	☐ CONVERT WELL TYPE	☐ RECOMPLETE - DIFFERENT FORMATION	

12. DESCRIBE PROPOSED OR COMPLETED OPERATIONS. Clearly show all pertinent details including dates, depths, volumes, etc.

Citation Oil & Gas Corp. requests permission to add additional perfs in the permitted injection interval per EPA Permit that was approved 6/26/2008. Please see the attached wellbore schematics and procedure.

COPY SENT TO OPERATOR
Date: 7.28.2009
Initials: KS

NAME (PLEASE PRINT) Bridget Lisenbe TITLE Permitting Analyst

SIGNATURE Bridget Lisenbe DATE 7/7/2008

(This space for State use only)

APPROVED BY THE STATE OF UTAH DIVISION OF OIL, GAS, AND MINING
DATE: 7/20/09
BY: [signature]

Federal Approval Of This Action Is Necessary

RECEIVED
JUL 13 2009
DIV. OF OIL, GAS & MINING

(5/2000) (See Instructions on Reverse Side)

WORKOVER PROCEDURE

PROJECT: Walker Hollow Unit 72: OAP and Convert to Water Injection Well

DRILLED & COMPLETED: 8/82 thru 11/82 LAST WO: 6/20/05 – Flush tubing, COP, COPR & RTP

LOCATION: 3227' FSL & 503' FWL, (SW NW) Sec. 2, T7S, R23E

FIELD: Walker Hollow Green River COUNTY: Uintah STATE: UT

TD: 5790' KB PBTD: 5727' KB DATUM: 5339' GL KB to GL: 15'

CASING AND LINER RECORD

SIZE	WEIGHT	DEPTH	CEMENT	HOLE SIZE	TOC	REMARKS
9 5/8"	36#	420'	220 sx	12 1/4"	SURFACE	CIRC'D
7"	20 & 23#	5781'	1275 sx	8 3/4"	1560'	CBL (9/9/82)

PRESENT FORMATION AND COMPLETION: Green River: 4902' – 5624' OA

TUBING: 182 jts 2 7/8" 6.5# J-55 8rd EUE tbg, SN @ ~5654' KB, 2 7/8" x 7" TAC @ ~5655' KB, 1 jt 2 7/8" 6.5# J-55 8rd EUE tbg w/ NB collar, EOT @ 5689' KB

ROD DETAIL: 1 1/2" x 30' PR w/ Liner, 2', 4', 6', 6' x 1" 'D' pony rods, 63 – 1" 'D' SR, 75 – 7/8" 'D' SR, 75 – 3/4" 'D' SR, 11 – 1" 'D' SR, 2 1/2" x 1 3/4" x 20' x 22 1/2' RHAC

MISC.: Wellfiles do not indicate any major activity since COG acquisition

PROCEDURE

- MI & rack ~5800' 2 7/8" 6.5 ppf N-80 8rd EUE workstring tubing.
- MI & rack ~5100' 2 7/8" 6.5 ppf J-55 8rd EUE IPC injection tubing.
- "Double Truck" HW annulus prior to pulling operations.

1. MI RU PU. POOH w/ rod string to part. If necessary, fish rods & pump. POOH & LD rods & pump. HW/NGL tubing & annulus to clean-up.
2. ND WH. NU BOP. Release TAC set @ 5655' KBM. POOH & Tally LD 2 7/8" production tubing. **Note: Have production tubing cleaned and inspected & stored in yard.**
3. PU & Talley RIH w/ 6 1/8" MT bit, 7" scraper & SN on 2 7/8" WS to PBTD @ ± 5730' KB. **Note: If necessary, clean-out fill.**
4. POOH w/ 2 7/8" WS & LD Bit & Scraper.
5. MI RU WL Unit & pack-off. PU & RIH w/ perf gun. As per Reservoir Department, correlate to Open-hole Schlumberger logs (9/5/82) and Gearhart CBL (9/9/82) & perforate 8D interval w/ 4 spf @ 90° phasing as follows:

Formation	Interval	# feet	# Perfs
8D	5574' - 5590'	16	65

4. POOH & LD perf gun. RD WL Sheave. **Note: If necessary, keep WL on location and use to correlate DH tools.**
5. PU & RIH w/ 7" PKR / RBP w/ ball catcher & SN on 2 7/8" WS. Set RBP w/ BC @ 5595' KB – *correlate w/ WL.* PT RBP to 2000#. PUH & set PKR @ ± 5550'. – *if necessary, correlate w/ WL.* MO WL Unit.
6. MI RU stimulation company equipment. Acidize 8d perfs w/ 1500 gals 15% NEFe HCL w/ additives & 100 BS – spaced throughout. Flush w/ produced water to bottom perf. Record rates & pressures along with ISIP, 5, 10 & 15 minute SIP's. Formation should break-down @ ≤ 1600 psi. Pmx = 2000 psi. SI 30 minutes.
7. RU Swab. Swab back load. Swab test 8d perforations as per Reservoir request. RD Swab.
8. Release PKR. Retrieve RBP. POOH & LD 2 7/8" WS, SN & PKR/RBP.
9. PU & RIH w/ 2 7/8" injection assembly as follows (top → bottom) – KB correction of 13':

    - ± 156 jts 2 7/8" 6.5 ppf J-55 8rd EUE IPC tubing (± 4836')
    - 2 7/8" x 7" Baker model "AR-1" Snap-Set compression PKR (± 6.1') set @ ± 4850' KBM
    - ± 8 jts 2 7/8" 6.5 ppf J-55 8rd EUE IPC tubing (± 248')
    - 2 7/8" x 7" Baker model "R" PKR (± 7.58') set @ ± 5103' KBM - EOT @ ± 5111' KBM

10. Set Baker model "R" PKR @ ± 5103'. Set "AR-1" Snap-Set PKR at ± 4850'.
11. RU pump truck. Load annulus & PT to 1500 psi. Release PKR's & circulate hole w/ PKR FL (**NOTE: Annular capacity to bottom PKR is ~166 Bbls**). Reset PKR's. Load annulus w/ PKR FL. PT annulus to 1500 psi.
12. ND BOP. NU WH. Perform MIT as per BLM & Utah regulations.
13. Perform SRIT (Step Rate Injectivity Test) as requested by BLM permit to evaluate injection capacity and frac gradient of well. RD pump truck. RD MO PU.
14. Install injection line. Wait on injection permit approval.
15. After approval is received initiate injection at desired rates.
16. Monitor until rates stabilize. Run injection profile.

CITATION OIL & GAS CORP.
WALKER HOLLOW UNIT #72
3227' FSL, 503' FWL, (SW NW) Section 2 - T7S - R3E
UINTAH CO., UTAH
PROPOSED STATUS: ACTIVE WIW

API No: 43-047-31227

Elevation: 5339' GL
KB = 15' AGL

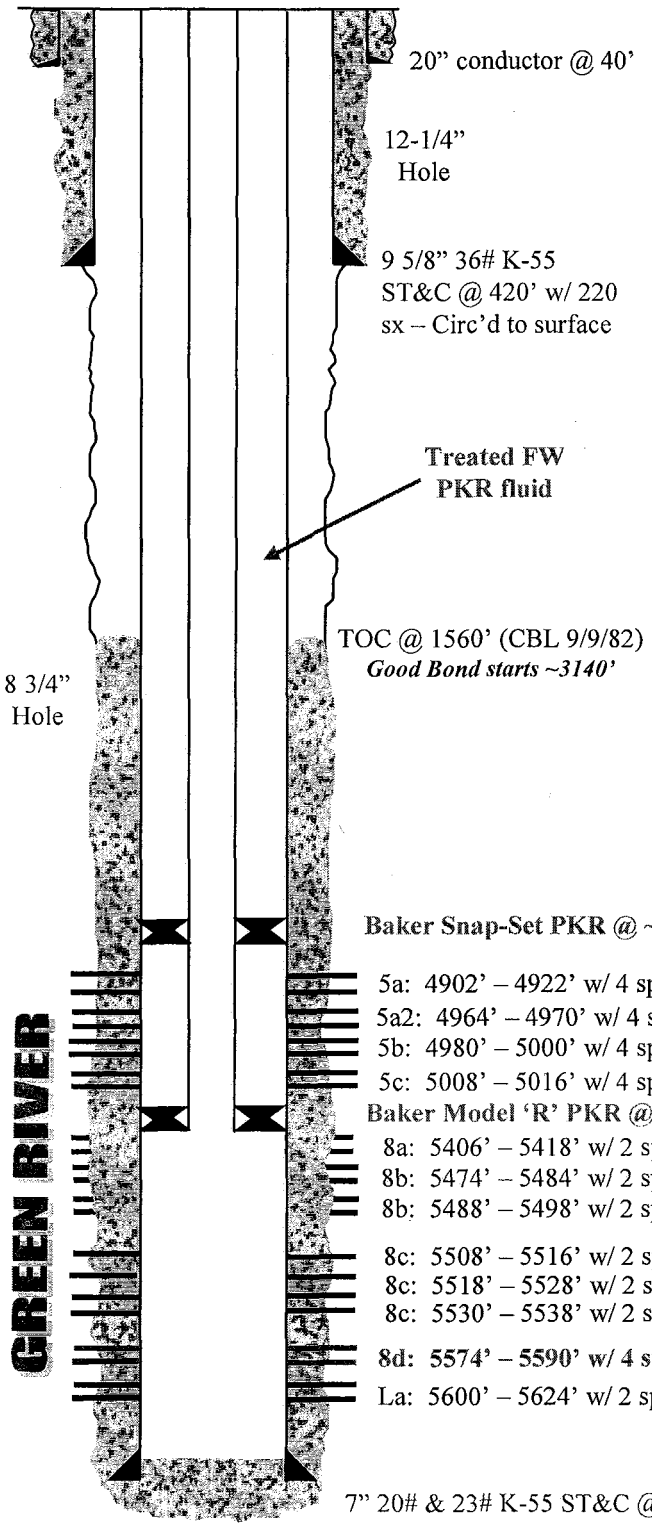

PBTD = 5730'
TD = 5790'

PROPOSED Completion Assembly			
Qty	Description	Length	Depth
	KB correction	13.00'	13.00'
~156 jts	2 7/8" 6.5# J-55 8rd EUE IPC tbg	4836.00'	4849.00'
1	2 7/8" x 7" Baker 'Snap-Set' PKR	6.10'	4855.10'
~8 jts	2 7/8" 6.5# J-55 8rd EUE IPC tbg	248.00'	5103.10'
1	2 7/8" x 7" Baker Model 'R' PKR w/ WLEG	7.58'	5110.68'

Updated: 10/20/08 - JTT

STATE OF UTAH
DEPARTMENT OF NATURAL RESOURCES
DIVISION OF OIL, GAS AND MINING

UIC FORM 1

APPLICATION FOR INJECTION WELL

Name of Operator Citation Oil & Gas Corp.	Utah Account Number N	Well Name and Number Walker Hollow Unit 72
Address of Operator P O Box 690688 CITY Houston STATE TX ZIP 77269	Phone Number (281) 517-7309	API Number 4304731227
Location of Well Footage : 3227' FSL & 503' FWL County : Uintah QQ, Section, Township, Range: SWNW 2 7S 23E State : UTAH		Field or Unit Name Walker Hollow Green River Lease Designation and Number ML-3175

Is this application for expansion of an existing project?	Yes ☑	No ☐
Will the proposed well be used for: Enhanced Recovery?	Yes ☑	No ☐
Disposal?	Yes ☐	No ☐
Storage?	Yes ☐	No ☐
Is this application for a new well to be drilled?	Yes ☐	No ☑
If this application is for an existing well, has a casing test been performed?	Yes ☐	No ☑

Date of test: _____

Proposed injection interval: from 4,902 to 5,624

Proposed maximum injection: rate 1,000 bpd pressure 1,144 psig

Proposed injection zone contains oil ☑, gas ☑, and / or fresh water ☐ within ½ mile of the well.

List of attachments: EPA Permit

ATTACH ADDITIONAL INFORMATION AS REQUIRED BY CURRENT
UTAH OIL AND GAS CONSERVATION GENERAL RULES

I hereby certify that this report is true and complete to the best of my knowledge.

Name (Please Print) Sharon Ward Title Permitting Manager

Signature Sharon Ward Date 1/5/2006

(5/2002)

EPA

UNDERGROUND INJECTION CONTROL PROGRAM

PERMIT

PREPARED: December 2007

Permit No. UT21119-07601

Class II Enhanced Oil Recovery Injection Well

Walker Hollow Unit 72
Uintah County, UT

Issued To

Citation Oil Gas Corporation
8223 Willow Place South
Suite 250
Houston, TX 77070

PART I. AUTHORIZATION TO CONSTRUCT AND OPERATE 2

PART II. SPECIFIC PERMIT CONDITIONS 3

Section A. WELL CONSTRUCTION REQUIREMENTS 3

1. Casing and Cement. 3
2. Injection Tubing and Packer. 3
3. Sampling and Monitoring Devices. 3
4. Well Logging and Testing 4
5. Postponement of Construction or Conversion 4
6. Workovers and Alterations 4

Section B. MECHANICAL INTEGRITY 4

1. Demonstration of Mechanical Integrity (MI). 5
2. Mechanical Integrity Test Methods and Criteria 5
3. Notification Prior to Testing. 5
4. Loss of Mechanical Integrity. 5

Section C. WELL OPERATION 6

1. Requirements Prior to Commencing Injection. 6
2. Injection Interval. 6
3. Injection Pressure Limitation 6
4. Injection Volume Limitation. 7
5. Injection Fluid Limitation. 7
6. Tubing-Casing Annulus (TCA) 7

Section D. MONITORING, RECORDKEEPING, AND REPORTING OF RESULTS 7

1. Monitoring Parameters, Frequency, Records and Reports. 7
2. Monitoring Methods. 7
3. Records Retention. 8
4. Annual Reports. 8

Section E. PLUGGING AND ABANDONMENT 9

1. Notification of Well Abandonment, Conversion or Closure. 9
2. Well Plugging Requirements 9
3. Approved Plugging and Abandonment Plan. 9
4. Forty Five (45) Day Notice of Plugging and Abandonment. 9
5. Plugging and Abandonment Report. 9
6. Inactive Wells. 10

PART III. CONDITIONS APPLICABLE TO ALL PERMITS 11

Section A. EFFECT OF PERMIT 11

Section B. CHANGES TO PERMIT CONDITIONS 11

1. Modification, Reissuance, or Termination. 11
2. Conversions. 11
3. Transfer of Permit. 11
4. Permittee Change of Address. 12
5. Construction Changes, Workovers, Logging and Testing Data 12

Section C. SEVERABILITY 12

Section D. CONFIDENTIALITY 12

Section E. GENERAL PERMIT REQUIREMENTS 12

1. Duty to Comply. 12
2. Duty to Reapply. 13
3. Need to Halt or Reduce Activity Not a Defense. 13
4. Duty to Mitigate. 13
5. Proper Operation and Maintenance. 13
6. Permit Actions. 13
7. Property Rights. 13
8. Duty to Provide Information. 13
9. Inspection and Entry. 13
10. Signatory Requirements. 14
11. Reporting Requirements. 14

Section F. FINANCIAL RESPONSIBILITY 15

1. Method of Providing Financial Responsibility. 15
2. Insolvency. 15

APPENDIX A - WELL CONSTRUCTION REQUIREMENTS A-1

APPENDIX B - LOGGING AND TESTING REQUIREMENTS B-1

APPENDIX C - OPERATING REQUIREMENTS C-1

APPENDIX D - MONITORING AND REPORTING REQUIREMENTS D-1

APPENDIX E - PLUGGING AND ABANDONMENT REQUIREMENTS E-1

Part I. AUTHORIZATION TO CONSTRUCT AND OPERATE

Under the authority of the Safe Drinking Water Act and Underground Injection Control (UIC) Program regulations of the U. S. Environmental Protection Agency (EPA) codified at Title 40 of the Code of Federal Regulations (40 CFR) Parts 2, 124, 144, 146, and 147, and according to the terms of this Permit,

Citation Oil & Gas Corporation
8223 Willow Place South
Suite 250
Houston, TX 77070

is authorized to construct and to operate the following Class II injection well or wells:

Walker Hollow Unit 72
3227 FSL 503 FWL, SWNW S2, T7S, R23E
Uintah County, UT

EPA regulates the injection of fluids into injection wells so that injection does not endanger underground sources of drinking water (USDWs). EPA UIC Permit conditions are based on authorities set forth at 40 CFR Parts 144 and 146, and address potential impacts to USDWs.

Under 40 CFR Part 144, Subpart D, certain conditions apply to all UIC Permits and may be incorporated either expressly or by reference. General permit conditions for which the content is mandatory and not subject to site-specific differences are not discussed in this document. Issuance of this Permit does not convey any property rights of any sort or any exclusive privilege, nor does it authorize injury to persons or property or invasion of other private rights, or any infringement of other Federal, State or local laws or regulations. (40 CFR §144.35) An EPA UIC Permit may be issued for the operating life of the injection well or project unless terminated for reasonable cause under 40 CFR §§144.39, 144.40 and 144.41, and may be reviewed at least once every five (5) years to determine if action is required under 40 CFR §144.36(a).

This Permit is issued for the life of the well(s) unless modified, revoked and reissued, or terminated under 40 CFR 144.39 or 144.40. This EPA Permit may be adopted, modified, revoked and reissued, or terminated if primary enforcement authority for a UIC Program is delegated to an Indian Tribe or State. Upon the effective date of delegation, reports, notifications, questions and other correspondence should be directed to the Indian Tribe or State Director.

Issue Date: JUN 26 2008 Effective Date JUN 26 2008

for Stephen S. Tuber
Assistant Regional Administrator*
Office of Partnerships and Regulatory Assistance

*NOTE: The person holding this title is referred to as the "Director" throughout this Permit.

PART II. SPECIFIC PERMIT CONDITIONS

Section A. WELL CONSTRUCTION REQUIREMENTS

These requirements represent the approved minimum construction standards for well casing and cement, injection tubing, and packer.

Details of the approved well construction plan are incorporated into this Permit as APPENDIX A. Changes to the approved plan that may occur during construction must be approved by the Director prior to being physically incorporated.

1. Casing and Cement.

The well or wells shall be cased and cemented to prevent the movement of fluids into or between underground sources of drinking water. The well casing and cement shall be designed for the life expectancy of the well and of the grade and size shown in APPENDIX A. Remedial cementing may be required if shown to be inadequate by cement bond log or other attempted demonstration of Part II (External) mechanical integrity.

2. Injection Tubing and Packer.

Injection tubing is required, and shall be run and set with a packer at or below the depth indicated in APPENDIX A. The packer setting depth may be changed provided it remains below the depth indicated in APPENDIX A and the Permittee provides notice and obtains the Director's approval for the change.

3. Sampling and Monitoring Devices.

The Permittee shall install and maintain in good operating condition:

(a) a "tap" at a conveniently accessible location on the injection flow line between the pump house or storage tanks and the injection well, isolated by shut-off valves, for collection of representative samples of the injected fluid; and

(b) one-half (1/2) inch female iron pipe fitting, isolated by shut-off valves and located at the wellhead at a conveniently accessible location, for the attachment of a pressure gauge capable of monitoring pressures ranging from normal operating pressures up to the Maximum Allowable Injection Pressure specified in APPENDIX C:

  (i) on the injection tubing; and

  (ii) on the tubing-casing annulus (TCA); and

(c) a pressure actuated shut-off device attached to the injection flow line set to shut-off the injection pump when or before the Maximum Allowable Injection Pressure (MAIP) specified in APPENDIX C is reached at the wellhead; and

(d) a non-resettable cumulative volume recorder attached to the injection line.

4. Well Logging and Testing

Well logging and testing requirements are found in APPENDIX B. The Permittee shall ensure the log and test requirements are performed within the time frames specified in APPENDIX B. Well logs and tests shall be performed according to current EPA-approved procedures. Well log and test results shall be submitted to the Director within sixty (60) days of completion of the logging or testing activity, and shall include a report describing the methods used during logging or testing and an interpretation of the test or log results.

5. Postponement of Construction or Conversion

The Permittee shall complete well construction within one year of the Effective Date of the Permit, or in the case of an Area Permit within one year of Authorization of the additional well. Authorization to construct and operate shall expire if the well has not been constructed within one year of the Effective Date of the Permit or Authorization and the Permit may be terminated under 40 CFR 144.40, unless the Permittee has notified the Director and requested an extension prior to expiration. Notification shall be in writing, and shall state the reasons for the delay and provide an estimated completion date. Once Authorization has expired under this part, the complete permit process including opportunity for public comment may be required before Authorization to construct and operate may be reissued.

6. Workovers and Alterations

Workovers and alterations shall meet all conditions of the Permit. Prior to beginning any addition or physical alteration to an injection well that may significantly affect the tubing, packer or casing, the Permittee shall give advance notice to the Director and obtain the Director's approval. The Permittee shall record all changes to well construction on a Well Rework Record (EPA Form 7520-12), and shall provide this and any other record of well workover, logging, or test data to EPA within sixty (60) days of completion of the activity.

A successful demonstration of Part I MI is required following the completion of any well workover or alteration which affects the casing, tubing, or packer. Injection operations shall not be resumed until the well has successfully demonstrated mechanical integrity and the Director has provided written approval to resume injection.

Section B. MECHANICAL INTEGRITY

The Permittee is required to ensure each injection well maintains mechanical integrity at all times. The Director, by written notice, may require the Permittee to comply with a schedule describing when mechanical integrity demonstrations shall be made.

An injection well has mechanical integrity if:

(a) There is no significant leak in the casing, tubing, or packer (Part I); and

(b) There is no significant fluid movement into an underground source of drinking water through vertical channels adjacent to the injection well bore (Part II).

1. Demonstration of Mechanical Integrity (MI).

The operator shall demonstrate MI prior to commencing injection and periodically thereafter. Well-specific conditions dictate the methods and the frequency for demonstrating MI and are discussed in the Statement of Basis. The logs and tests are designed to demonstrate both internal (Part I) and external (Part II) MI as described above. The conditions present at this well site warrant the methods and frequency required in Appendix B of this Permit.

In addition to these regularly scheduled demonstrations of MI, the operator shall demonstrate internal (Part I) MI after any workover which affects the tubing, packer or casing.

The Director may require additional or alternative tests if the results presented by the operator are not satisfactory to the Director to demonstrate there is no movement of fluid into or between USDWs resulting from injection activity. Results of MI tests shall be submitted to the Director as soon as possible but no later than sixty (60) days after the test is complete.

2. Mechanical Integrity Test Methods and Criteria

EPA-approved methods shall be used to demonstrate mechanical integrity. Ground Water Section Guidance No. 34 "Cement Bond Logging Techniques and Interpretation", Ground Water Section Guidance No. 37, "Demonstrating Part II (External) Mechanical Integrity for a Class II injection well permit", and Ground Water Section Guidance No. 39, "Pressure Testing Injection Wells for Part I (Internal) Mechanical Integrity" are available from EPA and will be provided upon request.

The Director may stipulate specific test methods and criteria best suited for a specific well construction and injection operation.

3. Notification Prior to Testing.

The Permittee shall notify the Director at least 30 days prior to any scheduled mechanical integrity test. The Director may allow a shorter notification period if it would be sufficient to enable EPA to witness the mechanical integrity test. Notification may be in the form of a yearly or quarterly schedule of planned mechanical integrity tests, or it may be on an individual basis.

4. Loss of Mechanical Integrity.

If the well fails to demonstrate mechanical integrity during a test, or a loss of mechanical integrity becomes evident during operation (such as presence of pressure in the TCA, water flowing at the surface, etc.), the Permittee shall notify the Director within 24 hours (see Part III Section E Paragraph 11(e) of this Permit) and the well shall be shut-in within 48 hours unless the Director requires immediate shut-in.

Within five days, the Permittee shall submit a follow-up written report that documents test results, repairs undertaken or a proposed remedial action plan.

Injection operations shall not be resumed until after the well has successfully been repaired and demonstrated mechanical integrity, and the Director has provided approval to resume injection.

Section C. WELL OPERATION

INJECTION BETWEEN THE OUTERMOST CASING PROTECTING UNDERGROUND SOURCES OF DRINKING WATER AND THE WELL BORE IS PROHIBITED.

Injection is approved under the following conditions:

1. Requirements Prior to Commencing Injection.

Well injection, including for new wells authorized by an Area Permit under 40 CFR 144.33 (c), may commence only after all well construction and pre-injection requirements herein have been met and approved. The Permittee may not commence injection until construction is complete, and

(a) The Permittee has submitted to the Director a notice of completion of construction and a completed EPA Form 7520-10 or 7520-12; all applicable logging and testing requirements of this Permit (see APPENDIX B) have been fulfilled and the records submitted to the Director; mechanical integrity pursuant to 40 CFR 146.8 and Part II Section B of this Permit has been demonstrated; and

(i) The Director has inspected or otherwise reviewed the new injection well and finds it is in compliance with the conditions of the Permit; or

(ii) The Permittee has not received notice from the Director of his or her intent to inspect or otherwise review the new injection well within 13 days of the date of the notice in Paragraph 1a, in which case prior inspection or review is waived and the Permittee may commence injection.

2. Injection Interval.

Injection is permitted only within the approved injection interval, listed in APPENDIX C. Additional individual injection perforations may be added provided that they remain within the approved injection interval and the Permittee provides notice to the Director in accordance with Part II, Section A, Paragraph 6.

3. Injection Pressure Limitation

(a) The permitted Maximum Allowable Injection Pressure (MAIP), measured at the wellhead, is found in APPENDIX C. Injection pressure shall not exceed the amount the Director determines is appropriate to ensure that injection does not initiate new fractures or propagate existing fractures in the confining zone adjacent to USDWs. In no case shall injection pressure cause the movement of injection or formation fluids into a USDW.

(b) The Permittee may request a change of the MAIP, or the MAIP may be increased or decreased by the Director in order to ensure that the requirements in Paragraph (a) above are fulfilled. The Permitee may be required to conduct a step rate injection test or other suitable test to provide information for determining the fracture pressure of the injection zone. Change of the permitted MAIP by the Director shall be by modification of this Permit and APPENDIX C.

4. Injection Volume Limitation.

Injection volume is limited to the total volume specified in APPENDIX C.

5. Injection Fluid Limitation.

Injected fluids are limited to those identified in 40 CFR 144.6(b)(2) as fluids used for enhanced recovery of oil or natural gas, including those which are brought to the surface in connection with conventional oil or natural gas production that may be commingled with waste waters from gas plants which are an integral part of production operations unless those waters are classified as a hazardous waste at the time of injection, pursuant to 40 CFR 144.6(b). Non-exempt wastes, including unused fracturing fluids or acids, gas plant cooling tower cleaning wastes, service wastes and vacuum truck wastes, are NOT approved for injection. This well is NOT approved for commercial brine injection, industrial waste fluid disposal or injection of hazardous waste as defined by CFR 40 Part 261. The Permittee shall provide a listing of the sources of injected fluids in accordance with the reporting requirements in Part II Section D Paragraph 4 and APPENDIX D of this Permit.

6. Tubing-Casing Annulus (TCA)

The tubing-casing annulus (TCA) shall be filled with water treated with a corrosion inhibitor, or other fluid approved by the Director. The TCA valve shall remain closed during normal operating conditions and the TCA pressure shall be maintained at zero (0) psi.

If TCA pressure cannot be maintained at zero (0) psi, the Permittee shall follow the procedures in Ground Water Section Guidance No. 35 "Procedures to follow when excessive annular pressure is observed on a well."

Section D. MONITORING, RECORDKEEPING, AND REPORTING OF RESULTS

1. Monitoring Parameters, Frequency, Records and Reports.

Monitoring parameters are specified in APPENDIX D. Pressure monitoring recordings shall be taken at the wellhead. The listed parameters are to be monitored, recorded and reported at the frequency indicated in APPENDIX D even during periods when the well is not operating.

Monitoring records must include:

(a) the date, time, exact place and the results of the observation, sampling, measurement, or analysis, and;

(b) the name of the individual(s) who performed the observation, sampling, measurement, or analysis, and;

(c) the analytical techniques or methods used for analysis.

2. Monitoring Methods.

(a) Monitoring observations, measurements, samples, etc. taken for the purpose of complying with these requirements shall be representative of the activity or condition being monitored.

(b) Methods used to monitor the nature of the injected fluids must comply with analytical methods cited and described in Table 1 of 40 CFR 136.3 or Appendix III of 40 CFR 261, or by other methods that have been approved in writing by the Director.

(c) Injection pressure, annulus pressure, injection rate, and cumulative injected volumes shall be observed and recorded at the wellhead under normal operating conditions, and all parameters shall be observed simultaneously to provide a clear depiction of well operation.

(d) Pressures are to be measured in pounds per square inch (psi).

(e) Fluid volumes are to be measured in standard oil field barrels (bbl).

(f) Fluid rates are to be measured in barrels per day (bbl/day).

3. Records Retention.

(a) Records of calibration and maintenance, and all original strip chart recordings for continuous monitoring instrumentation, copies of all reports required by this permit, and records of all data used to complete the application for this permit shall be retained for a period of AT LEAST THREE (3) YEARS from the date of the sample, measurement, report, or application. This period may be extended anytime prior to its expiration by request of the Director.

(b) Records of the nature and composition of all injected fluids must be retained until three (3) years after the completion of any plugging and abandonment (P&A) procedures specified under 40 CFR 144.52(a)(6) or under Part 146 Subpart G, as appropriate. The Director may require the Permittee to deliver the records to the Director at the conclusion of the retention period. The Permittee shall continue to retain the records after the three (3) year retention period unless the Permittee delivers the records to the Director or obtains written approval from the Director to discard the records.

(c) The Permittee shall retain records at the location designated in APPENDIX D.

4. Annual Reports.

Whether the well is operating or not, the Permittee shall submit an Annual Report to the Director that summarizes the results of the monitoring required by Part II Section D and APPENDIX D.

The first Annual Report shall cover the period from the effective date of the Permit through December 31 of that year. Subsequent Annual Reports shall cover the period from January 1 through December 31 of the reporting year. Annual Reports shall be submitted by February 15 of the year following data collection. EPA Form 7520-11 may be copied and shall be used to submit the Annual Report, however, the monitoring requirements specified in this Permit are mandatory even if EPA Form 7520-11 indicates otherwise.

Section E. PLUGGING AND ABANDONMENT

1. Notification of Well Abandonment, Conversion or Closure.

The Permittee shall notify the Director in writing at least forty-five (45) days prior to: 1) plugging and abandoning an injection well, 2) converting to a non-injection well, and 3) in the case of an Area Permit, before closure of the project.

2. Well Plugging Requirements

Prior to abandonment, the injection well shall be plugged with cement in a manner which isolates the injection zone and prevents the movement of fluids into or between underground sources of drinking water, and in accordance with 40 CFR 146.10 and other applicable Federal, State or local law or regulations. Tubing, packer and other downhole apparatus shall be removed. Cement with additives such as accelerators and retarders that control or enhance cement properties may be used for plugs; however, volume-extending additives and gel cements are not approved for plug use. Plug placement shall be verified by tagging. Plugging gel of at least 9.6 lb/gal shall be placed between all plugs. A minimum 50 ft surface plug shall be set inside and outside of the surface casing to seal pathways for fluid migration into the subsurface. The Plugging Record must be certified as accurate and complete by the person responsible for the plugging operation. Prior to placement of the cement plug(s) the well shall be in a state of static equilibrium with the mud weight equalized top to bottom, either by circulating the mud in the well at least once or by a comparable method prescribed by the Director.

3. Approved Plugging and Abandonment Plan.

The approved plugging and abandonment plan is incorporated into this Permit as APPENDIX E. Changes to the approved plugging and abandonment plan must be approved by the Director prior to beginning plugging operations. The Director also may require revision of the approved plugging and abandonment plan at any time prior to plugging the well.

4. Forty Five (45) Day Notice of Plugging and Abandonment.

The Permittee shall notify the Director at least forty-five (45) days prior to plugging and abandoning a well and provide notice of any anticipated change to the approved plugging and abanonment plan.

5. Plugging and Abandonment Report.

Within sixty (60) days after plugging a well, the Permittee shall submit a report (EPA Form 7520-13) to the Director. The plugging report shall be certified as accurate by the person who performed the plugging operation. Such report shall consist of either:

(a) A statement that the well was plugged in accordance with the approved plugging and abandonment plan; or

(b) Where actual plugging differed from the approved plugging and abandonment plan, an updated version of the plan, on the form supplied by the Director, specifying the differences.

6. Inactive Wells.

After any period of two years during which there is no injection the Permittee shall plug and abandon the well in accordance with Part II Section E Paragraph 2 of this Permit unless the Permittee:

(a) Provides written notice to the Director;

(b) Describes the actions or procedures the Permittee will take to ensure that the well will not endanger USDWs during the period of inactivity. These actions and procedures shall include compliance with mechanical integrity demonstration, Financial Responsibility and all other permit requirements designed to protect USDWs; and

(c) Receives written notice by the Director temporarily waiving plugging and abandonment requirements.

PART III. CONDITIONS APPLICABLE TO ALL PERMITS

Section A. EFFECT OF PERMIT

The Permittee is allowed to engage in underground injection in accordance with the conditions of this Permit. The Permittee shall not construct, operate, maintain, convert, plug, abandon, or conduct any other activity in a manner that allows the movement of fluid containing any contaminant into underground sources of drinking water, if the presence of that contaminant may cause a violation of any primary drinking water regulation under 40 CFR 142 or may otherwise adversely affect the health of persons. Any underground injection activity not authorized by this Permit or by rule is prohibited. Issuance of this Permit does not convey property rights of any sort or any exclusive privilege; nor does it authorize any injury to persons or property, any invasion of other private rights, or any infringement of any other Federal, State or local law or regulations. Compliance with the terms of this Permit does not constitute a defense to any enforcement action brought under the provisions of Section 1431 of the Safe Drinking Water Act (SDWA) or any other law governing protection of public health or the environment, for any imminent and substantial endangerment to human health or the environment, nor does it serve as a shield to the Permittee's independent obligation to comply with all UIC regulations. Nothing in this Permit relieves the Permittee of any duties under applicable regulations.

Section B. CHANGES TO PERMIT CONDITIONS

1. Modification, Reissuance, or Termination.

The Director may, for cause or upon a request from the Permittee, modify, revoke and reissue, or terminate this Permit in accordance with 40 CFR 124.5, 144.12, 144.39, and 144.40. Also, this Permit is subject to minor modification for causes as specified in 40 CFR 144.41. The filing of a request for modification, revocation and reissuance, termination, or the notification of planned changes or anticipated noncompliance on the part of the Permittee does not stay the applicability or enforceability of any condition of this Permit.

2. Conversions.

The Director may, for cause or upon a written request from the Permittee, allow conversion of the well from a Class II injection well to a non-Class II well. Conversion may not proceed until the Permittee receives written approval from the Director. Conditions of such conversion may include but are not limited to, approval of the proposed well rework, follow up demonstration of mechanical integrity, well-specific monitoring and reporting following the conversion, and demonstration of practical use of the converted configuration.

3. Transfer of Permit.

Under 40 CFR 144.38, this Permit is transferable provided the current Permittee notifies the Director at least thirty (30) days in advance of the proposed transfer date (EPA Form 7520-7) and provides a written agreement between the existing and new Permittees containing a specific date for transfer of Permit responsibility, coverage and liability between them. The notice shall adequately demonstrate that the financial responsibility requirements of 40 CFR 144.52(a)(7) will be met by the new Permittee. The Director may require modification or revocation and reissuance of the Permit to change the name of the Permittee and incorporate such other requirements as may be necessary under the Safe Drinking Water Act; in some cases, modification or revocation and reissuance is mandatory.

4. Permittee Change of Address.

Upon the Permittee's change of address, or whenever the operator changes the address where monitoring records are kept, the Permittee must provide written notice to the Director within 30 days.

5. Construction Changes, Workovers, Logging and Testing Data

The Permittee shall give advance notice to the Director, and shall obtain the Director's written approval prior to any physical alterations or additions to the permitted facility. Alterations or workovers shall meet all conditions as set forth in this permit. The Permittee shall record any changes to the well construction on a Well Rework Record (EPA Form 7520-12), and shall provide this and any other record of well workovers, logging , or test data to EPA within sixty (60) days of completion of the activity.

Following the completion of any well workovers or alterations which affect the casing, tubing, or packer, a successful demonstration of mechanical integrity (Part III, Section F of this Permit) shall be made, and written authorization from the Director received, prior to resuming injection activities.

Section C. SEVERABILITY

The Provisions of this Permit are severable, and if any provision of this Permit or the application of any provision of this Permit to any circumstance, is held invalid, the application of such provision to other circumstances, and the remainder of this Permit shall not be affected thereby.

Section D. CONFIDENTIALITY

In accordance with 40 CFR Part 2 and 40 CFR 144.5, information submitted to EPA pursuant to this Permit may be claimed as confidential by the submitter. Any such claim must be asserted at the time of submission by stamping the words "confidential business information" on each page containing such information. If no claim is made at the time of submission, EPA may make the information available to the public without further notice. If a claim is asserted, the validity of the claim will be assessed in accordance with the procedures in 40 CFR Part 2 (Public Information). Claims of confidentiality for the following information will be denied:

- The name and address of the Permittee, and
- information which deals with the existence, absence or level of contaminants in drinking water.

Section E. GENERAL PERMIT REQUIREMENTS

1. Duty to Comply.

The Permittee must comply with all conditions of this Permit. Any noncompliance constitutes a violation of the Safe Drinking Water Act (SDWA) and is grounds for enforcement action; for Permit termination, revocation and reissuance, or modification; or for denial of a permit renewal application; except that the Permittee need not comply with the provisions of this Permit to the extent and for the duration such noncompliance is authorized in an emergency permit under 40 CFR 144.34. All violations of the SDWA may subject the Permittee to penalties and/or criminal prosecution as specified in Section 1423 of the SDWA.

2. *Duty to Reapply.*

If the Permittee wishes to continue an activity regulated by this Permit after the expiration date of this Permit, under 40 CFR 144.37 the Permittee must apply for a new permit prior to the expiration date.

3. *Need to Halt or Reduce Activity Not a Defense.*

It shall not be a defense for a Permittee in an enforcement action that it would have been necessary to halt or reduce the permitted activity in order to maintain compliance with the conditions of this Permit.

4. *Duty to Mitigate.*

The Permittee shall take all reasonable steps to minimize or correct any adverse impact on the environment resulting from noncompliance with this Permit.

5. *Proper Operation and Maintenance.*

The Permittee shall at all times properly operate and maintain all facilities and systems of treatment and control (and related appurtenances) which are installed or used by the Permittee to achieve compliance with the conditions of this Permit. Proper operation and maintenance includes effective performance, adequate funding, adequate operator staffing and training, and adequate laboratory and process controls, including appropriate quality assurance procedures. This provision requires the operation of back-up or auxiliary facilities or similar systems only when necessary to achieve compliance with the conditions of this Permit.

6. *Permit Actions.*

This Permit may be modified, revoked and reissued or teminated for cause. The filing of a request by the Permittee for a permit modification, revocation and reissuance, or termination, or a notification of planned changes or anticipated noncompliance, does not stay any permit condition.

7. *Property Rights.*

This Permit does not convey any property rights of any sort, or any exclusive privilege.

8. *Duty to Provide Information.*

The Permittee shall furnish to the Director, within a time specified, any information which the Director may request to determine whether cause exists for modifying, revoking and reissuing, or terminating this permit, or to determine compliance with this permit. The Permittee shall also furnish to the Director, upon request, copies of records required to be kept by this Permit. The Permittee is required to submit any information required by this Permit or by the Director to the mailing address designated in writing by the Director.

9. *Inspection and Entry.*

The Permittee shall allow the Director, or an authorized representative, upon the presentation of credentials and other documents as may be required by law, to:

(a) Enter upon the Permittee's premises where a regulated facility or activity is located or conducted, or where records must be kept under the conditions of this Permit;

(b) Have access to and copy, at reasonable times, any records that must be kept under the conditions of this Permit;

(c) Inspect at reasonable times any facilities, equipment (including monitoring and control equipment), practices, or operations regulated or required under this Permit; and,

(d) Sample or monitor at reasonable times, for the purpose of assuring permit compliance or as otherwise authorized by the SDWA, any substances or parameters at any location.

10. Signatory Requirements.

All applications, reports or other information submitted to the Director shall be signed and certified according to 40 CFR 144.32. This section explains the requirements for persons duly authorized to sign documents, and provides wording for required certification.

11. Reporting Requirements.

(a) Planned changes. The Permittee shall give notice to the Director as soon as possible of any planned changes, physical alterations or additions to the permitted facility, and prior to commencing such changes.

(b) Anticipated noncompliance. The Permittee shall give advance notice to the Director of any planned changes in the permitted facility or activity which may result in noncompliance with permit requirements.

(c) Monitoring Reports. Monitoring results shall be reported at the intervals specified in this Permit.

(d) Compliance schedules. Reports of compliance or noncompliance with, or any progress reports on, interim and final requirements contained in any compliance schedule of this Permit shall be submitted no later than 30 days following each schedule date.

(e) Twenty-four hour reporting. The Permittee shall report to the Director any noncompliance which may endanger human health or the environment, including:

(i) Any monitoring or other information which indicates that any contaminant may cause endangerment to a USDW; or

(ii) Any noncompliance with a permit condition or malfunction of the injection system which may cause fluid migration into or between USDWs.

Information shall be provided, either directly or by leaving a message, within twenty-four (24) hours from the time the permittee becomes aware of the circumstances by telephoning (800) 227-8917 and requesting EPA Region VIII UIC Program Compliance and Technical Enforcement Director, or by contacting the EPA Region VIII Emergency Operations Center at (303) 293-1788.

In addition, a follow up written report shall be provided to the Director within five (5) days of the time the Permittee becomes aware of the circumstances. The written submission shall contain a description of the noncompliance and its cause, the period of noncompliance including exact dates and times, and if the noncompliance has not been corrected the anticipated time it is expected to continue; and the steps taken or planned to reduce, eliminate, and prevent recurrence of the noncompliance.

(f) Oil Spill and Chemical Release Reporting: The Permittee shall comply with all reporting requirements related to the occurence of oil spills and chemical releases by contacting the National Response Center (NRC) at (800) 424-8802, (202) 267-2675, or through the NRC website http://www.nrc.uscg.mil/index.htm.

(g) Other Noncompliance. The Permittee shall report all instances of noncompliance not reported under paragraphs Part III, Section E Paragraph 11(b) or Section E, Paragraph 11(e) at the time the monitoring reports are submitted. The reports shall contain the information listed in Paragraph 11(e) of this Section.

(h) Other information. Where the Permittee becomes aware that it failed to submit any relevant facts in the permit application, or submitted incorrect information in a permit application or in any report to the Director, the Permittee shall promptly submit such facts or information to the Director.

Section F. FINANCIAL RESPONSIBILITY

1. Method of Providing Financial Responsibility.

The Permittee shall maintain continuous compliance with the requirement to maintain financial responsibility and resources to close, plug, and abandon the underground injection well(s). No substitution of a demonstration of financial responsibility shall become effective until the Permittee receives written notification from the Director that the alternative demonstration of financial responsibility is acceptable. The Director may, on a periodic basis, require the holder of a permit to revise the estimate of the resources needed to plug and abandon the well to reflect changes in such costs and may require the Permittee to provide a revised demonstration of financial responsibility.

2. Insolvency.

In the event of:

(a) the bankruptcy of the trustee or issuing institution of the financial mechanism; or

(b) suspension or revocation of the authority of the trustee institution to act as trustee; or

(c) the institution issuing the financial mechanism losing its authority to issue such an instrument

the Permittee must notify the Director in writing, within ten (10) business days, and the Permittee must establish other financial assurance or liability coverage acceptable to the Director within sixty (60) days after any event specified in (a), (b), or (c) above.

The Permittee must also notify the Director by certified mail of the commencement of voluntary or involuntary proceedings under Title 11 (Bankruptcy), U.S. Code naming the owner or operator as debtor, within ten (10) business days after the commencement of the proceeding. A guarantor, if named as debtor of a corporate guarantee, must make such a notification as required under the terms of the guarantee.

APPENDIX A

WELL CONSTRUCTION REQUIREMENTS

The WHU #72 well was drilled to a total depth (TD) of 5790' with a 20" casing cemented from 40' to surface with 250 sx of Class H cement. The plug back total depth (PBTD) is 5727'.

Surface Casing: 9 5/8" 36# K-55 ST&C casing was set at 420' in a 12 1/4" hole and cemented to surface with 200 sx 50/50 poz and 50 sx Class H cement.

Production Casing: 7" 20# (0'-4300') and 23# K-55 ST&C casing was set in an 8 3/4 hole at 5780' with 1275 sx of Class H cement. The CBL identifies the TOC at approximately 1560'.

Perforations: The schematic diagram shows the existing injection perforations in the Green River Formation.

The conversion program includes installing a tubing straddle packer assembly to allow injection into the 8a, 8b, 8c and DL1a formations and allow future use in the 5a, 5a2, and 5b formations. The lower packer will be set at approximately 5100'. The upper packer will be set no higher than 100 feet of the top open perforation.

CITATION OIL & GAS CORP.
WALKER HOLLOW UNIT #72
3227' FSL, 503' FWL, Section 2-7S-23E
UINTAH CO., UTAH
Proposed Injection

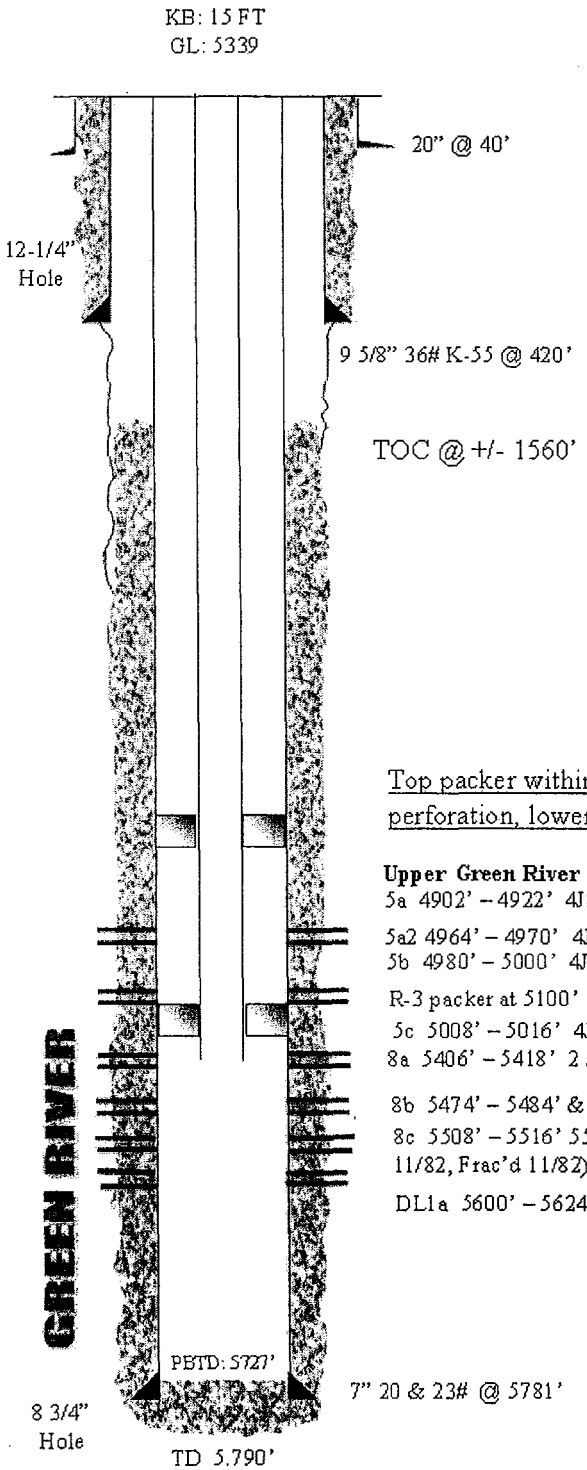

Top packer within 100' of top open perforation, lower packer at ~5100'

Upper Green River
5a 4902' – 4922' 4JSPF (Compl & Acid 11/82)
5a2 4964' – 4970' 4JSPF (Compl & Acid 11/82)
5b 4980' – 5000' 4JSPF (Compl & Acid 11/82)
R-3 packer at 5100'
5c 5008' – 5016' 4JSPF (Compl & Acid 11/82)
8a 5406' – 5418' 2 JSPF (Compl & Acid & SQZ 11/82)
8b 5474' – 5484' & 5488' – 5498' 2 JSPF (Compl & Acid & SQZ 11/82)
8c 5508' – 5516' 5518' – 5528' & 5530' – 5538' 2 JSPF (Compl & Acid: 11/82, Frac'd 11/82)
DL1a 5600' – 5624' 2 JSPF (Compl & Acid: 11/82, Frac'd 11/82)

Updated: 11/29/05 - CSS

UT21119-07601_Constr_WHU72.jpg

APPENDIX B

LOGGING AND TESTING REQUIREMENTS

Logs.
Logs will be conducted according to current UIC guidance. It is the responsibility of the Permittee to obtain and use guidance prior to conducting any well logging required as a condition of this permit.

NO LOGGING REQUIREMENTS

Tests.
Tests will be conducted according to current UIC guidance. It is the responsibility of the Permittee to obtain and use guidance prior to conducting any well test required as a condition of this permit.

Injection for the purpose of conducting required tests is authorized prior to receiving authorization to inject.

WELL NAME: Walker Hollow Unit 72

TYPE OF TEST	DATE DUE
Standard Annulus Pressure	Prior to receiving authorization to inject and at least once every five years after the last successful demonstration of Part I Mechanical Integrity.
Pore Pressure	Prior to receiving authorization to inject.

APPENDIX C

OPERATING REQUIREMENTS

MAXIMUM ALLOWABLE INJECTION PRESSURE:

Maximum Allowable Injection Pressure (MAIP) as measured at the surface shall not exceed the pressure(s) listed below.

WELL NAME	MAXIMUM ALLOWED INJECTION PRESSURE (psi) ZONE 1 (Upper)
Walker Hollow Unit 72	1,140

INJECTION INTERVAL(S):

Injection is permitted only within the approved injection interval listed below. Injection perforations may be altered provided they remain within the approved injection interval and the Permittee provides notice to the Director in accordance with Part II, Section A, Paragraph 6. Specific injection perforations can be found in Appendix A.

WELL NAME: Walker Hollow Unit 72

FORMATION NAME	APPROVED INJECTION INTERVAL (KB, ft) TOP - BOTTOM	FRACTURE GRADIENT (psi/ft)
Green River (Evacuation Creek)	3,350.00 - 4,562.00	
Green River (Parachute Creek)	4,562.00 - 4,851.00	
Green River (Garden Gulch)	4,851.00 - 5,645.00	0.668

ANNULUS PRESSURE:

The annulus pressure shall be maintained at zero (0) psi as measured at the wellhead. If this pressure cannot be maintained, the Permittee shall follow the procedures listed under Part II, Section C. 6. of this permit.

MAXIMUM INJECTION VOLUME:

There is no limitation on the number of barrels per day (bbls/day) of water that shall be injected into this well, provided further that in no case shall injection pressure exceed that limit shown in Appendix C.

APPENDIX D

MONITORING AND REPORTING PARAMETERS

This is a listing of the parameters required to be observed, recorded, and reported. Refer to the permit Part II, Section D, for detailed requirements for observing, recording, and reporting these parameters.

OBSERVE MONTHLY AND RECORD AT LEAST ONCE EVERY THIRTY DAYS	
OBSERVE AND RECORD	Injection pressure (psig)
	Annulus pressure(s) (psig)
	Injection rate (bbl/day)
	Fluid volume injected since the well began injecting (bbls)

ANNUALLY	
ANALYZE	Injected fluid total dissolved solids (mg/l)
	Injected fluid specific gravity
	Injected fluid specific conductivity
	Injected fluid pH

ANNUALLY	
REPORT	Each month's maximum and averaged injection pressures (psig)
	Each month's maximum and minimum annulus pressure(s) (psig)
	Each month's injected volume (bbl)
	Fluid volume injected since the well began injecting (bbl)
	Written results of annual injected fluid analysis
	Sources of all fluids injected during the year

In addition to these items, additional Logging and Testing results may be required periodically. For a list of those items and their due dates, please refer to APPENDIX B - LOGGING AND TESTING REQUIREMENTS.

Records of all monitoring activities must be retained and made available for inspection at the following location:

8223 Willow Place South Dr.

Vernal, UT 77070

APPENDIX E

PLUGGING AND ABANDONMENT REQUIREMENTS

Prior to plugging the well, run a Mechanical Integrity Test, pull tubing and packer, and repair any casing leaks.

At a minimum, the following plugs are required:

PLUG NO. 1: Set a Cast Iron Cement Retainer (CICR) at approximately 5350 feet and pump approximately 50 sx of cement below the retainer. Place at least 20 feet of cement on top of CICR.

PLUG NO. 2: Set a CICR approximately 50 feet above uppermost perforation and pump approximately 50 sx of cement below the retainer. Place at least 20 feet of cement on top of CICR.

PLUG NO. 3: Set a cement plug inside 7 inch casing from approximately 3300 feet to 3400 feet (top of confining zone).

PLUG NO. 4: Set a cement plug inside and outside the 7 inch casing from approximately 350 feet to 485 feet across the surface casing footing.

PLUG NO. 5: Set a surface plug inside and outside the 7 inch casing at least 50 feet from surface.

NOTE: Plug placement must be verified by tagging the top of the plug after the cement has had adequate time to set

CITATION OIL & GAS CORP.
WALKER HOLLOW UNIT #72
3227' FSL, 503' FWL, Section 2-7S-23E
UINTAH, UTAH
P&A Proposal

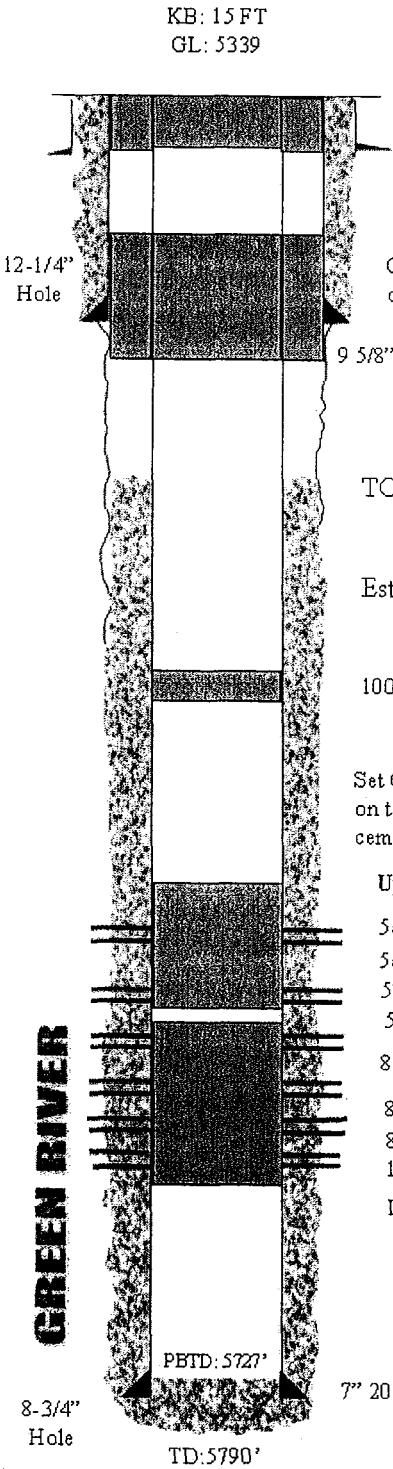

Updated: 11/29/05 - CSS

UT21119-07601_P&A_WHU72.jpg

STATEMENT OF BASIS

CITATION OIL & GAS CORPORATION
WALKER HOLLOW UNIT 72
UINTAH COUNTY, UT

EPA PERMIT NO. UT21119-07601

CONTACT: Wendy Cheung
U. S. Environmental Protection Agency
Ground Water Program, 8P-W-GW
1595 Wynkoop Street
Denver, Colorado 80202-1129
Telephone: 1-800-227-8917 ext. 312-6242

This STATEMENT OF BASIS gives the derivation of site-specific UIC Permit conditions and reasons for them. Referenced sections and conditions correspond to sections and conditions in the Permit.

EPA UIC permits regulate the injection of fluids into underground injection wells so that the injection does not endanger underground sources of drinking water. EPA UIC permit conditions are based upon the authorities set forth in regulatory provisions at 40 CFR Parts 144 and 146, and address potential impacts to underground sources of drinking water. Under 40 CFR 144.35 Issuance of this permit does not convey any property rights of any sort or any exclusive privilege, nor authorize injury to persons or property of invasion of other private rights, or any infringement of other Federal, State or local laws or regulations. Under 40 CFR 144 Subpart D, certain conditions apply to all UIC Permits and may be incorporated either expressly or by reference. General Permit conditions for which the content is mandatory and not subject to site-specific differences (40 CFR Parts 144, 146 and 147) are not discussed in this document.

Upon the Effective Date when issued, the Permit authorizes the construction and operation of injection wells so that the injection does not endanger underground sources of drinking water, governed by the conditions specified in the Permit. The Permit is issued for the operating life of the injection well or project unless terminated for reasonable cause under 40 CFR 144.39, 144.40 and 144.41. The Permit is subject to EPA review at least once every five (5) years to determine if action is required under 40 CFR 144.36(a).

PART I. General Information and Description of Facility

Citation Oil & Gas Corporation
8223 Willow Place South
Suite 250
Houston, TX 77070

on

January 8, 2007

submitted an application for an Underground Injection Control (UIC) Program Permit or Permit Modification for the following injection well or wells:

Walker Hollow Unit 72
3227 FSL 503 FWL, SWNW S2, T7S, R23E
Uintah County, UT

Regulations specific to Uintah-Ouray Indian Reservation injection wells are found at 40 CFR 147 Subpart TT.

The application, including the required information and data necessary to issue or modify a UIC Permit in accordance with 40 CFR Parts 144, 146 and 147, was reviewed and determined by EPA to be complete.

The Permit will expire upon delegation of primary enforcement responsibility (primacy) for applicable portions of the UIC Program to the Ute Indian Tribe or the State of Utah unless the delegated agency has the authority and chooses to adopt and enforce this Permit as a Tribal or State Permit.

TABLE 1.1 shows the status of the well or wells as "New", "Existing", or "Conversion" and for Existing shows the original date of injection operation. Well authorization "by rule" under 40 CFR Part 144 Subpart C expires automatically on the Effective Date of an issued UIC Permit.

TABLE 1.1

WELL STATUS / DATE OF OPERATION

CONVERSION WELLS		
Well Name	**Well Status**	**Date of Operation**
Walker Hollow Unit 72	Conversion	N/A

PART II. Permit Considerations (40 CFR 146.24)

Hydrogeologic Setting

The well is located in the Walker Hollow Unit near the center of the broad, gently northward dipping south flank of the Uinta Basin. The Uinta Basin is a topographic and structural trough encompassing an area of more than 9,300 square miles (14,900 km2). The majority of the Basin is located in northeastern Utah, with a small portion in northwest Colorado. The basin is bounded on the north by the east-west-trending Uinta Mountains and the Uinta Basin boundary fault and a gently dipping south flank. The basin is an asymmetrical syncline with the deepest end in the north central. The basin was formed in Paleocene to Eocene time creating a large area of internal drainage which was filled by the ancestral Lake Uinta. The lacustrine, or fresh water lake-formed, sediments deposited in and around Lake Uinta make up the Uinta and Green River Formations.

The Uinta Formation generally consists of 5' to 20' thick brown lenticular fluvial sandstone and interbedded varicolored shales. The Uinta is underlain by the Green River Formation which consists of interbedded lake (lacustrine) margin sandstones, limestones and shale beds. The cyclic nature of Green River deposition resulted in numerous stacked deltaic deposits. The Green River Formation is a highly oil-productive formation from which over 500 billion barrels have been produced. Several distinct geologic hydrocarbon productive members within the Green River formation are identified as the Evacuation Creek, Parachute Creek, Garden Gulch, Douglas Creek and Basal Carbonate Members. The Basal Carbonate Member is the basal unit of the Green River Formation in the Walker Hollow Unit.

Geologic Setting (TABLE 2.1)

TABLE 2.1
GEOLOGIC SETTING
Walker Hollow Unit 72

Formation Name	Top (ft)	Base (ft)	TDS (mg/l)	Lithology
Uinta	0	3,148	< 10,000	sandstone, siltstone, and shale
Green River (Evacuation Creek)	3,148	4,562	< 10,000	sandstone, siltstone, and shale
Green River (Parachute Creek)	4,562	4,851	< 10,000	sandstone, siltstone, and shale
Green River (Garden Gulch)	4,851	5,645	< 10,000	sandstone, siltstone, and shale
Green River (Douglas Creek)	5,645	5,790	< 10,000	sandstone, siltstone, and shale

Proposed Injection Zone(s) (TABLE 2.2)

An injection zone is a geological formation, group of formations, or part of a formation that receives fluids through a well. The proposed injection zones are listed in TABLE 2.2.

Injection will occur into an injection zone that is separated from USDWs by a confining zone which is free of known open faults or fractures within the Area of Review.

The proposed injection is into eight sandstone sequences (DU 5A, DU 5A2, DU 5B, DU 5C, DU 8A, DU 8B, DU 8C, DL 1A) within the Garden Gulch Member of the Green River Formation between the depths of 4902 feet to 5624 feet. The permitted injection zones consist of formations or portions of formations below the confining zone; the basal portion of Evacuation Creek, the

Parachute Creek, and the Garden Gulch.

TABLE 2.2
INJECTION ZONES
Walker Hollow Unit 72

Formation Name	Top (ft)	Base (ft)	TDS (mg/l)	Fracture Gradient (psi/ft)	Porosity	Exempted?*
Green River (Evacuation Creek)	3,350	4,562	< 10,000			E
Green River (Parachute Creek)	4,562	4,851	< 10,000			E
Green River (Garden Gulch)	4,851	5,645	< 10,000	0.668		E

* **C - Currently Exempted**
E - Previously Exempted
P - Proposed Exemption
N/A - Not Applicable

Confining Zone(s) (TABLE 2.3)

A confining zone is a geological formation, part of a formation, or a group of formations that limits fluid movement above the injection zone. The confining zone or zones are listed in TABLE 2.3.

The Garden Gulch Member of the Green River Formation consists of a series of interbedded shale and sandstone of relatively thin thickness (< 50 feet). An acceptable zone was identified in the Evacuation Creek Member between 3350 feet and 3500 feet that also had adequate cement bond behind the longstring casing. In this region, the lithology is predominantly shale with some sandstone and is above the top of oil shows (degraded oil).

TABLE 2.3
CONFINING ZONES
Walker Hollow Unit 72

Formation Name	Formation Lithology	Top (ft)	Base (ft)
Green River (Evacuation Creek)	sandstone, siltstone, and shale	3,350	3,500

Underground Sources of Drinking Water (USDWs) (TABLE 2.4)

Aquifers or the portions thereof which contain less than 10,000 mg/l total dissolved solids (TDS) and are being or could in the future be used as a source of drinking water are considered to be USDWs. The USDWs in the area of this facility are identified in TABLE 2.4.

The Uinta-Animas aquifer in the Uinta Basin is present in water-yielding beds of sandstone, conglomerate, and siltstone of the Uinta Formation and Green River Formation of northeastern Utah. Site specific TDS data in Unita Fomation at the well is unknown, however dissolved solids concentrations in water in the Uinta-Animas aquifer in the Uinta Basin generally range from 500 to

3,000 milligrams per liter.

Water analysis of the Green River Formation from production wells indicates that the total dissolved solids (TDS) can be as low as 2000 TDS (USGS Produced Water Database http://energy.cr.usgs.gov/prov/prodwat/data2.htm).

The Green River Formation has been exempted in the Walker Hollow Unit, therefore the lowermost USDW is the Uinta Formation.

TABLE 2.4
UNDERGROUND SOURCES OF DRINKING WATER (USDW)
Walker Hollow Unit 72

Formation Name	Formation Lithology	Top (ft)	Base (ft)	TDS (mg/l)
Uinta	sandstone, siltstone, and shale	0	3,148	< 10,000

PART III. Well Construction (40 CFR 146.22)

TABLE 3.1
WELL CONSTRUCTION REQUIREMENTS
Walker Hollow Unit 72

Casing Type	Hole Size (in)	Casing Size (in)	Cased Interval (ft)	Cemented Interval (ft)
Surface	12.25	9.63	0 - 420	0 - 420
Longstring	8.75	7.00	0 - 5,780	1,560 - 5,780
Other		20.00	0 - 40	0 - 40

The approved well completion plan will be incorporated into the Permit as APPENDIX A and will be binding on the Permittee. Modification of the approved plan is allowed under 40 CFR 144.52(a)(1) provided written approval is obtained from the Director prior to actual modification.

Casing and Cementing (TABLE 3.1)

The well construction plan was evaluated and determined to be in conformance with standard practices and guidelines that ensure well injection does not result in the movement of fluids into USDWs. Well construction details for this "new" injection well is shown in TABLE 3.1.

Remedial cementing may be required if the casing cement is shown to be inadequate by cement bond log or other demonstration of Part II (External) mechanical integrity.

Tubing and Packer

Injection tubing is required to be installed from a packer up to the surface inside the well casing. The packer will be set above the uppermost perforation. The tubing and packer are designed to prevent injection fluid from coming into contact with the outermost casing.

Tubing-Casing Annulus (TCA)

The TCA allows the casing, tubing and packer to be pressure-tested periodically for mechanical integrity, and will allow for detection of leaks. The TCA will be filled with fresh water treated with a corrosion inhibitor or other fluid approved by the Director.

Monitoring Devices

The permittee will be required to install and maintain wellhead equipment that allows for monitoring pressures and providing access for sampling the injected fluid. Required equipment may include but is not limited to: 1) shut-off valves located at the wellhead on the injection tubing and on the TCA; 2) a flow meter that measures the cumulative volume of injected fluid; 3) fittings or pressure gauges attached to the injection tubing and the TCA for monitoring the injection and TCA pressure; and 4) a tap on the injection line, isolated by shut-off valves, for sampling the injected fluid.

All sampling and measurement taken for monitoring must be representative of the monitored activity.

PART IV. Area of Review, Corrective Action Plan (40 CFR 144.55)

TABLE 4.1 lists the wells in the Area of Review ("AOR") and shows the well type, operating status, depth, top of casing cement ("TOC") and whether a Corrective Action Plan ("CAP") is required for the well.

There are no AOR wells for this Permit.

Area Of Review

Applicants for Class I, II (other than "existing" wells) or III injection well Permits are required to identify the location of all known wells within the injection well's Area of Review (AOR) which penetrate the injection zone, or in the case of Class II wells operating over the fracture pressure of the formation, all known wells within the area of review that penetrate formations which may be affected by increased pressure. Under 40 CFR 146.6 the AOR may be a fixed radius of not less than one quarter (1/4) mile or a calculated zone of endangering influence. For Area Permits, a fixed width of not less than one quarter (1/4) mile for the circumscribing area may be used.

Corrective Action Plan

For wells in the AOR which are improperly sealed, completed, or abandoned, the applicant shall develop a Corrective Action Plan (CAP) consisting of the steps or modifications that are necessary to prevent movement of fluid into USDWs.

The CAP will be incorporated into the Permit as APPENDIX F and become binding on the permittee.

PART V. Well Operation Requirements (40 CFR 146.23)

TABLE 5.1
INJECTION ZONE PRESSURES
Walker Hollow Unit 72

Formation Name	Depth Used to Calculate MAIP (ft)	Fracture Gradient (psi/ft)	Initial MAIP (psi)
Green River (Parachute Creek)			
Green River (Evacuation Creek)			
Green River (Garden Gulch)	4,902	0.668	1,140

Approved Injection Fluid

The approved injection fluid is limited to Class II injection well fluids pursuant to 40 CFR § 144.6(b). For disposal wells injecting water brought to the surface in connection with natural gas storage operations, or conventional oil or natural gas production, the fluid may be commingled and the well used to inject other Class II wastes such as drilling fluids and spent well completion, treatment and stimulation fluid. Injection of non-exempt wastes, including unused fracturing fluids or acids, gas plant cooling tower cleaning wastes, service wastes, and vacuum truck and drum rinsate from trucks and drums transporting or containing non-exempt waste, is prohibited.

Injection Pressure Limitation

Injection pressure, measured at the wellhead, shall not exceed a maximum calculated to assure that the pressure used during injection does not initiate new fractures or propagate existing fractures in the confining zones adjacent to the USDWs.

The applicant submitted injection fluid density and injection zone data which was used to calculate a formation fracture pressure and to determine the maximum allowable injection pressure (MAIP), as measured at the surface, for this Permit.

TABLE 5.1 lists the fracture gradient for the injection zone and the approved MAIP, determined according to the following formula:

$$FP = [fg - (0.433 * sg)] * d$$

FP = formation fracture pressure (measured at surface)
fg = fracture gradient (from submitted data or tests)
sg = specific gravity (of injected fluid)
d = depth to top of injection zone (or top perforation)

Injection Volume Limitation

Cumulative injected fluid volume limits are set to assure that injected fluids remain within the boundary of the exempted area. Cumulative injected fluid volume is limited when injection occurs into an aquifer that has been exempted from protection as a USDW.

Mechanical Integrity (40 CFR 146.8)

An injection well has mechanical integrity if:

1. there is no significant leak in the casing, tubing, or packer (Part I); and
2. there is no significant fluid movement into a USDW through vertical channels adjacent to the injection well bore (Part II).

The Permit prohibits injection into a well which lacks mechanical integrity.

The Permit requires that the well demonstrate mechanical integrity prior to injection and periodically thereafter. A demonstration of mechanical integrity includes both internal (Part I) and external (Part II). The methods and frequency for demonstrating Part I and Part II mechanical integrity are dependent upon well-specific conditions as explained below.

Part I (Internal) MI will be demonstrated prior to beginning injection and at least once every five (5) years after the last successful demonstration of Part I MI. A demonstration of Part I MI is also required prior to resuming injection following any workover operation that affects the casing, tubing, or packer. Part I MI may be demonstrated by a standard tubing-casing annulus pressure test using the maximum permitted injection pressure or 1000 psi, whichever is less, with ten (10) percent or less pressure loss over thirty (30) minutes.

Cement records for this well show that adequate cement exists behind pipe between the confining interval. Further demonstration of Part II (External) MI will not be required.

PART VI. Monitoring, Recordkeeping and Reporting Requirements

Injection Well Monitoring Program

At least once a year the permittee must analyze a sample of the injected fluid for total dissolved solids (TDS), specific conductivity, pH, and specific gravity. This analysis shall be reported to EPA annually as part of the Annual Report to the Director. Any time a new source of injected fluid is added, a fluid analysis shall be made of the new source.

Instantaneous injection pressure, injection flow rate, cumulative fluid volume and TCA pressures must be observed on a weekly basis. A recording, at least once every thirty (30) days, must be made of the injection pressure, injection flow rate and cumulative fluid volume, and the maximum and average value for each must be determined for each month. This information is required to be reported annually as part of the Annual Report to the Director.

PART VII. Plugging and Abandonment Requirements (40 CFR 146.10)

Plugging and Abandonment Plan

Prior to abandonment, the well shall be plugged in a manner that isolates the injection zone and prevents movement of fluid into or between USDWs, and in accordance with any applicable Federal, State or local law or regulation. Tubing, packer and other downhole apparatus shall be removed. Cement with additives such as accelerators and retarders that control or enhance cement properties may be used for plugs; however, volume-extending additives and gel cements are not approved for plug use. Plug placement shall be verified by tagging. Plugging gel of at least 9.6 lb/gal shall be placed between all plugs. A minimum 50 ft surface plug shall be set inside and outside of the surface casing to seal pathways for fluid migration into the subsurface. Within

sixty (60) days after plugging the owner or operator shall submit Plugging Record (EPA Form 7520 13) to the Director. The Plugging Record must be certified as accurate and complete by the person responsible for the plugging operation. The plugging and abandonment plan is described in Appendix E of the Permit.

PART VIII. Financial Responsibility (40 CFR 144.52)

Demonstration of Financial Responsibility

The permittee is required to maintain financial responsibility and resources to close, plug, and abandon the underground injection operation in a manner prescribed by the Director. The permittee shall show evidence of such financial responsibility to the Director by the submission of a surety bond, or other adequate assurance such as financial statements or other materials acceptable to the Director. The Regional Administrator may, on a periodic basis, require the holder of a lifetime permit to submit a revised estimate of the resources needed to plug and abandon the well to reflect inflation of such costs, and a revised demonstration of financial responsibility if necessary. Initially, the operator has chosen to demonstrate financial responsibility with:

Surety Bond, received March 27, 2006

Evidence of continuing financial responsibility is required to be submitted to the Director annually.

UNITED STATES ENVIRONMENTAL PROTECTION AGENCY
REGION 8
1595 Wynkoop Street
DENVER, CO 80202-1129
Phone 800-227-8917
http://www.epa.gov/region08

JUN 2 6 2008

Ref: 8P-W-GW

CERTIFIED MAIL
RETURN RECEIPT REQUESTED

Sharon Ward
Citation Oil and Gas Corporation
P.O. Box 690688
Houston, TX 77269-0688

Re: FINAL Permit
UIC Permits: UT21118-07600 &
UT21119-07601
Wells: Walker Hollow Unit 87 &
Walker Hollow Unit 72
Uintah County, UT

Dear Ms. Ward:

Enclosed are your copies of the FINAL Underground Injection Control (UIC) Permits for the proposed Walker Hollow Unit 87 and Walker Hollow Unit 72 injection wells. The Statement of Bases that discuss the conditions and requirements of these EPA UIC Permits are also included.

The Public Comment period for these Permits ended on June 26, 2008. No comments on the Draft Permits were received during the Public Notice period; therefore the Effective Dates for these EPA UIC Permits are the dates of issuance. All conditions set forth herein refer to Title 40 Parts 124, 144, 146, and 147 of the Code of Federal Regulations (CFR) and are regulations that are in effect as of the Effective Date of these Permits.

Please note that under the terms and conditions of these Final Permits you are authorized only to construct the proposed injection wells. Prior to commencing injection, you first must fulfill all "Prior to Commencing Injection" requirements of the Final Permits, Part II Section C Subpart 1, and obtain written Authorization to Inject from the EPA. It is your responsibility to be familiar with and to comply with all provisions of these Final Permits.

These EPA UIC Permits are issued for the operating life of the wells unless terminated (Part III, Section B). The EPA may review these Permits at least every five (5) years to determine whether any action is warranted pursuant to 40 CFR § 144.36(a).

If you have any questions on the enclosed Final Permits or Statement of Bases, please call Wendy Cheung of my staff at (303) 312-6242, or toll-free at (800) 227-8917, ext. 312-6242.

Sincerely,

for Stephen S. Tuber
Assistant Regional Administrator
Office of Partnerships and Regulatory Assistance

enclosures:
Final UIC Permits
Statement of Bases
Form 7520-7 Application to Transfer Permit
Form 7520-11 Monitoring Report
Form 7520-14 Plugging Plan
Form 7520-12 Well Rework Record
Groundwater Section Guidance 34
Groundwater Section Guidance 35
Groundwater Section Guidance 37
Groundwater Section Guidance 39

STATE OF UTAH
DEPARTMENT OF NATURAL RESOURCES
DIVISION OF OIL, GAS AND MINING

FORM 9

SUNDRY NOTICES AND REPORTS ON WELLS

Do not use this form for proposals to drill new wells, significantly deepen existing wells below current bottom-hole depth, reenter plugged wells, or to drill horizontal laterals. Use APPLICATION FOR PERMIT TO DRILL form for such proposals.

5. LEASE DESIGNATION AND SERIAL NUMBER: ML 3175

6. IF INDIAN, ALLOTTEE OR TRIBE NAME:

7. UNIT or CA AGREEMENT NAME: Walker Hollow Unit

8. WELL NAME and NUMBER: Walker Hollow Unit 72

9. API NUMBER: 4304731227

10. FIELD AND POOL, OR WILDCAT: Walker Hollow Green River

1. TYPE OF WELL: OIL WELL ☐ GAS WELL ☐ OTHER Conversion to injection

2. NAME OF OPERATOR: Citation Oil & Gas Corp.

3. ADDRESS OF OPERATOR: P O Box 690688 CITY Houston STATE TX ZIP 77260 PHONE NUMBER: (281) 517-7800

4. LOCATION OF WELL

FOOTAGES AT SURFACE: 3227' FSL & 503' FWL COUNTY: Uintah

QTR/QTR, SECTION, TOWNSHIP, RANGE, MERIDIAN: SWNW 2 7S 23E STATE: UTAH

11. CHECK APPROPRIATE BOXES TO INDICATE NATURE OF NOTICE, REPORT, OR OTHER DATA

TYPE OF SUBMISSION	TYPE OF ACTION		
☑ NOTICE OF INTENT (Submit in Duplicate)	☐ ACIDIZE	☐ DEEPEN	☐ REPERFORATE CURRENT FORMATION
Approximate date work will start:	☐ ALTER CASING	☐ FRACTURE TREAT	☐ SIDETRACK TO REPAIR WELL
	☐ CASING REPAIR	☐ NEW CONSTRUCTION	☐ TEMPORARILY ABANDON
	☐ CHANGE TO PREVIOUS PLANS	☐ OPERATOR CHANGE	☐ TUBING REPAIR
	☐ CHANGE TUBING	☐ PLUG AND ABANDON	☐ VENT OR FLARE
☐ SUBSEQUENT REPORT (Submit Original Form Only)	☐ CHANGE WELL NAME	☐ PLUG BACK	☑ WATER DISPOSAL
Date of work completion:	☐ CHANGE WELL STATUS	☐ PRODUCTION (START/RESUME)	☐ WATER SHUT-OFF
	☐ COMMINGLE PRODUCING FORMATIONS	☐ RECLAMATION OF WELL SITE	☐ OTHER:
	☑ CONVERT WELL TYPE	☐ RECOMPLETE - DIFFERENT FORMATION	

12. DESCRIBE PROPOSED OR COMPLETED OPERATIONS. Clearly show all pertinent details including dates, depths, volumes, etc.

Citation Oil & Gas Corp. plans to convert the Walker Hollow Unit 72 to injection upon EPA approval with attached procedure. Application was submitted to state and EPA in January of 2006. EPA approval is anticipated this year.

NAME (PLEASE PRINT) Sharon Ward TITLE Permitting Manager

SIGNATURE Sharon Ward DATE 2/19/2008

(This space for State use only)

(5/2000) (See Instructions on Reverse Side)

Walker Hollow Unit #.

Work-over Procedure:

Objective: Convert well to injection service.

Comments: 1. Hot oil as necessary to continue work.
2. Last failure pump change 6/05.

1. MIRUSU. Unseat pump and POOH with pump and rods.

2. ND Tree. NU 3M BOP's. Release TAC and POOH with 2 7/8" tubing.

3. PU work-string and round trip bit and scraper to 5727'. PBTD

4. PU and RIH with 2 7/8" IPC tubing and BHA to 5100'.

5. Circulate hole with 9 ppg clean fluid.

6. Set R-3 packer at 5100' and snap set packer at 4850'.

7. ND BOP's and NU Tree.

8. Perform MIT to 1200 psi.

9. Hook up flow line and wait on EPA approval to begin water injection.

10. After injection has stabilized, approximately two months, contact engineer to set up Injection Profile.

List of Citation Contacts

Foreman	Robert Eye	Cell:	435.790.4406	Home: 435.781.4147
Engineer	Chad Stallard	Cell:	713.249.4671	Office: 281-517-7527

CITATION OIL & GAS CORP.
WALKER HOLLOW UNIT #72
3270' FSL, 500' FWL, Section 2-7S-3E
UINTAH CO., UTAH
Proposed Injection

KB: 15 FT
GL: 5339

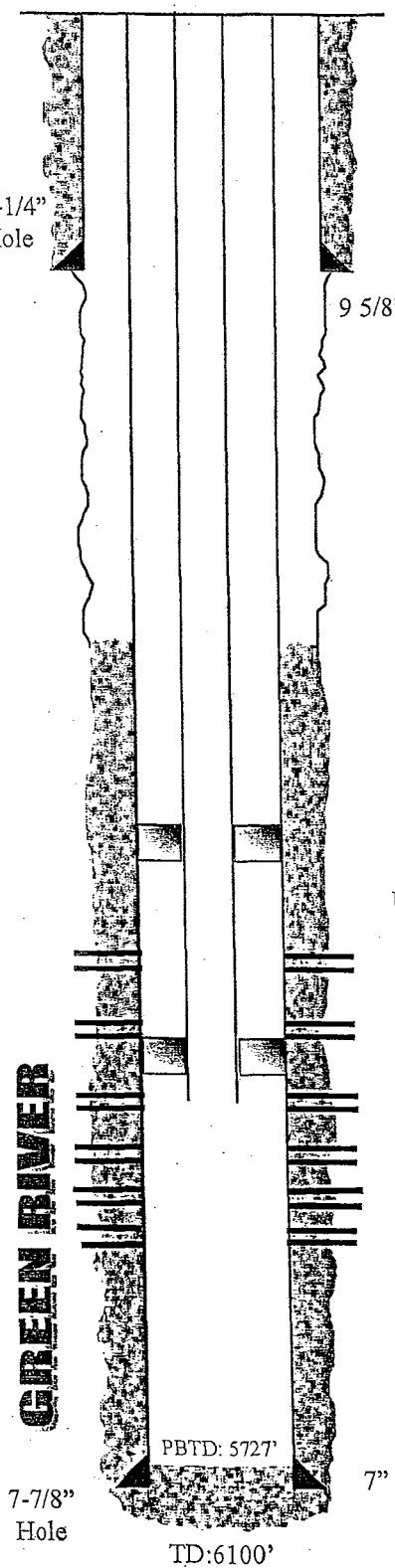

9 5/8" 36# K-55 @ 420'

Snap Set packer at 4850'

Upper Green River

5a 4902' – 4922' 4JSPF (Compl & Acid 11/82)
5a2 4964' – 4970' 4JSPF (Compl & Acid 11/82)
5b 4980' – 5000' 4JSPF (Compl & Acid 11/82)
R-3 packer at 5100'
8a 5406' – 5418' 2 JSPF (Compl & Acid & SQZ 11/82)
8b 5474' – 5484' & 5488' – 5498' 2 JSPF (Compl & Acid & SQZ 11/82)
8c 5508' – 5516' 5518' – 5528' & 5530' – 5538' 2 JSPF (Compl & Acid: 11/82, Frac'd 11/82)
DL1a 5600' – 5624' 2 JSPF (Compl & Acid: 11/82, Frac'd 11/82)

7" 20 & 23# @ 5781'

Updated: 11/29/05 - CSS

STATE OF UTAH
DEPARTMENT OF NATURAL RESOURCES
DIVISION OF OIL, GAS AND MINING

FORM 9

SUNDRY NOTICES AND REPORTS ON WELLS

Do not use this form for proposals to drill new wells, significantly deepen existing wells below current bottom-hole depth, reenter plugged wells, or to drill horizontal laterals. Use APPLICATION FOR PERMIT TO DRILL form for such proposals.

5. LEASE DESIGNATION AND SERIAL NUMBER: Fee
6. IF INDIAN, ALLOTTEE OR TRIBE NAME:
7. UNIT or CA AGREEMENT NAME:
8. WELL NAME and NUMBER: Bingham 10-1
9. API NUMBER: 4304330025
10. FIELD AND POOL, OR WILDCAT: Pineview Twin Creek

1. TYPE OF WELL: OIL WELL ☑ GAS WELL ☐ OTHER
2. NAME OF OPERATOR: Citation Oil & Gas Corp.
3. ADDRESS OF OPERATOR: P.O. Box 690688 CITY Houston STATE TX ZIP 77269-0688 PHONE NUMBER: (281) 517-7194
4. LOCATION OF WELL
FOOTAGES AT SURFACE: 682' FNL & 3279' FWL COUNTY: Summit
QTR/QTR, SECTION, TOWNSHIP, RANGE, MERIDIAN: NWNE 10 2N 7E STATE: UTAH

11. CHECK APPROPRIATE BOXES TO INDICATE NATURE OF NOTICE, REPORT, OR OTHER DATA

TYPE OF SUBMISSION	TYPE OF ACTION		
☐ NOTICE OF INTENT (Submit in Duplicate)	☐ ACIDIZE	☐ DEEPEN	☐ REPERFORATE CURRENT FORMATION
Approximate date work will start:	☐ ALTER CASING	☐ FRACTURE TREAT	☐ SIDETRACK TO REPAIR WELL
	☐ CASING REPAIR	☐ NEW CONSTRUCTION	☑ TEMPORARILY ABANDON
	☐ CHANGE TO PREVIOUS PLANS	☐ OPERATOR CHANGE	☐ TUBING REPAIR
	☐ CHANGE TUBING	☐ PLUG AND ABANDON	☐ VENT OR FLARE
☑ SUBSEQUENT REPORT (Submit Original Form Only)	☐ CHANGE WELL NAME	☐ PLUG BACK	☐ WATER DISPOSAL
Date of work completion:	☐ CHANGE WELL STATUS	☐ PRODUCTION (START/RESUME)	☐ WATER SHUT-OFF
	☐ COMMINGLE PRODUCING FORMATIONS	☐ RECLAMATION OF WELL SITE	☑ OTHER: Renewal of TA Status
	☐ CONVERT WELL TYPE	☐ RECOMPLETE - DIFFERENT FORMATION	

12. DESCRIBE PROPOSED OR COMPLETED OPERATIONS. Clearly show all pertinent details including dates, depths, v olumes, etc.

Citation Oil & Gas Corp. requests approval to retain this wellbore in a Temporarily Abandoned status for potential recompletion to the Sliderock formation as a producer. If recompletion is unsuccessful, the well will be converted to a Nugget injection well. Citation is currently evaluating potential in the Sliderock for this field. Once a procedure has been established and authorized, we will submit a Notice of Intent for your approval.

NAME (PLEASE PRINT) Debra Harris TITLE Regulatory Compliance Coordinator
SIGNATURE Debra Harris DATE 8/10/2007

(This space for State use only)
APPROVED BY THE STATE OF UTAH DIVISION OF OIL, GAS, AND MINING
DATE: 11/14/07
BY:
* Approval to 12/1/2008

(See Instructions on Reverse Side)

RECEIVED
AUG 16 2007
DIV. OF OIL, GAS & MINING

(5/2000)

FORM 9

STATE OF UTAH
DEPARTMENT OF NATURAL RESOURCES
DIVISION OF OIL, GAS AND MINING

5. LEASE DESIGNATION AND SERIAL NUMBER: ML 3175

SUNDRY NOTICES AND REPORTS ON WELLS

6. IF INDIAN, ALLOTTEE OR TRIBE NAME:

Do not use this form for proposals to drill new wells, significantly deepen existing wells below current bottom-hole depth, reenter plugged wells, or to drill horizontal laterals. Use APPLICATION FOR PERMIT TO DRILL form for such proposals.

7. UNIT or CA AGREEMENT NAME: Walker Hollow Unit UTU66837A

1. TYPE OF WELL: OIL WELL ☑ GAS WELL ☐ OTHER

8. WELL NAME and NUMBER: Walker Hollow Unit #72

2. NAME OF OPERATOR: Citation Oil & Gas Corp.

9. API NUMBER: 4304731227

3. ADDRESS OF OPERATOR: P.O. Box 690688 CITY Houston STATE TX ZIP 77269-0688 PHONE NUMBER: (281) 517-7800

10. FIELD AND POOL, OR WILDCAT: Walker Hollow Green River

4. LOCATION OF WELL

FOOTAGES AT SURFACE: 3227' FSL & 503' FWL COUNTY: Uintah

QTR/QTR, SECTION, TOWNSHIP, RANGE, MERIDIAN: SWNW 2 7S 23E STATE: UTAH

11. CHECK APPROPRIATE BOXES TO INDICATE NATURE OF NOTICE, REPORT, OR OTHER DATA

TYPE OF SUBMISSION	TYPE OF ACTION		
☑ NOTICE OF INTENT (Submit in Duplicate)	☐ ACIDIZE	☐ DEEPEN	☐ REPERFORATE CURRENT FORMATION
Approximate date work will start:	☐ ALTER CASING	☐ FRACTURE TREAT	☐ SIDETRACK TO REPAIR WELL
	☐ CASING REPAIR	☐ NEW CONSTRUCTION	☐ TEMPORARILY ABANDON
	☐ CHANGE TO PREVIOUS PLANS	☐ OPERATOR CHANGE	☐ TUBING REPAIR
	☐ CHANGE TUBING	☐ PLUG AND ABANDON	☐ VENT OR FLARE
☐ SUBSEQUENT REPORT (Submit Original Form Only)	☐ CHANGE WELL NAME	☐ PLUG BACK	☐ WATER DISPOSAL
Date of work completion:	☐ CHANGE WELL STATUS	☐ PRODUCTION (START/RESUME)	☐ WATER SHUT-OFF
	☐ COMMINGLE PRODUCING FORMATIONS	☐ RECLAMATION OF WELL SITE	☑ OTHER: SHUT IN - PENDING CONVERSION
	☐ CONVERT WELL TYPE	☐ RECOMPLETE - DIFFERENT FORMATION	

12. DESCRIBE PROPOSED OR COMPLETED OPERATIONS. Clearly show all pertinent details including dates, depths, v olumes, etc.

This well last produced 10/31/2006. In January, 2006, Citation applied to EPA to convert well to water injection. EPA Permit UT21119-07601 was approved 6/26/2008. Upon EPA approval, well will be converted to injection, tested for mechanical integrity and upon EPA approval, injection will commence. Until commencement of injection is approved by EPA, Citation requests approval to retain this well in it's current inactive status.

NAME (PLEASE PRINT) Debra Harris TITLE Regulatory Compliance Coordinator

SIGNATURE Debra Harris DATE 8/22/2008

(This space for State use only)

RECEIVED
AUG 25 2008
DIV. OF OIL, GAS & MINING

(5/2000) (See Instructions on Reverse Side)

STATE OF UTAH
DEPARTMENT OF NATURAL RESOURCES
DIVISION OF OIL, GAS AND MINING

FORM 9

SUNDRY NOTICES AND REPORTS ON WELLS

Do not use this form for proposals to drill new wells, significantly deepen existing wells below current bottom-hole depth, reenter plugged wells, or to drill horizontal laterals. Use APPLICATION FOR PERMIT TO DRILL form for such proposals.

5. LEASE DESIGNATION AND SERIAL NUMBER: ML 3175
6. IF INDIAN, ALLOTTEE OR TRIBE NAME:
7. UNIT or CA AGREEMENT NAME: Walker Hollow Unit UTU66837A
8. WELL NAME and NUMBER: Walker Hollow Unit #72
9. API NUMBER: 4304731227
10. FIELD AND POOL, OR WILDCAT: Walker Hollow Green River

1. TYPE OF WELL: OIL WELL ☑ GAS WELL ☐ OTHER _____
2. NAME OF OPERATOR: Citation Oil & Gas Corp.
3. ADDRESS OF OPERATOR: P.O. Box 690688 CITY Houston STATE TX ZIP 77269-0688 PHONE NUMBER: (281) 517-7800
4. LOCATION OF WELL
FOOTAGES AT SURFACE: 3227' FSL & 503' FWL COUNTY: Uintah
QTR/QTR, SECTION, TOWNSHIP, RANGE, MERIDIAN: SWNW 2 7S 23E STATE: UTAH

11. CHECK APPROPRIATE BOXES TO INDICATE NATURE OF NOTICE, REPORT, OR OTHER DATA

TYPE OF SUBMISSION	TYPE OF ACTION		
☑ NOTICE OF INTENT (Submit in Duplicate)	☐ ACIDIZE	☐ DEEPEN	☐ REPERFORATE CURRENT FORMATION
Approximate date work will start: _____	☐ ALTER CASING	☐ FRACTURE TREAT	☐ SIDETRACK TO REPAIR WELL
	☐ CASING REPAIR	☐ NEW CONSTRUCTION	☐ TEMPORARILY ABANDON
	☐ CHANGE TO PREVIOUS PLANS	☐ OPERATOR CHANGE	☐ TUBING REPAIR
	☐ CHANGE TUBING	☐ PLUG AND ABANDON	☐ VENT OR FLARE
☐ SUBSEQUENT REPORT (Submit Original Form Only)	☐ CHANGE WELL NAME	☐ PLUG BACK	☐ WATER DISPOSAL
Date of work completion: _____	☐ CHANGE WELL STATUS	☐ PRODUCTION (START/RESUME)	☐ WATER SHUT-OFF
	☐ COMMINGLE PRODUCING FORMATIONS	☐ RECLAMATION OF WELL SITE	☑ OTHER: SHUT IN - PENDING CONVERSION
	☐ CONVERT WELL TYPE	☐ RECOMPLETE - DIFFERENT FORMATION	

12. DESCRIBE PROPOSED OR COMPLETED OPERATIONS. Clearly show all pertinent details including dates, depths, volumes, etc.

This well last produced 10/31/2006. In January, 2006, Citation applied to EPA to convert well to water injection. EPA Permit UT21119-07601 was approved 6/26/2008. Upon EPA approval, well will be converted to injection, tested for mechanical integrity and upon EPA approval, injection will commence. Until commencement of injection is approved by EPA, Citation requests approval to retain this well in it's current inactive status.

NAME (PLEASE PRINT) Debra Harris TITLE Regulatory Compliance Coordinator
SIGNATURE Debra Harris DATE 8/22/2008

(This space for State use only)

Citation OIL & GAS CORP.

Certified Mail: 7007 3020 0000 2533 7090

August 21, 2008

State of Utah
Division of Oil, Gas and Mining
1594 West North Temple, Suite 1210
Sale Lake City, Utah 84114-5801

ATTN: Mr. Dustin Doucet, Petroleum Engineer

Re: Extended Shut-In and Temporarily Abandoned Well Requirements

Mr. Doucette,

Per your letter dated July 28, 2008 (copy attached) concerning non-compliance with requirements for extended shut-in and/or temporarily abandoned status of two wells which Citation operates, please see the attached correspondence.

- Bingham 10-1 renewal of TA status was approved by your office on 11/14/2007 until 12/1/2008 (see attached). Prior to that date, Citation will submit a Notice of Intent with procedures for recompletion to oil or recompletion and conversion to an injection well, based upon ongoing evaluation of work to be done in this field.

- Walker Hollow Unit 72 Notice of Intent to convert to injection was submitted to your office 2/19/2008. The permit application was submitted to the EPA in early 2006; however, the final permit was only signed by the EPA 6/26/2008 (see attached). Once the conversion procedure has been approved by EPA, work to convert this well will commence, the well will be tested for mechanical integrity prior to commencement of injection. Your office will be notified of conversion and MIT at that time.

If you need additional information please contact me at (281) 517-7194 or via email at dharris@cogc.com.

Sincerely,

Debra Harris

Debra Harris
Regulatory Compliance Coordinator

/dkh

Attachments

cc: CTR, SEW

RECEIVED
AUG 25 2008
DIV. OF OIL, GAS & MINING

JON M. HUNTSMAN, JR.
Governor

GARY R. HERBERT
Lieutenant Governor

State of Utah
DEPARTMENT OF NATURAL RESOURCES

MICHAEL R. STYLER
Executive Director

Division of Oil, Gas and Mining

JOHN R. BAZA
Division Director

AUG 0 4 2008
PRODUCTION DEPT.

July 28, 2008

CERTIFIED MAIL NO.: 7004 2510 0004 1824 5759

Debra Harris
Citation Oil & Gas Corp
P.O. Box 690688
Houston, TX 77269-0688

Re: Extended Shut-in and Temporarily Abandoned Well Requirements for Fee or State Leases

Dear Ms. Harris:

As of July 2008, Citation Oil & Gas Corporation has one (1) Fee Lease Well and one (1) Mineral Lease Well (see Attachment A) currently in non-compliance with the requirements for extended shut-in or temporarily abandoned (SI/TA) status. Based on previous correspondence, the Bingham 10-1 well was to be recompleted and put back on production. To date nothing appears to have been done on this well.

Wells SI/TA beyond twelve (12) consecutive months requires filing a Sundry Notice (R649-3-36-1). Wells with five (5) years non-activity or non-productivity shall be plugged, unless the Division grants approval for extended shut-in time upon a showing of good cause by the operator (649-3-36-1.3.3). For extended SI/TA consideration the operator shall provide the Utah Division of Oil, Gas & Mining with the following:

1. Reasons for SI/TA of the well (R649-3-36-1.1).
2. The length of time the well is expected to be SI/TA (R649-3-36-1.2), and
3. An explanation and supporting data if necessary, for showing the well has integrity, meaning that the casing, cement, equipment condition, static fluid level, pressure, existence or absence of Underground Sources of Drinking Water and other factors do not make the well a risk to public health and safety or the environment (R649-3-36-1.3).

CTR
SEN
BL

1594 West North Temple, Suite 1210, PO Box 145801, Salt Lake City, UT 84114-5801
telephone (801) 538-5340 • facsimile (801) 359-3940 • TTY (801) 538-7458 • *www.ogm.utah.gov*

RECEIVED
AUG 2 5 2008
DIV. OF OIL, GAS & MINING

UTAH DNR
OIL, GAS & MINING

Submitting the information suggested below may help show well integrity and may help qualify your well for extended SI/TA. **Note: As of July 1, 2003, wells in violation of the SI/TA rule R649-3-36 may be subject to full cost bonding (R649-3-1-4.2, 4.3).**

1. Wellbore diagram, and
2. Copy of recent casing pressure test, and
3. Current pressures on the wellbore (tubing pressure, casing pressure, and casing/casing annuli pressure) showing wellbore has integrity, and
4. Fluid level in the wellbore, and
5. An explanation of how the submitted information proves integrity.

If the required information is not received within 30 days of the date of this notice, further actions will be initiated. If you have any questions concerning this matter, please contact me at (801) 538-5281.

Sincerely,

Dustin K. Doucet
Petroleum Engineer

JP/js
Enclosure

cc: Jim Davis, SITLA
Well Files
Compliance File

ATTACHMENT A

	Well Name	API	Lease Type	Years Inactive
1	Bingham 10-1	43-043-30025	Fee	10 Years 2 Months
2	Walker Hollow 72	43-047-31227	ML-3175	1 Years 8 Months

JON M. HUNTSMAN, JR.
Governor

GARY R. HERBERT
Lieutenant Governor

State of Utah
DEPARTMENT OF NATURAL RESOURCES

MICHAEL R. STYLER
Executive Director

Division of Oil Gas and Mining

JOHN R. BAZA
Division Director

January 20, 2009

Debra Harris
Citation Oil & Gas Corp
P.O. Box 690688
Houston, TX 77269-0688

7S 23E 2

Subject: Bingham 10-1 API 43-043-30025 Walker Hollow Unit 72 API 43-047-31227 Extended Shut-in and Temporary Abandoned Well Requirements for Fee or State Leases dated July 28, 2008

Dear Ms. Harris:

The Division of Oil, Gas and Mining (the Division) is in receipt of your letter dated August 21, 2008 (received by the Division on 8/25/2008) in regards to the two (2) shut-in or temporarily abandoned (SI/TA) wells operated by Citation Oil and Gas Corp (Citation). It is the Divisions understanding that Citation will be submitting a Notice of Intent with procedures for recompletion to oil or recompletion and conversion to an injection well for the Bingham 10-1 (API 43-043-30025).

The Division wishes to remind Citation that extension of TA status for Bingham 10-1 expired on 12/1/2008. It is also the Divisions understanding that Citation is waiting on conversion approval by EPA for Walker Hollow Unit 72 (API 43-047-31227). Please submit required documentation per rule R649-3-36 to keep the above listed wells in compliance.

If the required information is not received within 30 days of the date of this notice, further actions may be initiated. If you have any questions concerning this matter, please contact me at (801) 538-5281.

Sincerely,

Dustin K. Doucet
Petroleum Engineer

DKD/JP/js
cc: Jim Davis, SITLA
Well Files
Compliance File

N:\O&G Reviewed Docs\ChronFile\PetroleumEngineer\SITA

1594 West North Temple, Suite 1210, PO Box 145801, Salt Lake City, UT 84114-5801
telephone (801) 538-5340 • facsimile (801) 359-3940 • TTY (801) 538-7458 • *www.ogm.utah.gov*

UTAH DNR OIL, GAS & MINING

090325

80.04993.1 - Oil
SU

STATE OF UTAH
DEPARTMENT OF NATURAL RESOURCES
DIVISION OF OIL, GAS AND MINING

Need new 80# FORM 9 ✓ N

SUNDRY NOTICES AND REPORTS ON WELLS

Do not use this form for proposals to drill new wells, significantly deepen existing wells below current bottom-hole depth, reenter plugged wells, or to drill horizontal laterals. Use APPLICATION FOR PERMIT TO DRILL form for such proposals.

5. LEASE DESIGNATION AND SERIAL NUMBER: ML 3175

6. IF INDIAN, ALLOTTEE OR TRIBE NAME:

7. UNIT or CA AGREEMENT NAME: Walker Hollow Unit

8. WELL NAME and NUMBER: Walker Hollow Unit 72

9. API NUMBER: 4304731227

10. FIELD AND POOL, OR WILDCAT: Walker Hollow Green River

1. TYPE OF WELL: OIL WELL ☑ GAS WELL ☐ OTHER

2. NAME OF OPERATOR: Citation Oil & Gas Corp.

3. ADDRESS OF OPERATOR: P O Box 690688 CITY Houston STATE TX ZIP 77269 PHONE NUMBER: (281) 517-7800

4. LOCATION OF WELL

FOOTAGES AT SURFACE: 3227' FSL COUNTY: Uintah

QTR/QTR, SECTION, TOWNSHIP, RANGE, MERIDIAN: SWNW 12 7S 23E STATE: UTAH

11. CHECK APPROPRIATE BOXES TO INDICATE NATURE OF NOTICE, REPORT, OR OTHER DATA

TYPE OF SUBMISSION	TYPE OF ACTION		
☑ NOTICE OF INTENT (Submit in Duplicate)	☐ ACIDIZE	☐ DEEPEN	☑ REPERFORATE CURRENT FORMATION
Approximate date work will start:	☐ ALTER CASING	☐ FRACTURE TREAT	☐ SIDETRACK TO REPAIR WELL
	☐ CASING REPAIR	☐ NEW CONSTRUCTION	☐ TEMPORARILY ABANDON
	☐ CHANGE TO PREVIOUS PLANS	☐ OPERATOR CHANGE	☐ TUBING REPAIR
	☐ CHANGE TUBING	☐ PLUG AND ABANDON	☐ VENT OR FLARE
☐ SUBSEQUENT REPORT (Submit Original Form Only)	☐ CHANGE WELL NAME	☐ PLUG BACK	☐ WATER DISPOSAL
Date of work completion:	☐ CHANGE WELL STATUS	☐ PRODUCTION (START/RESUME)	☐ WATER SHUT-OFF
	☐ COMMINGLE PRODUCING FORMATIONS	☐ RECLAMATION OF WELL SITE	☐ OTHER:
	☐ CONVERT WELL TYPE	☐ RECOMPLETE - DIFFERENT FORMATION	

12. DESCRIBE PROPOSED OR COMPLETED OPERATIONS. Clearly show all pertinent details including dates, depths, volumes, etc.

Citation Oil & Gas Corp. requests permission to add additional perfs in the permitted injection interval per EPA Permit that was approved 6/26/2008. Please see the attached wellbore schematics and procedure.

RECEIVED
JUL 31 2009
PRODUCTION DEPT.

CTR
Fmn: Uintah Basin

NAME (PLEASE PRINT) Bridget Lisenbe TITLE Permitting Analyst

SIGNATURE Bridget Lisenbe DATE 7/7/2009

(This space for State use only)

APPROVED BY THE STATE OF UTAH DIVISION OF OIL, GAS, AND MINING
DATE: 7/20/09
BY: [signature]

Federal Approval Of This Action Is Necessary :

(See Instructions on Reverse Side)

RECEIVED
JUL 13 2009
DIV. OF OIL, GAS & MINING

(5/2000)

WORKOVER PROCEDURE

PROJECT: Walker Hollow Unit 72: OAP and Convert to Water Injection Well

DRILLED & COMPLETED: 8/82 thru 11/82 LAST WO: 6/20/05 – Flush tubing, COP, COPR & RTP

LOCATION: 3227' FSL & 503' FWL, (SW NW) Sec. 2, T7S, R23E

FIELD: Walker Hollow Green River COUNTY: Uintah STATE: UT

TD: 5790' KB PBTD: 5727' KB DATUM: 5339' GL KB to GL: 15'

CASING AND LINER RECORD

SIZE	WEIGHT	DEPTH	CEMENT	HOLE SIZE	TOC	REMARKS
9 5/8"	36#	420'	220 sx	12 1/4"	SURFACE	CIRC'D
7"	20 & 23#	5781'	1275 sx	8 3/4"	1560'	CBL (9/9/82)

PRESENT FORMATION AND COMPLETION: Green River: 4902' – 5624' OA

TUBING: 182 jts 2 7/8" 6.5# J-55 8rd EUE tbg, SN @ ~5654' KB, 2 7/8" x 7" TAC @ ~5655' KB, 1 jt 2 7/8" 6.5# J-55 8rd EUE tbg w/ NB collar, EOT @ 5689' KB

ROD DETAIL: 1 1/2" x 30' PR w/ Liner, 2', 4', 6', 6' x 1" 'D' pony rods, 63 – 1" 'D' SR, 75 – 7/8" 'D' SR, 75 – 3/4" 'D' SR, 11 – 1" 'D' SR, 2 1/2" x 1 3/4" x 20' x 22 1/2' RHAC

MISC.: Wellfiles do not indicate any major activity since COG acquisition

PROCEDURE

- MI & rack ~5800' 2 7/8" 6.5 ppf N-80 8rd EUE workstring tubing.
- MI & rack ~5100' 2 7/8" 6.5 ppf J-55 8rd EUE IPC injection tubing.
- "Double Truck" HW annulus prior to pulling operations.

1. MI RU PU. POOH w/ rod string to part. If necessary, fish rods & pump. POOH & LD rods & pump. HW/NGL tubing & annulus to clean-up.
2. ND WH. NU BOP. Release TAC set @ 5655' KBM. POOH & Tally LD 2 7/8" production tubing. **Note: Have production tubing cleaned and inspected & stored in yard.**
3. PU & Talley RIH w/ 6 1/8" MT bit, 7" scraper & SN on 2 7/8" WS to PBTD @ ± 5730' KB. **Note: If necessary, clean-out fill.**
4. POOH w/ 2 7/8" WS & LD Bit & Scraper.
5. MI RU WL Unit & pack-off. PU & RIH w/ perf gun. As per Reservoir Department, correlate to Open-hole Schlumberger logs (9/5/82) and Gearhart CBL (9/9/82) & perforate 8D interval w/ 4 spf @ 90° phasing as follows:

Formation	Interval	# feet	# Perfs
8D	5574' - 5590'	16	65

4. POOH & LD perf gun. RD WL Sheave. **Note: If necessary, keep WL on location and use to correlate DH tools.**
5. PU & RIH w/ 7" PKR / RBP w/ ball catcher & SN on 2 7/8" WS. Set RBP w/ BC @ 5595' KB – *correlate w/ WL.* PT RBP to 2000#. PUH & set PKR @ ± 5550'. – *if necessary, correlate w/ WL.* MO WL Unit.
6. MI RU stimulation company equipment. Acidize 8d perfs w/ 1500 gals 15% NEFe HCL w/ additives & 100 BS – spaced throughout. Flush w/ produced water to bottom perf. Record rates & pressures along with ISIP, 5, 10 & 15 minute SIP's. Formation should break-down @ ≤ 1600 psi. Pmx = 2000 psi. SI 30 minutes.
7. RU Swab. Swab back load. Swab test 8d perforations as per Reservoir request. RD Swab.
8. Release PKR. Retrieve RBP. POOH & LD 2 7/8" WS, SN & PKR/RBP.
9. PU & RIH w/ 2 7/8" injection assembly as follows (top → bottom) – KB correction of 13':

    - ± 156 jts 2 7/8" 6.5 ppf J-55 8rd EUE IPC tubing (± 4836')
    - 2 7/8" x 7" Baker model "AR-1" Snap-Set compression PKR (± 6.1') set @ ± 4850' KBM
    - ± 8 jts 2 7/8" 6.5 ppf J-55 8rd EUE IPC tubing (± 248')
    - 2 7/8" x 7" Baker model "R" PKR (± 7.58') set @ ± 5103' KBM - EOT @ ± 5111' KBM

10. Set Baker model "R" PKR @ ± 5103'. Set "AR-1" Snap-Set PKR at ± 4850'.
11. RU pump truck. Load annulus & PT to 1500 psi. Release PKR's & circulate hole w/ PKR FL (**NOTE: Annular capacity to bottom PKR is ~166 Bbls**). Reset PKR's. Load annulus w/ PKR FL. PT annulus to 1500 psi.
12. ND BOP. NU WH. Perform MIT as per BLM & Utah regulations.
13. Perform SRIT (Step Rate Injectivity Test) as requested by BLM permit to evaluate injection capacity and frac gradient of well. RD pump truck. RD MO PU.
14. Install injection line. Wait on injection permit approval.
15. After approval is received initiate injection at desired rates.
16. Monitor until rates stabilize. Run injection profile.

CITATION OIL & GAS CORP.
WALKER HOLLOW UNIT #72
3227' FSL, 503' FWL, (SW NW) Section 2 - T7S - R3E
UINTAH CO., UTAH
Current Status: Active Producer

Lufkin M456D-305-144
Ajax DP60

API No: 43-047-31227

Elevation: 5339' GL
KB = 15' AGL

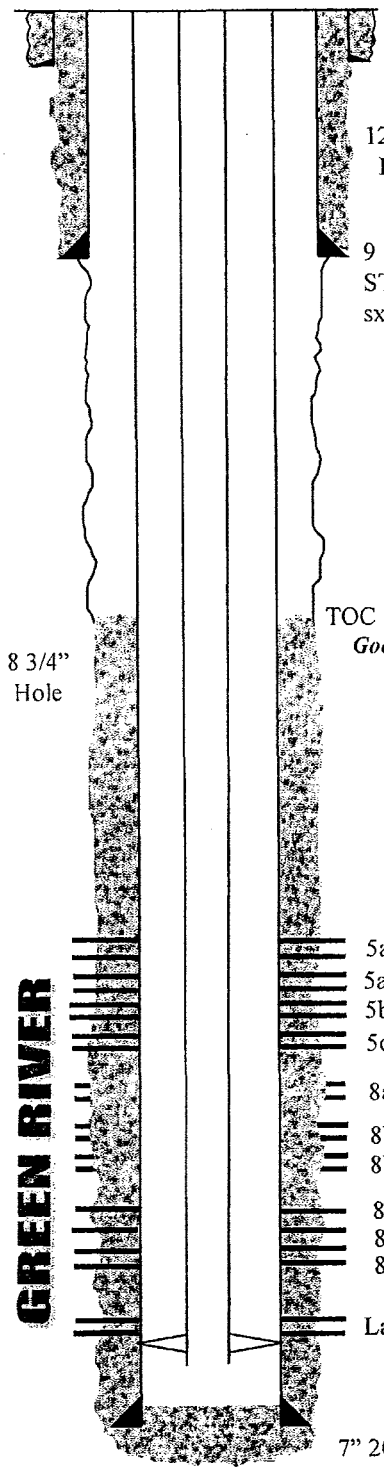

20" conductor @ 40'

12-1/4" Hole

9 5/8" 36# K-55 ST&C @ 420' w/ 220 sx – Circ'd to surface

TOC @ 1560' (CBL 9/9/82)
Good Bond starts ~3140'

8 3/4" Hole

5a: 4902' – 4922' w/ 4 spf (Acidize 10/82)
5a2: 4964' – 4970' w/ 4 spf (Acidize 10/82)
5b: 4980' – 5000' w/ 4 spf (Acidize 10/82)
5c: 5008' – 5016' w/ 4 spf (Acidize 10/82)

8a: 5406' – 5418' w/ 2 spf (Acidize & Cmt Sqz'd 10/82)

8b: 5474' – 5484' w/ 2 spf (Acidized & Cmt Sqz'd 10/82)
8b: 5488' – 5498' w/ 2 spf (Acidized & Cmt Sqz'd 10/82)

8c: 5508' – 5516' w/ 2 spf (Acidize & Frac 10/82)
8c: 5518' – 5528' w/ 2 spf (Acidize & Frac 10/82)
8c: 5530' – 5538' w/ 2 spf (Acidize & Frac 10/82)

La: 5600' – 5624' w/ 2 spf (Acidize & Frac 10/82)

7" 20# & 23# K-55 ST&C @ 5781' w/ 1275 sx

PBTD = 5730'
TD = 5790'

Completion Assembly (4/23/03)

Qty	Description	Length	Depth
	KB correction	13.00'	13.00'
182 jts	2 7/8" 6.5# J-55 8rd EUE tbg	5640.62'	5653.62'
1	2 7/8" SN	1.10'	5654.72'
1	2 7/8" x 7" TAC @ 5655' KB	2.37'	5657.09'
1jt	2 7/8" 6.5# J-55 8rd EUE tbg	31.75'	5688.84'
1	2 7/8" Notched Collar	0.45'	5689.29'

Rod/Pump DETAIL (6/20/05)

Qty	Size	Length	Depth
	PR &Liner		
4	2', 4', 6', 6' x 1"	18.00'	18.00'
63	1" Grade D SR	1575.00'	1593.00'
75	7/8" Grade D SR	1875.00'	3468.00'
75	3/4" Grade D SR	1875.00'	5343.00'
11	1" Grade D SR	275.00'	5618.00'
Pump: 2 1/2" x 13/4" x 20' x 22 1/2' RHAC, EX-71			

Updated: 10/20/08 - JTT

CITATION OIL & GAS CORP.
WALKER HOLLOW UNIT #72
3227' FSL, 503' FWL, (SW NW) Section 2 - T7S - R3E
UINTAH CO., UTAH
PROPOSED STATUS: ACTIVE WIW

API No: 43-047-31227

Elevation: 5339' GL
KB = 15' AGL

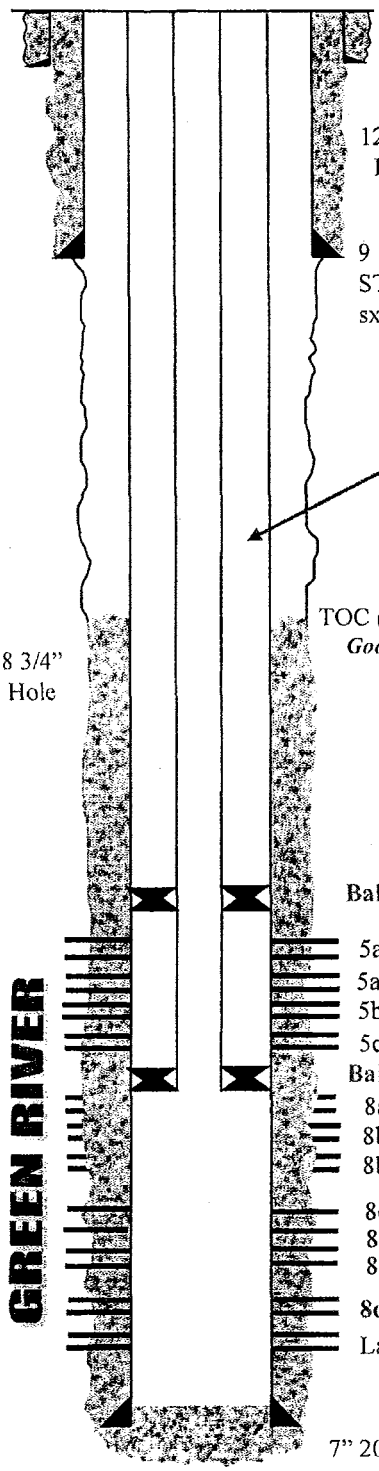

20" conductor @ 40'

12-1/4" Hole

9 5/8" 36# K-55 ST&C @ 420' w/ 220 sx – Circ'd to surface

Treated FW PKR fluid

TOC @ 1560' (CBL 9/9/82)
Good Bond starts ~3140'

8 3/4" Hole

Baker Snap-Set PKR @ ~4850'

5a: 4902' – 4922' w/ 4 spf (Acidize 10/82)
5a2: 4964' – 4970' w/ 4 spf (Acidize 10/82)
5b: 4980' – 5000' w/ 4 spf (Acidize 10/82)
5c: 5008' – 5016' w/ 4 spf (Acidize 10/82)

Baker Model 'R' PKR @ ~5100'

8a: 5406' – 5418' w/ 2 spf (Acidized & Cmt Sqz'd 10/82)
8b: 5474' – 5484' w/ 2 spf (Acidized & Cmt Sqz'd 10/82)
8b: 5488' – 5498' w/ 2 spf (Acidized & Cmt Sqz'd 10/82)

8c: 5508' – 5516' w/ 2 spf (Acidize & Frac 10/82)
8c: 5518' – 5528' w/ 2 spf (Acidize & Frac 10/82)
8c: 5530' – 5538' w/ 2 spf (Acidize & Frac 10/82)

8d: 5574' – 5590' w/ 4 spf (Acidize) **PROPOSED PERFORATIONS**

La: 5600' – 5624' w/ 2 spf (Acidize & Frac 10/82)

7" 20# & 23# K-55 ST&C @ 5781' w/ 1275 sx

PBTD = 5730'
TD = 5790'

PROPOSED Completion Assembly

Qty	Description	Length	Depth
	KB correction	13.00'	13.00'
~156 jts	2 7/8" 6.5# J-55 8rd EUE IPC tbg	4836.00'	4849.00'
1	2 7/8" x 7" Baker 'Snap-Set' PKR	6.10'	4855.10'
~8 jts	2 7/8" 6.5# J-55 8rd EUE IPC tbg	248.00'	5103.10'
1	2 7/8" x 7" Baker Model 'R' PKR w/ WLEG	7.58'	5110.68'

Updated: 10/20/08 - JTT

Form 3160- 5
(April 2004)

UNITED STATES
DEPARTMENT OF THE INTERIOR
BUREAU OF LAND MANAGEMENT

FORM APPROVED
OMB No. 1004- 0137
Expires: March 31, 2007

SUNDRY NOTICES AND REPORTS ON WELLS

Do not use this form for proposals to drill or to re-enter an abandoned well. Use Form 3160-3 (APD) for such proposals.

SUBMIT IN TRIPLICATE *- Other Instructions on reverse side.*

5. Lease Serial No. ML 3175
6. If Indian, Allottee, or Tribe Name
7. If Unit or CA. Agreement Name and/or No. Walker Hollow Unit
8. Well Name and No. Walker Hollow Unit 72
9. API Well No. 43-047-31227
10. Field and Pool, or Exploratory Area Walker Hollow Green River
11. County or Parish, State Uintah Utah

1. Type of Well
[x] Oil Well [ ] Gas Well [ ] Other

2. Name of Operator
Citation Oil & Gas Corp.

3a. Address
P O Box 690688
Houston, Texas 77269

3b. Phone No. *(include area code)*
281-891-1565

4. Location of Well *(Footage, Sec., T., R., M., or Survey Description)*
SW NW 3227' FSL 503' FWL 2 T 7S R 23E Lat. Long.

12. CHECK APPROPRIATE BOX(S) TO INDICATE NATURE OF NOTICE, REPORT, OR OTHER DATA

TYPE OF SUBMISSION	TYPE OF ACTION			
[x] Notice of Intent	[ ] Acidize	[ ] Deepen	[ ] Production (Start/ Resume)	[ ] Water Shut-off
	[ ] Altering Casing	[ ] Fracture Treat	[ ] Reclamation	[ ] Well Integrity
[ ] Subsequent Report	[ ] Casing Repair	[ ] New Construction	[ ] Recomplete	[x] Other Perforate
	[ ] Change Plans	[ ] Plug and abandon	[ ] Temporarily Abandon	
[ ] Final Abandonment Notice	[ ] Convert to Injection	[ ] Plug back	[ ] Water Disposal	

13. Describe Proposed or Completed Operation (clearly state all pertinent details including estimated starting date of any proposed work and approximate duration thereof. If the proposal is to deepen directionally or recomplete horizontally, give subsurface locations and measured and true vertical depths or pertinent markers and sands. Attach the Bond under which the work will performed or provide the Bond No. on file with the BLM/ BIA. Required subsequent reports shall be filed within 30 days following completion of the involved operations. If the operation results in a multiple completion or recompletion in a new interval, a Form 3160-4 shall be filed once testing has been completed. Final Abandonment Notice shall be filed only after all requirements, including reclamantion, have been completed, and the operator has determined that the site is ready for final inspection.)

Citation Oil & Gas Corp. requests permission to add additional perfs in the permitted injection interval per EPA Permit that was approved 6/26/2008. Please see the attached wellbore schematics and procedure.

14.
Name *(Printed/ Typed)* Bridget Lisenbe
Title Permitting Analyst
Signature Bridget Lisenbe
Date 07/07/09

THIS SPACE FOR FEDERAL OR STATE OFFICE USE

Approved by
Title
Date
Conditions of approval, if any are attached. Approval of this notice does not warrant or certify that the applicant holds legal or equitable title to those rights in the subject lease which would entitle the applicant to conduct operations thereon.
Office

Title 18 U.S.C. Section 1001 AND Title 43 U.S.C. Section 1212, make it a crime for any person knowingly and willfully to make any department or agency of the United States any false, fictitiousor fraudulent statements or representations as to any matter within its jurisdiction.

(Instructions on page 2)

FORM 9

STATE OF UTAH
DEPARTMENT OF NATURAL RESOURCES
DIVISION OF OIL, GAS AND MINING

5. LEASE DESIGNATION AND SERIAL NUMBER: ML 3175

SUNDRY NOTICES AND REPORTS ON WELLS

6. IF INDIAN, ALLOTTEE OR TRIBE NAME:

Do not use this form for proposals to drill new wells, significantly deepen existing wells below current bottom-hole depth, reenter plugged wells, or to drill horizontal laterals. Use APPLICATION FOR PERMIT TO DRILL form for such proposals.

7. UNIT or CA AGREEMENT NAME: Walker Hollow Unit UTU66837A

1. TYPE OF WELL: OIL WELL ☑ GAS WELL ☐ OTHER

8. WELL NAME and NUMBER: Walker Hollow Unit #72

2. NAME OF OPERATOR: Citation Oil & Gas Corp.

9. API NUMBER: 4304731227

3. ADDRESS OF OPERATOR: P.O. Box 690688 CITY Houston STATE TX ZIP 77269-0688 PHONE NUMBER: (281) 517-7800

10. FIELD AND POOL, OR WILDCAT: Walker Hollow Green River

4. LOCATION OF WELL

FOOTAGES AT SURFACE: 3227' FSL & 503' FWL COUNTY: Uintah

QTR/QTR, SECTION, TOWNSHIP, RANGE, MERIDIAN: SWNW 2 7S 23E STATE: UTAH

11. CHECK APPROPRIATE BOXES TO INDICATE NATURE OF NOTICE, REPORT, OR OTHER DATA

TYPE OF SUBMISSION	TYPE OF ACTION		
☑ NOTICE OF INTENT (Submit in Duplicate)	☐ ACIDIZE	☐ DEEPEN	☐ REPERFORATE CURRENT FORMATION
Approximate date work will start:	☐ ALTER CASING	☐ FRACTURE TREAT	☐ SIDETRACK TO REPAIR WELL
	☐ CASING REPAIR	☐ NEW CONSTRUCTION	☐ TEMPORARILY ABANDON
	☐ CHANGE TO PREVIOUS PLANS	☐ OPERATOR CHANGE	☐ TUBING REPAIR
	☐ CHANGE TUBING	☐ PLUG AND ABANDON	☐ VENT OR FLARE
☐ SUBSEQUENT REPORT (Submit Original Form Only)	☐ CHANGE WELL NAME	☐ PLUG BACK	☐ WATER DISPOSAL
Date of work completion:	☐ CHANGE WELL STATUS	☐ PRODUCTION (START/RESUME)	☐ WATER SHUT-OFF
	☐ COMMINGLE PRODUCING FORMATIONS	☐ RECLAMATION OF WELL SITE	☑ OTHER: SHUT IN - PENDING CONVERSION
	☐ CONVERT WELL TYPE	☐ RECOMPLETE - DIFFERENT FORMATION	

12. DESCRIBE PROPOSED OR COMPLETED OPERATIONS. Clearly show all pertinent details including dates, depths, volumes, etc.

Citation Oil & Gas Corp. requests approval to retain this well in shut-in status pending conversion to a water injection well. The conversion is planned for Spring, 2009. EPA Permit UT21119-07601 was approved 6/26/2008 (see attached). A Notice of Intent to add perforations was approved by your office 7/20/2009. We are currently awaiting BLM approval to commence this work. Once well is converted to injection and tested for mechanical integrity, injection will commence upon EPA approval.

COPY SENT TO OPERATOR
Date: 8·12·2009
Initials: KS

NAME (PLEASE PRINT) Debra Harris TITLE Regulatory Compliance Coordinator

SIGNATURE Debra Harris DATE 8/4/2009

(This space for State use only) APPROVED BY THE STATE OF UTAH DIVISION OF OIL, GAS, AND MINING
DATE: 8/11/09
BY: [illegible]
* Through 10/1/09

(See Instructions on Reverse Side)

(5/2000)

RECEIVED
AUG 10 2009
DIV. OF OIL, GAS & MINING

From: Debra Harris <DHarris@cogc.com>
To: Joshua Payne <joshuapayne@utah.gov>
Date: 3/7/2011 8:49 AM
Subject: RE: Walker Hollow 72
CC: Armando Lopez-Rocha <ALopez-Rocha@cogc.com>, Kristopher Johnson <KJohnso...
Attachments: WHU 72 EXT.pdf

Mr. Payne,

The EPA injection permit for the Walker Hollow Unit 72 expired 12/16/2009. Per the attached, after field evaluation and the assignment of this field to new engineers, we have received EPA approval to convert the USA Pearl Broadhurst 20, Walker Hollow Unit 39 and 43 to injectors. Budget approval to convert the 43 and install the necessary lines has been received, so after conversion of the 43 and the impact of the additional waterflood is realized, additional conversions and reactivations are expected. The Walker Hollow Unit 72 has been designated a reactivation rather than a conversion, pending waterflood response and economics.

Please advise if you need additional information – thank you,

Debra Harris
CITATION OIL & GAS CORP.
Regulatory Compliance Coordinator
(281) 891-1576 - Phone
(281) 580-2194 - Fax

From: Joshua Payne [mailto:joshuapayne@utah.gov]
Sent: Monday, March 07, 2011 9:15 AM
To: Debra Harris
Subject: Walker Hollow 72

7S 23E 2

Ms. Harris,

I am writing to see what the status is on the Walker Hollow 72 well (API# 43-047-31227) in regard to being converted to an injection well? If you would call or e-mail so I may update our Shut in / Temporarily Abandoned records I would appreciate it.
Thank you,

Joshua Payne
Engineering Technician
Utah Division of Oil & Gas
801-538-5314

Form 3160-5
(August 2007)

UNITED STATES
DEPARTMENT OF THE INTERIOR
BUREAU OF LAND MANAGEMENT

FORM APPROVED
OMB No. 1004-0137
Expires: July 31, 2010

SUNDRY NOTICES AND REPORTS ON WELLS

Do not use this form for proposals to drill or to re-enter an abandoned well. Use Form 3160-3 (APD) for such proposals.

SUBMIT IN TRIPLICATE – Other instructions on page 2.

5. Lease Serial No.
ML 3175

6. If Indian, Allottee or Tribe Name

7. If Unit of CA/Agreement, Name and/or No.
Walker Hollow UTU66837A

1. Type of Well
☑ Oil Well ☐ Gas Well ☐ Other

8. Well Name and No.
Walker Hollow Unit 72

2. Name of Operator
Citation Oil & Gas Corp.

9. API Well No.
43-047-31227

3a. Address
P.O. Box 690688, Houston TX 77269-0688

3b. Phone No. *(include area code)*
(281) 891-1576

10. Field and Pool or Exploratory Area
Walker Hollow Green River

4. Location of Well *(Footage, Sec., T.,R.,M., or Survey Description)*
3227' FSL & 503' FWL; Sec. 2, T7S, R23E; SW NW

11. Country or Parish, State
Uintah County, Utah

12. CHECK THE APPROPRIATE BOX(ES) TO INDICATE NATURE OF NOTICE, REPORT OR OTHER DATA

TYPE OF SUBMISSION	TYPE OF ACTION			
☒ Notice of Intent	☐ Acidize	☐ Deepen	☐ Production (Start/Resume)	☐ Water Shut-Off
	☐ Alter Casing	☐ Fracture Treat	☐ Reclamation	☐ Well Integrity
☑ Subsequent Report	☐ Casing Repair	☐ New Construction	☐ Recomplete	☑ Other Retain well in SI Status
	☐ Change Plans	☐ Plug and Abandon	☐ Temporarily Abandon	
☐ Final Abandonment Notice	☐ Convert to Injection	☐ Plug Back	☐ Water Disposal	

13. Describe Proposed or Completed Operation: Clearly state all pertinent details, including estimated starting date of any proposed work and approximate duration thereof. If the proposal is to deepen directionally or recomplete horizontally, give subsurface locations and measured and true vertical depths of all pertinent markers and zones. Attach the Bond under which the work will be performed or provide the Bond No. on file with BLM/BIA. Required subsequent reports must be filed within 30 days following completion of the involved operations. If the operation results in a multiple completion or recompletion in a new interval, a Form 3160-4 must be filed once testing has been completed. Final Abandonment Notices must be filed only after all requirements, including reclamation, have been completed and the operator has determined that the site is ready for final inspection.)

Citation Oil & Gas Corp. requests approval to retain this well in an inactive status for potential reactivation. Since the beginning of 2010, we have two new engineers working on evaluations and procedures for the expansion of this field. We have received EPA injection permit approval to convert the USA Pearl Broadhurst 20, Walker Hollow Unit 39 and Walker Hollow Unit 43 to injection and received budget approval to convert the Walker Hollow Unit 43 and construct the additional injection lines necessary. Once impact of additional waterflood is realized after the Walker Hollow Unit 43 is converted to injection, additional conversions and reactivations will follow, pending waterflood response and economical justification of the project at that time.

RECEIVED
NOV 15 2010
BLM VERNAL, UTAH

14. I hereby certify that the foregoing is true and correct. Name *(Printed/Typed)*
Debra Harris

Title Regulatory Compliance Coordinator

Signature Debra Harris

Date 11/10/2010

THIS SPACE FOR FEDERAL OR STATE OFFICE USE

Approved by ACCEPTED BY BLM FOR UNIT PURPOSES ONLY

Title

Date DEC 06 2010

Conditions of approval, if any, are attached. Approval of this notice does not warrant or certify that the applicant holds legal or equitable title to those rights in the subject lease which would entitle the applicant to conduct operations thereon.

Office VERNAL FIELD OFFICE

Title 18 U.S.C. Section 1001 and Title 43 U.S.C. Section 1212, make it a crime for any person knowingly and willfully to make to any department or agency of the United States any false, fictitious or fraudulent statements or representations as to any matter within its jurisdiction.

(Instructions on page 2)

OPERATOR CTR, DH

GARY R. HERBERT
Governor

GREGORY S. BELL
Lieutenant Governor

State of Utah

DEPARTMENT OF NATURAL RESOURCES

MICHAEL R. STYLER
Executive Director

Division of Oil, Gas and Mining

JOHN R. BAZA
Division Director

April 14, 2011

CERTIFIED MAIL NO.: 7005 1820 0001 5562 9030

Debra Harris
Citation Oil & Gas Corp
P.O. Box 690688
Houston, TX 77269-0688

43 047 31227
Walker Hollow 72
7S 23E 2

Subject: **SECOND NOTICE:** Extended Shut-in and Temporarily Abandoned Well Requirements for Wells on Fee or State Leases

Dear Ms. Harris:

As of January 2011, Citation Oil & Gas Corp (Citation) has one (1) State Lease Well (see Attachment A) that is currently in non-compliance with the requirements for extended shut-in or temporarily abandoned (SI/TA) status. Wells SI/TA beyond twelve (12) consecutive months requires the filing of a Sundry Notice in accordance with R649-3-36-1 for Utah Division of Oil, Gas & Mining (Division) approval. Wells with five (5) years non-activity or non-productivity shall be plugged, unless the Division grants approval for extended shut-in time upon a showing of good cause by the operator (R649-3-36-1.3.3).

This is the **SECOND NOTICE** of non-compliance that Citation has received for the above mentioned well. On July 28, 2008, a first notice was sent via certified mail requesting required information to bring this well into compliance. On August 21, 2008, Citation responded with a letter stating a sundry for conversion to water injection had been sent to our office. On January 20, 2009, the Division responded via certified mail requesting further information required by R649-3-36. Citation's sundry dated August 4, 2009, requested shut in status pending conversion to a water injection well by the spring of 2009. It was also stated in the sundry that the EPA permit was approved. Based on the intent to convert this to an injection well, the Division granted Citation SI/TA extension status valid through October 1, 2009. This provided ample time to complete Citation's plans according to their request. To date the Division has discovered that Citations EPA permit has since expired and no work has been performed on this well. The Division has not received any additional information concerning well integrity or noted any progress toward moving this well out of non-compliance status.

Please submit the required information for extended SI/TA status within 30 days of this notice or further actions will be initiated.

For extended SI/TA consideration the operator shall provide the Utah Division of Oil, Gas & Mining with the following:

1. Reasons for SI/TA of the well (R649-3-36-1.1).

2. The length of time the well is expected to be SI/TA (R649-3-36-1.2), and

3. An explanation and supporting data if necessary, for showing the well has integrity, meaning that the casing, cement, equipment condition, static fluid level, pressure, existence or absence of Underground Sources of Drinking Water and other factors do not make the well a risk to public health and safety or the environment (R649-3-36-1.3).

Please note that the Divisions preferred method for showing well integrity is by MIT

Submitting the information suggested below may help show well integrity and may help qualify your well for extended SI/TA. **Note: As of July 1, 2003, wells in violation of the SI/TA rule R649-3-36 may be subject to full cost bonding (R649-3-1-4.2, 4.3).**

1. Wellbore diagram, and
2. Copy of recent casing pressure test, and
3. Current pressures on the wellbore (tubing pressure, casing pressure, and casing/casing annuli pressure) showing wellbore has integrity, and
4. Fluid level in the wellbore, and
5. An explanation of how the submitted information proves integrity.

If the required information is not received within 30 days of the date of this notice, further actions may be initiated. If you have any questions concerning this matter, please contact me at (801) 538-5281.

Sincerely,

Dustin K. Doucet
Petroleum Engineer

DKD/JP/js
Enclosure
cc: Compliance File
Well File
LaVonne Garrison, SITLA

N:\O&G Reviewed Docs\ChronFile\PetroleumEngineer\SITA

ATTACHMENT A

	Well Name	API	LEASE	Years Inactive	SI/TA Extension Expired On
2ND NOTICE					
1	WALKER HOLLOW 72	43-047-31227	ML-3175	4 Years 3 Months	10/1/2009

Citation
OIL & GAS CORP.

May 12, 2011

State of Utah
Division of Oil, Gas and Mining
1594 West North Temple, Suite 1210
Sale Lake City, Utah 84114-5801

ATTN: Mr. Dustin Doucet, Petroleum Engineer

Re: SECOND NOTICE: Extended Shut-In and Temporarily Abandoned Well Requirements for wells on Fee or State Leases
Walker Hollow Unit 72; API 43-047-31227

Mr. Doucette, 7S 23E 2

Citation received the referenced notice letter on 4/26/2011. As stated in that letter, the EPA injection permit expired 12/16/2009 due to the change in scope of the Walker Hollow waterflood project as it was scaled down due the drop in oil and gas prices in 2009. Additional evaluation of the field showed that it would be more beneficial to convert the Walker Hollow Unit 39 and 43 wells to injection. We began conversion of the Walker Hollow 43 yesterday. Feasibility of reactivations of shut in wells in this field, including well 72, will be based on injection response by the Walker Hollow 43 conversion. Consequently, all reactivations are contingent upon the results of this conversion. The timeframe expected to observe a waterflood response to justify field wide reactivations is six months after commencing injection.

Production equipment is still in well No. 72 per the attached wellbore diagram. In the interest of future work in this field, we are requesting continued shut-in status without pulling downhole equipment for future reactivation work. Wellbore mechanical integrity is at low risk given that no tubing or casing pressure has been observed; indicating below surface sonic fluid level is from native formation fluid. A table is attached which should address state requirements for SI and TA extensions.

If you need additional information please contact me at (281) 891-1576 or via email at dharris@cogc.com.

APPROVED BY THE STATE OF UTAH DIVISION OF OIL, GAS, AND MINING
DATE: 8/3/2011
BY: [signature]
*Ext. Valid through 5/1/2012 ongoing monitoring of pressures / fluid levels should continue to ensure continued integrity.

COPY SENT TO OPERATOR
Date: AUG 08 2011
Initials: KS

RECEIVED
MAY 16 2011
DIV. OF OIL, GAS & MINING

Sincerely,

Debra Harris

Debra Harris
Regulatory Compliance Coordinator

/dkh
Attachments
xc: CTR

WALKER HOLLOW UNIT 72 ***SHUT IN STATUS EXTENSION REQUEST ATTACHMENT***

REASON FOR REQUEST:

The subject well was shut in as uneconomical in October, 2006 due to low oil production. This well has been determined to be a potential candidate for reactivation or conversion, contingent upon waterflood response from Walker Hollow 43 to offset producers. The first conversion of the Walker Hollow 43 began 5/11/2011 and at least six months is the time estimated to obtain waterflood response.

LENGTH OF TIME FOR REQUEST:

At present, the length of time the well is requested for extension of shut in status is unknown since reactivation will depend upon the length of time it takes to realize a waterflood response once we are actively injecting into the Walker Hollow 43; however, we are encouraged that reactivations in this field could begin as early as next year.

INFORMATION SUPPORTING WELL INTEGRITY:

Well has not been pressure tested for mechanical integrity due to production equipment remaining in the well since the last pump change in October 2006. A wellbore schematic prepared in 2008 is attached showing open perfs 4902' - 5016' & 5508' - 5624'. Cement bond log shows TOC estimated @1560' with "good" bond beginning @ 3140', well above the top of the open perforations (a copy of CBL is enclosed for your review). Production equipment must be pulled in order to test the well for mechanical integrity. Given that the No. 72 is a candidate for reactivation or conversion, an extension of shut-in status approval will be needed until it is reactivated.

Additional documentation as provided to EPA for expired approval of Injection Permit, such as: AOR plat of well; 1/2 mile AOR table listing 3 wells located on State Lease ML 3175; recap of last workover in 2005 showing current casing, cementing, perforation record and equipment in well

An approved Notice of Intent sundry to reactivate the well with procedure for reactivation (2005 sundry) is included with attachments, which is presumably the same procedure to be used for future reactivation (upon DOGM approval) with current Notice of Intent submittal

Should reactivation be unsuccessful, a copy of the EPA approved Plug and Abandonment Plan is also attached for your review. Until such time a Notice of Intent to either officially Temporarily Abandon or Plug and Abandon the well will be submitted to your office for approval.

5/11/2011 Tubing Pressure – 0 psi
5/11/2011 Casing Pressure – 0 psi
5/11/2011 Fluid Level – 341' from surface

GARY R. HERBERT
Governor

GREGORY S. BELL
Lieutenant Governor

State of Utah

DEPARTMENT OF NATURAL RESOURCES

MICHAEL R. STYLER
Executive Director

Division of Oil, Gas and Mining
JOHN R. BAZA
Division Director

RECEIVED
APR 26 2011
PRODUCTION DEPT.

April 14, 2011

CERTIFIED MAIL NO.: 7005 1820 0001 5562 9030

Debra Harris
Citation Oil & Gas Corp
P.O. Box 690688
Houston, TX 77269-0688

Subject: **SECOND NOTICE:** Extended Shut-in and Temporarily Abandoned Well Requirements for Wells on Fee or State Leases

Dear Ms. Harris:

As of January 2011, Citation Oil & Gas Corp (Citation) has one (1) State Lease Well (see Attachment A) that is currently in non-compliance with the requirements for extended shut-in or temporarily abandoned (SI/TA) status. Wells SI/TA beyond twelve (12) consecutive months requires the filing of a Sundry Notice in accordance with R649-3-36-1 for Utah Division of Oil, Gas & Mining (Division) approval. Wells with five (5) years non-activity or non-productivity shall be plugged, unless the Division grants approval for extended shut-in time upon a showing of good cause by the operator (R649-3-36-1.3.3).

This is the **SECOND NOTICE** of non-compliance that Citation has received for the above mentioned well. On July 28, 2008, a first notice was sent via certified mail requesting required information to bring this well into compliance. On August 21, 2008, Citation responded with a letter stating a sundry for conversion to water injection had been sent to our office. On January 20, 2009, the Division responded via certified mail requesting further information required by R649-3-36. Citation's sundry dated August 4, 2009, requested shut in status pending conversion to a water injection well by the spring of 2009. It was also stated in the sundry that the EPA permit was approved. Based on the intent to convert this to an injection well, the Division granted Citation SI/TA extension status valid through October 1, 2009. This provided ample time to complete Citation's plans according to their request. To date the Division has discovered that Citations EPA permit has since expired and no work has been performed on this well. The Division has not received any additional information concerning well integrity or noted any progress toward moving this well out of non-compliance status.

Please submit the required information for extended SI/TA status within 30 days of this notice or further actions will be initiated.

CYP
MHW

1594 West North Temple, Suite 1210, PO Box 145801, Salt Lake City, UT 84114 -5801
telephone (801) 538-5340 • facsimile (801) 359-3940 • TTY (801) 538-7458 • *www.ogm.utah.gov*

UTAH DNR
OIL, GAS & MINING

For extended SI/TA consideration the operator shall provide the Utah Division of Oil, Gas & Mining with the following:

1. Reasons for SI/TA of the well (R649-3-36-1.1).

2. The length of time the well is expected to be SI/TA (R649-3-36-1.2), and

3. An explanation and supporting data if necessary, for showing the well has integrity, meaning that the casing, cement, equipment condition, static fluid level, pressure, existence or absence of Underground Sources of Drinking Water and other factors do not make the well a risk to public health and safety or the environment (R649-3-36-1.3).

Please note that the Divisions preferred method for showing well integrity is by MIT

Submitting the information suggested below may help show well integrity and may help qualify your well for extended SI/TA. **Note: As of July 1, 2003, wells in violation of the SI/TA rule R649-3-36 may be subject to full cost bonding (R649-3-1-4.2, 4.3).**

1. Wellbore diagram, and
2. Copy of recent casing pressure test, and
3. Current pressures on the wellbore (tubing pressure, casing pressure, and casing/casing annuli pressure) showing wellbore has integrity, and
4. Fluid level in the wellbore, and
5. An explanation of how the submitted information proves integrity.

If the required information is not received within 30 days of the date of this notice, further actions may be initiated. If you have any questions concerning this matter, please contact me at (801) 538-5281.

Sincerely,

Dustin K. Doucet
Petroleum Engineer

DKD/JP/js
Enclosure
cc: Compliance File
Well File
LaVonne Garrison, SITLA

N:\O&G Reviewed Docs\ChronFile\PetroleumEngineer\SITA

ATTACHMENT A

	Well Name	API	LEASE	Years Inactive	SI/TA Extension Expired On
			2ND NOTICE		
1	WALKER HOLLOW 72	43-047-31227	ML-3175	4 Years 3 Months	10/1/2009

Debra Harris

From: Debra Harris
Sent: Monday, March 07, 2011 9:49 AM
To: 'Joshua Payne'
Cc: Armando Lopez-Rocha; Kristopher Johnson
Subject: RE: Walker Hollow 72
Attachments: WHU 72 EXT.pdf

Mr. Payne,

The EPA injection permit for the Walker Hollow Unit 72 expired 12/16/2009. Per the attached, after field evaluation and the assignment of this field to new engineers, we have received EPA approval to convert the USA Pearl Broadhurst 20, Walker Hollow Unit 39 and 43 to injectors. Budget approval to convert the 43 and install the necessary lines has been received, so after conversion of the 43 and the impact of the additional waterflood is realized, additional conversions and reactivations are expected. The Walker Hollow Unit 72 has been designated a reactivation rather than a conversion, pending waterflood response and economics.

Please advise if you need additional information – thank you,

Debra Harris
CITATION OIL & GAS CORP.
Regulatory Compliance Coordinator
(281) 891-1576 - Phone
(281) 580-2194 - Fax

From: Joshua Payne [mailto:joshuapayne@utah.gov]
Sent: Monday, March 07, 2011 9:15 AM
To: Debra Harris
Subject: Walker Hollow 72

Ms. Harris,

I am writing to see what the status is on the Walker Hollow 72 well (API# 43-047-31227) in regard to being converted to an injection well? If you would call or e-mail so I may update our Shut in / Temporarily Abandoned records I would appreciate it. Thank you,

Joshua Payne
Engineering Technician
Utah Division of Oil & Gas
801-538-5314

Form 3160-5
(August 2007)

UNITED STATES
DEPARTMENT OF THE INTERIOR
BUREAU OF LAND MANAGEMENT

FORM APPROVED
OMB No. 1004-0137
Expires: July 31, 2010

SUNDRY NOTICES AND REPORTS ON WELLS

Do not use this form for proposals to drill or to re-enter an abandoned well. Use Form 3160-3 (APD) for such proposals.

SUBMIT IN TRIPLICATE – *Other instructions on page 2.*

5. Lease Serial No.
ML 3175

6. If Indian, Allottee or Tribe Name

7. If Unit of CA/Agreement, Name and/or No.
Walker Hollow UTU66837A

1. Type of Well
☑ Oil Well ☐ Gas Well ☐ Other

8. Well Name and No.
Walker Hollow Unit 72

2. Name of Operator
Citation Oil & Gas Corp.

9. API Well No.
43-047-31227

3a. Address
P.O. Box 690688, Houston TX 77269-0688

3b. Phone No. *(include area code)*
(281) 891-1576

10. Field and Pool or Exploratory Area
Walker Hollow Green River

4. Location of Well *(Footage, Sec., T.,R.,M., or Survey Description)*
3227' FSL & 503' FWL; Sec. 2, T7S, R23E; SW NW

11. Country or Parish, State
Uintah County, Utah

12. CHECK THE APPROPRIATE BOX(ES) TO INDICATE NATURE OF NOTICE, REPORT OR OTHER DATA

TYPE OF SUBMISSION	TYPE OF ACTION			
☒ Notice of Intent	☐ Acidize	☐ Deepen	☐ Production (Start/Resume)	☐ Water Shut-Off
	☐ Alter Casing	☐ Fracture Treat	☐ Reclamation	☐ Well Integrity
☑ Subsequent Report	☐ Casing Repair	☐ New Construction	☐ Recomplete	☑ Other Retain well in SI Status
	☐ Change Plans	☐ Plug and Abandon	☐ Temporarily Abandon	
☐ Final Abandonment Notice	☐ Convert to Injection	☐ Plug Back	☐ Water Disposal	

13. Describe Proposed or Completed Operation: Clearly state all pertinent details, including estimated starting date of any proposed work and approximate duration thereof. If the proposal is to deepen directionally or recomplete horizontally, give subsurface locations and measured and true vertical depths of all pertinent markers and zones. Attach the Bond under which the work will be performed or provide the Bond No. on file with BLM/BIA. Required subsequent reports must be filed within 30 days following completion of the involved operations. If the operation results in a multiple completion or recompletion in a new interval, a Form 3160-4 must be filed once testing has been completed. Final Abandonment Notices must be filed only after all requirements, including reclamation, have been completed and the operator has determined that the site is ready for final inspection.)

Citation Oil & Gas Corp. requests approval to retain this well in an inactive status for potential reactivation. Since the beginning of 2010, we have two new engineers working on evaluations and procedures for the expansion of this field. We have received EPA injection permit approval to convert the USA Pearl Broadhurst 20, Walker Hollow Unit 39 and Walker Hollow Unit 43 to injection and received budget approval to convert the Walker Hollow Unit 43 and construct the additional injection lines necessary. Once impact of additional waterflood is realized after the Walker Hollow Unit 43 is converted to injection, additional conversions and reactivations will follow, pending waterflood response and economical justification of the project at that time.

RECEIVED
NOV 15 2010
BLM VERNAL, UTAH

14. I hereby certify that the foregoing is true and correct. Name *(Printed/Typed)*
Debra Harris

Title Regulatory Compliance Coordinator

Signature Debra Harris

Date 11/10/2010

THIS SPACE FOR FEDERAL OR STATE OFFICE USE

Approved by ACCEPTED BY BLM FOR UNIT PURPOSES ONLY

Title

Date DEC 06 2010

Conditions of approval, if any, are attached. Approval of this notice does not warrant or certify that the applicant holds legal or equitable title to those rights in the subject lease which would entitle the applicant to conduct operations thereon.

Office VERNAL FIELD OFFICE

Title 18 U.S.C. Section 1001 and Title 43 U.S.C. Section 1212, make it a crime for any person knowingly and willfully to make to any department or agency of the United States any false, fictitious or fraudulent statements or representations as to any matter within its jurisdiction.

(Instructions on page 2)

OPERATOR CR, DH

CITATION OIL & GAS CORP.
WALKER HOLLOW UNIT #72
3227' FSL, 503' FWL, (SW NW) Section 2 - T7S - R3E
UINTAH CO., UTAH
Current Status: SI Producer

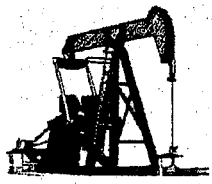

Lufkin M456D-305-144
Ajax DP60

API No: 43-047-31227

Elevation: 5339' GL
KB = 15' AGL

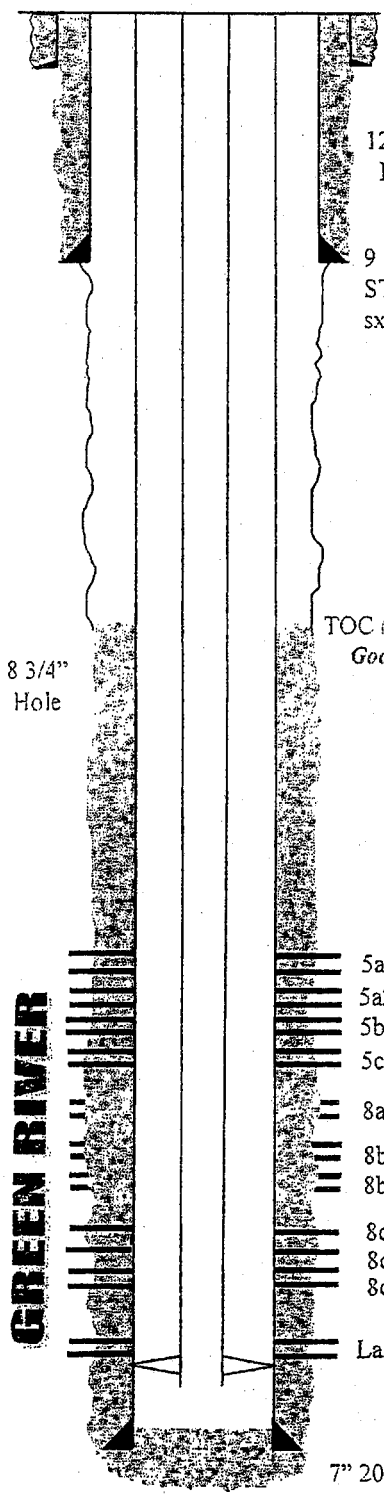

20" conductor @ 40'

12-1/4" Hole

9 5/8" 36# K-55 ST&C @ 420' w/ 220 sx – Circ'd to surface

TOC @ 1560' (CBL 9/9/82)
Good Bond starts ~3140'

8 3/4" Hole

5a: 4902' – 4922' w/ 4 spf (Acidize 10/82)
5a2: 4964' – 4970' w/ 4 spf (Acidize 10/82)
5b: 4980' – 5000' w/ 4 spf (Acidize 10/82)
5c: 5008' – 5016' w/ 4 spf (Acidize 10/82)

8a: 5406' – 5418' w/ 2 spf (Acidize & Cmt Sqz'd 10/82)

8b: 5474' – 5484' w/ 2 spf (Acidized & Cmt Sqz'd 10/82)
8b: 5488' – 5498' w/ 2 spf (Acidized & Cmt Sqz'd 10/82)

8c: 5508' – 5516' w/ 2 spf (Acidize & Frac 10/82)
8c: 5518' – 5528' w/ 2 spf (Acidize & Frac 10/82)
8c: 5530' – 5538' w/ 2 spf (Acidize & Frac 10/82)

La: 5600' – 5624' w/ 2 spf (Acidize & Frac 10/82)

7" 20# & 23# K-55 ST&C @ 5781' w/ 1275 sx

PBTD = 5730'
TD = 5790'

Completion Assembly (4/23/03)

Qty	Description	Length	Depth
	KB correction	13.00'	13.00'
182 jts	2 7/8" 6.5# J-55 8rd EUE tbg	5640.62'	5653.62'
1	2 7/8" SN	1.10'	5654.72'
1	2 7/8" x 7" TAC @ 5655' KB	2.37'	5657.09'
1jt	2 7/8" 6.5# J-55 8rd EUE tbg	31.75'	5688.84'
1	2 7/8" Notched Collar	0.45'	5689.29'

Rod/Pump DETAIL (6/20/05)

Qty	Size	Length	Depth
	PR &Liner		
4	2', 4', 6', 6' x 1"	18.00'	18.00'
63	1" Grade D SR	1575.00'	1593.00'
75	7/8" Grade D SR	1875.00'	3468.00'
75	3/4" Grade D SR	1875.00'	5343.00'
11	1" Grade D SR	275.00'	5618.00'
Pump: 2 1/2" x 13/4" x 20' x 22 1/2' RHAC, EX-71			

Updated: 10/20/08 - JTT

OMB No. 2040-0042 Approval Expires 4/30/07

United States Environmental Protection Agency
Washington, DC 20460

PLUGGING AND ABANDONMENT PLAN

Name and Address of Facility
Walker Hollow Unit 72
43-047-31227

Name and Address of Owner/Operator
Citation Oil & Gas Corp.
P O Box 690688, Houston, Texas 77269

State: Utah
County: Uintah
Permit Number:

Locate Well and Outline Unit on Section Plat - 640 Acres

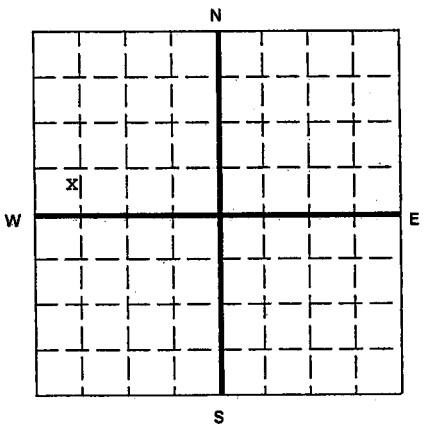

Surface Location Description
SW 1/4 of NW 1/4 of ___ 1/4 of ___ 1/4 of Section 2 Township 7S Range 23E

Locate well in two directions from nearest lines of quarter section and drilling unit

Surface Location 3227 ft. frm (N/S) S Line of quarter section
and 503 ft. from (E/W) W Line of quarter section.

TYPE OF AUTHORIZATION
- [x] Individual Permit
- [ ] Area Permit
- [ ] Rule

Number of Wells 1

Lease Name: Walker Hollow Unit

WELL ACTIVITY
- [ ] CLASS I
- [x] CLASS II
  - [ ] Brine Disposal
  - [x] Enhanced Recovery
  - [ ] Hydrocarbon Storage
- [ ] CLASS III

Well Number: 72

CASING AND TUBING RECORD AFTER PLUGGING

SIZE	WT (LB/FT)	TO BE PUT IN WELL (FT)	TO BE LEFT IN WELL (FT)	HOLE SIZE
9 5/8"	36#	420'	420'	12 1/4"
7"	20 & 23#	5781'	5781'	7 7/8"

METHOD OF EMPLACEMENT OF CEMENT PLUGS
- [x] The Balance Method
- [ ] The Dump Bailer Method
- [ ] The Two-Plug Method
- [ ] Other

CEMENTING TO PLUG AND ABANDON DATA:	PLUG #1	PLUG #2	PLUG #3	PLUG #4	PLUG #5	PLUG #6	PLUG #7
Size of Hole or Pipe in which Plug Will Be Placed (inche	7"	7"	7"	7"	Annulus		
Depth to Bottom of Tubing or Drill Pipe (ft	5350'	4850'	485'	75'	75'		
Sacks of Cement To Be Used (each plug)	75	75	25	15	12		
Slurry Volume To Be Pumped (cu. ft.)							
Calculated Top of Plug (ft.)	5225'	4725'	350'	Surface	Surface		
Measured Top of Plug (if tagged ft.)							
Slurry Wt. (Lb./Gal.)							
Type Cement or Other Material (Class III)	LFL cmt	LFL cmt	Class G	Class G	Class G		

LIST ALL OPEN HOLE AND/OR PERFORATED INTERVALS AND INTERVALS WHERE CASING WILL BE VARIED (if any)

From	To	From	To
4902-5624			

Estimated Cost to Plug Wells
$ 82,530.00

Certification

I certify under the penalty of law that I have personally examined and am familiar with the information submitted in this document and all attachments and that, based on my inquiry of those individuals immediately responsible for obtaining the information, I believe that the information is true, accurate, and complete. I am aware that there are significant penalties for submitting false information, including the possibliity of fine and imprisonment. (Ref. 40 CFR 144.32)

Name and Official Title *(Please type or print)*	Signature	Date Signed
Sharon Ward Permitting Manager	Sharon Ward	01/05/2007

EPA Form 7520-14 (Rev. 8-01)

APPENDIX E

PLUGGING AND ABANDONMENT REQUIREMENTS

At a minimum, the following plugs are required:

PLUG NO. 1: Set a Cast Iron Cement Retainer (CICR) at approximately 5350 feet and pump approximately 50 sx of cement below the retainer. Place at least 20 feet of cement on top of CICR.

PLUG NO. 2: Set a CICR approximately 50 feet above uppermost perforation and pump approximately 50 sx of cement below the retainer. Place at least 20 feet of cement on top of CICR.

PLUG NO. 3: Set a cement plug inside 7 inch casing from approximately 3300 feet to 3400 feet (top of confining zone).

PLUG NO. 4: Set a cement plug inside and outside the 7 inch casing from approximately 350 feet to 485 feet across the surface casing footing.

PLUG NO. 5: Set a surface plug inside and outside the 7 inch casing at least 50 feet from surface.

NOTE: Plug placement must be verified by tagging the top of the plug after the cement has had adequate time to set

CITATION OIL & GAS CORP.
WALKER HOLLOW UNIT #72
3270' FSL, 500' FWL, Section 2-7S-3E
UINTAH CO., UTAH
P&A Proposal

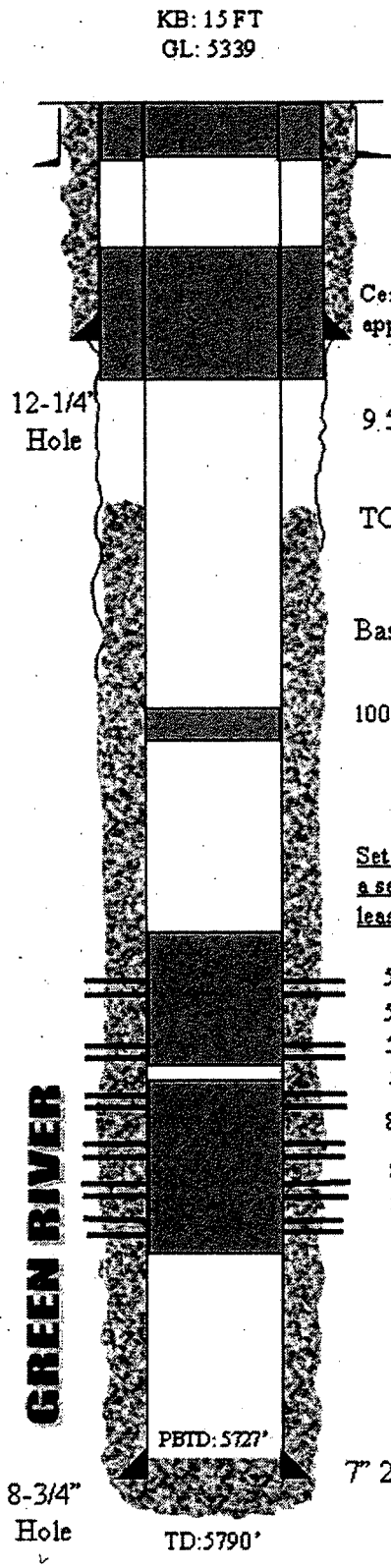

At least a 50' surface plug inside and outside of 7" casing

20" @ 40'

Cement plug inside and outside of 7" casing from approximately 350' – 485'

9 5/8" 36# K-55 @ 420'

TOC @ +/- 1560'

Base of USDW @ 3148'

100' cement from approximately 3300' to 3400' (top of confining zone)

Set CICR ~5350' and squeeze 50 sx of cement below, with at least 20' cement on top, set a second CICR ~50' above top perforation and squeeze 50 sx of cement below, with at least 20' cement on top.

Upper Green River

5a 4902' – 4922' 4JSPF (Compl & Acid 11/82)
5a2 4964' – 4970' 4JSPF (Compl & Acid 11/82)
5b 4980' – 5000' 4JSPF (Compl & Acid 11/82)
5c 5008' – 5016' 4JSPF (Compl & Acid 11/82)
8a 5406' – 5418' 2 JSPF (Compl & Acid & SQZ 11/82)
8b 5474' – 5484' & 5488' – 5498' 2 JSPF (Compl & Acid & SQZ 11/82)
8c 5508' – 5516' 5518' – 5528' & 5530' – 5538' 2 JSPF (Compl & Acid: 11/82, Frac'd 11/82)
DL1a 5600' – 5624' 2 JSPF (Compl & Acid: 11/82, Frac'd 11/82)

7" 20 & 23# @ 5780'

UT21119-07601_P&A_WHU72.jpg

ATTACHMENT A-1

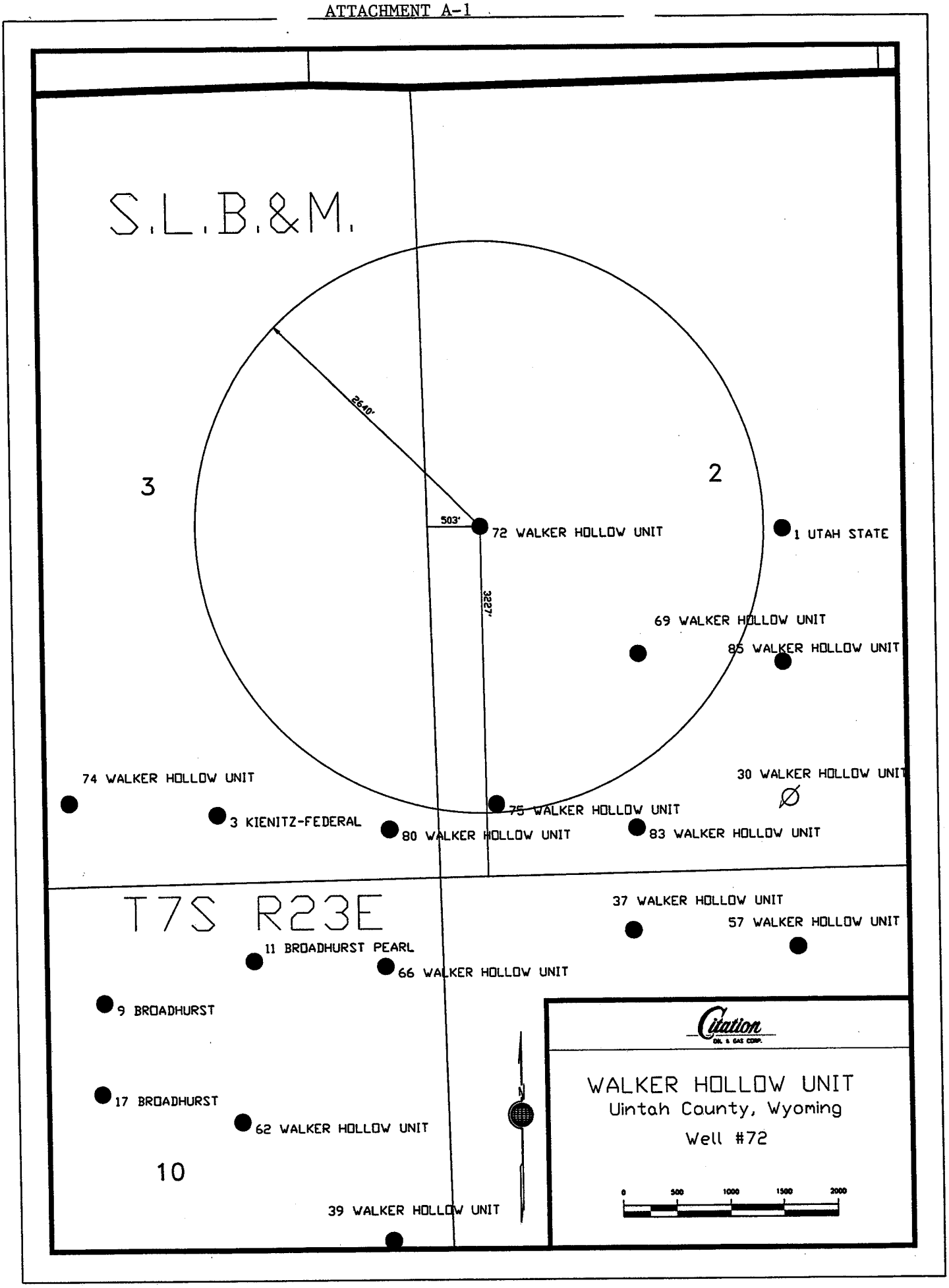

WALKER HOLLOW UNIT 72
LEASE # ML 3175
1/2 MILE AREA OF REVIEW
WALKER HOLLOW FIELD
UINTAH COUNTY, UTAH

ATTACHMENT A-2

API	43-047-31227	43-047-31665	43-047-31182
OPERATOR	CITATION OIL & GAS CORP	CITATION OIL & GAS CORP	CITATION OIL & GAS CORP
WELL NAME	WALKER HOLLOW 72	WALKER HOLLOW U 69	WALKER HOLLOW U 75
TYPE	Oil Well	Oil Well	Oil Well
STATUS	Producing Well	Producing Well	Producing Well
LEASE NO.	ML 3175	ML 3175	ML 3175
BOND NO.	MT0630	MT0630	MT0630
FIELD	WALKER HOLLOW	WALKER HOLLOW	WALKER HOLLOW
County	UINTAH	UINTAH	UINTAH
TWP/RNG	7S-23E	7S-23E	7S-23E
Section	2	2	2
Qtr/Qtr	SWNW	NESW	SWSW
FOOTAGES	3227 FSL 503 FWL	2015 FSL 1928 FWL	665 FSL 552 FWL
ELEVATION	5339	5341	5417
PERFORATIONS	4902-5624	5412-5535	4868-5566
TD	5790	5708	5815

CITATION OIL & GAS CORP.
APPLICATION FOR APPROVAL OF CLASS II INJECTION WELL
WALKER HOLLOW UNIT 72
WALKER HOLLOW (GREEN RIVER) FIELD
LEASE # ML-3175

ATTACHMENT B

Submit a topographic map, extending one mile beyond the property boundaries, showing the injection well(s) or project area for which a permit is sought and the applicable area of review.

There are no hazardous waste, treatment, storage or disposal facilities within a one-mile radius of the property boundaries.

Attachment B-1	Area of Review
Attachment B-2	Proposed and Existing Water Lines
Attachment B-3	Topo map

FORM 9

STATE OF UTAH
DEPARTMENT OF NATURAL RESOURCES
DIVISION OF OIL, GAS AND MINING

5. LEASE DESIGNATION AND SERIAL NUMBER: ML 3175

SUNDRY NOTICES AND REPORTS ON WELLS

6. IF INDIAN, ALLOTTEE OR TRIBE NAME:

Do not use this form for proposals to drill new wells, significantly deepen existing wells below current bottom-hole depth, reenter plugged wells, or to drill horizontal laterals. Use APPLICATION FOR PERMIT TO DRILL form for such proposals.

7. UNIT or CA AGREEMENT NAME: Walker Hollow Unit UTU66837A

1. TYPE OF WELL: OIL WELL ☑ GAS WELL ☐ OTHER _____

8. WELL NAME and NUMBER: Walker Hollow Unit # 72

2. NAME OF OPERATOR: Citation Oil & Gas Corp.

9. API NUMBER: 4304731227

3. ADDRESS OF OPERATOR: P O Box 690688 CITY Houston STATE TX ZIP 77269

PHONE NUMBER: (281) 891-1569

10. FIELD AND POOL, OR WILDCAT: Walker Hollow Green River

4. LOCATION OF WELL

FOOTAGES AT SURFACE: 3227' FSL & 503' FWL

COUNTY: Uintah

QTR/QTR, SECTION, TOWNSHIP, RANGE, MERIDIAN: SWNW 2 7S 23E

STATE: UTAH

11. CHECK APPROPRIATE BOXES TO INDICATE NATURE OF NOTICE, REPORT, OR OTHER DATA

TYPE OF SUBMISSION	TYPE OF ACTION		
☑ NOTICE OF INTENT (Submit in Duplicate)	☑ ACIDIZE	☐ DEEPEN	☐ REPERFORATE CURRENT FORMATION
Approximate date work will start:	☐ ALTER CASING	☐ FRACTURE TREAT	☐ SIDETRACK TO REPAIR WELL
	☑ CASING REPAIR	☐ NEW CONSTRUCTION	☐ TEMPORARILY ABANDON
	☐ CHANGE TO PREVIOUS PLANS	☐ OPERATOR CHANGE	☐ TUBING REPAIR
	☐ CHANGE TUBING	☐ PLUG AND ABANDON	☐ VENT OR FLARE
☐ SUBSEQUENT REPORT (Submit Original Form Only)	☐ CHANGE WELL NAME	☑ PLUG BACK	☐ WATER DISPOSAL
Date of work completion:	☐ CHANGE WELL STATUS	☑ PRODUCTION (START/RESUME)	☐ WATER SHUT-OFF
	☐ COMMINGLE PRODUCING FORMATIONS	☐ RECLAMATION OF WELL SITE	☐ OTHER: _____
	☐ CONVERT WELL TYPE	☐ RECOMPLETE - DIFFERENT FORMATION	

12. DESCRIBE PROPOSED OR COMPLETED OPERATIONS. Clearly show all pertinent details including dates, depths, volumes, etc.

Citation requests approval to repair potential hole in casing, plug back, acidize and return this well to production per the attached well bore schematics and procedure.

COPY SENT TO OPERATOR
Date: 4-10-2012
Initials: KS

NAME (PLEASE PRINT) Mary Torres

TITLE Permitting Analyst

SIGNATURE Mary Torres

DATE 3/19/2012

(This space for State use only)

APPROVED BY THE STATE OF UTAH DIVISION OF OIL, GAS, AND MINING
DATE: 4/2/2012
BY: [signature]

(See Instructions on Reverse Side)

RECEIVED
MAR 20 2012
DIV. OF OIL, GAS & MINING

(5/2000)

INSTRUCTIONS

This form shall be submitted by the operator to show the intention and/or completion of the following:

- miscellaneous work projects and actions for which other specific report forms do not exist;
- all other work and events as identified in section 11, Type of Action, or as required by the Utah Oil and Gas Conservation General Rules, including:
  - minor deepening of an existing well bore,
  - plugging back a well,
  - recompleting to a different producing formation within an existing well bore (intent only),
  - reperforating the current producing formation,
  - drilling a sidetrack to repair a well,
  - reporting monthly the status of each drilling well.

This form is not to be used for <u>proposals</u> to

- drill new wells,
- reenter previously plugged and abandoned wells,
- significantly deepen existing wells below their current bottom-hole depth,
- drill horizontal laterals from an existing well bore,
- drill hydrocarbon exploratory holes such as core samples and stratigraphic tests.

Use Form 3, Application for Permit to Drill (APD) for such proposals.

NOTICE OF INTENT - A notice of intention to do work on a well or to change plans previously approved shall be submitted in duplicate and must be received and approved by the division before the work is commenced. The operator is responsible for receipt of the notice by the division in ample time for proper consideration and action. In cases of emergency, the operator may obtain verbal approval to commence work. Within five days after receiving verbal approval, the operator shall submit a Sundry Notice describing the work and acknowledging the verbal approval.

SUBSEQUENT REPORT - A subsequent report shall be submitted to the division within 30 days of the completion of the outlined work. Specific details of the work performed should be provided, including dates, well depths, placement of plugs, etc.

WELL ABANDONMENT - Proposals to abandon a well and subsequent reports of abandonment should include reasons for the abandonment; data on any former or present productive zones, or other zones with present significant fluid contents not sealed off by cement or otherwise; depths (top and bottom) and method of placement of cement plugs; mud or other material placed below, between and above plugs; amount, size, and method of parting of any casing, liner, or tubing pulled and the depth to top of any left in the hole; method of closing top of well; and date well site conditioned for final inspection looking to approval of the abandonment.

In addition to any Sundry Notice forms submitted, **Form 8, Well Completion or Recompletion Report and Log** must be submitted to the division to report the <u>results</u> of the following operations:

- completing or plugging a new well,
- reentering a previously plugged and abandoned well,
- significantly deepening an existing well bore below the current bottom-hole depth,
- drilling horizontal laterals from an existing well bore,
- drilling hydrocarbon exploratory holes such as core samples and stratigraphic tests,
- recompleting to a different producing formation.

Send to:

Utah Division of Oil, Gas and Mining
1594 West North Temple, Suite 1210
Box 145801
Salt Lake City, Utah 84114-5801

Phone: 801-538-5340

Fax: 801-359-3940

Citation OIL & GAS CORP.

PROJECT: WHU # 72 – Return to production (Plug back DL1a perfs)

DRILLED & COMPLETED: 10/82 LAST WO: 6/05 Change out pump

LOCATION: 3227' FSL, 503' FWL, SW NW Sec 2, T7S, R3E

FIELD: Walker Hollow Field COUNTY: Uintah STATE: UT

TD: 5790' KB PBTD: 5730' KB DATUM: 5339' GL KB to GL: 15'

CASING AND LINER RECORD

SIZE	WT / GRADE	DEPTH	CEMENT	HOLE SIZE	TOC	REMARKS
9 5/8"	36#/K-55	420'	220 sxs	12 ¼"	Surf	Circ to surf.
7"	23/20# K-55 *23# 1501.84'* *20# 4263.74'*	5781'	1275 sxs	8 ¾"	1560' (CBL 9/82)	750 sx Lead 525 sx Tail 1275 sx Total

PRESENT FORMATION AND COMPLETION: (4902 – 4922') 5a (5508 – 5516') 8c
(4964 – 4970') 5a2 (5518 – 5528') 8c
(4980 – 5000') 5b (5530 – 5538') 8c
(5008 – 5016') 5c (5600 – 5624') La

TUBING: (182) jts 2 7/8" 6.5# EUE 8rd tbg, SN, 7" TAC, (1) jt 2 7/8" tbg w/ plug notched collar.

MISC.: Prior excess water production believed to be from DL1a perfs.

PROCEDURE

- **Move in and set (1) 500 bbl Frac Tank and fill with produced water.**
- **Hot-oil well before pulling rods.**

1. MI RU Pulling Unit.

2. NUBOP. Rlse/shear TAC and POOH w/ 2 7/8" 6.5# J-55 prod tubing.

3. If necessary, RU WL Truck and RIH w/ Chem Cutter. Cut tbg above TAC. RD WL Truck. POOH w/ tbg and RIH w/ cut-rite shoe w/ overshot and tbg grapple to mill over TAC. Fish TAC and bttm tbg joints. LD fishing tools.

4. RIH w 6 1/8" bit and scrapper on 2 7/8" prod tbg to PBTD @ 5730' FS. Hydrotest tubing to 5000 psi (68% of new) while RIH w/ tubing. POOH w/ B&S.

5. PU & RIH w/ 7" 23# PKR and set @ ±4800' FS. Load BS and pressure test casing to 500 psi.

6. If necessary, repair casing leak. Set RBP below and CICR above HIC. Cement squeeze per recommendation. PUH 2 jts from cement retainer and reverse circulate clean. WOC.

7. POH w/ 2-7/8" tubing WS and LD CICR stinger.

8. PU RIH w/ CIBP and plug back DL1a perfs f(5600 – 5624'). Set CIBP ±5580' FS (42' below bttm 8c perf). POOH w/ 2-7/8" tubing.

9. RIH w/ 7" PKR on 2-7/8" tbg. Set PKR @ ±4800' FS. Load backside full.

10. MI NU Acid Co. Pressure test pumps and lines to 1,000 psi. **Acid stimulate Green River perfs f(4449 – 5440') down 2-7/8" tbg as per the recommendation.** Record ISIP and 5, 10, 15 min SIP's. Set Max Pressure at 5,000 psi. Leave well SI overnight.

11. Rlse PKR. POOH & LD 7" PKR.

12. RIH w/ 2-7/8" 6.5# J-55 EUE 8rd tbg BHA as follows:

TUBING

Qty	Description	Footage	Depth
	KB	15'	15'
~175	2 7/8" 6.5# J-55 EUE 8rd Tubing	5455'	5470'
	7" x 2 7/8" TAC	3'	5473'
2	2 7/8" 6.5# J-55 EUE 8rd Tubing	62'	5535'
	2 7/8" SN	1'	5536'
1	2 7/8" 6.5# J-55 EUE 8rd Tbg w/ notched collar	32'	5568'

Note: Depths are subject to change.

13. ND BOP. Set tubing on slips.

14. RIH w/ rods as follows:

RODS

Qty	Description	Footage
	KB	15'
TBD	Rod subs	TBD
63	1" D Rods	1575'
75	7/8" D Rods	1875'
75	3/4" D Rods	1875'
8	1" D rods	200'
1	1 ¾" Plunger pump	

15. NU WH. RD MO PU.

16. Connect flowline and trace lines to main lines.

17. Start well on. Monitor and well test total fluid and oil cut.

CITATION OIL & GAS CORP.
WALKER HOLLOW UNIT #72
3227' FSL, 503' FWL, (SW NW) Section 2 - T7S - R3E
UINTAH CO., UTAH
Current Status: Active Producer

Lufkin M456D-305-144
Ajax DP60

API No: 43-047-31227

Elevation: 5339' GL
KB = 15' AGL

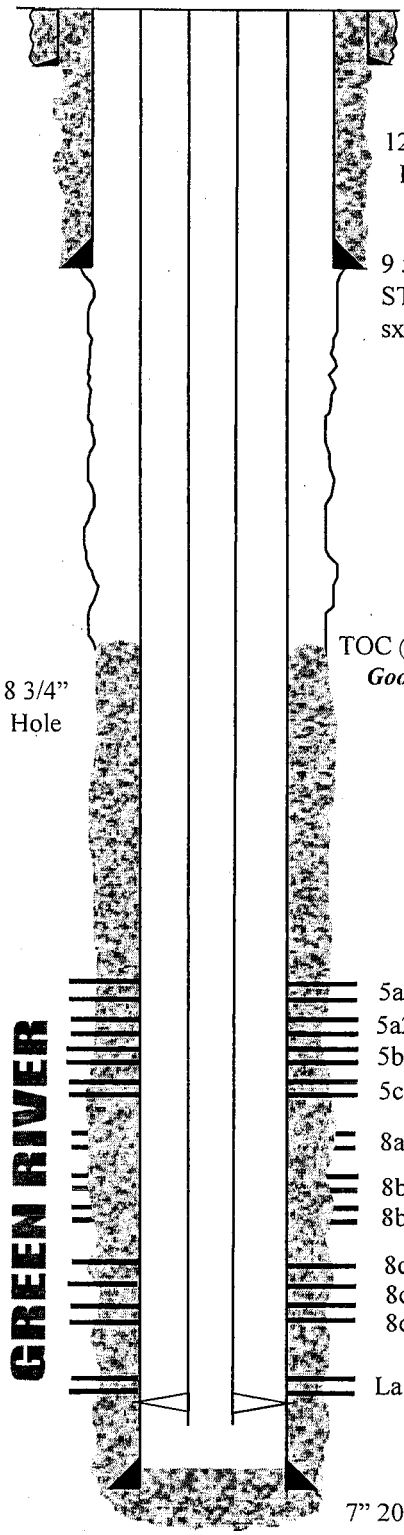

20" conductor @ 40'

12-1/4" Hole

9 5/8" 36# K-55 ST&C @ 420' w/ 220 sx – Circ'd to surface

TOC @ 1560' (CBL 9/9/82)
Good Bond starts ~3140'

8 3/4" Hole

5a: 4902' – 4922' w/ 4 spf (Acidize 10/82)
5a2: 4964' – 4970' w/ 4 spf (Acidize 10/82)
5b: 4980' – 5000' w/ 4 spf (Acidize 10/82)
5c: 5008' – 5016' w/ 4 spf (Acidize 10/82)

8a: 5406' – 5418' w/ 2 spf (Acidize & Cmt Sqz'd 10/82)

8b: 5474' – 5484' w/ 2 spf (Acidized & Cmt Sqz'd 10/82)
8b: 5488' – 5498' w/ 2 spf (Acidized & Cmt Sqz'd 10/82)

8c: 5508' – 5516' w/ 2 spf (Acidize & Frac 10/82)
8c: 5518' – 5528' w/ 2 spf (Acidize & Frac 10/82)
8c: 5530' – 5538' w/ 2 spf (Acidize & Frac 10/82)

La: 5600' – 5624' w/ 2 spf (Acidize & Frac 10/82)

7" 20# & 23# K-55 ST&C @ 5781' w/ 1275 sx

PBTD = 5730'
TD = 5790'

Completion Assembly (4/23/03)

Qty	Description	Length	Depth
	KB correction	13.00'	13.00'
182 jts	2 7/8" 6.5# J-55 8rd EUE tbg	5640.62'	5653.62'
1	2 7/8" SN	1.10'	5654.72'
1	2 7/8" x 7" TAC @ 5655' KB	2.37'	5657.09'
1jt	2 7/8" 6.5# J-55 8rd EUE tbg	31.75'	5688.84'
1	2 7/8" Notched Collar	0.45'	5689.29'

Rod/Pump DETAIL (6/20/05)

Qty	Size	Length	Depth
	PR & Liner		
4	2', 4', 6', 6' x 1"	18.00'	18.00'
63	1" Grade D SR	1575.00'	1593.00'
75	7/8" Grade D SR	1875.00'	3468.00'
75	3/4" Grade D SR	1875.00'	5343.00'
11	1" Grade D SR	275.00'	5618.00'
Pump: 2 1/2" x 13/4" x 20' x 22 1/2' RHAC, EX-71			

Updated: 2/1/12 - AL

CITATION OIL & GAS CORP.
WALKER HOLLOW UNIT #72
3227' FSL, 503' FWL, (SW NW) Section 2 - T7S - R3E
UINTAH CO., UTAH
Current Status: Active Producer

Lufkin M456D-305-144
Ajax DP60

API No: 43-047-31227

Elevation: 5339' GL
KB = 15' AGL

PROPOSED

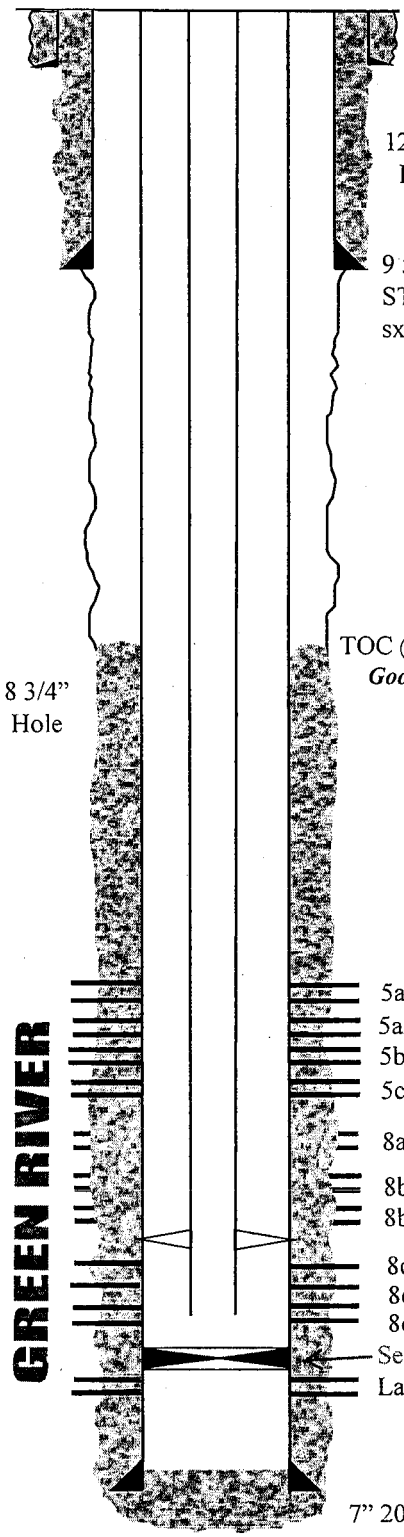

20" conductor @ 40'

12-1/4" Hole

9 5/8" 36# K-55 ST&C @ 420' w/ 220 sx – Circ'd to surface

TOC @ 1560' (CBL 9/9/82)
Good Bond starts ~3140'

8 3/4" Hole

5a: 4902' – 4922' w/ 4 spf (Acidize 10/82)
5a2: 4964' – 4970' w/ 4 spf (Acidize 10/82)
5b: 4980' – 5000' w/ 4 spf (Acidize 10/82)
5c: 5008' – 5016' w/ 4 spf (Acidize 10/82)

8a: 5406' – 5418' w/ 2 spf (Acidize & Cmt Sqz'd 10/82)

8b: 5474' – 5484' w/ 2 spf (Acidized & Cmt Sqz'd 10/82)
8b: 5488' – 5498' w/ 2 spf (Acidized & Cmt Sqz'd 10/82)

8c: 5508' – 5516' w/ 2 spf (Acidize & Frac 10/82)
8c: 5518' – 5528' w/ 2 spf (Acidize & Frac 10/82)
8c: 5530' – 5538' w/ 2 spf (Acidize & Frac 10/82)

Set CIBP @ 5580'

La: 5600' – 5624' w/ 2 spf (Acidize & Frac 10/82)

7" 20# & 23# K-55 ST&C @ 5781' w/ 1275 sx

PBTD = 5730'
TD = 5790'

Completion Assembly			
Qty	Description	Length	Depth
	KB correction	13.00'	13.00'
175	2 7/8" 6.5# J-55 8rd EUE tbg	5454.75'	5467.75'
1	2 7/8" x 7" TAC	3.00'	5470.75'
2	2 7/8" 6.5# J-55 8rd EUE tbg	62.00'	5532.75'
1	2 7/8" SN	1.10'	5533.85'
1	2 7/8" 6.5# J-55 tbg w/ notch collar	32.00'	5565.85'

Rod/Pump DETAIL			
Qty	Size	Length	Depth
	PR & Liner		
4	2', 4', 6', 6' x 1"	18.00'	18.00'
63	1" Grade D SR	1575.00'	1593.00'
75	7/8" Grade D SR	1875.00'	3468.00'
75	3/4" Grade D SR	1875.00'	5343.00'
8	1" Grade D SR	200.00'	5543.00'
Pump: 2 1/2" x 13/4" x 20' x 22 1/2' RHAC, EX-71			

Updated: 2/1/12 - AL

FORM 9

STATE OF UTAH
DEPARTMENT OF NATURAL RESOURCES
DIVISION OF OIL, GAS AND MINING

5. LEASE DESIGNATION AND SERIAL NUMBER: ML 3175

SUNDRY NOTICES AND REPORTS ON WELLS

6. IF INDIAN, ALLOTTEE OR TRIBE NAME:

Do not use this form for proposals to drill new wells, significantly deepen existing wells below current bottom-hole depth, reenter plugged wells, or to drill horizontal laterals. Use APPLICATION FOR PERMIT TO DRILL form for such proposals.

7. UNIT or CA AGREEMENT NAME: Walker Hollow Unit UTU66837A

1. TYPE OF WELL: OIL WELL ☑ GAS WELL ☐ OTHER _____

8. WELL NAME and NUMBER: Walker Hollow Unit # 72

2. NAME OF OPERATOR: Citation Oil & Gas Corp.

9. API NUMBER: 4304731227

3. ADDRESS OF OPERATOR: P O Box 690688 CITY Houston STATE TX ZIP 77269

PHONE NUMBER: (281) 891-1569

10. FIELD AND POOL, OR WILDCAT: Walker Hollow Green River

4. LOCATION OF WELL

FOOTAGES AT SURFACE: 3227' FSL & 503' FWL

COUNTY: Uintah

QTR/QTR, SECTION, TOWNSHIP, RANGE, MERIDIAN: SWNW 2 7S 23E

STATE: UTAH

11. CHECK APPROPRIATE BOXES TO INDICATE NATURE OF NOTICE, REPORT, OR OTHER DATA

TYPE OF SUBMISSION	TYPE OF ACTION		
☑ NOTICE OF INTENT (Submit in Duplicate)	☑ ACIDIZE	☐ DEEPEN	☐ REPERFORATE CURRENT FORMATION
Approximate date work will start:	☐ ALTER CASING	☐ FRACTURE TREAT	☐ SIDETRACK TO REPAIR WELL
	☑ CASING REPAIR	☐ NEW CONSTRUCTION	☐ TEMPORARILY ABANDON
	☐ CHANGE TO PREVIOUS PLANS	☐ OPERATOR CHANGE	☐ TUBING REPAIR
	☐ CHANGE TUBING	☐ PLUG AND ABANDON	☐ VENT OR FLARE
☐ SUBSEQUENT REPORT (Submit Original Form Only)	☐ CHANGE WELL NAME	☑ PLUG BACK	☐ WATER DISPOSAL
Date of work completion:	☐ CHANGE WELL STATUS	☑ PRODUCTION (START/RESUME)	☐ WATER SHUT-OFF
	☐ COMMINGLE PRODUCING FORMATIONS	☐ RECLAMATION OF WELL SITE	☐ OTHER: _____
	☐ CONVERT WELL TYPE	☐ RECOMPLETE - DIFFERENT FORMATION	

12. DESCRIBE PROPOSED OR COMPLETED OPERATIONS. Clearly show all pertinent details including dates, depths, volumes, etc.

Citation requests approval to repair potential hole in casing, plug back, acidize and return this well to production per the attached well bore schematics and procedure.

COPY SENT TO OPERATOR
Date: 4-10-2012
Initials: KS

NAME (PLEASE PRINT) Mary Torres

TITLE Permitting Analyst

SIGNATURE Mary Torres

DATE 3/19/2012

(This space for State use only)

APPROVED BY THE STATE OF UTAH DIVISION OF OIL, GAS, AND MINING
DATE: 4/2/2012
BY: [signature]

(See Instructions on Reverse Side)

RECEIVED
MAR 20 2012
DIV. OF OIL, GAS & MINING

(5/2000)

INSTRUCTIONS

This form shall be submitted by the operator to show the intention and/or completion of the following:

- miscellaneous work projects and actions for which other specific report forms do not exist;
- all other work and events as identified in section 11, Type of Action, or as required by the Utah Oil and Gas Conservation General Rules, including:
  - minor deepening of an existing well bore,
  - plugging back a well,
  - recompleting to a different producing formation within an existing well bore (intent only),
  - reperforating the current producing formation,
  - drilling a sidetrack to repair a well,
  - reporting monthly the status of each drilling well.

This form is not to be used for <u>proposals</u> to

- drill new wells,
- reenter previously plugged and abandoned wells,
- significantly deepen existing wells below their current bottom-hole depth,
- drill horizontal laterals from an existing well bore,
- drill hydrocarbon exploratory holes such as core samples and stratigraphic tests.

Use Form 3, Application for Permit to Drill (APD) for such proposals.

NOTICE OF INTENT - A notice of intention to do work on a well or to change plans previously approved shall be submitted in duplicate and must be received and approved by the division before the work is commenced. The operator is responsible for receipt of the notice by the division in ample time for proper consideration and action. In cases of emergency, the operator may obtain verbal approval to commence work. Within five days after receiving verbal approval, the operator shall submit a Sundry Notice describing the work and acknowledging the verbal approval.

SUBSEQUENT REPORT - A subsequent report shall be submitted to the division within 30 days of the completion of the outlined work. Specific details of the work performed should be provided, including dates, well depths, placement of plugs, etc.

WELL ABANDONMENT - Proposals to abandon a well and subsequent reports of abandonment should include reasons for the abandonment; data on any former or present productive zones, or other zones with present significant fluid contents not sealed off by cement or otherwise; depths (top and bottom) and method of placement of cement plugs; mud or other material placed below, between and above plugs; amount, size, and method of parting of any casing, liner, or tubing pulled and the depth to top of any left in the hole; method of closing top of well; and date well site conditioned for final inspection looking to approval of the abandonment.

In addition to any Sundry Notice forms submitted, **Form 8, Well Completion or Recompletion Report and Log** must be submitted to the division to report the <u>results</u> of the following operations:

- completing or plugging a new well,
- reentering a previously plugged and abandoned well,
- significantly deepening an existing well bore below the current bottom-hole depth,
- drilling horizontal laterals from an existing well bore,
- drilling hydrocarbon exploratory holes such as core samples and stratigraphic tests,
- recompleting to a different producing formation.

Send to:

Utah Division of Oil, Gas and Mining
1594 West North Temple, Suite 1210
Box 145801
Salt Lake City, Utah 84114-5801

Phone: 801-538-5340

Fax: 801-359-3940

Citation OIL & GAS CORP.

PROJECT: WHU # 72 – Return to production (Plug back DL1a perfs)

DRILLED & COMPLETED: 10/82 LAST WO: 6/05 Change out pump

LOCATION: 3227' FSL, 503' FWL, SW NW Sec 2, T7S, R3E

FIELD: Walker Hollow Field COUNTY: Uintah STATE: UT

TD: 5790' KB PBTD: 5730' KB DATUM: 5339' GL KB to GL: 15'

CASING AND LINER RECORD

SIZE	WT / GRADE	DEPTH	CEMENT	HOLE SIZE	TOC	REMARKS
9 5/8"	36#/K-55	420'	220 sxs	12 ¼"	Surf	Circ to surf.
7"	23/20# K-55 *23# 1501.84'* *20# 4263.74'*	5781'	1275 sxs	8 ¾"	1560' (CBL 9/82)	750 sx Lead 525 sx Tail 1275 sx Total

PRESENT FORMATION AND COMPLETION: (4902 – 4922') 5a (5508 – 5516') 8c
(4964 – 4970') 5a2 (5518 – 5528') 8c
(4980 – 5000') 5b (5530 – 5538') 8c
(5008 – 5016') 5c (5600 – 5624') La

TUBING: (182) jts 2 7/8" 6.5# EUE 8rd tbg, SN, 7" TAC, (1) jt 2 7/8" tbg w/ plug notched collar.

MISC.: Prior excess water production believed to be from DL1a perfs.

PROCEDURE

- **Move in and set (1) 500 bbl Frac Tank and fill with produced water.**
- **Hot-oil well before pulling rods.**

1. MI RU Pulling Unit.

2. NUBOP. Rlse/shear TAC and POOH w/ 2 7/8" 6.5# J-55 prod tubing.

3. If necessary, RU WL Truck and RIH w/ Chem Cutter. Cut tbg above TAC. RD WL Truck. POOH w/ tbg and RIH w/ cut-rite shoe w/ overshot and tbg grapple to mill over TAC. Fish TAC and bttm tbg joints. LD fishing tools.

4. RIH w 6 1/8" bit and scrapper on 2 7/8" prod tbg to PBTD @ 5730' FS. Hydrotest tubing to 5000 psi (68% of new) while RIH w/ tubing. POOH w/ B&S.

5. PU & RIH w/ 7" 23# PKR and set @ ±4800' FS. Load BS and pressure test casing to 500 psi.

6. If necessary, repair casing leak. Set RBP below and CICR above HIC. Cement squeeze per recommendation. PUH 2 jts from cement retainer and reverse circulate clean. WOC.

7. POH w/ 2-7/8" tubing WS and LD CICR stinger.

8. PU RIH w/ CIBP and plug back DL1a perfs f(5600 – 5624'). Set CIBP ±5580' FS (42' below bttm 8c perf). POOH w/ 2-7/8" tubing.

9. RIH w/ 7" PKR on 2-7/8" tbg. Set PKR @ ±4800' FS. Load backside full.

10. MI NU Acid Co. Pressure test pumps and lines to 1,000 psi. **Acid stimulate Green River perfs f(4449 – 5440') down 2-7/8" tbg as per the recommendation.** Record ISIP and 5, 10, 15 min SIP's. Set Max Pressure at 5,000 psi. Leave well SI overnight.

11. Rlse PKR. POOH & LD 7" PKR.

12. RIH w/ 2-7/8" 6.5# J-55 EUE 8rd tbg BHA as follows:

TUBING

Qty	Description	Footage	Depth
	KB	15'	15'
~175	2 7/8" 6.5# J-55 EUE 8rd Tubing	5455'	5470'
	7" x 2 7/8" TAC	3'	5473'
2	2 7/8" 6.5# J-55 EUE 8rd Tubing	62'	5535'
	2 7/8" SN	1'	5536'
1	2 7/8" 6.5# J-55 EUE 8rd Tbg w/ notched collar	32'	5568'

Note: Depths are subject to change.

13. ND BOP. Set tubing on slips.

14. RIH w/ rods as follows:

RODS

Qty	Description	Footage
	KB	15'
TBD	Rod subs	TBD
63	1" D Rods	1575'
75	7/8" D Rods	1875'
75	3/4" D Rods	1875'
8	1" D rods	200'
1	1 ¾" Plunger pump	

15. NU WH. RD MO PU.

16. Connect flowline and trace lines to main lines.

17. Start well on. Monitor and well test total fluid and oil cut.

CITATION OIL & GAS CORP.
WALKER HOLLOW UNIT #72
3227' FSL, 503' FWL, (SW NW) Section 2 - T7S - R3E
UINTAH CO., UTAH
Current Status: Active Producer

Lufkin M456D-305-144
Ajax DP60

API No: 43-047-31227

Elevation: 5339' GL
KB = 15' AGL

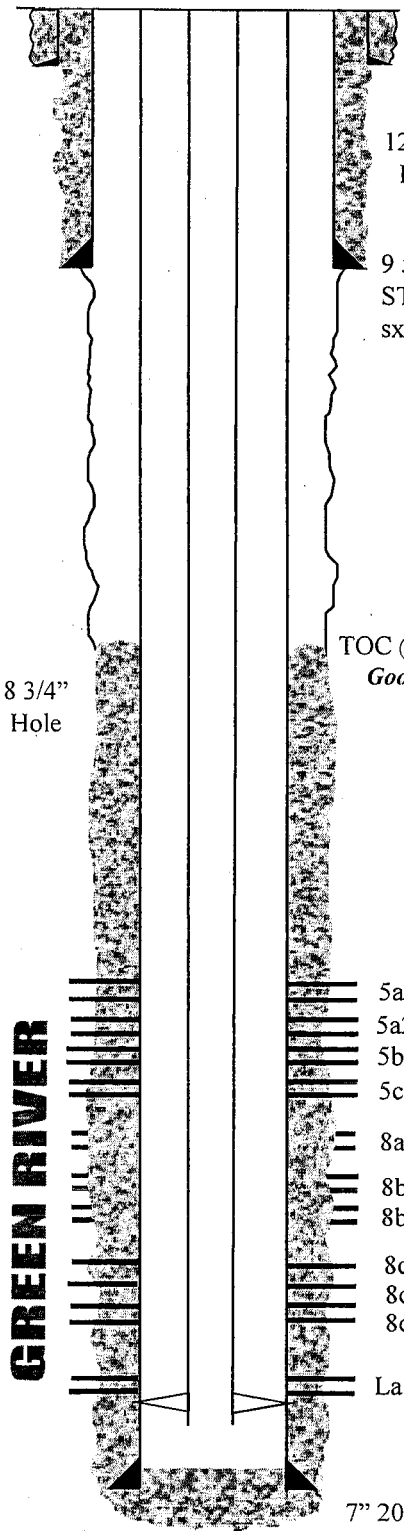

20" conductor @ 40'

12-1/4" Hole

9 5/8" 36# K-55 ST&C @ 420' w/ 220 sx – Circ'd to surface

TOC @ 1560' (CBL 9/9/82)
Good Bond starts ~3140'

8 3/4" Hole

5a: 4902' – 4922' w/ 4 spf (Acidize 10/82)
5a2: 4964' – 4970' w/ 4 spf (Acidize 10/82)
5b: 4980' – 5000' w/ 4 spf (Acidize 10/82)
5c: 5008' – 5016' w/ 4 spf (Acidize 10/82)

8a: 5406' – 5418' w/ 2 spf (Acidize & Cmt Sqz'd 10/82)

8b: 5474' – 5484' w/ 2 spf (Acidized & Cmt Sqz'd 10/82)
8b: 5488' – 5498' w/ 2 spf (Acidized & Cmt Sqz'd 10/82)

8c: 5508' – 5516' w/ 2 spf (Acidize & Frac 10/82)
8c: 5518' – 5528' w/ 2 spf (Acidize & Frac 10/82)
8c: 5530' – 5538' w/ 2 spf (Acidize & Frac 10/82)

La: 5600' – 5624' w/ 2 spf (Acidize & Frac 10/82)

7" 20# & 23# K-55 ST&C @ 5781' w/ 1275 sx

PBTD = 5730'
TD = 5790'

Completion Assembly (4/23/03)

Qty	Description	Length	Depth
	KB correction	13.00'	13.00'
182 jts	2 7/8" 6.5# J-55 8rd EUE tbg	5640.62'	5653.62'
1	2 7/8" SN	1.10'	5654.72'
1	2 7/8" x 7" TAC @ 5655' KB	2.37'	5657.09'
1jt	2 7/8" 6.5# J-55 8rd EUE tbg	31.75'	5688.84'
1	2 7/8" Notched Collar	0.45'	5689.29'

Rod/Pump DETAIL (6/20/05)

Qty	Size	Length	Depth
	PR & Liner		
4	2', 4', 6', 6' x 1"	18.00'	18.00'
63	1" Grade D SR	1575.00'	1593.00'
75	7/8" Grade D SR	1875.00'	3468.00'
75	3/4" Grade D SR	1875.00'	5343.00'
11	1" Grade D SR	275.00'	5618.00'
Pump: 2 1/2" x 13/4" x 20' x 22 1/2' RHAC, EX-71			

Updated: 2/1/12 - AL

CITATION OIL & GAS CORP.
WALKER HOLLOW UNIT #72
3227' FSL, 503' FWL, (SW NW) Section 2 - T7S - R3E
UINTAH CO., UTAH
Current Status: Active Producer

Lufkin M456D-305-144
Ajax DP60

API No: 43-047-31227

Elevation: 5339' GL
KB = 15' AGL

PROPOSED

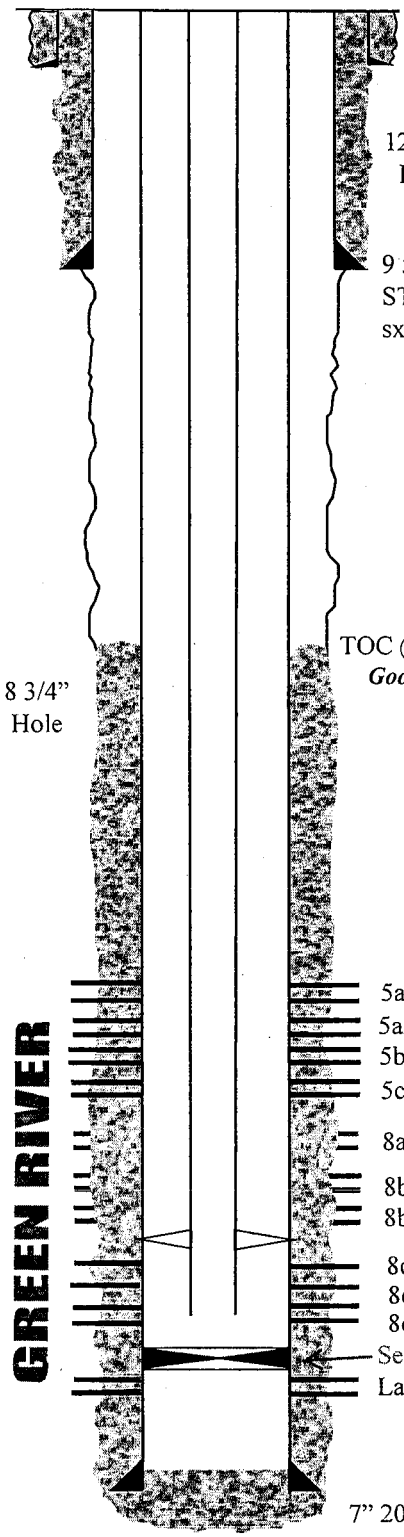

20" conductor @ 40'

12-1/4" Hole

9 5/8" 36# K-55 ST&C @ 420' w/ 220 sx – Circ'd to surface

TOC @ 1560' (CBL 9/9/82)
Good Bond starts ~3140'

8 3/4" Hole

5a: 4902' – 4922' w/ 4 spf (Acidize 10/82)
5a2: 4964' – 4970' w/ 4 spf (Acidize 10/82)
5b: 4980' – 5000' w/ 4 spf (Acidize 10/82)
5c: 5008' – 5016' w/ 4 spf (Acidize 10/82)

8a: 5406' – 5418' w/ 2 spf (Acidize & Cmt Sqz'd 10/82)

8b: 5474' – 5484' w/ 2 spf (Acidized & Cmt Sqz'd 10/82)
8b: 5488' – 5498' w/ 2 spf (Acidized & Cmt Sqz'd 10/82)

8c: 5508' – 5516' w/ 2 spf (Acidize & Frac 10/82)
8c: 5518' – 5528' w/ 2 spf (Acidize & Frac 10/82)
8c: 5530' – 5538' w/ 2 spf (Acidize & Frac 10/82)

Set CIBP @ 5580'

La: 5600' – 5624' w/ 2 spf (Acidize & Frac 10/82)

7" 20# & 23# K-55 ST&C @ 5781' w/ 1275 sx

PBTD = 5730'
TD = 5790'

Completion Assembly			
Qty	Description	Length	Depth
	KB correction	13.00'	13.00'
175	2 7/8" 6.5# J-55 8rd EUE tbg	5454.75'	5467.75'
1	2 7/8" x 7" TAC	3.00'	5470.75'
2	2 7/8" 6.5# J-55 8rd EUE tbg	62.00'	5532.75'
1	2 7/8" SN	1.10'	5533.85'
1	2 7/8" 6.5# J-55 tbg w/ notch collar	32.00'	5565.85'

Rod/Pump DETAIL			
Qty	Size	Length	Depth
	PR & Liner		
4	2', 4', 6', 6' x 1"	18.00'	18.00'
63	1" Grade D SR	1575.00'	1593.00'
75	7/8" Grade D SR	1875.00'	3468.00'
75	3/4" Grade D SR	1875.00'	5343.00'
8	1" Grade D SR	200.00'	5543.00'
Pump: 2 1/2" x 13/4" x 20' x 22 1/2' RHAC, EX-71			

Updated: 2/1/12 - AL

STATE OF UTAH
DEPARTMENT OF NATURAL RESOURCES
DIVISION OF OIL, GAS AND MINING

FORM 9

SUNDRY NOTICES AND REPORTS ON WELLS

Do not use this form for proposals to drill new wells, significantly deepen existing wells below current bottom-hole depth, reenter plugged wells, or to drill horizontal laterals. Use APPLICATION FOR PERMIT TO DRILL form for such proposals.

5. LEASE DESIGNATION AND SERIAL NUMBER: ML 3175
6. IF INDIAN, ALLOTTEE OR TRIBE NAME:
7. UNIT or CA AGREEMENT NAME: Walker Hollow Unit UTU66837A
8. WELL NAME and NUMBER: Walker Hollow Unit 72
9. API NUMBER: 43-047-312 27
10. FIELD AND POOL, OR WILDCAT: Uintah County, Utah

1. TYPE OF WELL: OIL WELL ☑ GAS WELL ☐ OTHER
2. NAME OF OPERATOR: Citation Oil & Gas Corp.
3. ADDRESS OF OPERATOR: P O Box 690688 CITY Houston STATE TX ZIP 77269 PHONE NUMBER: (281) 891-1000
4. LOCATION OF WELL
FOOTAGES AT SURFACE: 3227' FSL & 503' FWL COUNTY:
QTR/QTR, SECTION, TOWNSHIP, RANGE, MERIDIAN: SWNW 2 7S 23E STATE: UTAH

11. CHECK APPROPRIATE BOXES TO INDICATE NATURE OF NOTICE, REPORT, OR OTHER DATA

TYPE OF SUBMISSION	TYPE OF ACTION		
☐ NOTICE OF INTENT (Submit in Duplicate)	☐ ACIDIZE	☐ DEEPEN	☐ REPERFORATE CURRENT FORMATION
Approximate date work will start:	☐ ALTER CASING	☐ FRACTURE TREAT	☐ SIDETRACK TO REPAIR WELL
	☐ CASING REPAIR	☐ NEW CONSTRUCTION	☐ TEMPORARILY ABANDON
	☐ CHANGE TO PREVIOUS PLANS	☐ OPERATOR CHANGE	☐ TUBING REPAIR
	☐ CHANGE TUBING	☐ PLUG AND ABANDON	☐ VENT OR FLARE
☑ SUBSEQUENT REPORT (Submit Original Form Only)	☐ CHANGE WELL NAME	☐ PLUG BACK	☐ WATER DISPOSAL
Date of work completion:	☐ CHANGE WELL STATUS	☑ PRODUCTION (START/RESUME)	☐ WATER SHUT-OFF
	☐ COMMINGLE PRODUCING FORMATIONS	☐ RECLAMATION OF WELL SITE	☑ OTHER: Set RBP.
	☐ CONVERT WELL TYPE	☐ RECOMPLETE - DIFFERENT FORMATION	

12. DESCRIBE PROPOSED OR COMPLETED OPERATIONS. Clearly show all pertinent details including dates, depths, volumes, etc.

MIRU. SET REMOVEABLE BRIDGE PLUG @ 5097. SEATED PUMP AND PRESSURE TEST TO 1000PSI. PRESSURE HELD PUT UNIT TOGETHER AND HUNG ON. RETURNED TO PRODUCTION 5/3/2012.

NAME (PLEASE PRINT) Samantha Alanis TITLE Production Admin
SIGNATURE Samantha Alanis DATE 6/6/2012

(This space for State use only)

RECEIVED
JUN 21 2012
DIV. OF OIL, GAS & MINING

(5/2000) (See Instructions on Reverse Side)

Mailed 6/7/12 to Office of Energy Development

CITATION OIL & GAS CORP.
WALKER HOLLOW UNIT #72
3227' FSL, 503' FWL, (SW NW) Section 2 - T7S - R3E
UINTAH CO., UTAH
Current Status: Active Producer

Lufkin M456D-305-144
Ajax DP60

Elevation: 5339' GL
KB = 15' AGL

API No: 43-047-31227

UPDATED (5/02)

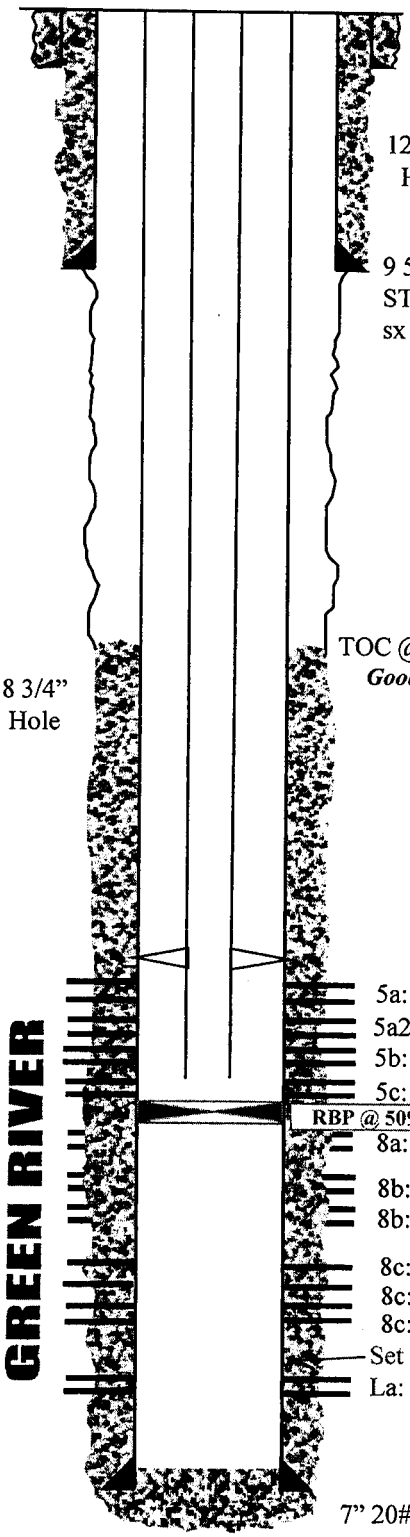

PBTD = 5730'
TD = 5790'

Completion Assembly			
Qty	Description	Length	Depth
	KB correction	13.00'	13.00'
157	2 7/8" 6.5# J-55 8rd EUE tbg	4893.69'	4906.69'
1	2 7/8" x 7" TAC	3.00'	4909.69'
2	2 7/8" 6.5# J-55 8rd EUE tbg	62.00'	4971.69'
1	2 7/8" SN	1.10'	4972.79'
1	2 7/8" 6.5# J-55 tbg w/ notch collar	32.00'	5004.79'

Rod/Pump DETAIL			
Qty	Size	Length	Depth
	PR & Liner		
4	2', 4', 6', 6' x 1"	18.00'	18.00'
63	1" Grade D SR	1575.00'	1593.00'
75	7/8" Grade D SR	1875.00'	3468.00'
75	3/4" Grade D SR	1875.00'	5343.00'
8	1" Grade D SR	200.00'	5543.00'
Pump: 2 1/2" x 13/4" x 20' x 22 1/2' RHAC, EX-71			

Updated: 2/1/12 - AL

GARY R. HERBERT
Governor

SPENCER J. COX
Lieutenant Governor

State of Utah

DEPARTMENT OF NATURAL RESOURCES

MICHAEL R. STYLER
Executive Director

Division of Oil, Gas and Mining

JOHN R. BAZA
Division Director

April 21, 2016

CERTIFIED MAIL NO.: 7015 0640 0003 5275 9864

43 047 31227
Walker Hollow 72
2 7S 23E

Ms. Bridget Lisenbe
Citation Oil & Gas Corp
PO Box 690688
Houston, TX 77269-0688

Subject: Extended Shut-in and Temporary Abandoned Well Requirements for Fee or State Leases

Dear Ms. Lisenbe:

As of January 2016, Citation Oil & Gas Corp has one (1) State Lease Well (see attachment A) that is currently in non-compliance with the requirements for extended shut-in or temporarily abandoned (SI/TA) status.

Wells SI/TA beyond twelve (12) consecutive months requires filing a Sundry Notice (R649-3-36-1). Wells with five (5) years non-activity or non-productivity shall be plugged, unless the Division grants approval for extended shut-in time upon a showing of good cause by the operator (649-3-36-1.3.3). For extended SI/TA consideration the operator shall provide the Utah Division of Oil, Gas & Mining with the following:

1. Reasons for SI/TA of the well (R649-3-36-1.1).

2. The length of time the well is expected to be SI/TA (R649-3-36-1.2), and

3. An explanation and supporting data if necessary, for showing the well has integrity, meaning that the casing, cement, equipment condition, static fluid level, pressure, existence or absence of Underground Sources of Drinking Water and other factors do not make the well a risk to public health and safety or the environment (R649-3-36-1.3).

Please note that the Divisions preferred method for showing well integrity is by MIT.

1594 West North Temple, Suite 1210, Salt Lake City, UT 84116
PO Box 145801, Salt Lake City, UT 84114-5801
telephone (801) 538-5340 • facsimile (801) 359-3940 • TTY (801) 538-7458 • *www.ogm.utah.gov*

UTAH DNR
OIL, GAS & MINING

Submitting the information suggested below may help show well integrity and may help qualify your well for extended SI/TA. **Note: As of July 1, 2003, wells in violation of the SI/TA rule R649-3-36 may be subject to full cost bonding (R649-3-1-4.2, 4.3).**

1. Wellbore diagram, and
2. Copy of recent casing pressure test, and
3. Current pressures on the wellbore (tubing pressure, casing pressure, and casing/casing annuli pressure) showing wellbore has integrity, and
4. Fluid level in the wellbore, and
5. An explanation of how the submitted information proves integrity.

All Submittals should be sent via ePermit

If the required information is not received within 30 days of the date of this notice, further actions may be initiated. If you have any questions concerning this matter, please contact me at (801) 538-5281.

Sincerely,

Dustin K. Doucet
Petroleum Engineer

DKD/DD/js

cc: Compliance File
Well File
LaVonne Garrison, SITLA

N:\O&G Reviewed Docs\ChronFile\PetroleumEngineer\SITA

ATTACHMENT A

	Well Name	API	LEASE	Years Inactive
1	Walker Hollow 72	43-047-31227	ML-3175	1 year(s) 7 month(s)

STATE OF UTAH
DEPARTMENT OF NATURAL RESOURCES
DIVISION OF OIL, GAS, AND MINING

FORM 9

5.LEASE DESIGNATION AND SERIAL NUMBER: ML-3175

SUNDRY NOTICES AND REPORTS ON WELLS

Do not use this form for proposals to drill new wells, significantly deepen existing wells below current bottom-hole depth, reenter plugged wells, or to drill horizontal laterals. Use APPLICATION FOR PERMIT TO DRILL form for such proposals.

6. IF INDIAN, ALLOTTEE OR TRIBE NAME:

7.UNIT or CA AGREEMENT NAME: WALKER HOLLOW (GR)

1. TYPE OF WELL Oil Well

8. WELL NAME and NUMBER: WALKER HOLLOW 72

2. NAME OF OPERATOR: CITATION OIL & GAS CORP

9. API NUMBER: 43047312270000

3. ADDRESS OF OPERATOR: 14077 Cutten Rd , Houston, TX, 77069

PHONE NUMBER: 281 891-1550 Ext

9. FIELD and POOL or WILDCAT: WALKER HOLLOW

4. LOCATION OF WELL
FOOTAGES AT SURFACE: 3227 FSL 0503 FWL
QTR/QTR, SECTION, TOWNSHIP, RANGE, MERIDIAN: Qtr/Qtr: SWNW Section: 02 Township: 07.0S Range: 23.0E Meridian: S

COUNTY: UINTAH

STATE: UTAH

11. CHECK APPROPRIATE BOXES TO INDICATE NATURE OF NOTICE, REPORT, OR OTHER DATA

TYPE OF SUBMISSION	TYPE OF ACTION		
✓ NOTICE OF INTENT Approximate date work will start: 1/31/2017	☐ ACIDIZE	☐ ALTER CASING	☐ CASING REPAIR
	☐ CHANGE TO PREVIOUS PLANS	☐ CHANGE TUBING	☐ CHANGE WELL NAME
	☐ CHANGE WELL STATUS	☐ COMMINGLE PRODUCING FORMATIONS	☐ CONVERT WELL TYPE
☐ SUBSEQUENT REPORT Date of Work Completion:	☐ DEEPEN	☐ FRACTURE TREAT	☐ NEW CONSTRUCTION
	☐ OPERATOR CHANGE	☐ PLUG AND ABANDON	☐ PLUG BACK
	☐ PRODUCTION START OR RESUME	☐ RECLAMATION OF WELL SITE	☐ RECOMPLETE DIFFERENT FORMATION
☐ SPUD REPORT Date of Spud:	☐ REPERFORATE CURRENT FORMATION	☐ SIDETRACK TO REPAIR WELL	☐ TEMPORARY ABANDON
	☐ TUBING REPAIR	☐ VENT OR FLARE	☐ WATER DISPOSAL
☐ DRILLING REPORT Report Date:	☐ WATER SHUTOFF	✓ SI TA STATUS EXTENSION	☐ APD EXTENSION
	☐ WILDCAT WELL DETERMINATION	☐ OTHER	OTHER:

12. DESCRIBE PROPOSED OR COMPLETED OPERATIONS. Clearly show all pertinent details including dates, depths, volumes, etc.

Citation Oil & Gas Corp requests approval for an extension to retain this wellbore in a shut-in status pending a reactivation or conversion.

Approved by the Utah Division of Oil, Gas and Mining

Date: May 19, 2016

By: Dark K Quist

Please Review Attached Conditions of Approval

NAME (PLEASE PRINT)	PHONE NUMBER	TITLE
Sara Guthrie	281 891-1564	Regulatory Compliance Coordinator

SIGNATURE	DATE
N/A	5/17/2016

RECEIVED: May. 17, 2016

The Utah Division of Oil, Gas, and Mining

- State of Utah
- Department of Natural Resources

Electronic Permitting System - Sundry Notices

Sundry Conditions of Approval Well Number 43047312270000

Approval valid through March 1, 2017. Ongoing monitoring of pressures and fluid levels required. If there are any changes, contact the Division immediately.

RECEIVED: May. 19, 2016

WALKER HOLLOW UNIT 72 ***SHUT IN STATUS EXTENSION REQUEST ATTACHMENT***

REASON FOR REQUEST:

The subject well was shut in intermittently beginning on July 19, 2013 with brief periods of production until January of 2014 when the decision was made to shut the well in due to low oil prices, to study bypassed pay opportunities, and its potential to be converted to an injector. We originally received a permit from the EPA to turn this well into an injector but after further evaluation decided to wait due to equipment costs and oil prices. We instead decided to first focus on three alternate conversions, USA Pearl Broadhurst 20, Walker Hollow Unit 39 and 43, as they were primary candidates and could potentially better the success of a WHU 72 reactivation or conversion. The WHU #39 and PBU #20 did not meet our expectations, however the WHU #43 continues to inject, which gives us cause to convert the WHU #72. Additionally, reconfiguring our downhole rod and pump design over the last 2 years has dramatically reduced our downtime, leading to increased production in the field. That, in combination with analysis from new personnel, has brought a debate as to potential additional pay zones in the well.

LENGTH OF TIME FOR REQUEST:

We anticipate that a reactivation for this well either as a producer or injector can be as early as January 2017, pending a rise in oil prices.

INFORMATION SUPPORTING WELL INTEGRITY:

The well was last pressure tested in May of 2012 when a RBP was set at 5097'. On July 11, 2012 the RBP was removed and replaced with a CIBP @ 5097' with 2 sxs of cement on top (10'). At time of shut- in, the subject well was producing a combined total of 14bbls of fluid per day, as nearly all fluid producing perforations are below the CIBP. A wellbore schematic prepared in May of 2015 is attached showing open perforations at 4902' - 5016' & 5508' - 5624'. Cement bond log shows TOC estimated @1560', well above the top of the open perforations (a copy of the CBL is enclosed for your review). Given that the No. 72 is a candidate for reactivation or conversion, an extension of shut-in status approval will be needed until it is reactivated.

Currently the well has been assigned to new geologists; they are researching the wells history and are optimistic that a reactivation or conversion will be possible. However, should it prove to be unsuccessful we will then notify your office and submit a Notice of Intent to either officially Temporarily Abandon or Plug and Abandon the well.

5/9/2016 Tubing Pressure – 0 psi
5/9/2016 Casing Pressure – 0 psi
5/9/2016 Fluid Level – 1283' from surface, 4290' above pump

2/21/2016 Tubing Pressure – 0psi
2/21/2016 Casing Pressure – 0psi
2/21/2016 – Fluid Level – 1283' from surface, 4290' above pump

4/27/2015 Tubing Pressure – 0 psi
4/27/2015 Casing Pressure – 0psi
4/27/2015 Fluid Level- 1283' from surface, 4,290' above pump

RECEIVED: May. 17, 2016

9/27/2014 Tubing Pressure – 0psi
9/27/2014 Casing Pressure – 0psi
9/27/2014 Fluid Level – 1283’ from surface, 4290’ above pump

10/5/2013 Tubing Pressure – 0psig
10/5/2013 Casing Pressure – 0psig
10/5/2013 Fluid Level - 1283’ from surface, 4290’ above pump

7/19/2013 Tubing Pressure – 150psig
7/19/2013 Casing Pressure – 60psig
7/19/2013 Fluid Level - 2240’ from surface, 3333’ above pump

RECEIVED: May. 17, 2016

CITATION OIL & GAS CORP.
WALKER HOLLOW UNIT #72
3227' FSL, 503' FWL, (SW NW) Section 2 - T7S - R3E
UINTAH CO., UTAH
Current Status: SI producer

Lufkin M456D-305-144
Ajax DP60

API No: 43-047-31227

Elevation: 5339' GL
KB = 15' AGL

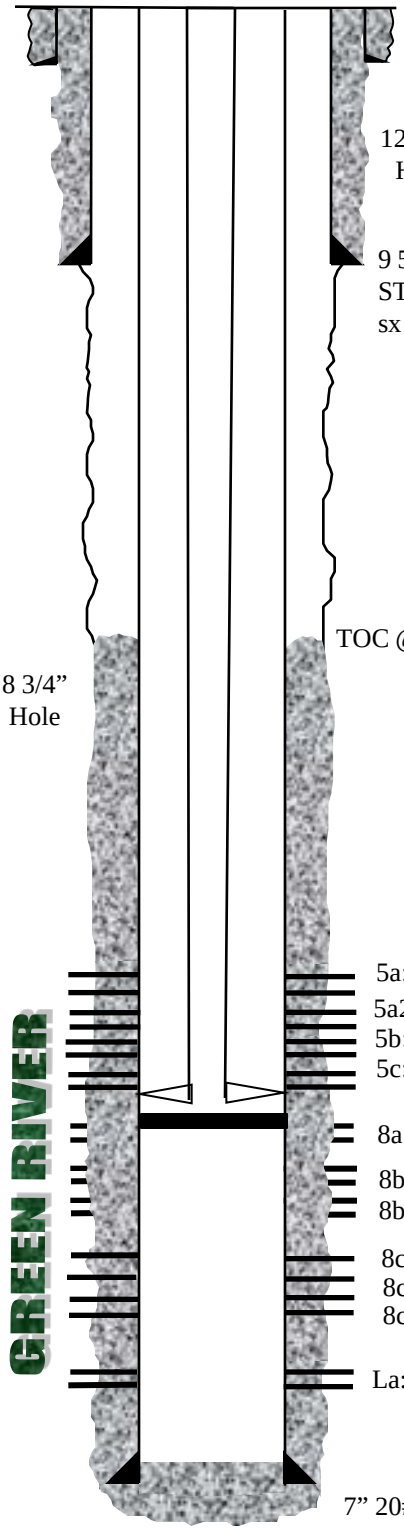

20" conductor @ 40'

12-1/4" Hole

9 5/8" 36# K-55 ST&C @ 420' w/ 220 sx – Circ'd to surface

TOC @ 1560' (CBL 9/9/82)

8 3/4" Hole

5a: 4902' – 4922' w/ 4 spf (Acidize 10/82)
5a2: 4964' – 4970' w/ 4 spf (Acidize 10/82)
5b: 4980' – 5000' w/ 4 spf (Acidize 10/82)
5c: 5008' – 5016' w/ 4 spf (Acidize 10/82)
CIBP installed at 5097' 7-11-12
8a: 5406' – 5418' w/ 2 spf (Acidize & Cmt Sqz'd 10/82)
8b: 5474' – 5484' w/ 2 spf (Acidized & Cmt Sqz'd 10/82)
8b: 5488' – 5498' w/ 2 spf (Acidized & Cmt Sqz'd 10/82)
8c: 5508' – 5516' w/ 2 spf (Acidize & Frac 10/82)
8c: 5518' – 5528' w/ 2 spf (Acidize & Frac 10/82)
8c: 5530' – 5538' w/ 2 spf (Acidize & Frac 10/82)
La: 5600' – 5624' w/ 2 spf (Acidize & Frac 10/82)

7" 20# & 23# K-55 ST&C @ 5781' w/ 1275 sx

PBTD = 5730'
TD = 5790'

Completion Assembly (4/23/03)

Qty	Description	Length	Depth
	KB correction	15.00	15.00
151	2 7/8" 6.5# J-55 8rd EUE tbg	4851.34	4866.34'
1	2 7/8" x 7" TAC	2.83'	4869.17
4	2 7/8" 6.5# J-55 8rd EUE tbg	128.73	4997.90'
1	SN	1.10'	4999.00'
1	2 7/8" 6.5# J-55 8rd EUE tbg	32.23'	5031.23
1	NC w/pin	0.43'	5031.66'

Qty	Size	Length	Depth
	polished rod	26	26.00'
4	2', 4', 6', 6' x 1"	20.00'	46.00'
80	7/8" Grade D SR	2000.00'	2046.00'
114	3/4" Grade D SR	2850.00'	4896.00'
4	1" kbar	100.00	4996.00'
	pump	24.00'	5020.00'
Pump: 2 1/2" x 1 1/2" x 20' x RXAC, #2881			

Updated: 5/11/15 - DSB

RECEIVED: May. 17, 2016

Case Name: WALKER HOLLOW UNIT 72
Field: WALKER HOLLOW
County,State: UINTAH,UT

Hist Oil Cum: 111.61 Mbbl
Oper: CITATION OIL & GAS CORP.
PhdWin ID: 05364

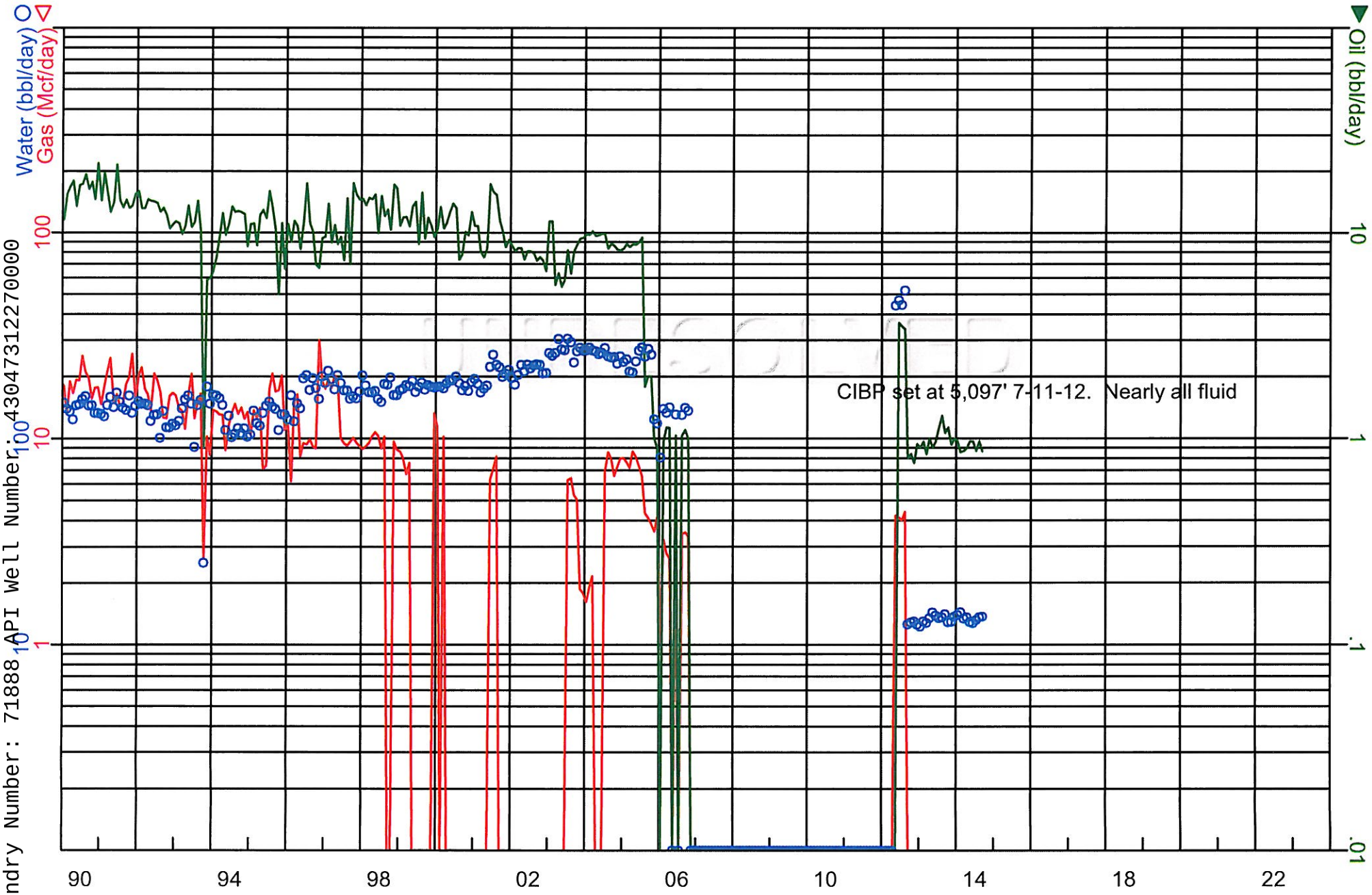

Hist Oil Cum: 111.61 Mbbl

Hist Gas Cum: 81.87 MMcf

Sundry Number: 71888 API well Number: 43047312270000

Scanned with CamScanner