UTAH DIVISION OF OIL AND GAS CONSERVATION

REMARKS: WELL LOG ____ ELECTRIC LOGS ____ FILE X WATER SANDS ____ LOCATION INSPECTED ____ SUB. REPORT/abd. ____

3/15/76 Approval of application terminated

DATE FILED 8-19-75

LAND: FEE & PATENTED STATE LEASE NO. PUBLIC LEASE NO. U-24801 INDIAN

DRILLING APPROVED: 8-22-75

SPUDDED IN:

COMPLETED: PUT TO PRODUCING:

INITIAL PRODUCTION:

GRAVITY A.P.I.

GOR: d

PRODUCING ZONES:

TOTAL DEPTH:

WELL ELEVATION:

DATE ABANDONED: ~~EA 3/15/76~~ Location Abandoned - May 7, 1976

FIELD: Wildcat 3/86

UNIT:

COUNTY: Tooele

WELL NO. ALPHA GOV'T. #2 API NO: 43-045-30002

LOCATION 660 FT. FROM (N~~X~~) LINE. ~~XXX~~ 1980 FT. FROM ~~XX~~ (W) LINE. C NE NW ¼ – ¼ SEC. 3

TWP.	RGE.	SEC.	OPERATOR	TWP.	RGE.	SEC.	OPERATOR
				2 S	17 W	3	ALPHA MINERALS

111111 aplication terminated 3/15/76

Form 9-331 C
(May 1963)

SUBMIT IN TRIPLICATE
(Other instructions on reverse side)

Form approved.
Budget Bureau No. 42-R1425.

3

UNITED STATES
DEPARTMENT OF THE INTERIOR
GEOLOGICAL SURVEY

APPLICATION FOR PERMIT TO DRILL, DEEPEN, OR PLUG BACK

5. LEASE DESIGNATION AND SERIAL NO.: U 24801

6. IF INDIAN, ALLOTTEE OR TRIBE NAME: ------

7. UNIT AGREEMENT NAME: ------

8. FARM OR LEASE NAME: ------

9. WELL NO.: Alpha Minerals No. 2 Gov't

10. FIELD AND POOL, OR WILDCAT: Wildcat

11. SEC., T., R., M., OR BLK. AND SURVEY OR AREA: Sec. 3, T.2S.,R.17W S. L. Mer.

1a. TYPE OF WORK: DRILL [X] DEEPEN [ ] PLUG BACK [ ]

b. TYPE OF WELL: OIL WELL [X] GAS WELL [ ] OTHER SINGLE ZONE [ ] MULTIPLE ZONE [ ]

2. NAME OF OPERATOR: Alpha Minerals

3. ADDRESS OF OPERATOR: 287 Riverside Ave. Westport, Conn. 06880

4. LOCATION OF WELL (Report location clearly and in accordance with any State requirements.*)
At surface: Lot #3 1980' E of West Line 660 S of North Line
At proposed prod. zone: Sec. 3 T.2S.,R.17W., S. L. Mer. (NENW)

12. COUNTY OR PARISH: Tooele

13. STATE: Utah

14. DISTANCE IN MILES AND DIRECTION FROM NEAREST TOWN OR POST OFFICE*: 16 miles East of Wendover, Utah

15. DISTANCE FROM PROPOSED* LOCATION TO NEAREST PROPERTY OR LEASE LINE, FT. (Also to nearest drlg. unit line, if any): 660

16. NO. OF ACRES IN LEASE: 2559.04

17. NO. OF ACRES ASSIGNED TO THIS WELL: 40

18. DISTANCE FROM PROPOSED LOCATION* TO NEAREST WELL, DRILLING, COMPLETED, OR APPLIED FOR, ON THIS LEASE, FT.: ----

19. PROPOSED DEPTH: 2500

20. ROTARY OR CABLE TOOLS: Rotary

21. ELEVATIONS (Show whether DF, RT, GR, etc.): GR 4221

22. APPROX. DATE WORK WILL START*: 9-1-75

23. PROPOSED CASING AND CEMENTING PROGRAM

SIZE OF HOLE	SIZE OF CASING	WEIGHT PER FOOT	SETTING DEPTH	QUANTITY OF CEMENT
10"	8 5/8"	20 lb.	300'	50 sacks
7 7/8	5 1/2"	15.5 lb.	2500'	Thru production zones

A 7 inch hole will be drilled to 2500 feet. If the well is a producer, $5\frac{1}{2}$" - 15.5 lb. production casing will be set and cemented through the production zone.

IN ABOVE SPACE DESCRIBE PROPOSED PROGRAM: If proposal is to deepen or plug back, give data on present productive zone and proposed new productive zone. If proposal is to drill or deepen directionally, give pertinent data on subsurface locations and measured and true vertical depths. Give blowout preventer program, if any.

24.

SIGNED William H. Hatch TITLE President DATE Aug 4, 1975

(This space for Federal or State office use)

PERMIT NO. 43-045-30002 APPROVAL DATE

APPROVED BY TITLE DATE

CONDITIONS OF APPROVAL, IF ANY:

*See Instructions On Reverse Side

U.S. G_LO_CAL SURVEY, CONSERVATI_ D_ISION

FROM: DISTRICT GEOLOGIST, SALT LAKE CITY, UTAH

TO: DISTRICT ENGINEER, SALT LAKE CITY, UTAH

Well	Location	Lease No.
Alpha Minerals #2 Gov't.	1980'FWL, 660'FNL sec. 3, T. 2 S., R. 17 W., SLM, Tooele Co. Gr. El. 4221'	U-24801

1. Stratigraphy and Potential Oil and Gas Horizons. The Shell Oil Co.-Bonneville Ltd. #1 (sec. 4, T. 2 S., R. 18 W.) Saldero (Fee) reported tops: Surface-Alluvium, Tertiary-1375', Volcanic Breccia-1600', Volcanic Tuff-1792', Volcanic Ss.-1840'-60', Breccia-1860', Andesite-2640', Basalt-2740'. (See remarks.)

2. Fresh Water Sands. Several brine zones may be encountered from surface to base of Lacustrine deposits.

3. Other Mineral Bearing Formations. (Coal, Oil Shale, Potash, Etc.) Prospectively valuable for sodium and potash. Within Known Leasing area for sodium and potash.

4. Possible Lost Circulation Zones. Shallow lacustrine zones may take in water.

5. Other Horizons Which May Need Special Mud, Casing, or Cementing Programs. Unknown.

6. Possible Abnormal Pressure Zones and Temperature Gradients. Unknown.

DUPLICATE COPY

7. Competency of Beds at Proposed Casing Setting Points. Unknown.

8. Additional Logs or Samples Needed. Temp. log, Resistivity, brine samples, etc. DST's of brine zones would be very useful.

9. References and Remarks Remote from KGS. There is a distinct possibility that this test is exploratory for potassium rich brines being drilled on O&G lease. Please contact WRD (Greg Lines) as soon as spud date is known.

Date: August 21, 1975 STATE OIL & GAS Signed: S R Allt

FEDERAL OIL AND GAS LEASE

12-POINT DEVELOPMENT PLAN FOR SURFACE USE.

ALPHA MINERALS NO. 1 AND NO. 2 GOVERNMENT

---

1. Existing roads include Interstate-80 and Route 50-40 access road which extend eastward from Wendover. The exit from route 50-40 will be an existing road which crosses the railroad and extends about 3 thousand feet south to a VOR Station operated by the FAA. This crossing is situated about 1/4 mile west of mile post 821 on the W. P. Railroad. (See Item A.)

2. Planned access roads - Because the VOR Station must be protected against vibrations, the access road must not be nearer than 1000 feet from the VOR Station. The access road will be built around the VOR Station to give this clearance as indicated on the accompanying map. (See Item A.)

   Approximately 2 1/2 miles of blading to smooth the top portion of an existing dune area will be undertaken with the possible addition of broken rock fill to be added to boggy areas.

3. There are no existing wells within a two mile radius.

4. Covered by 1 and 2 above. (See Item A)

5. (See Item B)

6. All the known ground water and surface water in the area is saline or becomes saline. Water for drilling will be obtained from an open saline canal located on the south border near the center of Sec. 15, T1S-R17W.

7. Cuttings will go into the reserve pit and covered after completion and garbage and trash will go into a burn pit and later buried.

8. No camps are contemplated.

9. No airstrips are contemplated.

10. See Item C.

11. Pits will be covered with dune sand from the area and returned to approximate original contour.

12. The general area is very flat with the exception of sand dunes that extend from the middle of Section 22, T. 1S., R17W, south ward across Sections 27 and 34 of T.1S., R17W., and it extends about 1/3 mile into Section 3, T.2S., R17W. S. L. mer. The

dunes extend across in an east-west direction from about 500 feet to 700 or 800 feet in places, and they range in vertical elevation from a few feet to about 30 feet above the surrounding mud flats. The water table appears to be within a few feet of the surface and is very saline in nature. A few desert type shrubs are growing on the sand dunes. There are none on the mud flats.

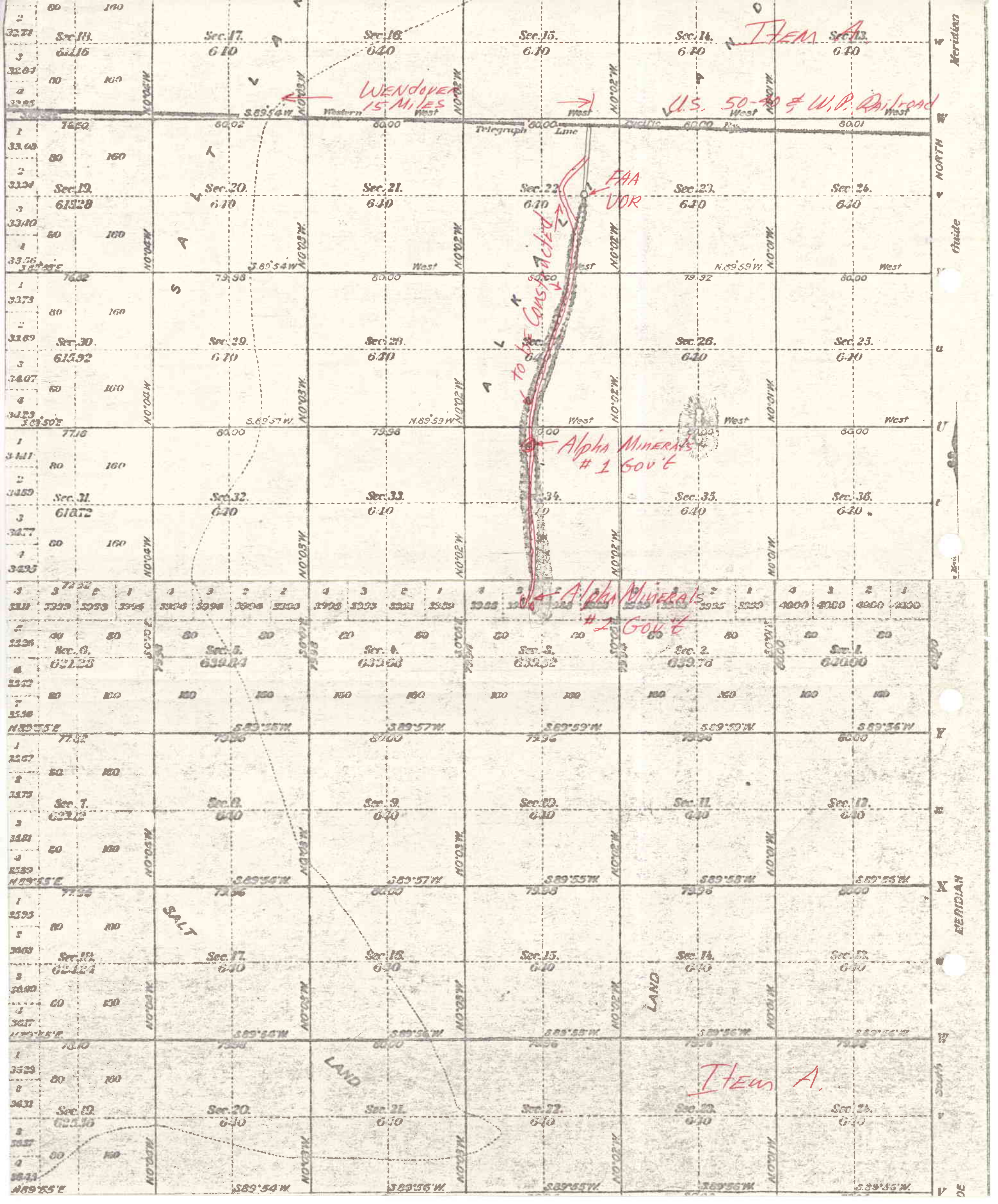

Item A
Wendover 15 Miles
U.S. 50-40 & W.P. Railroad
Telegraph Line
FAA VOR
To be Constructed
Alpha Minerals #1 Gov't
Alpha Minerals #2 Gov't
SALT LAND
Item A.
Meridian
Guide
NORTH
MERIDIAN
South

ITEM B

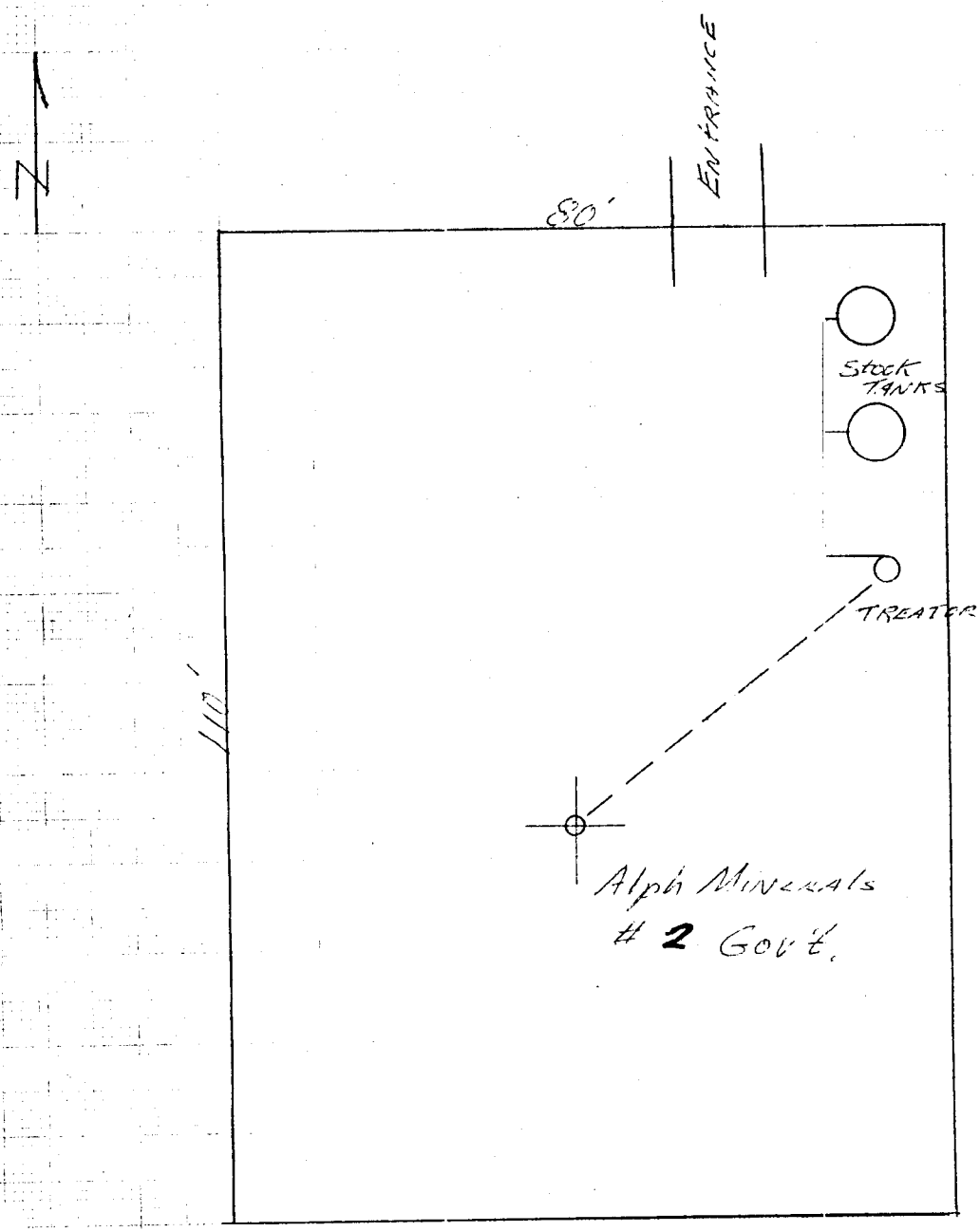

LOCATION LAYOUT & TANK BATTERY

SITE - TOOELE COUNTY UTAH

7- POINT DRILLING SAFETY PLAN

1. Surface casing:

Hole Diameter	Casing	Per/ft#	Amount
10"	8 5/8"	20 Lb/ft	300 Feet

2. Double ram pipe and blind rams with spherical close on top with flange to attach BOP. See item A.

3. No intermediate case will be set.

4. Blowout preventer: See Item A.

5. A float will be used with the bit and the mud system will be checked periodically by a mud engineer.

6. Anticipated bottom hole pressure: 1500 lbs. maximum.

7. Drilling fluid: salt saturated water base mud.

Item 4

BLOWOUT PREVENTERS

TYPE LWS—6" AND 10"

RUCKER Shaffer

1850 MELLIE ESPERSON BUILDING • HOUSTON, TEXAS 77002 • (713) 228-7401 • TELEX: 762-811

RUCKER-SHAFFER TYPE LWS PREVENTERS—6", 3000 & 5000 PSI W.P.—10", 3000 PSI W.P.

EXPLODED VIEW PARTS ILLUSTRATION

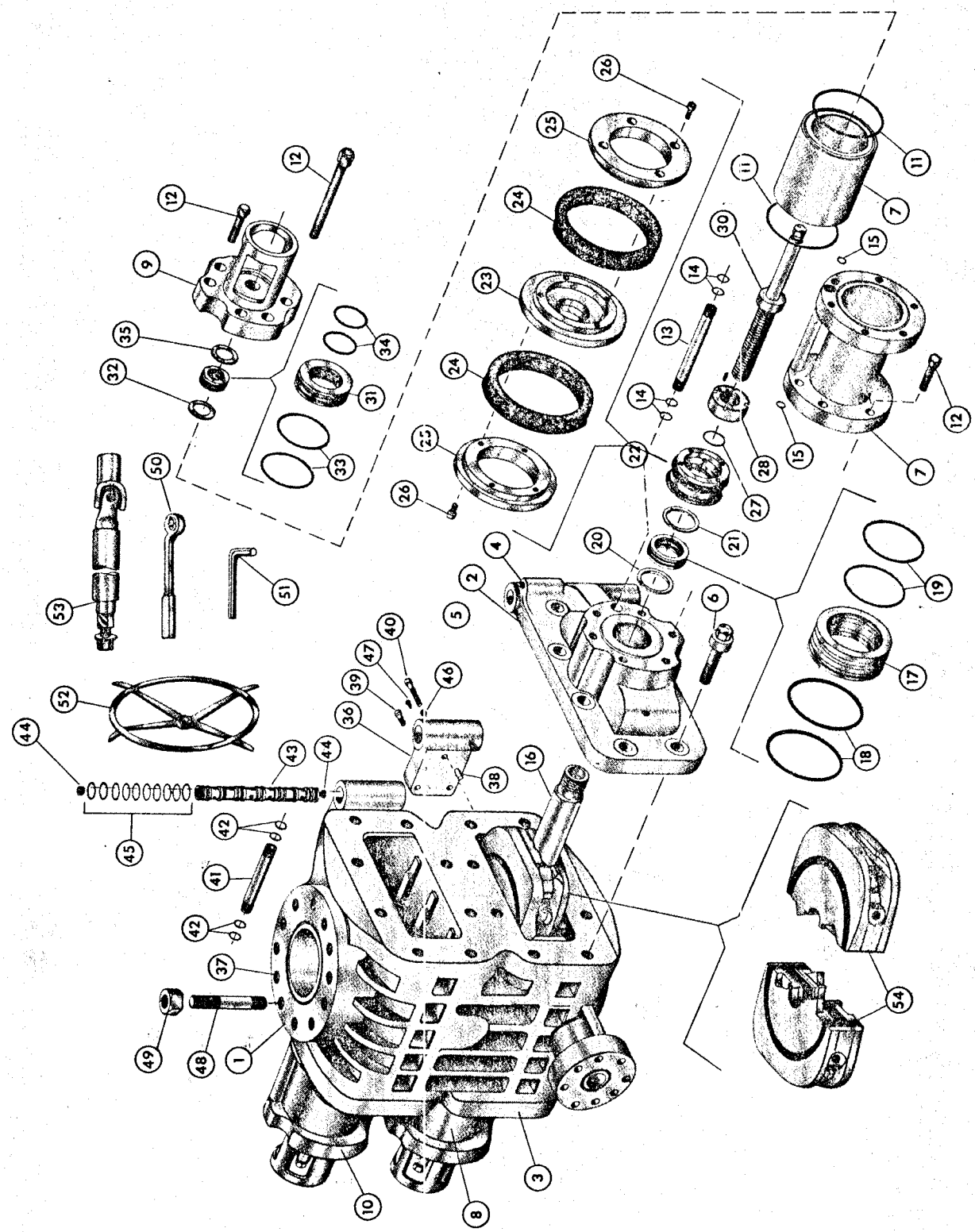

RUCKER Shaffer

1850 MELLIE ESPERSON BUILDING • HOUSTON, TEXAS 77002 • (713) 228-7401 • TELEX: 762-811

BLOWOUT PREVENTERS
TYPE LWS—6" AND 10"

RUCKER-SHAFFER TYPE LWS PREVENTERS—6", 3000 & 5000 PSI W.P.—10", 3000 PSI W.P.

PARTS AND SPECIFICATION DATA

Refer to Illus. P. 3864

Item Number	NAME OF PART	Number Required: Single	Number Required: Double	7 1/16" Bore, Single & Double, 6", 3000 PSI W.P.	7 1/16" Bore, Single & Double, 6", 5000 PSI W.P.	11" Bore, Single & Double, 10", 3000 PSI W.P.
1	Body	1	1	.....	.....	.....
2	Door, Right Hand	1	2	133002	133002	132402
3	Door, Left Hand	1 (1)**	2 (1)**	133003	133003	132403
4	Plug	6	12	65001	65001	65001
5	O-Ring, Door	2 (2)	4 (4)	30030	30030	30106
6	Cap Screw, Door	12 (4)	24 (4)	.....	.....	133012
		16	32	133012	133012	.....
7	Cylinder, Right Hand	1	2	133004	133004	132404
8	Cylinder, Left Hand	1	2	133004	133004	132405
9	Cylinder Head, Right Hand	1	2	133005	133005	132406
10	Cylinder Head, Left Hand	1	2	133006	133006	132407
11	O-Ring, Cylinder & Cylinder Head	4 (4)	8 (8)	30141	30141	30141
12	Cap Screw, Cylinder & Cylinder Head	12 (4)	24 (4)	133011	133011	.....
		24	48	.....	.....	10606
13	Manifold, Cylinder	2	4	133007	133007	.....
14	O-Ring, Cylinder Manifold	8 (8)	16 (16)	30056	30056	.....
15	O-Ring, Cylinder Manifold Port	4 (4)	8 (8)	.....	.....	30058
16	Ram Shaft	2	4	133008	133008	132408
17	Packing Adapter, Ram Shaft	2	4	132415	132415	132415
18	O-Ring, Packing Adapter—Outer	4 (4)	8 (8)	30077	30077	30077
19	O-Ring, Packing Adapter—Inner	4 (4)	8 (8)	30000	30000	30000
20	Retainer, Packing Adapter	2	4	40952	40952	40952
21	Scraper Ring, Ram Shaft	2	4	40395	40395	40395
22	Piston Assembly	2	4	132413	132413	132413
23	Body	2	4	132420	132420	132420
24	Rubber	4 (4)	8 (8)	132422	132422	132422
25	Retainer, Rubber	4	8	132421	132421	132421
26	Cap Screw, Rubber Retainer	16 (4)	32 (8)	132423	132423	132423
27	O-Ring	2 (2)	4 (4)	30071	30071	30071
28	Locknut, Piston	2	4	132414	132414	132414
29	Set Screw	2	4	10015	10015	10015
30	Locking Shaft	2	4	133009	133009	132409
31	Thrust Bushing, Locking Shaft	2	4	130014	130014	130014
32	Retainer, Thrust Bushing	2	4	40146	40146	40146
33	O-Ring, Thrust Bushing—Outer	4 (4)	8 (8)	30011	30011	30011
34	O-Ring, Thrust Bushing—Inner	4 (4)	8 (8)	30065	30065	30065
35	Scraper Ring, Locking Shaft	2	4	40384	40384	40384
36	Hinge Bracket, Right Hand	1	2	132410	132410	132428
37	Hinge Bracket, Left Hand (Not shown)	1	2	132411	132411	132429
38	Dowel Pin	4	8	50080	50080	50080
39	Cap Screw, Hinge Bracket—Short	4	8	10691	10691	.....
		8	16	.....	.....	10691
40	Cap Screw, Hinge Bracket—Long	2	4	10622	10622	.....
41	Manifold, Hinge—Straight	2	4	132427	132427	132430
42	O-Ring, Hinge Manifold	8 (8)	16 (16)	30054	30054	30054
43	Hinge Pin	2	4	133010	133010	132417
44	Plug	4	8	65001	65001	65001
45	O-Ring, Hinge Pin	20 (20)	40 (40)	30061	30061	30061
46	Retainer, Hinge Pin	2	4	132424	132424	132424
47	Plug, Thread Protector	4	8	66327	66327	66327
48	Stud, Body	24	24	10593	10592	.....
		32	32	.....	.....	10598
49	Nut, Body Stud	24	24	20003	20011	.....
		32	32	.....	.....	20011
50	Wrench, Door	1	1	50363	50363	50363
51	Wrench, Cylinder & Cylinder Head	1	1	50133	50133	50133
52	Handwheel	2	4	131107	131107	131107
53	Universal Joint—2"	2	4	202011	202011	202011
*54	Ring Gasket	2	2	50201	50202	50205
55	Ram Assembly	1	2	SEE TABLES—PAGE 3880-81		

* Not a Standard Accessory. ** All numbers in ( ) parentheses indicate spare parts recommended for remote locations.

NOTE: Certain Preventers with multiple outlets require offset manifold piping. When ordering such offset manifold piping, be sure to state size and pressure rating of Preventer—and size of outlets in the body.

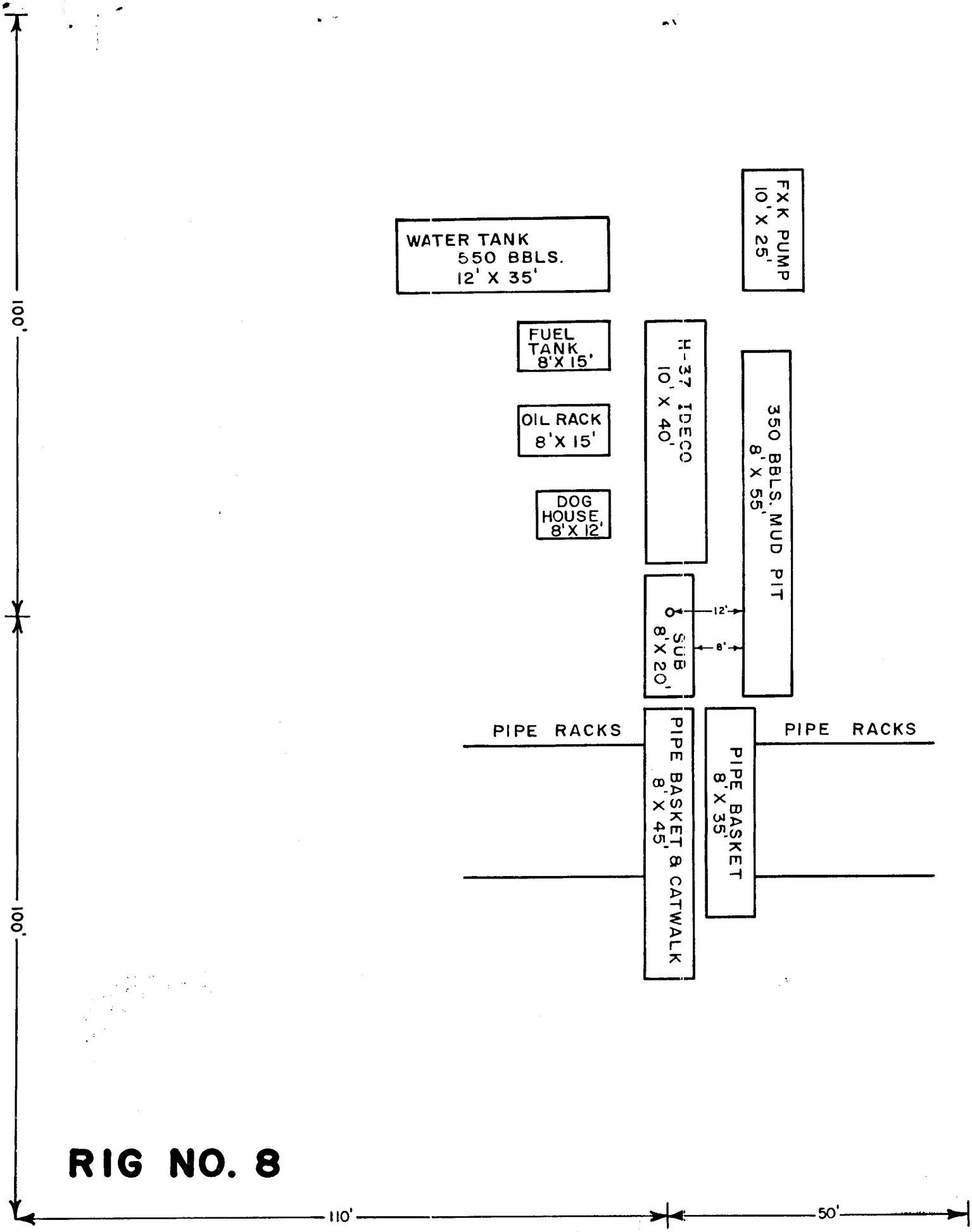

RIG NO. 8

SCALE : 1" = 20'

DIVISION OF OIL, GAS, AND MINING

FILE NOTATIONS

Date: Aug. 19-

Operator: Alpha Minerals

Well No: Alpha Gov't. #2

Location: Sec. 3 T. 25 R. 17W County: Iron

File Prepared [✓] Entered on N.I.D. [✓]

Card Indexed [✓] Completion Sheet [ ]

Checked By:

Administrative Assistant: [signature]

Remarks:

Petroleum Engineer/Mined Land Coordinator: [signature]

Remarks:

Director: [signature]

Remarks:

Include Within Approval Letter:

Bond Required [ ] Survey Plat Required [ ]

Order No. _____ [ ] Blowout Prevention Equipment [ ]

Rule C-3(c) Topographical exception/company owns or controls acreage within a 660' radius of proposed site [ ]

O.K. Rule C-3 [✓] O.K. In _____ Unit [ ]

Other: [ ]

[signature] [✓] Letter Written

August 22, 1975

Alpha Minerals
287 Riverside Avenue
Westport, Connecticut 06880

Re: Well No's:
Alpha Gov't. #1,
Sec. 34, T. 1 S, R. 17 W,
Alpha Gov't. #2,
Sec. 3, T. 2 S, R. 17 W,
Tooele County, Utah

Gentlemen:

Insofar as this office is concerned, approval to drill the above referred to well is hereby granted in accordance with the General Rules and Regulations and Rules of Practice and Procedure.

Should you determine that it will be necessary to plug and abandon this well, you are hereby requested to immediately notify the following:

PATRICK L. DRISCOLL - Chief Petroleum Engineer
HOME: 272-5813
OFFICE: 323-5771

Enclosed please find Form OGC-8-X, which is to be completed whether or not water sands (aquifers) are encountered during drilling.

The API number assigned to this well(s) is:

#1: 43-045-30001 #2: 43-045-30002

Very truly yours,

DIVISION OF OIL, GAS, AND MINING

POOR COPY

CLEON B. FEIGHT
DIRECTOR

CBF:sw

cc: U.S. Geological Survey

Form 9-331 C
(May 1963)

SUBMIT IN TRIPLICATE*
(Other instr[illegible] on reverse[illegible])

Form approved.
Budget Bureau No. 42-R1425.

UNITED STATES
DEPARTMENT OF THE INTERIOR
GEOLOGICAL SURVEY

APPLICATION FOR PERMIT TO DRILL, DEEPEN, OR PLUG BACK

5. LEASE DESIGNATION AND SERIAL NO.: U 24801

6. IF INDIAN, ALLOTTEE OR TRIBE NAME: -------

7. UNIT AGREEMENT NAME: -------

8. FARM OR LEASE NAME: -------

9. WELL NO.: Alpha Minerals No. 2 G

10. FIELD AND POOL, OR WILDCAT: Wildcat

11. SEC., T., R., M., OR BLK. AND SURVEY OR AREA: Sec. 3, T.2S., R.17W S. L. Mer.

1a. TYPE OF WORK: DRILL [X] DEEPEN [ ] PLUG BACK [ ]

b. TYPE OF WELL: OIL WELL [X] GAS WELL [ ] OTHER SINGLE ZONE [ ] MULTIPLE ZONE [ ]

2. NAME OF OPERATOR: Alpha Minerals

3. ADDRESS OF OPERATOR: 287 Riverside Ave. Westport, Conn. 06880

4. LOCATION OF WELL (Report location clearly and in accordance with any State requirements.*)
At surface: Lot #3 1980' E. of West Line 660 S of North Line
At proposed prod. zone: Sec. 3 T.2S., R.17W., S. L. Mer.

14. DISTANCE IN MILES AND DIRECTION FROM NEAREST TOWN OR POST OFFICE*: 16 miles East of Wendover, Utah.

12. COUNTY OR PARISH: Tooele

13. STATE: Utah

15. DISTANCE FROM PROPOSED* LOCATION TO NEAREST PROPERTY OR LEASE LINE, FT. (Also to nearest drlg. unit line, if any): 660

16. NO. OF ACRES IN LEASE: 2559.04

17. NO. OF ACRES ASSIGNED TO THIS WELL: 40

18. DISTANCE FROM PROPOSED LOCATION* TO NEAREST WELL, DRILLING, COMPLETED, OR APPLIED FOR, ON THIS LEASE, FT.: -----

19. PROPOSED DEPTH: 2500

20. ROTARY OR CABLE TOOLS: Rotary

21. ELEVATIONS (Show whether DF, RT, GR, etc.): GR 4221

22. APPROX. DATE WORK WILL START*: 9-1-75

23. PROPOSED CASING AND CEMENTING PROGRAM

SIZE OF HOLE	SIZE OF CASING	WEIGHT PER FOOT	SETTING DEPTH	QUANTITY OF CEMENT
10"	8 5/8"	20 lb.	300'	50 sacks
7 7/8	5 1/2"	15.5	2500'	Thru production zones

A 7 inch hole will be drilled to 2500 feet. If the well is a producer, $5\frac{1}{2}$" - 15.5 lb. production casing will be set and cemented through the production zone.

RECEIVED
OCT 22 1975
OIL, GAS, & MINING

File
DUPLICATE COPY

IN ABOVE SPACE DESCRIBE PROPOSED PROGRAM: If proposal is to deepen or plug back, give data on present productive zone and proposed new productive zone. If proposal is to drill or deepen directionally, give pertinent data on subsurface locations and measured and true vertical depths. Give blowout preventer program, if any.

24.

SIGNED William H. Hatch TITLE President DATE Aug 4, 1975

(This space for Federal or State office use)

PERMIT NO. _____ APPROVAL DATE _____

APPROVED BY James W. Shelton TITLE ACTING DISTRICT ENGINEER DATE OCT 17 1975

CONDITIONS OF APPROVAL, IF ANY:

Approval Notice:
Utah State Oil & Gas

*See Instructions On Reverse Side

Bx 53

PLAT OF SURVEY OF PROPOSED OIL WELL LOCATION

TOOELE COUNTY, UTAH

FOR

ALPHA MINERALS NO. 2 GOVERNMENT

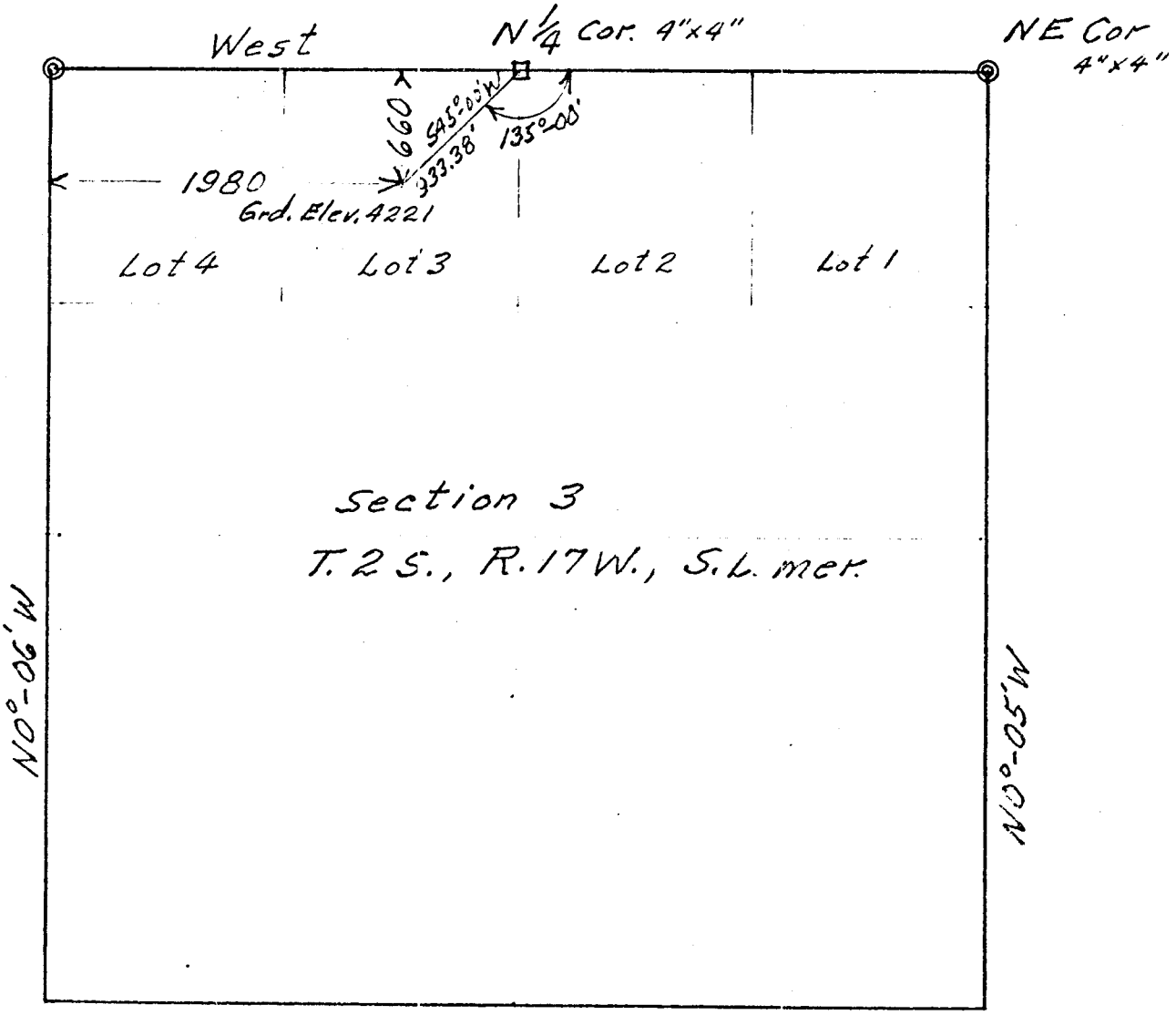

DATE July 25, 1975

SURVEYED BY Eugene W. Pearson

EUGENE W. PEARSON
License No. 1633

ATTCHMENT 2-A

8/26/75

SUMMARY ENVIRONMENTAL IMPACT EVALUATION

ALPHA MINERALS
No. #2 GOV'T
NE NW SEC. 3 - 25 - 17W
TOOELE COUNTY, UTAH
U-24801

ALPHA MINERALS REPRESENTATIVES
1) Gene Pearson
2) Gary Robbins

BLM, SLC { H. Wilson, L. Decker, T. Hartsel

USGS, SLC - R. Henricks

☐ - NO IMPACT
▨ - ENHANCE
▨ - MINOR IMPACT
☒ - MAJOR IMPACT

	Construction				Pollution				Drilling Production						Transport Operations			Accidents		Others
	Roads, bridges, airports	Transmission lines, pipelines	Dams & impoundments	Others (pump stations, compressor stations, etc.)	Burning, noise, junk disposal	Liquid effluent discharge	Subsurface disposal	Others (toxic gases, noxious gas, etc.)	Well drilling	Fluid removal (Prod. wells, facilities)	Secondary Recovery	Noise or obstruction of scenic views	Mineral processing (ext. facilities)	Others	Trucks	Pipelines	Others	Spills and leaks	Operational failure	
Land Use																				
Forestry																				
Grazing																				
Wilderness																				
Agriculture																				
Residential-Commercial																				
Mineral Extraction																				
Recreation																				
Scenic Views	/				/				/			/			/					
Parks, Reserves, Monuments NA																				
Historical Sites NA																				
Unique Physical Features																				
Flora & Fauna																				
Birds	/				/				/						/					
Land Animals	/				/				/						/			/		
Fish NA																				
Endangered Species																				
Trees, Grass, Etc.	/				/			/										/		
Phy. Charact.																				
Surface Water NA																				
Underground Water SALINE									/											
Air Quality	/				/				/			/			/					
Erosion SLIGHT	/																			
Other																				
Effect On Local Economy	O																			
Safety & Health								/				/			/					

Others
2 3/4 SW OF F.A.A. VORTEX STATION
WEST OF WENDOVER BOMBING
WILL CAUSE NO EFFECT ON EITHER

cc. Casper
Denver
State Office

DUPLICATE COPY

Lease U-24801

Well No. & Location No. #2 Gov't NE NW SEC. 3 T. 2S R. 17W

-Tooele County, Utah

ENVIRONMENTAL IMPACT ANALYSIS - ATTACHMENT 2-B

1. Proposed Action

U.S.G.S. APPROVAL OF AN APPLICATION FOR PERMIT TO DRILL WHEREBY ALPHA MINERALS COMPANY PROPOSES TO DRILL A WILDCAT OIL WELL TO THE DEPTH OF 2500 FEET. THEY PLAN TO CONSTRUCT A 1 mile EXTENSION TO THE NEW ACCESS ROAD FOR No. #1 GOV'T WELL (NENW SEC 34-1S-17W) TO THE DRILL SITE. ALPHA MINERALS PLANS TO CLEAR AND LEVEL A DRILL SITE 110 FT x 80 FT. AND DIG A RESERVE PIT 50 FT. x 50 FT. WITH A DEPTH OF 8 FEET.

2. Location and Natural Setting (existing environmental situation)

THE WELL SITE IS IN AN AREA WHERE SANDY (QUARTZ) SOIL WITH SMALL PEBBLES ON THE SURFACE PREVAILS. THE EROSION POTENTIAL IS CLASSED AS MINOR BECAUSE OF THE TYPE OF SOIL AND THE RELATIVE FLATNESS OF THE DRILL SITE AREA. THE VEGETATION CONSISTS OF SPARSE COLLECTION OF GREASEWOOD, SALT BRUSH, AND SAGE BRUSH. THE WILDLIFE CONSISTS OF THE USUAL DESERT FAUNA IN THIS AREA WITH NO ENDANGERED SPECIES. THERE IS NO GRAZING ON LOCATION OR AREA SURROUNDING. THERE ARE NO NATIONAL PARKS, MONUMENTS, OR HISTORICAL SITES IN THIS AREA. THERE ARE NO KNOWN ARCHEOLOGICAL ~~SITES AROUND~~ OR NEAR THIS WELL SITE. THE AREA, IN WHICH THE WELL IS TO BE DRILLED, IS KNOWN AS THE BONNEVILLE SALT FLATS. THE SALTS FLATS HAVE A DESOLATED APPEARANCE, BUT ARE NOT CLASSIFIED AS UNIQUE. THE WATER IN THIS AREA IS KNOWN TO BE OF SALINE CHARACTERISTICS AND WILL BE USED IN DRILLING. THE WELL SITE IS LOCATED 3 3/4 MILES SOUTH OF INTERSTATE 40, 2 3/4 miles SOUTHWEST OF A F.A.A. VORTEX STATION, WEST OF THE WENDOVER BOMBING RANGE, AND IN THE AREA ON THE WEST SIDE OF A SAND DUNE. THERE IS A POTASH PLANT ABOUT 5 miles TO THE WEST OF THE SITE.

3. Effects on Environment by Proposed Action (potential impact)

THE DRILLING AND COMPLETION OF A DRY HOLE OR FAILURE WOULD HAVE LITTLE LONGTERM EFFECT ON THE ENVIROMENT. DISCOVER OF A OIL FIELD WOULD HAVE A MAJOR EFFECT IN THAT THE CHARACTER OF THE AREA WOULD BE CHANGED. IF A DISCOVERY IS MADE, PLANNING WOULD BE REQUIRED TO AVOID SERIOUS DEGRADATION.

THE CONSTRUCTION OF THE ACCESS ROAD WOULD NOT BENEFIT THE AREA, AND WOULD CAUSE A VISUAL SCARE BECAUSE THE ROAD WILL HAVE TO BE BUILD UP FROM THE TOP OF THE SAND.

THERE WOULD BE MODERATE SCARRING OF THE NOW NEARLY NATURAL AREA WHICH WOULD REQUIRE 2-3 YEARS TO OBLITERATE NATURALLY.* PLANTING OR ANY OTHER ACTIVITY OF THIS SORT WOULD BE INEFFECTIVE.

THE DRILLING AND ASSOCIATED TRAFFIC WILL ADD A NEGLIGIBLE AMOUNT OF EMISSION TO THE NOW PRESENT AIR, AS WELL AS TEMPORARILY DISTURBING THE FAUNA.

INDUCED OR ACCELERATED EROSION WOULD BE NEGLIGIBLE BECAUSE OF THE TERRAIN OF THE AREA.

AN UNCONTROLLED BLOWOUT COULD CAUSE ENVIRONMENTAL PROBLEMS BUT COULD BE EASILY CLEANED UP.

PRESENCES OF DRILLING RIG (TRUCK MOUNTED) COULD CAUSE MINOR IRRITATION TO THE SCENIC VIEWING OF THIS AREA.

* DRIFTING SAND DUNES WOULD BE THE NATURAL CAUSE THAT WOULD OBLITERATE NOW SCARRING CAUSED BY DRILLING.

4. Alternatives to the Proposed Action

DENY APPROVAL OF APPLICATION FOR PERMIT TO DRILL.

DENYING THE PROPOSED PERMIT AND SUGGESTING AN ALTERNATE LOCATION WHERE ENVIROMENTAL IMPACT WOULD BE LESSENED

5. Adverse Environmental Effects Which Cannot Be Avoided

MINOR AIR POLLUTION DUE TO DRILLING AND ASSOCIATED TRAFFIC.

TEMPORARY DISTURBANCE OF WILDLIFE

TEMPORARY MESS DUE TO DRILLING ACTIVITY FOR ABOUT 6 MONTHS AND REQUIRING 2-3 YEARS TO OBLITERATE ALL SCARS.

SHORT TERM VISUAL INTRUSION OF LANDSCAPE BY DRILLING STRUCTURE.

LOSS OF SOME NATURAL VEGETATION.

6. Determination

(This requested action (~~does~~) (does not) constitute a major Federal action significantly affecting the environment in the sense of NEPA, Section 102(2) (c).

Date Inspected [illegible]

Inspector Robert Kennicke

JAMES W. Shelton (WPM)

U.S. Geological Survey,
Conservation Division
Salt Lake City District
Salt Lake City, Utah

RECEIVED
MAY 10 1976
DIVISION OF OIL
GAS & MINING

Conservation Division
8440 Federal Building
Salt Lake City, Utah 84138

May 7, 1976

Mr. Christian D. Jensen
Alpha Minerals, Inc.
21 Wilton Road East
Ridgefield, CT. 06877

Re: Well No. 2 - Alpha Minerals
NE¼ NW¼, Sec. 3-2S-17W, SLM
Tooele County, Utah
Federal Lease U-24801

Well No. 3 - Alpha Minerals
NW¼ NW¼, Sec. 34-1S-17W
Tooele County, Utah
Federal Lease U-26153

Dear Mr. Jensen:

In response to your letter to Mr. Martens dated April 21, 1976, in which you state "Alpha Minerals plans to take no further action in regards to permits for Wells #2 and #3 on our leases on Bonneville Salt Flats," and also stating "It is our desire to close all open items," please be advised that the Applications for Permit to drill on the referenced wells, which were approved October 17, 1975, are rescinded without prejudice as of this date. Any surface disturbances associated with these approved applications must be restored in accordance with the approved Surface Use Plan prior to release of bonding.

If you should again desire to drill at these locations, please submit new Applications for Permit to Drill.

Sincerely yours,

E. W. Guynn
District Engineer

cc: Div. of O&G, Utah
BLM, Salt Lake City

bcc: O&GS, NRMA, Casper
USGS, Vernal
Well files (2)

EWG:tw