Form DOGC-1a

SUBMIT IN TRIPLICATE*
(Other instructions on reverse side)

STATE OF UTAH
DEPARTMENT OF NATURAL RESOURCES
DIVISION OF OIL & GAS

APPLICATION FOR PERMIT TO DRILL, DEEPEN, OR PLUG BACK

1a. Type of Work
DRILL [XX] DEEPEN [ ] PLUG BACK [ ]

b. Type of Well
Oil Well [ ] Gas Well [ ] Other Gas Storage Withdrawal/Injection Single Zone [ ] Multiple Zone [ ]

2. Name of Operator
Wexpro Company

3. Address of Operator
P. O. Box 458, Rock Springs, WY 82902

4. Location of Well (Report location clearly and in accordance with any State requirements.*)
At surface
NW SE, 2170' FSL, 1449' FEL
At proposed prod. zone

RECEIVED NOV 15 1983 DIVISION OF OIL, GAS & MINING

5. Lease Designation and Serial No.
Fee

6. If Indian, Allottee or Tribe Name
--

7. Unit Agreement Name
--

8. Farm or Lease Name
Coalville Gas Storage

9. Well No.
12

10. Field and Pool, or Wildcat
Gas Storage

11. Sec., T., R., M., or Blk. and Survey or Area
9-2N-5E, SLB&M

12. County or Parrish 13. State
Summit Utah

14. Distance in miles and direction from nearest town or post office*
One half mile northeast of Coalville, Utah

15. Distance from proposed* location to nearest property or lease line, ft. (Also to nearest drlg. line, if any) N/A

16. No. of acres in lease N/A

17. No. of acres assigned to this well N/A

18. Distance from proposed location* to nearest well, drilling, completed, or applied for, on this lease, ft. N/A

19. Proposed depth 2700'

20. Rotary or cable tools
Rotary

21. Elevations (Show whether DF, RT, GR, etc.)
GR 5617' "as graded"

22. Approx. date work will start*
Upon approval

23.
PROPOSED CASING AND CEMENTING PROGRAM

Size of Hole	Size of Casing	Weight per Foot	Setting Depth	Quantity of Cement
17-1/2"	13-3/8"	61	120'	170 sxs w/3% CaCl & ¼# flocele
12-1/4"	9-5/8"	36	1522'	830 sxs w/3% CaCl & ¼# flocele
8-3/4"	7"	20	300'	To be determined from caliper
8-3/4"	7"	23	2700'	portion of sonic log.

This will be a gas storage injection/withdrawal well. After surface casing set, install a 13-5/8" 3000 psi hydraulically operated double gate preventer and a 13-5/8" 3000 psi annular preventer; casing and preventer rams will be pressure tested to 500 psi for 15 minutes. After intermediate casing set, install an 11" 3000 psi double gate hydraulically operated blow out preventer with 4½" rams in the bottom and blind rams in the top, and an 11" 3000 psi annular preventer; surface casing, all preventer rams and Kelly vlave will be pressure tested to 2500 psi for 15 minutes using rig pump and mud. All BOP's will have hand wheels installed which will be operative at time preventers are installed. Mud program: gel water base mud to 135', mud weight increased to 11.5 ppg with lost circulation material to prevent expected salt water flows between 300' and 1422' due to presence of slightly over-pressured salt water sands, remainder of hole also drilled with 11.5 ppg mud to contain expected gas pressure. Geologic Tops: Frontier - surface; Chalk Creek Member - 1422'; Spring Creek Member - 2107'; Observation Zone - 2267'; Base Obs Zone - 2305'; Longwall SS - 2470'; Aspen Shale - 2575'; Kelvin - 2600'. (Continued on Second Sheet)

KELVIN

IN ABOVE SPACE DESCRIBE PROPOSED PROGRAM: If proposal is to deepen or plug back, give data on present productive zone and proposed new productive zone. If proposal is to drill or deepen directionally, give pertinent data on subsurface locations and measured and true vertical depths. Give blowout preventer program, if any.

24.
Signed A. J. Maser Title Drilling Superintendent Date 11-8-83

(This space for Federal or State office use)

Permit No. ..... Approval Date .....

Approved by ..... Title ..... Date .....
Conditions of approval, if any:

*See Instructions On Reverse Side

Form DOGC-1a

SUBMIT IN TRIPLICATE*
(Other instructions on reverse side)

STATE OF UTAH
DEPARTMENT OF NATURAL RESOURCES
DIVISION OF OIL & GAS

APPLICATION FOR PERMIT TO DRILL, DEEPEN, OR PLUG BACK

1a. Type of Work
DRILL ☒ DEEPEN ☐ PLUG BACK ☐

b. Type of Well
Oil Well ☐ Gas Well ☐ Other Gas Storage Withdrawal/Injection Single Zone ☐ Multiple Zone ☐

2. Name of Operator
Wexpro Company

3. Address of Operator
P. O. Box 458, Rock Springs, WY 82902

4. Location of Well (Report location clearly and in accordance with any State requirements.*)
At surface
NW SE, 2170' FSL, 1449' FEL
At proposed prod. zone

5. Lease Designation and Serial No.
Fee

6. If Indian, Allottee or Tribe Name
--

7. Unit Agreement Name
--

8. Farm or Lease Name
Coalville Gas Storage

9. Well No.
12

10. Field and Pool, or Wildcat
Gas Storage

11. Sec., T., R., M., or Blk. and Survey or Area
9-2N-5E, SLB&M

14. Distance in miles and direction from nearest town or post office*
One half mile northeast of Coalville, Utah

12. County or Parrish: Summit
13. State: Utah

15. Distance from proposed* location to nearest property or lease line, ft. (Also to nearest drlg. line, if any): N/A

16. No. of acres in lease: N/A

17. No. of acres assigned to this well: N/A

18. Distance from proposed location* to nearest well, drilling, completed, or applied for, on this lease, ft.: N/A

19. Proposed depth: 2700'

20. Rotary or cable tools: Rotary

21. Elevations (Show whether DF, RT, GR, etc.)
GR 5617' "as graded"

22. Approx. date work will start*
Upon approval

23. PROPOSED CASING AND CEMENTING PROGRAM

Size of Hole	Size of Casing	Weight per Foot	Setting Depth	Quantity of Cement
17-1/2"	13-3/8"	61	120'	170 sxs w/3% CaCl & ¼# flocele
12-1/4"	9-5/8"	36	1522'	830 sxs w/3% CaCl & ¼# flocele
8-3/4"	7"	20	300'	To be determined from caliper
8-3/4"	7"	23	2700'	portion of sonic log.

(Continuation)

Logs: DIL-SFL, CNL-FDC-GR with caliper, BHC-Sonic-GR with caliper, HDT & FIL from surface casing to total depth. Run DST for any significant gas show from surface casing to total depth. No H_2S.

T. 2 N., R. 5 E., S.L.B. & M.
SUMMIT CO., UTAH

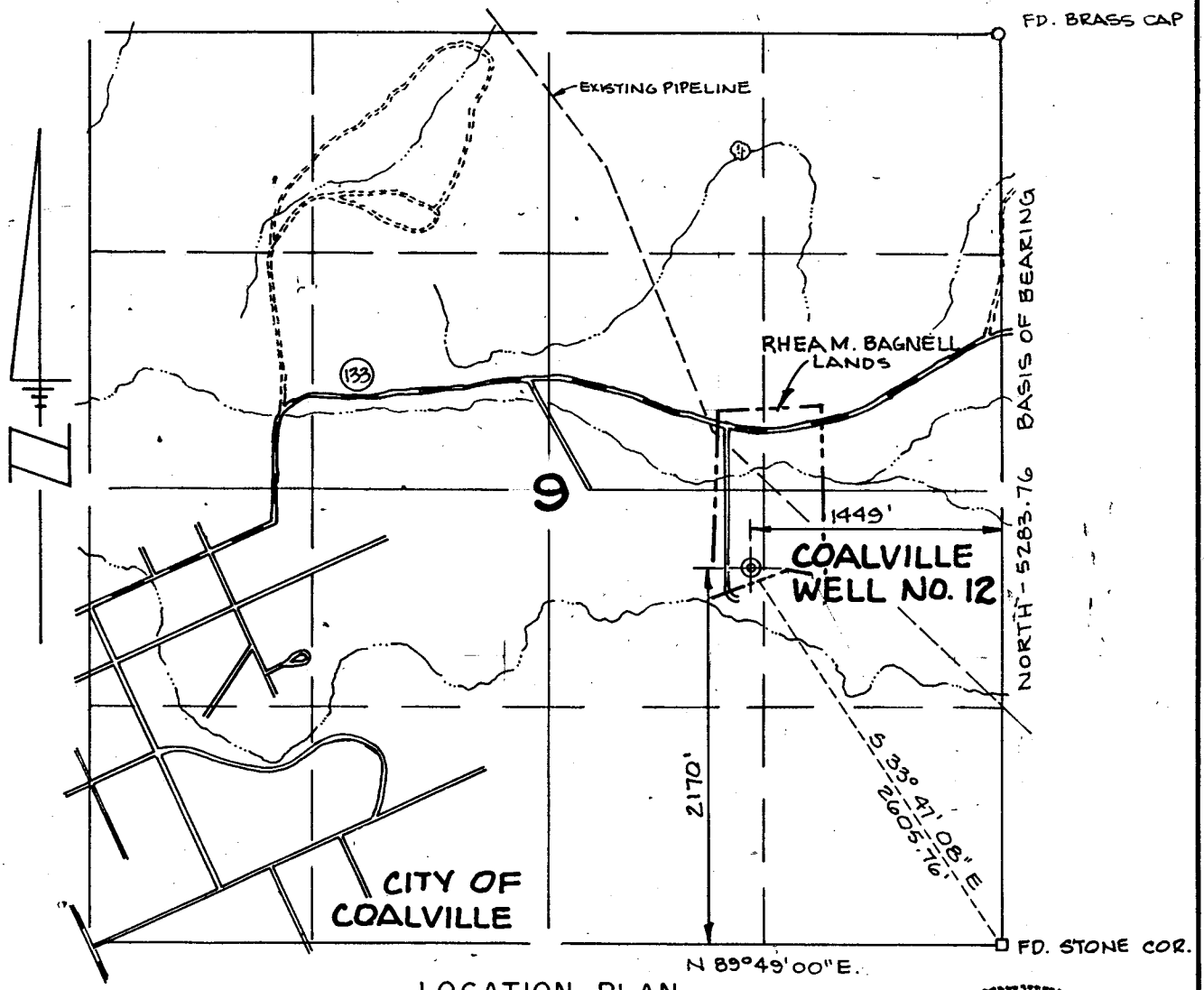

LOCATION PLAN
SCALE 1" = 1000
BAR SCALE
2000 1000 500 0 1000

This is to certify that the above plat was prepared from field notes of actual surveys made by me or under my supervision and that the same are true and correct to the best of my knowledge.

LEGEND
- ⊕ ℄ Well
- ⊕ Stone Corner
- ⊕ Pipe Corner

NOTE: BASIS OF BEARING G.L.O. PLAT DATED 1873

FEE LEASE

Larry G. Bodyfelt
SURVEYOR
LARRY G. BODYFELT, UTAH R.L.S. No. 6339

REGISTERED LAND SURVEYOR No. 6339 LARRY G. BODYFELT STATE OF UTAH

ENGINEERING RECORD	
SURVEYED BY	A.W. CHRISTMANN 10·18·83
REFERENCES	G.L.O. PLAT ☒ U.S.G.S. QUAD. MAP ☒
LOCATION DATA	
FIELD	COALVILLE
LOCATION:	NW 1/4 SE 1/4 SEC. 9, T. 2 N., R. 5 E., S.L.B. & M. 1449 FEL 2170 FSL
SUMMIT COUNTY, UTAH	
WELL ELEVATION: 5617 "AS GRADED" DETERMINED BY EDM TRIG. LEVELS FROM CO. ESTABLISHED B.M.	

WEXPRO COMPANY

CERTIFIED WELL LOCATION AND WELL SITE PLAN

COALVILLE WELL NO. 12

DRAWN: 10·20·83 R.C.P	SCALE: 1" = 1000	
CHECKED:	DRWG. NO. M·22149	1/4
APPROVED:		

CELSIUS/WEXPRO
3000 psi BLOWOUT PREVENTION EQUIPMENT

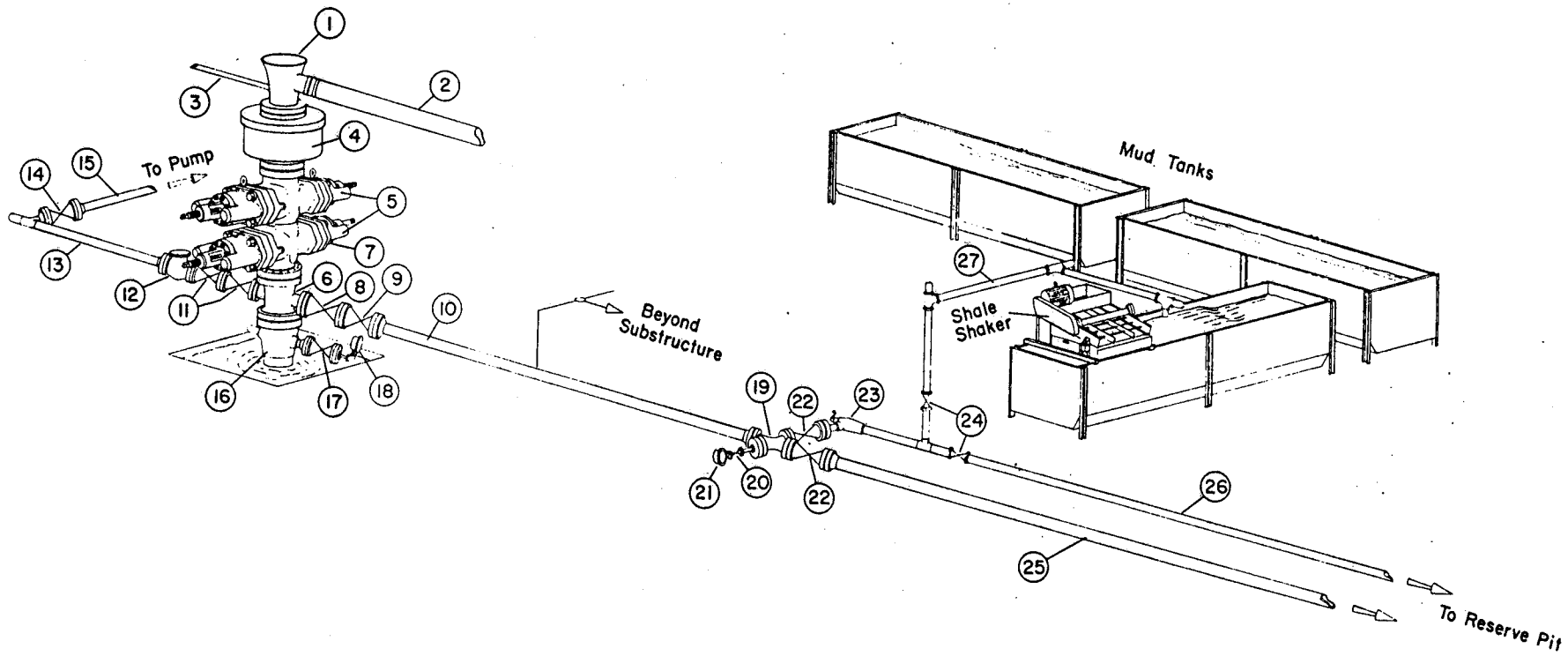

STANDARD CHOKE AND KILL REQUIREMENTS

Nº	ITEM	NOMINAL	ID	TYPE	FURNISHED BY	
					OPER.	CONTR.
19	Cross 3" X 3" 3" X 2"					
20	Gate Valve		1-13/16			
21	Compound Pressure Gage					
22	Gate Valves		3-1/8			
23	Choke Cam H-2 or equilivent	3"	2"			
24	Gate Valves		3-1/8"			
25	Line	3"				
26	Line	3"				
27	Line	3"				

STANDARD STACK REQUIREMENTS

Nº	ITEM	NOMINAL	ID	TYPE	FURNISHED BY	
					OPER.	CONTR.
1	Drilling Nipple					
2	Flowline					
3	Fill up Line	2"				
4	Annular Preventer			Hydril Cameron Shaffer		
5	Two Single or One dual Hydril oper rams.			U.ORC; F.LWS; B.E.		
6	Drilling spool with 3" and 2" outlets			Forged		
7	As Alternate to (6) Run & Kill and Choke lines from outlets in this ram					
8	Gate Valve		3-1/8			
9	Valve-hydraulically operated (Gate)		3-1/8			
10	Choke Line	3"				
11	Gate Valves		2-1/16			
12	Check Valve		2-1/16			
13	Kill Line	2"				
14	Gate Valve		2-1/16			
15	Kill Line to Pumps	2"				
16	Casing Head					
17	Valve Gate ____ Plug ____		1-13/16			
18	Compound Pressure Cage					
	Wear Bushing					

OPERATOR WEXPRO CO DATE 11-22-83

WELL NAME COALVILLE GAS STORAGE #12

SEC NW SE 9 T 2N R 5E COUNTY Summit

43-043-30249
API NUMBER

FEE
TYPE OF LEASE

POSTING CHECK OFF:

- [ ] INDEX
- [ ] MAP
- [ ] HL
- [ ] NID
- [ ]
- [ ] PI

PROCESSING COMMENTS:
GAS STORAGE INJECTION/WITHDRAWAL

APPROVED BY THE STATE
OF UTAH DIVISION OF
OIL, GAS, AND MINING
DATE: 11-22-83
BY: [signature]

✓ CHIEF PETROLEUM ENGINEER REVIEW:
11/22/83 ✓

APPROVAL LETTER:

SPACING:
- [ ] A-3 _____ UNIT
- [x] c-3-a 148-1 3-14-73 CAUSE NO. & DATE
- [ ] c-3-b
- [ ] c-3-c

SPECIAL LANGUAGE:
1- THE PRODUCTION OF OIL OR GAS FROM THIS WELL IS NOT AUTHORIZED. IT MAY BE USED FOR OBSERVATION AND FOR GAS STORAGE INJECTION OR WITHDRAWAL ONLY. SPECIAL ATTENTION IS DIRECTED TOWARDS BLOW OUT PREVENTION.

2- WATER

- [x] RECONCILE WELL NAME AND LOCATION ON APD AGAINST SAME DATA ON PLAT MAP.
- [x] AUTHENTICATE LEASE AND OPERATOR INFORMATION
- [x] VERIFY ADEQUATE AND PROPER BONDING
- [ ] AUTHENTICATE IF SITE IS IN A NAMED FIELD, ETC.
- [ ] APPLY SPACING CONSIDERATION
  - [ ] ORDER _____
  - [ ] UNIT _____
  - [ ] c-3-b
  - [ ] c-3-c
- [ ] CHECK DISTANCE TO NEAREST WELL.
- [x] CHECK OUTSTANDING OR OVERDUE REPORTS FOR OPERATOR'S OTHER WELLS.
- [x] IF POTASH DESIGNATED AREA, SPECIAL LANGUAGE ON APPROVAL LETTER
- [x] IF IN OIL SHALE DESIGNATED AREA, SPECIAL APPROVAL LANGUAGE.
- [x] VERIFY LEGAL AND SUFFICIENT DRILLING WATER

November 22, 1983

Wexpro Company
P. O. Box 458
Rock Springs, Wyoming 82902

RE: Coalville Gas Storage #12
NWSE Sec. 9, T. 2N, R. 5E
2170' FSL, 1449' FEL
Summit County, Utah

Gentlemen:

Insofar as this office is concerned, approval to drill the above referred to gas storage well is hereby granted in accordance with the Order issued in Cause No. 148-1 dated March 14, 1973. (1) Production of oil or gas from this well is not authorized. It may be used for observation and for gas storage injection or withdrawal only. Special attention is directed towards blow out prevention. (2) Prior to spudding, a copy of the Utah Division of Water Rights (801-533-6071) approval for use or purchase of drilling water must be submitted to this office, otherwise this approval is void.

Should you determine that it will be necessary to plug and abandon this well, you are hereby requested to immediately notify the following:

RONALD J. FIRTH - Chief Petroleum Engineer
Office: 533-5771
Home: 571-6068

Enclosed please find Form OGC-8-X, which is to be completed whether or not water sands (acquifers) are encountered during drilling. Your cooperation in completing this form will be appreciated.

Further, it is requested that this Division be notified within 24 hours after drilling operations commence, and that the drilling contractor and rig number be identified.

The API number assigned to this well is 43-043-30249.

Sincerely,

Norman C. Stout
Administrative Assistant

NCS/as
Encl.

Form OGC-1b

SUBMIT IN TRIPLICATE*
(Other instructions on reverse side)

STATE OF UTAH
DEPARTMENT OF NATURAL RESOURCES
DIVISION OF OIL, GAS, AND MINING

SUNDRY NOTICES AND REPORTS ON WELLS

(Do not use this form for proposals to drill or to deepen or plug back to a different reservoir. Use "APPLICATION FOR PERMIT—" for such proposals.)

1. OIL WELL [ ] GAS WELL [X] OTHER Gas Storage, Withdrawal/Injection Well

2. NAME OF OPERATOR: Wexpro Company

3. ADDRESS OF OPERATOR: P. O. Box 458, Rock Springs, WY 82902

4. LOCATION OF WELL (Report location clearly and in accordance with any State requirements.* See also space 17 below.) At surface: NW SE, 2170' FSL, 1449' FEL

5. LEASE DESIGNATION AND SERIAL NO.: Fee

6. IF INDIAN, ALLOTTEE OR TRIBE NAME: --

7. UNIT AGREEMENT NAME: --

8. FARM OR LEASE NAME: Coalville Gas Storage

9. WELL NO.: 12

10. FIELD AND POOL, OR WILDCAT: Gas Storage

11. SEC., T., R., M., OR BLK. AND SURVEY OR AREA: 9-2N-5E, SLB&M

14. PERMIT NO.: 43-043-30249

15. ELEVATIONS (Show whether DF, RT, GR, etc.): GR 5617'

12. COUNTY OR PARISH: Summit

13. STATE: Utah

16. **Check Appropriate Box To Indicate Nature of Notice, Report, or Other Data**

NOTICE OF INTENTION TO:				SUBSEQUENT REPORT OF:			
TEST WATER SHUT-OFF	[ ]	PULL OR ALTER CASING	[ ]	WATER SHUT-OFF	[ ]	REPAIRING WELL	[ ]
FRACTURE TREAT	[ ]	MULTIPLE COMPLETE	[ ]	FRACTURE TREATMENT	[ ]	ALTERING CASING	[ ]
SHOOT OR ACIDIZE	[ ]	ABANDON*	[ ]	SHOOTING OR ACIDIZING	[ ]	ABANDONMENT*	[ ]
REPAIR WELL	[ ]	CHANGE PLANS	[X]	(Other)			[ ]
(Other)	[ ]			(NOTE: Report results of multiple completion on Well Completion or Recompletion Report and Log form.)			

17. DESCRIBE PROPOSED OR COMPLETED OPERATIONS (Clearly state all pertinent details, and give pertinent dates, including estimated date of starting any proposed work. If well is directionally drilled, give subsurface locations and measured and true vertical depths for all markers and zones pertinent to this work.)*

Change surface casing to following:

- run 500' of 13-3/8-inch O.D., 54.5-pound, K-55, 8 round thread, ST&C casing
- cement with 600 sacks Regular Type G with 3% CaCl and 1/4-pound flocele per sack

Run rotating head as a diverter.

APPROVED BY THE STATE OF UTAH DIVISION OF OIL, GAS, AND MINING
DATE: 12/13/83
BY: [signature]

RECEIVED
DEC 12 1983
DIVISION OF OIL, GAS & MINING

18. I hereby certify that the foregoing is true and correct

SIGNED: [signature] TITLE: Drilling Superintendent DATE: 12-9-83

(This space for Federal or State office use)

APPROVED BY _____ TITLE _____ DATE _____
CONDITIONS OF APPROVAL, IF ANY:

*See Instructions on Reverse Side

WATER PERMIT #83-35-35

DIVISION OF OIL, GAS AND MINING

SPUDDING INFORMATION

NAME OF COMPANY: Wexpro

WELL NAME: Coalville Unit #12 (Gas Storage)

SECTION NWSE 9 TOWNSHIP 2N RANGE 5E COUNTY Summit

DRILLING CONTRACTOR MGF

RIG # 61

SPUDDED: DATE 12-10-83

TIME 3:00 PM

HOW Rotary

DRILLING WILL COMMENCE

REPORTED BY Kathy

TELEPHONE # 307-382-9791

DATE 12-12-83 SIGNED AS

WATER OK # 83-35-35

Form OGC-1b

SUB IN TRIPLICATE*
(C instructions on reverse side)

STATE OF UTAH
DEPARTMENT OF NATURAL RESOURCES
DIVISION OF OIL, GAS, AND MINING

SUNDRY NOTICES AND REPORTS ON WELLS

(Do not use this form for proposals to drill or to deepen or plug back to a different reservoir. Use "APPLICATION FOR PERMIT—" for such proposals.)

5. LEASE DESIGNATION AND SERIAL NO.: Fee

6. IF INDIAN, ALLOTTEE OR TRIBE NAME: --

1. OIL WELL ☐ GAS WELL ☐ OTHER Gas Storage - Withdrawal/Injection Well

7. UNIT AGREEMENT NAME: --

2. NAME OF OPERATOR: Wexpro Company

8. FARM OR LEASE NAME: Coalville Gas Storae

3. ADDRESS OF OPERATOR: P. O. Box 458, Rock Springs, WY 82902

9. WELL NO.: 12

4. LOCATION OF WELL (Report location clearly and in accordance with any State requirements.* See also space 17 below.) At surface: NW SE, 2170' FSL, 1449' FEL

10. FIELD AND POOL, OR WILDCAT: Gas Storage

11. SEC., T., R., M., OR BLK. AND SURVEY OR AREA: 9-2N-5E, SLB&M

14. PERMIT NO.:

15. ELEVATIONS (Show whether DF, RT, GR, etc.): GR 5617'

12. COUNTY OR PARISH: Summit

13. STATE: Utah

16. **Check Appropriate Box To Indicate Nature of Notice, Report, or Other Data**

NOTICE OF INTENTION TO:				SUBSEQUENT REPORT OF:			
TEST WATER SHUT-OFF	☐	PULL OR ALTER CASING	☐	WATER SHUT-OFF	☐	REPAIRING WELL	☐
FRACTURE TREAT	☐	MULTIPLE COMPLETE	☐	FRACTURE TREATMENT	☐	ALTERING CASING	☐
SHOOT OR ACIDIZE	☐	ABANDON*	☐	SHOOTING OR ACIDIZING	☐	ABANDONMENT*	☐
REPAIR WELL	☐	CHANGE PLANS	☐	(Other) Supplemental History			x
(Other)			☐	(NOTE: Report results of multiple completion on Well Completion or Recompletion Report and Log form.)			

17. DESCRIBE PROPOSED OR COMPLETED OPERATIONS (Clearly state all pertinent details, and give pertinent dates, including estimated date of starting any proposed work. If well is directionally drilled, give subsurface locations and measured and true vertical depths for all markers and zones pertinent to this work.)*

SPUDDED December 10, 1983 at 3:00 P.M.

Depth 520', drilling.

RECEIVED
DEC 15 1983
DIVISION OF
OIL, GAS & MINING

18. I hereby certify that the foregoing is true and correct

SIGNED A. J. Maser TITLE Drilling Superintendent DATE 12-14-83

(This space for Federal or State office use)

APPROVED BY _____ TITLE _____ DATE _____

CONDITIONS OF APPROVAL, IF ANY:

*See Instructions on Reverse Side

Form OGCC-1 b

STATE OF UTAH

OIL & GAS CONSERVATION COMMISSION

SUBMIT IN TRIPLICATE* (Other instructions on reverse side)

SUNDRY NOTICES AND REPORTS ON WELLS

(Do not use this form for proposals to drill or to deepen or plug back to a different reservoir. Use "APPLICATION FOR PERMIT—" for such proposals.)

1. OIL WELL ☐ GAS WELL ☐ OTHER Gas Storage - Withdrawal/Injection Well

2. NAME OF OPERATOR: Wexpro Company

3. ADDRESS OF OPERATOR: P. O. Box 458, Rock Springs, WY 82902

4. LOCATION OF WELL (Report location clearly and in accordance with any State requirements.* See also space 17 below.) At surface: NW SE, 2170' FSL, 1449' FEL

RECEIVED JAN 11 1984 DIVISION OF OIL, GAS & MINING

5. LEASE DESIGNATION AND SERIAL NO.: Fee

6. IF INDIAN, ALLOTTEE OR TRIBE NAME: --

7. UNIT AGREEMENT NAME: --

8. FARM OR LEASE NAME: Coalville Gas Storage

9. WELL NO.: 12

10. FIELD AND POOL, OR WILDCAT: Gas Storage

11. SEC., T., R., M., OR BLK. AND SURVEY OR AREA: 9-2N-5E, SLB&M

14. PERMIT NO.: API: 43-043-30249

15. ELEVATIONS (Show whether DF, RT, GR, etc.): GR 5617' KB 5631.60'

12. COUNTY OR PARISH: Summit

13. STATE: Utah

16. **Check Appropriate Box To Indicate Nature of Notice, Report, or Other Data**

NOTICE OF INTENTION TO:				SUBSEQUENT REPORT OF:			
TEST WATER SHUT-OFF	☐	PULL OR ALTER CASING	☐	WATER SHUT-OFF	☐	REPAIRING WELL	☐
FRACTURE TREAT	☐	MULTIPLE COMPLETE	☐	FRACTURE TREATMENT	☐	ALTERING CASING	☐
SHOOT OR ACIDIZE	☐	ABANDON*	☐	SHOOTING OR ACIDIZING	☐	ABANDONMENT*	☐
REPAIR WELL	☐	CHANGE PLANS	☐	(Other) Supplemental History			x
(Other)			☐	(NOTE: Report results of multiple completion on Well Completion or Recompletion Report and Log form.)			

17. DESCRIBE PROPOSED OR COMPLETED OPERATIONS (Clearly state all pertinent details, and give pertinent dates, including estimated date of starting any proposed work. If well is directionally drilled, give subsurface locations and measured and true vertical depths for all markers and zones pertinent to this work.)*

Depth 3060', total depth reached 1-5-84.

Landed 13-3/8" OD, 54.5#, K-55, 8 rd thrd, ST&C casing at 510.60' KBM or 14.60' below KB. The 13-3/8" OD casing flange is 1.00' above ground level. Circulated casing 1/4 hour prior to cementing. Cemented casing using 600 sacks Regular Type G cement treated with 3% Calcium Chloride and 1/4# flocele per sack. Good returns throughout cementing operations. Returned 75 barrels cement slurry to surface. Cement in place @ 6:00 P.M. 12-12-83.

Landed 9-5/8" OD, 36#, K-55, 8 rd thrd, ST&C casing at 1531.99' KBM or 14.60' below KB in a 9-5/8" X 10" 3000 psi casing head which is at ground level. Cemented casing with 730 sacks Regular Type G cement treated with 2% CaCl and 1/4# cello-flakes. Good and full returns for 89 barrels then lost returns until 98 barrels. Full returns for rest of job. Displaced with 116.5 barrels 11.5 mud. Did not bump plug. Returned 44 barrels slurry to surface with a pumping pressure of 500 psi. Cement fell to 24.90' KB and held there. Plug down and cement in place @ 10:30 P.M., 12-23-83.

DST #1: TD 3060', Packers 2812' & 2862', coal zone, check for reservoir gas, IO 10 mins, ISI 20 mins, FO 30 mins, FSI 60 mins, opened weak, declined to very weak in 7 mins, reopened weak, dead in 11 mins, no gas to surface, recovered 30' mud, 11.4 ppg, Res 2.5% @ 68°F, sample chamber 2000 cc mud 104 psig, 11.4 ppg, Res 2.5%, pit mud 11.5 ppg, Res 3.0%, IHP 1742, IOFP's 50-53, ISIP 1741, FOFP's 61-60, FSIP 1738, FHP 1740, BHT 89°F.

18. I hereby certify that the foregoing is true and correct

SIGNED A. J. Maier TITLE Drilling Superintendent DATE 1-9-84

(This space for Federal or State office use)

APPROVED BY _____ TITLE _____ DATE _____

CONDITIONS OF APPROVAL, IF ANY:

*See Instructions on Reverse Side

Form OGC-3

SUBMIT IN DUPLICATE*
(See other instructions on reverse side)

56 64 01

10

STATE OF UTAH
DEPARTMENT OF NATURAL RESOURCES
DIVISION OF OIL, GAS, AND MINING

WELL COMPLETION OR RECOMPLETION REPORT AND LOG*

1a. TYPE OF WELL: OIL WELL ☐ GAS WELL ☐ DRY ☐ Other Gas Storage Withdrawal/Injection

b. TYPE OF COMPLETION: NEW WELL ☒ WORK OVER ☐ DEEP-EN ☐ PLUG BACK ☐ DIFF. RESVR. ☐ Other

2. NAME OF OPERATOR: Wexpro Company

3. ADDRESS OF OPERATOR: P. O. Box 458, Rock Springs, WY 82902

4. LOCATION OF WELL (*Report location clearly and in accordance with any State requirements*)*
At surface NW SE, 2170' FSL, 1449' FEL
At top prod. interval reported below
At total depth

RECEIVED FEB 10 1984
DIVISION OF OIL, GAS & MINING

5. LEASE DESIGNATION AND SERIAL NO.: Fee

6. IF INDIAN, ALLOTTEE OR TRIBE NAME: --

7. UNIT AGREEMENT NAME: --

8. FARM OR LEASE NAME: Coalville Gas Storage

9. WELL NO.: 12

10. FIELD AND POOL, OR WILDCAT: Gas Storage

11. SEC., T., R., M., OR BLOCK AND SURVEY OR AREA: 9-2N-5E, SLB&M

12. COUNTY OR PARISH: Summit

13. STATE: Utah

14. PERMIT NO.: 43-043-30249 DATE ISSUED: 10-22-83

15. DATE SPUDDED: 12-10-83 16. DATE T.D. REACHED: 1-9-84 17. DATE COMPL. (*Ready to prod.*): 1-26-84 18. ELEVATIONS (DF, RKB, RT, GR, ETC.)*: KB 5631.60' GR 5617' 19. ELEV. CASINGHEAD:

20. TOTAL DEPTH, MD & TVD: 3060 21. PLUG, BACK T.D., MD & TVD: 3000 22. IF MULTIPLE COMPL., HOW MANY*: -- 23. INTERVALS DRILLED BY: → ROTARY TOOLS: 0-3060' CABLE TOOLS:

24. PRODUCING INTERVAL(S), OF THIS COMPLETION—TOP, BOTTOM, NAME (MD AND TVD)*: 2890'-2900' - Frontier

25. WAS DIRECTIONAL SURVEY MADE: No

26. TYPE ELECTRIC AND OTHER LOGS RUN: ~~DIL-GR~~, BHC-Sonic-GR, ~~CNL-FDC-GR~~, ~~CBL-GR~~, Fracture Log, Dipmeter

27. WAS WELL CORED: No

28. CASING RECORD (*Report all strings set in well*)

CASING SIZE	WEIGHT, LB./FT.	DEPTH SET (MD)	HOLE SIZE	CEMENTING RECORD	AMOUNT PULLED
13-3/8	54.5	511	17-1/2	600 sx Reg G cmt w/3% CaCl	0
9-5/8	36	1532	12-1/4	730 sx Reg G cmt w/2% CaCl	0
7	20	3048	8-3/4	300 sx 50-50 Pozmix w/2% CaCl & 300 sx H cmt	0

29. LINER RECORD

SIZE	TOP (MD)	BOTTOM (MD)	SACKS CEMENT*	SCREEN (MD)

30. TUBING RECORD

SIZE	DEPTH SET (MD)	PACKER SET (MD)
3-1/2	2813	2806

31. PERFORATION RECORD (*Interval, size and number*): 2890'-2900'

32. ACID, SHOT, FRACTURE, CEMENT SQUEEZE, ETC.

DEPTH INTERVAL (MD)	AMOUNT AND KIND OF MATERIAL USED

33.* PRODUCTION

DATE FIRST PRODUCTION: N/A PRODUCTION METHOD (*Flowing, gas lift, pumping—size and type of pump*): WELL STATUS (*Producing or shut-in*): Shut-in

DATE OF TEST	HOURS TESTED	CHOKE SIZE	PROD'N. FOR TEST PERIOD →	OIL—BBL.	GAS—MCF.	WATER—BBL.	GAS-OIL RATIO
N/A							

FLOW. TUBING PRESS.	CASING PRESSURE	CALCULATED 24-HOUR RATE →	OIL—BBL.	GAS—MCF.	WATER—BBL.	OIL GRAVITY-API. (CORR.)

34. DISPOSITION OF GAS (*Sold, used for fuel, vented, etc.*): TEST WITNESSED BY:

35. LIST OF ATTACHMENTS:

36. I hereby certify that the foregoing and attached information is complete and correct as determined from all available records.

SIGNED Thomas Colson TITLE Director, Petroleum Eng. DATE 2-6-84

*(See Instructions and Spaces for Additional Data on Reverse Side)

INSTRUCTIONS

General: This form is designed for submitting a complete and correct well completion report and log on all types of lands and leases to either a Federal agency or a State agency, or both, pursuant to applicable Federal and/or State laws and regulations. Any necessary special instructions concerning the use of this form and the number of copies to be submitted, particularly with regard to local, area, or regional procedures and practices, either are shown below or will be issued by, or may be obtained from, the local Federal and/or State office. See instructions on items 22 and 24, and 33, below regarding separate reports for separate completions.
If not filed prior to the time this summary record is submitted, copies of all currently available logs (drillers, geologists, sample and core analysis, all types electric, etc.), formation and pressure tests, and directional surveys, should be attached hereto, to the extent required by applicable Federal and/or State laws and regulations. All attachments should be listed on this form, see item 35.
Item 4: If there are no applicable State requirements, locations on Federal or Indian land should be described in accordance with Federal requirements. Consult local State or Federal office for specific instructions.
Item 18: Indicate which elevation is used as reference (where not otherwise shown) for depth measurements given in other spaces on this form and in any attachments.
Items 22 and 24: If this well is completed for separate production from more than one interval zone (multiple completion), so state in item 22, and in item 24 show the producing interval, or intervals, top(s), bottom(s) and name(s) (if any) for only the interval reported in item 33. Submit a separate report (page) on this form, adequately identified, for each additional interval to be separately produced, showing the additional data pertinent to such interval.
Item 29: *"Sacks Cement":* Attached supplemental records for this well should show the details of any multiple stage cementing and the location of the cementing tool.
Item 33: Submit a separate completion report on this form for each interval to be separately produced. (See instruction for items 22 and 24 above.)

37. SUMMARY OF POROUS ZONES:
SHOW ALL IMPORTANT ZONES OF POROSITY AND CONTENTS THEREOF; CORED INTERVALS; AND ALL DRILL-STEM TESTS, INCLUDING DEPTH INTERVAL TESTED, CUSHION USED, TIME TOOL OPEN, FLOWING AND SHUT-IN PRESSURES, AND RECOVERIES

FORMATION	TOP	BOTTOM	DESCRIPTION, CONTENTS, ETC.

38. GEOLOGIC MARKERS

NAME	TOP MEAS. DEPTH	TOP TRUE VERT. DEPTH
Frontier	Surface	
Chalk Creek	1,710	
Spring Creek	2,466	
Ob. Zone	2,654	
Ob. Base	2,684	
Long Wall SS	2,872	
Aspen Shale	2,968	
Kelvin	2,995	

FORM 9

STATE OF UTAH
DEPARTMENT OF NATURAL RESOURCES
DIVISION OF OIL, GAS AND MINING

SUNDRY NOTICES AND REPORTS ON WELLS

Do not use this form for proposals to drill new wells, significantly deepen existing wells below current bottom-hole depth, reenter plugged wells, or to drill horizontal laterals. Use APPLICATION FOR PERMIT TO DRILL form for such proposals.

5. LEASE DESIGNATION AND SERIAL NUMBER: Fee
6. IF INDIAN, ALLOTTEE OR TRIBE NAME: N/A
7. UNIT or CA AGREEMENT NAME: Coalville Gas Storage
8. WELL NAME and NUMBER: Coalville 12
9. API NUMBER: 4304330249
10. FIELD AND POOL, OR WILDCAT: Coalville Gas Storage

1. TYPE OF WELL: OIL WELL ☐ GAS WELL ☐ OTHER Gas Storage/Inject. Withdrawal

2. NAME OF OPERATOR: Questar Pipeline Company

3. ADDRESS OF OPERATOR: P.O. Box 45360 CITY SLC STATE UT ZIP 84145-0360 PHONE NUMBER: (801) 324-5555

4. LOCATION OF WELL
FOOTAGES AT SURFACE: 1449' FEL, 2170' FSL COUNTY: Summit
QTR/QTR, SECTION, TOWNSHIP, RANGE, MERIDIAN: NE SE 9 2N 5E SLM STATE: UTAH

11. CHECK APPROPRIATE BOXES TO INDICATE NATURE OF NOTICE, REPORT, OR OTHER DATA

TYPE OF SUBMISSION	TYPE OF ACTION		
☐ NOTICE OF INTENT (Submit in Duplicate)	☐ ACIDIZE	☐ DEEPEN	☐ REPERFORATE CURRENT FORMATION
Approximate date work will start:	☐ ALTER CASING	☐ FRACTURE TREAT	☐ SIDETRACK TO REPAIR WELL
	☐ CASING REPAIR	☐ NEW CONSTRUCTION	☐ TEMPORARILY ABANDON
	☐ CHANGE TO PREVIOUS PLANS	☐ OPERATOR CHANGE	☐ TUBING REPAIR
	☐ CHANGE TUBING	☐ PLUG AND ABANDON	☐ VENT OR FLARE
☐ SUBSEQUENT REPORT (Submit Original Form Only)	☐ CHANGE WELL NAME	☐ PLUG BACK	☐ WATER DISPOSAL
Date of work completion:	☐ CHANGE WELL STATUS	☐ PRODUCTION (START/RESUME)	☐ WATER SHUT-OFF
	☐ COMMINGLE PRODUCING FORMATIONS	☐ RECLAMATION OF WELL SITE	☑ OTHER: Name Change
	☐ CONVERT WELL TYPE	☐ RECOMPLETE - DIFFERENT FORMATION	

12. DESCRIBE PROPOSED OR COMPLETED OPERATIONS. Clearly show all pertinent details including dates, depths, volumes, etc.

Purpose is to inform of the change in name on the subject leases from ~~Mountain Fuel Supply Company~~ Wexpro Company to Questar Pipeline Company.

Effective 3/7/1988

Approved:
Property
Property
Engineer
Legal
V.P.

NAME (PLEASE PRINT) R. J. Zobell TITLE Manager, Engineering & Project Management

SIGNATURE R. Zobell DATE

(This space for State use only)

RECEIVED
JAN 13 2004
DIV. OF OIL, GAS & MINING

(5/2000) (See Instructions on Reverse Side)

Division of Oil, Gas and Mining

OPERATOR CHANGE WORKSHEET

ROUTING
1. GLH
2. CDW
3. FILE

Change of Operator (Well Sold) — Designation of Agent/Operator

X Operator Name Change — Merger

The operator of the well(s) listed below has changed, effective: **3/7/1988**

FROM: (Old Operator):	**TO:** (New Operator):
N1070-Wexpro Company PO Box 45360 Salt Lake City, UT 84145-0360 Phone: 1-(801) 534-5267	N7560-Questar Pipeline Company PO Box 11450 Salt Lake City, UT 84147 Phone: 1-(801) 530-2019

CA No. **Unit:**

WELL(S)

NAME	SEC	TWN	RNG	API NO	ENTITY NO	LEASE TYPE	WELL TYPE	WELL STATUS
COALVILLE GAS STORAGE 8	10	020N	050E	4304330192	99990	Fee	GS	A
COALVILLE GAS STORAGE 9	10	020N	050E	4304330193	99990	Fee	GS	A
COALVILLE GAS STORAGE 10	10	020N	050E	4304330244	99990	Fee	GS	A
COALVILLE GAS STORAGE 12	09	020N	050E	4304330249	99990	Fee	GS	A
CLAY BASIN UNIT 5	20	030N	240E	4300915629	1025	Fee	GS	A
CLAY BASIN UNIT 3	16	030N	240E	4300915627	1025	State	GS	A
CLAY BASIN UNIT 27-S	16	030N	240E	4300930018	1025	State	GS	A
CLAY BASIN UNIT 52-S	16	030N	240E	4300930048	1025	State	GS	A
CLAY BASIN UNIT 53-S	16	030N	240E	4300930049	1025	State	GS	A
CLAY BASIN UNIT 59-S	16	030N	240E	4300930055	1025	State	GS	A
CLAY BASIN UNIT 35-S	17	030N	240E	4300930026	1025	Federal	GS	A
CLAY BASIN UNIT 40-S	20	030N	240E	4300930031	1025	Federal	GS	A
CLAY BASIN UNIT 49-S	20	030N	240E	4300930045	1025	Federal	GS	A
CLAY BASIN UNIT 2	21	030N	240E	4300915626	1025	Federal	GS	A
CLAY BASIN 24-S	21	030N	240E	4300930015	1025	Federal	GS	A
CLAY BASIN UNIT 25-S	21	030N	240E	4300930016	1025	Federal	GS	A
CLAY BASIN UNIT 26-S	21	030N	240E	4300930017	1025	Federal	GS	A
CLAY BASIN 30-S	21	030N	240E	4300930019	1025	Federal	GS	A
CLAY BASIN UNIT 33-S	21	030N	240E	4300930024	1025	Federal	GS	A

OPERATOR CHANGES DOCUMENTATION

Enter date after each listed item is completed

1. (R649-8-10) Sundry or legal documentation was received from the **FORMER** operator on: 1/13/2004
2. (R649-8-10) Sundry or legal documentation was received from the **NEW** operator on: 1/13/2004
3. The new company was checked on the **Department of Commerce, Division of Corporations Database on:** 1/14/2004
4. Is the new operator registered in the State of Utah: YES Business Number: 649172-0142
5. If **NO**, the operator was contacted contacted on: _____

6. (R649-9-2)Waste Management Plan has been received on: IN PLACE

7. **Federal and Indian Lease Wells:** The BLM and or the BIA has approved the merger, name change, or operator change for all wells listed on Federal or Indian leases on: 3/9/1989

8. **Federal and Indian Units:**
The BLM or BIA has approved the successor of unit operator for wells listed on: n/a

9. **Federal and Indian Communization Agreements ("CA"):**
The BLM or BIA has approved the operator for all wells listed within a CA on: n/a

10. **Underground Injection Control ("UIC"** The Division has approved UIC Form 5, **Transfer of Authority to Inject,** for the enhanced/secondary recovery unit/project for the water disposal well(s) listed on: N/A

DATA ENTRY:

1. Changes entered in the **Oil and Gas Database on:** 1/29/2004
2. Changes have been entered on the **Monthly Operator Change Spread Sheet on:** 1/29/2004
3. Bond information entered in RBDMS on: 1/29/2004
4. Fee wells attached to bond in RBDMS on: 1/29/2004
5. Injection Projects to new operator in RBDMS on: n/a

STATE WELL(S) BOND VERIFICATION:

1. State well(s) covered by Bond Number: 965003032

FEDERAL WELL(S) BOND VERIFICATION:

1. Federal well(s) covered by Bond Number: 965002976

INDIAN WELL(S) BOND VERIFICATION:

1. Indian well(s) covered by Bond Number: n/a

FEE WELL(S) BOND VERIFICATION:

1. (R649-3-1) The **NEW** operator of any fee well(s) listed covered by Bond Number 965003033

2. The **FORMER** operator has requested a release of liability from their bond on: N/A
The Division sent response by letter on: N/A

LEASE INTEREST OWNER NOTIFICATION:

3. (R649-2-10) The **FORMER** operator of the fee wells has been contacted and informed by a letter from the Division of their responsibility to notify all interest owners of this change on: 1/29/2004

COMMENTS:

NEW ENTITY NUMBERS ASSIGNED FEBRUARY 2004

ACCT	OPERATOR NAME	API NUM.	Sec	Twnshp	Rng	WELL NAME	ENTITY	EFF DATE	REASON
N7560	Questar Pipeline Co	4304310691	09	020N	050E	Coalville Gas Storage 1	99990 to 14038	2/10/2004	Coalville Gas Storage
N7560	Questar Pipeline Co	4304330005	10	020N	050E	Coalville Gas Storage 2	99990 to 14038	2/10/2004	Coalville Gas Storage
N7560	Questar Pipeline Co	4304330007	10	020N	050E	Coalville Gas Storage 3	99990 to 14038	2/10/2004	Coalville Gas Storage
N7560	Questar Pipeline Co	4304330009	10	020N	050E	Coalville Gas Storage 4	99990 to 14038	2/10/2004	Coalville Gas Storage
N7560	Questar Pipeline Co	4304330011	10	020N	050E	Coalville Gas Storage 5	99990 to 14038	2/10/2004	Coalville Gas Storage
N7560	Questar Pipeline Co	4304330020	10	020N	050E	Coalville Gas Storage 6	99990 to 14038	2/10/2004	Coalville Gas Storage
N7560	Questar Pipeline Co	4304330021	10	020N	050E	Coalville Gas Storage 7	99990 to 14038	2/10/2004	Coalville Gas Storage
N7560	Questar Pipeline Co	4304330192	10	020N	050E	Coalville Gas Storage 8	99990 to 14038	2/10/2004	Coalville Gas Storage
N7560	Questar Pipeline Co	4304330193	10	020N	050E	Coalville Gas Storage 9	99990 to 14038	2/10/2004	Coalville Gas Storage
N7560	Questar Pipeline Co	4304330244	10	020N	050E	Coalville Gas Storage 10	99990 to 14038	2/10/2004	Coalville Gas Storage
N7560	Questar Pipeline Co	4304330249	09	020N	050E	Coalville Gas Storage 12	99990 to 14038	2/10/2004	Coalville Gas Storage

Note to file: These entity numbers were changed to compliment the operator correction from 3/7/98

DIPLOG

Company WEXPRO COMPANY 4S

Well COALVILLE NO. 12 2N 5E Sec 9

Field COALVILLE GAS STORAGE **Date** 1-10-84

County SUMMIT **State** UTAH

43-043-30249

WEXPRO COMPANY
COALVILLE NO. 12
COALVILLE GAS STORAGE
SUMMIT UTAH
12-23-83

DIP325

INTERVAL 500.0 TO 1600.0
RUN 1 RLAC 325.
ENGINEER RALL MAG DEC 15.

```
*************************************************
*  SEARCH 12 IN  WINDOW 8' STEP 2'              *
*                                               *
*     4    0    0    0    0                     *
*************************************************
```

DEPTH	WL	**FORMATION DIP** ANG	AZ	BEARING	GRADE	****BOREHOLE***** DA	DAZ	BEARING
532.0	8.00	22.5	316	N 44 W	100	1.6	122	S 58 E
534.0	8.00	22.1	312	N 48 W	100	1.3	117	S 63 E
536.0	8.00	21.8	310	N 50 W	100	1.3	114	S 66 E
538.0	8.00	22.0	309	N 51 W	100	1.4	113	S 67 E
540.0	8.00	22.2	310	N 50 W	70	1.4	109	S 71 E
542.0	8.00	22.5	312	N 48 W	93	1.4	111	S 69 E
544.0	8.00	22.7	311	N 49 W	100	1.5	109	S 71 E
546.0	8.00	18.3	301	N 59 W	100	1.6	108	S 72 E
548.0	8.00	20.5	300	N 60 W	100	1.4	107	S 73 E
550.0	8.00	17.8	300	N 60 W	97	1.3	111	S 69 E
552.0	8.00	17.4	307	N 53 W	100	1.2	113	S 67 E
554.0	8.00	22.2	301	N 59 W	93	1.3	111	S 69 E
556.0	8.00	13.9	301	N 59 W	100	1.3	110	S 70 E
562.0	8.00	12.9	301	N 59 W	86	1.3	107	S 73 E
564.0	8.00	16.9	298	N 62 W	82	1.3	103	S 77 E
566.0	8.00	14.2	296	N 64 W	79	1.5	101	S 79 E
570.0	8.00	24.1	313	N 47 W	82	1.3	97	S 83 E
572.0	8.00	15.6	323	N 37 W	63	1.2	102	S 78 E
574.0	8.00	22.8	292	N 68 W	46	1.3	102	S 78 E
576.0	8.00	25.7	332	N 28 W	60	1.4	96	S 84 E
578.0	8.00	16.9	346	N 14 W	80	1.6	94	S 86 E
580.0	8.00	25.6	306	N 54 W	100	1.2	93	S 87 E
582.0	8.00	24.5	302	N 58 W	97	1.1	92	S 88 E
584.0	8.00	28.9	304	N 56 W	100	1.1	91	S 89 E
586.0	8.00	20.3	305	N 55 W	100	1.2	89	N 89 E
588.0	8.00	20.2	304	N 56 W	71	1.3	88	N 88 E
590.0	8.00	19.9	300	N 60 W	100	1.5	84	N 84 E
592.0	8.00	12.1	294	N 66 W	60	1.5	83	N 83 E
594.0	8.00	8.7	310	N 50 W	70	1.7	87	N 87 E

WEXPRO COMPANY
COALVILLE NO. 12
COALVILLE GAS STORAGE
SUMMIT
12-23-83

DIP325

UTAH

DEPTH	WI.	**FORMATION DIP** ANG	AZ	BEARING	GRADE	*****BOREHOLE***** DA	DAZ	BEARING
598.0	8.00	16.7	299	N 61 W	24	1.2	83	N 83 E
604.0	8.00	25.4	299	N 61 W	65	1.2	75	N 75 E
606.0	8.00	23.8	302	N 58 W	85	1.2	74	N 74 E
608.0	8.00	23.7	308	N 52 W	88	1.1	73	N 73 E
610.0	8.00	22.2	306	N 54 W	100	1.1	73	N 73 E
612.0	8.00	22.2	304	N 56 W	68	1.2	72	N 72 E
614.0	8.00	23.4	309	N 51 W	71	1.3	86	N 86 E
616.0	8.00	16.8	303	N 57 W	64	1.4	84	N 84 E
618.0	8.00	10.0	273	N 87 W	62	1.4	81	N 81 E
620.0	8.00	23.4	294	N 66 W	87	1.4	84	N 84 E
622.0	8.00	20.5	303	N 57 W	94	1.4	85	N 85 E
624.0	8.00	20.2	305	N 55 W	100	1.3	86	N 86 E
626.0	8.00	22.6	302	N 58 W	100	1.2	85	N 85 E
628.0	8.00	20.8	329	N 31 W	72	1.1	85	N 85 E
630.0	8.00	29.1	285	N 75 W	72	1.2	86	N 86 E
634.0	8.00	20.0	312	N 48 W	92	1.5	89	N 89 E
636.0	8.00	21.5	287	N 73 W	63	1.6	92	S 88 E
640.0	8.00	17.4	324	N 36 W	52	1.7	90	N 90 E
642.0	8.00	15.6	238	S 58 W	43	1.7	90	N 90 E
644.0	8.00	20.3	234	S 54 W	45	1.7	91	S 89 E
646.0	8.00	18.4	301	N 59 W	80	1.7	93	S 87 E
648.0	8.00	18.3	303	N 57 W	89	1.7	95	S 85 E
650.0	8.00	18.3	303	N 57 W	97	1.7	98	S 82 E
652.0	8.00	16.7	297	N 63 W	100	1.8	98	S 82 E
654.0	8.00	16.3	253	S 73 W	79	1.8	101	S 79 E
658.0	8.00	12.3	287	N 73 W	40	1.8	102	S 78 E
660.0	8.00	24.8	298	N 62 W	50	1.8	103	S 77 E
662.0	8.00	22.1	298	N 62 W	91	1.9	103	S 77 E
664.0	8.00	24.9	298	N 62 W	86	1.9	103	S 77 E
666.0	8.00	22.2	290	N 70 W	56	2.0	103	S 77 E
672.0	8.00	25.3	294	N 66 W	100	1.9	100	S 80 E
676.0	8.00	30.6	293	N 67 W	62	2.0	97	S 83 E
678.0	8.00	31.4	284	N 76 W	74	2.0	99	S 81 E
680.0	8.00	18.4	296	N 64 W	45	1.9	95	S 85 E
682.0	8.00	19.0	312	N 48 W	75	1.9	96	S 84 E
684.0	8.00	28.8	338	N 22 W	34	1.8	96	S 84 E
686.0	8.00	30.8	301	N 59 W	63	1.8	95	S 85 E
692.0	8.00	20.7	287	N 73 W	71	1.6	95	S 85 E
694.0	8.00	20.6	302	N 58 W	100	1.6	98	S 82 E
696.0	8.00	20.5	300	N 60 W	90	1.5	98	S 82 E

WEXPRO COMPANY DIP325
COALVILLE NO. 12
COALVILLE GAS STORAGE
SUMMIT UTAH
12-23-83

DEPTH	WT.	**FORMATION DIP** ANG	AZ	BEARING	GRADE	****BOREHOLE***** DA	DAZ	BEARING
698.0	8.00	21.2	297	N 63 W	100	1.5	98	S 82 E
700.0	8.00	26.0	303	N 57 W	100	1.5	97	S 83 E
702.0	8.00	22.1	301	N 59 W	100	1.5	97	S 83 E
704.0	8.00	23.2	303	N 57 W	88	1.6	98	S 82 E
706.0	8.00	19.4	291	N 69 W	82	1.7	97	S 83 E
708.0	8.00	24.3	279	N 81 W	60	1.6	97	S 83 E
710.0	8.00	22.9	307	N 53 W	100	1.7	94	S 86 E
712.0	8.00	20.7	304	N 56 W	100	1.6	94	S 86 E
714.0	8.00	20.6	303	N 57 W	100	1.7	94	S 86 E
716.0	8.00	20.5	302	N 58 W	100	1.7	94	S 86 E
718.0	8.00	20.9	302	N 58 W	100	1.7	94	S 86 E
720.0	8.00	18.3	298	N 62 W	100	1.7	93	S 87 E
722.0	8.00	17.2	303	N 57 W	100	1.7	96	S 84 E
724.0	8.00	19.6	294	N 66 W	100	1.8	86	N 86 E
726.0	8.00	21.9	291	N 69 W	92	1.8	92	S 88 E
728.0	8.00	18.0	288	N 72 W	98	1.8	96	S 84 E
730.0	8.00	17.9	288	N 72 W	66	1.8	96	S 84 E
732.0	8.00	17.9	296	N 64 W	27	1.8	97	S 83 E
736.0	8.00	21.0	308	N 52 W	62	1.8	98	S 82 E
738.0	8.00	20.8	307	N 53 W	75	1.8	99	S 81 E
740.0	8.00	21.3	310	N 50 W	77	1.9	99	S 81 E
742.0	8.00	30.0	302	N 58 W	56	1.9	99	S 81 E
748.0	8.00	24.9	296	N 64 W	89	1.6	98	S 82 E
750.0	8.00	23.0	296	N 64 W	86	1.7	97	S 83 E
752.0	8.00	24.5	297	N 63 W	76	1.7	99	S 81 E
754.0	8.00	20.7	295	N 65 W	95	1.7	92	S 88 E
756.0	8.00	19.1	298	N 62 W	75	1.7	93	S 87 E
758.0	8.00	20.6	300	N 60 W	90	1.8	95	S 85 E
760.0	8.00	21.6	292	N 68 W	100	1.8	97	S 83 E
762.0	8.00	20.3	295	N 65 W	100	1.9	97	S 83 E
764.0	8.00	18.5	297	N 63 W	100	1.9	100	S 80 E
766.0	8.00	16.7	294	N 66 W	87	2.1	100	S 80 E
770.0	8.00	17.9	306	N 54 W	48	1.9	100	S 80 E
772.0	8.00	12.3	339	N 21 W	36	2.0	107	S 73 E
774.0	8.00	13.3	336	N 24 W	42	2.1	106	S 74 E
776.0	8.00	25.3	302	N 58 W	33	1.7	109	S 71 E
778.0	8.00	23.8	311	N 49 W	100	1.8	107	S 73 E
780.0	8.00	21.7	306	N 54 W	69	1.8	106	S 74 E
782.0	8.00	21.6	306	N 54 W	100	1.9	106	S 74 E
784.0	8.00	20.8	297	N 63 W	100	1.9	105	S 75 E

WEXPRO COMPANY DIP325
COALVILLE NO. 12
COALVILLE GAS STORAGE
SUMMIT UTAH
12-23-83

DEPTH	WL.	**FORMATION DIP** ANG	AZ	BEARING	GRADE	****BOREHOLE***** DA	DAZ	BEARING
786.0	8.00	21.9	301	N 59 W	81	1.9	106	S 74 E
788.0	8.00	21.9	302	N 58 W	100	1.9	106	S 74 E
790.0	8.00	22.2	301	N 59 W	100	1.9	108	S 72 E
792.0	8.00	22.4	297	N 63 W	100	2.0	107	S 73 E
794.0	8.00	22.1	297	N 63 W	86	2.0	107	S 73 E
796.0	8.00	23.9	284	N 76 W	40	2.1	107	S 73 E
800.0	8.00	18.0	155	S 25 E	56	2.2	108	S 72 E
812.0	8.00	24.6	290	N 70 W	91	2.1	107	S 73 E
814.0	8.00	25.2	288	N 72 W	100	2.0	107	S 73 E
816.0	8.00	24.3	296	N 64 W	99	2.1	107	S 73 E
818.0	8.00	22.0	298	N 62 W	100	2.1	107	S 73 E
820.0	8.00	22.0	300	N 60 W	100	2.2	108	S 72 E
822.0	8.00	26.5	316	N 44 W	68	2.2	108	S 72 E
826.0	8.00	18.0	277	N 83 W	15	2.2	107	S 73 E
828.0	8.00	25.7	297	N 63 W	39	2.2	105	S 75 E
830.0	8.00	24.9	295	N 65 W	93	2.2	111	S 69 E
832.0	8.00	28.1	294	N 66 W	89	2.1	109	S 71 E
834.0	8.00	20.6	303	N 57 W	73	2.1	114	S 66 E
836.0	8.00	21.7	297	N 63 W	100	2.1	113	S 67 E
838.0	8.00	17.1	288	N 72 W	87	2.1	113	S 67 E
840.0	8.00	15.7	288	N 72 W	77	2.2	114	S 66 E
842.0	8.00	24.2	293	N 67 W	39	2.3	111	S 69 E
844.0	8.00	18.4	318	N 42 W	14	2.3	107	S 73 E
846.0	8.00	7.8	352	N 8 W	57	2.2	108	S 72 E
848.0	8.00	8.7	355	N 5 W	47	2.2	112	S 68 E
850.0	8.00	19.4	300	N 60 W	71	2.1	107	S 73 E
852.0	8.00	19.1	306	N 54 W	57	2.1	108	S 72 E
862.0	8.00	14.4	323	N 37 W	71	2.2	111	S 69 E
864.0	8.00	21.1	334	N 26 W	67	2.2	114	S 66 E
866.0	8.00	19.6	340	N 20 W	37	2.2	113	S 67 E
868.0	8.00	16.6	294	N 66 W	85	2.2	112	S 68 E
870.0	8.00	19.6	226	S 46 W	91	2.2	113	S 67 E
872.0	8.00	16.6	253	S 73 W	88	2.3	113	S 67 E
874.0	8.00	14.5	265	S 85 W	91	2.3	113	S 67 E
886.0	8.00	23.1	308	N 52 W	70	2.1	113	S 67 E
888.0	8.00	18.9	288	N 72 W	80	2.2	114	S 66 E
890.0	8.00	18.6	289	N 71 W	100	2.2	113	S 67 E
892.0	8.00	17.8	291	N 69 W	97	2.1	113	S 67 E
894.0	8.00	18.5	299	N 61 W	100	2.2	114	S 66 E
896.0	8.00	19.7	308	N 52 W	85	2.1	114	S 66 E

WEXPRO COMPANY
COALVILLE NO. 12
COALVILLE GAS STORAGE
SUMMIT
12-23-83

DIP325

UTAH

DEPTH	WL.	**FORMATION DIP** ANG	AZ	BEARING	GRADE	****BOREHOLE***** DA	DAZ	BEARING
898.0	8.00	19.1	301	N 59 W	94	2.1	115	S 65 E
900.0	8.00	23.4	306	N 54 W	100	2.1	117	S 63 E
902.0	8.00	15.1	277	N 83 W	100	2.1	117	S 63 E
904.0	8.00	15.2	273	N 87 W	85	2.1	115	S 65 E
906.0	8.00	29.7	282	N 78 W	100	2.1	114	S 66 E
908.0	8.00	16.9	322	N 38 W	77	2.0	113	S 67 E
910.0	8.00	15.2	307	N 53 W	100	2.1	111	S 69 E
912.0	8.00	15.2	307	N 53 W	97	2.1	112	S 68 E
914.0	8.00	14.4	307	N 53 W	86	2.1	111	S 69 E
916.0	8.00	9.6	326	N 34 W	83	2.1	108	S 72 E
924.0	8.00	9.9	324	N 36 W	60	2.1	104	S 76 E
928.0	8.00	17.1	325	N 35 W	28	2.1	103	S 77 E
930.0	8.00	17.8	259	S 79 W	57	2.1	107	S 73 E
932.0	8.00	16.5	287	N 73 W	93	2.1	103	S 77 E
934.0	8.00	18.8	293	N 67 W	100	2.1	99	S 81 E
936.0	8.00	17.1	304	N 56 W	100	2.1	103	S 77 E
938.0	8.00	15.7	297	N 63 W	100	2.1	103	S 77 E
940.0	8.00	19.7	300	N 60 W	100	2.2	102	S 78 E
942.0	8.00	19.5	325	N 35 W	71	2.2	103	S 77 E
944.0	8.00	23.5	301	N 59 W	100	2.3	104	S 76 E
946.0	8.00	23.2	301	N 59 W	99	2.3	103	S 77 E
948.0	8.00	22.9	299	N 61 W	80	2.2	101	S 79 E
950.0	8.00	25.5	297	N 63 W	39	2.2	103	S 77 E
952.0	8.00	26.7	289	N 71 W	41	2.3	103	S 77 E
954.0	8.00	14.6	288	N 72 W	76	2.4	106	S 74 E
956.0	8.00	16.9	307	N 53 W	54	2.4	106	S 74 E
960.0	8.00	22.7	310	N 50 W	81	2.4	107	S 73 E
962.0	8.00	21.5	304	N 56 W	100	2.4	106	S 74 E
964.0	8.00	24.7	304	N 56 W	60	2.4	106	S 74 E
966.0	8.00	30.7	274	N 86 W	56	2.4	106	S 74 E
968.0	8.00	30.5	279	N 81 W	83	2.4	108	S 72 E
970.0	8.00	27.9	278	N 82 W	77	2.4	104	S 76 E
972.0	8.00	32.7	295	N 65 W	100	2.3	108	S 72 E
974.0	8.00	21.2	299	N 61 W	76	2.3	110	S 70 E
976.0	8.00	32.9	308	N 52 W	56	2.3	109	S 71 E
978.0	8.00	13.2	310	N 50 W	84	2.3	109	S 71 E
980.0	8.00	23.2	310	N 50 W	53	2.3	108	S 72 E
982.0	8.00	16.7	293	N 67 W	100	2.3	109	S 71 E
984.0	8.00	8.6	269	S 89 W	97	2.3	112	S 68 E
986.0	8.00	22.9	278	N 82 W	48	2.2	110	S 70 E

WEXPRO COMPANY DIP325
COALVILLE NO. 12
COALVILLE GAS STORAGE
SUMMIT UTAH
12-23-83

DEPTH	WL	**FORMATION DIP** ANG	AZ	BEARING	GRADE	****BOREHOLE***** DA	DAZ	BEARING
988.0	8.00	32.5	300	N 60 W	25	2.2	112	S 68 E
990.0	8.00	32.6	306	N 54 W	16	2.1	114	S 66 E
992.0	8.00	13.0	272	N 88 W	44	2.2	112	S 68 E
994.0	8.00	20.8	329	N 31 W	68	2.2	110	S 70 E
996.0	8.00	20.3	307	N 53 W	73	2.1	106	S 74 E
998.0	8.00	20.2	305	N 55 W	77	2.1	107	S 73 E
1000.0	8.00	13.9	353	N 7 W	100	2.1	108	S 72 E
1002.0	8.00	15.4	320	N 40 W	100	2.2	106	S 74 E
1004.0	8.00	28.2	296	N 64 W	100	2.2	103	S 77 E
1006.0	8.00	27.0	295	N 65 W	100	2.3	102	S 78 E
1008.0	8.00	24.8	290	N 70 W	100	2.3	100	S 80 E
1010.0	8.00	14.7	289	N 71 W	82	2.3	102	S 78 E
1012.0	8.00	12.1	279	N 81 W	100	2.3	101	S 79 E
1014.0	8.00	14.5	281	N 79 W	100	2.4	102	S 78 E
1016.0	8.00	29.9	289	N 71 W	99	2.4	102	S 78 E
1018.0	8.00	16.4	285	N 75 W	100	2.4	102	S 78 E
1020.0	8.00	19.1	293	N 67 W	71	2.4	101	S 79 E
1022.0	8.00	24.1	291	N 69 W	100	2.4	104	S 76 E
1024.0	8.00	24.2	292	N 68 W	100	2.3	104	S 76 E
1026.0	8.00	24.1	292	N 68 W	100	2.2	105	S 75 E
1028.0	8.00	25.8	302	N 58 W	100	2.2	107	S 73 E
1030.0	8.00	25.7	298	N 62 W	100	2.1	109	S 71 E
1032.0	8.00	18.7	254	S 74 W	92	2.2	107	S 73 E
1034.0	8.00	14.9	318	N 42 W	100	2.2	103	S 77 E
1036.0	8.00	13.5	254	S 74 W	97	2.2	107	S 73 E
1038.0	8.00	23.5	302	N 58 W	72	2.1	105	S 75 E
1040.0	8.00	10.9	328	N 32 W	100	2.1	104	S 76 E
1042.0	8.00	11.0	323	N 37 W	100	2.1	105	S 75 E
1044.0	8.00	16.3	307	N 53 W	82	2.2	105	S 75 E
1046.0	8.00	16.5	309	N 51 W	60	2.2	105	S 75 E
1048.0	8.00	23.1	299	N 61 W	68	2.2	104	S 76 E
1050.0	8.00	23.5	301	N 59 W	72	2.2	106	S 74 E
1052.0	8.00	25.9	290	N 70 W	62	2.2	106	S 74 E
1054.0	8.00	21.6	323	N 37 W	64	2.1	105	S 75 E
1056.0	8.00	7.5	316	N 44 W	100	2.1	108	S 72 E
1058.0	8.00	7.5	313	N 47 W	100	2.2	107	S 73 E
1060.0	8.00	14.2	318	N 42 W	100	2.1	106	S 74 E
1062.0	8.00	13.5	296	N 64 W	100	2.0	106	S 74 E
1064.0	8.00	19.7	290	N 70 W	89	2.0	106	S 74 E
1066.0	8.00	21.0	300	N 60 W	88	2.1	103	S 77 E

WEXPRO COMPANY DIP325
COALVILLE NO. 12
COALVILLE GAS STORAGE
SUMMIT UTAH
12-23-83

DEPTH	WT.	**FORMATION DIP** ANG	AZ	BEARING	GRADE	****BOREHOLE***** DA	DAZ	BEARING
1068.0	8.00	19.2	296	N 64 W	71	2.1	105	S 75 E
1070.0	8.00	18.4	308	N 52 W	80	2.0	96	S 84 E
1072.0	8.00	22.5	305	N 55 W	74	2.0	107	S 73 E
1074.0	8.00	21.7	321	N 39 W	91	2.0	108	S 72 E
1076.0	8.00	22.4	306	N 54 W	100	2.0	105	S 75 E
1078.0	8.00	22.4	308	N 52 W	100	2.0	106	S 74 E
1080.0	8.00	24.1	299	N 61 W	96	2.1	107	S 73 E
1082.0	8.00	26.0	292	N 68 W	100	2.0	108	S 72 E
1084.0	8.00	23.4	300	N 60 W	59	2.0	109	S 71 E
1086.0	8.00	21.2	296	N 64 W	63	2.0	109	S 71 E
1088.0	8.00	20.8	294	N 66 W	63	1.9	109	S 71 E
1092.0	8.00	22.2	257	S 77 W	15	1.9	110	S 70 E
1094.0	8.00	24.3	244	S 64 W	20	1.9	110	S 70 E
1096.0	8.00	26.9	293	N 67 W	45	1.9	108	S 72 E
1098.0	8.00	21.3	327	N 33 W	38	1.9	108	S 72 E
1100.0	8.00	21.4	328	N 32 W	59	1.9	111	S 69 E
1102.0	8.00	22.6	314	N 46 W	65	2.0	110	S 70 E
1104.0	8.00	22.9	315	N 45 W	65	2.0	111	S 69 E
1106.0	8.00	22.2	313	N 47 W	100	2.0	110	S 70 E
1108.0	8.00	21.2	303	N 57 W	100	2.1	109	S 71 E
1110.0	8.00	18.4	302	N 58 W	100	2.1	112	S 68 E
1112.0	8.00	18.8	303	N 57 W	100	2.1	113	S 67 E
1114.0	8.00	15.8	332	N 28 W	100	2.1	113	S 67 E
1116.0	8.00	25.5	303	N 57 W	78	2.1	111	S 69 E
1118.0	8.00	25.5	290	N 70 W	96	2.1	115	S 65 E
1120.0	8.00	25.5	296	N 64 W	100	2.1	112	S 68 E
1122.0	8.00	20.5	295	N 65 W	100	2.1	117	S 63 E
1124.0	8.00	21.5	288	N 72 W	100	2.0	120	S 60 E
1126.0	8.00	20.6	302	N 58 W	100	2.0	120	S 60 E
1128.0	8.00	25.8	304	N 56 W	100	2.0	122	S 58 E
1130.0	8.00	22.8	310	N 50 W	100	2.0	111	S 69 E
1132.0	8.00	22.4	313	N 47 W	67	1.9	113	S 67 E
1134.0	8.00	17.1	306	N 54 W	38	1.9	114	S 66 E
1136.0	8.00	26.6	323	N 37 W	41	1.9	115	S 65 E
1138.0	8.00	17.7	324	N 36 W	73	1.9	117	S 63 E
1140.0	8.00	18.0	304	N 56 W	91	1.9	110	S 70 E
1142.0	8.00	20.9	298	N 62 W	100	2.0	115	S 65 E
1144.0	8.00	18.6	299	N 61 W	100	2.0	120	S 60 E
1146.0	8.00	19.7	294	N 66 W	100	2.2	118	S 62 E
1148.0	8.00	20.7	286	N 74 W	100	2.0	116	S 64 E

WEXPRO COMPANY DIP325
COALVILLE NO. 12
COALVILLE GAS STORAGE
SUMMIT UTAH
12-23-83

DEPTH	WL	**FORMATION DIP** ANG	AZ	BEARING	GRADE	****BOREHOLE***** DA	DAZ	BEARING
1150.0	8.00	23.0	278	N 82 W	76	2.0	111	S 69 E
1152.0	8.00	21.9	299	N 61 W	100	2.0	112	S 68 E
1154.0	8.00	19.6	293	N 67 W	100	2.0	110	S 70 E
1156.0	8.00	22.6	305	N 55 W	100	2.2	110	S 70 E
1158.0	8.00	21.5	303	N 57 W	100	2.3	106	S 74 E
1160.0	8.00	20.9	301	N 59 W	100	2.2	107	S 73 E
1162.0	8.00	22.6	304	N 56 W	78	2.0	107	S 73 E
1164.0	8.00	23.6	299	N 61 W	100	2.0	107	S 73 E
1166.0	8.00	25.2	318	N 42 W	72	2.0	108	S 72 E
1168.0	8.00	25.1	324	N 36 W	63	2.0	109	S 71 E
1170.0	8.00	22.9	307	N 53 W	67	2.0	111	S 69 E
1172.0	8.00	7.8	32	N 32 E	95	2.1	112	S 68 E
1176.0	8.00	11.8	301	N 59 W	59	2.1	113	S 67 E
1178.0	8.00	17.2	269	S 89 W	62	2.1	113	S 67 E
1180.0	8.00	17.8	287	N 73 W	62	2.1	109	S 71 E
1182.0	8.00	18.1	291	N 69 W	49	2.1	110	S 70 E
1184.0	8.00	24.9	273	N 87 W	78	2.1	110	S 70 E
1186.0	8.00	19.2	303	N 57 W	46	2.1	103	S 77 E
1188.0	8.00	19.3	303	N 57 W	100	2.2	109	S 71 E
1190.0	8.00	23.3	317	N 43 W	94	2.2	102	S 78 E
1192.0	8.00	20.5	302	N 58 W	84	2.3	101	S 79 E
1194.0	8.00	20.0	310	N 50 W	68	2.4	106	S 74 E
1196.0	8.00	23.1	310	N 50 W	30	2.2	108	S 72 E
1200.0	8.00	33.8	290	N 70 W	51	2.1	102	S 78 E
1202.0	8.00	30.6	292	N 68 W	51	2.0	100	S 80 E
1204.0	8.00	29.2	300	N 60 W	56	2.0	109	S 71 E
1206.0	8.00	24.5	304	N 56 W	91	2.0	105	S 75 E
1208.0	8.00	21.7	312	N 48 W	67	2.0	102	S 78 E
1210.0	8.00	20.5	309	N 51 W	83	2.0	100	S 80 E
1212.0	8.00	25.4	304	N 56 W	73	1.9	100	S 80 E
1214.0	8.00	17.3	308	N 52 W	96	2.0	106	S 74 E
1216.0	8.00	17.2	317	N 43 W	100	2.0	102	S 78 E
1218.0	8.00	26.1	312	N 48 W	81	2.0	105	S 75 E
1220.0	8.00	24.5	315	N 45 W	100	1.9	99	S 81 E
1222.0	8.00	24.5	315	N 45 W	100	1.9	98	S 82 E
1224.0	8.00	21.1	318	N 42 W	87	2.0	100	S 80 E
1226.0	8.00	17.1	320	N 40 W	86	1.9	104	S 76 E
1228.0	8.00	15.3	9	N 9 E	46	1.9	103	S 77 E
1230.0	8.00	26.9	299	N 61 W	25	1.8	104	S 76 E
1232.0	8.00	26.1	304	N 56 W	33	1.9	104	S 76 E

WEXPRO COMPANY DIP325
COALVILLE NO. 12
COALVILLE GAS STORAGE
SUMMIT UTAH
12-23-83

DEPTH	WI.	**FORMATION DIP** ANG	AZ	BEARING	GRADE	****BOREHOLE***** DA	DAZ	BEARING
1234.0	8.00	31.8	289	N 71 W	62	1.9	97	S 83 E
1236.0	8.00	23.1	296	N 64 W	70	1.9	102	S 78 E
1238.0	8.00	26.6	292	N 68 W	63	1.8	103	S 77 E
1240.0	8.00	18.2	264	S 84 W	96	1.8	106	S 74 E
1242.0	8.00	21.8	303	N 57 W	98	1.8	108	S 72 E
1244.0	8.00	20.0	272	N 88 W	88	1.8	110	S 70 E
1246.0	8.00	24.1	304	N 56 W	84	1.8	110	S 70 E
1248.0	8.00	29.8	299	N 61 W	62	1.9	110	S 70 E
1250.0	8.00	7.0	285	N 75 W	39	1.9	110	S 70 E
1252.0	8.00	27.9	118	S 62 E	17	1.8	111	S 69 E
1254.0	8.00	19.5	107	S 73 E	14	1.8	112	S 68 E
1256.0	8.00	23.6	84	N 84 E	39	1.8	113	S 67 E
1258.0	8.00	21.1	264	S 84 W	37	1.7	113	S 67 E
1260.0	8.00	17.2	306	N 54 W	82	1.7	113	S 67 E
1262.0	8.00	17.0	296	N 64 W	100	1.7	113	S 67 E
1264.0	8.00	19.3	306	N 54 W	100	1.7	113	S 67 E
1266.0	8.00	23.1	306	N 54 W	100	1.9	113	S 67 E
1268.0	8.00	27.6	306	N 54 W	100	1.9	113	S 67 E
1270.0	8.00	25.8	293	N 67 W	100	1.9	113	S 67 E
1272.0	8.00	23.6	299	N 61 W	100	1.8	114	S 66 E
1274.0	8.00	25.1	289	N 71 W	100	1.9	116	S 64 E
1276.0	8.00	22.8	295	N 65 W	57	1.9	116	S 64 E
1278.0	8.00	16.6	319	N 41 W	69	1.9	115	S 65 E
1282.0	8.00	20.6	302	N 58 W	100	2.0	110	S 70 E
1284.0	8.00	20.0	304	N 56 W	100	1.9	113	S 67 E
1286.0	8.00	19.4	300	N 60 W	100	1.9	110	S 70 E
1288.0	8.00	20.3	297	N 63 W	100	2.0	112	S 68 E
1290.0	8.00	20.0	294	N 66 W	100	2.0	112	S 68 E
1292.0	8.00	19.5	291	N 69 W	100	2.0	113	S 67 E
1294.0	8.00	16.5	262	S 82 W	71	2.0	110	S 70 E
1296.0	8.00	25.3	283	N 77 W	68	2.0	108	S 72 E
1298.0	8.00	23.2	257	S 77 W	67	1.9	109	S 71 E
1300.0	8.00	20.2	318	N 42 W	61	1.9	105	S 75 E
1302.0	8.00	14.8	300	N 60 W	19	2.0	106	S 74 E
1304.0	8.00	3.8	34	N 34 E	57	1.9	103	S 77 E
1310.0	8.00	28.2	310	N 50 W	85	1.9	105	S 75 E
1312.0	8.00	19.9	306	N 54 W	100	2.0	104	S 76 E
1314.0	8.00	16.2	308	N 52 W	100	2.0	102	S 78 E
1316.0	8.00	14.3	293	N 67 W	100	1.9	104	S 76 E
1318.0	8.00	29.5	312	N 48 W	62	2.0	103	S 77 E

WEXPRO COMPANY DIP325
COALVILLE NO. 12
COALVILLE GAS STORAGE
SUMMIT UTAH
12-23-83

DEPTH	WL	**FORMATION DIP** ANG	AZ BEARING	GRADE	*****BOREHOLE***** DA	DAZ BEARING
1324.0	8.00	4.5	155 S 25 E	40	1.9	95 S 85 E
1326.0	8.00	16.5	284 N 76 W	50	2.0	94 S 86 E
1328.0	8.00	16.2	290 N 70 W	77	2.1	103 S 77 E
1330.0	8.00	17.4	302 N 58 W	100	2.1	99 S 81 E
1332.0	8.00	16.1	303 N 57 W	100	2.1	95 S 85 E
1334.0	8.00	19.8	307 N 53 W	100	2.1	95 S 85 E
1336.0	8.00	20.1	305 N 55 W	94	2.2	94 S 86 E
1338.0	8.00	27.0	289 N 71 W	74	2.1	99 S 81 E
1340.0	8.00	25.9	284 N 76 W	80	2.2	99 S 81 E
1342.0	8.00	25.6	281 N 79 W	61	2.1	98 S 82 E
1344.0	8.00	24.5	276 N 84 W	100	2.1	98 S 82 E
1346.0	8.00	23.6	276 N 84 W	97	2.0	100 S 80 E
1350.0	8.00	11.2	333 N 27 W	100	1.7	100 S 80 E
1352.0	8.00	16.5	310 N 50 W	100	1.6	97 S 83 E
1354.0	8.00	17.3	289 N 71 W	100	1.6	97 S 83 E
1356.0	8.00	16.0	284 N 76 W	100	1.6	113 S 67 E
1358.0	8.00	19.0	306 N 54 W	100	1.6	114 S 66 E
1360.0	8.00	19.9	305 N 55 W	93	1.7	115 S 65 E
1362.0	8.00	21.7	299 N 61 W	95	1.8	114 S 66 E
1364.0	8.00	24.0	293 N 67 W	85	1.8	112 S 68 E
1366.0	8.00	23.7	289 N 71 W	58	1.7	108 S 72 E
1368.0	8.00	22.3	289 N 71 W	41	1.7	114 S 66 E
1370.0	8.00	20.9	350 N 10 W	100	1.6	111 S 69 E
1380.0	8.00	20.2	327 N 33 W	12	1.8	105 S 75 E
1382.0	8.00	16.7	332 N 28 W	75	1.8	104 S 76 E
1386.0	8.00	23.7	308 N 52 W	82	1.9	112 S 68 E
1388.0	8.00	25.2	291 N 69 W	73	1.9	112 S 68 E
1390.0	8.00	11.4	241 S 61 W	32	2.0	103 S 77 E
1392.0	8.00	21.8	298 N 62 W	46	2.4	109 S 71 E
1396.0	8.00	20.2	283 N 77 W	63	2.0	103 S 77 E
1400.0	8.00	25.9	297 N 63 W	87	1.8	113 S 67 E
1402.0	8.00	27.6	292 N 68 W	71	1.8	111 S 69 E
1404.0	8.00	33.3	295 N 65 W	69	1.8	111 S 69 E
1406.0	8.00	26.2	291 N 69 W	87	1.8	111 S 69 E
1408.0	8.00	23.2	236 S 56 W	16	1.8	112 S 68 E
1410.0	8.00	26.7	246 S 66 W	47	1.9	108 S 72 E
1412.0	8.00	19.0	259 S 79 W	89	2.1	106 S 74 E
1414.0	8.00	23.4	241 S 61 W	79	2.2	107 S 73 E
1416.0	8.00	14.4	238 S 58 W	84	1.9	106 S 74 E
1418.0	8.00	13.5	240 S 60 W	97	1.9	106 S 74 E

WEXPRO COMPANY DIP325
COALVILLE NO. 12
COALVILLE GAS STORAGE
SUMMIT UTAH
12-23-83

DEPTH	WL	**FORMATION DIP** ANG	AZ	BEARING	GRADE	****BOREHOLE***** DA	DAZ	BEARING
1420.0	8.00	28.3	302	N 58 W	49	1.9	105	S 75 E
1422.0	8.00	23.4	303	N 57 W	91	1.9	104	S 76 E
1424.0	8.00	32.1	312	N 48 W	28	2.0	104	S 76 E
1426.0	8.00	27.4	311	N 49 W	51	1.9	103	S 77 E
1428.0	8.00	25.8	315	N 45 W	99	1.8	104	S 76 E
1430.0	8.00	23.1	318	N 42 W	100	1.8	103	S 77 E
1432.0	8.00	20.6	313	N 47 W	81	1.8	100	S 80 E
1434.0	8.00	23.5	309	N 51 W	100	1.8	104	S 76 E
1436.0	8.00	23.2	307	N 53 W	100	1.7	102	S 78 E
1438.0	8.00	22.8	314	N 46 W	100	1.7	103	S 77 E
1440.0	8.00	23.7	307	N 53 W	100	1.7	105	S 75 E
1442.0	8.00	20.8	302	N 58 W	100	1.8	102	S 78 E
1444.0	8.00	16.0	296	N 64 W	100	1.8	111	S 69 E
1446.0	8.00	13.8	266	S 86 W	53	2.0	108	S 72 E
1448.0	8.00	25.7	283	N 77 W	47	1.9	108	S 72 E
1450.0	8.00	26.4	306	N 54 W	76	1.7	107	S 73 E
1452.0	8.00	26.6	306	N 54 W	90	1.7	103	S 77 E
1454.0	8.00	26.8	308	N 52 W	86	1.8	112	S 68 E
1456.0	8.00	18.4	297	N 63 W	64	1.9	110	S 70 E
1458.0	8.00	15.8	296	N 64 W	76	1.9	108	S 72 E
1460.0	8.00	14.5	263	S 83 W	100	1.8	110	S 70 E
1462.0	8.00	12.6	272	N 88 W	82	1.9	109	S 71 E
1464.0	8.00	18.2	304	N 56 W	75	2.0	113	S 67 E
1470.0	8.00	21.0	308	N 52 W	76	2.0	109	S 71 E
1474.0	8.00	20.4	310	N 50 W	39	2.2	110	S 70 E
1476.0	8.00	14.5	334	N 26 W	68	2.0	110	S 70 E
1478.0	8.00	16.3	329	N 31 W	56	1.6	108	S 72 E
1480.0	8.00	19.0	276	N 84 W	38	1.6	117	S 63 E
1482.0	8.00	10.2	310	N 50 W	81	1.7	115	S 65 E
1484.0	8.00	14.3	303	N 57 W	88	1.8	116	S 64 E
1486.0	8.00	12.6	264	S 84 W	96	2.0	118	S 62 E
1488.0	8.00	8.8	275	N 85 W	100	1.9	118	S 62 E
1490.0	8.00	15.7	274	N 86 W	100	2.0	119	S 61 E
1492.0	8.00	18.6	266	S 86 W	58	1.8	122	S 58 E
1494.0	8.00	18.9	262	S 82 W	21	1.9	118	S 62 E
1496.0	8.00	28.8	290	N 70 W	24	1.9	119	S 61 E
1498.0	8.00	25.4	288	N 72 W	69	1.9	120	S 60 E
1500.0	8.00	15.3	298	N 62 W	100	1.9	121	S 59 E
1502.0	8.00	16.5	296	N 64 W	100	2.0	121	S 59 E
1504.0	8.00	17.3	290	N 70 W	89	2.0	115	S 65 E

WEXPRO COMPANY
COALVILLE NO. 12
COALVILLE GAS STORAGE
SUMMIT
12-23-83

DIP325

UTAH

DEPTH	WT.	**FORMATION DIP** ANG	AZ	BEARING	GRADE	*****BOREHOLE***** DA	DAZ	BEARING
1506.0	8.00	18.5	300	N 60 W	100	2.0	115	S 65 E
1508.0	8.00	24.9	300	N 60 W	70	2.0	115	S 65 E
1510.0	8.00	25.1	301	N 59 W	78	2.0	115	S 65 E
1512.0	8.00	24.8	301	N 59 W	100	2.0	115	S 65 E
1514.0	8.00	20.5	290	N 70 W	78	2.0	114	S 66 E
1516.0	8.00	20.2	280	N 80 W	100	2.0	113	S 67 E
1518.0	8.00	19.2	293	N 67 W	94	2.0	113	S 67 E
1520.0	8.00	13.8	297	N 63 W	55	2.0	113	S 67 E
1522.0	8.00	13.0	311	N 49 W	49	2.0	113	S 67 E
1524.0	8.00	16.8	311	N 49 W	27	2.0	111	S 69 E
1526.0	8.00	14.4	294	N 66 W	48	2.0	111	S 69 E
1528.0	8.00	22.4	312	N 48 W	100	2.1	118	S 62 E
1530.0	8.00	22.3	312	N 48 W	100	2.1	117	S 63 E
1532.0	8.00	22.5	311	N 49 W	100	2.2	116	S 64 E
1534.0	8.00	12.1	307	N 53 W	100	2.4	111	S 69 E
1536.0	8.00	25.1	310	N 50 W	100	2.5	116	S 64 E
1538.0	8.00	12.8	299	N 61 W	90	2.0	118	S 62 E

STATE OF UTAH
DEPARTMENT OF NATURAL RESOURCES
DIVISION OF OIL, GAS, AND MINING

FORM 9

SUNDRY NOTICES AND REPORTS ON WELLS

Do not use this form for proposals to drill new wells, significantly deepen existing wells below current bottom-hole depth, reenter plugged wells, or to drill horizontal laterals. Use APPLICATION FOR PERMIT TO DRILL form for such proposals.

5.LEASE DESIGNATION AND SERIAL NUMBER: FEE

6. IF INDIAN, ALLOTTEE OR TRIBE NAME:

7.UNIT or CA AGREEMENT NAME:

1. TYPE OF WELL
Gas Storage Well

8. WELL NAME and NUMBER:
COALVILLE GAS STORAGE 12

2. NAME OF OPERATOR:
QUESTAR PIPELINE COMPANY

9. API NUMBER:
43043302490000

3. ADDRESS OF OPERATOR:
P.O.Box 45360 , Salt Lake city , UT, 84145

PHONE NUMBER:
801 324-5061 Ext

9. FIELD and POOL or WILDCAT:
COALVILLE GAS STORAGE

4. LOCATION OF WELL
FOOTAGES AT SURFACE:
2170 FSL 1449 FEL
QTR/QTR, SECTION, TOWNSHIP, RANGE, MERIDIAN:
Qtr/Qtr: NWSE Section: 09 Township: 02.0N Range: 05.0E Meridian: S

COUNTY:
SUMMIT

STATE:
UTAH

11.
CHECK APPROPRIATE BOXES TO INDICATE NATURE OF NOTICE, REPORT, OR OTHER DATA

TYPE OF SUBMISSION

- ✓ NOTICE OF INTENT
  Approximate date work will start: 5/15/2016
- ☐ SUBSEQUENT REPORT
  Date of Work Completion:
- ☐ SPUD REPORT
  Date of Spud:
- ☐ DRILLING REPORT
  Report Date:

TYPE OF ACTION

☐ ACIDIZE	☐ ALTER CASING	☐ CASING REPAIR
☐ CHANGE TO PREVIOUS PLANS	☐ CHANGE TUBING	☐ CHANGE WELL NAME
☐ CHANGE WELL STATUS	☐ COMMINGLE PRODUCING FORMATIONS	☐ CONVERT WELL TYPE
☐ DEEPEN	☐ FRACTURE TREAT	☐ NEW CONSTRUCTION
☐ OPERATOR CHANGE	✓ PLUG AND ABANDON	☐ PLUG BACK
☐ PRODUCTION START OR RESUME	☐ RECLAMATION OF WELL SITE	☐ RECOMPLETE DIFFERENT FORMATION
☐ REPERFORATE CURRENT FORMATION	☐ SIDETRACK TO REPAIR WELL	☐ TEMPORARY ABANDON
☐ TUBING REPAIR	☐ VENT OR FLARE	☐ WATER DISPOSAL
☐ WATER SHUTOFF	☐ SI TA STATUS EXTENSION	☐ APD EXTENSION
☐ WILDCAT WELL DETERMINATION	☐ OTHER	OTHER:

12. DESCRIBE PROPOSED OR COMPLETED OPERATIONS. Clearly show all pertinent details including dates, depths, volumes, etc.

Questar Pipeline Company is filing this Notice of Intent to Plug and Abandon Coalville 12. Attached is the proposed plugging procedure as well as the current and proposed wellbore diagrams. The location will be reclaimed at a later date.

Approved by the Utah Division of Oil, Gas and Mining

Date: March 23, 2016

By: Dark K Quist

Please Review Attached Conditions of Approval

NAME (PLEASE PRINT)	PHONE NUMBER	TITLE
Chris B. Balling	801 324-3619	Property Agent - ROW

SIGNATURE	DATE
N/A	3/17/2016

RECEIVED: Mar. 17, 2016

The Utah Division of Oil, Gas, and Mining

- State of Utah
- Department of Natural Resources

Electronic Permitting System - Sundry Notices

Sundry Conditions of Approval Well Number 43043302490000

1. Notify the Division at least 24 hours prior to conducting abandonment operations. Please call Dan Jarvis at 801-538-5338.

2. Add Plug #3: A 25 sk (125') cement plug shall be balanced from 525' to 400' to isolate the surface shoe and fresh water from over pressured salt water sands.

3. All balanced plugs shall be tagged to ensure they are at the depths specified in the procedure.

4. All annuli shall be cemented from a minimum depth of 100' to the surface.

5. Surface reclamation shall be done in accordance with R649-3-34 – Well Site Restoration.

6. All requirements in the Oil and Gas Conservation General Rule R649-3-24 shall apply.

7. If there are any changes to the procedure or the wellbore configuration, notify Dustin Doucet at 801-538-5281 (ofc) or 801-733-0983 (home) prior to continuing with the procedure.

8. All other requirements for notice and reporting in the Oil and Gas Conservation General Rules shall apply.

RECEIVED: Mar. 23, 2016

Wellbore Diagram

API Well No: 43-043-30249-00-00 **Permit No:** **Well Name/No:** COALVILLE GAS STORAGE 12

Company Name: QUESTAR PIPELINE COMPANY

Location: Sec: 9 T: 2N R: 5E Spot: NWSE

Coordinates: X: 467725 Y: 4529988

Field Name: COALVILLE GAS STORAGE

County Name: SUMMIT

String Information

String	Bottom (ft sub)	Diameter (inches)	Weight (lb/ft)	Length (ft)	Capacity (f/ft)
HOL1	510	17.5			
SURF	510	13.325	54.5		
HOL2	1532	12.25			
I1	1532	9.625	36		
HOL3	3060	8.75			
PROD	3048	7	20		4.399

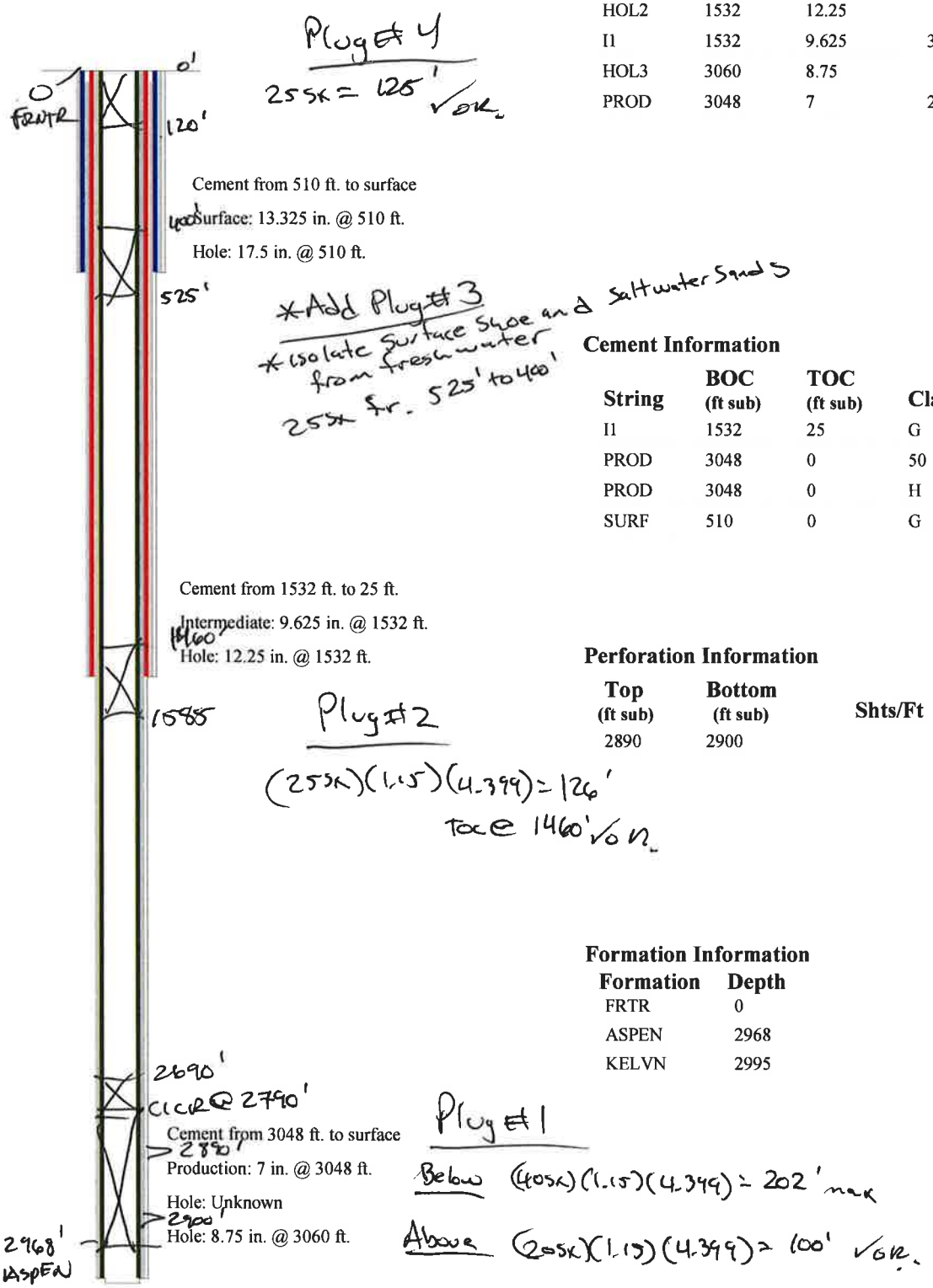

Cement Information

String	BOC (ft sub)	TOC (ft sub)	Class	Sacks
I1	1532	25	G	730
PROD	3048	0	50	300
PROD	3048	0	H	300
SURF	510	0	G	600

Perforation Information

Top (ft sub)	Bottom (ft sub)	Shts/Ft	No Shts	Dt Squeeze
2890	2900			

Formation Information

Formation	Depth
FRTR	0
ASPEN	2968
KELVN	2995

TD: 3060 **TVD:** **PBTD:**

Questar Pipeline Company
333 South State Street
P.O. Box 45360
Salt Lake City, UT 84145
Tel (801) 324-3160
Fax (801) 324-5606

Coalville Gas Storage 12

API 43-043-30249

Plugging Procedure

1. Test / install dead men anchors.
2. MIRU slickline. Set FB tank and run line to same f/ WH for tubing bleed off. RIH w/ 2.80" GR to locate the Otis "X" nipple w/ 2.75" ID @ ~2823'. POOH and MU 2.75" blanking plug. RIH and set plug in bottom "X" nipple (~ 2830') POOH. Hang back slickline. HU and bleed off tubing to FB tank to ensure plug set. RD slickline.
3. MIRU a contract workover rig w/ pipe racks, mud pump, rig tank, and 1 – 400 bbl upright. Fill the upright with fresh water. Move in and set one 200 bbl cement returns tank. Lay return lines from flow back and rig tank to the wellhead. Bleed off any remaining well pressures.
4. HU, fill tubing and casing annulus with fresh water taking note of volumes to fill. With annulus open to tank pressure test tubing and blanking plug to 1500#. Bleed off pressure f/ tubing.
5. RU wireline contractor to perforate the 3-1/2" tubing in the bottom joint above the "Otis Seal assy" with 6 shots (¼" EH). POOH w/ WL. HU to tubing and establish circulation down tubing taking returns up casing annulus. Tubing vol. ~ 24 bbl. Casing annulus vol. ~80 bbls. RD WL after circulation has been established. Note: Annulus fluid may be a petroleum base fluid.
6. ND production tree and NU 7-1/16", 5M hydraulically operated double gate BOP with stripper head equipped w/ 3-1/2" pipe rams in the top gate and blind rams in the bottom gate. Function-test both the blind and pipe rams. Hook up pump line to BOPE.
7. Install pup into hanger & PU and un-land tubing and sting out of packer w/ seal assy.
8. Break out and LD hanger, 1 jt of Seal Lock tubing and 2 tubing pups.
9. POOH SB 46 stands of 3-1/2" EUE 8rd tubing. LD bottom single perforated jt and the Otis seal assy. Keep hole full for pipe displacement during trip out.
10. If returns were clean during circulation. NU a 7-1/16" x 3-1/2" EUE 8rd companion flange to top of BOP. RU slickline and RIH and retrieve the blanking plug from lower "X" nipple. RD slickline.
11. MIRU WL contractor with pressure control and lubricator. NU 7-1/16" WL flange. RIH w/ 6.00" GR/JB. Locate top of Otis permanent packer @ ~2806'. POOH, LD GR/JB. MU WL set CICR for 7" 23# casing. RIH and set CICR ~ 5' above Baker permanent packer top (~ 2,801'). Bleed off pressure from casing while POOH. RD WL.
12. MU slick cement stinger w/ XO's for CICR. Note: Will need 1 joint of replacement tubing to replace perforated joint. (transfer from Coalville #9)
13. TIH to near top of CICR ~ 2,790'. HU and circulate hole volume w/ fresh water. Pressure test casing and CICR to 1500 psi to ensure integrity. MU tubing spacing pups w/ safety valve and tubing swivel. Close safety valve and sting into CICR. Re-test annulus to 500# to ensure CICR seal.
14. Open safety valve on tubing to pump line. Establish injection rate thru CICR. Monitor annulus pressure during injection test.

RECEIVED: Mar. 17, 2016

15. RU cementing services.

Cement squeeze#1

16. Mix and pump 60 sks (15.8 ppg slurry / 1.15 yield 12.2 bbls). Squeeze 40 sks (8.2 bbls) below CICR displacing w/ 20 bbls of water. With 20 sks (~4 bbls) left in tubing, sting out and displace w/ ~3 bbl of water to balance cement to leave a ~102' cement plug f/ 2,801' up to ~2,700' (after tubing pull out) inside the 7" 23# casing above CICR.
17. POOH LD space out pups and 3 jts to ~2700'.
18. RU cementers and reverse out w/ 30 bbls fresh water.

9.0# POZ SPACER #1 (2700' up to 1,585')

19. Mix and pump a 9.0# balanced Poz-Gel spacer to place same from 2,700' up to 1,585' inside 7" 23 & 20# casing after tubing pull out. ~45 bbls (Assume 9.94 yield)
20. POOH LD tubing to ~ 1,585'.

Balanced cement plug #1 (~1585' - ~1460') inside 7" 20# opposite Inter. Csg shoe

21. RU cementers. Mix and pump 25 sks (15.8 ppg slury 1.15 yield - 5.2 bbls) of cement to lay in a balanced cement plug f/ 1585' up to 1460' (125') inside the 7" 20# casing after tubing pull out.
22. POOH LD 5 joints of tubing to ~ 1435'.
23. HU and reverse out f/ ~1435' w/ 20 bbls fresh water.

9.0# POZ SPACER #2 (1435' to surface).

24. Mix and pump a 9.0# balanced Poz-Gel spacer surface to surface from 1435' ~53 bbls (Assume 9.94 yield)
25. POOH LD all of the tubing. Tubing displacement ~4.8 bbls. (120' of fluid drop after tubing pulled)
26. ND BOPE, RD and move off rig and assoc. equip.
27. Remove dead men anchors from private property by unthreading rods from petals 6' below GL.
28. Excavate from out around WH (cement was circulated to surface on all casing strings and a 25' KB depth to cement top noted on the 9-5/8" casing / cementing report 12-23-83). Cut windows in outside casing and cut off and drop 7" casing string.

Surface cement plug (120' - surface) inside 7" 20# casing

29. Cut off and remove WH equip. at cellar bottom. Top out w/ 25 sks (15.8 ppg cement slurry – 1.15 yield – 5 bbls) inside the 7"casing to surface and top out all casing annuli as needed.
30. After cutting off WH. Move in dirt equip. and remove well pad gravel and pit run material down to hay field grade. Excavate around surface casing to 4' below hay field grade and cut off all casing stings.
31. Install sub surface regulation abandonment marker plate and obtain GPS coordinates for location and note in report. Back fill over marker.

RECEIVED: Mar. 17, 2016

Current Wellbore Diagram

Daily Operations Report

Wellbore Diagram

Well Name:	Coalville Gas Storage 12
County, State	Summit, UT
Legal Description:	NWSE 9-2N-5S
API:	43-043-30249
SHL:	2170' FSL, 1449' FEL
Updated By:	Jeff Bluemel
Date Updated:	3/9/2016
Spud Date:	12/10/1983
TD Date:	1/9/1984
Well TD:	3,060
Orientation:	Vertical
Plug Back MD:	2,995
Bridge Plug MD:	
Injecting Frac Jobs:	1

Latitude	40.92037
Longitude	-111.3833

As Of Completion	8/26/1984

All measurements are in KB unless otherwise specified.

Adobe Acrobat Document

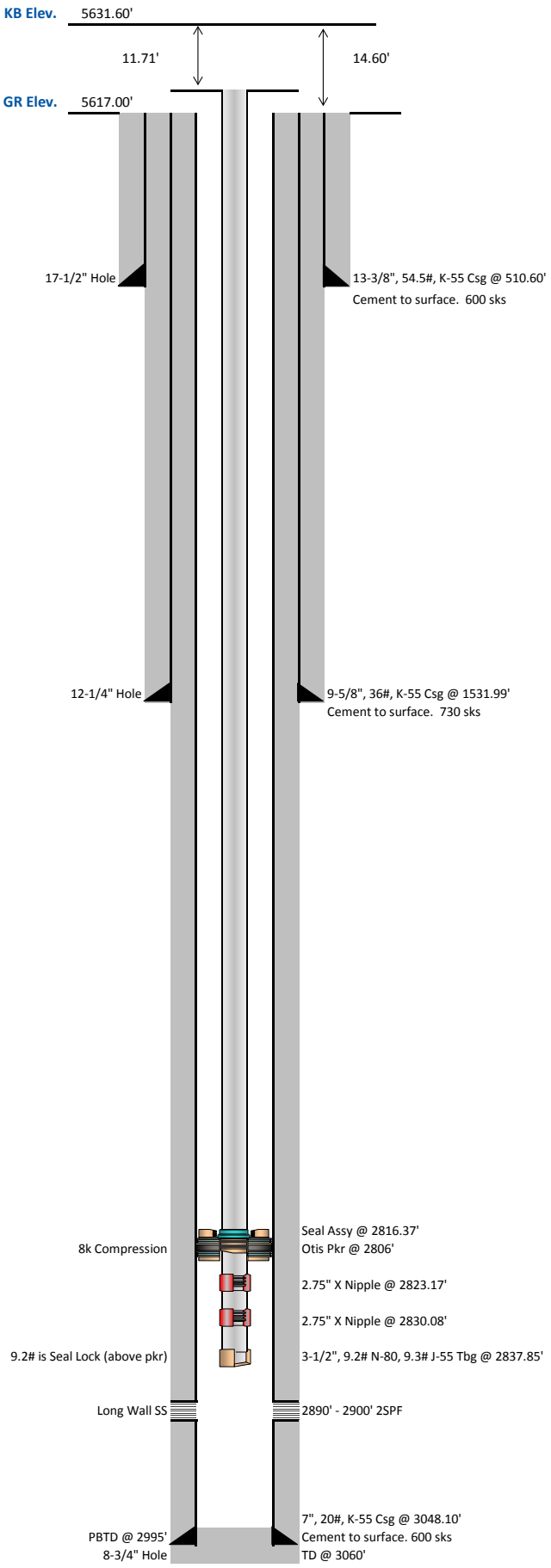

RECEIVED: Mar. 17, 2016

Current Wellbore Diagram

Daily Operations Report

Wellbore Diagram

Well Name:	Coalville Gas Storage 12
County, State	Summit, UT
Legal Description:	NWSE 9-2N-5S
API:	43-043-30249
SHL:	2170' FSL, 1449' FEL
Updated By:	Jeff Bluemel
Date Updated:	3/10/2016
Spud Date:	12/10/1983
TD Date:	1/9/1984
Well TD:	3,060
Orientation:	Vertical
Plug Back MD:	Surface
Bridge Plug MD:	
Injecting Frac Jobs:	None

Latitude	40.92037
Longitude	-111.3833

As Of P&A	Pending

All measurements are in KB unless otherwise specified.

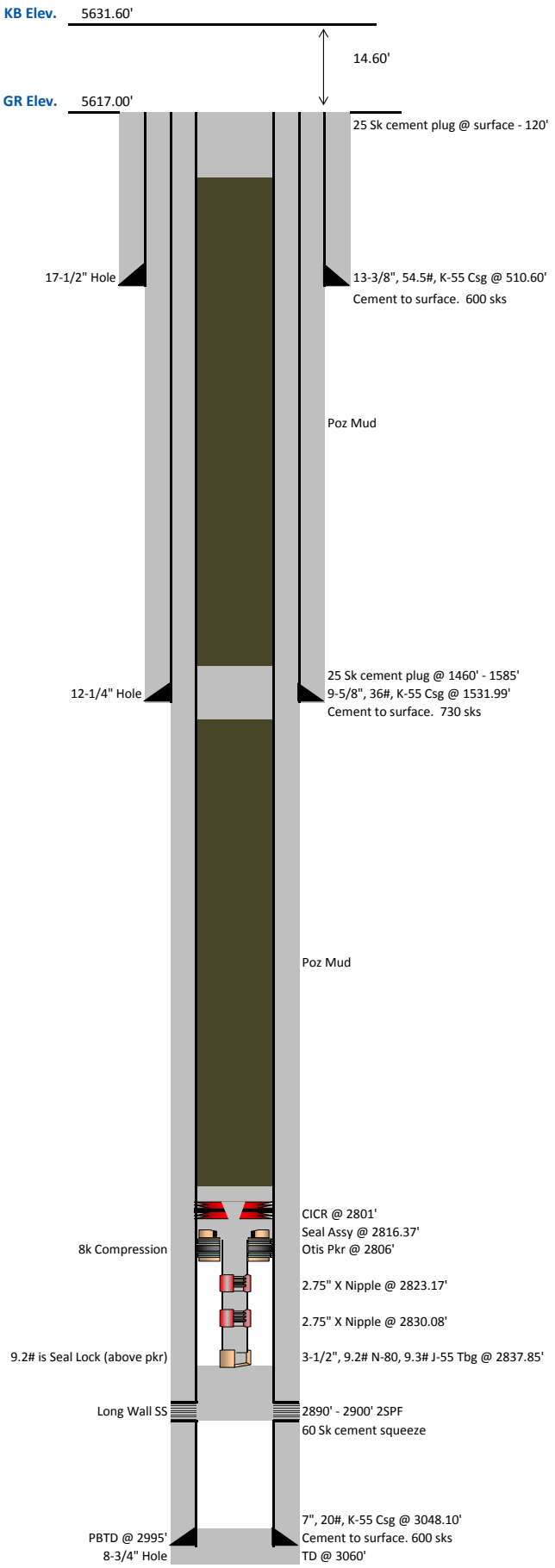

RECEIVED: Mar. 17, 2016

STATE OF UTAH
DEPARTMENT OF NATURAL RESOURCES
DIVISION OF OIL, GAS, AND MINING

FORM 9

5.LEASE DESIGNATION AND SERIAL NUMBER: FEE

SUNDRY NOTICES AND REPORTS ON WELLS

Do not use this form for proposals to drill new wells, significantly deepen existing wells below current bottom-hole depth, reenter plugged wells, or to drill horizontal laterals. Use APPLICATION FOR PERMIT TO DRILL form for such proposals.

6. IF INDIAN, ALLOTTEE OR TRIBE NAME:

7.UNIT or CA AGREEMENT NAME:

1. TYPE OF WELL
Gas Storage Well

8. WELL NAME and NUMBER:
COALVILLE GAS STORAGE 12

2. NAME OF OPERATOR:
QUESTAR PIPELINE COMPANY

9. API NUMBER:
43043302490000

3. ADDRESS OF OPERATOR:
P.O.Box 45360 , Salt Lake city , UT, 84145

PHONE NUMBER:
801 324-5061 Ext

9. FIELD and POOL or WILDCAT:
COALVILLE GAS STORAGE

4. LOCATION OF WELL
FOOTAGES AT SURFACE:
2170 FSL 1449 FEL
QTR/QTR, SECTION, TOWNSHIP, RANGE, MERIDIAN:
Qtr/Qtr: NWSE Section: 09 Township: 02.0N Range: 05.0E Meridian: S

COUNTY:
SUMMIT

STATE:
UTAH

11.
CHECK APPROPRIATE BOXES TO INDICATE NATURE OF NOTICE, REPORT, OR OTHER DATA

TYPE OF SUBMISSION	TYPE OF ACTION		
✓ NOTICE OF INTENT Approximate date work will start: 6/15/2016	☐ ACIDIZE	☐ ALTER CASING	☐ CASING REPAIR
	☐ CHANGE TO PREVIOUS PLANS	☐ CHANGE TUBING	☐ CHANGE WELL NAME
	☐ CHANGE WELL STATUS	☐ COMMINGLE PRODUCING FORMATIONS	☐ CONVERT WELL TYPE
☐ SUBSEQUENT REPORT Date of Work Completion:	☐ DEEPEN	☐ FRACTURE TREAT	☐ NEW CONSTRUCTION
	☐ OPERATOR CHANGE	☐ PLUG AND ABANDON	☐ PLUG BACK
	☐ PRODUCTION START OR RESUME	✓ RECLAMATION OF WELL SITE	☐ RECOMPLETE DIFFERENT FORMATION
☐ SPUD REPORT Date of Spud:	☐ REPERFORATE CURRENT FORMATION	☐ SIDETRACK TO REPAIR WELL	☐ TEMPORARY ABANDON
	☐ TUBING REPAIR	☐ VENT OR FLARE	☐ WATER DISPOSAL
☐ DRILLING REPORT Report Date:	☐ WATER SHUTOFF	☐ SI TA STATUS EXTENSION	☐ APD EXTENSION
	☐ WILDCAT WELL DETERMINATION	☐ OTHER	OTHER:

12. DESCRIBE PROPOSED OR COMPLETED OPERATIONS. Clearly show all pertinent details including dates, depths, volumes, etc.

Questar Pipeline Company will reclaim property around Coalville Well #12 after the well head and facilities have been plugged and removed from the site. The reclamation will be done by grading and leveling the property and reseeding. This reclamation will be done under the direction and approval of the current property owner.

Approved by the
Utah Division of
Oil, Gas and Mining
April 05, 2016
Date:
By:

NAME (PLEASE PRINT)	PHONE NUMBER	TITLE
Chris B. Balling	801 324-3619	Property Agent - ROW
SIGNATURE		**DATE**
N/A		3/17/2016

RECEIVED: Mar. 17, 2016

Daily Operations Report

Workover

QUESTAR Wexpro

Operation	Well Name	Report Date	Casing Size	Tubing Size	Foreman	Day
x Workover Repair Plug & Abandon	Coalville Gas Storage 12	5/13/2016	7" 20# K-55	3-1/2" 9.3# N-80 9.2# J-55	J. Abraham / S.Colvin	8

SICP	SITP	FCP	FTP	Formation	PBTD	TD	W.O. AFE $	AFE
				Long Wall SS	Surface	3,060	114,550	55140

New Perforations	Existing Perforations
43-043-30249 9 2N 5E	2890' - 2900' 2SPF

From	To		Detail of Operations in Sequence and Remarks:
			Rig Number:
7:30	17:00	9.5	Excavated from out around WH. Cut off and fill 20" Mouse hole w/ pit run, removed cellar ring. Cut-off and split 20" conductor. Knock off cement f/ around 13-3/8" surface casing. Cut-off 9-5/8" by 11" thread on casing head w/ 11" by 7" tubing head. Cut, split and pull off 13-3/8" surface casing f/ around 9-5/8" interm. casing, cut off the 9-5/8" Interm. casing and pull off over the top of 7" production casing, cut off 7" casing. All casing strings cut off 4' below landowners field grade. Cement level inside 7" was 7' below cut off level and cement level between 7" by 9-5/8" was 2-1/2' below cut-off. Top out all annuli w/ 3 sks of sakcrete to cut-off level. Weld on regulation abandonment marker plate. Note: Lisha Cordova w/ Utah DOGM wittnessed cut-off and cement top-off. Leveled out location pad per land owner and back fill over cover plate.
			Surface location by GPS 49.920327, -111.383328.
Total Hours:		9.5	

Daily Cost: Total Cost: $ 84,403

RECEIVED
MAY 13 2016
DIV. OF OIL, GAS & MINING

Daily Operations Report

Workover

QUESTAR Wexpro

Operation	Well Name	Report Date	Casing Size	Tubing Size	Foreman	Day
x Workover Repair Plug & Abandon	Coalville Gas Storage 12	5/10/2016	7" 20# K-55	3-1/2" 9.3# N-80 9.2# J-55	S. Colvin	7

SICP	SITP	FCP	FTP	Formation	PBTD	TD	W.O. AFE $	AFE
0	0			Long Wall SS	Surface	3,060	114,550	55140

New Perforations 43-043-30249

Existing Perforations

2890' - 2900' 2SPF

From	To		Detail of Operations in Sequence and Remarks:
			Rig Number: Key 6052
6:30	7:00	0.5	PJSM, PU 4 jts. Mushy cement @ 420' kbm and set 3500# string wt on solid cement @ 441' kbm (13' in on jt #15)
7:00	7:45	0.8	POOH LD 2 joints. HU and circulated conventional w/ 12 bbls for btms up. Mix and pump 11 bbls of 9.0# poz gel (6 sks) to leave spacer inside 7" f/ 400 to 125' after tubing pull out. POOH LD remaining 13 jts.
7:45	8:30	0.8	RU WL, RIH w/ 1-11/16" OD perf gun. Perforated casing @125' KBM. POOH RD WL. Closed blind rams. HU cementer and attempt to circulate f/ 125' up 9-5/8" x 7" annulus. Pressure up to 2200# and pressure solid w/ no psi loss. Bleed off pressure.
8:30	9:30	1.0	PU RIH w/ 6 joints to 183' kbm. HU cementers to tubing. Mix and pump 7 bbls of 15.8 ppg cement (35sks Neat "G") surface to surface. POOH LD 5 joints. Burst coolant hose on rig engine. SD and make tempory repair to rig. POOH LD last jt and wash slips,tongs and BOPE.
9:30	10:30	1.0	Repair coolant hose on rig.
10:30	11:30	1.0	PU MU "Bowen Internal cutter" RIH to 3' below GL. Cut off 7" casing. LD cutter assy.
11:30	12:00	0.5	Breakf/lunch. RD & move cementing equip. to CVL #7 location.
12:00	13:30	1.5	RD floor and tools, ND BOPE. RD rig. After removing BOP measured down to cut off. Cut is 3' below GL or 17.60' below KB
13:30	16:00	2.5	Rack out pump, lines & equip. make ready for rig move.
16:00	17:00	1.0	Move by forklift 94 joints of 3-1/2" tubing to landowners back forty and stack same. Hual off water to D&B disposal in Bridger valley. SDFD
			Will excavate remove pad around WH down to 4' below field grade 5-12-16
Total Hours:		10.5	

Daily Cost: $ 27,757 **Total Cost:** $ 84,403

RECEIVED
MAY 1 2 2016
DIV. OF OIL, GAS & MINING

Daily Operations Report

Workover

QUESTAR Wexpro

Operation	Well Name	Report Date	Casing Size	Tubing Size	Foreman	Day
x Workover Repair Plug & Abandon	Coalville Gas Storage 12	5/9/2016	7" 20# K-55	3-1/2" 9.3# N-80 9.2# J-55	S. Colvin	6

SICP	SITP	7" x 9-5/8"	FTP	Formation	PBTD	TD	W.O. AFE $	AFE
0	0	0		Long Wall SS	2,995	3,060	114,550	55140

New Perforations 43-043-30249

Existing Perforations

2890' - 2900' 2SPF

From	To		Detail of Operations in Sequence and Remarks:
			Rig Number: Key 6052
6:30	7:00	0.5	Check pressures, started equip. PJSM
7:00	8:00	1.0	Lisha Cordova w/ Utah DNR on location to wittness pressure tests and cementing operations. Pressure tested casing annulus to 1060# and held for 10 min.(tubing open to atmos.) with no pressure losses. Bleed off pressure. HU to tubing , open pipe rams. Sting out of CICR. established circulation by reverse. Circulated 20 bbls, wash into CICR twice. Sting into retainer and attempted injection test. Pressure up to 2500#. Lost 50# in 5 min. Contacted Dustin Doucet w/ Ut. DNR and obtained approval to lay in a 200' 15.8# cement plug above CICR and to perforate the 7" production casing @ 125' at finish for surface plug.
8:00	9:30	1.5	Take Basic Energy cement blimp to CVL #7 location for stagging of cement product. Spot in RU cementers. RU Baker cement manifold.
9:30	9:45	0.3	PJSM on cementing operations.
9:45	10:00	0.3	Pressure tested lines 2000#. Set manifold to pump down tubing. Attempted to circulate 5 bbls of fresh water ahead of cement. Baker squeeze manifold cemented closed at bleed off valve. RD manifold. HU to casing and tubing for spotting plugs.
10:00	10:15	0.3	Mix and pump 8.1 bbls of slurry (16.0 ppg 40sks) Neat "G" cement.
10:15	10:30	0.3	Displaced cement w/22 bbls of fresh water to leave a 200' plug f/ 2795' up to 2595'. POOH LD 8 jts. EOT @ 2555'.
10:30	11:15	0.8	Reverse out w/ 30 bbls of fresh water,1/2 bbl cement & 1/2 bbl dirty water at btms up. Mix and pump 40 bbls of 9.0 ppg Poz-gel (22sks) and displaced same w/13 bbls water to balance for Poz spacer 2555' up to 1580'.
11:15	11:45	0.5	B/O pump line. Tubing standing full and balanced.POOH LD 33 jts to 1580'. HU cementers.
11:45	12:15	0.5	Mix and pump 4.1 bbls of 15.5 ppg - 16.1+ppg cement slurry (25 sks) mixed w/ 2% Cacl & lay in a balanced cement plug f/ 1580 up to 1454' (inside of 7" after tubing pull out). Displaced same w/ 13 bbls fresh water for balance. Bleed back 1/4 bbl displacement to cementer tubing is balanced. POOH LD 5 Jts. HU and reverse out f/ 1431' w/ 20 bbls. 3/4 bbl dirty water at btms up. POOH w/ 1 stand.
12:15	13:00	0.8	Break f/ lunch.
13:00	14:15	1.3	Pull stripper rubber.POOH SB 23 more stands B/O LD stinger. Load out squeeze manifold. PU MU 6' tubing pup to first stand. TIH w/ 23 stands.
14:15	16:00	1.8	Waiting on surface cement sample to set up to tag.
16:00	16:30	0.5	RIH w/ stand #24. PU 1 single and set 5k of string wt down on plug @ 1434' kbm LD single. HU and pump 36 bbls of 9.0 ppg poz-gel spacer (21sks) f/1431' up to 543' (inside 7" casing after tubing pull-out). Displace w/ 4 bbls water to balance.
16:30	17:00	0.5	RD cementers. POOH LD 30 Jts to 543'. RU cementers.
17:00	18:00	1.0	Establish circulation.Mix and pump 4.1 bbls of 15.8 ppg - 16.1+ppg cement slurry (25 sks) to lay in a balanced cement plug f/ 543' up to 418' (inside of 7" after tubing pull out). Displaced cement w/ 3.5 bbls fresh water. Tubing was balanced. POOH LD 5 Jts. HU and reverse out f/ 399' w/ 8 bbls. 3/4 bbl dirty water at btms up 1/4 bbl cement. POOH LD 2 joints. Leave EOT @ 340' FN. SIW. Clean cement returns tank with hydra-vac and hauled to disposal. SWSDFD
Total Hours:		11.5	

Daily Cost: $ 18,263 **Total Cost:** $ 56,646

RECEIVED
MAY 09 2016
DIV. OF OIL, GAS & MINING

Daily Operations Report

Workover

QUESTAR Wexpro

Operation	Well Name	Report Date	Casing Size	Tubing Size	Foreman	Day
x Workover Repair Plug & Abandon	Coalville Gas Storage 12	5/7/2016	7" 20# K-55	3-1/2" 9.3# N-80 9.2# J-55	S. Colvin	4

SICP	SITP	7" x 9-5/8"	FTP	Formation	PBTD	TD	W.O. AFE $	AFE
0	0	5		Long Wall SS	2,995	3,060	114,550	55140

New Perforations 43-043-30249

Existing Perforations

2890' - 2900' 2SPF

Detail of Operations in Sequence and Remarks:

From	To		
			Rig Number: Key Energy 6052
6:30	7:30	1.0	Started equip., check pressures, PJSM. PU on tubing to 70k, lower back down to 30k. Set tubing in slips. RU KLX WL , MU 2-7/16 OD chemical cutter.
7:30	9:30	2.0	RIH w/ cutter. Correlated to packer top @ 2813' f/ origanal tubing report. PUH w/ CCL to 2798', cut tubing @ 2807' (6' above SA origanal tubing report). POOH w/ WL, LD tools,RD WL. PU on tubing - Tubing free at string wt of 22k. POOH LD hanger and top joint. Install wiper rubber. POOH 6 & 8' tubing pups. POOH SB 46 stands in derrick. LD bottom perforated and cut off piece 24.08'.
9:30	12:00	2.5	Filled hole w/ 10 bbls of water. ND stripper head, NU 7-1/6" x 3-1/2" eue companion flange. RU Northern lights slickline. RIH. w/ centrilized 1.875" OD OS, attempt to stab into Cut-off stub above SA @. Could not get into stub. POOH, MU 2.231" OD "Flintstone camera" RIH and set down on stub @ 2807' kbm. POOH, block showed clean fish top on 3-1/2" tubing.
12:00	14:00	2.0	MU prong pulling tool, reconfigure tool string w/o centrilizer. RIH and again try to stab inside of stub w/ no success. POOH. Reconfigure tool string w/ 1- 2"- 5' wt bar on bottom above OS. RIH and again attempt to get inside of the cut-off stub w/ no success. POOH RD slickline. RU WL.
14:00	16:00	2.0	MU 1-11/16" tubing perf gun dressed 4 spf w/ 1 centrilizer above CCL ,10' wt bar, 2nd centrilizer and 10' wt. bar. RIH, located into top of cut-off stub. RIH and correlate to packer top. RI and set down on 2.75" PX plug @ 2835' KBM. Pressure up on casing w/ rig pump to 500#. Perforated the lower 6' tubing pup 2834'. Pressure slowly bled to 100# then to 0#. POOH. LD perf gun and 3" lubricator. ND 7-1/16" x 3-1/2" companion flange. NU 7-1/16" 5k WL flange.
16:00	19:00	3.0	MU PU 5" lubricator. MU RIH w/ 5.75" OD GR Pressure up on lubricator w/ rig pump to 500#. Opened rams, RIH to 2807' KBM. POOH closed rams and bleed off lubricator.LD GR/JB. MU 7" WLS CICR. PU Equalize lubricator to 500# w/ rig pump. NOTE: During pressure up of lubricator rig pump operator caught pressure faster than anticipated and pressured up to 1000# rocking lubricator above BOPE, it was then noticed that the tubing head was loose @ the 10" 3k flange @ casing head. Bolts are hand tight only !!!! Open rams and RIH w/ CICR. Correlated on depth CBL dated 1-20-84. RIH and lightly set down w/ CICR on tubing stub @ 2,800' WLM. PUH 5' and set the CICR @ 2802' KBM orig tubing report (2,795' WLM). POOH bleed off casing pressure to rig tank. RD WL.
19:00	19:30	0.5	Staighten up BOPE and tubing head. Tighten bolts on tubing head @ 4 corners. Arrange for Cameron to be on location in morning w/ hyd torque wrench and test equip.for testing void on pack-off of the tubing head. 4' diameter cellar ring preventing good swing of hammer to tighten bolts. SISW SDFD.
Total Hours:		13.0	

Daily Cost: $ 14,344 **Total Cost:** $ 32,031

RECEIVED
MAY 09 2016
DIV. OF OIL, GAS & MINING

Daily Operations Report

Workover

QUESTAR Wexpro

Operation	Well Name	Report Date	Casing Size	Tubing Size	Foreman	Day
x Workover Repair Plug & Abandon	Coalville Gas Storage 12	5/6/2016	7" 20# K-55	3-1/2" 9.3# N-80 9.2# J-55	S. Colvin	3

SICP	SITP	7" x 9-5/8"	FTP	Formation	PBTD	TD	W.O. AFE $	AFE
0	0	5		Long Wall SS	2,995	3,060	114,550	55140

New Perforations 43-043-30249

Existing Perforations

2890' - 2900' 2SPF

From	To		Detail of Operations in Sequence and Remarks:
			Rig Number: Key 6052
6:30	7:00	0.5	Check pressures , started equip. PJSM
7:00	8:30	1.5	Spot in RU KLX WL.
8:30	9:30	1.0	RIH w/ 1-11/16" tubing perf gun. Located packer top .PUH and perforated in the middle of bottom joint of 3-1/2" tubing above SA @ 2798'. POOH RD WL.
9:30	10:30	1.0	RU hot oiler to tubing. Circulated hole w/ 120 bbls of fresh water @ 120 degrees displacing condensate to FB tank. Color cut FB tank - 95 bbls of condensate returned on circulation.
10:30	11:30	1.0	RD hot oiler. ND tree, NU BOPE. RU floor and tools. Install seal-lock tubing pup into hanger w/ TIW valve.
11:30	14:30	3.0	PU and unlanded tubing hanger f/ head. String 22k. PU to 60k. Work tubing trying to get SA movement. Streatch calculation shows stuck @ SA. PU on tubing to a maximum of 80K. Worked and jarred on tubing string gaining no movement on tubing. PU and attempted to rotate tubing string several times (maximum torque of 2200 ft lbs) w/ PU wt's from 22k to 30k - gain 1 round before max torque. PU on tubing to 70k and let hang in elevators 1/2 hr. Worked tubing 3 more times f/ neutral to 70k. No gain in tubing movement. Landed hanger in head. Closed pipe rams on tubing pup. SISW, SDFD. Wait on chemical cutter to be hot shotted to RS.
Total Hours:		**8.0**	

Daily Cost: $ 6,420 **Total Cost:** $ 17,687

RECEIVED
MAY 09 2016
DIV. OF OIL, GAS & MINING

Daily Operations Report

Workover

QUESTAR Wexpro

Operation	Well Name	Report Date	Casing Size	Tubing Size	Foreman	Day
x Workover Repair Plug & Abandon	Coalville Gas Storage 12	5/5/2016	7" 20# K-55	3-1/2" 9.3# N-80 9.2# J-55	S. Colvin	2

SICP	SITP	FCP	FTP	Formation	PBTD	TD	W.O. AFE $	AFE
0	0			Long Wall SS	2,995	3,060	114,550	55140

New Perforations 43-043-30249

Existing Perforations

2890' - 2900' 2SPF

Detail of Operations in Sequence and Remarks:

From	To		
			Rig Number: Key Energy 6052
13:00	19:00	6.0	Move rigs equip. to location. Set in all assoc. equip. Set and fill 400 bbl upright tank w/ Coalville city water. RU and guy out rig. Run pump line to casing outlet. Set in cement returns tank. SDFD
Total Hours:		6.0	

Daily Cost: $ 4,373 **Total Cost:** $ 11,267

RECEIVED
MAY 03 2016
DIV. OF OIL, GAS & MINING

Number of good jts 48 **Number of jts out** 0

Company: Questar / Key Rig 6052 AFE: Date: 5/9/16

Well Name: Coalville Gas Storage # 12 (mon. well) G.L.: K.B.:

Known KB: Total KB Height: 7

Description: 43-043-30249 Working height: KB and Jewelry: 10.9

Orange numbers are total jts tallied J55 3½" tbg

Note: Write in blue or shade areas

1	1	59.84	70.74	21	21	56.80	1252.12	41	41	58.67	2437.68				
2	2	59.32	130.06	22	22	**61.50**	1313.62	42	42	58.41	2496.09				
3	3	59.22	189.28	23	23	59.36	1372.98	43	43	59.77	2555.86				
4	4	59.12	248.40	24	24	58.80	1431.78	44	44	59.61	2615.47				
5	5	59.80	308.20	25	25	59.90	1491.68	45	45	58.28	2673.75				
6	6	59.90	368.10	26	26	59.95	1551.63	46	46	58.86	2732.61				
7	7	58.53	426.63	27	27	57.85	1609.48	47	47	**30.81**	2763.42				
8	8	58.61	485.24	28	28	58.64	1668.12	48	48	**30.66**	2794.08				
9	9	58.32	543.56	29	29	59.11	1727.23								
10	10	59.90	603.46	30	30	59.76	1786.99								
11	11	58.74	662.20	31	31	59.95	1846.94								
12	12	58.61	720.81	32	32	59.17	1906.11								
13	13	58.86	779.67	33	33	59.68	1965.79								
14	14	57.32	836.99	34	34	57.95	2023.74								
15	15	59.89	896.88	35	35	**60.50**	2084.24								
16	16	**60.58**	957.46	36	36	59.27	2143.51								
17	17	58.77	1016.23	37	37	58.84	2202.35								
18	18	59.90	1076.13	38	38	58.94	2261.29								
19	19	59.74	1135.87	39	39	59.28	2320.57								
20	20	59.45	1195.32	40	40	58.44	2379.01								
		1184.42				1183.69				415.07					

RECEIVED

MAY 09 2016

DIV. OF OIL, GAS & MINING

STATE OF UTAH
DEPARTMENT OF NATURAL RESOURCES
DIVISION OF OIL, GAS, AND MINING

FORM 9

5.LEASE DESIGNATION AND SERIAL NUMBER: FEE

SUNDRY NOTICES AND REPORTS ON WELLS

Do not use this form for proposals to drill new wells, significantly deepen existing wells below current bottom-hole depth, reenter plugged wells, or to drill horizontal laterals. Use APPLICATION FOR PERMIT TO DRILL form for such proposals.

6. IF INDIAN, ALLOTTEE OR TRIBE NAME:

7.UNIT or CA AGREEMENT NAME:

1. TYPE OF WELL
Gas Storage Well

8. WELL NAME and NUMBER:
COALVILLE GAS STORAGE 12

2. NAME OF OPERATOR:
QUESTAR PIPELINE COMPANY

9. API NUMBER:
43043302490000

3. ADDRESS OF OPERATOR:
P.O.Box 45360 , Salt Lake city , UT, 84145

PHONE NUMBER:
801 324-5061 Ext

9. FIELD and POOL or WILDCAT:
COALVILLE GAS STORAGE

4. LOCATION OF WELL
FOOTAGES AT SURFACE:
2170 FSL 1449 FEL
QTR/QTR, SECTION, TOWNSHIP, RANGE, MERIDIAN:
Qtr/Qtr: NWSE Section: 09 Township: 02.0N Range: 05.0E Meridian: S

COUNTY:
SUMMIT

STATE:
UTAH

11.
CHECK APPROPRIATE BOXES TO INDICATE NATURE OF NOTICE, REPORT, OR OTHER DATA

TYPE OF SUBMISSION

- ☐ NOTICE OF INTENT
  Approximate date work will start:
- ✓ SUBSEQUENT REPORT
  Date of Work Completion: 5/13/2016
- ☐ SPUD REPORT
  Date of Spud:
- ☐ DRILLING REPORT
  Report Date:

TYPE OF ACTION

☐ ACIDIZE	☐ ALTER CASING	☐ CASING REPAIR
☐ CHANGE TO PREVIOUS PLANS	☐ CHANGE TUBING	☐ CHANGE WELL NAME
☐ CHANGE WELL STATUS	☐ COMMINGLE PRODUCING FORMATIONS	☐ CONVERT WELL TYPE
☐ DEEPEN	☐ FRACTURE TREAT	☐ NEW CONSTRUCTION
☐ OPERATOR CHANGE	✓ PLUG AND ABANDON	☐ PLUG BACK
☐ PRODUCTION START OR RESUME	☐ RECLAMATION OF WELL SITE	☐ RECOMPLETE DIFFERENT FORMATION
☐ REPERFORATE CURRENT FORMATION	☐ SIDETRACK TO REPAIR WELL	☐ TEMPORARY ABANDON
☐ TUBING REPAIR	☐ VENT OR FLARE	☐ WATER DISPOSAL
☐ WATER SHUTOFF	☐ SI TA STATUS EXTENSION	☐ APD EXTENSION
☐ WILDCAT WELL DETERMINATION	☐ OTHER	OTHER:

12. DESCRIBE PROPOSED OR COMPLETED OPERATIONS. Clearly show all pertinent details including dates, depths, volumes, etc.

Coalville 12 was P&A as per attached documentation. Please find attached a copy of the final report + updated WBD.

Accepted by the Utah Division of Oil, Gas and Mining
FOR RECORD ONLY
June 20, 2016

NAME (PLEASE PRINT)	PHONE NUMBER	TITLE
Jacob Isaac K. Abraham	801 324-3160	Associate Engineer - Reservoir

SIGNATURE	DATE
N/A	6/20/2016

RECEIVED: Jun. 20, 2016

Questar Pipeline Company
333 South State Street
P.O. Box 45360
Salt Lake City, UT 84145
Tel (801) 324-3160
Fax (801) 324-5606

Coalville Gas Storage 12

API 43-043-30249

Plugging Procedure

1. Operations began on 5/2/2016 and ended on 5/13/2016.
2. Plugging procedures witnessed by Lisha Cordova of the Utah DOGM Office.
3. Set CICR @ 2,802'.
4. Tested the casing to 1,060 psi for 10 minutes, no pressure lost.
5. Could not established injection rate.

Cement Plug

6. Mixed and laid 40 sks "G" cement balanced cement plug from 2,595' up to 2,795'.

Poz Spacer

7. Mixed and pumped balanced 40 bbl 9.0# Poz Gel spacer from 2,555' up to 1,580'.

Cement Plug

8. Mixed and laid in a 25 sk "G" cement balanced cement plug from 1,580' up to 1,454'.
9. Tagged cement at 1,434'.

Poz Spacer

10. Mixed and pumped balanced 36 bbl 9.0# Poz Gel spacer from 1,434' to 543'.

Cement Plug

11. Mixed and laid in a 25 sk "G" cement balanced cement plug from 543' up to 418'.
12. Tagged cement top @ 441'.

Poz Spacer

13. Mixed and pumped balanced 11 bbl 9.0# Poz Gel spacer from 400' to 125'.
14. Perforated csg from 125' – 126' 4SPF.
15. Unable to establish circulation down 7" casing and up 7" x 9-5/8" annulus.

RECEIVED: Jun. 20, 2016

Cement Plug

16. Mixed and laid in a 33 sk “G” cement balanced cement plug from 183’ up to surface.

Cement At Surface

17. Mixed and pumped 307 sk “G” cement down 4-1/2” csg with returns up the 4-1/2” x 9-5/8” annulus. Cement returns to surface.

Cement At Surface

18. Dig out around WH, cut off guy line anchors below GL.
19. Cutoff casing 3’ below GL.
20. Cement down 7’ in 7” casing below cutoff level. Cement down 2-1/2” in 7” x 9-5/8” annulus.
21. Top off with 3 sks cement.
22. Weld regulation dry hole marker plate onto top of 9-5/8” csg 4' below ground level.
23. Back fill hole.
24. Will reclaim at a later time.
25. GPS Coordinates:
    - Latitude: 40.920327°
    - Longitude -111.383328°

RECEIVED: Jun. 20, 2016

Daily Operations Report
Wellbore Diagram

Well Name:	Coalville Gas Storage 12
County, State	Summit, UT
Legal Description:	NWSE 9-2N-5S
API:	43-043-30249
SHL:	2170' FSL, 1449' FEL
Updated By:	Scott Colvin
Date Updated:	5/13/2016
Spud Date:	12/10/1983
TD Date:	1/9/1984
Well TD:	3,060
Orientation:	Vertical
Plug Back MD:	25'
Bridge Plug MD:	
Injecting Frac Jobs:	1

Latitude	40.92037
Longitude	-111.3833

As of PTA	5/13/2016

All measurements are in KB unless otherwise specified.

Adobe Acrobat Document

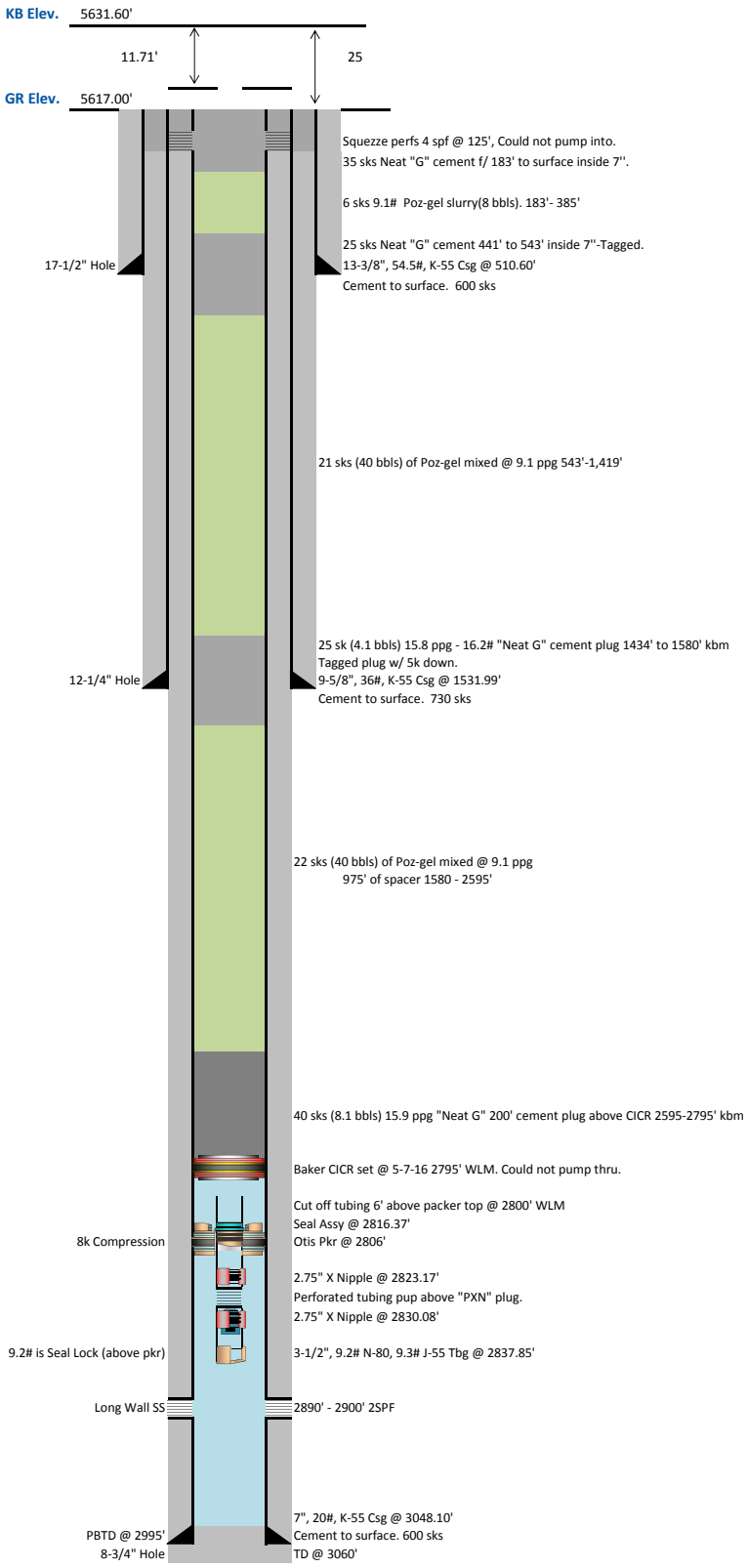

RECEIVED: Jun. 20, 2016