UTAH OIL AND GAS CONSERVATION COMMISSION

REMARKS: WELL LOG ____ ELECTRIC LOGS ✓ X WATER SANDS ____ LOCATION INSPECTED ____ AS SUB. REPORT/abd ____

*** Made new Card eff 2-15-91 ***

DATE FILED 11-1-82

LAND: FEE & PATENTED X STATE LEASE NO. ____ PUBLIC LEASE NO. ____ INDIAN ____

DRILLING APPROVED: 11-3-82

SPUDDED IN: 12-18-82

COMPLETED: 10-1-83 SIGW PUT TO PRODUCING: ____

INITIAL PRODUCTION: 466 BOPD, 5.68 MCF, 5BWPD

GRAVITY A.P.I. 51.8

GOR 12,189/1

PRODUCING ZONES: 12,500 - 12,814 NUGGETT (ngsd)

TOTAL DEPTH: 13,130'

WELL ELEVATION: 7129' KB, 7106' GL

DATE ABANDONED: PA ~~1-17-90~~ ~~12-89~~ 12-21-89

FIELD: ~~WILDCAT~~ North Pine View

UNIT: ____

COUNTY: SUMMIT

WELL NO. CHAMPLIN 544 AMOCO "D" #1 API NO. 43-043-30210

LOCATION B.H.L. 1980 FT. FROM (N) (S) LINE, 660 FT. FROM (E) (W) LINE NW SW 1/4 — 1/4 SEC. 25

SURFACE LOCATION 2045 FSL & 1169 FWL

TWP.	RGE.	SEC.	OPERATOR	TWP.	RGE.	SEC.	OPERATOR
3N	7E	25	AMOCO PRODUCTION CO.				

GEOLOGIC TOPS:

QUATERNARY	Star Point	Chinle	Molas
Alluvium	Wahweap	Shinarump	Manning Canyon
Lake beds	Masuk	Moenkopi	Mississippian
Pleistocene	Colorado	Sinbad	Humbug
Lake beds	Sego	PERMIAN	Brazer
TERTIARY	Buck Tongue	Kaibab	Pilot Shale
Pliocene	Castlegate	Coconino	Madison
Salt Lake	Mancos	Cutler	Leadville
Oligocene	Upper	Hoskinnini	Redwall
Norwood	Middle	DeChelly	DEVONIAN
Eocene	Lower	White Rim	Upper
~~Duchesne River~~ Leds Creek - 11488'	Emery	Organ Rock	Middle
~~Uinta~~ Walton Canyon - 11684'	Blue Gate	Cedar Mesa	Lower
~~Bridger~~ Boundary Ridge - 12026'	Ferron	Halgaite Tongue	Ouray
~~Green River~~ Rich - 12184'	Frontier	Phosphoria	Elbert
Slickrock - 12398'	Dakota	Park City	McCracken
Gypsum Springs - 12504'	Burro Canyon	Rico (Goodridge)	Aneth
NUGGET 12,552	Cedar Mountain	Supai	Simonson Dolomite
	Buckhorn	Wolfcamp	Sevy Dolomite
	JURASSIC	CARBON I FEROUS	North Point
Wasatch	Morrison	Pennsylvanian	SILURIAN
Stone Cabin	Salt Wash	Oquirrh	Laketown Dolomite
Colton	San Rafeal Gr.	Weber	ORDOVICIAN
Flagstaff	Summerville	Morgan	Eureka Quartzite
North Horn	Bluff Sandstone	Hermosa	Pogonip Limestone
Almy	Curtis		CAMBRIAN
Paleocene	Entrada	Pardox	Lynch
Current Creek	Moab Tongue	Ismay	Bowman
North Horn	Carmel	Desert Creek	Tapeats
CRETACEOUS	Glen Canyon Gr.	Akah	Ophir
Montana	Navajo	Barker Creek	Tintic
Mesaverde	Kayenta		PRE - CAMBRIAN
Price River	Wingate	Cane Creek	
Blackhawk	TRIASSIC		

VISIBLE CROZET VIRGINIA 100730

Form OGC-1a

SUBMIT IN TRIPLICATE*
(Other instructions on reverse side)

STATE OF UTAH
DEPARTMENT OF NATURAL RESOURCES
DIVISION OF OIL, GAS, AND MINING

APPLICATION FOR PERMIT TO DRILL, DEEPEN, OR PLUG BACK

5. Lease Designation and Serial No.: Fee

6. If Indian, Allottee or Tribe Name:

7. Unit Agreement Name:

8. Farm or Lease Name: Champlin 544 Amoco "D"

9. Well No.: #1

10. Field and Pool, or Wildcat: ~~Chalk Creek~~

11. Sec., T., R., M., or Blk. and Survey or Area: Sec. 25, T3N, R7E

12. County or Parrish: Summit

13. State: Utah

1a. Type of Work: DRILL [X] DEEPEN [ ] PLUG BACK [ ]

b. Type of Well: Oil Well [ ] Gas Well [X] Other Single Zone [ ] Multiple Zone [ ]

2. Name of Operator: AMOCO PRODUCTION COMPANY

3. Address of Operator: P.O. Box 17675 Salt Lake City, Utah 84117

4. Location of Well (Report location clearly and in accordance with any State requirements.*)
At surface: 2045' FSL & 1169' FWL
At proposed prod. zone: BHL: 1980' FSL & 660' FWL

14. Distance [redacted]

15. Distance from proposed* location to nearest property or lease line, ft. (Also to nearest drlg. line, if any): 1169'

16. No. of acres in lease:

17. No. of acres assigned to this well:

18. Distance from proposed location* to nearest well, drilling, completed, or applied for, on this lease, ft.:

19. Proposed depth: 13,500'

20. Rotary or cable tools: Rotary

21. Elevations (Show whether DF, RT, GR, etc.): 7556' GR

22. Approx. date work will start*: When Approved

RECEIVED
NOV 01 1982
DIVISION OF OIL, GAS & MINING

23. PROPOSED CASING AND CEMENTING PROGRAM

Size of Hole	Size of Casing	Weight per Foot	Setting Depth	Quantity of Cement
26"	20"	106#	300'	cmt to surface
17 1/2"	13 3/8"	48#-54.5#-61#	2000'	cmt to surface
12 1/4"	9 5/8"	40#-43.5#-47#	8480'	as determined
8 1/2"	7"	23#-26#-29#	10800'	as determined sufficient to cover salt and pay

PROPOSE TO TEST THE NUGGET FORMATION
FOR HYDROCARBON POTENTIAL
(See Attachments)

(Amoco proposes to drill the subject well in accordance with the Application filed under ~~Cause No. 200-1.~~ Subject well has been placed at a surface location to provide for natural West-Southwest drift and to avoid unnecessary environmental damage due to extremely rough terrain in the area.)

IN ABOVE SPACE DESCRIBE PROPOSED PROGRAM: If proposal is to deepen or plug back, give data on present productive zone and proposed new productive zone. If proposal is to drill or deepen directionally, give pertinent data on subsurface locations and measured and true vertical depths. Give blowout preventer program, if any.

24.

Signed: [signature] Title: Administrative Supervisor Date: 10/29/82

(This space for Federal or State office use)

Permit No. Approval: APPROVED BY THE STATE OF UTAH DIVISION OF OIL, GAS, AND MINING

Approved by Title

Conditions of approval, if any:

DATE: 11-3-82
BY: [signature]

*See Instructions On Reverse Side

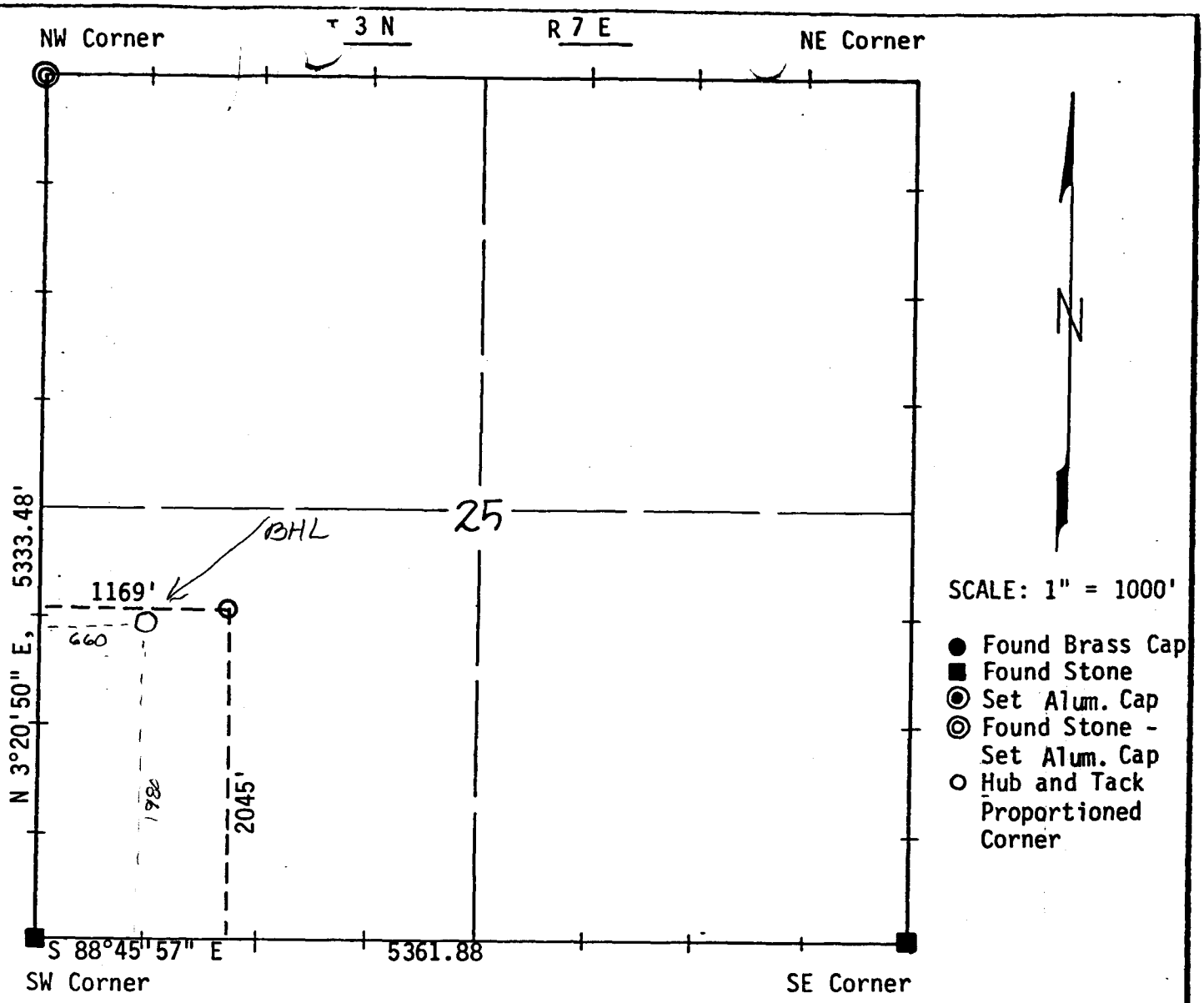

I, Loyal D. Olson, III of Evanston, Wyoming certify that in accordance with a request from Jon Jensen of Evanston, Wyoming for Amoco Production Company I made a survey on the 15th day of October, 1982 for Location and Elevation of the Champlin 544 D#1 as shown on the above map, the wellsite is in the NW-1/4 SW-1/4 of Section 25, Township 3 N, Range 7 E of the Salt Lake Base & Meridian, Summit County, State of Utah, Elevation is 7556 Feet top of hub Datum Mean Sea Level based on 3-Dimensional Control Network tied to USC & GS & USGS Benchmarks

Reference point

Reference point

Reference point

Reference point

REGISTERED LAND SURVEYOR 4954

10/21/82

LOYAL D. OLSON, III, UTAH R.L.S. NO.4954

UINTA ENGINEERING & SURVEYING, INC.
808 MAIN STREET, EVANSTON, WYOMING

BOOK NO.: 95

DATE: 10-21-82

JOB NO.: 82-10-70

ATTACHMENT TO FORM OGC-1a

Champlin 544 Amoco "D" No. 1

1) Geologic name of the surface formation: Tertiary

2) Estimated tops of geological markers:

Kelvin	5510'
Preuss	9310'
Salt	10200'
Twin Creek	10700'
Nugget	12200'

3) Casing Program: See Form OGC-1a, Item No. 23

4) Operators minimum specifications for pressure control equipment are explained on the attached schematic diagram. Testing of such is to be performed daily andnoted on the IADC Daily Drilling Report. After running surface casing (13 3/8") and prior to drilling out, the BOP and other pressure equipment will be tested to the full working pressure rating as shown on the attached schematic diagram. Thereafter, the BOP will be tested as required by State and/or Federal regulations.

5) Mud Program:

0 - 300'	Native, 9.0#/gal. mud, viscosity as required to clean hole
300' - 2000'	LSND, 8.6#-8.9#/gal.
2000' - 9500'	LSND, 8.6#-8.9#/gal.
9500' - TD	LSND, 8.6#-8.9#/gal.

6) Logging Program:

DIL-GR	Base of surface casing to TD
FDC-CNL-GR	" " " "
BHC-Sonic/GR	" " " "
HDT Dipmeter	" " " "
Check Shot	Surface to TD

7) No abnormal pressures, temperatures, or hydrogen sulfide gas is anticipated.

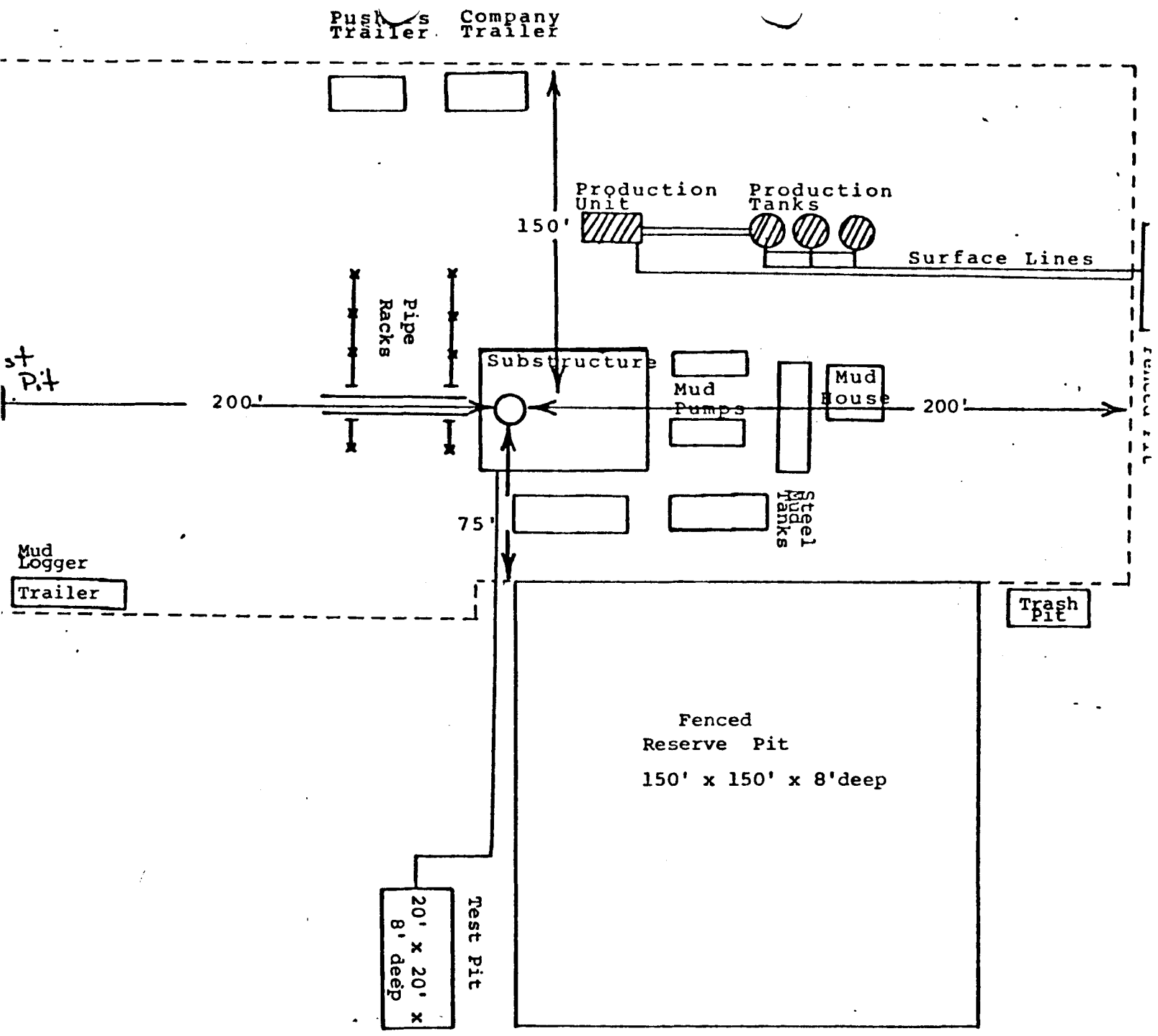

▨ = Shows permanent production equipment to be installed after drilling rig has moved out.

--= Dotted lines indicated perimeter of leveled location.

The fenced pit used for production will be covered if any fluid is present. The drilling and production pads will be constructed with doxers and graders using native material.

TYPICAL LOCATION LAYOUT

AMOCO PRODUCTION COMPANY
P. O. Box 17675
SALT LAKE CITY, UTAL 84117

EXHIBIT "D"

EXHIBIT BOP-5000

MINIMUM BLOW-OUT PREVENTER REQUIREMENTS

5,000 psi W.P.

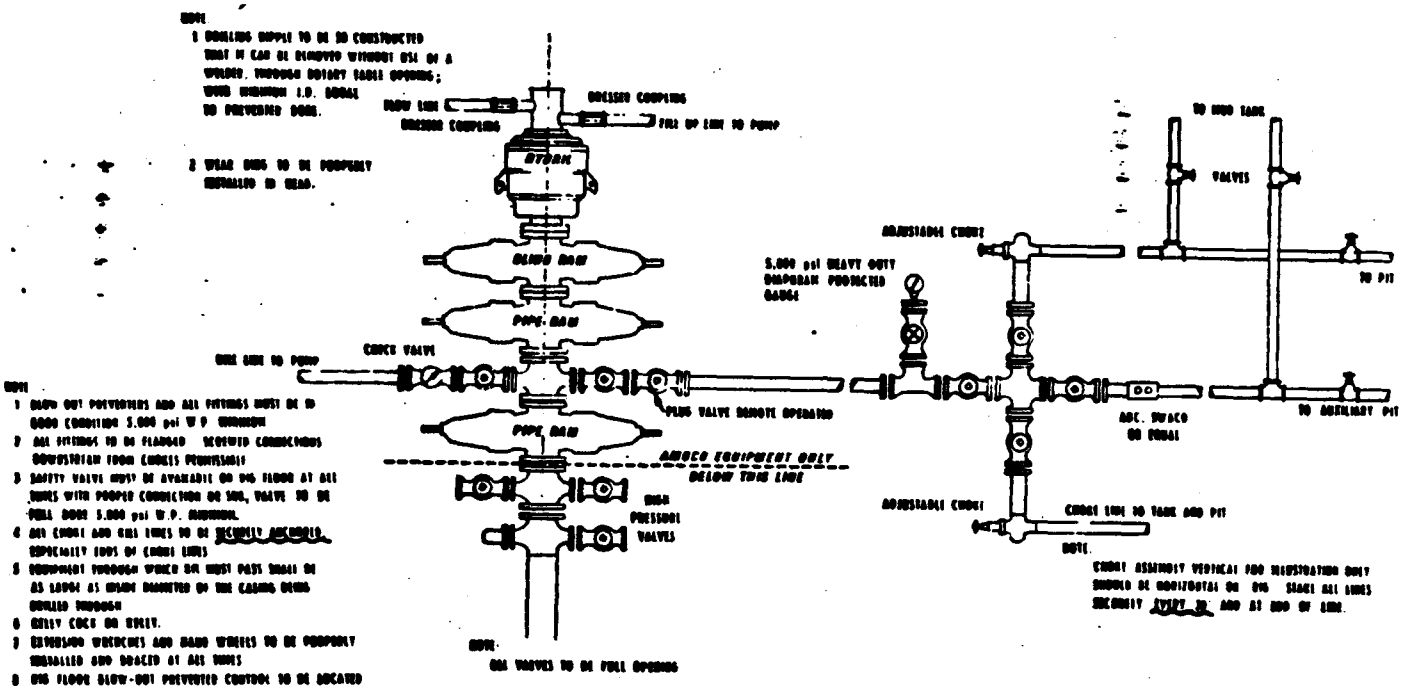

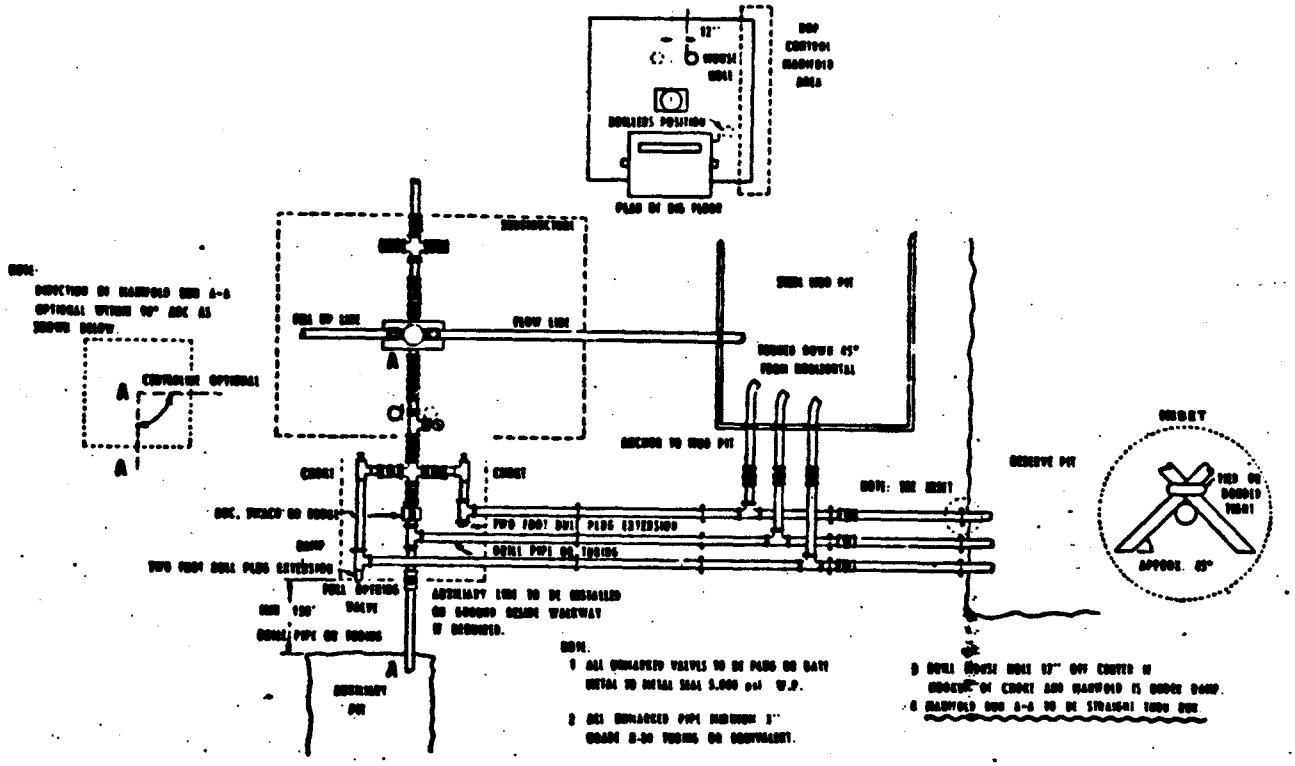

Amoco Production Company

STANDARD ASSEMBLY FOR FLUID OPERATED TRIPLE BLOW-OUT PREVENTER

5,000 psi W.P.

9-24-75

OPERATOR AMOCO DATE 11-3-82

WELL NAME CHAMPLIN 544 AMOCO "D" #1

SEC NWSW 25 T 3N R 7E COUNTY SUMMIT

43-043-30210	FEE
API NUMBER	TYPE OF LEASE

POSTING CHECK OFF:

[ ] INDEX	[✓] HL	[ ]
[ ] NID	[✓] PI	[ ]
[✓] MAP	[✓]	[ ]

PROCESSING COMMENTS: Directional drilling

RJF, ✓

APPROVAL LETTER:

SPACING: [ ] A-3 _____ UNIT [✓] c-3-a 203-1 10-28-82 CAUSE NO. & DATE

[ ] c-3-b [ ] c-3-c

SPECIAL LANGUAGE:

Directional survey data is required at time of completion

- [x] RECONCILE WELL NAME AND LOCATION ON APD AGAINST SAME DATA ON PLAT MAP.
- [x] AUTHENTICATE LEASE AND OPERATOR INFORMATION
- [ ] VERIFY ADEQUATE AND PROPER BONDING 3-23-79 Statewide fee bond
- [x] AUTHENTICATE IF SITE IS IN A NAMED FIELD, ETC.
- [x] APPLY SPACING CONSIDERATION
  - [ ] ORDER 203-1 10-28-82
  - [ ] UNIT _____
  - [ ] c-3-b
  - [ ] c-3-c
- [x] OUTSTANDING OR OVERDUE REPORTS FOR OTHER WELLS OF THE OPERATOR.

[4] POTASH NW

November 3, 1982

Amoco Production Company
P. O. Box 17675
Salt Lake City, Utah 84117

RE: Well No. Champlin 544 Amoco "D" #1
NWSW Sec. 25, T.3N, R.7E
Summit County, Utah

Gentlemen:

Insofar as this office is concerned, approval to drill the above referred to gas well is hereby granted in accordance with the Order issued in Cause No. 203-1 dated October 28, 1982. Directional survey data is required at time of completion.

Should you determine that it will be necessary to plug and abandon this well, you are hereby requested to immediately notify the following:

RONALD J. FIRTH - Engineer		CLEON B. FEIGHT - Director
Office: 533-5771	OR	Office: 533-5771
Home: 571-6068		Home: 466-4455

Enclosed please find Form OGC-8-X, which is to be completed whether or not water sands (acquifiers) are encountered during drilling. Your cooperation in completing this form will be appreciated.

Further, it is requested that this Division be notified within 24 hours after drilling operations commence, and that the drilling contractor and rig number be identified.

The API number assigned to this well is 43-043-30210.

Sincerely,

Norman C. Stout
Administrative Assistant

NCS/as
Enclosure

Form OGC-1b

SUBMI | TRIPLICATE*
(Oth nstructions on reverse side)

STATE OF UTAH
DEPARTMENT OF NATURAL RESOURCES
DIVISION OF OIL, GAS, AND MINING

SUNDRY NOTICES AND REPORTS ON WELLS

(Do not use this form for proposals to drill or to deepen or plug back to a different reservoir. Use "APPLICATION FOR PERMIT—" for such proposals.)

1. OIL WELL [XX] GAS WELL [ ] OTHER

2. NAME OF OPERATOR: AMOCO PRODUCTION COMPANY

3. ADDRESS OF OPERATOR: P.O. Box 17675 Salt Lake City, Utah 84117

4. LOCATION OF WELL (Report location clearly and in accordance with any State requirements.* See also space 17 below.) At surface: 2045' FSL & 1169 FWL (surface)

5. LEASE DESIGNATION AND SERIAL NO.: Fee

6. IF INDIAN, ALLOTTEE OR TRIBE NAME:

7. UNIT AGREEMENT NAME:

8. FARM OR LEASE NAME: Champlin 544 Amoco "D"

9. WELL NO.: #1

10. FIELD AND POOL, OR WILDCAT: Chalk Creek Area

11. SEC., T., R., M., OR BLK. AND SURVEY OR AREA: Sec. 25, T3N, R7E

14. PERMIT NO.: 43-043-30210

15. ELEVATIONS (Show whether DF, RT, GR, etc.): 7556' GR

12. COUNTY OR PARISH: Summit

13. STATE: Utah

16. **Check Appropriate Box To Indicate Nature of Notice, Report, or Other Data**

NOTICE OF INTENTION TO:				SUBSEQUENT REPORT OF:			
TEST WATER SHUT-OFF	[ ]	PULL OR ALTER CASING	[ ]	WATER SHUT-OFF	[ ]	REPAIRING WELL	[ ]
FRACTURE TREAT	[ ]	MULTIPLE COMPLETE	[ ]	FRACTURE TREATMENT	[ ]	ALTERING CASING	[ ]
SHOOT OR ACIDIZE	[ ]	ABANDON*	[ ]	SHOOTING OR ACIDIZING	[ ]	ABANDONMENT*	[ ]
REPAIR WELL	[ ]	CHANGE PLANS	[ ]	(Other) DESIGNATION OF DRILLING UNIT			[XX]
(Other)			[ ]	(NOTE: Report results of multiple completion on Well Completion or Recompletion Report and Log form.)			

17. DESCRIBE PROPOSED OR COMPLETED OPERATIONS (Clearly state all pertinent details, and give pertinent dates, including estimated date of starting any proposed work. If well is directionally drilled, give subsurface locations and measured and true vertical depths for all markers and zones pertinent to this work.) *

In accordance with the Order issued in Cause No. 203-1, Amoco Production Company herewith designates the W/2 SW/4 (stand-up) as the drilling unit for the subject site.

RECEIVED
DEC 01 1982
DIVISION OF
OIL, GAS & MINING

(approval date: 11/3/82)

18. I hereby certify that the foregoing is true and correct

SIGNED [signature] TITLE Administrative Supervisor DATE 11/23/82

(This space for Federal or State office use)

APPROVED BY _____ TITLE _____ DATE _____

CONDITIONS OF APPROVAL, IF ANY:

*See Instructions on Reverse Side

DIVISION OF OIL, GAS AND MINING

SPUDDING INFORMATION

NAME OF COMPANY: AMOCO PRODUCTION COMPANY

WELL NAME: Amoco Champlin 544 "D" #1

SECTION NWSW q5 TOWNSHIP 3N RANGE 7E COUNTY Summit

DRILLING CONTRACTOR Manning

RIG # 32

SPUDDED: DATE 12-18-82

TIME Noon

HOW Rotary

DRILLING WILL COMMENCE _____

REPORTED BY Butch Quigg

TELEPHONE # _____

DATE 12-20-82 SIGNED RJF

Form OGC-1b

SUBMIT IN TRIPLICATE*
(Other instructions on reverse side)

STATE OF UTAH
DEPARTMENT OF NATURAL RESOURCES
DIVISION OF OIL, GAS, AND MINING

SUNDRY NOTICES AND REPORTS ON WELLS

(Do not use this form for proposals to drill or to deepen or plug back to a different reservoir. Use "APPLICATION FOR PERMIT—" for such proposals.)

5. LEASE DESIGNATION AND SERIAL NO.: Fee

6. IF INDIAN, ALLOTTEE OR TRIBE NAME:

1. OIL WELL [ ] GAS WELL [XX] OTHER

7. UNIT AGREEMENT NAME:

2. NAME OF OPERATOR: AMOCO PRODUCTION COMPANY

8. FARM OR LEASE NAME: Champlin 544 Amoco "D"

3. ADDRESS OF OPERATOR: P.O. Box 17675 Salt Lake City, Utah 84117

9. WELL NO.: #1

4. LOCATION OF WELL (Report location clearly and in accordance with any State requirements.* See also space 17 below.) At surface: 2045' FSL & 1169' FWL

10. FIELD AND POOL, OR WILDCAT: Wildcat

11. SEC., T., R., M., OR BLK. AND SURVEY OR AREA: Sec. 25, T3N, R7E

14. PERMIT NO.: 43-043-30210

15. ELEVATIONS (Show whether DF, RT, GR, etc.): 7556' GR

12. COUNTY OR PARISH: Summit

13. STATE: Utah

16. **Check Appropriate Box To Indicate Nature of Notice, Report, or Other Data**

NOTICE OF INTENTION TO:				SUBSEQUENT REPORT OF:			
TEST WATER SHUT-OFF	[ ]	PULL OR ALTER CASING	[ ]	WATER SHUT-OFF	[ ]	REPAIRING WELL	[ ]
FRACTURE TREAT	[ ]	MULTIPLE COMPLETE	[ ]	FRACTURE TREATMENT	[ ]	ALTERING CASING	[ ]
SHOOT OR ACIDIZE	[ ]	ABANDON*	[ ]	SHOOTING OR ACIDIZING	[ ]	ABANDONMENT*	[ ]
REPAIR WELL	[ ]	CHANGE PLANS	[ ]	(Other) REPORT OF OPERATIONS			[XXX]
(Other)			[ ]	(NOTE: Report results of multiple completion on Well Completion or Recompletion Report and Log form.)			

17. DESCRIBE PROPOSED OR COMPLETED OPERATIONS (Clearly state all pertinent details, and give pertinent dates, including estimated date of starting any proposed work. If well is directionally drilled, give subsurface locations and measured and true vertical depths for all markers and zones pertinent to this work.)*

Spud Date: 12/18/82

Drilling Contractor: Manning #32

Drilling Ahead at 6761' w/12 1/4" bit, reaming & surveying

Casing: 13 3/8" SA 5370'

18. I hereby certify that the foregoing is true and correct

SIGNED [signature] TITLE Administrative Supervisor DATE 2/28/83

(This space for Federal or State office use)

APPROVED BY _____ TITLE _____ DATE _____

CONDITIONS OF APPROVAL, IF ANY:

*See Instructions on Reverse Side

STATE OF UTAH
NATURAL RESOURCES & ENERGY
Oil, Gas & Mining

Scott M. Matheson, Governor
Temple A. Reynolds, Executive Director
Cleon B. Feight, Division Director

4241 State Office Building • Salt Lake City, UT 84114 • 801-533-5771

March 21, 1983

Amoco Production Company
P. O. Box 17675
Salt Lake City, Utah 84117

Re: Well No. Champlin 544 "D" # 1
Sec. 25, T. 3N, R. 7E.
Summit County, Utah
(January 1983- February 1983)

Well No. Champlin 458 Amoco "H" # 1
Sec. 19, T. 4N, R. 8E.
Summit County, Utah
(July 1982- February 1983)

Gentlemen:

Our records indicate that you have not filed the monthly drilling reports for the months indicated above on the subject wells.

Rule C-22, General Rules and Regulations and Rules of Practice and Procedure, requires that said reports be filed on or before the sixteenth (16) day of the succeeding month. This report may be filed on Form OGC-1B, (U.S. Geological Survey Form 9-331) "Sundry Notices and Reports on Wells", or on company forms containing substantially the same information. We are enclosing forms for your convenience.

We will be happy to acknowledge receipt of response to this notice if you will include an extra copy of the transmittal letter with a place for our signature, and a self addressed envelope for the return. Such acknowledgement should avoid unnecessary mailing of a firm second notice from our agency.

Your prompt attention to the above will be greatly appreciated.

Respectfully,

DIVISION OF OIL, GAS AND MINING

Cari Furse

Cari Furse
Well Records Specialist

CF/cf
Enclosure

Board/Charles R. Henderson, Chairman • John L. Bell • E. Steele McIntyre • Edward T. Beck
Robert R. Norman • Margaret R. Bird • Herm Olsen

an equal opportunity employer • please recycle paper

DOUBLE "D" ENTERPRISES
B.O.P. Test Report

B.O.P. TEST PERFORMED ON (DATE) 4-18-83 Ticket 1188

OIL CO: Amoco

WELL NAME & NUMBER Champlin 544-D-1

SECTION 25

TOWNSHIP 3N

RANGE 7E

COUNTY STATE Utah

DRILLING CONTRACTOR Manning #32

INVOICES BILLED FROM: DOUBLE "D" ENTERPRISES, INC.
213 Pine Street
Shoshoni, Wyoming 82649

PHONE NUMBERS: (307) 876-2308, or (307) 876-2234, or 876-9301

TESTED BY: DOUBLE "D" ENTERPRISES, INC.
712 Morse Lee Street
Evanston, Wyoming 82930

PHONE NUMBERS: (307) 789-9213, or (307) 789-9214

OIL CO. SITE REPRESENTATIVE:

RIG TOOL PUSHER:

TESTED OUT OF Evanston

NOTIFIED PRIOR TO TEST:

COPIES OF THIS TEST REPORT SENT COPIES TO:

ORIGINAL CHART & TEST REPORT ON FILE AT: EVANSTON OFFICE

Mike Rhykus (307) 789-7298
Shane McKeown (307) 789-4790
(TESTERS)
Evanston, Wyoming 82930

Company	Lease & Well Name #	Date of Test	Rig #
Amoco	CHAMPLIN 544 D-1	4-18-83	Manning 32

Test #	Time	
	12:10	Got truck loaded
	12:30	Left for location
	3:00	ARRIVED on location
		Rig still tripping
1	3:32	1st manifold valves
2	3:48	2nd manifold valves
3	4:08	Swaco - super choke
4	4:24	Vertical valve and unit
		Rig still tripping - [illegible] equipment on floor so will be ready.
	5:35	Pull wear ring set testing plug
5	6:03	Blinds - inside kill valve - inside manifold
		Link between mud cross & HCR valve
6	6:33	Same test
	6:50	Screw joint back in plug to test pipes
7	7:02	Top pipes - 2nd kill valve 4" check valve
8	7:21	Top pipes - check valve - HCR valve
9	7:39	Lower pipes
10	8:00	Hydrill - vertical valve in manifold
	8:15	Pull plug - Broke subs - set wear ring
11	8:40	Dart valve
12	9:07	Upper kelly
13	9:24	Kelly hose - stand pipe
		Link above 4" on stand pipe pusher
		tries to weld for two hours
		tries again no hold on weld
	11:40	Left location
	1:45	Got to shop filled testing unit up.
	2:00	got home
		Pusher has chart for kelly [illegible]

DOUBLE D
ENTERPRISES
POUNDS PER SQUARE INCH
GC GC-1521 6
NOON
6 PM
MIDNIGHT
6 AM
PRINTED IN U.S.A.

DOUBLE D
ENTERPRISES
POUNDS PER SQUARE INCH
NOON
MIDNIGHT
6 PM
6 AM

Manning 32
4-18-83 Amoco
Champlin 544 D-1

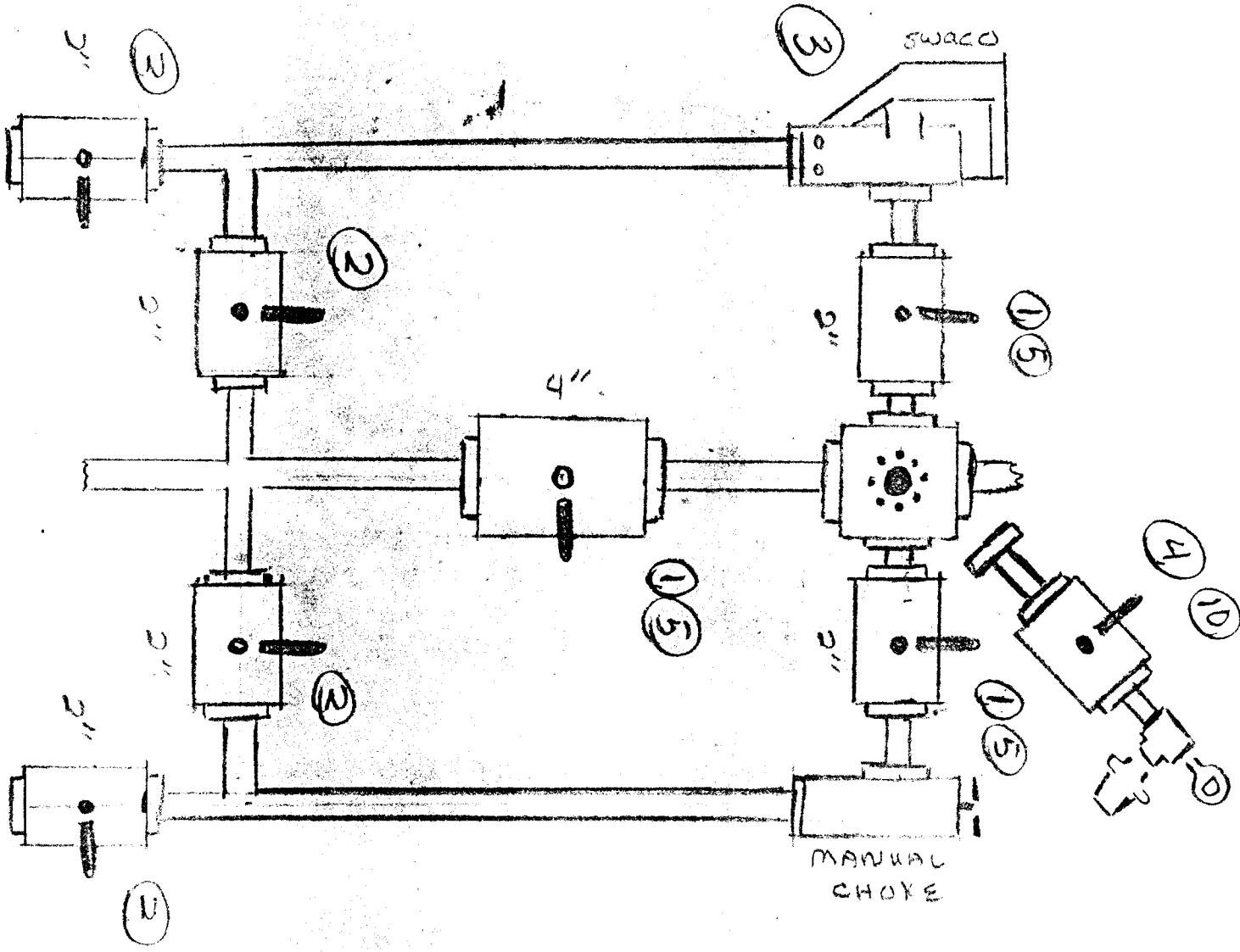

Morning 32
Amoco 4-18-83
Champlin 544 D-1

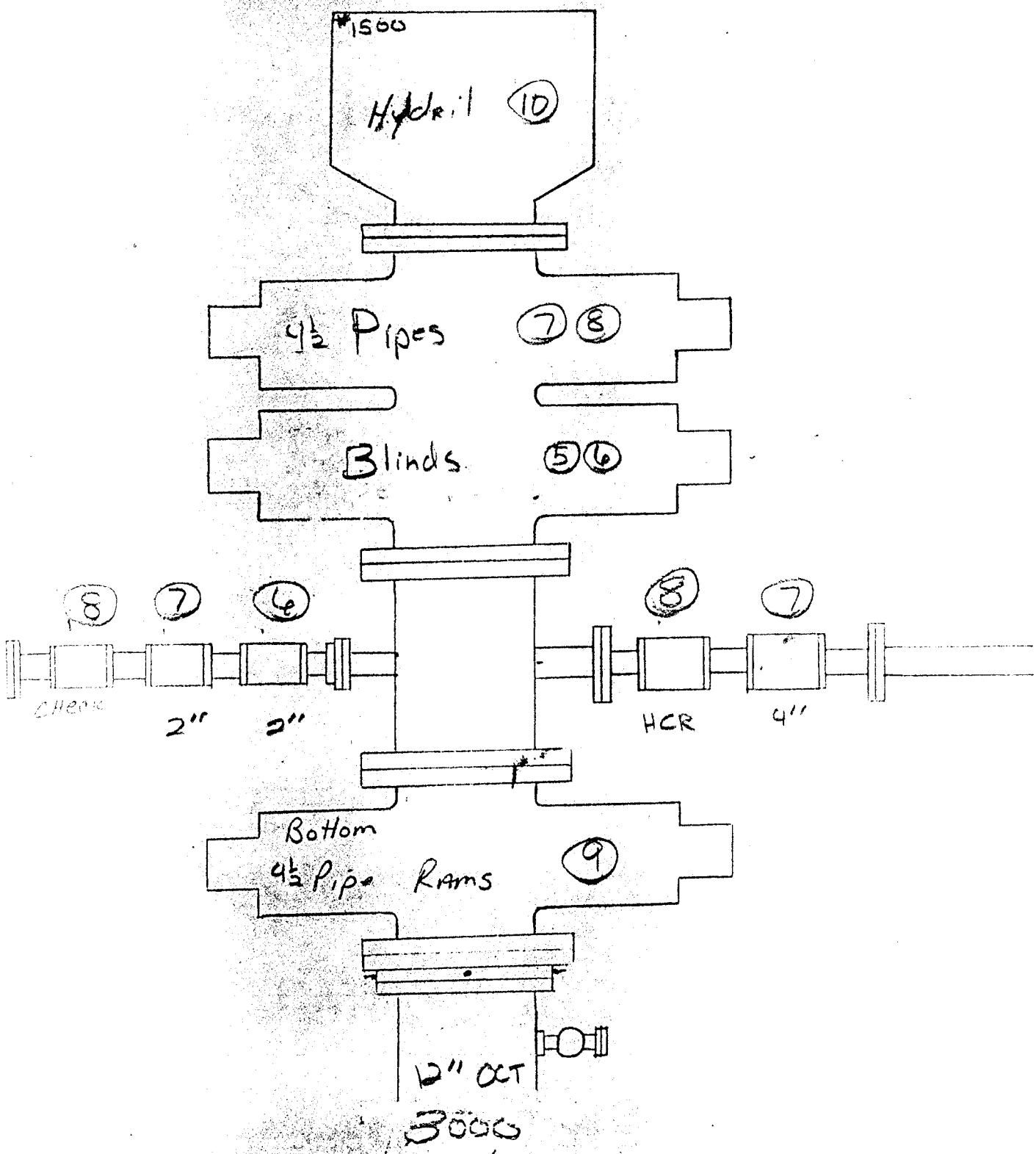

Form OGC-1b

SUBMIT IN TRIPLICATE*
(Other instructions on reverse side)

STATE OF UTAH
DEPARTMENT OF NATURAL RESOURCES
DIVISION OF OIL, GAS, AND MINING

SUNDRY NOTICES AND REPORTS ON WELLS

(Do not use this form for proposals to drill or to deepen or plug back to a different reservoir. Use "APPLICATION FOR PERMIT—" for such proposals.)

5. LEASE DESIGNATION AND SERIAL NO.: FEE

6. IF INDIAN, ALLOTTEE OR TRIBE NAME:

1. OIL WELL [ ] GAS WELL [X] OTHER

7. UNIT AGREEMENT NAME:

2. NAME OF OPERATOR: AMOCO PRODUCTION COMPANY

8. FARM OR LEASE NAME: Champlin 544 Amoco "D"

3. ADDRESS OF OPERATOR: P. O. Box 17675 - Salt Lake City, Utah 84117

9. WELL NO.: #1

4. LOCATION OF WELL (Report location clearly and in accordance with any State requirements.* See also space 17 below.) At surface: 2045' FSL and 1169' FWL

10. FIELD AND POOL, OR WILDCAT: Wildcat

11. SEC., T., R., M., OR BLK. AND SURVEY OR AREA: Sec. 25, T3N, R7E

14. PERMIT NO.: 43-043-30210

15. ELEVATIONS (Show whether DF, RT, GR, etc.): 7556' GR

12. COUNTY OR PARISH: Summit

13. STATE: Utah

16. **Check Appropriate Box To Indicate Nature of Notice, Report, or Other Data**

NOTICE OF INTENTION TO:				SUBSEQUENT REPORT OF:			
TEST WATER SHUT-OFF	[ ]	PULL OR ALTER CASING	[ ]	WATER SHUT-OFF	[ ]	REPAIRING WELL	[ ]
FRACTURE TREAT	[ ]	MULTIPLE COMPLETE	[ ]	FRACTURE TREATMENT	[ ]	ALTERING CASING	[ ]
SHOOT OR ACIDIZE	[ ]	ABANDON*	[ ]	SHOOTING OR ACIDIZING	[ ]	ABANDONMENT*	[ ]
REPAIR WELL	[ ]	CHANGE PLANS	[ ]	(Other) Report of Operations			[X]
(Other)			[ ]	(NOTE: Report results of multiple completion on Well Completion or Recompletion Report and Log form.)			

17. DESCRIBE PROPOSED OR COMPLETED OPERATIONS (Clearly state all pertinent details, and give pertinent dates, including estimated date of starting any proposed work. If well is directionally drilled, give subsurface locations and measured and true vertical depths for all markers and zones pertinent to this work.)*

Drilling ahead at 9799' with 12.25" Bit

Drilling Contractor: R. L. Manning #32E

Spud Date: 12-18-82

RECEIVED
MAY 9 1983
DIV. OF OIL, GAS & MINING

18. I hereby certify that the foregoing is true and correct

SIGNED Larry D. Smith TITLE Staff Admin. Analyst (SG) DATE 4-29-83

(This space for Federal or State office use)

APPROVED BY _____ TITLE _____ DATE _____

CONDITIONS OF APPROVAL, IF ANY:

*See Instructions on Reverse Side

Form OGC-1b

SUBM. IN TRIPLICATE* (Other instructions on reverse side)

STATE OF UTAH
DEPARTMENT OF NATURAL RESOURCES
DIVISION OF OIL, GAS, AND MINING

SUNDRY NOTICES AND REPORTS ON WELLS

(Do not use this form for proposals to drill or to deepen or plug back to a different reservoir. Use "APPLICATION FOR PERMIT—" for such proposals.)

1. OIL WELL [ ] GAS WELL [X] OTHER

2. NAME OF OPERATOR: AMOCO PRODUCTION COMPANY

3. ADDRESS OF OPERATOR: P. O. Box 17675 - Salt Lake City, Utah 84117

4. LOCATION OF WELL (Report location clearly and in accordance with any State requirements.* See also space 17 below.) At surface: 2045' FSL and 1169' FWL

5. LEASE DESIGNATION AND SERIAL NO.: FEE

6. IF INDIAN, ALLOTTEE OR TRIBE NAME:

7. UNIT AGREEMENT NAME:

8. FARM OR LEASE NAME: Champlin 544 Amoco "D"

9. WELL NO.: #1

10. FIELD AND POOL, OR WILDCAT: Wildcat

11. SEC., T., R., M., OR BLK. AND SURVEY OR AREA: Sec. 25, T3N, R7E

14. PERMIT NO.: 43-043-30210

15. ELEVATIONS (Show whether DF, RT, GR, etc.): 7556' GR

12. COUNTY OR PARISH: Summit

13. STATE: Utah

16. **Check Appropriate Box To Indicate Nature of Notice, Report, or Other Data**

NOTICE OF INTENTION TO:				SUBSEQUENT REPORT OF:			
TEST WATER SHUT-OFF	[ ]	PULL OR ALTER CASING	[ ]	WATER SHUT-OFF	[ ]	REPAIRING WELL	[ ]
FRACTURE TREAT	[ ]	MULTIPLE COMPLETE	[ ]	FRACTURE TREATMENT	[ ]	ALTERING CASING	[ ]
SHOOT OR ACIDIZE	[ ]	ABANDON*	[ ]	SHOOTING OR ACIDIZING	[ ]	ABANDONMENT*	[ ]
REPAIR WELL	[ ]	CHANGE PLANS	[ ]	(Other) Report of Past Operations			[X]
(Other)			[ ]	(NOTE: Report results of multiple completion on Well Completion or Recompletion Report and Log form.)			

17. DESCRIBE PROPOSED OR COMPLETED OPERATIONS (Clearly state all pertinent details, and give pertinent dates, including estimated date of starting any proposed work. If well is directionally drilled, give subsurface locations and measured and true vertical depths for all markers and zones pertinent to this work.) *

As requested in March 21, 1983 letter, the following monthly drilling information is provided for your records:

Month	Drilling at
January 16, 1983	4116'
February 16, 1983	5400'

RECEIVED
MAY 10 1983
DIVISION OF
OIL GAS & MINING

18. I hereby certify that the foregoing is true and correct

SIGNED L.L. Smith / TH TITLE Staff Admin. Analyst (SG) DATE

(This space for Federal or State office use)

APPROVED BY TITLE DATE

CONDITIONS OF APPROVAL, IF ANY:

*See Instructions on Reverse Side

Form OGC-1b

SUBMIT IN TRIPLICATE*
(Other instructions on reverse side)

STATE OF UTAH
DEPARTMENT OF NATURAL RESOURCES
DIVISION OF OIL, GAS, AND MINING

SUNDRY NOTICES AND REPORTS ON WELLS

(Do not use this form for proposals to drill or to deepen or plug back to a different reservoir. Use "APPLICATION FOR PERMIT—" for such proposals.)

5. LEASE DESIGNATION AND SERIAL NO.: Fee

6. IF INDIAN, ALLOTTEE OR TRIBE NAME:

7. UNIT AGREEMENT NAME:

1. OIL WELL [ ] GAS WELL [X] OTHER

2. NAME OF OPERATOR: Amoco Production Company

8. FARM OR LEASE NAME: Champlin 544 Amoco "D"

3. ADDRESS OF OPERATOR: P.O. Box 17675 Salt Lake City, Utah 84117

9. WELL NO.: 1

4. LOCATION OF WELL (Report location clearly and in accordance with any State requirements.* See also space 17 below.) At surface: 2045' FSL & 1169' FWL

10. FIELD AND POOL, OR WILDCAT: Wildcat

11. SEC., T., R., M., OR BLK. AND SURVEY OR AREA: Sec. 25, T3N, R7E

14. PERMIT NO.: 43-043-30210

15. ELEVATIONS (Show whether DF, RT, GR, etc.): 7556' GR

12. COUNTY OR PARISH: Summit

13. STATE: Utah

16. **Check Appropriate Box To Indicate Nature of Notice, Report, or Other Data**

NOTICE OF INTENTION TO:				SUBSEQUENT REPORT OF:			
TEST WATER SHUT-OFF	[ ]	PULL OR ALTER CASING	[ ]	WATER SHUT-OFF	[ ]	REPAIRING WELL	[ ]
FRACTURE TREAT	[ ]	MULTIPLE COMPLETE	[ ]	FRACTURE TREATMENT	[ ]	ALTERING CASING	[ ]
SHOOT OR ACIDIZE	[ ]	ABANDON*	[ ]	SHOOTING OR ACIDIZING	[ ]	ABANDONMENT*	[ ]
REPAIR WELL	[ ]	CHANGE PLANS	[ ]	(Other) Report of Operations			[X]
(Other)			[ ]	(NOTE: Report results of multiple completion on Well Completion or Recompletion Report and Log form.)			

17. DESCRIBE PROPOSED OR COMPLETED OPERATIONS (Clearly state all pertinent details, and give pertinent dates, including estimated date of starting any proposed work. If well is directionally drilled, give subsurface locations and measured and true vertical depths for all markers and zones pertinent to this work.) *

Date: 5-16-83

Drilling ahead at 11,050' Set 9 5/8" Casing

RECEIVED
JUN 2 1983
DIV. OF OIL, GAS & MINING

18. I hereby certify that the foregoing is true and correct

SIGNED Lucy L. Smith TITLE Staff Administrative Analyst (SC) DATE 5/27/83

(This space for Federal or State office use)

APPROVED BY _____ TITLE _____ DATE _____

CONDITIONS OF APPROVAL, IF ANY:

*See Instructions on Reverse Side

ORAL APPROVAL TO PLUG ~~AND ABANDON~~ BACK WELL

Operator AMOCO PRODUCTION COMPANY Representative Harold Neal

Well No. 544 D-1 Location NW ¼ SW ¼ Section 25 Township 3N Range 7E

County Summit Field Wildcat State Utah

Unit Name and Required Depth _____ Base of fresh water sands X

✓ T.D. 12,553' Size hole and Fill per sack 8½ " ____ ' Mud Weight and Top _____ #/gal. ____ ' ____

Casing Size	Set At	Top of Cement	To Be Pulled	Plugging Requirements From	To	Sacks Cement
13 3/8"	5370'			1. 100' plug @ bottom of hole w/ 50 sacks		
9 5/8"	11,028'			2. 100' plug @ bottom of 9 5/8" casing w/ 50 sacks		

Formation	Top	Base	Shows
Nugget	12,500'	(±)	

Plug back & SIDETRACK

REMARKS

DST's, lost circulation zones, water zones, etc., 9 5/8" casing collapsed at 10,755' in Salt section. Plan to plug back and side track.

Approved by R. J. Firth Date 6-14-83 Time _____ a.m. p.m.

Form OGC-1b

SUBMIT IN TRIPLICATE*
(Other instructions on reverse side)

STATE OF UTAH
DEPARTMENT OF NATURAL RESOURCES
DIVISION OF OIL, GAS, AND MINING

SUNDRY NOTICES AND REPORTS ON WELLS

(Do not use this form for proposals to drill or to deepen or plug back to a different reservoir. Use "APPLICATION FOR PERMIT—" for such proposals.)

1. OIL WELL [ ] GAS WELL [X] OTHER

2. NAME OF OPERATOR: AMOCO PRODUCTION COMPANY

3. ADDRESS OF OPERATOR: P. O. Box 829, Evanston, Wyoming 82930

4. LOCATION OF WELL (Report location clearly and in accordance with any State requirements.* See also space 17 below.) At surface: 2045' FSL & 1169' FWL

5. LEASE DESIGNATION AND SERIAL NO.: FEE

6. IF INDIAN, ALLOTTEE OR TRIBE NAME:

7. UNIT AGREEMENT NAME:

8. FARM OR LEASE NAME: Champlin 544 Amoco "D"

9. WELL NO.: #1

10. FIELD AND POOL, OR WILDCAT: Wildcat

11. SEC., T., R., M., OR BLK. AND SURVEY OR AREA: Sec. 25, T3N, R7E

14. PERMIT NO.: 43-043-30210

15. ELEVATIONS (Show whether DF, RT, GR, etc.): 7556' GR

12. COUNTY OR PARISH: Summit

13. STATE: Utah

16. **Check Appropriate Box To Indicate Nature of Notice, Report, or Other Data**

NOTICE OF INTENTION TO:				SUBSEQUENT REPORT OF:			
TEST WATER SHUT-OFF	[ ]	PULL OR ALTER CASING	[ ]	WATER SHUT-OFF	[ ]	REPAIRING WELL	[ ]
FRACTURE TREAT	[ ]	MULTIPLE COMPLETE	[ ]	FRACTURE TREATMENT	[ ]	ALTERING CASING	[ ]
SHOOT OR ACIDIZE	[ ]	ABANDON*	[ ]	SHOOTING OR ACIDIZING	[ ]	ABANDONMENT*	[ ]
REPAIR WELL	[ ]	CHANGE PLANS	[ ]	(Other) Report of Operations			[X]
(Other)			[ ]	(NOTE: Report results of multiple completion on Well Completion or Recompletion Report and Log form.)			

17. DESCRIBE PROPOSED OR COMPLETED OPERATIONS (Clearly state all pertinent details, and give pertinent dates, including estimated date of starting any proposed work. If well is directionally drilled, give subsurface locations and measured and true vertical depths for all markers and zones pertinent to this work.)*

June 16, 1983

Current TD - 12,552' in Nugget Formation with 8.5" Bit.

RECEIVED
JUL 7 1983
DIV. OF OIL, GAS & MINING

18. I hereby certify that the foregoing is true and correct

SIGNED Larry L. Smith TITLE Staff Admin. Analyst (SG) DATE 6/29/83

(This space for Federal or State office use)

APPROVED BY _____ TITLE _____ DATE _____

CONDITIONS OF APPROVAL, IF ANY:

*See Instructions on Reverse Side

Utah State

DOUBLE "D" ENTERPRISES

B.O.P. Test Report

B.O.P TEST PERFORMED ON: 7/17/83

OIL CO: Amoco

WELL NAME-&-NUMBER: Champlin 544 D-1

SECTION: 25

TOWNSHIP: 3N

RANGE: 7E

COUNTY: Summit STATE: Utah

DRILLING CONTRACTOR: Manning (32) E

TESTED By: DOUBLE "D" ENTERPRISES, INC.
712 Morse Lee Street
Evanston, Wyoming 82930

PHONE NUMBERS: (307) 789-9213, OR (307) 789-9214

EVANSTON SHOP ADDRESS:
96 WILLOW WAY
SUNSET INDUSTRIAL PARK
EVANSTON, WYOMING 82930

INVOICES BILLED OUT OF:

DOUBLE "D" ENTERPRISES, INC.
P.O. Box 560
Shoshoni, Wyoming 82649

OIL CO. SITE REPRESENTATIVE: Art

RIG TOOL PUSHER:

TESTED OUT OF Evanston OFFICE:

NOTIFIED U.S.G.S (STATE)

COPIES OF THIS TEST REPORT SENT COPIES TO: Oil co. site rep.
U.S.G.S (STATE)

ORIGINAL CHART & TEST REPORT ON FILE AT: Evanston OFFICE

Shane McKeown Phone Number (307) 789-[illegible]
Mike Rykhus Phone Number (307) 789-5162
Evanston, Wyoming 82930

Company	Lease & Well Name #	Date of Test	Rig
Amoco	144-D-1	7/17/83	MAN. 32E

Test #	Time	
	-	Load Truck + travel to Rig
		Rig up + test inside manuals
1	6:30-45	Outside manuals on choke manifold @ 5000 p.s.i.
2	50 - 7:05	inside manuals on choke manifold @ 5000 p.s.i.
3	7:10 - 25	Superchoke @ 5000 p.s.i.
	25 - 8:30	Rig still hooked up on collars
	30 - 40	kelly up - make up subs -
4	45 - 900	lower kelly - @ 5000 p.s.i.
5	9:05 - 20	Upper kelly - @ 5000 p.s.i.
	20 - 40	Rig down kelly - up pipe, subs - fill stack, set plug -
6	45 - 10:00	4½" pipes, inside manuals on B.O.P., H.C.R.
7	10:05 - 20	" " , outside 2" on kill, 4" manual on choke.
8	25 - 40	" " check, riser valve, 3 inside manuals
Annular 9	45 - 11:00	Hydril @ 1500 p.s.i.
	11:00 - 15	Rig up to test blinds - meanwhile crew rigged up 3½" pipe
10	15 - 30	Blinds @ 5000
11	35 - 50	3½ pipes (lower) @ 5000
12	55 - 1:10	Annular - with 3½ pipe @ 1500 p.s.i.
	1:10 - 25	Set wearbushing, Rig down on floor, Rig released from test
13	1:30 A.M.	4½" Dart @ 5000
14		4½" Safety @ 5000
15		3½" Dart @ 5000 } made up on catwalk
16		3½" Safety @ 5000
17	3:00 A.M.	3½" Safety @ 5000

Manning 32
Amoco 7-17-53
Champlin 540 D-1

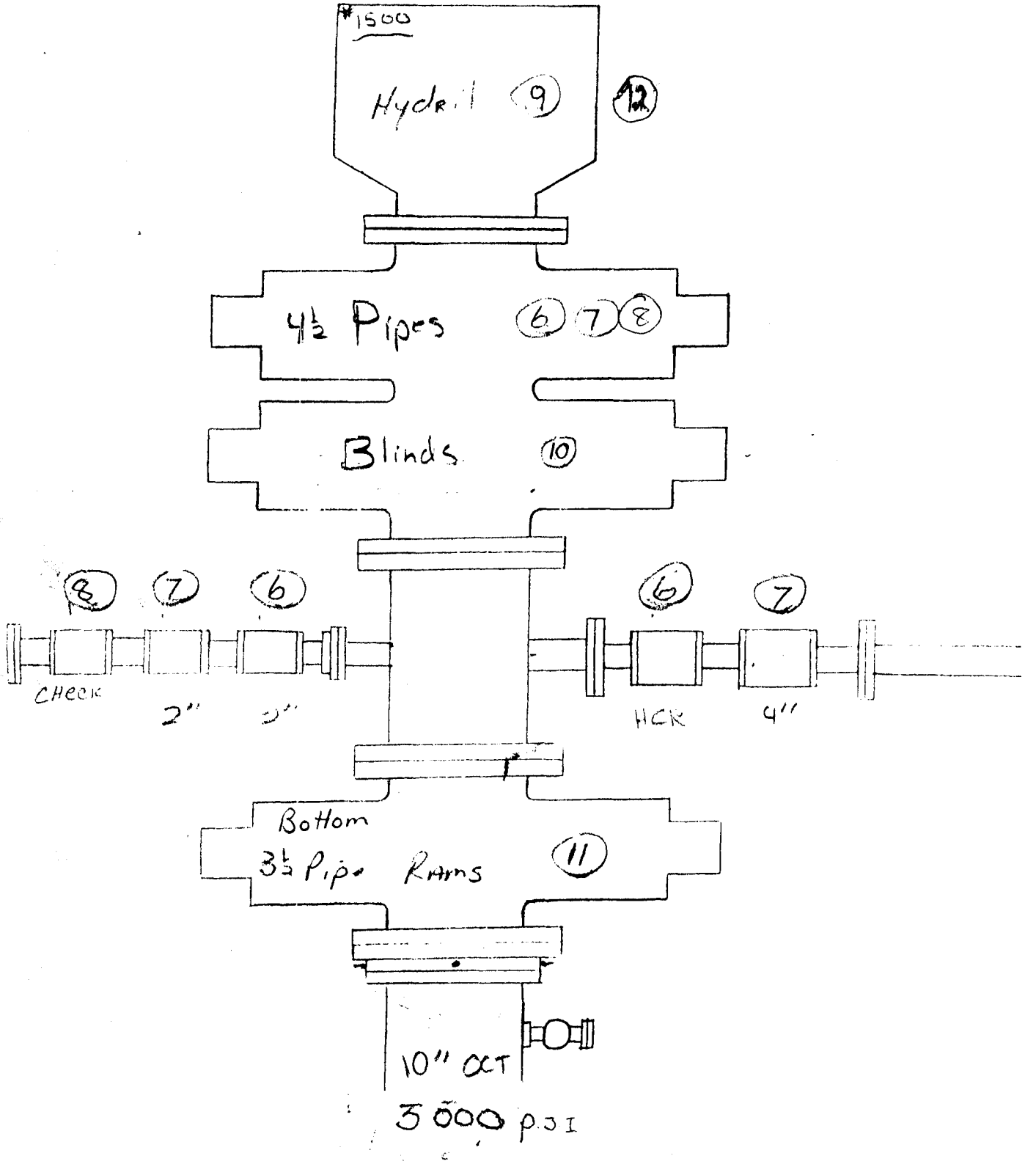

Manning 32
1-83 Amoco
Champlin 544 D-1

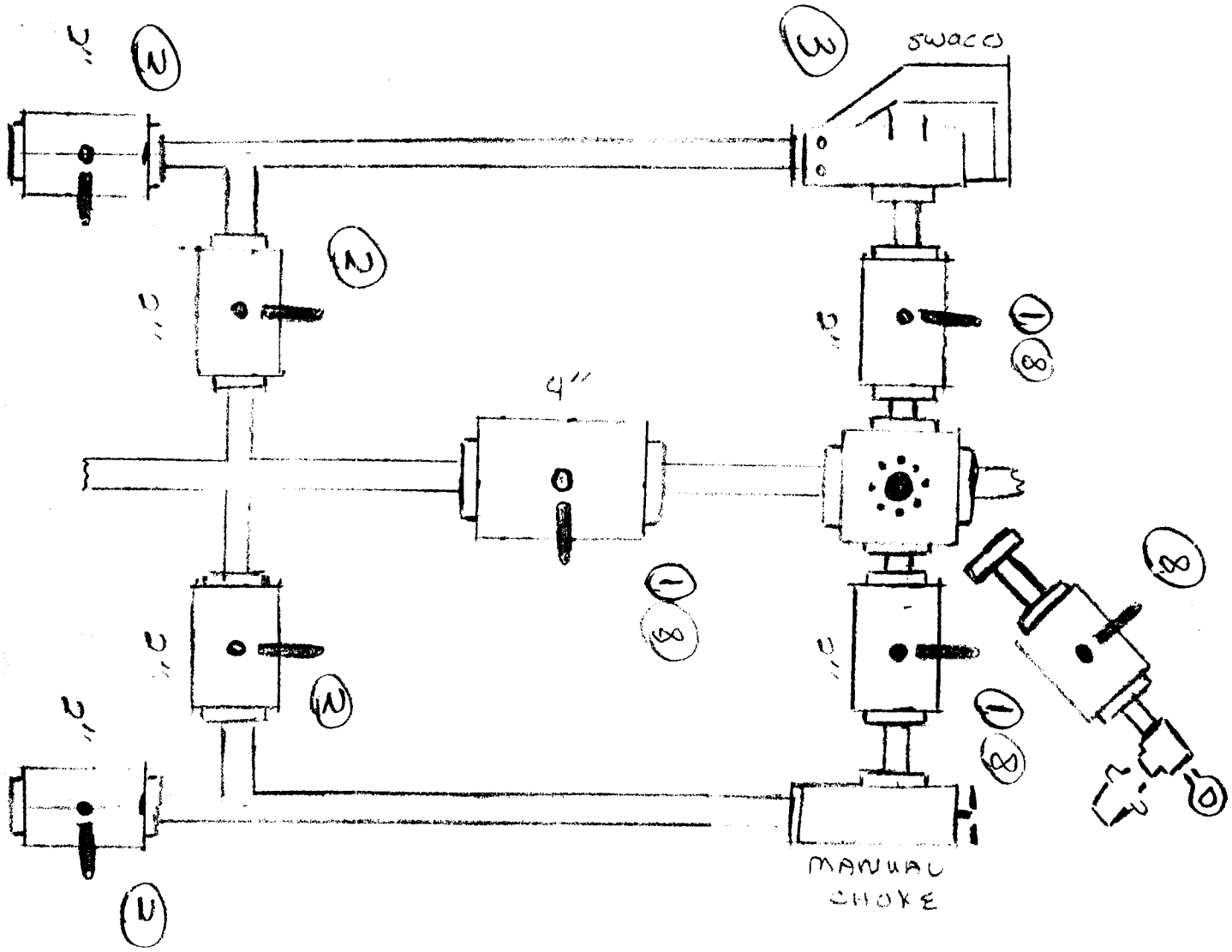

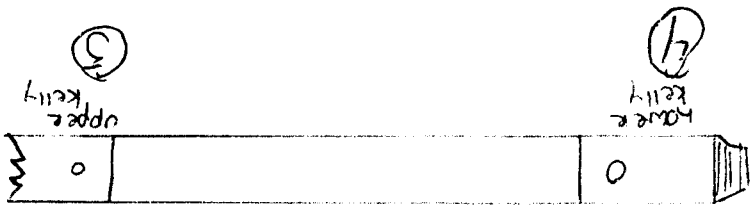

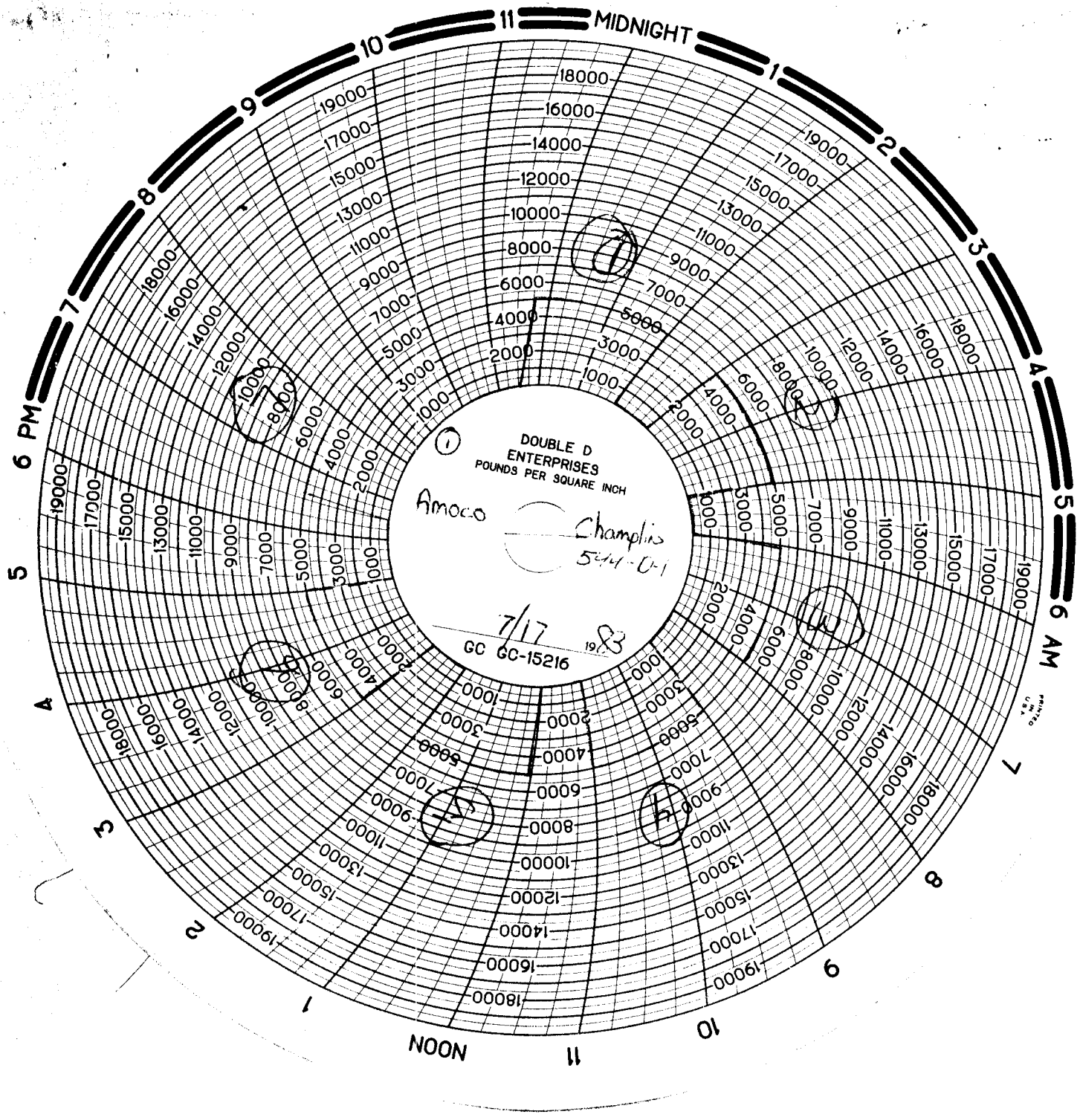
MIDNIGHT
6 AM
NOON
6 PM
DOUBLE D
ENTERPRISES
POUNDS PER SQUARE INCH
Amoco
Champlin
544-D-1
7/17 1983
GC GC-15216

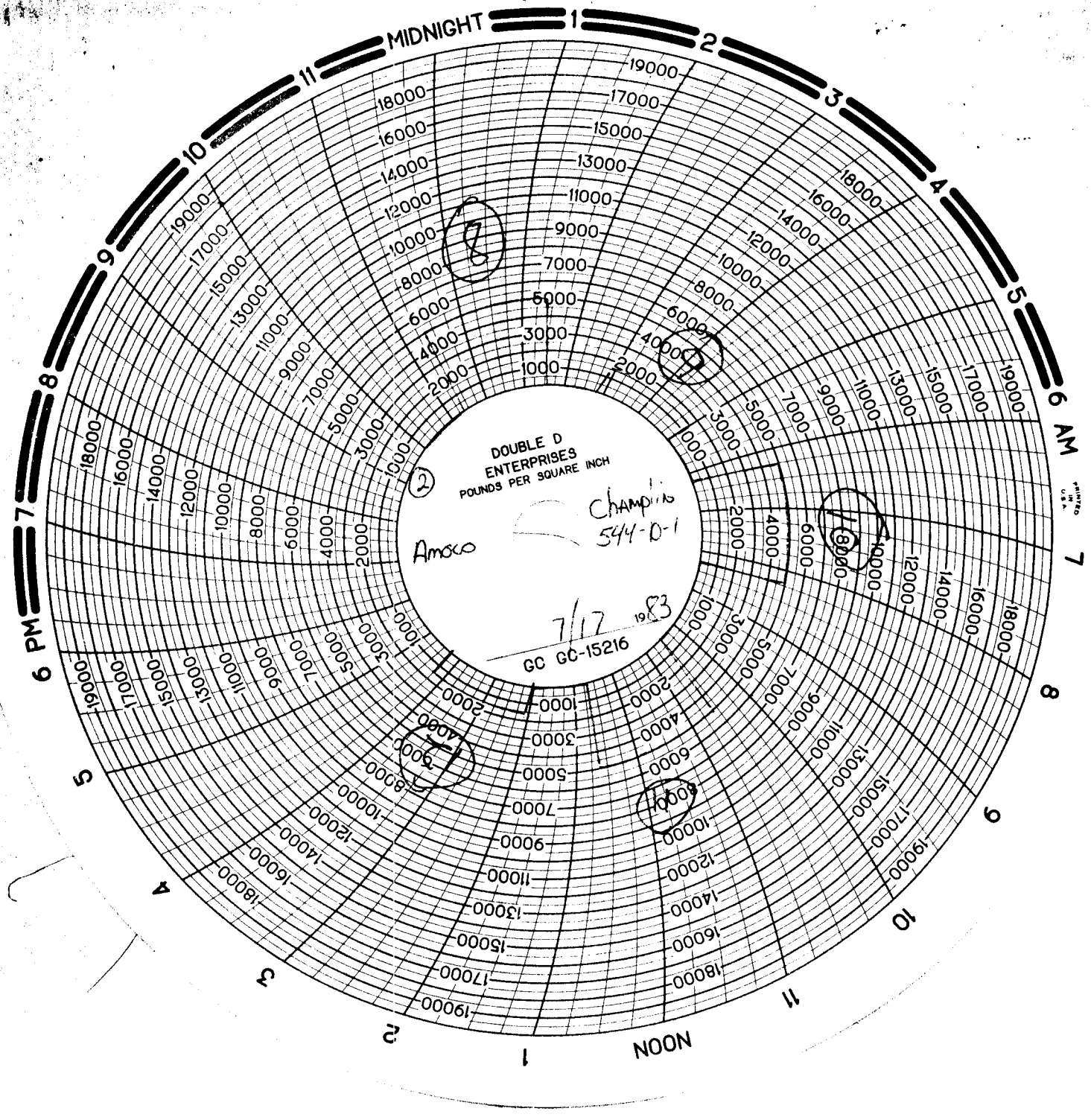
MIDNIGHT
1
2
3
4
5
6 AM
7
8
9
10
11
NOON
1
2
3
4
5
6 PM
7
8
9
10
11
DOUBLE D
ENTERPRISES
POUNDS PER SQUARE INCH
Amoco
Champlin
544-D-1
7/12 1983
GC GC-15216

DOUBLE D
ENTERPRISES
POUNDS PER SQUARE INCH
Amoco
Champlin
544-D
7/17 1983
GC CG-15216
MIDNIGHT
NOON
6 AM
6 PM
PRINTED IN U.S.A.

Form OGC-1b

SUBM N TRIPLICATE*
(Oth. instructions on reverse side)

2 3

STATE OF UTAH
DEPARTMENT OF NATURAL RESOURCES
DIVISION OF OIL, GAS, AND MINING

SUNDRY NOTICES AND REPORTS ON WELLS

(Do not use this form for proposals to drill or to deepen or plug back to a different reservoir. Use "APPLICATION FOR PERMIT—" for such proposals.)

5. LEASE DESIGNATION AND SERIAL NO.: Fee

6. IF INDIAN, ALLOTTEE OR TRIBE NAME:

1. OIL WELL [ ] GAS WELL [X] OTHER

7. UNIT AGREEMENT NAME:

2. NAME OF OPERATOR: Amoco Production Company

8. FARM OR LEASE NAME: Champlin 544 Amoco "D"

3. ADDRESS OF OPERATOR: P.O. Box 829 Evanston, WY 82930

9. WELL NO.: #1

4. LOCATION OF WELL (Report location clearly and in accordance with any State requirements.* See also space 17 below.) At surface: 2045' FSL & 1169' FWL

10. FIELD AND POOL, OR WILDCAT: Wildcat

11. SEC., T., R., M., OR BLK. AND SURVEY OR AREA: Sec. 25, T3N, R7E

14. PERMIT NO.: 43-043-30210

15. ELEVATIONS (Show whether DF, RT, GR, etc.): 7556' GR

12. COUNTY OR PARISH: Summit

13. STATE: Utah

16. **Check Appropriate Box To Indicate Nature of Notice, Report, or Other Data**

NOTICE OF INTENTION TO:				SUBSEQUENT REPORT OF:			
TEST WATER SHUT-OFF	[ ]	PULL OR ALTER CASING	[ ]	WATER SHUT-OFF	[ ]	REPAIRING WELL	[ ]
FRACTURE TREAT	[ ]	MULTIPLE COMPLETE	[ ]	FRACTURE TREATMENT	[ ]	ALTERING CASING	[ ]
SHOOT OR ACIDIZE	[ ]	ABANDON*	[ ]	SHOOTING OR ACIDIZING	[ ]	ABANDONMENT*	[ ]
REPAIR WELL	[ ]	CHANGE PLANS	[ ]	(Other) Report of Operations			[X]
(Other)			[ ]	(NOTE: Report results of multiple completion on Well Completion or Recompletion Report and Log form.)			

17. DESCRIBE PROPOSED OR COMPLETED OPERATIONS (Clearly state all pertinent details, and give pertinent dates, including estimated date of starting any proposed work. If well is directionally drilled, give subsurface locations and measured and true vertical depths for all markers and zones pertinent to this work.)*

Date: July 15, 1983

Current TD: 11,118' Twin Creek Formation

Drilling ahead with 8.5' Bit

RECEIVED
JUL 28 1983
DIV. OF OIL, GAS & MINING

18. I hereby certify that the foregoing is true and correct

SIGNED Larry L. Smith TITLE Staff Admin. Analyst (SG) DATE 7/25/83

(This space for Federal or State office use)

APPROVED BY _____ TITLE _____ DATE _____

CONDITIONS OF APPROVAL, IF ANY:

*See Instructions on Reverse Side

Form OGC-1b

SUBMIT IN TRIPLICATE*
(Other instructions on reverse side)

STATE OF UTAH
DEPARTMENT OF NATURAL RESOURCES
DIVISION OF OIL, GAS, AND MINING

SUNDRY NOTICES AND REPORTS ON WELLS

(Do not use this form for proposals to drill or to deepen or plug back to a different reservoir. Use "APPLICATION FOR PERMIT—" for such proposals.)

1. OIL WELL [ ] GAS WELL [X] OTHER

2. NAME OF OPERATOR: AMOCO PRODUCTION COMPANY

3. ADDRESS OF OPERATOR: ~~DRAWER 829~~ EVANSTON, WY 82930

4. LOCATION OF WELL (Report location clearly and in accordance with any State requirements.* See also space 17 below.) At surface: 2045' FSL & 1169' FWL

5. LEASE DESIGNATION AND SERIAL NO.: Fee

6. IF INDIAN, ALLOTTEE OR TRIBE NAME:

7. UNIT AGREEMENT NAME:

8. FARM OR LEASE NAME: Champlin 544 Amoco "D"

9. WELL NO.: #1

10. FIELD AND POOL, OR WILDCAT: Wildcat

11. SEC., T., R., M., OR BLK. AND SURVEY OR AREA: Sec. 25, T3N, R7E

14. PERMIT NO.: 43-043-30210

15. ELEVATIONS (Show whether DF, RT, GR, etc.): 7556' GR

12. COUNTY OR PARISH: Summit

13. STATE: Utah

16. **Check Appropriate Box To Indicate Nature of Notice, Report, or Other Data**

NOTICE OF INTENTION TO:				SUBSEQUENT REPORT OF:			
TEST WATER SHUT-OFF	[ ]	PULL OR ALTER CASING	[ ]	WATER SHUT-OFF	[ ]	REPAIRING WELL	[ ]
FRACTURE TREAT	[ ]	MULTIPLE COMPLETE	[ ]	FRACTURE TREATMENT	[ ]	ALTERING CASING	[ ]
SHOOT OR ACIDIZE	[ ]	ABANDON*	[ ]	SHOOTING OR ACIDIZING	[ ]	ABANDONMENT*	[ ]
REPAIR WELL	[ ]	CHANGE PLANS	[ ]	(Other) Report of Operatons			[X]
(Other)			[ ]	(NOTE: Report results of multiple completion on Well Completion or Recompletion Report and Log form.)			

17. DESCRIBE PROPOSED OR COMPLETED OPERATIONS (Clearly state all pertinent details, and give pertinent dates, including estimated date of starting any proposed work. If well is directionally drilled, give subsurface locations and measured and true vertical depths for all markers and zones pertinent to this work.)*

August 24, 1983

Cuurent TD: 13,131'

Drilling in Nugget formation with 5.875" Bit

18. I hereby certify that the foregoing is true and correct

SIGNED R. J. Alvarez TITLE Staff Admin. Analyst (SG) DATE 8-30-83

(This space for Federal or State office use)

APPROVED BY _____ TITLE _____ DATE _____

CONDITIONS OF APPROVAL, IF ANY:

*See Instructions on Reverse Side

Form OGC-1b

SUBMIT IN TRIPLICATE*
(Other instructions on reverse side)

21

STATE OF UTAH
DEPARTMENT OF NATURAL RESOURCES
DIVISION OF OIL, GAS, AND MINING

SUNDRY NOTICES AND REPORTS ON WELLS

(Do not use this form for proposals to drill or to deepen or plug back to a different reservoir. Use "APPLICATION FOR PERMIT—" for such proposals.)

1. OIL WELL [ ] GAS WELL [X] OTHER

2. NAME OF OPERATOR: Amoco Production Company

3. ADDRESS OF OPERATOR: P.O. Box 829, Evanston, Wyoming 82930

4. LOCATION OF WELL (Report location clearly and in accordance with any State requirements.* See also space 17 below.) At surface: 2045' FSL & 1169' FWL

5. LEASE DESIGNATION AND SERIAL NO.: FEE

6. IF INDIAN, ALLOTTEE OR TRIBE NAME:

7. UNIT AGREEMENT NAME:

8. FARM OR LEASE NAME: Champlin 544 D

9. WELL NO.: #1

10. FIELD AND POOL, OR WILDCAT: Wildcat

11. SEC., T., R., M., OR BLK. AND SURVEY OR AREA: SEc. 25, T3N, R7E

14. PERMIT NO.: 43-043-30210

15. ELEVATIONS (Show whether DF, RT, GR, etc.): 7556' GR

12. COUNTY OR PARISH: Summit

13. STATE: Utah

16. Check Appropriate Box To Indicate Nature of Notice, Report, or Other Data

NOTICE OF INTENTION TO:				SUBSEQUENT REPORT OF:			
TEST WATER SHUT-OFF	[ ]	PULL OR ALTER CASING	[ ]	WATER SHUT-OFF	[ ]	REPAIRING WELL	[ ]
FRACTURE TREAT	[ ]	MULTIPLE COMPLETE	[ ]	FRACTURE TREATMENT	[ ]	ALTERING CASING	[ ]
SHOOT OR ACIDIZE	[ ]	ABANDON*	[ ]	SHOOTING OR ACIDIZING	[ ]	ABANDONMENT*	[ ]
REPAIR WELL	[ ]	CHANGE PLANS	[ ]	(Other) Report of Operations			[X]
(Other)			[ ]	(NOTE: Report results of multiple completion on Well Completion or Recompletion Report and Log form.)			

17. DESCRIBE PROPOSED OR COMPLETED OPERATIONS (Clearly state all pertinent details, and give pertinent dates, including estimated date of starting any proposed work. If well is directionally drilled, give subsurface locations and measured and true vertical depths for all markers and zones pertinent to this work.)*

Sept. 13, 1983

Current TD 13,130

7 in. casing testing in Nugget zone.

RECEIVED
SEP 27 1983
DIV. OF OIL, GAS & MINING

18. I hereby certify that the foregoing is true and correct

SIGNED Larry L Smith TITLE Staff Admin Analyst (SC) DATE 9/23/83

(This space for Federal or State office use)

APPROVED BY _____ TITLE _____ DATE _____

CONDITIONS OF APPROVAL, IF ANY:

*See Instructions on Reverse Side

a report
by

PENGO PRESSURE & TESTING SYSTEMS

FOR

AMOCO

TABLE OF CONTENTS

COVER PAGE	A
HEADER PAGE	B
TABLE OF CONTENTS	C
WELL DATA PAGE	D
JOB EVENTS	E
PP&TS	F

going in well	1
flowing well	1-2
build up	2-5
gradeints stops	5-6
flowing well	6-9

BEST COPY
AVAILABLE

PENGO PRESSURE & TESTING SYSTEMS

126 COMMERCE, EVANSTON
(307)-789-7654

COMPUTERIZED ELECTRONIC DATA GATHERING SYSTEMS FOR RESERVOIR EVALUATIONS

COMPANY: AMOCO
FIELD: WILDCAT
COUNTY: SUMMIT
COMPANY DISTRICT: EVANSTON

WELL#: 544 D-1

TEST DATE 09/25/83
LEASE: CHAMPLIN/AMOCO
STATE: UTAH
COMP. ENG: RED WOODRUFF

WELL TYPE: OIL GAS
TUBING SIZE: ~~[illegible]~~ 2 7/8"
PACKER DEPTH: 12536 ft.

ELEVATION: ~~7040.3~~ 7129' KB ft.
TUBING END 12543 ft.
PERFORATIONS ~~N/A~~ 12602'-683' OA

SURFACE CASING: N/A
PRODUCTION: 12849
LINER: N/A

SEQUENCE OF EVENTS

DATE 09/25/83 PAGE E

PENGO WIRELINE of WYOIMIG arrived on location 544 D-1 to run bottom hole temperature pressure test.
Rigged up Pengo and went to bottom of well. Set pressure and temperature tool at setting depth of 12560 feet.
Well was flowing for about three days prior to going in well.
Well was shut in at 10000 feet then opened back when tools were at setting depth. Well was then flowed for 6 hours before well was shut in.
Shut in time 00:00:40 09/26/83. Total shut in time of build was 12 hours 17 minuts and 20 seconds. Tool moved to 12000 11000 and 10000 feet for pressure gradeint stops.
Tool was then set back at 12560 feet then opened on 30/64 choke
Well samples were then taken.
End of test pulled pressure temperature tools out of well.
Rig down Pengo .

COLLAR LOG

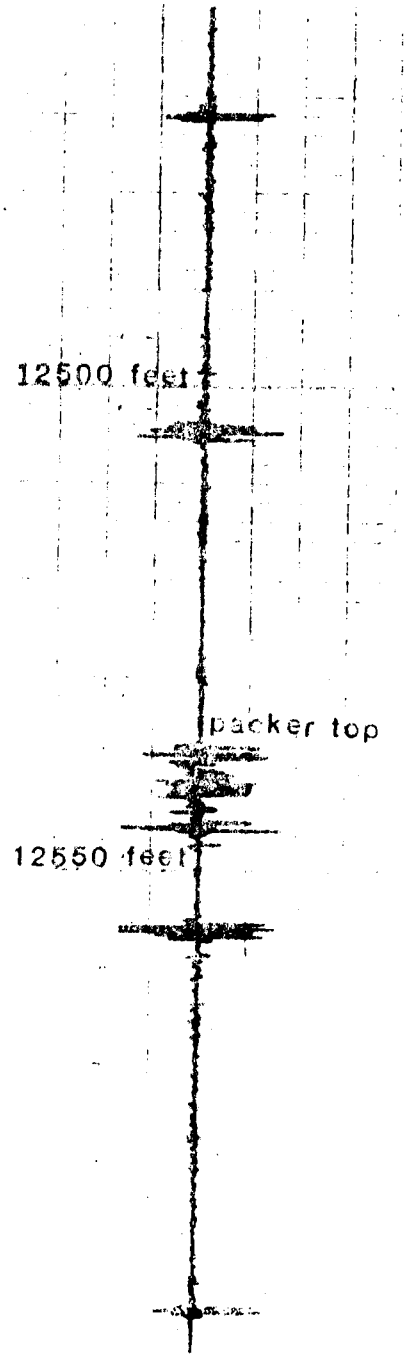

Real time	Elapse time	choke	delta 0	delta	Bottom Press.	Bottom Temp.	Tree Press.	Tree Temp.
16:35:00	0:00:00	0	1182.06	2516.06	2516.06	196.7	1624.83	82.5
16:40:00	0:05:00	0	2035.13	853.07	3369.13	203.9	2158.54	79.3
PICK UP AT 10500ft. 1075 pounds								
16:45:00	0:10:00	0	2660.77	625.64	3994.77	208.6	2549.57	77.9
16:50:00	0:15:00	0	3099.40	438.63	4433.40	213.3	2798.19	77.0
16:55:00	0:20:00	0	3308.19	208.79	4642.19	216.0	2937.58	77.4
17:00:00	0:25:00	0	3421.35	113.16	4755.35	217.4	3014.72	76.0
PICK UP AT 12590ft. 1200 pounds								
17:05:00	0:30:00	0	3475.10	53.75	4809.10	216.8	3059.03	76.2
17:10:00	0:35:00	0	3513.43	38.33	4847.43	217.6	3086.74	75.6
17:15:00	0:40:00	0	3525.93	12.50	4859.93	217.4	3106.15	75.1
17:20:00	0:45:00	0	3546.39	20.46	4880.39	217.5	3119.96	74.6
AT SETTING DEPTH WITH TEMP. PRESS. 12560ft.								
17:30:00	0:55:00	0	3411.63	-134.76	4745.63	216.3	2932.34	75.1
Opening well								
Reset elapse time								
17:40:00	0:00:00	24	-548.67	-549.30	4196.33	216.8	2360.23	78.7
17:50:00	0:10:00	24	-1077.67	-529.00	3667.33	216.6	1902.54	79.3
Changing choke size								
Changing choke size								
18:00:00	0:20:00	30	-1575.29	-497.62	3169.71	214.8	1547.72	79.5
18:10:00	0:30:00	30	-1745.25	-169.96	2999.75	213.8	1449.25	80.8
18:20:00	0:40:00	30	-1827.88	-82.63	2917.12	213.2	1409.45	80.4
18:30:00	0:50:00	30	-1875.99	-48.11	2869.01	212.7	1385.31	80.1
19:00:00	1:20:00	30	-1945.11	-69.12	2799.89	212.1	1352.29	77.1
19:30:00	1:50:00	30	-1967.14	-22.03	2777.86	211.8	1339.44	77.9
20:00:00	2:20:00	30	-1972.98	-5.84	2772.02	211.7	1336.89	76.8
20:30:00	2:50:00	30	-1976.31	-3.33	2768.69	211.7	1335.41	77.3
21:00:00	3:20:00	30	-1980.17	-3.86	2764.83	211.7	1333.90	78.5
21:30:00	3:50:00	30	-1980.58	-.41	2764.42	211.7	1333.25	79.2
22:00:00	4:20:00	30	-1977.34	3.24	2767.66	211.7	1334.74	79.4
22:30:00	4:50:00	30	-1976.53	.81	2768.47	211.7	1334.86	77.8
23:00:00	5:20:00	30	-1976.59	-.06	2768.41	211.7	1334.45	78.6
23:30:00	5:50:00	30	-1974.53	2.06	2770.47	211.7	1334.63	78.0
23:58:20	6:18:20	30	-1973.08	1.45	2771.92	211.8	1335.52	78.2
23:58:30	6:18:30	30	-1973.01	.07	2771.99	211.8	1335.50	78.2
23:58:40	6:18:40	30	-1973.06	-.05	2771.94	211.8	1335.58	78.3
23:58:50	6:18:50	30	-1972.96	.10	2772.04	211.8	1335.58	78.3
23:59:00	6:19:00	30	-1973.02	-.06	2771.98	211.8	1335.52	78.3
23:59:10	6:19:10	30	-1973.01	.01	2771.99	211.8	1335.58	78.2
23:59:20	6:19:20	30	-1973.01	0.00	2771.99	211.8	1335.55	78.2

Real time	Elapse time	choke	delta 0	delta	Bottom Press.	Bottom Temp.	Tree Press.	Tree Temp.
23:59:30	6:19:30	30	-1973.02	-.01	2771.98	211.8	1335.67	78.1
Shutting in well								
00:00:00	6:20:00	0	-1973.14	-.12	2771.86	211.8	1335.55	78.1
00:00:10	6:20:10	0	-1973.00	.14	2772.00	211.8	1335.62	78.2
00:00:20	6:20:20	0	-1973.07	-.07	2771.93	211.8	1364.27	78.2
Reset elapse time								
00:00:40	0:00:00	0	.96	1.03	2772.96	211.8	1502.27	78.3
00:00:50	0:00:10	0	8.68	7.72	2780.68	211.9	1535.75	78.1
00:01:00	0:00:20	0	23.03	14.35	2795.03	212.0	1564.39	77.9
00:01:10	0:00:30	0	43.32	20.29	2815.32	212.2	1590.10	77.7
00:01:20	0:00:40	0	66.92	23.60	2838.92	212.5	1614.00	77.4
00:01:30	0:00:50	0	90.64	23.72	2862.64	212.6	1635.34	77.1
00:01:40	0:01:00	0	117.28	26.64	2889.28	212.8	1658.71	76.8
00:01:50	0:01:10	0	144.66	27.38	2916.66	213.0	1678.81	76.5
00:02:00	0:01:20	0	172.20	27.54	2944.20	213.2	1699.86	76.3
00:02:10	0:01:30	0	200.11	27.91	2972.11	213.3	1720.42	76.1
00:02:20	0:01:40	0	227.79	27.68	2999.79	213.5	1742.04	75.9
00:02:30	0:01:50	0	255.47	27.68	3027.47	213.6	1760.78	75.7
00:02:40	0:02:00	0	282.97	27.50	3054.97	213.8	1780.60	75.5
00:02:50	0:02:10	0	310.45	27.48	3082.45	213.9	1800.22	75.3
00:03:00	0:02:20	0	337.71	27.26	3109.71	214.1	1819.56	75.2
00:03:10	0:02:30	0	364.96	27.25	3136.96	214.2	1839.92	75.0
00:03:20	0:02:40	0	391.78	26.82	3163.78	214.3	1857.73	74.9
00:03:30	0:02:50	0	418.36	26.58	3190.36	214.5	1876.41	74.8
00:03:40	0:03:00	0	445.94	27.58	3217.94	214.6	1895.02	74.7
00:03:50	0:03:10	0	470.78	24.84	3242.78	214.7	1914.62	74.6
00:04:00	0:03:20	0	496.64	25.86	3268.64	214.9	1932.80	74.6
00:04:10	0:03:30	0	522.28	25.64	3294.28	215.0	1950.92	74.5
00:04:20	0:03:40	0	547.70	25.42	3319.70	215.1	1967.62	74.3
00:04:30	0:03:50	0	572.70	25.00	3344.70	215.2	1985.36	74.1
00:04:40	0:04:00	0	597.53	24.83	3369.53	215.3	2004.12	74.0
00:04:50	0:04:10	0	622.24	24.71	3394.24	215.4	2021.43	73.8
00:05:00	0:04:20	0	646.67	24.43	3418.67	215.9	2038.58	73.7
00:05:10	0:04:30	0	670.90	24.23	3442.90	215.6	2055.51	73.5
00:05:20	0:04:40	0	694.78	23.88	3466.78	215.7	2072.45	73.4
00:05:30	0:04:50	0	718.43	23.65	3490.43	215.8	2089.10	73.2
00:05:40	0:05:00	0	741.59	23.16	3513.59	215.9	2105.59	73.0
00:05:50	0:05:10	0	764.47	22.88	3536.47	216.0	2121.82	72.9
00:06:00	0:05:20	0	787.06	22.59	3559.06	216.1	2137.95	72.7
00:06:10	0:05:30	0	809.45	22.39	3581.45	216.2	2153.98	72.6
00:06:20	0:05:40	0	831.47	22.02	3603.47	216.3	2170.78	72.5
00:06:30	0:05:50	0	853.24	21.77	3625.24	216.4	2186.38	72.4
00:06:40	0:06:00	0	874.94	21.70	3646.94	216.5	2201.80	72.3
00:06:50	0:06:10	0	896.28	21.34	3668.28	216.6	2217.02	72.2
00:07:00	0:06:20	0	917.38	21.10	3689.38	216.7	2233.10	72.1
00:07:10	0:06:30	0	938.29	20.91	3710.29	216.7	2248.12	72.1
00:07:20	0:06:40	0	958.72	20.43	3730.72	216.8	2261.94	72.0
00:07:30	0:06:50	0	979.08	20.36	3751.08	216.9	2276.55	71.9
00:07:40	0:07:00	0	999.04	19.96	3771.04	217.0	2290.93	71.8
00:07:50	0:07:10	0	1018.83	19.79	3790.83	217.0	2306.15	71.8
00:08:00	0:07:20	0	1038.38	19.55	3810.38	217.1	2320.15	71.7

Real time	Elapse time	choke	delta 0	delta	Bottom Press.	Bottom Temp.	Tree Press.	Tree Temp.
00:08:10	0:07:30	0	1056.54	18.16	3828.54	217.2	2333.11	71.6
00:08:20	0:07:40	0	1075.66	19.12	3847.66	217.2	2347.85	71.6
00:08:30	0:07:50	0	1094.57	18.91	3866.57	217.3	2361.46	71.6
00:08:40	0:08:00	0	1113.13	18.56	3885.13	217.3	2374.93	71.5
00:09:00	0:08:20	0	1149.35	36.22	3921.35	217.5	2401.24	71.3
00:09:10	0:08:30	0	1167.09	17.74	3939.09	217.5	2414.99	71.3
00:09:20	0:08:40	0	1184.45	17.36	3956.45	217.6	2427.73	71.2
00:09:30	0:08:50	0	1201.65	17.20	3973.65	217.6	2440.32	71.1
00:09:40	0:09:00	0	1218.45	16.80	3990.45	217.7	2452.69	71.1
00:09:50	0:09:10	0	1235.07	16.62	4007.07	217.7	2465.63	71.0
00:10:00	0:09:20	0	1251.42	16.35	4023.42	217.8	2477.74	71.0
00:10:10	0:09:30	0	1267.49	16.07	4039.49	217.8	2489.57	71.0
00:10:20	0:09:40	0	1283.44	15.95	4055.44	217.9	2501.31	71.0
00:10:30	0:09:50	0	1299.10	15.66	4071.10	217.9	2512.80	70.9
00:10:40	0:10:00	0	1313.36	14.26	4085.36	217.9	2524.12	70.9
00:11:00	0:10:20	0	1343.43	30.07	4115.43	218.0	2546.28	70.8
00:11:30	0:10:50	0	1386.39	42.96	4158.39	218.1	2579.05	70.5
00:12:00	0:11:20	0	1427.71	41.32	4199.71	218.2	2610.01	70.5
00:12:30	0:11:50	0	1466.06	38.35	4238.06	218.3	2638.79	70.3
00:13:00	0:12:20	0	1502.23	36.17	4274.23	218.3	2666.63	70.3
00:13:30	0:12:50	0	1536.37	34.14	4308.37	218.4	2692.48	70.3
00:14:00	0:13:20	0	1569.58	33.21	4341.58	218.4	2717.40	70.1
00:14:30	0:13:50	0	1599.99	30.41	4371.99	218.5	2740.99	70.0
00:15:00	0:14:20	0	1628.76	28.77	4400.76	218.5	2762.69	69.9
00:15:30	0:14:50	0	1655.77	27.01	4427.77	218.6	2784.03	69.6
00:16:00	0:15:20	0	1681.17	25.40	4453.17	218.6	2803.22	69.5
00:16:30	0:15:50	0	1704.96	23.79	4476.96	218.6	2821.56	69.3
00:17:00	0:16:20	0	1727.36	22.40	4499.36	218.7	2838.48	69.2
00:17:30	0:16:50	0	1748.26	20.90	4520.26	218.7	2854.71	69.1
00:18:00	0:17:20	0	1768.14	19.88	4540.14	218.7	2870.00	68.9
00:18:30	0:17:50	0	1787.23	19.09	4559.23	218.7	2884.30	68.8
00:19:00	0:18:20	0	1804.90	17.67	4576.90	218.7	2898.08	68.6
00:19:30	0:18:50	0	1821.41	16.51	4593.41	218.7	2910.56	68.4
00:20:00	0:19:20	0	1836.99	15.58	4608.99	218.7	2922.41	68.3
00:20:30	0:19:50	0	1851.63	14.64	4623.63	218.7	2933.78	68.2
00:21:00	0:20:20	0	1865.60	13.97	4637.60	218.7	2944.29	68.1
00:21:30	0:20:50	0	1878.56	12.96	4650.56	218.7	2954.12	68.0
00:22:00	0:21:20	0	1890.90	12.34	4662.90	218.7	2963.62	67.9
00:22:30	0:21:50	0	1902.59	11.69	4674.59	218.7	2972.50	67.7
00:23:00	0:22:20	0	1913.63	11.04	4685.63	218.7	2980.78	67.6
00:23:30	0:22:50	0	1924.17	10.54	4696.17	218.7	2988.93	67.5
00:24:00	0:23:20	0	1934.10	9.93	4706.10	218.7	2996.43	67.3
00:24:30	0:23:50	0	1943.58	9.48	4715.58	218.7	3003.58	67.2
00:25:00	0:24:20	0	1952.39	8.81	4724.39	218.7	3010.28	67.1
00:25:30	0:24:50	0	1960.84	8.45	4732.84	218.6	3016.47	66.9
00:26:00	0:25:20	0	1968.57	7.73	4740.57	218.6	3022.58	66.8
00:26:30	0:25:50	0	1976.01	7.44	4748.01	218.6	3028.07	66.6
00:27:00	0:26:20	0	1983.22	7.21	4755.22	218.6	3033.52	66.4
00:27:30	0:26:50	0	1989.96	6.74	4761.96	218.6	3038.40	66.2
00:28:00	0:27:20	0	1996.47	6.51	4768.47	218.6	3043.34	66.1
00:28:30	0:27:50	0	2002.45	5.98	4774.45	218.6	3047.84	65.9
00:29:00	0:28:20	0	2008.17	5.72	4780.17	218.5	3052.16	65.7
00:29:30	0:28:50	0	2013.66	5.49	4785.66	218.5	3056.17	65.5
00:30:00	0:29:20	0	2019.00	5.34	4791.00	218.5	3059.98	65.4
00:30:30	0:29:50	0	2023.83	4.83	4795.83	218.5	3063.72	65.2

Real time	Elapse time	choke	delta 0	delta	Bottom Press.	Bottom Temp.	Tree Press.	Tree Temp.
00:31:00	0:30:20	0	2028.55	4.72	4800.55	218.5	3067.00	65.1
00:32:00	0:31:20	0	2037.15	8.60	4809.15	218.5	3073.33	64.8
00:33:00	0:32:20	0	2044.74	7.59	4816.74	218.4	3078.96	64.7
00:34:00	0:33:20	0	2052.05	7.31	4824.05	218.4	3084.28	64.5
00:35:00	0:34:20	0	2058.55	6.50	4830.55	218.4	3088.96	64.4
00:36:00	0:35:20	0	2064.40	5.85	4836.40	218.3	3093.28	64.2
00:37:00	0:36:20	0	2070.16	5.76	4842.16	218.3	3097.31	64.1
00:38:00	0:37:20	0	2075.53	5.37	4847.53	218.3	3101.23	63.6
00:39:00	0:38:20	0	2080.53	5.00	4852.53	218.3	3104.80	63.1
00:40:00	0:39:20	0	2085.31	4.78	4857.31	218.3	3108.21	63.2
00:41:00	0:40:20	0	2089.65	4.34	4861.65	218.2	3111.36	63.2
00:42:00	0:41:20	0	2093.87	4.22	4865.87	218.2	3114.39	63.0
00:43:00	0:42:20	0	2098.45	4.58	4870.45	218.2	3117.61	62.8
00:44:00	0:43:20	0	2102.89	4.44	4874.89	218.2	3120.82	62.7
00:45:00	0:44:20	0	2106.78	3.89	4878.78	218.2	3123.58	62.3
00:46:00	0:45:20	0	2110.30	3.52	4882.30	218.2	3126.06	62.0
00:47:00	0:46:20	0	2113.54	3.24	4885.54	218.2	3128.30	61.9
00:48:00	0:47:20	0	2116.61	3.07	4888.61	218.1	3130.44	61.6
00:49:00	0:48:20	0	2119.40	2.79	4891.40	218.1	3132.33	61.5
00:50:00	0:49:20	0	2121.93	2.53	4893.93	218.1	3134.18	61.3
00:51:00	0:50:20	0	2124.57	2.64	4896.57	218.1	3135.89	61.1
00:52:00	0:51:20	0	2126.85	2.28	4898.85	218.1	3137.46	60.8
00:53:00	0:52:20	0	2129.13	2.28	4901.13	218.0	3138.97	60.7
00:54:00	0:53:20	0	2131.21	2.08	4903.21	218.0	3140.31	60.5
00:55:00	0:54:20	0	2132.97	1.76	4904.97	218.0	3141.61	60.3
00:56:00	0:55:20	0	2134.95	1.98	4906.95	218.0	3142.86	60.2
00:57:00	0:56:20	0	2136.72	1.77	4908.72	218.0	3143.99	60.0
00:58:00	0:57:20	0	2138.30	1.58	4910.30	218.0	3145.08	59.9
00:59:00	0:58:20	0	2139.87	1.57	4911.87	218.0	3146.12	59.8
01:00:00	0:59:20	0	2141.47	1.60	4913.47	218.0	3147.13	59.6
01:01:00	1:00:20	0	2142.84	1.37	4914.84	218.0	3148.08	59.4
01:10:00	1:09:20	0	2153.42	10.58	4925.42	217.8	3154.95	58.3
01:20:00	1:19:20	0	2161.45	8.03	4933.45	217.8	3160.79	56.9
01:30:00	1:29:20	0	2167.31	5.86	4939.31	217.9	3164.22	56.1
01:40:00	1:39:20	0	2171.30	3.99	4943.30	217.9	3166.46	55.4
01:50:00	1:49:20	0	2174.62	3.32	4946.62	218.0	3168.12	54.7
02:00:00	1:59:20	0	2176.97	2.35	4948.97	218.0	3169.22	54.1
02:10:00	2:09:20	0	2179.01	2.04	4951.01	218.1	3169.85	53.6
02:20:00	2:19:20	0	2180.55	1.54	4952.55	218.1	3170.22	53.2
02:30:00	2:29:20	0	2181.85	1.30	4953.85	218.2	3170.40	52.9
02:40:00	2:39:20	0	2183.13	1.28	4955.13	218.3	3170.36	52.6
02:50:00	2:49:20	0	2183.86	.73	4955.86	218.4	3170.14	52.4
03:00:00	2:59:20	0	2184.71	.85	4956.71	218.4	3169.96	52.1
03:10:00	3:09:20	0	2185.16	.45	4957.16	218.5	3169.65	51.9
03:20:00	3:19:20	0	2185.57	.41	4957.57	218.6	3169.26	51.5
03:30:00	3:29:20	0	2186.09	.52	4958.09	218.6	3168.71	51.5
03:40:00	3:39:20	0	2186.57	.48	4958.57	219.0	3168.31	50.9
03:50:00	3:49:20	0	2186.82	.25	4958.82	218.7	3167.74	50.7
04:00:00	3:59:20	0	2187.20	.38	4959.20	218.8	3167.13	50.5
04:10:00	4:09:20	0	2187.61	.41	4959.61	218.8	3166.65	50.2
04:20:00	4:19:20	0	2187.76	.15	4959.76	218.8	3166.21	49.7
04:30:00	4:29:20	0	2188.01	.25	4960.01	218.9	3165.86	49.3
04:40:00	4:39:20	0	2188.19	.18	4960.19	219.0	3165.30	48.9
04:50:00	4:49:20	0	2188.37	.18	4960.37	219.0	3164.84	48.4
05:10:00	5:09:20	0	2188.81	.44	4960.81	218.9	3164.24	47.7

Real time	Elapse time	choke	delta 0	delta	Bottom Press.	Bottom Temp.	Tree Press.	Tree Temp.
05:20:00	5:19:20	0	2188.79	-.02	4960.79	218.9	3163.92	47.4
05:30:00	5:29:20	0	2189.12	.33	4961.12	219.0	3163.45	47.3
05:40:00	5:39:20	0	2189.14	.02	4961.14	219.0	3163.36	46.8
05:50:00	5:49:20	0	2189.19	.05	4961.19	219.0	3163.31	46.7
06:00:00	5:59:20	0	2189.35	.16	4961.35	219.1	3163.03	46.9
06:10:00	6:09:20	0	2189.59	.24	4961.59	219.1	3162.85	46.9
06:20:00	6:19:20	0	2189.55	-.04	4961.55	219.2	3162.69	47.1
06:30:00	6:29:20	0	2189.65	.10	4961.65	219.2	3162.60	47.0
06:40:00	6:39:20	0	2189.85	.20	4961.85	219.2	3162.59	47.1
06:50:00	6:49:20	0	2189.81	-.04	4961.81	219.2	3162.56	47.3
07:00:00	6:59:20	0	2189.79	-.02	4961.79	219.6	3162.54	47.2
07:10:00	7:09:20	0	2189.88	.09	4961.88	219.3	3162.42	47.4
07:20:00	7:19:20	0	2189.83	-.05	4961.83	219.4	3162.22	47.8
07:30:00	7:29:20	0	2190.02	.19	4962.02	219.4	3162.17	47.7
07:40:00	7:39:20	0	2190.11	.09	4962.11	219.4	3161.91	48.1
07:50:00	7:49:20	0	2190.19	.08	4962.19	219.5	3161.97	48.4
08:00:00	7:59:20	0	2190.29	.10	4962.29	219.5	3162.09	48.8
08:10:00	8:09:20	0	2190.51	.22	4962.51	219.8	3161.86	49.1
08:20:00	8:19:20	0	2190.30	-.21	4962.30	219.6	3162.09	49.4
08:30:00	8:29:20	0	2190.60	.30	4962.60	219.6	3161.31	50.6
09:00:00	8:59:20	0	2190.56	-.04	4962.56	219.7	3164.59	52.8
09:30:00	9:29:20	0	2190.65	.09	4962.65	219.8	3163.57	55.1
10:00:00	9:59:20	0	2190.77	.12	4962.77	219.8	3163.14	58.2
10:30:00	10:29:20	0	2190.92	.15	4962.92	219.9	3166.03	60.4
11:00:00	10:59:20	0	2191.00	.08	4963.00 ✓	220.0 ✓	3164.61	62.2
END OF TEST PULL TEMP PRESS TOOL UP HOLE								
11:11:00	11:10:20	0	2095.10	-95.90	4867.10	212.3	3164.37	62.7
TEMP PRESS TOOL SETTING AT 12000 feet								
11:12:00	11:11:20	0	2096.17	1.07	4868.17	212.2	3164.32	62.8
11:13:00	11:12:20	0	2098.53	2.36	4870.53	212.2	3164.26	62.8
11:14:00	11:13:20	0	2101.24	2.71	4873.24	212.2	3164.16	62.9
11:15:00	11:14:20	0	2103.52	2.28	4875.52	212.2	3164.15	63.0
11:16:00	11:15:20	0	2105.67	2.15	4877.67	212.2	3164.14	63.0
11:17:00	11:16:20	0	2107.35	1.68	4879.35	212.2	3164.09	63.2
11:18:00	11:17:20	0	2109.05	1.70	4881.05	212.1	3164.07	63.2
11:19:00	11:18:20	0	2110.26	1.21	4882.26	212.1	3164.06	63.3
11:20:00	11:19:20	0	2111.26	1.00	4883.26	212.2	3164.07	63.3
11:21:00	11:20:20	0	2112.29	1.03	4884.29	212.2	3164.11	63.3
11:22:00	11:21:20	0	2113.04	.75	4885.04	212.2	3164.21	63.4
11:23:00	11:22:20	0	2113.49	.45	4885.49	212.2	3164.28	63.6
11:24:00	11:23:20	0	2114.11	.62	4886.11	212.2	3164.32	63.7
11:25:00	11:24:20	0	2114.41	.30	4886.41	212.2	3164.32	63.8
11:26:00	11:25:20	0	2114.60	.19	4886.60	212.2	3164.31	63.9
PULLING TOOLS UP HOLE								
11:36:00	11:35:20	0	1943.41	-171.19	4715.41	199.2	3164.62	64.4
TEMP PRESS TOOL SETTING AT 11000 feet								
11:37:00	11:36:20	0	1942.60	-.81	4714.60	199.3	3164.59	64.5

Real time	Elapse time	choke	delta 0	delta	Bottom Press.	Bottom Temp.	Tree Press.	Tree Temp.
11:38:00	11:37:20	0	1945.45	2.85	4717.45	199.3	3164.58	64.5
11:39:00	11:38:20	0	1948.74	3.29	4720.74	199.2	3164.57	64.6
11:40:00	11:39:20	0	1951.81	3.07	4723.81	199.2	3164.54	64.6
11:41:00	11:40:20	0	1954.70	2.89	4726.70	199.2	3164.55	64.5
11:42:00	11:41:20	0	1957.10	2.40	4729.10	199.2	3164.61	64.6
11:43:00	11:42:20	0	1957.10	2.00	4731.10	199.1	3164.69	64.7
11:44:00	11:43:20	0	1960.95	1.85	4732.95	199.1	3164.64	64.8
11:45:00	11:44:20	0	1962.20	1.25	4734.20	199.1	3164.52	64.9
11:46:00	11:45:20	0	1963.35	1.15	4735.35	199.1	3164.39	65.2
11:47:00	11:46:20	0	1964.23	.88	4736.23	199.1	3164.28	65.3
11:48:00	11:47:20	0	1965.10	.87	4737.10	199.1	3164.22	65.3
11:49:00	11:48:20	0	1965.83	.73	4737.83	199.1	3164.20	65.4
11:50:00	11:49:20	0	1966.35	.52	4738.35	199.1	3164.21	65.5
11:51:00	11:50:20	0	1966.71	.36	4738.71	199.1	3164.30	65.6
11:52:00	11:51:20	0	1966.95	.24	4738.95	199.1	3164.40	65.6
11:53:00	11:52:20	0	1967.26	.31	4739.26	199.1	3164.49	65.6
PULLING TOOLS UP HOLE								
12:00:00	11:59:20	0	1848.95	-118.31	4620.95	192.1	3165.83	65.9
12:03:00	12:02:20	0	1795.30	-53.65	4567.30	188.7	3165.47	65.9
TEMP PRESS TOOL SETTING AT 10000 feet								
12:04:00	12:03:20	0	1795.27	-.03	4567.27	188.7	3165.49	66.0
12:05:00	12:04:20	0	1796.91	1.64	4568.91	188.7	3165.55	66.1
12:06:00	12:05:20	0	1799.00	2.09	4571.00	188.7	3165.56	66.0
12:07:00	12:06:20	0	1800.72	1.72	4572.72	188.6	3165.57	66.0
12:08:00	12:07:20	0	1802.38	1.66	4574.38	188.6	3165.53	66.2
12:09:00	12:08:20	0	1803.80	1.42	4575.80	188.7	3165.42	66.4
12:10:00	12:09:20	0	1804.84	1.04	4576.84	188.7	3165.29	66.4
12:11:00	12:10:20	0	1805.88	1.04	4577.88	188.6	3165.19	66.4
12:12:00	12:11:20	0	1806.56	.68	4578.56	188.6	3165.14	66.4
12:13:00	12:12:20	0	1807.15	.59	4579.15	188.6	3165.10	66.4
12:14:00	12:13:20	0	1807.72	.57	4579.72	188.6	3165.05	66.4
12:15:00	12:14:20	0	1808.16	.44	4580.16	188.6	3165.02	66.5
12:16:00	12:15:20	0	1808.37	.21	4580.37	188.6	3164.92	66.5
12:17:00	12:16:20	0	1808.71	.34	4580.71	188.6	3164.75	66.8
12:18:00	12:17:20	0	1808.79	.08	4580.79	188.6	3164.47	66.9
END OF GRADEINT GOING DOWN HOLE								
12:30:00	12:29:20	0	2218.69	409.90	4990.69	215.3	3162.91	67.8
TEMP PRESS BACK AT SETTING DEPTH 12560 ft.								
12:40:00	12:39:20	0	2211.16	-7.53	4983.16	220.1	3167.14	68.1
12:46:20	12:45:40	0	2197.25	-13.91	4969.25	220.2	3166.53	69.1
Opening well								
12:46:40	12:46:00	30	2196.72	-.53	4968.72	220.2	3166.53	69.1
12:46:50	12:46:10	30	2196.80	.08	4968.80	220.2	3166.52	69.1
12:47:00	12:46:20	30	2196.49	-.31	4968.49	220.2	3166.49	69.2
12:47:10	12:46:30	30	2196.51	.02	4968.51	220.2	3166.49	69.2

Real time	Elapse time	choke	delta 0	delta	Bottom Press.	Bottom Temp.	Tree Press.	Tree Temp.
12:47:20	12:46:40	30	2196.25	-.26	4968.25	220.2	3166.50	69.2
Shutting in well								
12:47:40	12:47:00	0	2195.95	-.30	4967.95	220.2	3166.49	69.3
12:49:00	12:48:20	0	2195.02	-.93	4967.02	220.2	3166.40	69.2
12:50:00	12:49:20	0	2194.38	-.64	4966.38	220.2	3166.35	69.1
Opening well								
12:51:00	12:50:20	24	2193.46	-.92	4965.46	220.6	3165.80	69.3
12:52:00	12:51:20	24	2113.31	-80.15	4885.31	219.9	2962.88	67.9
Reset elapse time								
12:53:00	0:00:00	24	-70.42	10.27	4895.58	219.6	3099.22	64.1
12:54:00	0:01:00	24	-94.81	-24.39	4871.19	219.3	3036.11	63.2
12:54:30	0:01:30	24	-125.58	-30.77	4840.42	218.9	3007.99	63.4
12:55:00	0:02:00	24	-147.96	-22.38	4818.04	218.7	2989.29	64.2
12:55:30	0:02:30	24	-165.35	-17.39	4800.65	218.6	2973.66	65.3
12:56:00	0:03:00	24	-180.91	-15.56	4785.09	218.6	2961.47	66.4
12:56:30	0:03:30	24	-232.20	-51.29	4733.80	218.3	2825.14	67.5
12:57:00	0:04:00	24	-304.34	-72.14	4661.66	217.9	2762.37	68.5
12:57:30	0:04:30	24	-375.76	-71.42	4590.24	217.8	2640.97	69.2
12:58:00	0:05:00	24	-452.15	-76.39	4513.85	217.6	2579.64	69.7
12:58:30	0:05:30	24	-513.61	-61.46	4452.39	217.7	2528.09	70.0
12:59:00	0:06:00	24	-566.02	-52.41	4399.98	217.9	2474.97	70.3
12:59:30	0:06:30	24	-616.21	-50.19	4349.79	217.9	2427.31	70.5
13:00:00	0:07:00	24	-664.13	-47.92	4301.87	218.0	2383.90	70.6
13:00:30	0:07:30	24	-707.68	-43.55	4258.32	218.1	2346.71	70.6
13:01:00	0:08:00	24	-747.68	-40.00	4218.32	218.2	2313.77	70.6
13:01:30	0:08:30	24	-784.34	-36.66	4181.66	218.3	2284.69	70.7
13:02:00	0:09:00	24	-820.98	-36.64	4145.02	218.3	2198.30	70.8
13:02:30	0:09:30	24	-876.72	-55.74	4089.28	218.2	2140.76	70.9
13:03:00	0:10:00	24	-931.61	-54.89	4034.39	218.1	2097.97	71.1
13:03:30	0:10:30	24	-980.24	-48.63	3985.76	218.1	2061.07	71.2
13:04:00	0:11:00	24	-1024.67	-44.43	3941.33	218.1	2028.99	71.1
13:04:30	0:11:30	24	-1064.47	-39.80	3901.53	218.1	1999.68	71.1
13:05:00	0:12:00	24	-1101.25	-36.78	3864.75	218.1	1968.94	71.0
13:05:30	0:12:30	24	-1137.10	-35.85	3828.90	218.1	1914.32	71.1
13:06:00	0:13:00	24	-1177.40	-40.30	3788.60	218.0	1875.86	71.1
13:06:30	0:13:30	24	-1216.03	-38.63	3749.97	217.9	1848.22	71.2
13:07:00	0:14:00	24	-1252.27	-36.24	3713.73	217.9	1826.27	71.4
13:07:30	0:14:30	24	-1284.10	-31.83	3681.90	217.8	1809.76	71.5
13:08:00	0:15:00	24	-1314.38	-30.28	3651.62	217.9	1802.18	71.7
13:08:30	0:15:30	24	-1339.32	-24.94	3626.68	217.8	1788.37	71.7
13:09:00	0:16:00	24	-1365.51	-26.19	3600.49	217.7	1788.95	71.8
13:09:30	0:16:30	24	-1390.13	-24.62	3575.87	217.7	1785.53	71.9
13:10:00	0:17:00	24	-1412.93	-22.80	3553.07	217.6	1780.32	72.0
13:10:30	0:17:30	24	-1434.59	-21.66	3531.41	217.6	1769.05	72.2
13:11:00	0:18:00	24	-1456.12	-21.53	3509.88	216.2	1757.31	72.1
13:11:30	0:18:30	24	-1477.31	-21.19	3488.69	217.5	1744.44	72.1
13:12:00	0:19:00	24	-1497.90	-20.59	3468.10	217.4	1733.96	72.1
13:12:30	0:19:30	24	-1517.03	-19.13	3448.97	217.3	1723.80	72.1
13:13:00	0:20:00	24	-1535.28	-18.25	3430.72	217.3	1715.76	72.1

Real time	Elapse time	choke	delta 0	delta	Bottom Press.	Bottom Temp.	Tree Press.	Tree Temp.
13:13:30	0:20:30	24	-1552.93	-17.65	3413.07	217.2	1703.50	72.1
13:14:00	0:21:00	24	-1569.90	-16.97	3396.10	217.2	1698.91	72.0
13:14:30	0:21:30	24	-1585.44	-15.54	3380.56	217.1	1687.83	72.1
13:15:00	0:22:00	24	-1600.93	-15.49	3365.07	217.1	1679.04	72.4
13:15:30	0:22:30	24	-1615.78	-14.85	3350.22	217.0	1673.25	72.3
13:16:00	0:23:00	24	-1629.06	-13.28	3336.94	217.0	1665.39	72.3
13:16:30	0:23:30	24	-1641.51	-12.45	3324.49	216.9	1654.39	72.4
13:17:00	0:24:00	24	-1653.87	-12.36	3312.13	216.8	1643.02	72.4
13:17:30	0:24:30	24	-1667.01	-13.14	3298.99	216.8	1634.98	72.3
13:18:00	0:25:00	24	-1679.60	-12.59	3286.40	216.8	1628.02	72.2
13:18:30	0:25:30	24	-1691.58	-11.98	3274.42	216.7	1620.73	72.2
13:19:00	0:26:00	24	-1703.41	-11.83	3262.59	216.6	1612.36	72.3
13:19:30	0:26:30	24	-1715.12	-11.71	3250.88	216.6	1604.54	72.4
13:20:00	0:27:00	24	-1726.32	-11.20	3239.68	216.5	1598.93	72.5
13:20:30	0:27:30	24	-1737.10	-10.78	3228.90	216.5	1591.59	72.7
13:21:00	0:28:00	24	-1747.21	-10.11	3218.79	216.4	1586.43	72.7
13:21:30	0:28:30	24	-1756.98	-9.77	3209.02	216.4	1579.29	72.7
13:22:00	0:29:00	24	-1766.84	-9.86	3199.16	216.3	1573.66	72.8
13:22:30	0:29:30	24	-1775.80	-8.96	3190.20	216.3	1569.18	72.8
13:23:00	0:30:00	24	-1784.22	-8.42	3181.78	216.2	1564.20	72.6
13:24:00	0:31:00	24	-1801.05	-16.83	3164.95	216.1	1554.44	72.5
13:25:00	0:32:00	24	-1817.18	-16.13	3148.82	216.0	1545.31	72.2
13:26:00	0:33:00	24	-1832.82	-15.64	3133.18	215.9	1538.32	72.3
13:27:00	0:34:00	24	-1845.18	-12.36	3120.82	215.9	1528.20	72.8
13:28:00	0:35:00	24	-1859.33	-14.15	3106.67	215.8	1520.15	72.7
13:29:00	0:36:00	24	-1871.58	-12.25	3094.42	215.7	1512.40	72.9
13:30:00	0:37:00	24	-1885.12	-13.54	3080.88	215.6	1507.37	73.0
13:31:00	0:38:00	24	-1895.00	-9.88	3071.00	215.5	1501.63	72.7
13:32:00	0:39:00	24	-1905.05	-10.05	3060.95	215.5	1496.25	72.6
13:33:00	0:40:00	24	-1914.89	-9.84	3051.11	215.4	1491.14	72.8
13:34:00	0:41:00	24	-1924.54	-9.65	3041.46	215.3	1486.02	72.8
13:35:00	0:42:00	24	-1933.95	-9.41	3032.05	215.3	1481.39	72.8
13:36:00	0:43:00	24	-1942.67	-8.72	3023.33	215.2	1475.50	72.8
13:37:00	0:44:00	24	-1951.11	-8.44	3014.89	215.1	1470.30	72.9
13:38:00	0:45:00	24	-1959.10	-7.99	3006.90	215.1	1464.59	73.1
13:39:00	0:46:00	24	-1968.39	-9.29	2997.61	215.0	1459.50	73.2
13:40:00	0:47:00	24	-1975.10	-6.71	2990.90	214.9	1453.86	73.4
13:50:00	0:57:00	24	-2034.49	-59.39	2931.51	214.5	1418.28	73.4
14:00:00	1:07:00	24	-2075.38	-40.89	2890.62	214.1	1394.02	74.6
14:10:00	1:17:00	24	-2106.47	-31.09	2859.53	213.8	1373.42	74.7
14:20:00	1:27:00	24	-2122.74	-16.27	2843.26	213.6	1366.43	76.0
14:30:00	1:37:00	24	-2134.03	-11.29	2831.97	213.5	1361.73	76.4
14:40:00	1:47:00	24	-2140.11	-6.08	2825.89	213.4	1357.76	76.4
14:50:00	1:57:00	24	-2144.99	-4.88	2821.01	213.4	1355.91	76.1
15:00:00	2:07:00	24	-2150.37	-5.38	2815.63	213.3	1354.48	76.5
15:10:00	2:17:00	24	-2149.98	.39	2816.02	213.2	1353.75	76.2
15:20:00	2:27:00	24	-2153.83	-3.85	2812.17	213.2	1352.11	77.5
15:30:00	2:37:00	24	-2157.87	-4.04	2808.13	213.2	1350.75	77.5
15:40:00	2:47:00	24	-2160.02	-2.15	2805.98	213.1	1349.32	76.4
15:50:00	2:57:00	24	-2162.26	-2.24	2803.74	213.1	1347.49	78.3
16:00:00	3:07:00	24	-2162.03	.23	2803.97	213.1	1348.06	77.7
16:10:00	3:17:00	24	-2162.83	-.80	2803.17	213.0	1347.73	77.4
16:20:00	3:27:00	24	-2163.01	-.18	2802.99	213.0	1348.27	77.9
16:30:00	3:37:00	24	-2163.65	-.64	2802.35	213.0	1348.05	77.5
16:40:00	3:47:00	24	-2164.60	-.95	2801.40	213.0	1347.84	77.0

Real time	Elapse time	choke	delta 0	delta	Bottom Press.	Bottom Temp.	Tree Press.	Tree Temp.
16:50:00	3:57:00	24	-2164.53	.07	2801.47	213.0	1347.79	77.3
17:00:00	4:07:00	24	-2164.61	-.08	2801.39	213.0	1347.71	77.3
17:10:00	4:17:00	24	-2163.75	.66	2802.25	213.0	1347.52	77.1
17:20:00	4:27:00	24	-2162.71	1.04	2803.29	213.0	1348.85	76.2
17:30:00	4:37:00	24	-2160.65	2.06	2805.35	213.0	1349.85	78.1
17:40:00	4:47:00	24	-2160.78	-.13	2805.22	213.0	1349.69	77.0
17:50:00	4:57:00	24	-2160.87	-.09	2805.13	212.9	1349.76	77.8
18:00:00	5:07:00	24	-2161.48	-.61	2804.52	213.0	1349.18	78.6
18:10:00	5:17:00	24	-2161.70	-.22	2804.30	213.0	1348.80	79.8
18:20:00	5:27:00	24	-2161.31	.39	2804.69	212.9	1349.43	78.6
18:30:00	5:37:00	24	-2162.29	-.98	2803.71	212.9	1349.64	78.4
18:40:00	5:47:00	24	-2162.57	-.28	2803.43	212.9	1349.31	78.2
18:50:00	5:57:00	24	-2162.42	.15	2803.58	212.8	1349.21	78.5
19:00:00	6:07:00	24	-2161.82	.60	2804.18	212.8	1349.34	78.3
19:10:00	6:17:00	24	-2160.34	1.48	2805.66	212.9	1349.88	77.5
19:20:00	6:27:00	24	-2161.15	-.81	2804.85	212.8	1350.11	73.4
19:30:00	6:37:00	24	-2160.53	.62	2805.47	213.2	1350.26	72.7
19:40:00	6:47:00	24	-2162.05	-1.52	2803.95	212.8	1349.38	71.2
19:50:00	6:57:00	24	-2161.93	.12	2804.07	212.8	1348.87	70.6
20:00:00	7:07:00	24	-2160.81	1.12	2805.19	212.8	1349.36	69.8
20:10:00	7:17:00	24	-2161.32	-.51	2804.68	212.8	1349.03	70.5

Shutting in well

END OF FLOW TEST PULL TOOLS OUT OF HOLE

20:20:00	7:27:00	0	-1852.50	308.82	3113.50	214.8	1665.43	67.3

Amoco Production Company
West Division
1670 Broadway
P.O. Box 800
Denver, Colorado 80201
303-830-4040

RECEIVED
OCT 17 1983
DIVISION OF
OIL, GAS & MINING

David G. Wight
Division Production Manager

October 11, 1983

Dr. G. A. Shirazi, Director
Utah Division of Oil, Gas, and Mining
4241 State Office Bldg.
Salt Lake City, UT 84114

File: SPT-63-533.4

Dear Sir:

Cause #203-1
North Pineview Field
Summit County, Utah

In compliance with the order entered into by the Utah Board of Oil, Gas, and Mining on October 29, 1982, Amoco Production is submitting bottomhole pressure data recently obtained upon completion of the Champlin 544 Amoco "D" Well No. 1 (NW SW Section 25-T5N-R7E).

The attached data was obtained on September 25 and 26, 1983, while testing the gross Nugget interval 12,602'-684' after perforating and acidizing. Flow testing was completed on September 27 and the well has since been shut-in awaiting the installation of production facilities. Once the well has been placed on production, pressure surveys will be obtained every thirty (30) calendar days as required.

The maximum recorded pressure during the survey was 4963.0 psig at 12,560' MD (bomb setting depth). Our analysis of this pressure data results in a P* of 4967.6 psig at the aforementioned depth. Using a reservoir pressure gradient of 0.144 psi/ft., this P* value corresponds to a pressure of 4973.0 psig at a datum equivalent to 12,865' MD in the Davis Oil Logan Federal Well No. 1.

If there are any questions concerning this information, please advise.

Yours very truly,

David E. Wright

JEJ/gjw

Attachments

cc: R. B. Giles - Amoco Building
S. R. Smith - Davis Oil Company
J. D. Dolan - American Quasar Petroleum Company

LTR026

Form OGCC-3

OCT 17 1983

DIVISION OF OIL, GAS & MINING

STATE OF UTAH

OIL & GAS CONSERVATION COMMISSION

SUBMIT IN DUPLICATE* (See other instructions on reverse side)

WELL COMPLETION OR RECOMPLETION REPORT AND LOG*

1a. TYPE OF WELL: OIL WELL ☐ GAS WELL ☒ DRY ☐ Other

b. TYPE OF COMPLETION: NEW WELL ☒ WORK OVER ☐ DEEP-EN ☐ PLUG BACK ☐ DIFF. RESVR. ☐ Other

2. NAME OF OPERATOR: Amoco Production Company

3. ADDRESS OF OPERATOR: P.O. Box 829, Evanston, WY 82930

4. LOCATION OF WELL (Report location clearly and in accordance with any State requirements)*

At surface: Section 25, T3N, R7E B.H.L. 1980 FSL + 660 FWL NWSW

At top prod. interval reported below: same

At total depth: same

5. LEASE DESIGNATION AND SERIAL NO.: Fee

6. IF INDIAN, ALLOTTEE OR TRIBE NAME:

7. UNIT AGREEMENT NAME:

8. FARM OR LEASE NAME: Champlin 544 Amoco D

9. WELL NO.: #1

10. FIELD AND POOL, OR WILDCAT: Wildcat

11. SEC., T., R., M., OR BLOCK AND SURVEY OR AREA: Sec. 25, T3N, R7E

14. PERMIT NO.: 43-043-30210 DATE ISSUED: 11-3-82

12. COUNTY OR PARISH: Summit 13. STATE: Utah

15. DATE SPUDDED: 16. DATE T.D. REACHED: 17. DATE COMPL. (Ready to prod.): 10/1/83

18. ELEVATIONS (DF, RKB, RT, GR, ETC.)*: GL=7106' KB = 7129 19. ELEV. CASINGHEAD: 7106'

20. TOTAL DEPTH, MD & TVD: 13,130' MD (13,030 TVD) 21. PLUG, BACK T.D., MD & TVD: -- 22. IF MULTIPLE COMPL., HOW MANY*: -- 23. INTERVALS DRILLED BY: → ROTARY TOOLS: All CABLE TOOLS: --

24. PRODUCING INTERVAL(S), OF THIS COMPLETION—TOP, BOTTOM, NAME (MD AND TVD)*: (12,500 - 12,710 - Nugget (TVD)) 12,602 - 12,814 - Nugget (MD)

25. WAS DIRECTIONAL SURVEY MADE: No

26. TYPE ELECTRIC AND OTHER LOGS RUN: DIL, DLL/MSFL, FDC/CNL, Sonci, Dipmeter, CBL, Temperature Survey

27. WAS WELL CORED: No

28. CASING RECORD (Report all strings set in well)

CASING SIZE	WEIGHT, LB./FT.	DEPTH SET (MD)	HOLE SIZE	CEMENTING RECORD	AMOUNT PULLED
13-3/8	72-68	5366	17-1/2	150 sx 50:50:2 + 2000 sx 50:50:2 + 1% $CaCl_2$ + 1/4#CF	
9-5/8	53.5-43.5	11,036	12-1/4	575 sacks class G	

29. LINER RECORD

SIZE	TOP (MD)	BOTTOM (MD)	SACKS CEMENT*	SCREEN (MD)
7.0"	9253'	11,118'	1100	
4.5"	8773'	13,130'	370	

30. TUBING RECORD

SIZE	DEPTH SET (MD)	PACKER SET (MD)
2-7/8	8773'	PBR 8773'

31. PERFORATION RECORD (Interval, size and number)

12,970-13,000 2 JSPF, casing gun (3-1/8") 19 gram charge
12,788-12,814 4 JSPF, casing gun (3-1/8")
12,602-12,683 4 JSPF, casing gun (3-1/8") 12 gram charge

32. ACID, SHOT, FRACTURE, CEMENT SQUEEZE, ETC.

DEPTH INTERVAL (MD)	AMOUNT AND KIND OF MATERIAL USED
12,970-13,000	3 bbls Class G cement
12,788-12,814	57 bbls 7-1/2% HCl w/additives
12,602-12,683	114 bbls 7-1/2% HCl w/ additives

33.* PRODUCTION

DATE FIRST PRODUCTION: SI PRODUCTION METHOD (Flowing, gas lift, pumping—size and type of pump): WELL STATUS (Producing or shut-in):

DATE OF TEST	HOURS TESTED	CHOKE SIZE	PROD'N. FOR TEST PERIOD	OIL—BBL.	GAS—MCF.	WATER—BBL.	GAS-OIL RATIO
9/25/83	12	30/64	→	233	~~5680~~ 2840 MCF	1.5	12,189 SCF/BBl

FLOW. TUBING PRESS.	CASING PRESSURE	CALCULATED 24-HOUR RATE	OIL—BBL.	GAS—MCF.	WATER—BBL.	OIL GRAVITY-API (CORR.)
1340 PSI	0.0	→	466	5.68 MMCFD	5	51.8 @ 51°F

34. DISPOSITION OF GAS (Sold, used for fuel, vented, etc.): SI

TEST WITNESSED BY:

35. LIST OF ATTACHMENTS:

36. I hereby certify that the foregoing and attached information is complete and correct as determined from all available records.

SIGNED: Lucy L. Smith TITLE: Staff Admin Anaylist (SG) DATE: 10/13/83

*(See Instructions and Spaces for Additional Data on Reverse Side)

INSTRUCTIONS

General: This form is designed for submitting a complete and correct well completion report and log on all types of lands and leases to either a Federal agency or a State agency, or both, pursuant to applicable Federal and/or State laws and regulations. Any necessary special instructions concerning the use of this form and the number of copies to be submitted, particularly with regard to local, area, or regional procedures and practices, either are shown below or will be issued by, or may be obtained from, the local Federal and/or State office. See instructions on items 22 and 24, and 33, below regarding separate reports for separate completions.
If not filed prior to the time this summary record is submitted, copies of all currently available logs (drillers, geologists, sample and core analysis, all types electric, etc.), formation and pressure tests, and directional surveys, should be attached hereto, to the extent required by applicable Federal and/or State laws and regulations. All attachments should be listed on this form, see item 35.
Item 4: If there are no applicable State requirements, locations on Federal or Indian land should be described in accordance with Federal requirements. Consult local State or Federal office for specific instructions.
Item 18: Indicate which elevation is used as reference (where not otherwise shown) for depth measurements given in other spaces on this form and in any attachments.
Items 22 and 24: If this well is completed for separate production from more than one interval zone (multiple completion), so state in item 22, and in item 24 show the producing interval, or intervals, top(s), bottom(s) and name(s) (if any) for only the interval reported in item 33. Submit a separate report (page) on this form, adequately identified, for each additional interval to be separately produced, showing the additional data pertinent to such interval.
Item 29: *"Sacks Cement":* Attached supplemental records for this well should show the details of any multiple stage cementing and the location of the cementing tool.
Item 33: Submit a separate completion report on this form for each interval to be separately produced. (See instruction for items 22 and 24 above.)

DST - None
Coring - None

37. SUMMARY OF POROUS ZONES:
SHOW ALL IMPORTANT ZONES OF POROSITY AND CONTENTS THEREOF; CORED INTERVALS; AND ALL DRILL-STEM TESTS, INCLUDING DEPTH INTERVAL TESTED, CUSHION USED, TIME TOOL OPEN, FLOWING AND SHUT-IN PRESSURES, AND RECOVERIES

FORMATION	TOP	BOTTOM	DESCRIPTION, CONTENTS, ETC.
Nugget	12,552'		4963 psi @ 12,560'

38. GEOLOGIC MARKERS

NAME	TOP MEAS. DEPTH	TOP TRUE VERT. DEPTH
Twin Creek		
Leeds Creek	11,488	
Watton Canyon	11,684	
Boundary Ridge	12,076	
Rich	12,124	
Sliderock	12,398	
Gypsum Springs	12,504	
Nugget	12,552	

Form OGC-1b

SUBMIT IN TRIPLICATE*
(Other instructions on reverse side)

STATE OF UTAH
DEPARTMENT OF NATURAL RESOURCES
DIVISION OF OIL, GAS, AND MINING

SUNDRY NOTICES AND REPORTS ON WELLS

(Do not use this form for proposals to drill or to deepen or plug back to a different reservoir. Use "APPLICATION FOR PERMIT—" for such proposals.)

5. LEASE DESIGNATION AND SERIAL NO.: FEE

6. IF INDIAN, ALLOTTEE OR TRIBE NAME:

1. OIL WELL [X] GAS WELL [ ] OTHER

7. UNIT AGREEMENT NAME:

2. NAME OF OPERATOR: Amoco Production Company

8. FARM OR LEASE NAME: Champlin 544 D

3. ADDRESS OF OPERATOR: P.O. Box 829, Evanston, WY 82930

9. WELL NO.: #1

4. LOCATION OF WELL (Report location clearly and in accordance with any State requirements.* See also space 17 below.) At surface: Sec. 25, T3N, R7E

10. FIELD AND POOL, OR WILDCAT: Wildcat

11. SEC., T., R., M., OR BLK. AND SURVEY OR AREA: Sec. 25, T3N, R7E

14. PERMIT NO.: 43043 30210

15. ELEVATIONS (Show whether DF, RT, GR, etc.): CR 7106

12. COUNTY OR PARISH: Summit

13. STATE: Utah

16. **Check Appropriate Box To Indicate Nature of Notice, Report, or Other Data**

NOTICE OF INTENTION TO:				SUBSEQUENT REPORT OF:			
TEST WATER SHUT-OFF	[ ]	PULL OR ALTER CASING	[ ]	WATER SHUT-OFF	[ ]	REPAIRING WELL	[ ]
FRACTURE TREAT	[ ]	MULTIPLE COMPLETE	[ ]	FRACTURE TREATMENT	[ ]	ALTERING CASING	[ ]
SHOOT OR ACIDIZE	[ ]	ABANDON*	[ ]	SHOOTING OR ACIDIZING	[ ]	ABANDONMENT*	[ ]
REPAIR WELL	[ ]	CHANGE PLANS	[ ]	(Other) Correction of Completion Report	[x]		
(Other)			[ ]				

(NOTE: Report results of multiple completion on Well Completion or Recompletion Report and Log form.)

17. DESCRIBE PROPOSED OR COMPLETED OPERATIONS (Clearly state all pertinent details, and give pertinent dates, including estimated date of starting any proposed work. If well is directionally drilled, give subsurface locations and measured and true vertical depths for all markers and zones pertinent to this work.)*

As per phone conversation between Ron Firth and Larry Smith 11/16/83. Please change the amount of gas as produced on the 12 hour test from 5680 MCF to 2840 MCF. on completion Report.

Also please find attached a copy of the directional survey that was requested by Ron Firth.

RECEIVED
NOV 28 1983
DIV. OF OIL, GAS & MINING

18. I hereby certify that the foregoing is true and correct

SIGNED Larry L. Smith TITLE Staff Admin. Anaylist (SG) DATE 11/18/83

(This space for Federal or State office use)

APPROVED BY _____ TITLE _____ DATE _____

CONDITIONS OF APPROVAL, IF ANY:

*See Instructions on Reverse Side

Form OGC-1b

SUBMIT IN TRIPLICATE*
(Other instructions on reverse side)

STATE OF UTAH
DEPARTMENT OF NATURAL RESOURCES
DIVISION OF OIL, GAS, AND MINING

SUNDRY NOTICES AND REPORTS ON WELLS

(Do not use this form for proposals to drill or to deepen or plug back to a different reservoir. Use "APPLICATION FOR PERMIT—" for such proposals.)

RECEIVED NOV 13 1989 DIVISION OF OIL, GAS & MINING

1. OIL WELL ☐ GAS WELL ☒ OTHER

2. NAME OF OPERATOR: Amoco Production Company

3. ADDRESS OF OPERATOR: P.O. Box 800, Rm 1846, Denver, Colorado 80201

4. LOCATION OF WELL (Report location clearly and in accordance with any State requirements. See also space 17 below.) At surface: 2045' FSL 1165' FWL

5. LEASE DESIGNATION AND SERIAL NO.: FEE

6. IF INDIAN, ALLOTTEE OR TRIBE NAME:

7. UNIT AGREEMENT NAME:

8. FARM OR LEASE NAME: Champlin 544D

9. WELL NO.: 1

10. FIELD AND POOL, OR WILDCAT: Wildcat

11. SEC., T., R., M., OR BLK. AND SURVEY OR AREA: Sec. 25 T3N, R 7E

14. PERMIT NO.: 43-043-30210

15. ELEVATIONS (Show whether DF, RT, GR, etc.): 7556' GR

12. COUNTY OR PARISH: Summit

13. STATE: UT.

16. **Check Appropriate Box To Indicate Nature of Notice, Report, or Other Data**

NOTICE OF INTENTION TO:				SUBSEQUENT REPORT OF:			
TEST WATER SHUT-OFF	☐	PULL OR ALTER CASING	☐	WATER SHUT-OFF	☐	REPAIRING WELL	☐
FRACTURE TREAT	☐	MULTIPLE COMPLETE	☐	FRACTURE TREATMENT	☐	ALTERING CASING	☐
SHOOT OR ACIDIZE	☐	ABANDON*	X	SHOOTING OR ACIDIZING	☐	ABANDONMENT*	☐
REPAIR WELL	☐	CHANGE PLANS	☐	(Other)			☐
(Other)			☐	(NOTE: Report results of multiple completion on Well Completion or Recompletion Report and Log form.)			

17. DESCRIBE PROPOSED OR COMPLETED OPERATIONS (Clearly state all pertinent details, and give pertinent dates, including estimated date of starting any proposed work. If well is directionally drilled, give subsurface locations and measured and true vertical depths for all markers and zones pertinent to this work.)*

This is to confirm verbal approval from Jim Thompson, of the UOGC, to Eric Root, of Amoco Production Company, to plug and abandon the subject well using the following procedure:

1. Set cement retainer @ 12,550'.
2. Cement squeeze perfs. from 12,602'–12,814' w/125 sx CL"G" or CL"H" cement.
3. Top cement retainer w/2 sx cement.
4. Set cement plug @ 10,980' w/15 sx cement.
5. Set cement plug @ 9,170' w/10 sx cement.
6. Set cement plug @ 8,710' w/15 sx cement.
7. Set cement plug @ 5,310 w/ 20 sx cement.
8. Set cement plug @ 2,600' w/30 sx cement.
9. Seal all surface annuli w/cement.
10. Set PXA marker in 30 sx cement plug at surface.

OIL AND GAS	
DRN	RJF
1- JRB ✓	GLH
DTS	SLS
2-TAS	
3- MICROFILM ✓	
4- FILE	

If you require any additional information, please contact Valerie Miller @ (303) 830-5108.

18. I hereby certify that the foregoing is true and correct

SIGNED J. L. Hampton (J. L. Hampton) TITLE Sr. Staff Admin Supv. DATE 11-8-89

(This space for Federal or State office use)

APPROVED BY _____ TITLE _____ DATE _____

CONDITIONS OF APPROVAL, IF ANY:

See attachment.

APPROVED BY THE STATE OF UTAH DIVISION OF OIL, GAS, AND MINING
DATE: 11-24-89
BY: John R. Baza

*See Instructions on Reverse Side

CHAMPLIN 544 D-1
NORTH PINEVIEW

SEC 25 T3N R7E SUMMIT COUNTY, UTAH 7129' KB 7106' GL

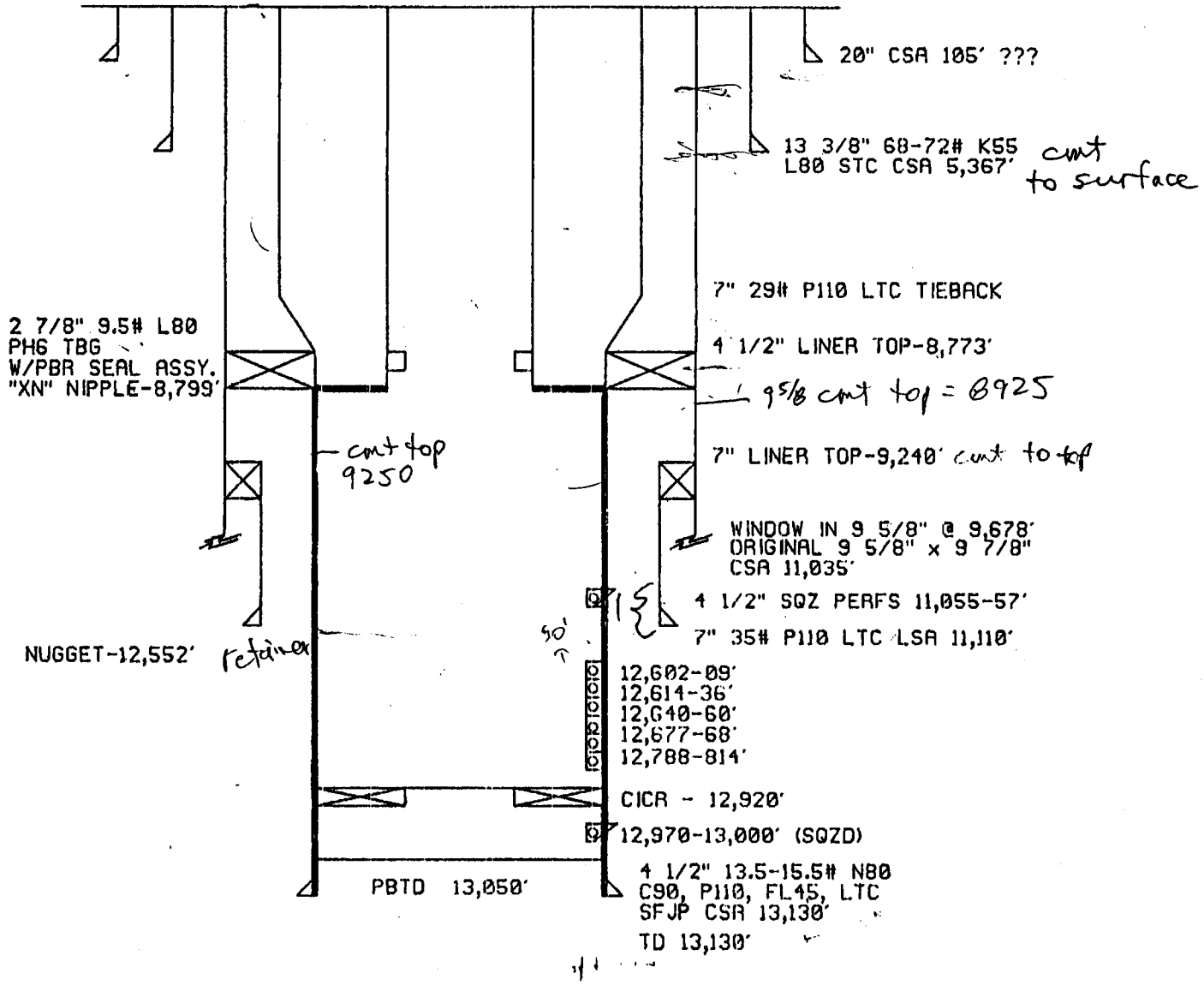

UTAH DIVISION OF OIL, GAS AND MINING
CONDITIONS OF APPROVAL FOR WELL PLUGGING AND ABANDONMENT

Amoco Production Company
Champlin 544D #1 Well
Section 25, T. 3N, R. 7E
Summit County, Utah
November 21, 1989

Reference document: Sundry notice dated November 8, 1989.

1. The operator shall notify the division at least 24 hours prior to commencing plugging operations to allow witnessing by a division representative.

OI58/120

Form OGC-1b

SUBMIT IN TRIPLICATE*
(Other instructions on reverse side)

12

STATE OF UTAH
DEPARTMENT OF NATURAL RESOURCES
DIVISION OF OIL, GAS, AND MINING

SUNDRY NOTICES AND REPORTS ON WELLS

(Do not use this form for proposals to drill or to deepen or plug back to a different reservoir. Use "APPLICATION FOR PERMIT—" for such proposals.)

1. OIL WELL ☐ GAS WELL ☒ OTHER

2. NAME OF OPERATOR: Amoco Production Company

3. ADDRESS OF OPERATOR: P.O. Box 800 - Rm 1843, Denver, CO 80201

4. LOCATION OF WELL (Report location clearly and in accordance with any State requirements.* See also space 17 below.) At surface: 2045' FSL 1165' FWL

5. LEASE DESIGNATION AND SERIAL NO.: Fee

6. IF INDIAN, ALLOTTEE OR TRIBE NAME:

7. UNIT AGREEMENT NAME:

8. FARM OR LEASE NAME: Champlin 544D

9. WELL NO.: 1

10. FIELD AND POOL, OR WILDCAT: Wildcat

11. SEC., T., R., M., OR BLK. AND SURVEY OR AREA: Sec. 25, T3N-R7E

14. PERMIT NO.: 43-043-30210

15. ELEVATIONS (Show whether DF, RT, GR, etc.): 7556' GR

12. COUNTY OR PARISH: Summit

13. STATE: UT

16. **Check Appropriate Box To Indicate Nature of Notice, Report, or Other Data**

NOTICE OF INTENTION TO:				SUBSEQUENT REPORT OF:			
TEST WATER SHUT-OFF	☐	PULL OR ALTER CASING	☐	WATER SHUT-OFF	☐	REPAIRING WELL	☐
FRACTURE TREAT	☐	MULTIPLE COMPLETE	☐	FRACTURE TREATMENT	☐	ALTERING CASING	☐
SHOOT OR ACIDIZE	☐	ABANDON*	☐	SHOOTING OR ACIDIZING	☐	ABANDONMENT*	X
REPAIR WELL	☐	CHANGE PLANS	☐	(Other)			☐
(Other)	☐						

(NOTE: Report results of multiple completion on Well Completion or Recompletion Report and Log form.)

17. DESCRIBE PROPOSED OR COMPLETED OPERATIONS (Clearly state all pertinent details, and give pertinent dates, including estimated date of starting any proposed work. If well is directionally drilled, give subsurface locations and measured and true vertical depths for all markers and zones pertinent to this work.)*

Amoco Production Company plugged and abandoned the subject well using the following procedure:

1. Set cement retainer @ 12,550'.
2. Pressure test casing to 1200 psi.
3. Cement squeeze perfs from 12602' - 12814' with 125 sx Cl "G" cement.
4. Top cement retainer with 314' cement.
5. Set 15 sx cement plug @ 10,980'.
6. Set 10 sx cement plug @ 9170'.
7. Set 15 sx cement plug @ 8710'.
8. Set 20 sx cement plug @ 5310'.
9. Set 20 sx cement plug @ 2600'.
10. Set PxA marker in 30 sx cement plug @ surface.

Note: Procedure witnessed by John Berrier w/UOGC

If you require any additional information, please contact Valerie Miller @ (303) 830-5108.

1-TAS
2- MICROFILM ✓
3- FILE

18. I hereby certify that the foregoing is true and correct

SIGNED J. L. Hampton J.L. Hampton for TITLE Sr. Staff Admin. Supv. DATE 01/17/90

(This space for Federal or State office use)

APPROVED BY _____ TITLE _____ DATE _____

CONDITIONS OF APPROVAL, IF ANY:

*See Instructions on Reverse Side

Champlin 544 D No. 1
Plug and Abandonment Proce[illegible]

1) MIRUSU.
2) Kill well, ND tree, NU BOP, establish injection rate into perfs.
3) Sting out of PBR at 8773' and TOH with tubing.
4) RU "E" line equipment, RIH with gauge ring for 4-1/2" casing to 12,550'.
5) RIH with cement retainer and set @ 12,550'.
6) PU additional tubing and RIH with 2-7/8" tubing. Sting into cement retainer.
7) Squeeze perfs from 12,602-81[illegible] with 125 sx of class "G" or class "H" cement mixed to 100 cc/30 minutes fluid loss and re[illegible] tarded for 3 hours at 5000 psi and 200 deg. Sting out of re[illegible] tainer, dump 2 sx cement on top of retainer, and reverse ou[illegible]
8) TOH and set the following plugs:

TOP OF PLUG	VOLUME OF PLUG	CMT TYPE	APPROX PLUG LENG[illegible]
10,980'	18 sx	*G or H	220'
9,170'	10 sx	*G or H	140'
8,710'	15 sx	*G or H	120'
5,310'	20 sx	*G or H	1[illegible]
2,600'	20 sx	*G or H	1[illegible]
surface	30 sx	*G or H	170

*This cement mixture requires no fluid loss additive[illegible] [illegible]sol retarding. Class A cement can be subst[illegible] [illegible] face plug if cost effective.

9) Seal all surface annuli with cement.
10) Set PxA marker:
Champlin 544 D No. 1
Amoco Production Company
Section 25-T3N-R7E
Total Depth 13,130' summit Co. Utah.
11) Clean up and reclaim location.

APPROVED BY THE STATE
OF UTAH DIVISION OF
OIL, GAS, AND MINING
DATE: 11-6-89
BY: [illegible]

CHAMPLIN 544 D-1
NORTH PINEVIEW

SEC 25 T3N R7E SUMMIT COUNTY, UTAH 7129' KB 7106' GL

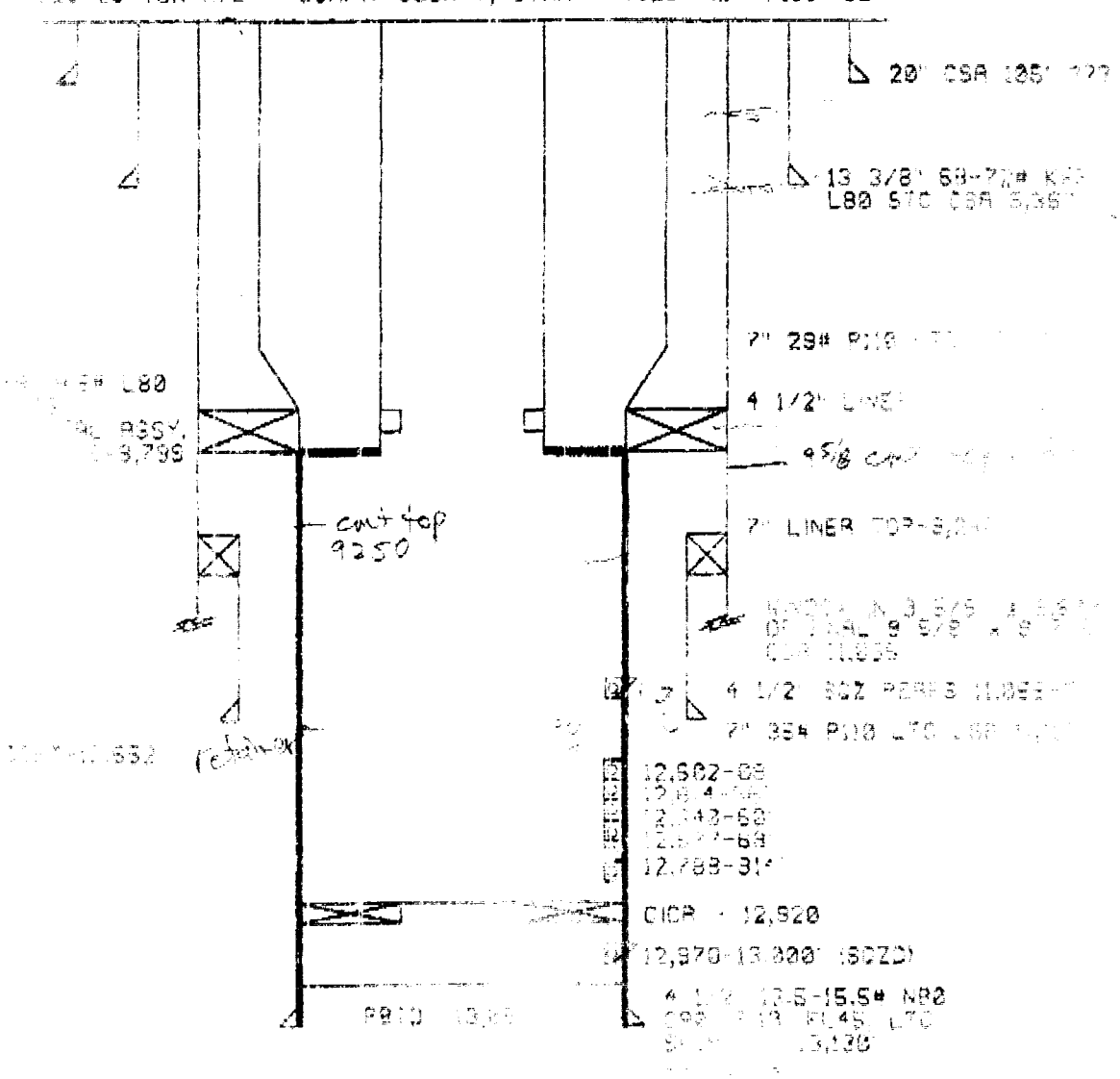

Amoco Production Company
Denver Region
1670 Broadway
P.O. Box 800
Denver, Colorado 80201
303-830-4040

Don F. Crespo, Jr.
Regional Administrative Manager, Production

RECEIVED
JAN 24 1990
DIVISION OF
OIL, GAS & MINING

January 22, 1990

State of Utah
Division of Oil, Gas & Mining
355 West North Temple
3 Triad Center, Suite 350
Salt Lake City, UT 84180-1203

File: DDL-2056-980.3

Annual Report of Drilling-Suspended,
Shut-In and Temporarily-Abandoned Wells

As operator of the Anschutz Ranch East Operation Center and in accordance with Rule R615-8-10 of the Utah Oil and Gas Conservation General Rules, listed below is the annual status report for wells that have been shut-in or teporarily-abandoned for more than 30 consecutive days as of December 31, 1989. The wells listed are located in Summit County, Utah.

Please note, there were no drilling wells that had suspended drilling operations as of December 31, 1989. Questions regarding well status may be directed to David Lovato at (303) 830-5321.

WELL NAME	API NUMBER	COMMENTS
ARE 081A	43-043-30130	SHUT-IN
ARE E28-06	43-043-30226	SHUT-IN
ARE W12-04	43-043-30283	SHUT-IN
ARE W29-04	43-043-30129	SHUT-IN
CH 387 B1A	43-043-30168	SHUT-IN TWIN CREEK
CH 372 C1	43-043-30143	SHUT-IN TWIN CREEK
CH 372 C1	43-043-30143	SHUT-IN NUGGET
CH 372 D1	43-043-30170	SHUT-IN NUGGET
ISLAND RANCH B1	43-043-30109	SHUT-IN TWIN CREEK
ISLAND RANCH D1	43-043-30161	SHUT-IN WEBER
AMOCO-CHAMP F & S	43-043-30078	SHUT-IN
CH 544 D1	43-043-30210	P X A (12/89) Sec. 25 T.3N R.7E
CH 544 D2	43-043-30246	P X A (12/89)

D. F. Crespo, Jr.
bmw

DJL/rlt

cc: Bureau of Land Management
324 South State, Suite 301
Salt Lake City, Utah 84111-2303

Amoco Production Company
Denver Region
1670 Broadway
P.O. Box 800
Denver, Colorado 80201
303-830-4040

RECEIVED
FEB 06 1991
DIVISION OF
OIL, GAS & MINING

Don F. Crespo, Jr.
Regional Administrative Manager, Production

February 4, 1991

State of Utah
Division of Oil, Gas, and Mining
355 West N. Temple
3 Triad Center, Suite 350
Salt Lake City, UT 84180-1203

File: DFC-100-980.3

Annual Report of Drilling-suspended,
Shut-in and Temporarily-Abandoned Wells

As operator of the Anschutz Ranch East Operation Center and in accordance with Rule 615-8-10 of the Utah Oil and Gas Conservation general Rules, Listed below is the annual status report for wells that have been shut-in or temporarily-abandoned for more than 30 consecutive days as of December 31, 1990. The wells listed are located in Summit County, Utah.

Well Name	API Number	Comments
Anschutz Ranch East 81A	43-043-30130	Shut-in
Anschutz Ranch East W12-04	43-043-30283	Shut-in
Champlin 387 B1A	43-043-30168	Shut-in (Twin Creek)
Champlin 372 C1	43-043-30143	Shut-in (Twin Creek)
Champlin 372 C1	43-043-30143	Shut-in (Nugget)
Champlin 372 D1	43-043-30170	Shut-in (Nugget)
Island Ranch B1	43-043-30109	Shut-in (Twin Creek)
Island Ranch D1	43-043-30161	Shut-in (Weber)
Amoco Champlin F & S	43-043-30078	Shut-in
Champlin 544 D1 Sec. 25, T3N, R 7E	43-043-30210 PA	P x A (12/89)
Champlin 544 D2	43-043-30246	P x A (12/89)
Champlin 846 Amoco /B/ #1	43-043-30253	Shut-in

Please note that there were no drilling wells that had suspended operations as of December 31, 1990. Questions regarding this report may be directed to James Camargo at (303) 830-4233.

D. F. Crespo, Jr. jmw

:jpc

cc: Bureau of Land Management
324 South State, Suite 301
Salt Lake City, Utah 84111-2303

```
****************
*              *
****************
* SCHLUMBERGER *
****************
```

HIGH RESOLUTION

DIAMETER

****

43-043-30210

CLUSTER LISTING
****

AMOCO PRODUCTION COMPANY

WILDCAT

SUMMIT, UTAH

CHAMPLIN 844 AMOCO D#1

RUN NO. FOUR JOB NO. 16269

CLUSTER RESULTS ONLY

4 FT. CORR. - 2 FT. STEP

40 DEG. X2 SEARCH ANGLE

Schlumberger

```
****************
*              *
****************
* SCHLUMBERGER *
****************
```

HIGH RESOLUTION

DIPMETER

****

CLUSTER LISTING
****

AMOCO PRODUCTION COMPANY

WILDCAT

SUMMIT, UTAH

CHAMPLIN 544 AMOCO D#1

RUN NO. ECUR JOB NO. 16269

CLUSTER RESULTS ONLY

4 FT. CORR. - 2 FT. STEP

40 DEG. X2 SEARCH ANGLE

Schlumberger

DEPTH	FORMATION DIP	FORMATION DIP AZI.	BOREHOLE DEV.	BOREHOLE DEV. AZI.	BOREHOLE DIAM 1-3	BOREHOLE DIAM 2-4	QUAL. INDEX BEST =A
11122.0	13.0	120	1.5	259	5.9	9.2	A
11124.0	13.1	115	1.6	260	5.8	9.3	C
11126.0	13.2	114	1.7	261	5.8	9.5	A
11128.0	13.6	116	1.7	262	5.8	8.9	A
11130.0	15.9	118	1.8	262	5.7	8.2	A
11132.0	16.4	115	1.9	264	5.7	8.0	A
11134.0	16.0	112	1.9	265	5.7	7.9	A
11136.0	15.4	113	2.0	266	5.6	7.8	A
11138.0	15.9	111	2.1	266	5.5	7.5	A
11140.0	16.2	110	2.2	267	5.5	7.4	A
11142.0	15.6	114	2.3	267	5.5	7.3	A
11144.0	16.1	115	2.5	267	5.5	7.2	A
11146.0	17.4	117	2.6	267	5.5	7.1	A
11148.0	18.0	108	2.7	267	5.6	7.1	A
11150.0	18.6	108	2.8	268	5.7	7.0	A
11152.0	14.2	111	2.9	268	5.7	7.0	A
11154.0	11.9	103	3.0	268	5.7	7.0	A
11156.0	18.4	100	3.1	269	5.8	7.0	A
11158.0			3.2	269	5.8	6.9	
11160.0			3.3	270	5.8	6.9	
11162.0			3.4	271	5.8	6.9	
11164.0	19.4	114	3.5	271	5.8	6.9	A
11166.0	12.5	115	3.5	272	5.8	7.0	A
11168.0	9.3	120	3.6	272	5.8	7.2	A
11170.0	14.7	109	3.7	272	5.8	7.3	A
11172.0	15.3	111	3.8	273	5.8	7.2	A
11174.0	15.8	110	3.9	273	5.8	7.1	A
11176.0	17.9	117	4.0	273	5.8	7.2	C
11178.0	17.0	126	4.2	273	5.8	7.0	A
11180.0	17.3	127	4.3	274	5.9	6.7	A
11182.0	14.0	120	4.4	274	5.9	6.6	A
11184.0	12.6	119	4.4	275	5.9	6.6	A
11186.0	11.9	123	4.5	275	5.9	6.6	A
11188.0	12.9	119	4.7	274	5.9	6.5	A
11190.0	13.8	122	4.8	275	5.9	6.5	A
11192.0	14.1	120	4.8	275	5.9	6.5	A
11194.0	13.8	125	4.9	275	5.9	6.6	A
11196.0	13.9	121	5.0	275	5.9	6.5	A
11198.0	11.3	113	5.1	275	5.9	6.6	A
11200.0	11.6	121	5.2	275	5.9	6.6	A

DEPTH	FORMATION DIP	FORMATION DIP AZI.	BOREHOLE DEV.	BOREHOLE DEV. AZI.	BOREHOLE DIAM 1-3	BOREHOLE DIAM 2-4	QUAL. INDEX BEST =A
11202.0	13.8	119	5.3	275	6.0	6.7	A
11204.0	14.6	117	5.4	275	6.0	6.8	A
11206.0	15.9	107	5.4	275	6.0	6.7	A
11208.0	16.2	108	5.5	275	6.0	6.7	A
11210.0	15.6	106	5.5	275	6.0	6.8	C
11212.0	14.8	111	5.5	275	5.9	6.9	A
11214.0	14.5	112	5.6	275	5.9	7.0	A
11216.0	14.2	112	5.6	276	5.9	7.1	A
11218.0	12.6	121	5.7	276	5.9	6.9	A
11220.0	11.2	137	5.8	276	5.9	6.8	A
11222.0	16.0	116	5.8	277	5.9	6.8	A
11224.0	16.0	113	5.8	276	5.9	6.8	A
11226.0	16.2	114	5.9	276	5.9	6.8	A
11228.0	16.4	113	5.9	276	5.9	6.8	A
11230.0	15.5	112	6.0	275	5.9	6.8	A
11232.0	15.0	116	6.0	276	5.9	6.8	A
11234.0	15.7	115	6.1	276	5.9	6.8	A
11236.0	15.9	115	6.1	276	5.9	6.8	A
11238.0	16.1	116	6.2	275	5.9	6.8	A
11240.0	16.0	116	6.2	275	5.9	6.8	A
11242.0	16.4	114	6.3	275	5.9	6.8	A
11244.0	16.7	114	6.3	275	5.9	6.8	A
11246.0	17.2	113	6.4	275	5.9	6.8	A
11248.0	16.9	114	6.4	275	5.9	6.8	A
11250.0	16.4	114	6.5	276	5.9	6.8	D
11252.0	16.8	118	6.5	276	5.9	6.8	B
11254.0	17.3	118	6.6	276	5.9	6.8	D
11256.0	56.1	309	6.7	276	5.9	6.8	B
11258.0			6.8	276	5.9	6.8	
11260.0			6.9	275	5.9	6.8	
11262.0	15.8	117	7.0	276	5.9	6.8	C
11264.0	15.6	123	7.0	276	5.9	6.8	A
11266.0	15.4	122	7.1	276	5.9	6.8	C
11268.0			7.2	276	5.9	6.8	
11270.0			7.3	276	6.0	6.8	
11272.0	16.4	117	7.4	275	6.0	6.7	A
11274.0	14.7	112	7.4	275	6.0	6.6	A
11276.0	13.2	115	7.5	276	6.0	6.6	A
11278.0	12.9	122	7.7	276	6.0	6.6	A
11280.0	11.2	124	7.7	276	6.0	6.6	A

Schlumberger

DEPTH	FORMATION DIP	FORMATION DIP AZI.	BOREHOLE DEV.	BOREHOLE DEV. AZI.	BOREHOLE DIAM 1=3	BOREHOLE DIAM 2=4	QUAL. INDEX BEST =A
11282.0	11.8	117	7.9	276	5.9	6.5	A
11284.0	13.7	112	7.9	276	5.9	6.5	A
11286.0	14.3	118	8.0	276	5.9	6.5	A
11288.0	14.1	114	8.0	275	5.9	6.5	A
11290.0	13.8	115	8.1	275	5.9	6.5	A
11292.0	15.5	113	8.1	276	5.9	6.5	A
11294.0	15.5	115	8.1	275	5.9	6.5	A
11296.0	15.7	114	8.2	275	5.9	6.5	D
11298.0			8.3	275	5.9	6.6	
11300.0	15.0	117	8.3	275	5.9	6.5	A
11302.0	14.7	121	8.4	275	5.9	6.5	A
11304.0	12.8	113	8.4	275	5.9	6.5	A
11306.0	12.0	109	8.5	275	5.9	6.6	A
11308.0	13.0	107	8.5	274	5.9	6.5	A
11310.0	13.5	108	8.6	274	5.9	6.5	A
11312.0	13.7	109	8.7	274	5.9	6.6	A
11314.0	13.9	109	8.8	275	5.9	6.6	A
11316.0	14.1	110	8.9	275	5.9	6.6	A
11318.0	16.0	107	8.9	275	5.9	6.7	A
11320.0			9.0	275	5.9	6.8	
11322.0			9.0	275	5.8	7.1	
11324.0	17.9	116	9.1	275	5.9	7.1	B
11326.0	15.9	125	9.1	276	5.9	7.3	B
11328.0	17.6	118	9.2	276	5.9	7.3	B
11330.0	16.3	125	9.3	276	5.9	7.1	D
11332.0	19.1	124	9.4	277	5.9	6.9	A
11334.0	19.6	122	9.5	277	5.9	6.9	A
11336.0	19.7	117	9.5	277	6.0	6.9	A
11338.0	19.4	116	9.6	276	6.0	6.7	A
11340.0	17.3	122	9.6	276	5.9	6.6	A
11342.0	17.9	121	9.7	276	5.9	6.6	A
11344.0	17.8	120	9.8	276	5.9	6.6	A
11346.0	17.1	119	9.8	276	5.9	6.7	A
11348.0	17.5	117	9.9	276	5.9	6.8	A
11350.0	19.3	113	9.9	276	5.9	6.9	A
11352.0	19.4	113	10.0	276	5.9	6.9	A
11354.0	19.8	113	10.0	276	5.9	6.9	A
11356.0	18.7	117	10.1	276	5.9	6.9	A
11358.0	20.2	115	10.1	276	5.9	6.9	A
11360.0	20.8	113	10.2	276	5.9	7.0	A

DEPTH	FORMATION DIP	FORMATION DIP AZI.	BOREHOLE DEV.	BOREHOLE DEV. AZI.	BOREHOLE DIAM 1-3	BOREHOLE DIAM 2-4	QUAL. INDEX BEST =A
11362.0	20.1	124	10.3	277	5.9	7.2	A
11364.0	16.9	113	10.3	276	5.8	7.5	A
11366.0	16.2	112	10.3	276	5.7	7.9	A
11368.0	18.7	118	10.4	276	5.8	8.3	A
11370.0	19.2	114	10.4	276	5.9	8.6	A
11372.0	17.6	113	10.5	277	5.9	8.4	C
11374.0	18.9	117	10.5	277	5.9	8.0	A
11376.0	19.7	116	10.6	277	5.9	7.7	A
11378.0	20.7	115	10.6	277	5.9	7.5	A
11380.0	20.1	114	10.7	277	5.9	7.2	A
11382.0	19.4	112	10.7	276	5.9	7.0	A
11384.0	18.6	112	10.8	276	5.9	6.9	A
11386.0	15.4	106	10.8	276	5.9	7.3	A
11388.0	16.5	118	10.9	277	5.9	7.8	A
11390.0	17.4	121	10.9	277	5.9	7.9	A
11392.0	14.3	122	11.0	277	6.0	7.9	A
11394.0	21.2	121	11.1	277	6.0	8.1	A
11396.0	23.2	120	11.1	277	6.0	8.2	A
11398.0	26.3	121	11.2	277	6.0	8.2	C
11400.0			11.2	277	6.0	7.7	
11402.0	29.3	119	11.3	278	5.8	7.0	C
11404.0	21.3	119	11.4	279	5.8	6.8	A
11406.0			11.5	279	6.0	7.2	
11408.0			11.5	278	6.0	7.3	
11410.0	20.6	121	11.6	279	6.0	7.2	A
11412.0	17.9	120	11.7	279	5.9	6.9	A
11414.0	16.8	123	11.7	279	6.0	7.0	A
11416.0	17.2	116	11.8	279	6.4	8.4	A
11418.0	17.6	126	11.8	279	6.7	9.0	A
11420.0	18.7	125	11.8	279	6.3	8.0	B
11422.0	17.3	128	11.9	279	6.0	7.5	B
11424.0	18.7	137	11.9	280	6.1	7.3	D
11426.0	20.2	125	12.0	280	6.1	6.7	D
11428.0			12.0	279	6.1	6.3	
11430.0	20.3	115	12.1	280	6.2	6.8	D
11432.0			12.2	281	6.2	6.9	
11434.0			12.2	279	6.2	6.4	
11436.0	20.0	141	12.2	280	6.2	6.2	B
11438.0	18.7	135	12.3	280	6.2	6.1	B
11440.0	16.7	123	12.3	280	6.1	6.1	A

Schlumberger

DEPTH	FORMATION DIP	FORMATION DIP AZI.	BOREHOLE DEV.	BOREHOLE DEV. AZI.	BOREHOLE DIAM 1-3	BOREHOLE DIAM 2-4	QUAL. INDEX BEST =A
11442.0	17.6	123	12.3	280	6.2	6.1	A
11444.0	18.1	122	12.4	280	6.2	6.1	A
11446.0	16.4	119	12.4	280	6.2	6.1	A
11448.0	15.8	122	12.4	281	6.2	6.1	A
11450.0	14.4	122	12.4	281	6.2	6.0	A
11452.0	10.9	134	12.5	281	6.2	6.0	A
11454.0	12.3	137	12.5	281	6.1	6.0	A
11456.0	13.8	132	12.5	282	6.1	6.0	A
11458.0	16.1	123	12.6	281	6.1	6.0	A
11460.0	17.4	101	12.6	281	6.1	6.0	A
11462.0	16.8	96	12.6	282	6.1	6.1	A
11464.0	13.9	103	12.7	282	6.1	6.2	A
11466.0	21.1	118	12.7	282	6.1	6.5	C
11468.0	34.8	109	12.7	283	6.2	6.5	B
11470.0	35.8	112	12.7	283	6.1	6.5	B
11472.0	37.5	109	12.7	283	6.2	6.7	B
11474.0	40.0	103	12.7	283	6.3	6.9	D
11476.0	43.1	112	12.8	283	6.2	7.0	D
11478.0			12.8	282	6.2	7.0	
11480.0	16.7	115	12.9	282	6.1	7.1	D
11482.0			12.9	282	6.1	7.4	
11484.0			12.9	282	6.1	7.7	
11486.0			12.9	282	6.2	7.5	
11488.0	20.5	136	13.0	283	6.2	6.6	D
11490.0	19.1	116	13.0	284	6.2	6.0	D
11492.0	18.1	123	13.1	284	6.2	6.0	D
11494.0	68.5	12	13.1	283	6.1	6.0	B
11496.0	76.8	11	13.2	283	6.1	6.0	B
11498.0	17.7	122	13.2	283	6.1	6.0	A
11500.0	17.9	123	13.2	283	6.1	6.0	A
11502.0	20.0	123	13.3	283	6.1	6.0	A
11504.0	20.4	123	13.3	283	6.1	6.0	A
11506.0	21.0	121	13.4	283	6.2	6.1	A
11508.0	17.4	122	13.4	284	6.2	6.1	A
11510.0	16.2	129	13.4	283	6.2	6.1	A
11512.0	14.9	123	13.5	283	6.2	6.2	A
11514.0	19.8	117	13.5	284	6.3	6.4	A
11516.0	21.0	121	13.5	284	6.3	6.4	A
11518.0	20.3	125	13.6	284	6.3	6.2	A
11520.0	19.8	126	13.6	284	6.3	6.2	A

Schlumberger

DEPTH	FORMATION DIP	FORMATION DIP AZI.	BOREHOLE DEV.	BOREHOLE DEV. AZI.	BOREHOLE DIAM 1-3	BOREHOLE DIAM 2-4	QUAL. INDEX BEST =A
11522.0	19.8	127	13.6	284	6.2	6.1	A
11524.0	18.5	125	13.7	283	6.2	6.1	A
11526.0	17.5	121	13.8	284	6.1	6.1	C
11528.0			13.8	284	6.2	6.4	
11530.0			13.8	283	6.4	6.8	
11532.0			13.8	283	6.9	7.0	
11534.0			13.9	284	6.7	6.5	
11536.0			13.9	285	6.2	6.2	
11538.0			13.9	285	6.1	6.0	
11540.0			14.0	285	6.1	6.0	
11542.0	22.2	134	14.0	285	6.0	6.0	A
11544.0	20.9	134	14.1	286	6.0	6.1	C
11546.0	21.1	123	14.1	286	6.1	6.2	A
11548.0	15.9	114	14.1	285	6.2	6.7	A
11550.0	19.0	116	14.2	284	6.2	6.6	A
11552.0	20.4	117	14.2	285	6.2	6.1	A
11554.0	10.6	185	14.3	285	6.2	6.1	B
11556.0	16.7	122	14.3	285	6.1	6.1	A
11558.0	20.4	117	14.3	286	6.1	6.0	A
11560.0	21.5	118	14.4	286	6.1	6.0	A
11562.0	24.8	115	14.4	286	6.1	6.0	A
11564.0	22.3	114	14.4	286	6.1	6.1	A
11566.0	17.2	126	14.4	286	6.1	6.0	A
11568.0	17.0	124	14.5	286	6.1	6.0	A
11570.0	18.1	129	14.5	285	6.1	6.2	A
11572.0	18.6	128	14.5	285	6.1	6.2	A
11574.0	17.0	132	14.5	286	6.1	6.0	A
11576.0	16.9	130	14.5	286	6.1	6.1	A
11578.0	18.1	129	14.5	286	6.1	6.3	A
11580.0	18.3	132	14.6	285	6.1	6.2	A
11582.0	16.6	131	14.6	285	6.1	5.9	A
11584.0	16.4	124	14.6	285	6.2	5.9	A
11586.0	19.0	113	14.7	285	6.1	6.1	A
11588.0	18.2	117	14.7	286	6.2	6.1	A
11590.0	16.6	121	14.8	286	6.2	6.2	A
11592.0	17.2	120	14.8	286	6.2	6.5	A
11594.0	24.3	146	14.8	285	6.2	6.9	A
11596.0	23.0	142	14.9	285	6.2	6.5	C
11598.0	16.0	121	14.9	285	6.2	6.1	A
11600.0	16.8	121	14.9	285	6.2	6.1	A

Schlumberger

DEPTH	FORMATION DIP	FORMATION DIP AZI.	BOREHOLE DEV.	BOREHOLE DEV. AZI.	BOREHOLE DIAM 1-3	BOREHOLE DIAM 2-4	QUAL. INDEX BEST =A
11602.0	19.0	120	15.0	286	6.2	6.1	A
11604.0	18.6	119	15.0	286	6.2	6.1	A
11606.0	19.1	121	15.0	285	6.2	6.1	A
11608.0	18.7	125	15.0	286	6.2	6.1	A
11610.0	19.0	126	15.1	286	6.3	6.1	A
11612.0	14.0	125	15.1	285	6.3	6.1	A
11614.0	12.2	136	15.2	285	6.3	6.1	A
11616.0	20.0	118	15.2	285	6.3	6.1	A
11618.0	19.8	118	15.2	285	6.4	6.1	A
11620.0	19.8	119	15.3	286	6.4	6.1	A
11622.0	21.1	118	15.3	286	6.4	6.1	A
11624.0	21.2	119	15.4	286	6.4	6.1	C
11626.0	19.1	122	15.4	286	6.4	6.1	A
11628.0	20.4	119	15.5	286	6.4	6.1	A
11630.0			15.6	286	6.4	6.1	
11632.0			15.6	286	6.4	6.1	
11634.0			15.7	286	6.3	6.1	
11636.0	23.9	118	15.7	286	6.3	6.1	B
11638.0	21.5	124	15.9	286	6.3	6.2	A
11640.0	19.9	127	15.9	287	6.4	6.3	A
11642.0	19.6	124	15.9	287	6.4	6.3	A
11644.0	19.9	122	16.0	287	6.3	6.3	A
11646.0	19.3	123	16.0	288	6.3	6.3	A
11648.0	19.4	120	16.1	287	6.3	6.3	A
11650.0	19.5	124	16.1	287	6.2	6.4	A
11652.0	18.6	123	16.1	287	6.2	6.7	C
11654.0	20.5	121	16.2	287	6.2	6.9	A
11656.0			16.2	288	6.3	6.6	
11658.0	22.4	117	16.2	288	6.2	6.3	C
11660.0	21.9	122	16.3	288	6.2	6.2	A
11662.0	20.8	124	16.3	288	6.1	6.1	A
11664.0	20.1	115	16.4	288	6.1	6.1	C
11666.0	19.0	119	16.4	288	6.1	6.1	C
11668.0			16.5	288	6.1	6.1	
11670.0	19.0	116	16.5	288	6.2	6.1	A
11672.0	18.3	119	16.5	288	6.1	6.1	A
11674.0	19.1	119	16.6	288	6.1	6.1	A
11676.0	21.3	115	16.6	288	6.1	6.3	A
11678.0	21.7	115	16.6	288	6.0	6.4	A
11680.0	21.1	118	16.7	288	6.0	6.3	A

Schlumberger

DEPTH	FORMATION DIP	FORMATION DIP AZI.	BOREHOLE DEV.	BOREHOLE DEV. AZI.	BOREHOLE DIAM 1-3	BOREHOLE DIAM 2-4	QUAL. INDEX BEST =A
11682.0	19.9	119	16.7	288	6.1	6.3	A
11684.0	18.9	126	16.7	288	6.1	6.3	A
11686.0	21.5	118	16.8	289	6.2	6.3	A
11688.0	20.9	119	16.8	290	6.3	6.2	A
11690.0	21.7	122	17.0	290	6.2	6.2	A
11692.0	21.3	123	17.0	290	6.1	6.2	A
11694.0	19.7	124	17.1	290	6.1	6.2	A
11696.0	20.0	118	17.1	290	6.1	6.1	A
11698.0			17.1	290	6.1	6.1	
11700.0	18.3	124	17.2	289	6.1	6.1	A
11702.0	21.4	119	17.2	290	6.1	6.1	A
11704.0	21.8	118	17.3	290	6.1	6.1	A
11706.0			17.3	291	6.1	6.1	
11708.0	21.9	120	17.4	291	6.1	6.1	A
11710.0	21.8	120	17.4	291	6.1	6.1	A
11712.0	22.5	113	17.5	290	6.1	6.1	A
11714.0	20.8	110	17.5	290	6.1	6.1	A
11716.0	20.8	112	17.5	291	6.1	6.2	A
11718.0	20.6	116	17.5	291	6.1	6.2	A
11720.0	22.1	122	17.6	291	6.0	6.3	A
11722.0	17.2	121	17.6	291	6.0	6.3	A
11724.0	17.3	118	17.7	290	6.1	6.5	A
11726.0	23.1	119	17.7	290	6.1	6.7	C
11728.0	19.6	142	17.7	290	6.1	6.4	A
11730.0	21.7	122	17.7	291	6.0	6.0	A
11732.0	22.6	120	17.8	291	6.0	6.0	A
11734.0	21.8	120	17.8	291	6.0	6.1	C
11736.0	21.6	120	17.9	291	5.9	6.1	A
11738.0	22.7	119	17.9	291	5.9	6.2	A
11740.0	21.3	120	18.0	291	5.9	6.2	A
11742.0			18.0	291	5.8	6.1	
11744.0	21.5	117	18.1	291	5.8	6.1	A
11746.0	21.3	119	18.1	291	5.8	6.2	A
11748.0	21.1	119	18.1	290	5.8	6.2	A
11750.0	19.7	120	18.2	290	5.8	6.2	A
11752.0	19.0	121	18.2	289	5.8	6.2	A
11754.0	18.5	124	18.2	289	5.8	6.2	D
11756.0	18.6	120	18.3	290	5.8	6.2	D
11758.0			18.3	291	5.8	6.2	
11760.0	29.2	60	18.3	290	5.8	6.3	B

Schlumberger

DEPTH	FORMATION DIP	FORMATION DIP AZI.	BOREHOLE DEV.	BOREHOLE DEV. AZI.	BOREHOLE DIAM 1-3	BOREHOLE DIAM 2-4	QUAL. INDEX BEST =A
11762.0	27.6	56	18.3	290	5.9	6.3	B
11764.0	22.5	124	18.3	290	6.0	6.4	D
11766.0	26.0	116	18.3	291	6.0	6.5	B
11768.0	25.9	114	18.4	291	6.0	6.4	B
11770.0	23.3	131	18.4	291	5.9	6.3	D
11772.0	22.8	121	18.4	292	5.8	6.3	A
11774.0	23.1	120	18.5	292	5.8	6.4	A
11776.0	24.1	120	18.5	293	5.9	6.4	A
11778.0	23.1	123	18.5	292	5.9	6.3	A
11780.0	16.6	122	18.5	292	5.8	6.3	A
11782.0	22.6	121	18.5	292	5.8	6.2	A
11784.0	23.3	121	18.6	292	5.8	6.2	A
11786.0	24.7	126	18.6	291	5.9	6.1	A
11788.0	24.2	123	18.6	291	5.8	6.1	A
11790.0	23.2	119	18.7	291	5.8	6.1	A
11792.0	21.0	129	18.7	293	5.8	6.1	A
11794.0	14.8	133	18.8	294	5.8	6.1	A
11796.0	23.9	121	18.8	293	5.8	6.1	C
11798.0	22.5	126	18.8	292	5.8	6.2	A
11800.0	25.4	120	18.8	291	5.7	6.2	A
11802.0	24.7	121	18.9	292	5.7	6.3	C
11804.0	21.9	122	18.8	292	5.7	6.3	A
11806.0	20.9	123	18.8	292	5.7	6.3	A
11808.0	2.8	141	18.8	292	5.8	6.3	D
11810.0	19.9	114	18.9	293	5.8	6.3	C
11812.0	29.1	122	18.9	293	5.7	6.3	C
11814.0	20.1	132	18.9	292	5.7	6.3	A
11816.0	19.9	130	19.0	293	5.7	6.3	A
11818.0	20.8	127	19.0	295	5.7	6.3	A
11820.0	15.6	123	19.0	296	5.8	6.4	C
11822.0	23.7	119	19.1	296	5.8	6.3	C
11824.0	17.1	149	19.1	295	5.8	6.3	C
11826.0	20.8	124	19.1	294	5.8	6.2	A
11828.0	22.5	114	19.1	293	5.8	6.1	A
11830.0	19.2	121	19.2	293	5.8	6.1	A
11832.0	22.1	122	19.2	293	5.8	6.0	A
11834.0	28.4	124	19.2	294	5.8	6.1	A
11836.0	23.6	125	19.3	295	5.8	6.2	A
11838.0	26.6	126	19.3	294	5.8	6.2	A
11840.0	27.5	122	19.3	294	5.8	6.2	A

Schlumberger

DEPTH	FORMATION DIP	FORMATION DIP AZI.	BOREHOLE DEV.	BOREHOLE DEV. AZI.	BOREHOLE DIAM 1-3	BOREHOLE DIAM 2-4	QUAL. INDEX BEST =A
11842.0	27.8	124	19.3	294	5.7	6.2	A
11844.0	28.2	125	19.3	294	5.7	6.2	A
11846.0	28.5	124	19.4	293	5.7	6.1	A
11848.0	28.6	126	19.4	294	5.7	6.0	A
11850.0	27.7	129	19.4	295	5.7	6.1	A
11852.0			19.5	296	5.8	6.3	
11854.0	33.3	123	19.5	295	5.7	6.2	A
11856.0	31.5	123	19.5	294	5.7	6.0	A
11858.0	28.2	123	19.6	294	5.7	5.8	A
11860.0	29.7	125	19.6	295	5.7	5.9	A
11862.0	29.7	123	19.7	295	5.7	6.0	A
11864.0	33.3	121	19.7	294	5.7	6.0	A
11866.0	35.1	121	19.8	294	5.7	6.1	D
11868.0	29.5	121	19.8	294	5.7	6.0	D
11870.0			19.9	295	5.7	6.0	
11872.0			19.9	297	5.8	6.1	
11874.0			19.9	298	5.9	6.4	
11876.0	33.1	126	19.9	297	5.8	6.4	B
11878.0	34.0	127	19.9	295	5.8	6.2	B
11880.0			20.0	295	5.7	6.1	
11882.0			20.0	295	5.7	5.9	
11884.0			20.1	295	5.7	5.8	
11886.0			20.2	295	5.7	6.1	
11888.0			20.2	295	5.7	6.3	
11890.0	47.1	115	20.2	295	5.7	6.4	B
11892.0	47.0	115	20.3	295	5.7	6.4	A
11894.0	36.5	110	20.3	295	5.7	6.4	C
11896.0			20.3	295	5.7	6.1	
11898.0	46.3	116	20.3	294	5.7	6.0	C
11900.0	43.2	113	20.3	294	5.7	6.1	A
11902.0			20.4	294	5.8	6.1	
11904.0	47.6	116	20.4	295	5.8	6.1	A
11906.0	32.5	118	20.5	295	5.7	6.1	C
11908.0	42.1	115	20.5	295	5.7	6.1	A
11910.0	41.7	116	20.6	295	5.7	6.1	A
11912.0	39.5	117	20.6	294	5.7	6.1	A
11914.0	39.4	117	20.6	294	5.8	6.0	A
11916.0	34.9	116	20.7	295	5.8	6.0	C
11918.0			20.7	296	5.8	6.1	
11920.0	37.9	123	20.8	296	5.8	6.1	A

Schlumberger

DEPTH	FORMATION DIP	FORMATION DIP AZI.	BOREHOLE DEV.	BOREHOLE DEV. AZI.	DIAM 1-3	DIAM 2-4	QUAL. INDEX BEST =A
11922.0	37.7	124	20.8	295	5.8	6.1	A
11924.0	39.2	126	20.8	295	5.7	6.2	A
11926.0	37.4	126	20.9	296	5.7	6.2	C
11928.0	32.6	127	20.9	296	5.7	6.2	A
11930.0	30.0	126	21.0	296	5.7	6.2	A
11932.0	29.0	125	21.0	295	5.7	6.2	A
11934.0	26.0	131	21.0	294	5.7	6.2	A
11936.0	28.6	132	21.1	295	5.7	6.2	A
11938.0	31.2	130	21.1	297	5.7	6.3	C
11940.0	25.6	124	21.1	297	5.7	6.3	A
11942.0	22.8	123	21.1	296	5.7	6.3	A
11944.0	23.0	126	21.2	296	5.7	6.3	A
11946.0	31.2	115	21.2	296	5.7	6.2	A
11948.0	28.5	112	21.2	295	5.7	6.1	A
11950.0	25.0	112	21.2	295	5.7	6.1	A
11952.0	31.1	125	21.2	295	5.7	6.1	A
11954.0	31.3	125	21.2	296	5.7	6.2	A
11956.0	30.5	126	21.3	297	5.7	6.1	A
11958.0	30.5	125	21.3	297	5.7	6.1	A
11960.0	32.3	117	21.4	296	5.7	6.1	C
11962.0	23.4	125	21.4	296	5.7	6.0	A
11964.0	27.3	129	21.4	296	5.7	6.0	A
11966.0	30.6	125	21.5	295	5.7	5.9	A
11968.0			21.5	296	5.8	5.9	
11970.0			21.5	297	5.8	5.9	
11972.0			21.5	298	5.8	5.9	
11974.0			21.6	298	5.8	5.9	
11976.0			21.6	297	5.8	5.9	
11978.0			21.6	298	5.8	6.0	
11980.0			21.6	299	5.8	6.0	
11982.0			21.7	298	5.8	6.1	
11984.0	36.8	113	21.7	299	5.8	6.1	B
11986.0	37.0	116	21.7	299	5.8	6.1	B
11988.0			21.8	298	5.7	6.0	
11990.0			21.8	298	5.7	6.0	
11992.0			21.8	297	5.7	6.0	
11994.0			21.9	298	5.7	6.1	
11996.0			22.0	298	5.7	6.1	
11998.0			22.0	299	5.7	6.0	
12000.0	27.9	107	22.0	298	5.7	6.0	D

Schlumberger

DEPTH	FORMATION DIP	FORMATION DIP AZI.	BOREHOLE DEV.	BOREHOLE DEV. AZI.	BOREHOLE DIAM 1-3	BOREHOLE DIAM 2-4	QUAL. INDEX BEST =A
12002.0	21.7	139	22.1	298	5.7	6.1	B
12004.0	25.8	135	22.1	297	5.7	6.1	B
12006.0	24.9	133	22.1	297	5.7	6.2	B
12008.0	23.6	133	22.1	297	5.7	6.2	A
12010.0	24.6	133	22.1	297	5.7	6.3	A
12012.0	26.1	135	22.1	297	5.7	6.3	A
12014.0	27.0	137	22.2	298	5.6	6.3	A
12016.0	26.6	136	22.2	298	5.6	6.4	A
12018.0	23.6	137	22.2	298	5.6	6.4	B
12020.0	23.6	137	22.2	298	5.6	6.3	B
12022.0	28.9	133	22.2	297	5.6	6.3	D
12024.0			22.2	297	5.5	6.3	
12026.0			22.3	297	5.5	6.3	
12028.0			22.3	296	5.5	6.3	
12030.0			22.3	295	5.5	6.3	
12032.0			22.4	297	5.6	6.3	
12034.0	27.6	126	22.4	300	5.8	6.6	D
12036.0			22.4	301	5.8	7.0	
12038.0			22.4	299	5.8	7.2	
12040.0			22.4	299	5.8	7.4	
12042.0			22.5	301	5.8	7.8	
12044.0	25.7	127	22.5	300	5.8	7.6	D
12046.0	23.5	144	22.4	300	5.8	7.0	B
12048.0	23.6	151	22.5	300	5.8	6.9	B
12050.0	25.5	138	22.5	299	5.8	6.6	B
12052.0	26.3	134	22.4	298	5.7	6.2	B
12054.0	30.6	134	22.5	297	5.6	6.1	D
12056.0	28.1	132	22.5	296	5.6	6.3	D
12058.0			22.5	296	5.6	6.4	
12060.0			22.5	297	5.6	6.4	
12062.0	25.5	105	22.6	298	5.6	6.5	D
12064.0	23.4	108	22.6	297	5.6	6.4	B
12066.0	20.5	123	22.6	297	5.6	6.4	B
12068.0	19.8	127	22.6	297	5.6	6.1	B
12070.0	36.7	112	22.6	298	5.6	6.6	B
12072.0	36.7	115	22.6	299	5.6	6.7	B
12074.0	26.6	130	22.6	299	5.5	6.8	D
12076.0	6.8	324	22.6	297	5.5	6.9	B
12078.0	19.1	131	22.6	296	5.7	7.1	D
12080.0	20.4	131	22.6	297	6.4	7.5	D

Schlumberger

DEPTH	FORMATION DIP	FORMATION DIP AZI.	BOREHOLE DEV.	BOREHOLE DEV. AZI.	BOREHOLE DIAM 1-3	BOREHOLE DIAM 2-4	QUAL. INDEX BEST =A
12082.0	29.3	145	22.7	299	6.8	7.9	D
12084.0	25.3	118	22.7	299	6.2	7.3	D
12086.0	24.4	130	22.7	299	5.7	6.7	B
12088.0	25.0	130	22.8	300	5.7	6.7	B
12090.0	24.6	133	22.8	300	5.6	6.6	B
12092.0			22.8	300	5.5	6.7	
12094.0			22.8	300	5.5	7.1	
12096.0			22.9	301	5.6	7.5	
12098.0			22.9	300	5.6	7.8	
12100.0	30.5	136	22.9	299	5.6	8.3	D
12102.0			22.9	301	5.7	8.8	
12104.0	14.5	146	22.9	302	5.6	8.6	D
12106.0			23.0	303	5.7	9.2	
12108.0	22.7	129	23.0	301	5.7	8.1	D
12110.0	22.4	123	23.0	298	5.7	8.4	B
12112.0	25.3	120	23.2	300	5.7	8.8	D
12114.0			23.2	300	5.7	8.6	
12116.0			23.2	300	5.7	7.9	
12118.0			23.2	301	5.8	7.6	
12120.0			23.3	301	5.9	8.1	
12122.0			23.3	302	5.8	8.0	
12124.0			23.4	303	5.7	7.2	
12126.0	30.6	146	23.5	302	5.6	6.6	A
12128.0	30.1	146	23.5	300	5.6	6.6	A
12130.0	25.3	135	23.5	300	5.6	6.5	A
12132.0	25.5	136	23.5	301	5.5	6.1	A
12134.0	26.7	138	23.5	301	5.4	6.3	A
12136.0	25.9	142	23.5	302	5.6	6.4	A
12138.0	25.8	140	23.6	304	5.6	6.5	C
12140.0	22.0	137	23.7	304	5.6	6.6	C
12142.0	23.9	124	23.7	303	5.6	6.7	A
12144.0	24.3	127	23.5	301	5.7	6.6	A
12146.0	24.2	127	23.6	299	5.7	6.4	A
12148.0	30.1	137	23.7	299	5.6	6.3	C
12150.0	24.3	128	23.7	300	5.6	6.3	A
12152.0	23.3	129	23.7	300	5.7	6.3	A
12154.0	26.4	127	23.7	300	5.8	6.2	C
12156.0	23.1	135	23.8	300	5.7	6.1	A
12159.0	22.6	127	23.8	300	5.7	6.1	A
12160.0	23.7	130	23.7	300	5.7	6.1	A

Schlumberger

DEPTH	FORMATION DIP	FORMATION DIP AZI.	BOREHOLE DEV.	BOREHOLE DEV. AZI.	BOREHOLE DIAM 1-3	BOREHOLE DIAM 2-4	QUAL. INDEX BEST =A
12162.0	23.2	136	23.8	300	5.7	6.1	A
12164.0	23.0	137	23.8	301	5.7	6.1	A
12166.0	23.3	132	23.8	300	5.8	6.1	A
12168.0	23.3	134	23.8	300	5.8	6.1	A
12170.0	23.6	137	23.9	301	5.8	6.0	A
12172.0	24.5	135	23.9	301	5.8	6.0	A
12174.0	24.5	130	23.9	301	5.8	6.0	A
12176.0	24.2	128	23.9	300	5.8	6.0	A
12178.0	23.1	134	23.9	300	5.8	6.0	A
12180.0	23.3	133	23.9	300	5.8	6.1	A
12182.0	25.1	131	23.9	301	5.7	6.1	A
12184.0	25.4	130	23.9	300	5.3	6.2	C
12186.0	26.3	132	23.9	300	5.8	6.3	A
12188.0	24.1	134	24.0	300	5.8	6.3	A
12190.0	21.6	141	24.0	301	5.7	6.4	A
12192.0	22.3	138	24.0	301	5.7	6.4	A
12194.0	22.7	137	24.0	301	5.6	6.5	A
12196.0	24.2	135	24.0	301	5.6	6.5	A
12198.0	24.7	137	24.1	301	5.6	6.5	A
12200.0	24.0	138	24.1	302	5.6	6.4	A
12202.0	24.1	137	24.1	302	5.5	6.4	A
12204.0			24.1	302	5.5	6.4	
12206.0			24.1	303	5.5	6.5	
12208.0	25.0	137	24.2	303	5.5	6.5	B
12210.0			24.2	302	5.5	6.5	
12212.0	25.1	140	24.3	301	5.4	6.5	D
12214.0			24.3	301	5.4	6.6	
12216.0			24.3	301	5.4	6.6	
12218.0			24.3	301	5.5	6.7	
12220.0			24.3	301	5.4	6.7	
12222.0			24.3	302	5.4	6.7	
12224.0			24.4	302	5.6	6.8	
12226.0			24.4	302	5.5	6.9	
12228.0			24.4	302	5.4	7.0	
12230.0			24.4	302	5.3	7.0	
12232.0	21.6	140	24.4	302	5.3	7.0	D
12234.0	21.3	137	24.4	302	5.3	7.2	B
12236.0	22.2	134	24.4	302	5.3	7.2	B
12238.0	20.7	138	24.4	302	5.2	7.1	D
12240.0	24.6	146	24.4	302	5.2	7.0	B

Schlumberger

DEPTH	FORMATION DIP	FORMATION DIP AZI.	BOREHOLE DEV.	BOREHOLE DEV. AZI.	BOREHOLE DIAM 1-3	BOREHOLE DIAM 2-4	QUAL. INDEX BEST =A
12242.0	24.2	143	24.4	302	5.2	7.0	B
12244.0	22.6	141	24.4	302	5.2	6.9	D
12246.0			24.5	302	5.2	6.9	
12248.0	22.6	149	24.5	303	5.2	6.9	D
12250.0	25.0	143	24.5	303	5.3	6.9	C
12252.0	23.9	143	24.5	302	5.3	6.9	C
12254.0	24.6	141	24.5	302	5.3	6.9	A
12256.0	23.9	136	24.5	302	5.3	7.0	A
12258.0	22.5	135	24.5	303	5.3	7.0	A
12260.0	21.5	131	24.5	303	5.4	7.0	C
12262.0	21.3	137	24.5	303	5.3	7.0	C
12264.0	24.5	165	24.5	303	5.4	7.0	C
12266.0	32.7	182	24.5	303	5.4	7.0	B
12268.0	20.9	142	24.5	302	5.4	7.0	A
12270.0	19.4	146	24.4	303	5.4	7.0	C
12272.0	20.5	142	24.4	303	5.4	7.0	C
12274.0	22.3	143	24.4	303	5.4	7.0	A
12276.0	23.5	141	24.5	303	5.4	7.0	A
12278.0	18.5	142	24.5	302	5.4	6.9	A
12280.0	19.8	135	24.5	303	5.4	6.9	A
12282.0	19.4	141	24.4	303	5.4	6.9	A
12284.0	20.1	143	24.4	303	5.4	6.9	A
12286.0	19.9	140	24.4	303	5.4	6.8	A
12288.0	21.6	138	24.4	303	5.3	6.8	A
12290.0	23.3	158	24.4	303	5.4	6.9	A
12292.0	24.0	159	24.4	303	5.5	6.9	A
12294.0	23.1	164	24.4	304	5.4	6.9	A
12296.0	20.2	158	24.4	304	5.4	6.9	A
12298.0	19.5	157	24.4	304	5.4	6.8	C
12300.0	19.2	145	24.4	304	5.3	6.8	A
12302.0	24.5	163	24.4	304	5.4	6.8	C
12304.0			24.5	304	5.4	7.0	
12306.0			24.5	303	5.4	7.0	
12308.0	17.0	153	24.4	303	5.4	6.9	B
12310.0	16.4	152	24.4	303	5.3	6.9	B
12312.0	18.6	166	24.4	304	5.4	6.9	D
12314.0	17.6	146	24.5	304	5.4	6.9	D
12316.0			24.5	304	5.5	6.9	
12318.0			24.4	304	5.5	6.9	
12320.0	17.5	153	24.5	304	5.5	6.9	B

Schlumberger

DEPTH	FORMATION DIP	FORMATION DIP AZI.	BOREHOLE DEV.	BOREHOLE DEV. AZI.	BOREHOLE DIAM 1-3	BOREHOLE DIAM 2-4	QUAL. INDEX BEST =A
12322.0			24.5	304	5.5	6.8	
12324.0			24.5	304	5.5	6.7	
12326.0			24.5	304	5.5	6.8	
12328.0	15.4	148	24.6	304	5.5	6.9	A
12330.0	16.3	146	24.5	305	5.6	6.8	A
12332.0	18.0	139	24.5	304	5.5	6.9	A
12334.0	21.5	144	24.5	304	5.5	7.0	A
12336.0	21.8	144	24.4	305	5.6	7.0	A
12338.0	18.3	144	24.4	305	5.6	7.0	A
12340.0	19.3	157	24.5	306	5.5	6.9	A
12342.0			24.5	305	5.4	6.9	
12344.0			24.5	305	5.4	7.0	
12346.0			24.5	305	5.5	7.1	
12348.0	16.0	132	24.5	305	5.5	7.2	C
12350.0	19.5	132	24.5	306	5.4	7.2	C
12352.0	18.5	156	24.5	306	5.4	7.3	A
12354.0	20.5	147	24.5	306	5.5	7.4	A
12356.0	15.8	139	24.5	306	5.4	7.4	A
12358.0	15.5	123	24.5	306	5.3	7.3	A
12360.0	17.8	129	24.5	306	5.3	7.3	A
12362.0	20.9	127	24.5	306	5.3	7.5	A
12364.0	20.7	123	24.5	305	5.4	7.6	A
12366.0	21.0	133	24.5	306	5.4	7.6	C
12368.0	22.1	131	24.5	305	5.4	7.7	A
12370.0	21.2	135	24.6	305	5.4	7.6	A
12372.0	20.1	136	24.6	305	5.4	7.6	A
12374.0	22.8	130	24.6	306	5.5	7.8	A
12376.0	21.1	136	24.6	306	5.6	8.1	A
12378.0			24.7	307	5.7	8.6	
12380.0	20.7	131	24.7	306	5.7	8.3	D
12382.0	30.6	113	24.7	305	5.7	8.1	D
12384.0			24.7	306	5.7	8.2	
12386.0			24.7	306	5.8	8.2	
12388.0			24.7	306	5.7	8.0	
12390.0			24.7	305	5.6	7.7	
12392.0			24.8	306	5.5	7.6	
12394.0			24.9	307	5.5	7.6	
12396.0			24.9	307	5.6	7.4	
12398.0	16.4	115	25.0	307	5.6	7.0	D
12400.0	18.6	112	25.0	307	5.5	6.8	D

Schlumberger

DEPTH	FORMATION DIP	FORMATION DIP AZI.	BOREHOLE DEV.	BOREHOLE DEV. AZI.	BOREHOLE DIAM 1-3	BOREHOLE DIAM 2-4	QUAL. INDEX BEST =A
12402.0	23.9	122	24.9	307	5.5	6.8	C
12404.0	35.1	121	24.9	307	5.5	6.6	C
12406.0	29.4	123	25.0	306	5.5	6.6	A
12408.0	29.6	123	25.0	306	5.5	6.6	A
12410.0			25.1	306	5.5	6.6	
12412.0			25.2	306	5.6	7.1	
12414.0			25.3	308	5.8	8.1	
12416.0	28.9	142	25.3	308	5.8	8.5	C
12418.0	24.8	129	25.3	309	5.8	8.7	C
12420.0			25.3	310	5.8	8.7	
12422.0			25.3	310	5.8	8.2	
12424.0			25.3	307	5.7	7.2	
12426.0	30.7	152	25.3	307	5.7	6.7	C
12428.0			25.3	308	5.8	6.7	
12430.0	29.2	134	25.3	307	5.8	6.6	C
12432.0	40.5	144	25.3	307	5.8	6.7	A
12434.0	40.0	147	25.3	307	5.7	6.7	A
12436.0	37.3	144	25.3	307	5.6	6.6	C
12438.0	29.6	143	25.3	308	5.5	6.5	A
12440.0	29.3	143	25.4	308	5.5	6.5	A
12442.0	30.8	147	25.4	308	5.5	6.5	A
12444.0	32.8	144	25.4	307	5.5	6.5	A
12446.0	30.2	142	25.4	307	5.6	6.5	A
12448.0	29.5	142	25.4	307	5.7	6.5	A
12450.0	32.9	134	25.4	308	5.7	6.5	D
12452.0	32.4	164	25.4	308	5.6	6.3	D
12454.0			25.4	308	5.6	6.3	
12456.0	33.8	133	25.4	308	5.6	6.3	D
12458.0	29.1	140	25.4	308	5.7	6.3	B
12460.0	29.9	141	25.5	308	5.7	6.3	B
12462.0	33.6	166	25.5	308	5.7	6.3	B
12464.0	29.8	161	25.5	307	5.7	6.3	A
12466.0	29.9	132	25.6	308	5.7	6.2	A
12468.0	29.9	130	25.6	307	5.7	6.2	A
12470.0	30.5	144	25.6	307	5.8	6.2	A
12472.0	30.1	147	25.6	308	5.8	6.3	A
12474.0	29.3	149	25.6	309	5.7	6.4	A
12476.0	30.0	134	25.6	308	5.7	6.5	E
12478.0	29.4	132	25.6	307	5.7	6.6	A
12480.0	27.3	131	25.6	307	5.7	6.5	A

DEPTH	FORMATION DIP	FORMATION DIP AZI.	DEV.	BOREHOLE DEV. AZI.	DIAM 1-3	DIAM 2-4	QUAL. INDEX BEST =A
12432.0	34.9	139	25.7	308	5.7	6.5	A
12434.0	32.5	137	25.7	307	5.7	6.5	A
12436.0			25.7	308	5.7	6.5	
12438.0	29.2	130	25.7	309	5.8	6.3	C
12440.0	32.8	152	25.8	309	5.7	6.2	C
12442.0	30.2	128	25.8	308	5.6	6.1	A
12444.0	30.2	127	25.9	307	5.6	6.1	A
12446.0	24.0	144	25.8	307	5.7	6.0	C
12448.0	31.4	140	25.9	308	5.8	6.0	C
12500.0	33.4	133	25.9	308	5.8	6.0	A
12502.0			25.9	309	5.9	6.0	
12504.0			26.0	308	5.9	6.0	
12506.0			26.0	308	6.0	6.8	
12508.0			26.0	308	6.5	8.9	
12510.0			26.1	309	7.5	10.9	
12512.0			26.1	310	7.2	9.3	
12514.0			26.2	309	6.1	7.0	
12516.0			26.2	309	6.0	6.4	
12518.0			26.1	308	6.0	6.0	
12520.0			26.1	307	6.0	6.0	
12522.0			26.2	308	6.1	6.0	
12524.0			26.1	309	6.2	5.9	
12526.0			26.1	308	6.2	5.9	
12528.0			26.1	308	6.1	5.9	
12530.0			26.1	307	6.0	5.9	
12532.0			26.1	307	6.0	6.0	
12534.0			26.1	307	6.0	6.0	
12536.0			26.1	307	6.0	6.0	
12538.0	37.9	94	26.1	308	6.1	5.9	F
12540.0	37.8	95	26.2	309	6.2	5.9	D
12542.0			26.2	309	6.2	5.9	
12544.0			26.2	309	6.1	6.0	
12546.0			26.1	308	6.0	6.0	
12548.0			26.0	307	5.9	5.9	
12550.0	24.4	159	26.0	307	5.9	5.9	F
12552.0	26.9	153	26.0	308	5.9	6.0	D
12554.0	29.3	148	26.0	307	5.9	6.0	B
12556.0			26.0	307	5.9	5.9	
12558.0	24.0	141	26.0	307	5.9	5.9	B
12560.0	24.1	141	26.0	307	5.9	5.8	B

Schlumberger

DEPTH	FORMATION DIP	FORMATION DIP AZI.	BOREHOLE DEV.	BOREHOLE DEV. AZI.	BOREHOLE DIAM 1-3	BOREHOLE DIAM 2-4	QUAL. INDEX BEST =A
12562.0			26.0	309	5.8	5.9	
12564.0	34.1	130	26.0	308	5.9	5.9	C
12566.0	33.2	134	26.0	308	5.9	5.9	A
12568.0	32.5	134	25.9	307	5.8	5.9	E
12570.0	33.8	131	25.9	307	5.9	5.9	E
12572.0	37.4	134	25.9	308	5.9	5.8	E
12574.0	32.2	135	25.9	307	5.9	5.8	E
12576.0	34.4	135	25.8	307	5.9	5.8	E
12578.0	27.6	131	25.8	308	5.8	5.9	A
12580.0	28.7	133	25.8	308	5.9	5.8	A
12582.0	30.7	145	25.8	308	5.9	5.8	E
12584.0	26.1	147	25.8	308	5.8	5.8	A
12586.0	22.3	136	25.8	309	5.9	5.8	A
12588.0	24.6	145	25.8	309	5.8	5.8	A
12590.0	23.3	139	25.8	308	5.8	5.8	A
12592.0	25.4	140	25.8	308	5.8	5.8	A
12594.0	26.2	141	25.7	308	5.8	5.8	A
12596.0	26.7	144	25.8	308	5.8	5.8	A
12598.0			25.8	309	5.8	5.8	
12600.0			25.8	308	5.8	5.8	
12602.0			25.9	308	5.8	5.8	
12604.0			25.9	308	5.7	5.7	
12606.0			25.9	308	5.7	5.7	
12608.0			25.8	309	5.7	5.6	
12610.0			25.8	308	5.6	5.7	
12612.0			25.9	308	5.6	5.7	
12614.0			25.9	307	5.6	5.7	
12616.0			25.9	307	5.7	5.6	
12618.0			26.0	307	5.7	5.6	
12620.0			26.0	307	5.7	5.6	
12622.0	24.7	162	26.0	308	5.7	5.7	B
12624.0			26.0	307	5.8	5.7	
12626.0			26.0	307	5.8	5.7	
12628.0			26.0	307	5.7	5.7	
12630.0			26.0	307	5.7	5.7	
12632.0			26.0	308	5.7	5.7	
12634.0			26.1	308	5.6	5.7	
12636.0			26.1	308	5.7	5.8	
12638.0			26.1	308	5.8	5.7	
12640.0	43.2	128	26.1	307	5.7	5.7	D

Schlumberger

DEPTH	FORMATION DIP	FORMATION DIP AZI.	BOREHOLE DEV.	BOREHOLE DEV. AZI.	BOREHOLE DIAM 1-3	BOREHOLE DIAM 2-4	QUAL. INDEX BEST =A
12642.0			26.2	307	5.7	5.7	
12644.0	45.3	142	26.2	306	5.6	5.8	D
12646.0	48.3	136	26.2	306	5.6	5.8	D
12648.0			26.2	306	5.6	5.8	
12650.0	40.7	131	26.3	306	5.7	5.8	D
12652.0	38.3	138	26.4	306	5.7	5.7	D
12654.0			26.4	307	5.7	5.7	
12656.0			26.4	309	5.7	5.6	
12658.0			26.4	308	5.8	5.7	
12660.0			26.4	308	5.8	5.7	
12662.0			26.5	308	5.8	5.8	
12664.0			26.5	308	5.9	5.8	
12666.0			26.6	307	5.9	5.8	
12668.0			26.6	306	5.8	5.8	
12670.0			26.6	305	5.7	5.8	
12672.0	36.7	142	26.7	306	5.6	5.8	F
12674.0	39.5	139	26.7	307	5.5	5.8	B
12676.0	40.5	133	26.7	307	5.6	5.9	B
12678.0	43.5	131	26.7	307	5.6	5.8	D
12680.0			26.7	307	5.6	5.8	
12682.0			26.7	308	5.6	5.8	
12684.0			26.7	309	5.6	5.8	
12686.0	36.0	147	26.7	309	5.6	5.9	D
12688.0	46.0	142	26.7	308	5.5	5.9	D
12690.0	39.6	139	26.7	308	5.5	5.9	F
12692.0	28.4	137	26.7	308	5.6	5.9	D
12694.0	28.4	138	26.7	308	5.6	5.9	D
12696.0	31.0	140	26.7	308	5.6	5.9	D
12698.0	29.0	137	26.7	308	5.7	6.0	F
12700.0	33.6	157	26.7	308	5.7	6.0	A
12702.0	33.2	155	26.7	308	5.6	5.9	A
12704.0	32.1	148	26.7	308	5.6	5.9	E
12706.0	37.0	148	26.6	308	5.6	5.9	C
12708.0	33.5	150	26.7	308	5.6	5.9	A
12710.0	33.5	142	26.7	306	5.6	5.9	A
12712.0	32.5	154	26.6	306	5.6	6.0	C
12714.0	23.7	143	26.5	307	5.6	5.9	A
12716.0	28.8	141	26.6	306	5.6	6.0	A
12718.0			26.6	307	5.6	6.0	
12720.0	41.0	131	26.7	309	5.7	5.9	D

Schlumberger

DEPTH	FORMATION DIP	FORMATION DIP AZI.	BOREHOLE DEV.	BOREHOLE DEV. AZI.	BOREHOLE DIAM 1-3	BOREHOLE DIAM 2-4	QUAL. INDEX BEST =A
12722.0			26.6	308	5.9	6.0	
12724.0	32.7	148	26.6	306	5.9	6.0	D
12726.0			26.6	307	5.9	6.0	
12728.0			26.5	308	5.9	5.9	
12730.0	36.9	133	26.5	309	5.9	5.9	D
12732.0	34.4	139	26.5	309	5.9	5.9	F
12734.0	35.5	140	26.5	308	5.8	6.0	B
12736.0	34.2	139	26.5	307	5.8	6.0	B
12738.0	32.9	153	26.5	307	5.8	6.0	D
12740.0	34.7	135	26.5	307	5.8	6.0	A
12742.0	34.2	133	26.5	308	5.9	6.0	A
12744.0	34.9	141	26.5	307	5.9	6.0	C
12746.0	30.3	124	26.4	308	5.9	6.0	E
12748.0	28.7	139	26.4	308	5.8	6.0	A
12750.0	29.0	142	26.4	307	5.8	6.0	A
12752.0	36.0	141	26.4	307	5.8	6.0	A
12754.0	35.8	139	26.4	307	5.9	6.0	C
12756.0	47.2	144	26.4	308	5.9	6.0	B
12758.0	49.4	142	26.4	307	5.8	5.9	B
12760.0	39.5	167	26.4	307	5.8	5.8	E
12762.0	39.1	170	26.4	308	5.9	5.8	E
12764.0	38.9	171	26.4	308	5.9	5.8	A
12766.0	39.8	170	26.3	309	5.9	5.8	A
12768.0	40.0	172	26.3	309	5.9	5.9	C
12770.0			26.3	308	5.8	6.0	
12772.0	38.3	163	26.3	307	5.8	5.9	C
12774.0	28.1	156	26.3	309	5.9	5.8	A
12776.0	28.4	161	26.3	309	5.9	5.8	A
12778.0	29.8	179	26.3	309	5.9	5.8	C
12780.0	27.0	173	26.3	308	5.9	5.8	A
12782.0	26.5	154	26.3	307	5.9	5.9	A
12784.0	27.7	152	26.3	307	5.9	5.9	E
12786.0	45.6	191	26.3	308	5.9	5.8	B
12788.0	52.2	157	26.3	308	5.9	5.8	E
12790.0	53.8	154	26.3	308	5.8	5.7	E
12792.0	56.7	156	26.3	307	5.8	5.7	C
12794.0	49.3	168	26.3	309	5.8	5.8	C
12796.0			26.3	310	5.8	5.8	
12798.0			26.3	309	5.8	5.8	
12800.0			26.3	308	5.8	5.8	

Schlumberger

DEPTH	FORMATION DIP	FORMATION DIP AZI.	BOREHOLE DEV.	BOREHOLE DEV. AZI.	BOREHOLE DIAM 1-3	BOREHOLE DIAM 2-4	QUAL. INDEX BEST =A
12803.0			26.2	308	5.8	5.9	
12804.0			26.2	308	5.9	6.0	
12805.0			26.2	308	5.9	5.9	
12808.0	51.9	163	26.2	308	5.9	5.8	E
12810.0	51.8	168	26.2	309	5.9	5.8	E
12812.0	55.6	161	26.2	309	5.9	5.8	A
12814.0	56.3	155	26.2	310	5.9	5.8	A
12816.0	53.6	155	26.2	309	5.9	5.8	A
12818.0	47.2	158	26.2	309	5.9	5.9	E
12820.0	48.8	158	26.1	309	5.9	5.9	A
12822.0	53.9	157	26.1	309	5.9	6.0	C
12824.0	52.4	154	26.1	309	5.9	6.0	C
12826.0	53.6	148	26.1	309	5.8	6.0	A
12828.0	63.1	146	26.1	309	5.8	6.0	A
12830.0	57.1	139	26.1	309	5.8	6.0	C
12832.0	51.9	144	26.1	309	5.7	6.0	C
12834.0	56.0	142	26.0	308	5.7	6.1	C
12836.0			26.0	309	5.8	6.0	
12838.0			26.0	308	5.8	6.0	
12840.0			26.1	308	5.8	6.0	
12842.0			26.0	309	5.8	6.0	
12844.0			26.0	309	5.8	6.0	
12846.0			26.0	309	5.7	6.3	
12848.0			26.0	310	5.6	6.7	
12850.0			26.0	309	5.6	6.6	
12852.0			26.0	309	5.7	6.2	
12854.0			26.0	309	5.7	6.1	
12856.0	17.8	201	26.0	309	5.7	6.2	B
12858.0	13.8	188	26.0	309	5.7	6.2	B
12860.0	13.4	199	26.0	309	5.7	6.2	B
12862.0	18.5	199	26.0	308	5.8	6.3	B
12864.0	16.7	187	26.1	307	5.8	6.1	D
12866.0	36.9	154	26.1	308	5.9	6.0	D
12868.0	34.5	151	26.1	308	5.9	5.9	B
12870.0	32.6	141	26.1	308	5.9	5.9	B
12872.0	32.4	135	26.1	307	5.9	5.9	B
12874.0			26.1	307	5.9	6.0	
12876.0	24.4	183	26.1	308	5.9	6.0	A
12878.0	30.4	195	26.1	310	5.9	6.0	C
12880.0	33.4	189	26.1	310	5.9	6.0	C

Schlumberger

DEPTH	FORMATION DIP	FORMATION DIP AZI.	BOREHOLE DEV.	BOREHOLE DEV. AZI.	BOREHOLE DIAM 1-3	BOREHOLE DIAM 2-4	QUAL. INDEX BEST =A
12882.0	23.7	182	26.1	310	5.9	6.0	A
12884.0	24.5	180	26.1	310	5.9	6.0	E
12886.0	23.7	173	26.1	312	5.9	6.0	E
12888.0	29.9	176	26.1	312	5.9	6.0	A
12890.0	32.0	174	26.1	311	5.8	6.0	A
12892.0	37.2	174	26.1	311	5.8	6.0	A
12894.0			26.1	312	5.9	6.0	
12896.0			26.0	311	5.9	5.9	
12898.0	29.3	183	26.0	311	6.0	5.9	B
12900.0	25.8	174	25.9	311	6.0	6.0	B
12902.0	31.7	179	25.9	311	6.1	6.0	D
12904.0	24.4	149	25.9	312	6.1	5.9	D
12906.0	35.9	160	25.9	312	6.0	5.9	B
12908.0	33.5	160	25.8	311	6.0	5.8	F
12910.0	36.5	161	25.8	311	6.0	5.8	B
12912.0	26.4	170	25.8	310	6.0	5.8	D
12914.0	20.5	162	25.8	310	5.9	5.8	D
12916.0	25.5	162	25.8	311	5.9	5.9	A
12918.0	20.4	155	25.8	311	5.9	5.9	C
12920.0	26.4	154	25.7	310	5.9	5.9	A
12922.0	29.3	150	25.7	310	5.9	5.9	A
12924.0	34.9	144	25.7	310	5.9	5.9	A
12926.0	38.7	142	25.7	310	5.9	5.9	A
12928.0	42.2	139	25.7	310	5.9	5.9	A
12930.0	45.4	137	25.7	310	5.9	6.0	A
12932.0	43.8	137	25.7	311	5.9	6.0	A
12934.0	27.3	151	25.7	311	6.0	6.1	C
12936.0	37.7	165	25.7	311	6.0	6.1	D
12938.0	29.1	153	25.7	310	6.0	6.0	F
12940.0			25.7	311	5.9	6.0	
12942.0			25.6	312	5.9	5.9	
12944.0	43.0	159	25.6	312	5.9	5.9	D
12946.0	43.2	138	25.5	312	5.9	5.8	B
12948.0	42.1	139	25.5	312	5.9	5.8	F
12950.0	44.8	164	25.5	311	5.9	5.8	B
12952.0	43.2	166	25.5	310	5.9	5.9	F
12954.0	43.5	157	25.4	310	5.9	5.9	B
12956.0			25.3	310	5.9	6.0	
12958.0	18.5	158	25.3	311	5.8	6.0	D
12960.0	28.9	175	25.2	312	5.8	6.0	D

Schlumberger

DEPTH	FORMATION DIP	FORMATION DIP AZI.	BOREHOLE DEV.	BOREHOLE DEV. AZI.	BOREHOLE DIAM 1-3	BOREHOLE DIAM 2-4	QUAL. INDEX BEST =A
12962.0	29.5	171	25.1	311	5.8	6.0	B
12964.0	25.9	156	25.0	311	5.9	6.0	B
12966.0	25.0	147	25.0	311	5.9	6.0	B
12968.0	26.6	134	25.0	310	6.0	6.0	B
12970.0	23.4	134	24.9	310	5.9	5.9	B
12972.0			24.9	310	5.9	5.9	
12974.0			24.7	310	5.9	5.9	
12976.0	29.3	188	24.6	310	5.8	5.9	A
12978.0	30.4	184	24.5	310	5.8	5.9	A
12980.0	30.1	183	24.5	309	5.7	5.9	A
12982.0	33.9	184	24.4	310	5.7	5.9	A
12984.0	32.2	184	24.3	310	5.7	5.9	A
12986.0	31.7	186	24.3	309	5.9	5.0	A
12988.0	37.1	177	24.2	309	6.0	6.0	A
12990.0	34.5	180	24.1	308	6.1	6.1	A
12992.0	34.3	180	24.1	308	6.0	6.0	A
12994.0	33.2	180	24.1	308	6.0	6.0	A
12996.0	32.4	180	24.0	308	6.0	5.9	A
12998.0	32.0	184	24.0	309	6.0	5.9	E
13000.0	33.0	187	24.0	308	6.1	6.0	A
13002.0	35.1	181	23.9	308	6.1	6.1	A
13004.0	30.1	177	23.9	308	6.0	6.1	E
13006.0	29.4	176	23.9	308	6.0	6.1	A
13008.0			23.8	308	6.0	6.2	
13010.0			23.8	307	5.9	6.3	
13012.0	26.9	151	23.8	308	5.9	6.3	B
13014.0	26.9	146	23.8	307	5.9	6.4	D
13016.0	26.8	147	23.7	306	5.8	6.4	B
13018.0	26.9	143	23.7	305	5.8	6.3	D
13020.0	25.9	149	23.7	306	5.9	6.1	A
13022.0	23.9	162	23.6	307	6.0	6.0	A
13024.0	29.4	170	23.6	308	6.0	6.1	A
13026.0	31.8	167	23.6	309	6.1	6.3	A
13028.0	31.6	163	23.6	307	6.0	6.3	A
13030.0	29.6	156	23.6	307	6.0	6.4	A
13032.0	28.6	142	23.5	309	5.9	6.3	A
13034.0	27.3	138	23.5	308	5.9	6.3	A
13036.0	25.2	158	23.5	307	5.9	6.2	C
13038.0	27.7	123	23.5	306	5.9	6.1	C
13040.0			23.4	307	5.9	6.0	

Schlumberger

DEPTH	FORMATION DIP	FORMATION DIP AZI.	BOREHOLE DEV.	BOREHOLE DEV. AZI.	BOREHOLE DIAM 1-3	BOREHOLE DIAM 2-4	QUAL. INDEX BEST =A
13042.0	66.3	140	23.4	307	5.9	6.1	D
13044.0			23.4	307	6.0	6.1	
13046.0			23.4	306	6.1	6.0	
13048.0			23.4	306	6.1	6.1	
13050.0			23.4	306	6.1	6.1	
13052.0	62.9	137	23.4	306	6.0	6.1	B
13054.0			23.4	306	6.1	6.1	
13056.0			23.4	307	6.1	6.1	
13058.0			23.4	307	6.1	6.2	
13060.0	48.7	159	23.4	307	6.1	6.2	F
13062.0	49.5	158	23.4	306	6.2	6.0	B
13064.0	48.9	154	23.4	306	6.2	6.0	D
13066.0	50.9	155	23.5	307	6.2	6.2	D
13068.0	46.3	149	23.5	307	6.2	6.3	B
13070.0	43.9	147	23.5	307	6.0	6.3	D
13072.0	47.5	147	23.5	307	5.9	6.2	F
13074.0			23.5	307	6.0	6.0	
13076.0	44.6	128	23.5	307	6.1	6.1	D
13078.0	35.1	136	23.5	307	6.2	6.2	F
13080.0	23.9	182	23.5	306	6.3	6.3	E
13082.0	26.4	182	23.4	306	6.2	6.3	E
13084.0	25.9	182	23.4	305	6.1	6.1	E
13086.0	23.8	182	23.5	303	6.0	6.1	A
13088.0	25.5	188	23.5	303	5.9	6.1	A
13090.0	29.8	183	23.5	305	5.9	6.0	A
13092.0	30.8	187	23.5	305	6.0	6.0	A
13094.0	25.3	183	23.4	307	5.9	6.0	A
13096.0	26.7	189	23.4	307	6.0	5.9	A
13098.0	28.4	191	23.3	307	6.1	5.9	A
13100.0	29.2	184	23.3	308	6.1	6.1	E
13102.0	32.2	186	23.3	308	6.0	6.2	E
13104.0	18.1	173	23.2	308	6.0	6.2	A
13106.0	13.3	161	23.2	308	6.0	6.2	A
13108.0	10.6	168	23.1	309	6.0	6.2	A
13110.0	10.9	181	23.1	308	5.9	6.1	A
13112.0	13.5	185	23.1	307	5.8	6.1	A
13114.0	10.7	155	23.0	305	5.9	6.1	E
13116.0	12.4	178	23.0	305	5.9	5.9	A
13118.0	12.0	145	23.0	305	5.9	5.8	C
13120.0	11.3	155	23.1	307	5.8	5.7	A

Schlumberger

DEPTH	FORMATION DIP	FORMATION DIP AZI.	BOREHOLE DEV.	BOREHOLE DEV. AZI.	BOREHOLE DIAM 1-3	BOREHOLE DIAM 2-4	QUAL. INDEX BEST =A
13122.0	10.5	147	23.1	307	5.8	5.7	C
13124.0	11.1	153	23.0	307	5.9	5.9	C
13126.0	11.1	156	23.0	307	5.9	5.9	C
13128.0	13.3	147	23.0	307	5.8	5.8	A

Schlumberger

DEPTH	FORMATION DIP	FORMATION DIP AZI.	BOREHOLE DEV.	BOREHOLE DEV. AZI.	BOREHOLE DIAM 1-3	BOREHOLE DIAM 2-4	QUAL. INDEX BEST =A
12932.0	42.6	137	25.7	311	5.8	6.0	B
12934.0	30.4	151	25.7	312	5.9	6.1	B
12936.0	29.7	149	25.7	311	6.0	6.1	B
12938.0	29.4	155	25.7	311	5.9	6.1	B
12940.0	30.8	158	25.7	312	5.9	6.0	D
12942.0			25.7	312	5.8	6.0	
12944.0	26.4	167	25.7	312	5.8	5.9	D
12946.0	45.9	150	25.7	311	5.8	5.9	C
12948.0	47.6	148	25.7	311	5.8	5.9	C
12950.0	45.7	142	25.6	312	5.9	5.9	F
12952.0	44.6	161	25.5	311	5.9	5.9	A
12954.0	44.3	163	25.5	310	5.8	5.9	A
12956.0	41.9	156	25.4	311	5.8	5.9	A
12958.0			25.4	311	5.8	5.8	
12960.0			25.4	311	5.9	5.8	
12962.0	30.5	176	25.3	311	5.9	5.8	B
12964.0	30.0	170	25.2	311	5.9	5.9	B
12966.0	24.2	147	25.1	310	5.9	5.9	B
12968.0	24.4	136	25.1	310	5.8	6.0	B
12970.0	23.9	135	25.0	310	5.8	5.8	B
12972.0	33.7	190	24.9	310	5.8	5.6	D
12974.0	28.8	184	24.8	310	5.8	5.5	D
12976.0	34.3	199	24.7	310	5.8	5.5	D
12978.0	29.3	192	24.6	310	5.7	5.5	D
12980.0	33.0	192	24.5	310	5.7	5.5	A
12982.0	32.5	189	24.5	311	5.7	5.4	A
12984.0	32.9	188	24.4	311	5.7	5.5	A
12986.0	35.8	181	24.3	310	5.7	5.9	C
12988.0	30.8	203	24.2	309	5.8	6.0	D
12990.0	32.5	177	24.1	309	6.0	6.0	A
12992.0	32.9	177	24.1	309	6.0	6.0	A
12994.0	33.9	180	24.1	310	6.0	5.9	A
12996.0	31.8	182	24.0	308	5.9	5.9	A
12998.0	33.2	182	24.0	308	6.0	5.9	A
13000.0	32.1	186	24.0	308	6.0	6.0	A
13002.0	31.5	182	23.9	309	6.0	6.1	A
13004.0	30.5	180	23.9	309	6.0	6.1	A
13006.0	29.1	182	23.8	309	6.0	6.1	E
13008.0	27.6	172	23.8	308	5.9	6.1	A
13010.0	27.1	177	23.8	308	5.9	6.2	A

Schlumberger

DEPTH	FORMATION DIP	FORMATION DIP AZI.	BOREHOLE DEV.	BOREHOLE DEV. AZI.	BOREHOLE DIAM 1-3	BOREHOLE DIAM 2-4	QUAL. INDEX BEST =A
13012.0	27.7	169	23.8	308	5.9	6.3	C
13014.0	25.5	158	23.8	308	5.8	6.4	A
13016.0	25.8	150	23.7	308	5.8	6.4	C
13018.0	26.5	149	23.7	306	5.8	6.4	A
13020.0	28.9	139	23.6	305	5.9	6.3	C
13022.0	28.7	143	23.6	306	5.9	6.2	A
13024.0	35.5	164	23.6	308	5.9	6.2	A
13026.0	30.4	167	23.6	309	6.0	6.2	A
13028.0	31.2	166	23.6	309	6.0	6.3	A
13030.0	31.2	156	23.6	307	6.0	6.4	A
13032.0	30.5	145	23.5	307	5.9	6.4	A
13034.0	27.0	141	23.5	308	5.9	6.3	A
13036.0	27.5	143	23.5	307	5.9	6.3	A
13038.0	23.6	126	23.5	305	5.8	6.3	C
13040.0			23.5	306	5.8	6.1	
13042.0	45.6	153	23.5	307	5.8	6.0	B
13044.0	50.0	152	23.4	306	5.8	6.2	D
13046.0			23.5	306	5.9	6.1	
13048.0			23.5	306	6.0	6.1	
13050.0	49.0	154	23.5	305	6.1	6.1	D
13052.0	48.4	157	23.5	305	6.1	6.1	D
13054.0			23.5	306	6.1	6.0	
13056.0			23.6	306	6.1	6.1	
13058.0			23.6	307	6.0	6.1	
13060.0	47.5	161	23.5	308	5.9	5.9	A
13062.0	47.7	155	23.6	307	5.9	6.0	C
13064.0	41.8	151	23.6	306	5.9	6.1	C
13066.0	42.3	157	23.6	307	5.9	6.1	E
13068.0	46.2	153	23.6	308	5.9	6.1	A
13070.0	51.6	152	23.6	308	5.8	6.0	A
13072.0	59.0	156	23.6	309	5.7	5.9	A
13074.0			23.5	309	5.7	5.9	
13076.0	45.5	132	23.5	309	5.8	6.0	B
13078.0			23.5	309	6.0	6.1	
13080.0	24.8	191	23.5	309	6.0	6.2	A
13082.0	23.0	194	23.5	309	5.9	6.1	A
13084.0	24.8	189	23.4	309	5.8	6.0	A
13086.0	24.7	187	23.4	309	5.7	5.9	A
13088.0	27.6	189	23.3	309	5.7	5.8	A
13090.0	30.7	191	23.3	309	5.6	5.8	A

Schlumberger

AMOCO PRODUCTION COMPANY CHAMBLIN 544 AMOCO D#1 SUMMARY

DEPTH	DIP	DIP AZM	DEV	DEV AZM	DIAM 1-3	DIAM 2-4	QUAL
TOP 11122.00	13.0	120.	1.5	259.	5.9	9.2	A
BOTTOM 13128.00	13.3	147.	23.0	307.	5.8	5.8	A
TOP 12932.00	12.6	137.	25.7	311.	5.8	6.0	B
BOTTOM 13128.00	15.8	155.	23.0	305.	6.0	5.8	C

Schlumberger

DEPTH	FORMATION DIP	FORMATION DIP AZI.	BOREHOLE DEV.	BOREHOLE DEV. AZI.	BOREHOLE DIAM 1-3	BOREHOLE DIAM 2-4	QUAL. INDEX BEST =A
13092.0	29.0	187	23.3	308	5.5	5.7	A
13094.0	27.7	182	23.3	305	5.5	5.7	E
13096.0	35.7	179	23.3	305	5.7	5.7	A
13098.0	33.0	181	23.3	307	5.7	5.8	A
13100.0	29.3	180	23.3	307	5.7	6.0	A
13102.0	21.4	184	23.3	307	5.7	6.1	F
13104.0	15.3	163	23.2	305	5.7	6.1	B
13106.0	11.4	157	23.2	305	5.6	6.2	F
13108.0	12.7	164	23.1	304	5.5	6.2	B
13110.0	13.6	172	23.1	306	5.6	6.3	C
13112.0	13.4	188	23.0	306	5.8	6.3	A
13114.0	13.1	176	23.0	307	5.8	6.2	A
13116.0	10.6	155	23.0	308	5.8	6.0	A
13118.0	12.4	158	23.0	306	5.8	5.9	A
13120.0	10.9	150	23.0	305	5.8	5.9	A
13122.0	10.8	149	23.0	302	5.8	5.9	A
13124.0	12.9	155	23.0	301	5.8	5.9	C
13126.0			23.0	303	5.9	5.8	
13128.0	15.8	155	23.0	305	6.0	5.8	C

Schlumberger