DAVIS OIL COMPANY
410 – 17TH STREET, SUITE 1400
DENVER, COLORADO 80202
TELEPHONE: 303-623-1000

NEW ORLEANS
HOUSTON
TULSA

RECEIVED
SEP 01 1981
DIVISION OF
OIL, GAS & MINING

July 10, 1981

U.S.G.S.
1745 West & 1700 South
Room 2000, Adm. Bldg.
Salt Lake City, Utah 84104

RE: #1 Logan Federal
SE NE Sec. 26, T3N, R7E
Summit County, Utah

Gentlemen:

Enclosed please find for your approval, an original and three copies of the Application for Permit to Drill, together with four copies of the Staking Plat covering the drilling of the captioned proposed test.

By carbon copy of this letter to the Utah State Oil & Gas Commission, we are furnishing them with a copy of our application and staking plat.

Your early attention to the approval of said application will be appreciated.

Very truly yours,

DAVIS OIL COMPANY

Michelle

Michelle Fisher
Executive Secretary

/mf
Enclosures

cc: Utah State Oil & Gas Commission

Form 9-331 C
(May 1963)

SUBMIT IN TRIPLICATE*
(Other instructions on reverse side)

Form approved.
Budget Bureau No. 42-R1425.

UNITED STATES
DEPARTMENT OF THE INTERIOR
GEOLOGICAL SURVEY

RECEIVED
SEP 01 1981
DIVISION OF
OIL, GAS & MINING

# APPLICATION FOR PERMIT TO DRILL, DEEPEN, OR PLUG BACK

5. LEASE DESIGNATION AND SERIAL NO.: W-47812

6. IF INDIAN, ALLOTTEE OR TRIBE NAME: ——————

7. UNIT AGREEMENT NAME: ——————

8. FARM OR LEASE NAME: Logan Federal

9. WELL NO.: #1

10. FIELD AND POOL, OR WILDCAT: Wildcat

11. SEC., T., R., M., OR BLK. AND SURVEY OR AREA: Sec. 26, T3N, R7E

12. COUNTY OR PARISH: Summit

13. STATE: Utah

1a. TYPE OF WORK: DRILL [XX] DEEPEN [ ] PLUG BACK [ ]

b. TYPE OF WELL: OIL WELL [XXX] GAS WELL [ ] OTHER — SINGLE ZONE [XX] MULTIPLE ZONE [ ]

2. NAME OF OPERATOR: DAVIS OIL COMPANY

3. ADDRESS OF OPERATOR: 410 17th Street, Suite 1400, Denver, Colorado 80202

4. LOCATION OF WELL (Report location clearly and in accordance with any State requirements.*)
At surface: SE NE Sec. 26, T3N, R7E
At proposed prod. zone: 1659' FNL & 689' FEL

14. DISTANCE IN MILES AND DIRECTION FROM NEAREST TOWN OR POST OFFICE*: 16 miles east of Coalville, Utah

15. DISTANCE FROM PROPOSED* LOCATION TO NEAREST PROPERTY OR LEASE LINE, FT. (Also to nearest drlg. unit line, if any): 660' FEL

16. NO. OF ACRES IN LEASE:

17. NO. OF ACRES ASSIGNED TO THIS WELL:

18. DISTANCE FROM PROPOSED LOCATION* TO NEAREST WELL, DRILLING, COMPLETED, OR APPLIED FOR, ON THIS LEASE, FT.: NONE

19. PROPOSED DEPTH: 15,000' Wasatch

20. ROTARY OR CABLE TOOLS: Rotary

21. ELEVATIONS (Show whether DF, RT, GR, etc.): 7497' GR Est., 7507' KB Est.

22. APPROX. DATE WORK WILL START*: Upon approval

23. PROPOSED CASING AND CEMENTING PROGRAM

| SIZE OF HOLE | SIZE OF CASING | WEIGHT PER FOOT | SETTING DEPTH | QUANTITY OF CEMENT |
|---|---|---|---|---|
| 17 1/2" | 13 3/8" | 54.5# K-55 | STC (NEW) | ~~0-1500' 1300 sxs. est.~~ |
| 12 1/4" | 9 5/8" | 53.5# N-80 | ~~LTC (NEW)~~ | ~~0-160'~~ |
| 12 1/4" | 9 5/8" | 40# N-80 | LTC (NEW) | 160-4700' |
| 12 1/4" | 9 5/8" | 47# N-80 | LTC (NEW) | 4700-6800' |
| 12 1/4" | 9 5/8" | 53.5# N-80 | LTC (NEW) | 6800-8500' |
| 8 1/2" | 7" | 38# P-110 | LTC (NEW) | 0-80' |
| 8 1/2" | 7" | 26# P-110 | LTC (NEW) | 80-2160' |
| 8 1/2" | 7" | 29# N-80 | LTC (NEW) | 2160-3920' |
| 8 1/2" | 7" | 26# N-80 | LTC (NEW) | 3920-5200' |
| 8 1/2" | 7" | 29# N-80 | LTC (NEW) | 5200-9200' |
| 8 1/2" | 7" | 32# N-80 | LTC (NEW) | 9200-10,480' |
| 8 1/2" | 7" | 38# P-110 | LTC (NEW) | 10,480-11,040' |
| 8 1/2" | 7" | 32# N-80 | LTC (NEW) | 11,040-13,360' |
| 8 1/2" | 7" | 35# N-80 | LTC (NEW) | 13,360-15,000' 1500 sxs.est. |

IN ABOVE SPACE DESCRIBE PROPOSED PROGRAM: If proposal is to deepen or plug back, give data on present productive zone and proposed new productive zone. If proposal is to drill or deepen directionally, give pertinent data on subsurface locations and measured and true vertical depths. Give blowout preventer program, if any.

24. SIGNED: Ed Lafaye — TITLE: Chief Geologist — DATE: 7/10/81
Ed Lafaye

(This space for Federal or State office use)

PERMIT NO. ——————

APPROVAL DATE ——————

APPROVED BY ——————

TITLE ——————

CONDITIONS OF APPROVAL, IF ANY:

APPROVED BY THE STATE
OF UTAH DIVISION OF
OIL, GAS, AND MINING
DATE: 10/23/81
BY: [signature]

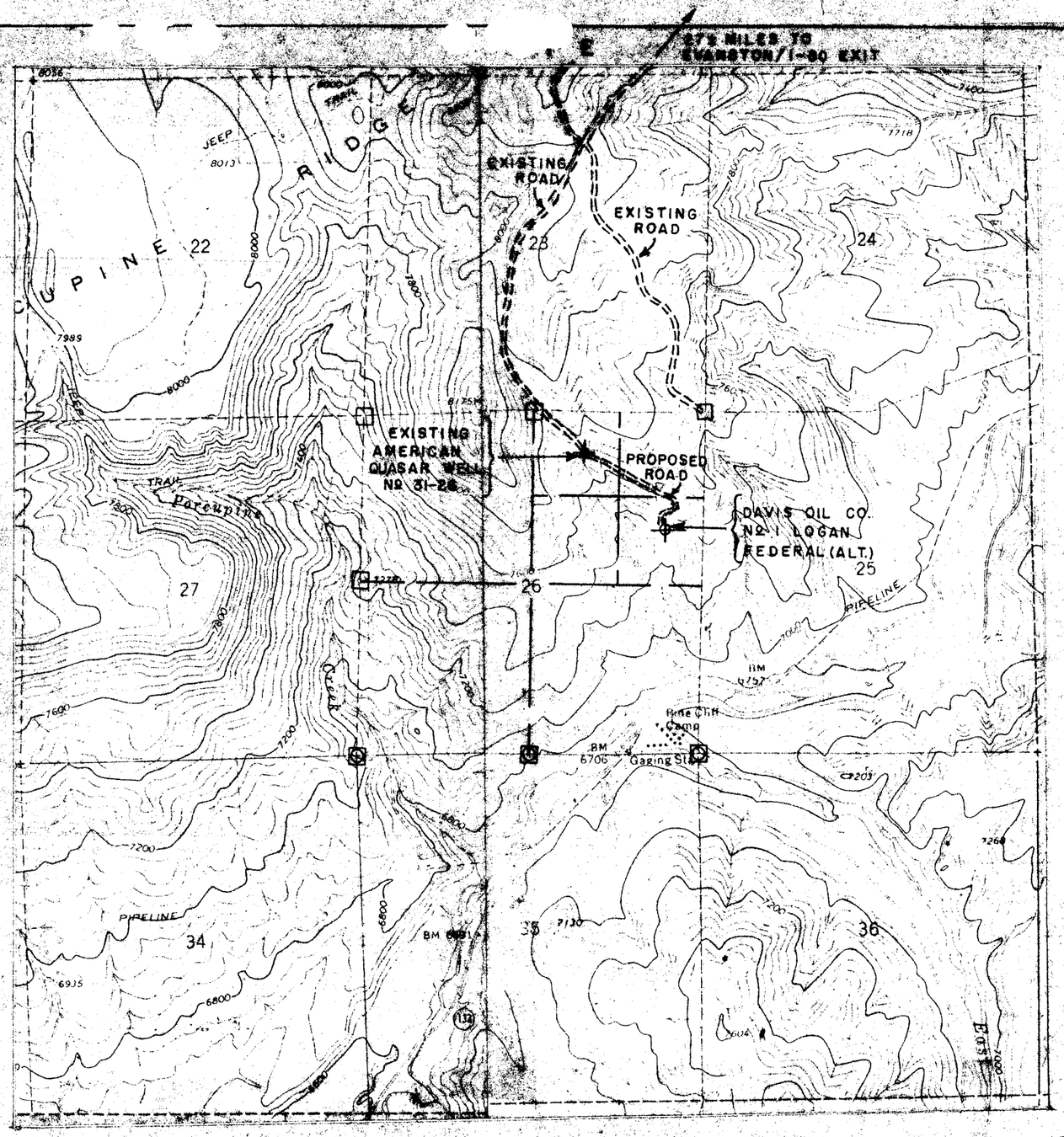


## VICINITY MAP

SCALE: 1"=2000'

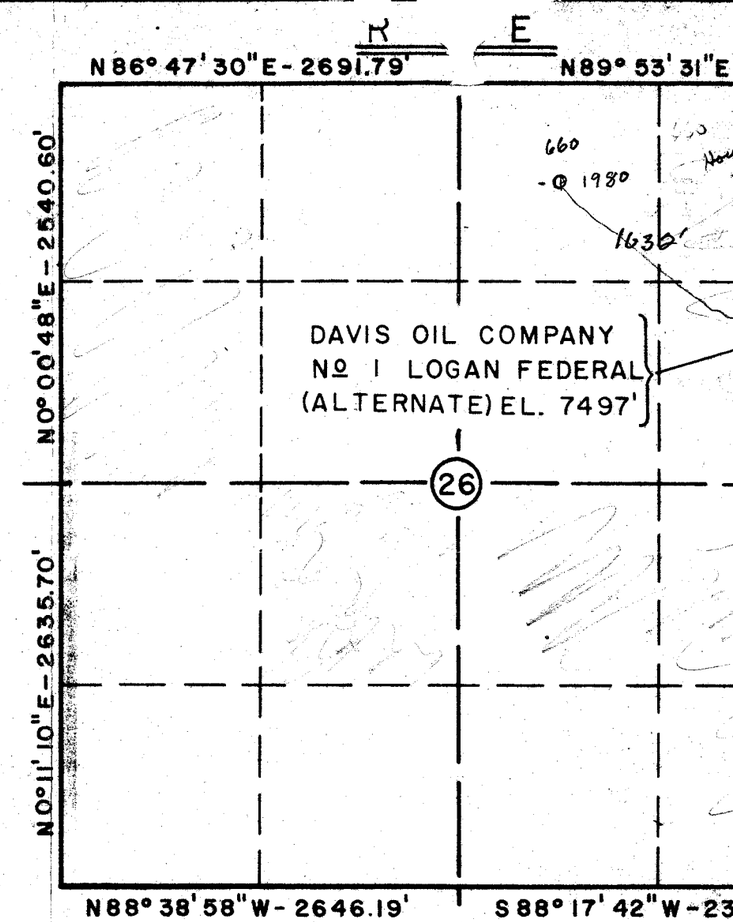


## LOCATION MAP

SCALE: 1"=1000'

**REFERENCE POINTS**

| LOCATION | ELEV. |
|---|---|
| N 200' | 7535' |
| NE COR. | — |
| E 200' | 7450' |
| SE COR. | 7416' |
| S 200' | 7440' |
| SW COR. | 7401' |
| W 200' | 7461' |
| NW COR. | 7536' |

**NOTES:**

-PIPE CORNERS LOCATED, -STONE CORNERS LOCATED

B.M. - U.S.G.S. Y161 (1962) ELEV. 6691'

U.S.G.S. QUAD - RED HOLE, UTAH - WYOMING

REGISTERD LAND SURVEYOR
4806
JOSEPH W. MANATOS
STATE OF UTAH

## CERTIFICATE OF SURVEYOR

STATE OF WYOMING
COUNTY OF SWEETWATER } S.S.

I, JOSEPH W. MANATOS, OF ROCK SPRINGS, WYOMING DO HEREBY CERTIFY THAT THIS MAP CORRECTLY SHOWS THE WELL LOCATION MADE FOR DAVIS OIL COMPANY ON AUGUST 14, 1981.

Joseph W. Manatos

UTAH R. L. S. NO. 4806

SHOWING

DAV

Nº 1 LO

SE1/

SUM

JOHNSON-

RO

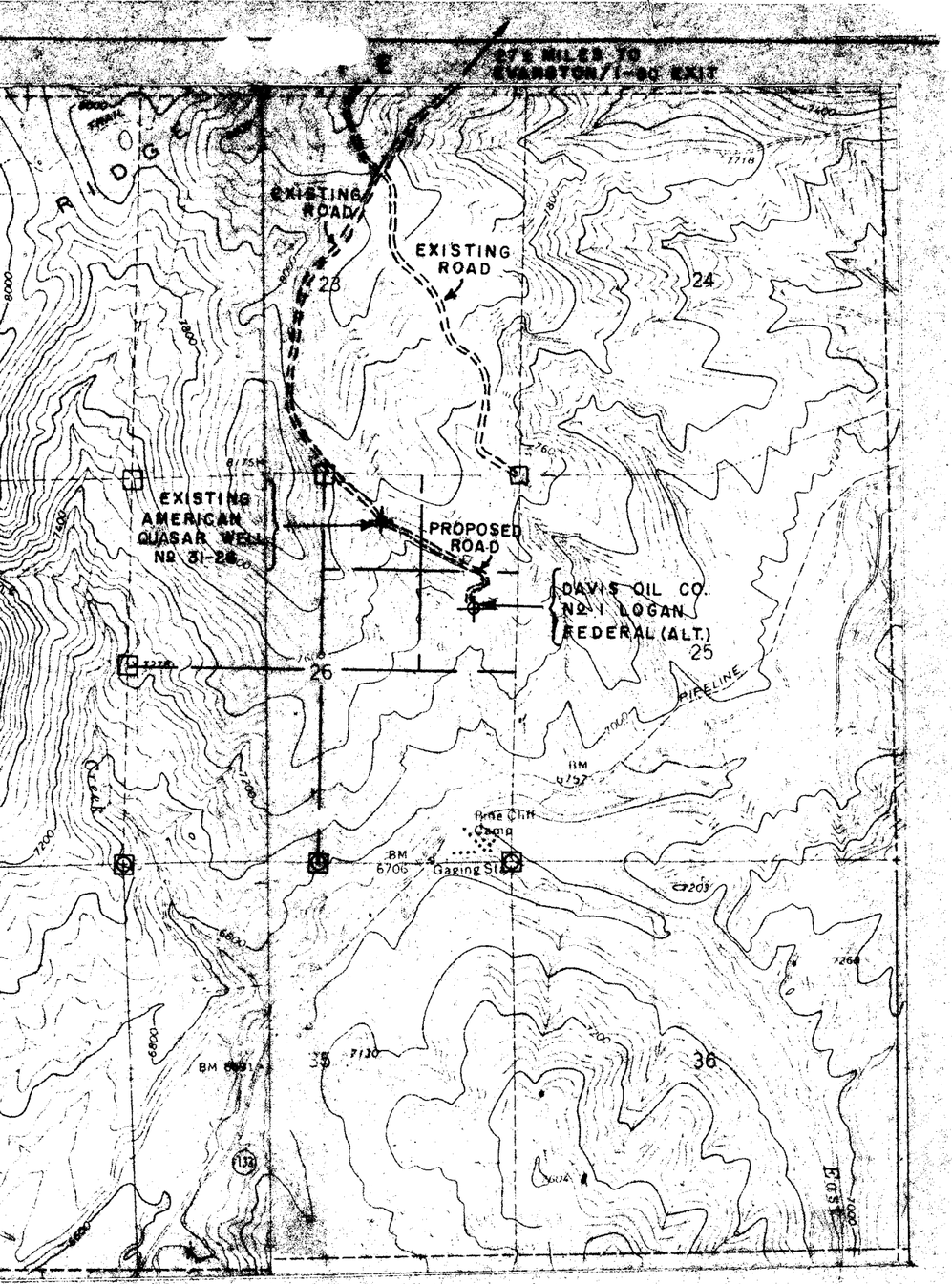


## VICINITY MAP

SCALE: 1" = 2000'

ATED, ⊕-STONE CORNERS LOCATED
) ELEV. 6691'
E, UTAH - WYOMING

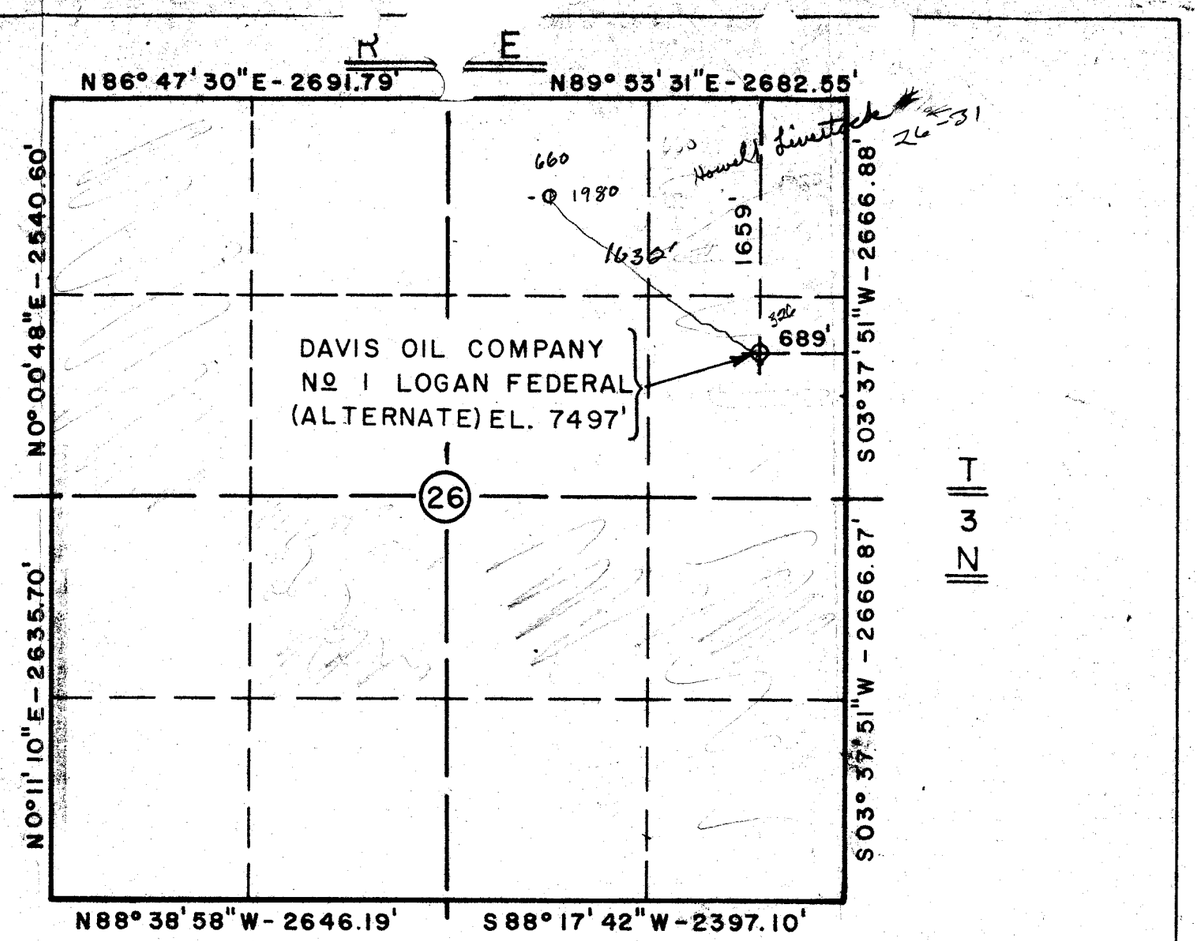


## LOCATION MAP

SCALE: 1" = 1000'

### REFERENCE POINTS

| LOCATION | ELEV. |
|---|---|
| N 200' | 7535' |
| NE COR. | — |
| E 200' | 7450' |
| SE COR. | 7416' |
| S 200' | 7440' |
| SW COR. | 7401' |
| W 200' | 7461' |
| NW COR. | 7536' |

### CERTIFICATE OF SURVEYOR

STATE OF WYOMING
COUNTY OF SWEETWATER } S.S.

I, JOSEPH W. MANATOS, OF ROCK SPRINGS, WYOMING DO HEREBY CERTIFY THAT THIS MAP CORRECTLY SHOWS THE WELL LOCATION MADE FOR DAVIS OIL COMPANY ON AUGUST 14, 1981.

Joseph W. Manatos
UTAH R. L. S. NO. 4806

REGISTERD LAND SURVEYOR
4806
JOSEPH W. MANATOS
STATE OF UTAH

## MAP SHOWING WELL LOCATION FOR DAVIS OIL COMPANY

Nº 1 LOGAN FEDERAL (ALTERNATE)
SE1/4 NE1/4, SECTION 26
T 3 N, R 7 E

SUMMIT COUNTY, UTAH

JOHNSON-FERMELIA & CRANK, INC.
ROCK SPRINGS, WYO.

JOB NO. 850-0781-1 TG

# TEN POINT PROGRAM

1) SURFACE FORMATION: Knight

2 & 3) ESTIMATED TOPS: (Water, Oil, Gas or Mineral bearing formations)

| | | |
|---|---|---|
| Knight | surface | discontinuous water-bearing sandstones; no oil and gas |
| Echo Canyon | 3120' | same |
| Kelvin | 3860' | same |
| Stump | 8420' | impermeable sandstones, shales, and lime stones, possible oil and gas in fracture |
| Preuss | 10650' | siltstones, shales and salt; no oil and gas |
| Twin Creek | 10980' | interbedded shales and limestones; possible oil and gas |
| Gypsum Springs | 12280' | impermeable shale; no oil and gas |
| Nugget | 12330' | porous and permeable sandstones; possible oil and gas |
| Total Depth | 15000' | impermeable siltstones and sandstones; no oil and gas |

4) CASING PROGRAM: 17 1/2", 13 3/8" 54.5# K-55 STC(NEW) 0-1500' 1300 sxs. est.
12 1/4", 9 5/8" 53.5# N-80 LTC(NEW) 0-160'
12 1/4", 9 5/8" 40# N-80 LTC(NEW) 160-4700'
12 1/4", 9 5/8" 47# N-80 LTC(NEW) 4700-6800'
12 1/4", 9 5/8" 53.5# N-80 LTC(NEW) 6800-8500' 1000 sxs. est.
8 1/2", 7" 38# P-110 LTC(NEW) 0-80' continued on back page

5) PRESSURE CONTROL EQUIPMENT: (See attached schematic diagram) BOP's and choke manifold will be installed and pressure tested before drilling out under surface casing and then will be checked daily as to mechanical operating condition. Ram type preventors and related pressure control equipment will be pressure tested to rated working pressure of the stack assembly or to 70% of the minimum internal yield pressure of the casing. Annular type preventors will be tested to 50% of their rtaed working pressure. BOP's will be pressure tested at least once every 30 days.

6) MUD PROGRAM:
0-1500' spud mud
1500-8500' LSND Maximum mud weight 9.1-9.5 ppg based on offset of wells
8500-15,000' LSND Maximum mud weight 9.5-10.1 ppg based on offset of wells. 35-45 vis., 10-12 cc W.L., PH 9-10.

Sufficient mud materials to maintain mud properties, control lost circulation and to contain blowout will be available at wellsite.

7) AUXILLIARY EQUIPMENT:

1) Kelly Cock.
2) Drill Pipe Float (Except for lost circulation drilling conditions)
3) Monitoring of Mud System will be visual unless otherwise specified.
4) A sub on the floor with a full opening valve to be stabbed into drill pipe when Kelly is not in the string.

8) LOGGING:
DIL or BLL - from base of surface casing to total depth.
DIL prior to surface casing; Gamma Ray over surface casing; FDC-CNL sonic and Dipmeter from base of surface casing to total depth. Frac log over zones where needed.

CORING:
NONE

8) Continued -

TESTING:

DST's as needed to evaluate Cretaceous, Stump, Twin Creek and Nugget (estimate 3)

STIMULATION:

Nugget Formation - acidize with 5000 gallons HCL. Frac with 60,000 gallons with 20/40 propant.

Actual volume of treatment will be dependent upon thickness of pay and evaluation of zone of interest.

9) ABNORMAL PRESSURE: This firm does not anticipate any abnormal pressure of temperatures or any other hazards. This is based on previous geological data from nearby wells.

ESTIMATED BOTTOMHOLE PRESSURE: 6500 PSI.

10) ANTICIPATED STARTING DATE: Within 30 - 45 days from Government approval.

DURATION OF OPERATION: 30-60 Days.

CASING CONTINUED:

8 1/2", 7" 26# P-110 LTC(NEW) 80-2160'
8 1/2", 7" 29# N-80 LTC(NEW) 2160-3920'
8 1/2", 7" 26# N-80 LTC(NEW) 3920-5200'
8 1/2", 7" 29# N-80 LTC(NEW) 5200-9200'
8 1/2", 7" 32# N-80 LTC(NEW) 9200-10,480'
8 1/2", 7" 38# P-110 LTC(NEW) 10,480-11,040'
8 1/2", 7" 32# N-80 LTC(NEW) 11,040-13,360'
8 1/2 , 7" 35# N-80 LTC(NEW) 13,360-15,000 1500 sxs. est.

Parker Drilling
Rig 163

13 5/8" ~~5000 PSI~~ WP B.O.P. System ($H_2S$ T21M)
1 - Shaffer 13 5/6" Spherical (Studded top, Flg. bottom)
2 - Shaffer 13 5/8" LWS, Single Rams (Studded top & bottom)
2 - Type 'D' Spools (Flanged top & bottom)
1 - 4" Shaffer Hyd Gate Galve, 5000 PSI
1 - 4" Shaffer Manual Gate Valve, 5000 PSI
1 -3" Cameron check valve

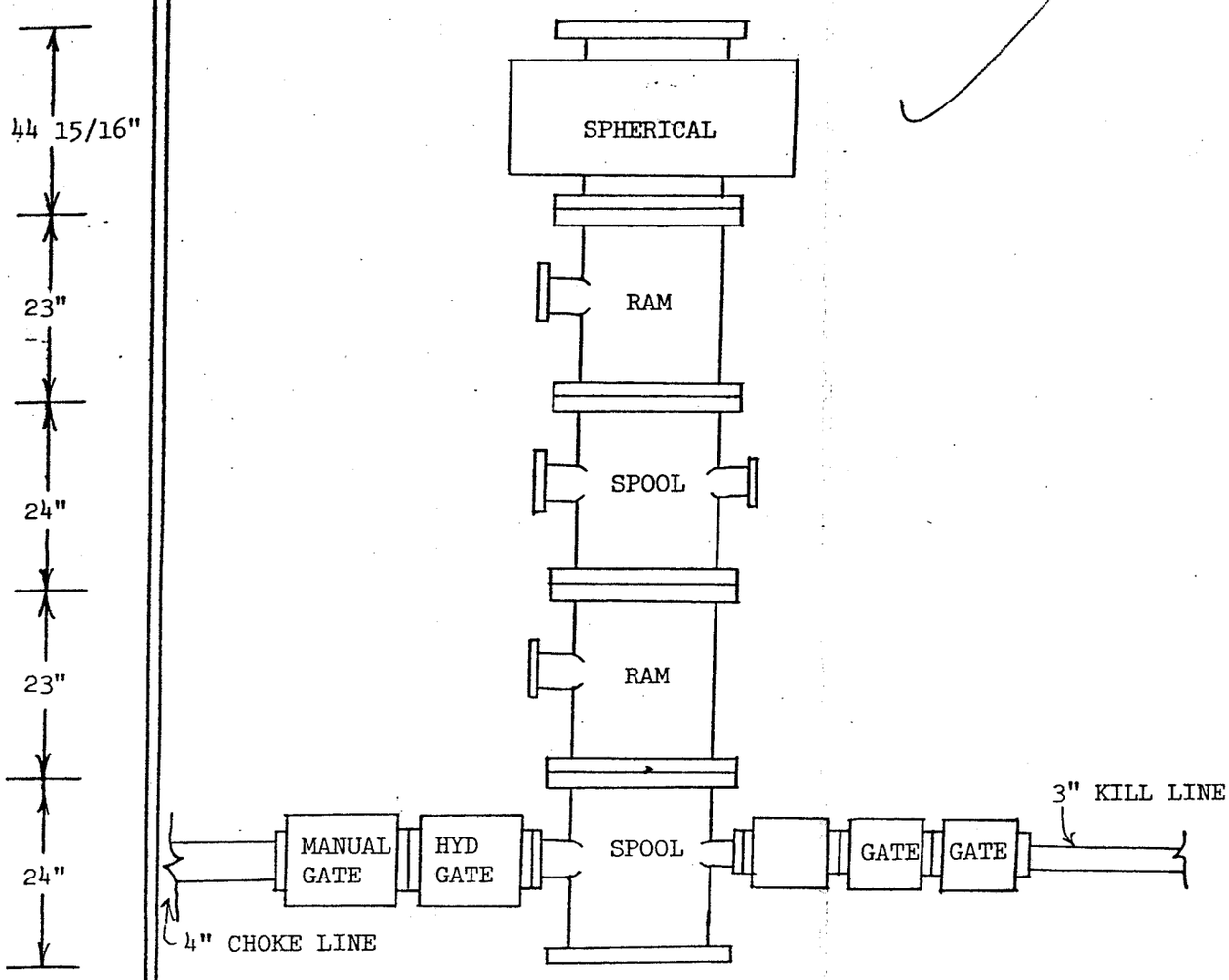

UTAH
Summit County
Location: SENE Sec. 26 R3N R7E
Lease: U-47812

LOGAN FEDERAL #1

12-16-82 RURT

12-17-82 RURT

12-18-82 RURT

12-19-82 RURT

12-20-82 RURT

12-21-82 Spud well @ 8:30 P.M. on 12-20-81. Drlg. to 142'. S/S. MW spud mud.

12-22-81 Drlg. to 270'. Made 130'. S/S. Dev. 3/4° @ 188'. MW 8.8 ppg. Vis. 35 seconds. WL 34.

12-23-81 Drlg. to 311'. Made 41'. S/S. Dev. 1° @ 288'. Hooked up RPM counter. MW 9.0 ppg. Vis. 34 seconds. WL 25.

12-24-81 Drlg. to 521'. Made 210'. S/S. Dev. ¼° @ 460'. MW 9.0 ppg. Vis. 38 seconds. WL 38.

12-25-81 Drlg. to 657'. Made 136'. S/S. Dev. 1° @ 545'. MW 9.2 ppg. Vis. 35 seconds. WL 29.

12-26-81 Drlg. to 751'. Made 94'. S/S. Dev. 1¼° @ 747'. MW 9.0 ppg. Vis. 37 seconds. WL 31.

12-27-81 Drlg. to 894'. Made 143'. Shale. Dev. 1¼° @ 872'. MW 9.1 ppg. Vis. 38 seconds. WL 19.

12-28-81 Drlg. to 1020'. Made 126'. Dev. 1¼° @ 968'. Circulated to ream. MW 9.2 ppg. Vis. 37 seconds. WL 20.

12-29-81 Depth @ 1020'. Reamed out of hole from 720'=700'. Layed down IBS and 2 DC's. MW 9.2 ppg. Vis. 43 seconds. WL 20.

12-30-81 Depth @ 1020'. Frontier. Reamed. MW 9.0 ppg. Vis. 37 seconds. WL 28.

12-31-81 Depth @ 1020'. Frontier. Reamed. MW 9.1 ppg. Vis. 38 seconds. WL 24.

1-1-82 Depth @ 1020'. Frontier. Reamed. MW 9.3 ppg. Vis. 39 seconds. MW 26.

1-2-82 Depth @ 1020'. Frontier. Reamed. TOH. Dev. 1¼° @ 1000'. MW 9.7 ppg. Vis. 40 seconds. WL 23.2.

UTAH
Summit County
Wildcat Field
Location: SENE Sec. 26 T3N R7E
Lease: W-47812

LOGAN FEDERAL #1

1-3-82 Depth @ 1023'. Frontier. Filled csg. Ran 25 jts. 26#, K-55, 9 5/8" csg. Set @ 1008' KB. Cmtd with 916 sxs. of Halco lite cement followed by 850 sxs. of Class "G" cement. Plugged down @ 1:30 P.M. on 1-3-82. MW 9.7 ppg. Vis. 40 seconds. WL 23.

1-4-82 Depth @ 1023'. Frontier. TOH with drill pipe. WOO. Cut off casing. Nipple up. MW 9.6 ppg. Vis. 41 seconds. WL 23.

1-5-82 Depth @ 1023'. Frontier. Nipple up. MW 9.4 ppg. Vis. 42 seconds. WL 11.8.

1-6-82 Depth @ 1023'. Frontier. Nipple up and checked BOP. MW 9.3 ppg. Vis. 42 seconds. WL 11.7.

1-7-82 Depth @ 1023'. Drld. cement. MW 9.3 ppg. Vis. 42 seconds. WL 11.7.

1-8-82 Drlg. to 1100'. Made 67'. S/S. (drlg. new hole) Made up BHA. MW 9.1 ppg. Vis. 38 seconds. WL 19.8.

1-9-82 Drlg. to 1275'. Made 175'. Chalk Creek. Dev. ½° @ 1205'. MW 9.1 ppg. Vis. 32 seconds. WL 17.8.

1-10-82 Drlg. to 1440'. Made 165'. Chalk Creek. Dev. 3/4° @ 1343'. MW 9.1 ppg. Vis. 39 seconds. WL 9.6.

1-11-82 Drlg. to 1563'. Made 123'. Chalk Creek. Dev. 3/4° @ 1522'. MW 9.4 ppg. Vis. 39 seconds. WL 10.2.

1-12-82 Drlg. to 1795'. Made 232'. Chalk Creek. Dev. 3/4° @ 1684'. MW 9.5 ppg. Vis. 44 seconds. WL 10.2.

1-13-82 Drlg. to 2035'. Made 240'. Chalk Creek. Dev. ½° @ 1994'. MW 9.6 ppg. Vis. 41 seconds. WL 7.9.

1-14-82 Drlg. to 2081'. Made 46'. Chalk Creek. TOH. Inspected BHA. Made new BHA. MW 9.7 ppg. Vis. 41 seconds. WL 7.8.

1-15-82 Drlg. to 2342'. Made 261'. Chalk Creek. Dev. 1° @ 2280'. Reamed. MW 9.6 ppg. Vi s. 37 seconds. WL 8.

UTAH
Summit County
Wildcat
Location: SENE Sec. 26 T3N-R7E
Lease: W-47812

FEB 19 2

DIVISION OF
OIL, GAS & MINING

Logan Federal #1

1-16-82 Drlg. to 2616'. Made 274'. Chalk Creek. Dev. 1 1/8° @ 2508'. MW 9.3 ppg. Vis. 39. seconds. WL 8.

1-17-82 Drlg. to 2857'. Made 241'. Chalk Creek. Dev. 1 1/8° @ 2663'. MW 9.5 ppg. Vis. 35. seconds. WL 9.7.

1-18-82 Drlg. to 3028'. Made 171'. Frontier. Dev. 1 7/8° @ 3010'.

1-19-82 Drlg. to 3138'. Made 110'. Frontier. Reamed. MW 9.6 ppg. Vis. 35. seconds. WL 10.4.

1-20-82 Drlg. to 3276'. Made 138'. Chalk Creek. Dev. 2° @ 3192'. MW 9.6 ppg. Vis. 41. seconds. WL 8.2.

1-21-82 Drlg. to 3430'. Made 154'. Frontier. Dev. 3/4° @ 3347'. MW 9.6 ppg. Vis. 42 seconds. WL 8.9.

1-22-82 Drlg. to 3608'. Made 178'. Frontier. Dev. 2¼° @ 3504'. MW 9.5 ppg. Vis. 42 seconds. WL 9.3.

1-23-82 Drlg. to 3722'. Made 114'. Frontier. Dev. 1-3/4° @ 3687'. MW 9.4 ppg. Vis. 40 seconds. WL 9.2.

1-24-82 Drlg. to 3820'. Made 98'. Frontier. Dev. 1½° @ 3816'. MW 9.4 ppg. Vis. 42 seconds. WL 8.4.

1-25-82 Drlg. to 3968'. Made 148'. Frontier. MW 9.3 ppg. Vis. 41 seconds. WL 8.4.

1-26-82 Drlg. to 4088'. Made 120'. Frontier. Dev 2½° @ 4079'. Dev. 2½° @ 4079'. MW 9.5 ppg. Vis 45 seconds. WL 8.5.

1-27-82 Drlg. to 4122'. Made 34'. Frontier. Rig repair. MW 9.5 ppg. Vis 41 seconds. WL 8.6.

1-28-82 Depth @ 4122'. Frontier. Worked on light plant-rig repair. Magnafluxed BHA & PU BHA. MW 9.7 ppg. Vis. 46 seconds. WL 8.2.

1-29-82 Repaired light, plant & generator. PU BHA. Drlg. to 4202' Made 80'. S/S. MW 9.4 ppg. Vis. 41 seconds. WL 9.2.

1-30-82 Drlg. to 4305'. Made 103'. Frontier. Dev. 3° @ 4250'. MW 9.6 ppg. Vis. 41 seconds. WL 7.5.

1-31-82 Drlg. to 4335'. Made 30'. Frontier. Cleaned mud pits, mixed mud. MW 9.6 ppg. Vis. 42 seconds. WL 7.9.

2-1-82 Drlg. to 4437'. Made 102'. Frontier. Dev. 3¼° @ 4374'. MW 9.2 ppg. Vis 37 seconds. WL 8.6.

2-2-82 Drlg. to 4670'. Made 233'. Frontier. Dev 1-3/4° @ 4650'. MW 9.4 ppg. Vis 42 seconds. WL 8.

2-3-82 Drlg. to 4875'. Made 205'. Lower Frontier. Dev. 4° @ 4839'. MW 9.4 ppg. Vis. 43 seconds. WL 7.7.

2-4-82 Drlg. to 4993'. Made 118'. String Canyon. Dev. 4° @ 4902'. MW 9.3 ppg. Vis. 44 seconds. WL 8.

2-5-82 Drlg. to 5168'. Made 175'. Frontier. Dev. 3¼° @ 5041'. MW 9.3 ppg. Vis. 41 seconds. WL 8.4.

2-6-82 Drlg. to 5386'. Made 218'. Frontier. Dev. 2-3/4° @ 5225'. MW 9.1 ppg. Vis 42 seconds. WL 8.8.

2-7-82 Drlg. to 5471. Made 85'. Frontier. MW 9.1 ppg. Vis. 44 seconds. WL 8.2.

2-8-82 Drlg. to 5687'. Made 216'. Frontier. Dev. 2½° @ 5605. MW 9.3 ppg. Vis. 39 seconds. WL 8.2.

2-9-82 Drlg. to 5730'. Made 43'. Frontier. DP screwed off. TIH to fish. Worked stuck pipe. MW 9.4 ppg. Vis. 39 seconds. WL 8.3.

2-10-82 Depth at 5730'. Frontier. Lay down bent DP-16jts. Inspected BHA. TIH with globe basket. PU DP. Washed over fish. MW 9.3 ppg. Vis. 41 seconds. WL 8.1.

2-11-82 Depth at 5730'. Frontier. Chain out hole with basket. Rec. fish except for two cones. Logged. Cut drlg. line. Reamed. Circ. and cond. MW 9.5 ppg. Vis. 45 seconds. WL 8.3.

2-12-81 Depth at 5730'. Frontier. TOH to run 13 3/8" csg. RU & Ran:
27 jts. 72#, S-95 Butt.,
37 jts. 72#, S-80 ST&C,
14 jts. 68#, C-95 Butt.,
4 jts. 68#, N-80 Butt.,
4 jts. 68#, K-55 Butt.,
49 jts. 54½#, K-55 ST&C, and
3 jts. 72#, S-80 ST&C casing.
Set csg. at 5730' KB. Cmtd. with 1000 sxs. of Halco Light followed by 700 sxs. of class "G". Plugged down at 1:10 PM, 2-12-82. MW 9.5 ppg. Vis. 46 seconds.

2-13-82 Depth at 5730'. Frontier. Cmtd. & rig down. WOC. Set slips and cut csg. LD Kelly and DC's. Nipple down. MW 9.5 ppg. Vis. 46 seconds.

2-14-82 Depth at 5730'. Frontier. Finished Nipple down stack. Nipple up and test BOP.

2-15-82 Depth at 5730'. Frontier. Tested BOP. Lay down DC's. Worked on Hydril and BOP rams. Tested choke line to 3500#- OK.

Davis Oil Company

UTAH
Summit County
Wildcat
Location: SENE Sec. 26 T3N-R7E
Lease: W47812

Logan Federal #1

2-16-82 Depth @ 5730'. Frontier. Repaired BOP. Tested BOP to 3500 PSI-OK. RIH - tagged cement at 5467'. Drlg. cmt. MW 9.8 ppg. Vis. 96 seconds.

2-17-82 Depth @ 5730'. Frontier. CIrc. POOH to 2525'. POOH to surface. PU RTTS & RIH to 5400'. POOH LD RTTS. PU BHA & RIH to 5730'. Built mud and worked cones. MW 9.3 ppg. Vis. 40 seconds. WL 9.6.

2-18-82 Depth @ 5730'. Frontier. Worked magnet. Milled.

2-19-82 Depth @ 5730'. Frontier. RIH w/ mill. Milled. Circ. Milled. No cone recovery. MW 8.9 ppg. Vis. 33 seconds. WL 14.1.

2-20-82 Depth @ 5730'. Frontier. PU globe basket & RIH. Milled. POOH - no recovery. RIH w/ flat bottom mill #2. Milled. MW 8.7 ppg. Vis. 38 seconds. WL 12.2.

2-21-82 Depth @ 5730'. Frontier. POOH-rec. 20 roller bearings ½" x 1¼". RIH w/ magnet. Worked magnet. POOH & PU globe basket. RIH. Milled. MW 8.7 ppg. Vis. 40 seconds. WL 11.2.

2-22-82 Depth @ 5730'. Spring Creek. Milled. Recovered junk. MW. 8.7 ppg. Vis. 89 seconds. WL 11.6.

2-23-82 Depth @ 5730'. Spring Creek. Made up junk basket. Circ. Worked on fish. Milled. MW -building volume.

2-24-82 Depth @ 5730'. Spring Creek. Milled. Recovered junk. SLM. Work magnet. MW 8.6 ppg. Vis. 35 seconds.

2-25-82 Depth @ 5730'. Spring Creek. Logged. Csg. parted. Milled. Circ. Recovered junk.

2-26-82 Depth @ 5730'. Spring Creek. Worked magent. Milled on junk. PU hydrostatic baylor. MW 8.6 ppg. Vis. 33 seconds. WL 4.6.

2-27-82 Depth @ 5730'. Spring Creek. Worked hydrostatic baylor at 5683'. Milled. Recovered junk. MW 8.5 ppg. Vis. 33 seconds. WL 14.8.

2-28-82 Depth @ 5730'. Spring Creek. PU the hydrostatic baylor. Worked through 5683'. Worked tool through bottom - no recovery. MW 8.6 ppg. Vis. 32 seconds. WL 14.8.

3-1-82 Depth @ 5730'. Spring Creek. Milled cones. Fished. Recovered junk. Fished. MW 8.5 ppg. Vis. 33 seconds. WL 14.0.

3-2-82 Depth @ 5730'. Spring Creek. TIH w/ magnet. Rec. junk. Milled MW 8.5 ppg. Vis. 33 seconds. WL 14.7.

3-3-82 Depth @ 5730'. Spring Creek. TIH w/ speer. Did not tag. TOOH PU magnet & boot basket. TOOH recovered junk. Circ. Made up new BHA. MW 8.5 ppg. Vis. 33 seconds. WL 14.8.

3-4-82 Depth @ 5730'. Spring Creek. TIH. Milled. Tagged fish & pushed 2.5'. TIH w/ overshot mill. MW 8.5 ppg. Vis. 33 seconds. WL 12.2.

3-5-82 Depth @ 5730'. Spring Creek. Milled on fish. Caught fish. Worked fish out of parted csg. Broke out & dressed fish. Recovered junk. Made up BHA w/ taper mill. TIH w/ taper mill. Worked through parted csg. MW 8.6 ppg. Vis. 32 seconds. WL 14.4.

3-6-82 Depth @ 5730'. Spring Creek. PU & worked on alignment tool & packard. TIH w/ BHA. MW 8.6 ppg. Vis. 32 seconds.

3-7-82 Depth @ 5730'. Spring Creek. Cmtd. Worked pipe. TIH w/ screw in sub. MW 8.6 ppg. Vis. 33 seconds.

3-8-82 Depth @ 5730'. Spring Creek. Made up BHA. Tagged cmt. Milled on cmt. PU BHA. TIH w/ washover shoe. MW 8.6 ppg. Vis. 45 seconds. WL 14.

3-9-82 Depth @ 5730'. Spring Creek. Milled over tool. Washed. Milled. Reamed. TOOH w/ washover shoe. MW 8.5 ppg. Vis. 43 seconds. WL 23.

3-10-82 Depth @ 5730'. Spring Creek. Spring Creek. TOH w/ shoe #2. PU 2 jts. of wash pipe & BHA. TIH. Milled over centralizer wt. pipe - found cement below - shoe wore out @ 2657.95'. TOH w/ shoe #3. Worked BHA - changed shoe. TIH w/ shoe #4. Reamed over fish to 5657.95'. Milled over fish. MW 8.5 ppg. Vis. 34 seconds. WL 24.6.

3-11-82 Depth @ 5730'. Spring Creek. Milled over top of fish from 5657.95' to 5663'. TOOH w/ mill #4. Rotated wash pipe & PU shoe #5. TIH. Milled & washed back to 5663'. MW 8.5 ppg. Vis. 35 seconds. WL 36.

3-12-82 Depth @ 5730'. Spring Creek. Washed over fish 5441' to 5667'. TOH. Worked BHA. TIH w/ screw in sub. MW 8.6 ppg. Vis. 35 seconds. WL 26.

3-13-82 Depth @ 5730'. Spring Creek. Top of fish 5522'. W/O depth 5667'. Made backoff @ 5582'. Fish now equal 3 jts. HWDP & setting tool. Top of fish 5582'. MW 8.5 ppg. Vis. 35 seconds. WL 17.

3-14-82 Depth @ 5730'. Spring Creek. Washed over fish to 5675'. TOOH. MW 8.5 ppg. Vis 34 seconds. WL 21.

3-15-82 Depth @ 5730'. Spring Creek. Wahsed in hole w/ shoe #7. Washed over fish to 5677' - top of sq. packer. Washed in hole & screwed BHA into top of fish. Jarred on fish. MW 9 ppg. Vis. 40 seconds. WL 20.

UTAH
Summit County
Wildcat Field
Location: SENE Sec. 26 T3N R7E
Lease: W-47812

Logan Federal #1

3-15-82 Depth @ 5730'. Spring Creek. Washed in hole w/ shoe #7. Washed over fish to 5677' - top of sq. packer. Washed in hole & screwed BHA into top of fish. Jarred on fish. MW 9.0 ppg. Vis. 40 seconds. WL 20.

3-16-82 Depth @ 5730'. Spring Creek. Jarred on fish. No movement. RU wire line. Ran sinker bar to 5586'. Ran string shot #1, miss fired. Ran Ran string shot #2, backed off @ 5282'. RD. PU BHA to wash over pipe TIH to wash over fish (no fill). Milled on fish, wt to RPM 45-PSI 800. Tagged up on fish at 5677'. No fill. Mileld @ 5678'. Milled over packer. Top of packer 5678'. MW 8.6 ppg. Vis. 38 seconds. WL 21.

3-17-82 Depth @ 5730'. Spring Creek. Milled on packard w/ shoe #7. TOOH w/ shoe #7. Shoe smooth on bottom. MW 8.6 ppg. Vis. 40 seconds. WL 24.

3-18-82 Depth @ 5730'. Spring Creek. TIH w/ shoe #8. Washed to 5686'. Stuck wash pipe @ 5686'. Worked free w/ torque & pump pressure. Milled on fish to 5686'. TOOH, LD wash pipe & shoe. PU jarring assembly & TIH. MW 8.6 ppg. Vis. 51 seconds. WL 24.

3-19-82 Depth @ 5730'. Spring Creek. TOOH w/ fish - fill coming out of hole. PU 6-3/8" grapple. TIH, caught fish. Recovered 3 jus. wt pipe. Milled off pipe filled w/ green cmt. LD fish & PU shoe & wash out pipe. Dropped 1 wash over thread in hole. TIH, tagged fish @ 5678'. MW 8.7 ppg. Vis. 49 seconds. WL 25.

3-20-82 Depth @ 5730'. Spring Creek. Washed over fish. Tagged @ 5678', circ. mud. Swepth loose pieces from hole. Milled to 5686' on rubber & metal. POOH w/ mill #9 - worn smooth - recovered scrap metal. PU boot basket & milled #10 & RIH. Milled on packer rubber. Ran sweeps. Hole clean. Milled post tip rubber, stopped on bottom rubber when mill wore out. POOH w/ mill #9. MW 8.6 ppg. Vis. 41 seconds. WL 24.

UTAH
Summit County
Wildcat Field
Location: SENE Sec. 26 T3N-R7E
Lease: W-47812

Logan Federal #1

3-21-82 Depth @ 5730'. Spring Creek. POOH w/ mill #11 - worn on entire wory section. Boot basket recovered 1 pint of metal chips. Removed float valve & RIH w/ mill #12. Tagged @ 5678'. Milled, ran mud sweeps to 5699', recovered soft cement & aluminum. Chain out of hole. Mill 90% worn out. RIH w/ mill #13. Flat bottom. MW 8.6 ppg. Vis. 41 seconds. WL 24.

3-22-82 Depth @ 5730'. Spring Creek. TIH w/ flat bottom shoe #13. Tagged fish @ 5675.5'. Worked down to 5696.5'. Depth reached on Shoe #12 wouldn't pass 5696.5'. Dropped glass. Ran mud sweeps. Spudded. Drilled dry - no progress. Spudded on it, TOOH 35 stands wet came dry - no recovery in shoe - shoe smooth. Recovered some iron in boot basket. PU 10" overshot. TIH, tagged fish @ 5683'. Worked over fish to 5692'. Max. shallow on tool is 6', went over 8', latched on & pulled up 3000' over pull came out wet 35 stands. Came dry. Recovered nothing. Latched over alignment tool before coming loose. PU 5' extention on overshot. TIH w/ 10" overshot. MW 8.6 ppg. Vis. 44 seconds. WL 24.

3-23-82 Depth @ 5730'. TIH w/ 10" grapples, #2 run. Worked over fish shoe - would not pass 5683' to 5685'. Worked, fell free to 5694'. TOH - no recovery, grapple turned up-side-down & broke ware markers. PU 9-7.8" grapple w/ extention. TIH, worked over fish to 5683' - 5685' hard time. Worked over centralizer to 5695'. Set grapple. TOH - grapples broke - no recovery. Showed grapples on aluminum. DU auto spring grapple. TIH. MW 8.6 ppg. Vis. 44 seconds. WL 17.

3-24-82 Depth @ 5730'. Spring Creek. Tagged fish @ 5684'. Slid over to 5695'. Worked 11' of pipe till had wt. each time. PU Max over pull 22,000. Final pul had 5000 over string, had torque wt. indicator bobbing. TOH, recovered 11' 7" of aluminum pipe. Pipe cut down the middle 2 stablizer fins on top of pipe. Bottom 4 broke off. Did not recover pkg. or assembly. Indications of burned shoe. Cut 3" on outside of csg. RU McCullough & tried to run logs CBL, VDL, CCL & gamma electronic - would not work. RD. LD & load out Wilson tools. RU McCallough equipment, reran logs - short in head & a card. PU Baker 13-3/8. Cement retainer & TIH. MW 8.6 ppg. Vis. 42 seconds.

3-25-82 Depth @ 5730'. Spring Creek. TIH w/ Baker cement retainer on wire line. Set retainer @ 5670'. PU Baker Stinger. TIH. String in test annular to 1000 PSI. RU Dowell test lines to 2500 PSI. Tried to estimate rate ½ Bbl. per min. - would not break down. Max. pressure 2000 PSI, blead off. Repressured to 2000 PSI - solid pulled stinger & circ. above pkg. & TOH. PU BHA, TIH. Drlg. cmt retainer to 5670'. Circ. Repaired air compressor. TOH. MW 8.9 ppg. Vis. 36 seconds. WL 18.

3-26-82 Depth @ 5730'. Spring Creek. TIH w/ bit. Repaired air lines, changed air compressor. TIH w/ concave. Mill #1. Tagged @ 5691½'. Worked mill from 5680½' to 5691½'. Milled from 5691½' to 5697½'. Recovered80% aluminum, 20% cement & pkg. rubber, 5695½' to 5697½'. Milled on rubber. TOH, recovered pkg. slip sec. PU 12¼" bit. TIH. Drlg. on rubber to 5699'. Worked bit. TOH, called out McCallough to log. MW 8.6 ppg. Vis. 41 seconds. WL 17.

3-27-82 Depth @ 5730'. Spring Creek. TOH w/ 12¼" M4N Bit. RU McCullough. Ran ECC-would not pass 5656', spudded stopped @ 5656'. TOH. Logged 500' off bottom & all csg. wt & changed. Logs showed csg. wear. 5500'to 5656' logging coil showed gauges & tear on outside of coil. TOH, adjust centralizers to 15½ & re ran logs-wouldn't pass 5656' after spudding. TOH, ran csg. CCL 3½" OD stopped 5683'. Worked to 5695'. Logged. Logs indicated csg. damage from 5694' to 5684'. Possible parting of csg at 5684'. to 5682'. Worn CSG 5504' to 5684', flat collar 5608' to 5612'. PU new BHA & concave mill #1. TIH, tagged @ 5695' after working past 5683'. Milled to 5699'. Returns 98% cmt, ¼% steel & iron, 1-3/4% aluminum, no sand or shale. MW 8.6 ppg. Vis. 39 seconds. WL 17.

3-28-82 Depth @ 5730'. Spring Creek. Milled #1 from 5699' to 5706'. Repaired rig cooling system #2 motor, changed oil compound. Milled 5606' to 5780½' lost all torque. TOH, cleaned boot basket. PU mill #2. TIH, recovered 2 gal. of metal in baskets, 4 slips in - wtr. way mill. Worked bit past 5683'. MW 8.7 ppg. Vis. 53 seconds. WL 12.4.

3-29-82 Depth @ 5730'. Spring Creek. Working concave mill through 5683' - would not go. TOH. PU taper mill & wtr. Milling mill & IBS, TIH. Repaired rotory clutch & replaced pads. Milled, worked mill through 5683', tagged bottom tools @ 5708'. Milled on bottom while circ. HI Vis. pull. TOH. Repaired tong hanger line. PU 8-bladed mill & BHA. TIH. MW 8.7 ppg. Vis. 63 seconds. WL 14.8.

3-30-82 Depth @ 5665'. (Plug back) Spring Creek. RIH. Worked 8-bladed mill @ 5683'. Would not pass. Spudded-no torque @ 40,000#. Would not drill off. Pumped into formation to est. formation pressure. POOH w/ mill, smooth. Boot basket full of lg. cmt. pieces, sm. steel chips, flat aluminum pieces. PU 12" taper mill, short DC, 12½" water melon mill. RIH. Tried to work past parted csg. @ 5683'. Sit down & pump press increased from 900 to 1800 psi - rotated - no torque - pum press down to 900, mill would not pass parted cag - appears to be outside of csg. POOH, LD fishing tools. RU McCullough & RIH w/ Baker Cement Retainer. Set retainer @ 5665'. Correlated csg. collars. PU Baker Cement slinger & RIH. Circ. well bore. Slung into retainer @ 5665.53'. Closed pipe, pressed annulus to 1000 psi. - held OK. Pressure tested Dowell lines to 2500 psi. Pumped 30 BBL wtr./ 60 BBL of cmt - Class "G", 98.5 BBL wtr., left 2 BBL cmt in DP. Reversed out 2 BBL cart & 15.5 BBL's of mud. MW 8.7 ppg. Vis. 60 seconds. WL 15.

3-31-82 Depth @ 5730'. POOH. RU McCullough & Eastman & ran Gyroscipic survey @ 5650'. Closure SO 50° 58 min E., 161.2'. TVD 5646.1'. Ran CBL, no bond avove 5560' - bond questionable @ 5590' - 5625'. RIH w/ perferation gun, shot 5612' - 214, 2 shots/foot. 4" gun. Shut in blind rams - pressure to 1500 psi - would not take fluid. 2 BBL - 1500 psi. Reperferation 5612' 214, 6BBL per minute into foundation @ 1250 psi. shut in PU Baker cmt retainer - slip broke in V-door. WO paker. RIH w/ packer & set @ 5488.56'.

4-1-82 Depth @ 5665'. Est. rate of formation pressure. Tested heae @ 20# csg OK. Released psi & paker, TOH. PU BHA, 12¼" bit. TIH, tagged cmt @ 5568'. Drlg. cmt & washed to 5665', top of reatiner. MW 8.7 ppg. Vis. 43 seconds. WL 14.0.

4-2-82 Depth @ 5730'. Spring Creek. Drlg. cmt to 5665'. Circ. bottom up. TIH. RU Oil Well Perferator. Ran CBL - no bond above 5562', PERF from 5550' to 5554'. - 16 holes attempted to break down - unsuccessful. Final injection, 1½ BPM @ 1500 PSI, RD. TIH w/ Baker full flow retrievable pkg. and set @ 5522.04' - 118# above PERF. Pressure annulus to 1000#. Pkg. held. RU dowel. Tahwed pumps 7 lines tested to 3000# - OK thawed lines & stacked pumping 24 BBL pad, 3 BPM, 1500 PSI, 1 BPM, 1250 PSI. MW 8.5 ppg. Vis. 39 seconds. WL 36.

4-3-82 Depth @ 5500'. Broke down formation w/ wtr @ 3 BPM, 1500 PSI. Pumped 400 sxs, Class "G" cmt @ 3 BPM, 300 PSI. Flushed w/ wtr & mud. Staged in from 3 BPM to ½ BPM, 300 PSI to 1100 PDI. WOC. TOH w/ Packer. Drilled hole through pipe - packer swabbing hole filled each strand. PU btm hole assy & TIH, Tagged cmt @ 5476'. Drlg. cmt to 5490'. MW 8.5 ppg. Vis. 39 seconds. WL 36.

4-4-82 Depth @ 5665'. Drlg. cmt, wash & circ hole to 5665'. TOH, repaired tong lines. CBL 90-100% bond 5665' - 5300'. PU K-cutter. BHH, TIH to 5552'. Cut csg & circ. hole from 5552' - 5557.5'. MW 8.4 ppg. Vis. 38 seconds. WL 32.

4-5-82 Depth @ 5552'. Unplugged flow line. Cleaned shacker. Milled on csg 5557' - 5561'. Repaired mud & pump valve. Milled on csg - no torque. TOH w/ mill #1. Repaired air release & air line low clutch. POH w/ K-mill cutlines 100% worn out, Lost 1 drag pad in hole. PU K-mill #2. TIH, tagged @ 5559'. Milled from 5559' to 5562.5'. Avg. 1'/hour. MW 8.6 ppg. Vis. 38 seconds. WL 12.5.

4-6-82 Depth @ 5562'. Milled w/ K-mill #2, with recommendation from Servco 2000-5000 wt, 100 to 120 R.P.M., 500 to 800 G.P.M. - Rotary clutch heated from torque +450. No footage still @ 5562.5'. Circ. window clean. TOH. Cutters 100% worn out. Sm. burn mark on cutters. TIH w/ K-mill #3. Worked K-mill #3 @ 5566.5, 2000 wt, 65 R.P.M., 1700 PSI on pump #2 motor down from heat changed & ran mill w/ 1000 to 8000 wt., 1200 PSI. Pump 45/65 R.P.M.- no progress. Requested Servco operator change. TOH w/ mill - 25% worn out. TIH w/ Mill #4. MW 8.3 ppg. Vis. 42 seconds. WL 31.

4-7-82 Depth @ 5665'. Milled w/ K-mill #4. RIH. Checked BOP's. Cut on csg. Reparied #3 motor, cut on csg. Repaired #3 pump, cut on csg. TOH w/ K-mill #4 to 5566'. Repaired tongs. Changed mill & TIH w/ mill #5. Cut csg. to 5668.5'. Repaired fuel pump, lost all power. RD. Milled w/ 7000# wt. 65 R.P.M., 1250 PSI pump. MW 8.5 ppg. Vis. 52 seconds. WL 31.

4-8-82 Depth @ 5665'. RR to fuel line. Cut csg. Circ. hole. Cut csg. TOH to change K-mill. TIH, broke circ. Cutting w/ 1250 PSI, pumped 7000# wt. 82 R.P.M. Shortened blade cutter from 17½" to 15". MW 8.6 ppg. Vis. 66 seconds. WL 19.2.

4-9-82 Depth @ 5665'. Cut csg. from 5577' to 5579'. Circ hole. & cleaned hole of cuttings. Cut csg. from 5579' - 5582.5'. Circ & cleaned hole of cuttings. Tripped for K-mill #7. Cut csg. from 5582.5' to 5588'. Circ. hole clean of cuttings. Cut on csg. w/ 1250 PSI pump. 700 GPM, 5000 - 8000 wt. 8 RPM. MW 8.5 ppg. Vis. 61 seconds. WL 17.

4-10-82 Depth @ 5665'. Cut window from 5588' - 5589'. Connection, circ BTM up. Cut window 5589' - 5589.5'. Circ btm up. Worked K-cutters to retract & TOH. LD K-cutter & PU Tri-State K-cutter #8. TIH w/ Tri-State K-cutter #8. Broke circ. Reamed formation 5590' to 5592'. Cut window 5592' - 5605.4'. MW 8.5 ppg. Vis. 102.seconds. WL 18.4.

4-11-82 Depth @ 5665'. Milled window from 5605.4' - 5619.4'. Circ sweeps to clean the hole. Worked cutter blades in - TOH w/ cutter #8. LD-K-cutter. TIH w/ 60 std. & Halliburton plug catcher @ 5663.5'. RU circ. head. Circ & cond. mud. RU Halliburton, test to 3000 PSI. Cmt. w/ 250 sxs, Class "G". Bumped plug w/ 1500 PSI - plug held. TOH w/ 5 sheared Halliburton plug. Catcher @ 2500 PSI. TOH w/ 5 std. TOH LD-plug catcher. WOC. MW 8.6 ppg. Vis. 68 seconds. WL 19.2.

4-12-82 Depth @ 5511'. WOC. TIH w/ bit. Tagged cmt 5451.03'. Displaced hole w/ wtr., Circ sweeps. Drlg. 5451- to 5480'. Circ. sweeps. Drlg. 5451' to 5480'. Circ. sweeps. Drlg. from 5480' - 511'', 20#, 50 RPM. MW 8.4 ppg. Vis. wtr.

4-13-82 Depth @ 5663'. Repaired break out tong lines. Drlg. cmt from 5511' to 5560'. Circ. sweeps, cleaned & cond. mud. Cleaned mud tank. Displaced wtr. in hole w/ new mud. Made up new BHA for side fracturing. TIH w/ Dyna Drill #1. RU Stearing tool equip. TIH w/ wire line. Tagged salt fill @ 5557.5', washed. Tagged hard cmt @ 5564.5'. Started side tracking going out low side. MW 8.4 ppg. Vis. 42 seconds. WL 19.8.

4-14-82 Depth @ 5626'. Survey tool 34' of Btm. Side tracking first connection. 14000# drag. Circ. to TOH, to run reamer - to open hole up. MW 8.6 ppg. Vis. 42 seconds. WL 15.2.

4-15-82 Drlg. to 5670'. Made 44'. Frontier. Circ. TOH w/ wire line. RD stearing tool. TOH w/ Dyna Drill. Made up new BHA. TIH w/ bit #20. Reamed side track from 5552' to 5626'. Drlg. new hole. Circ - dropped survey, adjusted depth on survey Dev. 3¼° @ 5617'. SO 33 W. Drlg. 8-3/4" hole to 5670'. 50% sand, 50% shale, some cmt. MW 8.6 ppg. Vis. 42 seconds. WL 16.8.

4-30-82 Drlg. to 7182'. Made 129'. Kelvin. Dev. 4° So.-18-W @ 7019'. MW 8.8 ppg. Vis 46 seconds. WL 8.4.

5-1-82 Drlg. to 7363'. Made 181'. Kelvin. Dev. 3½°, so-17-W @ 7180'. MW 8.8 ppg. Vis. 44 seconds. WL 8.6.

5-2-82 Drlg. to 7453'. Made 131'. Kelvin. Circ., pumped pill. Dev. 3½° so-7-W @ 7303'. TOH, changed. BAD. TIH, PU 6 jts. wt. pipe. Washed & reamed - no fill. Btm 5 stds are snug. MW 8.8 ppg. Vis. 44 seconds. WL 8.7.

5-3-82 Drlg. to 7631'. Made 178'. Kelvin. Dev. 3-3/4° So-10-W @ 7432'. MW 8.8 ppg. Visl 43 seconds. WL 8.3.

5-4-82 Drlg. to 7684'. Made 53'. Kelvin. Dev. 3½° so-8-W @ 7589'. Repaired shifting on compound. MW 8.7 ppg. Vis. 41 seconds. WL 8.9.

5-5-82 Drlg. to 7810'. Made 126'. Kelvin. Dev. 3½° So-8-W @ 7647'. MW 8.9 ppg. Vis. 41 seconds. WL 8.5.

5-6-82 Drlg. to 7949'. Made 139'. Kelvin. Dev. 3½° So-2½-W @ 7806'. MW 8.7 ppg. Vis. 43 seconds. WL 8.7.

5-7-82 Drlg. to 8011'. Made 62'. Kelvin. Dev. 3¼° @ So 1 E @ 7961'. TOH. Inspected BHA. LD 1-9 DC's. 1-IBS & 3pt. Cleaned test choke manifold Worked BOP to 3000#. Ran wear ring. TIH w/ BHA. MW 8.7 ppg. Vis. 41 seconds. WL 8.1.

5-8-82 Drlg. to 8158'. Made 147'. Kelvin. TIH w/ BHA. TIH. LD 3jts DP. Stuck circ @ 7200'-freed. TIH. Stuck @ 7880' - freed. Washed 120' to TD. MW 8.8 ppg. Vis. 44 seconds. WL 8.1.

5-9-82 Drlg. to 8344'. Made 186'. Kelvin. Dev. 3° @ 8154'-missrun. Worked tight spot @ 8295'. Short trip 8310'-7739'. Reamed to btm. MW 8.7 ppg. Vis. 54 seconds. WL 9.1.

5-10-82 Drlg. to 8541'. Made 197'. Dev. 2-3/4° @ 8373'. Short trip-5 std. Reamed to btm. MW 8.8 ppg. Vis. 45 seconds. WL 9.

5-11-82 Drlg. to 8648'. Made 107'. Kelvin. Dev. 2¼° @ 8562'. TOH. TIH. Washed & reamed 120' to btm. MW 8.8 ppg. Vis. 42 seconds. WL 8.0.

5-12-82 Drlg. to 8900'. Made 252. Kelvin. Reamed & worked tight hole. Short trip 5 stds & worked tight hole. MW 8.8 ppg. Vis. 41 sec. WL 8.3.

5-13-82 Drlg. to 9112'. Made 212'. Kelvin. Short trip - 5 stds. Dev. 2° @ 8912' S-25E, 280.3 South 32.38 Eash. MW 8.8 ppg. Vis. 43 seconds. WL 8.2.

5-14-82 Drlg. to 9258'. Made 146'. Kelvin. Tripped for bit #31. MW 8.8 ppg. Vis. 47 seconds. WL 8.3.

5-15-82 Drlg. to 9324'. Made 68'. Kelvin. Short trip-high torque-light spot @ 8022'. Broke circ. RIH to 8008'. Washed and reamed to 8377'. RIH 3 stds. Washed and reamed to 8666'. MW 8.9 ppg. Vis. 48 seconds. WL 9.8.

** FILE NOTATIONS **

DATE: Sept. 30, 1981

OPERATOR: Davis Oil Co.

WELL NO: Logan Federal #1

Location: Sec. 26 T. 3N R. 7E County: Summit

File Prepared: ✓ Entered on N.I.D: ✓

Card Indexed: ✓ Completion Sheet: ✓

API Number 43-043-30186

CHECKED BY:

Petroleum Engineer:
Per Call 10-2-81 Hanson will apply for Unorthodox location

Director: OK as per rule C-3(c)

Administrative Aide: as Per Rule C-3(c) needs topo on the move location, ok on any other oil or gas well.

APPROVAL LETTER:

Bond Required: ☐ Survey Plat Required: ☐

Order No. _____ O.K. Rule C-3 ☐

Rule C-3(c), Topographic Exception - company owns or controls acreage within a 660' radius of proposed site ☐

Lease Designation Fed. Plotted on Map ☐

Approval Letter Written ☐

Hot Line ✓ P.I. ✓

IN REPLY REFER TO

# United States Department of the Interior

BUREAU OF LAND MANAGEMENT
Salt Lake District Office
2370 South 2300 West
Salt Lake City, Utah 84119

September 30, 1981

U.S. Geological Survey
Oil and Gas Section
Attn: Mr. George Diwachak
2000 Administration Bldg.
1745 West 1700 South
Salt Lake City, Utah 84104-3884

Dear George:

Enclosed is a staff report and revised operating plan for Davis Oil Company's Logan Federal No. 1 well site located in T.3N, R.7E, Section 26, Summit County, Utah.

I concur with approval of the application for permit to drill and the surface development and operating plan as amended.

Sincerely,

for Jack C. Peterson
Bear River Resource Area Manager

Enclosure

STAFF REPORT

On Monday, September 14, 1981, an onsite inspection was made of a proposed drilling location for Davis Oil Company's Logan Federal No. 1 well site, located in T.3N, R.7E, Sec. 26, Summit County, Utah.

Those present for the onsite inspection were George Diwachak, U.S.G.S.; Garry L. Roggow, Davis Oil Company; Russell D. Geary, Geary Construction; Joseph W. Mantos, C.S. and Jim Walters, Johnson-Fermelia, Crank Inc.; Gary L. Moore, Science Applications, Inc.; and Dan Washington and Robert Snyder, BLM.

The proposed well location is situated about 18 miles east of Coalville, Utah and about 29 miles southwest of Evanston, Wyoming in the upper part of the Chalk Creek drainage. Topography consists mainly of rolling steep sloped hills, and valleys and the western end of the Uinta Mountain Range's north slope with a pad elevation of 7497 feet above mean sea level. A variety of wildlife frequent the area including mule deer, elk, moose, beaver, coyote, fox, bobcat, grouse, ground squirrels, rabbits and raptors. Sheep and cattle graze the area during the summer and fall. The biome would be a mountain brush-wheatgrass-forb type on a shallow silty clay soil type. Annual precipitation ranges from 16-20 inches with most of the moisture coming in the winter months as snow. There are no records which indicate any threatened or endangered plant or animal species in the area and the field investigation made in the area located none in the area. The archaeological clearance conducted by Science Applications, Inc. located no important or significant cultural values in the area.

Water for drilling and culinary purposes will come from a water well to be drilled onsite. Access will be via existing State, County, and private roads except for about 2640 feet of new road constructed from the existing private road to the site.

## - REVISED OPERATING PLAN -

Davis Oil Company's Logan Federal #1

1. No change

2. No change

3. No change

4. No change

5. No change

6. No change

7. At least one half of the depth of the reserve pit will be below the existing ground level, and those portions of the pit with fill dike will be keywayed.

   Sewage will be disposed according to local and state regulation.

   Any burning occurring on the site will be done with prior approval with the State Fire Marshal.

8. No change

9. No change

10. The first 12 inches of soil covering the well location will be stockpiled for use in reclamation. Backfilling and recontouring will be completed as prescribed by the surface landowner. In addition to the seed mixture prescribed by the surface landowner we recommend if agreeable with the landowner that containerized stock of bitterbrush and serviceberry be planted at a rate of about 200 stems per acre.

11. No change

12. No change

13. No change

14. The BLM representative for surface disturbance reclamation is Dan Washington, Salt Lake District Office, (801-524-5348). He should be contacted prior to the beginning of dirt work.

Form 9-331 C
(May 1963)

SUBMIT IN TRIPLICATE*
(Other instructions on reverse side)

Form approved.
Budget Bureau No. 42-R1425.

UNITED STATES
DEPARTMENT OF THE INTERIOR
GEOLOGICAL SURVEY

# APPLICATION FOR PERMIT TO DRILL, DEEPEN, OR PLUG BACK

5. LEASE DESIGNATION AND SERIAL NO.: U W-47812

6. IF INDIAN, ALLOTTEE OR TRIBE NAME: ——

7. UNIT AGREEMENT NAME: ——

8. FARM OR LEASE NAME: Logan Federal

9. WELL NO.: #1

10. FIELD AND POOL, OR WILDCAT: Wildcat

11. SEC., T., R., M., OR BLK. AND SURVEY OR AREA: Sec. 26, T3N, R7E

1a. TYPE OF WORK: DRILL [XX] DEEPEN [ ] PLUG BACK [ ]

b. TYPE OF WELL: OIL WELL [XXX] GAS WELL [ ] OTHER — SINGLE ZONE [XX] MULTIPLE ZONE [ ]

2. NAME OF OPERATOR: DAVIS OIL COMPANY

3. ADDRESS OF OPERATOR: 410 17th Street, Suite 1400, Denver, Colorado 80202

4. LOCATION OF WELL (Report location clearly and in accordance with any State requirements.)
At surface: SE NE Sec. 26, T3N, R7E
At proposed prod. zone: 1659' FNL & 689' FEL
~~1980' FNL, 660' FEL~~

RECEIVED
OCT 02 1981
DIVISION OF
OIL, GAS & MINING

12. COUNTY OR PARISH: Summit
13. STATE: Utah

14. DISTANCE IN MILES AND DIRECTION FROM NEAREST TOWN OR POST OFFICE*: 16 miles east of Coalville, Utah

15. DISTANCE FROM PROPOSED* LOCATION TO NEAREST PROPERTY OR LEASE LINE, FT. (Also to nearest drlg. unit line, if any): 660' FEL

16. NO. OF ACRES IN LEASE:

17. NO. OF ACRES ASSIGNED TO THIS WELL:

18. DISTANCE FROM PROPOSED LOCATION* TO NEAREST WELL, DRILLING, COMPLETED, OR APPLIED FOR, ON THIS LEASE, FT.: NONE

19. PROPOSED DEPTH: 15,000'

20. ROTARY OR CABLE TOOLS: Rotary

21. ELEVATIONS (Show whether DF, RT, GR, etc.): 7497' GR Est., 7507' KB Est.

22. APPROX. DATE WORK WILL START*: Upon approval

23. PROPOSED CASING AND CEMENTING PROGRAM

| SIZE OF HOLE | SIZE OF CASING | WEIGHT PER FOOT | SETTING DEPTH | QUANTITY OF CEMENT |
|---|---|---|---|---|
| 17 1/2" | 13 3/8" | 54.5# K-55 | STC (NEW) | ~~0-1500' 1300 sxs. est.~~ |
| 12 1/4" | 9 5/8" | 53.5# N-80 | ~~LTC (NEW)~~ | ~~0-160'~~ |
| 12 1/4" | 9 5/8" | 40# N-80 | LTC (NEW) | 160-4700' |
| 12 1/4" | 9 5/8" | 47# N-80 | LTC (NEW) | 4700-6800' |
| 12 1/4" | 9 5/8" | 53.5# N-80 | LTC (NEW) | 6800-8500' |
| 8 1/2" | 7" | 38# P-110 | LTC (NEW) | 0-80' |
| 8 1/2" | 7" | 26# P-110 | LTC (NEW) | 80-2160' |
| 8 1/2" | 7" | 29# N-80 | LTC (NEW) | 2160-3920' |
| 8 1/2" | 7" | 26# N-80 | LTC (NEW) | 3920-5200' |
| 8 1/2" | 7" | 29# N-80 | LTC (NEW) | 5200-9200' |
| 8 1/2" | 7" | 32# N-80 | LTC (NEW) | 9200-10,480' |
| 8 1/2" | 7" | 38# P-110 | LTC (NEW) | 10,480-11,040' |
| 8 1/2" | 7" | 32# N-80 | LTC (NEW) | 11,040-13,360' |
| 8 1/2" | 7" | 35# N-80 | LTC (NEW) | 13,360-15,000' 1500 sxs.est. |

IN ABOVE SPACE DESCRIBE PROPOSED PROGRAM: If proposal is to deepen or plug back, give data on present productive zone and proposed new productive zone. If proposal is to drill or deepen directionally, give pertinent data on subsurface locations and measured and true vertical depths. Give blowout preventer program, if any.

24. SIGNED: Ed Lafaye — TITLE: Chief Geologist — DATE: 7/10/81
Ed Lafaye

(This space for Federal or State office use)

PERMIT NO. ——

APPROVAL DATE ——

APPROVED BY: W P Martin — FOR E. W. GUYNN — TITLE: DISTRICT OIL & GAS SUPERVISOR — DATE: OCT 01 1981

CONDITIONS OF APPROVAL, IF ANY:

NOTICE OF APPROVAL

CONDITIONS OF APPROVAL ATTACHED TO OPERATOR'S COPY

FLARING OR VENTING OF GAS IS SUBJECT TO NTL 4-A DATED 1/1/80

State O & G

Identification No. 610-81

United States Department of the Interior
Geological Survey
2000 Administration Building
1745 West 1700 South
Salt Lake City, Utah 84104

NEPA CATEGORICAL EXCLUSION REVIEW

PROJECT IDENTIFICATION

Operator DAVIS OIL COMPANY / LOGAN FEDERAL #1

Project Type Oil WELL

Project Location 1659' FNL, 689' FEL SEC 26, T3N, R7E

Well No. 1 Lease No. U-47812

Date Project Submitted 9/8/81

FIELD INSPECTION Date 9/14/81

Field Inspection Participants

| | |
|---|---|
| GEORGE DIWACHAK | USGS |
| DAN WASHINGTON, ROBERT SNYDER | BLM |
| GARY ROGOW | DAVIS |
| GARY MOORE | SCIENCE APPLICATIONS, INC. |
| RUSSELL GEARY | GEARY CONST |
| JOSEPH MANATOS | JOHNSON-FERMELIA AND CRANK, INC |
| JIM WALTERS | " " " " " |

I have reviewed the proposal in accordance with the categorical exclusion review guidelines. This proposal would not involve any significant effects and, therefore, does not represent an exception to the categorical exclusions.

OCT 1 1981
Date Prepared

George J Diwachak
Environmental Scientist

I concur

OCT 01 1981
Date

W P Martens
FOR E. W. GUYNN
DISTRICT OIL & GAS SUPERVISOR
District Supervisor

CATEGORICAL EXCLUSION REVIEW INFORMATION SOURCE

| Criteria 516 DM 2.3.A | Federal/State Agency: Correspondence (date) | Federal/State Agency: Phone check (date) | Federal/State Agency: Meeting (date) | Local and private correspondence (date) | Previous NEPA | Other studies and reports | Staff expertise | Onsite inspection (date) | Other |
|---|---|---|---|---|---|---|---|---|---|
| 1. Public health and safety | 1 (9-30-81) ↓ | 9 (10-1-81) | | | | | 6 | 6 (9-14-81) ↓ | 4,8 |
| 2. Unique characteristics | 1 | | | | | | 6 | 6 | 4,8 |
| 3. Environmentally controversial | 1 | | | | | | 6 | 6 | 4,8 |
| 4. Uncertain and unknown risks | 1 | 9 (10-1-81) | | | | | 6 | 6 | 4,8 |
| 5. Establishes precedents | 1 | | | | | | 6 | 6 | 4 |
| 6. Cumulatively significant | | | | | | | 6 | | 4 |
| 7. National Register historic places | 1 | | | | | | 6 | 6 | |
| 8. Endangered/ threatened species | 1 | | | | | | 6 | | |
| 9. Violate Federal, State, local, tribal law | 1 | | | | | | 6 | 6 | 4,8 |

CATEGORICAL EXCLUSION REVIEW COMMON REFERENCE LEGEND

1. Surface Management Agency Input

2. Reviews Reports, or information received from Geological Survey (Conservation Division, Geological Division, Water Resource Division, Topographic Division)

3. Lease Stipulations/Terms

4. Application for Permit to Drill

5. Operator Correspondence

6. Field Observation

7. Private Rehabilitation Agreement

8. RECOMMENDED STIPULATIONS

9. TELECON TO M. MINDER, UTAH STATE OIL AND GAS. (SEE BACK OF FIELD NOTES FOR DETAILS)

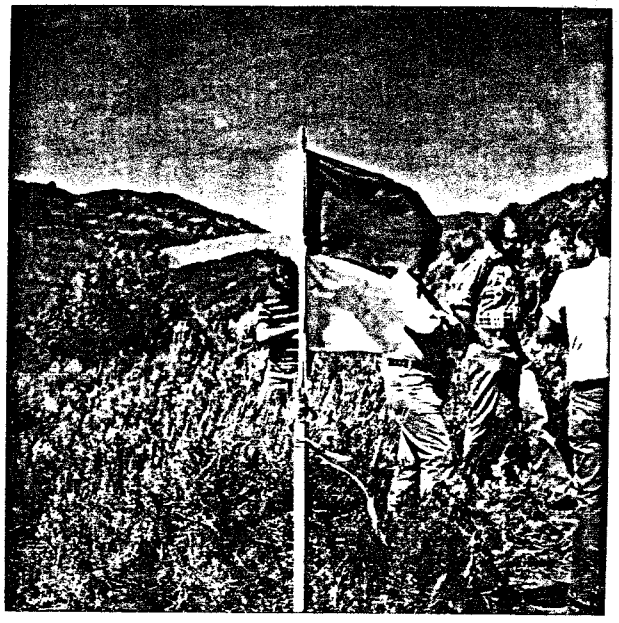

DAVIS #1 ↑ NE

DAVIS #1 FROM CENTER STAKE ↑ NE

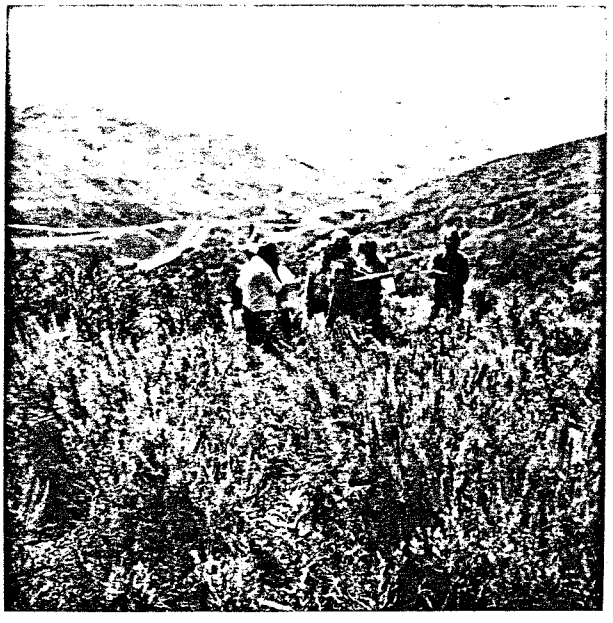

DAVIS #1 SW.

DAVIS #1 ↑ SE

# RECOMMENDED STIPULATIONS

1. THE LOCATION WILL BE ROTATED 180° TO POSITION THE RESERVE PIT PRIMARILY IN CUT MATERIAL

2. AT LEAST ONE HALF OF THE DEPTH OF THE RESERVE PIT WILL BE BELOW THE EXISTING GROUND LEVEL, AND THOSE PORTIONS OF THE PIT WITH A FILL DIKE WILL BE KEYWAYED, WITH DIKES COMPACTED IN LIFTS

3. SEWAGE WILL BE DISPOSED ACCORDING TO LOCAL AND STATE REGULATIONS

4. ANY BURNING ON SITE MUST HAVE APPROVAL OF THE STATE FIRE MARSHAL

5. THE TOP 12 INCHES OF SOIL COVERING THE WELL LOCATION WILL BE STOCKPILED FOR USE IN RECLAMATION. BACKFILLING AND RECONTOURING WILL BE COMPLETED AS PRESCRIBED BY THE SURFACE LANDOWNER. IF THE LANDOWNER IS AGREEABLE, CONTAINERIZED STOCK OF BITTERBRUSH AND SERVICEBERRY, PLANTED AT A RATE OF ABOUT 200 STEMS/ACRE, SHOULD BE INCLUDED TO THE SEED MIXTURE PRESCRIBED IN THE PRIVATE SURFACE AGREEMENT.

6. THE BLM REPRESENTATIVE FOR SURFACE DISTURBANCE RECLAMATION IS DAN WASHINGTON, SALT LAKE DISTRICT OFFICE, (801-524-5348). HE SHOULD BE CONTACTED PRIOR TO THE BEGINNING OF DIRT WORK.

**DAVIS OIL COMPANY**

0 – 17TH STREET, SUITE 1400
DENVER, COLORADO 80202
TELEPHONE: 303-623-1000

NEW ORLEANS
HOUSTON
TULSA

OCT 1 3 1981
DIVISION OF
OIL, GAS & MINING

October 9, 1981

Mr. Michael T. Minder
State of Utah
Division of Oil and Gas and Mining
1588 West North Temple
Salt Lake City, Utah 84116

Re: #1 Logan Federal
SE/4 NE/4 of Section 26-
T3N-R7E
Summit County, Utah

Gentlemen:

Regarding the subject test well for which Davis Oil Company has applied for a drilling permit, please be advised that due to topographic difficulties, Davis Oil proposes that the location for the well be 680' FEL x 1659' FNL in Section 26-T3N-R7E. Davis Oil owns all the working interest within 660' from our proposed location.

We respectively request you approve our "unorthodox location" based upon the above.

Very truly yours,

DAVIS OIL COMPANY

Lynn S. Belcher
Landman

LSB:cab

Form 9-331
Dec. 1973

Form Approved.
Budget Bureau No. 42-R1424

UNITED STATES
DEPARTMENT OF THE INTERIOR
GEOLOGICAL SURVEY

# SUNDRY NOTICES AND REPORTS ON WELLS

(Do not use this form for proposals to drill or to deepen or plug back to a different reservoir. Use Form 9-331-C for such proposals.)

1. oil well ☐ gas well ☐ other

2. NAME OF OPERATOR
DAVIS OIL COMPANY

3. ADDRESS OF OPERATOR
BOX 534 MILLS, WYOMING 82644

4. LOCATION OF WELL (REPORT LOCATION CLEARLY. See space 17 below.)
AT SURFACE: SENE Section 26-T3N-R7E
AT TOP PROD. INTERVAL:
AT TOTAL DEPTH:

5. LEASE
U-47812

6. IF INDIAN, ALLOTTEE OR TRIBE NAME

7. UNIT AGREEMENT NAME

8. FARM OR LEASE NAME
LORGAN FEDERAL

9. WELL NO.
#1

10. FIELD OR WILDCAT NAME

11. SEC., T., R., M., OR BLK. AND SURVEY OR AREA
Sec. 26-T3N-R7E

12. COUNTY OR PARISH
SUMMIT

13. STATE
UTAH

14. API NO.

15. ELEVATIONS (SHOW DF, KDB, AND WD)

16. CHECK APPROPRIATE BOX TO INDICATE NATURE OF NOTICE, REPORT, OR OTHER DATA

| REQUEST FOR APPROVAL TO: | | SUBSEQUENT REPORT OF: |
|---|---|---|
| TEST WATER SHUT-OFF | ☐ | ☐ |
| FRACTURE TREAT | ☐ | ☐ |
| SHOOT OR ACIDIZE | ☐ | ☐ |
| REPAIR WELL | ☐ | ☐ |
| PULL OR ALTER CASING | ☐ | ☐ |
| MULTIPLE COMPLETE | ☐ | ☐ |
| CHANGE ZONES | ☐ | ☐ |
| ABANDON* | ☐ | ☐ |
| (other) Change of location | | |

(NOTE: Report results of multiple completion or zone change on Form 9-330.)

17. DESCRIBE PROPOSED OR COMPLETED OPERATIONS (Clearly state all pertinent details, and give pertinent dates, including estimated date of starting any proposed work. If well is directionally drilled, give subsurface locations and measured and true vertical depths for all markers and zones pertinent to this work.)*

Please be advised of changed location from 689' FEL to 680' FEL per phone conversation with Mr. Martin on October 9, 1981. This move is made to conform with State of Utah Oil & Gas Commission request for unorthodox location.

RECEIVED
OCT 19 1981
DIVISION OF
OIL, GAS & MINING

Subsurface Safety Valve: Manu. and Type _____ Set @ _____ Ft.

18. I hereby certify that the foregoing is true and correct

SIGNED [signature] TITLE Field Rep. DATE 10-9-81

(This space for Federal or State office use)

APPROVED BY _____ TITLE _____ DATE _____
CONDITIONS OF APPROVAL, IF ANY:

*See Instructions on Reverse Side

October 28, 1981

Davis Oil Company
410 17th Street
Suite #1400
Denver, Colo. 80202

RE: Well No. Logan Federal #1,
Sec. 26, T. 3N, R. 7E,
Summit County, Utah

Insofar as this office is concerned, approval to drill the above referred to oil well on said unorthodox location is hereby granted in accordance with Rule C-3(c), General Rules and Regulations and Rules of Practice and Procedure.

Should you determine that it will be necessary to plug and abandon this well, you are hereby requested to immediately notify the following:

MICHAEL T. MINDER - Petroleum Engineer
Office: 533-5771
Home: 876-3001

Enclosed please find Form OGC-8-X, which is to be completed whether or not water sands (acquifers) are encountered during drilling. Your cooperation in completing this form will be appreciated.

Further, it is requested that this Division be notified within 24 hours after drilling operations commence, and that the drilling contractor and rig number be identified.

The API number assigned to this well is 43-043-30186.

Sincerely

DIVISION OF OIL, GAS AND MINING

Cleon B. Feight
Director

CBF/db
CC: USGS

DIVISION OF OIL, GAS AND MINING

## SPUDDING INFORMATION

NAME OF COMPANY: Davis Oil

WELL NAME: Logan Federal #1

SECTION SENE 26 TOWNSHIP 3N RANGE 7E COUNTY Summit

DRILLING CONTRACTOR Manning

RIG # 14

SPUDDED: DATE 12-20-81

TIME 8:30 PM

HOW Rotary

DRILLING WILL COMMENCE

REPORTED BY Dale Purintoo

TELEPHONE # 307-266-2165

DATE 12-21-81 SIGNED DB

NOTICE OF SPUD

Company: Davis Oil

Caller: Dale Parrington

Phone:

Well Number: #1 Logan Fed.

Location: Sec. 26 - 3N - 7E

County: Summit State: Utah

Lease Number: U-47812

Lease Expiration Date:

Unit Name (If Applicable): N/A

Date & Time Spudded: 12-20-81 - 8:30 A.m.

Dry Hole Spudder/Rotary: Rotary

Details of Spud (Hole, Casing, Cement, etc.)

17½" hole - to 26" 20" surface casing

Rotary Rig Name & Number: Manning #14

Approximate Date Rotary Moves In: 12-8-81

FOLLOW WITH SUNDRY NOTICE

Call Received By: Diane

Date: Dec. 21, 1981

RECEIVED
DEC 23 1981
DIVISION OF
OIL, GAS & MINING

BEFORE THE BOARD OF OIL, GAS AND MINING
DEPARTMENT OF NATURAL RESOURCES
STATE OF UTAH

| | | |
|---|---|---|
| IN THE APPLICATION OF DAVIS OIL COMPANY FOR AN ORDER ESTABLISHING 80-ACRE DRILLING AND SPACING UNITS FOR THE NORTH PINEVIEW FIELD OF SUMMIT COUNTY, UTAH | ) | AMENDED FINDINGS OF FACT, CONCLUSIONS OF LAW AND ORDER<br><br>Cause No. 203-1 |

This matter was heard before the Utah Board of Oil, Gas and Mining at 8:30 a.m. on Friday, October 29, 1982, in Room 303 of the State Capitol Building at Salt Lake City, Utah. The following Board members (constituting a quorum of the Board) were present and in accordance with law participated in the hearing and the decision resulting in this Order:

Herm Olsen, Presiding
Robert R. Norman
John L. Bell
E. Steele McIntyre
Edward T. Beck

Also present and participating on behalf of the Division of Oil, Gas and Mining were:

Cleon B. Feight, Director of the Division
Ron J. Firth, Chief Petroleum Engineer
Carolyn Driscoll, Attorney

Present and participating on behalf of the Minerals Management Service (formerly U.S. Geological Survey) was Ed W. Guynn, District Petroleum Engineer.

Appearances were made as follows:

For Davis Oil Company:

Robert G. Pruitt, Jr., Esq.
Pruitt, Gushee & Fletcher
Salt Lake City, Utah

and

William F. Drew, Esq.
Brown, Drew, Apostolos,
Massey & Sullivan
Casper, Wyoming

For Amoco Production Co.:

Gary L. Paulsen, Esq.
Amoco Production Company
Denver, Colorado



203-1

For American Quasar Petroleum Company of New Mexico: Frank Douglass, Esq.
Scott, Douglass & Keaton
Austin, Texas

For The Anschutz Corporation: Ted P. Stockmar, Esq.
Holme, Roberts & Owen
Denver, Colorado

NOW, THEREFORE, having considered the testimony presented, the evidence and exhibits introduced and the statements made by all parties participating in the hearing, and being fully advised in the premises, the Board now makes and enters the following:

FINDINGS OF FACT AND CONCLUSIONS OF LAW

1. Due and regular notice of the time, place and purpose of the hearing in Cause No. 203-1 was given to all interested parties as required by law and the rules and regulation of the Board.

2. The Board has jurisdiction over the matters covered by Cause No. 203-1 and over the parties therein, and the Board has jurisdiction to make and promulgate the Order herein-after set forth.

3. The application of Davis Oil Company in Cause No. 203-1 complies in all respects with the rules and regulations of the Board.

4. It is necessary, in order to prevent waste and to protect correlative rights, that drilling and spacing units for the production of oil, gas and related hydrocarbons from the Nugget formation shall be established for the following described lands in Summit County, Utah:

Township 3 North, Range 7 East, SLM

Section 25: W 1/2
Section 26: All
Section 35: N 1/2
Section 36: NW 1/4

5. The Nugget formation beneath the above described lands constitutes a "pool" and one well producing oil, gas and associated hydrocarbons from the Nugget formation underlying the above described lands will efficiently and economically drain the recoverable oil, gas

and associated hydrocarbons underlying 80 surface acres, and 80 surface acres is not smaller, nor greater, than the maximum area that can be efficiently and economically drained by one well.

6. The discovery well for the North Pineview Field is designated as the Logan Federal No. 1 well drilled by Davis Oil Company in the SE 1/4 NE 1/4 of Section 26, and the initial drilling unit for said discovery well should be the E 1/2 NE 1/4 of said Section 26.

7. Permitted wells within the spaced area should be drilled and completed in the Nugget formation on an orderly pattern, approximately equidistant from each other, so that the completion zone in the Nugget formation for the permitted well locations shall be in the NW 1/4 and the SE 1/4 of each quarter section, nor more than 200 feet from the center of the quarter-quarter section.

8. The designated drilling and spacing unit for each permitted well should be the E 1/2 and the W 1/2 of each quarter section in order to conform to the initial drilling unit for the discovery well. However, upon the application of the operator of a new well, the drilling and spacing unit for such well may be established as either the S 1/2 or the N 1/2 of such quarter section by the operator.

9. The reservoir underlying the subject lands is a retrograde system having a dew point currently measured at 4731 psi.

IN ACCORDANCE with the above Findings of Fact and Conclusions of Law, the Board hereby makes the following:

ORDER

1. Drilling and spacing units for the production of oil, gas and related hydrocarbons from the Nugget formation shall be 80 acres in size for the following described lands:

Township 3 North, Range 7 East, SLM
Section 25: W 1/2
Section 26: All
Section 35: N 1/2
Section 36: NW 1/4

2. The completion zone in the Nugget formation of the permitted wells within the spaced area shall be in the NW 1/4 and the SE 1/4 of each quarter section, with the completion zone for the permitted well no more than 200 feet from the center of the quarter-quarter section.

3. The drilling and spacing unit for the Logan Federal No. 1 well shall be the E 1/2 NE 1/4 of Section 26 and other drilling and spacing units for the subject lands shall be comprised of the E 1/2 and the W 1/2 of each surveyed quarter section or the operator of a new well may designate the S 1/2 or the N 1/2 of a quarter section as the drilling and spacing unit for such well.

4. The operator of each well shall be required to take a bottom hole pressure test for each well every thirty (30) days and promptly report the results to the Division of Oil, Gas and Mining until further Order of this Board.

5. Until a pressure maintenance system is approved by this Board and placed in operation for any well, production of gas and condensate from each such well within the spaced area may not exceed 350 barrels of condensate per day and 4 million cubic feet of gas per day, as long as the reservoir pressure is 150 psi or more above the retrograde dew point. If any bottom hole pressure test referred to above shows that the reservoir pressure is less than 150 psi above the retrograde dew point, all production from such well shall forthwith cease and said well shall be shut-in until the pressure in the well separately measured can be maintained

at least 150 psi above the dew point, or until further Order of this Board.

6. The operator of the Logan Federal No. 1 discovery well is ordered to obtain a further sample of the reservoir fluid and have the same tested to measure and confirm the actual dew point PRESSURE of the retrograde reservoir.

7. The Board retains continuing jurisdiction over all matters covered by this Order and over all parties affected thereby, for the purpose of making further Orders as it may deem appropriate and as may be authorized by statute and applicable regulations.

Entered this 29th day of October, 1982.

BOARD OF OIL, GAS AND MINING

Herm Olsen

Herm Olsen

Robert R. Norman

Robert R. Norman

John L. Bell

John L. Bell

E. Steele McIntyre

E. Steele McIntyre

Edward T. Beck

Edward T. Beck

Form DOGC-4

# STATE OF UTAH

DEPARTMENT OF NATURAL RESOURCES

DIVISION OF OIL & GAS CONSERVATION

4241 STATE OFFICE BUILDING

SALT LAKE CITY, UTAH 84114

533-5771

State Lease No. .....

Federal Lease No. 71-047812

Indian Lease No. .....

Fee & Pat. .....

## REPORT OF OPERATIONS AND WELL STATUS REPORT

STATE Utah COUNTY Summit FIELD/LEASE Wildcat/Logan Federal #1

The following is a correct report of operations and production (including drilling and producing wells) for the month of: JANUARY, 19 82.

Agent's Address: 410 17th Street, Suite 1400, Denver, CO 80202

Phone No. (303) 623-1000

Company: Davis Oil Company

Signed: Pamela Leighton

Title: Production Services Manager

| Sec. and ¼ of ¼ | Twp. | Range | Well No. | Days Produced | Barrels of Oil | Gravity | Cu. Ft. of Gas (In thousands) | Gallons of Gasoline Recovered | Barrels of Water (if none, so state) | API NUMBER/REMARKS (If drilling, depth; if shut down, cause; date and result of test for gasoline content of gas) |
|---|---|---|---|---|---|---|---|---|---|---|
| SE NE 26 | 3N | 7E | 1 | -0- | -0- | -0- | -0- | -0- | -0- | API-30186<br>12-20-81 SPUDDED WELL. 12-27-81 DRLG. TO 894' SHALE. 1-3-82 RAN 25 JTS. 26#, K-55, 9 5/8" CSG. SET AT 1008' KB. CMTD. WITH 1766 SXS. 1-9-82 DRLG. TO 1275'. CHALK CREEK. 1-15-82 DRLG. TO 2342'. CHALK CREEK. 1-20-82 DRLG. TO 3216'. CHALK CREEK. |

GAS: (MCF)

Sold: NONE

Flared/Vented: ↓

Used On/Off Lease: ↓

OIL or CONDENSATE: (To be reported in Barrels)

On hand at beginning of month: NONE

Produced during month: ↓

Sold during month: ↓

Unavoidably lost: ↓

Reason: ↓

On hand at end of month: ↓

DRILLING/PRODUCING WELLS: This report must be filed on or before the sixteenth day of the succeeding month following production for each well. Where a well is temporarily shut-in, a negative report must be filed. *THIS REPORT MUST BE FILED IN DUPLICATE.*

Note: The API number must be listed on each well.

Form DOGC-4

# STATE OF UTAH

DEPARTMENT OF NATURAL RESOURCES

DIVISION OF OIL & GAS CONSERVATION

4241 STATE OFFICE BUILDING

SALT LAKE CITY, UTAH 84114

533-5771

State Lease No. .....

Federal Lease No. 71-047812

Indian Lease No. .....

Fee & Pat. .....

## REPORT OF OPERATIONS AND WELL STATUS REPORT

STATE Utah COUNTY Summit FIELD/LEASE Wildcat/Logan Federal #1

The following is a correct report of operations and production (including drilling and producing wells) for the month of: FEBRUARY, 19 82.

Agent's Address: 410 17th Street, Suite 1400, Denver, CO 80202

Phone No.: (303) 623-1000

Company: Davis Oil Company

Signed: Pamelia Leighton

Title: Production Services Manager

| Sec. and ¼ of ¼ | Twp. | Range | Well No. | Days Produced | Barrels of Oil | Gravity | Cu. Ft. of Gas (In thousands) | Gallons of Gasoline Recovered | Barrels of Water (if none, so state) | API NUMBER/REMARKS (If drilling, depth; if shut down, cause; date and result of test for gasoline content of gas) |
|---|---|---|---|---|---|---|---|---|---|---|
| SE NE 26 | 3N | 7E | 1 | -0- | -0- | -0- | -0- | -0- | -0- | API-30186<br>1-21-82 DRLG. TO 3430'. FRONTIER.<br>1-26-82 DRLG. TO 4088'.<br>1-31-82 DRLG. TO 4335'.<br>2-5-82 DRLG. TO 5168'.<br>2-10-82 DEPTH AT 5730' FRONTIER.<br>2-12-82 RAN 13 3/8" CSG. AND 138 JTS. SET AT 5730'. KB. CMTD. W/1700 SXS.<br>2-17-82 THRU 2-21-82 DEPTH AT 5730'. FRONTIER. |

GAS: (MCF)

Sold: NONE

Flared/Vented: ↓

Used On/Off Lease: ↓

OIL or CONDENSATE: (To be reported in Barrels)

On hand at beginning of month: NONE

Produced during month: ↓

Sold during month: ↓

Unavoidably lost: ↓

Reason: ↓

On hand at end of month: ↓

DRILLING/PRODUCING WELLS: This report must be filed on or before the sixteenth day of the succeeding month following production for each well. Where a well is temporarily shut-in, a negative report must be filed. *THIS REPORT MUST BE FILED IN DUPLICATE.*

Note: The API number must be listed on each well.

Form DOGC-4

# STATE OF UTAH

DEPARTMENT OF NATURAL RESOURCES
DIVISION OF OIL & GAS CONSERVATION
4241 STATE OFFICE BUILDING
SALT LAKE CITY, UTAH 84114
533-5771

State Lease No. .....
Federal Lease No. 71-047812
Indian Lease No. .....
Fee & Pat. .....

## REPORT OF OPERATIONS AND WELL STATUS REPORT

STATE Utah COUNTY Summit FIELD/LEASE Wildcat/Logan Federal #1

The following is a correct report of operations and production (including drilling and producing wells) for the month of: MARCH, 19 82.

Agent's Address 410 17th Street, Suite 1400, Denver, CO 80202
Phone No. (303) 623-1000

Company Davis Oil Company
Signed Pamella L Ughton
Title Production Services Manager

| Sec. and ¼ of ¼ | Twp. | Range | Well No. | Days Produced | Barrels of Oil | Gravity | Cu. Ft. of Gas (In thousands) | Gallons of Gasoline Recovered | Barrels of Water (if none, so state) | API NUMBER/REMARKS (If drilling, depth; if shut down, cause; date and result of test for gasoline content of gas) |
|---|---|---|---|---|---|---|---|---|---|---|
| SE NE 26 | 3N | 7E | 1 | -0- | -0- | -0- | -0- | -0- | -0- | API-30186<br>2-22-82 DEPTH AT 5730'. SPRING CREEK. MILLED, RECOVERED JUNK. 3-2-82 DEPTH AT 5730'. MILLED. 3-10-82 REAMED OVER FISH TO 5657.95. 3-15-82 JARRED ON FISH. 3-20-82 MILLED TO 5686'. |

GAS: (MCF)
Sold NONE
Flared/Vented
Used On/Off Lease

OIL or CONDENSATE: (To be reported in Barrels)
On hand at beginning of month NONE
Produced during month
Sold during month
Unavoidably lost
Reason:
On hand at end of month

DRILLING/PRODUCING WELLS: This report must be filed on or before the sixteenth day of the succeeding month following production for each well. Where a well is temporarily shut-in, a negative report must be filed. *THIS REPORT MUST BE FILED IN DUPLICATE.*

Note: The API number must be listed on each well.

Form DOGC-4

# STATE OF UTAH

DEPARTMENT OF NATURAL RESOURCES

DIVISION OF OIL & GAS CONSERVATION

4241 STATE OFFICE BUILDING

SALT LAKE CITY, UTAH 84114

533-5771

State Lease No. .....

Federal Lease No. 71-047812

Indian Lease No. .....

Fee & Pat. .....

## REPORT OF OPERATIONS AND WELL STATUS REPORT

STATE Utah COUNTY Summit FIELD/LEASE Wildcat/Logan Federal #1

The following is a correct report of operations and production (including drilling and producing wells) for the month of: APRIL, 19 82.

Agent's Address: 410 17th Street, Suite 1400, Denver, CO 80202

Phone No. (303) 623-1000

Company: Davis Oil Company

Signed: Pamella Leighton

Title: Production Services Manager

| Sec. and ¼ of ¼ | Twp. | Range | Well No. | Days Produced | Barrels of Oil | Gravity | Cu. Ft. of Gas (In thousands) | Gallons of Gasoline Recovered | Barrels of Water (if none, so state) | API NUMBER/REMARKS (If drilling, depth; if shut down, cause; date and result of test for gasoline content of gas) |
|---|---|---|---|---|---|---|---|---|---|---|
| SE NE 26 | 3N | 7E | 1 | -0- | -0- | -0- | -0- | -0- | -0- | API-30186<br>3-21-82 THRU 3-27-82 DEPTH AT 5730'. SPRING CREEK. 4-2-82 PERF. SPRING CREEK 5550-5554 16 HOLES BECAUSE OF BAD BOND. 4-9-82 DEPTH AT 5665'. 4-15-82 DRLG. TO 5670'. FRONTIER. 4-20 82 DRLG. TO 5828'. ASPEN SHALE. |

GAS: (MCF)

Sold: NONE

Flared/Vented: ↓

Used On/Off Lease: ↓

OIL or CONDENSATE: (To be reported in Barrels)

On hand at beginning of month: NONE

Produced during month: ↓

Sold during month: ↓

Unavoidably lost: ↓

Reason: ↓

On hand at end of month: ↓

DRILLING/PRODUCING WELLS: This report must be filed on or before the sixteenth day of the succeeding month following production for each well. Where a well is temporarily shut-in, a negative report must be filed. *THIS REPORT MUST BE FILED IN DUPLICATE.*

Note: The API number must be listed on each well.

Form 9-331
Dec. 1973

Form Approved.
Budget Bureau No. 42-R1424

UNITED STATES
DEPARTMENT OF THE INTERIOR
GEOLOGICAL SURVEY

# SUNDRY NOTICES AND REPORTS ON WELLS

(Do not use this form for proposals to drill or to deepen or plug back to a different reservoir. Use Form 9-331-C for such proposals.)

1. oil well [X] gas well [ ] other

2. NAME OF OPERATOR
Davis Oil Company

3. ADDRESS OF OPERATOR
410 17th St, Suite 1400, Denver, Colo. 80202

4. LOCATION OF WELL (REPORT LOCATION CLEARLY. See space 17 below.)
AT SURFACE: SENE Sec. 26, T3N, R7E
AT TOP PROD. INTERVAL:
AT TOTAL DEPTH:

5. LEASE
U-47812

6. IF INDIAN, ALLOTTEE OR TRIBE NAME

7. UNIT AGREEMENT NAME

8. FARM OR LEASE NAME
Logan Federal

9. WELL NO.
#1

10. FIELD OR WILDCAT NAME

11. SEC., T., R., M., OR BLK. AND SURVEY OR AREA
Sec. 26, T3N, R7E

12. COUNTY OR PARISH: Summit
13. STATE: Utah

14. API NO.

15. ELEVATIONS (SHOW DF, KDB, AND WD)

16. CHECK APPROPRIATE BOX TO INDICATE NATURE OF NOTICE, REPORT, OR OTHER DATA

| REQUEST FOR APPROVAL TO: | | SUBSEQUENT REPORT OF: |
|---|---|---|
| TEST WATER SHUT-OFF | [ ] | [ ] |
| FRACTURE TREAT | [ ] | [ ] |
| SHOOT OR ACIDIZE | [ ] | [ ] |
| REPAIR WELL | [ ] | [ ] |
| PULL OR ALTER CASING | [ ] | [ ] |
| MULTIPLE COMPLETE | [ ] | [ ] |
| CHANGE ZONES | [ ] | [ ] |
| ABANDON* | [ ] | [ ] |
| (other) Amend Desposing of trash by burning | | |

RECEIVED
APR 27 1982
DIVISION OF OIL, GAS & MINING

(NOTE: Report results of multiple completion or zone change on Form 9-330.)

17. DESCRIBE PROPOSED OR COMPLETED OPERATIONS (Clearly state all pertinent details, and give pertinent dates, including estimated date of starting any proposed work. If well is directionally drilled, give subsurface locations and measured and true vertical depths for all markers and zones pertinent to this work.)*

This unit has been hard to keep in operating condition.
We want to put trash in a closed container and have it hauled off.

Subsurface Safety Valve: Manu. and Type _____ Set @ _____ Ft.

18. I hereby certify that the foregoing is true and correct

SIGNED [signature] TITLE Area Drlg Foreman DATE 4/20/82

(This space for Federal or State office use)

APPROVED BY _____ TITLE _____ DATE _____
CONDITIONS OF APPROVAL, IF ANY:

*See Instructions on Reverse Side

Form 9–331
Dec. 1973

Form Approved.
Budget Bureau No. 42–R1424

UNITED STATES
DEPARTMENT OF THE INTERIOR
GEOLOGICAL SURVEY

# SUNDRY NOTICES AND REPORTS ON WELLS

(Do not use this form for proposals to drill or to deepen or plug back to a different reservoir. Use Form 9–331–C for such proposals.)

1. oil well [X] gas well [ ] other

2. NAME OF OPERATOR
Davis Oil Company

3. ADDRESS OF OPERATOR
410 17th St., Suite 1400, Denver, Col. 80202

4. LOCATION OF WELL (REPORT LOCATION CLEARLY. See space 17 below.)
AT SURFACE: SENE Sec. 26, T3N, R7E
AT TOP PROD. INTERVAL:
AT TOTAL DEPTH:

5. LEASE
U-47812

6. IF INDIAN, ALLOTTEE OR TRIBE NAME

7. UNIT AGREEMENT NAME

8. FARM OR LEASE NAME
Logan Federal

9. WELL NO.
#1

10. FIELD OR WILDCAT NAME

11. SEC., T., R., M., OR BLK. AND SURVEY OR AREA
Sec. 26, T3N, R7E

12. COUNTY OR PARISH: Summit
13. STATE: Utah

14. API NO.

15. ELEVATIONS (SHOW DF, KDB, AND WD)

16. CHECK APPROPRIATE BOX TO INDICATE NATURE OF NOTICE, REPORT, OR OTHER DATA

RECEIVED
APR 27 1982
DIVISION OF
OIL, GAS & MINING

| REQUEST FOR APPROVAL TO: | | SUBSEQUENT REPORT OF: |
|---|---|---|
| TEST WATER SHUT-OFF | [ ] | [ ] |
| FRACTURE TREAT | [ ] | [ ] |
| SHOOT OR ACIDIZE | [ ] | [ ] |
| REPAIR WELL | [ ] | [ ] |
| PULL OR ALTER CASING | [ ] | [ ] |
| MULTIPLE COMPLETE | [ ] | [ ] |
| CHANGE ZONES | [ ] | [ ] |
| ABANDON* | [ ] | [ ] |
| (other) Plug back | | X |

(NOTE: Report results of multiple completion or zone change on Form 9–330.)

17. DESCRIBE PROPOSED OR COMPLETED OPERATIONS (Clearly state all pertinent details, and give pertinent dates, including estimated date of starting any proposed work. If well is directionally drilled, give subsurface locations and measured and true vertical depths for all markers and zones pertinent to this work.)*

Well was drilled to a depth of 5730'- while reaming 12¼" hole to 17½" lost 2 cones off reamer- 13 3/8" 1st intermediate casing was run to TD 5730' & cemented. While fishing for cones lost bottom jt off 13 3/8" string after much time & money spent, hole was plugged back to 5665', at this point a window section was cut out of 13 3/8" casing from 5552' to 5619'. Set cement plug over window. Started sidetrack @ 5564' - 3½° kick. Presently drilling 5828' 3° S-37-W

Subsurface Safety Valve: Manu. and Type _____ Set @ _____ Ft.

18. I hereby certify that the foregoing is true and correct

SIGNED [signature] TITLE Area Drlg Foreman DATE 4/20/82

(This space for Federal or State office use)

APPROVED BY _____ TITLE _____ DATE _____
CONDITIONS OF APPROVAL, IF ANY:

*See Instructions on Reverse Side

Form DOGC-4

# STATE OF UTAH

DEPARTMENT OF NATURAL RESOURCES

DIVISION OF OIL & GAS CONSERVATION

4241 STATE OFFICE BUILDING

SALT LAKE CITY, UTAH 84114

533-5771

State Lease No. .....

Federal Lease No. 71-047812

Indian Lease No. .....

Fee & Pat. .....

## REPORT OF OPERATIONS AND WELL STATUS REPORT

STATE Utah COUNTY Summit FIELD/LEASE Wildcat/Logan Federal #1

The following is a correct report of operations and production (including drilling and producing wells) for the month of: MAY, 19 82.

Agent's Address 410 17th Street, Suite 1400, Denver, CO 80202

Phone No. (303) 623-1000

Company Davis Oil Company

Signed Pamella Fischer

Title Production Services Manager

| Sec. and ¼ of ¼ | Twp. | Range | Well No. | Days Produced | Barrels of Oil | Gravity | Cu. Ft. of Gas (In thousands) | Gallons of Gasoline Recovered | Barrels of Water (if none, so state) | API NUMBER/REMARKS (If drilling, depth; if shut down, cause; date and result of test for gasoline content of gas) |
|---|---|---|---|---|---|---|---|---|---|---|
| SE NE 26 | 3N | 7E | 1 | -0- | -0- | -0- | -0- | -0- | -0- | API-30186<br>4-21-82 DRLG. TO 6013'. ASPEN SHALE. 4-27-82 DRLG. TO 6761' KELVIN. 5-3-82 DRLG. TO 7631' KELVIN. 5-9-82 DRLG. TO 8344' KELVIN. 5-15-82 DRLG. TO 9324'. KELVIN. 5-20-82 DRLG. TO 9917' KELVIN. |

GAS: (MCF)

Sold NONE

Flared/Vented ✓

Used On/Off Lease ✓

OIL or CONDENSATE: (To be reported in Barrels)

On hand at beginning of month NONE

Produced during month ✓

Sold during month ✓

Unavoidably lost ✓

Reason: ✓

On hand at end of month ✓

DRILLING/PRODUCING WELLS: This report must be filed on or before the sixteenth day of the succeeding month following production for each well. Where a well is temporarily shut-in, a negative report must be filed. *THIS REPORT MUST BE FILED IN DUPLICATE.*

Note: The API number must be listed on each well.

RECEIVED
MAY 19 1982
DIVISION OF
OIL, GAS & MINING

UTAH
Summit County
Wildcat Field
Location: SENE Sec. 26 T3N-R7E
Lease: W-47812

Logan Federal #1

4-15-82 Drlg. to 5670'. Made 44'. Frontier. Circ. TOH w/ wire line. RD stearing tool. TOH w/ Dyna Drill. Made up new BHA. TIH w/ bit #20. Reamed side track from 5552' to 5626'. Drlg. new hole. Circ - dropped survey, adjusted depth on survey. Dev. 3¼° @ 5617'. SO 33 W. Drlg. 8-3/4" hole to 5670'. 50% sand, 50% shale, some cmt. MW 8.6 ppg. Vis. 42 seconds. WL 16.8.

4-16-82 Drlg. to 5700'. Made 117'. Frontier. Dev. 3-3/4° @ 5680', No 75 W. Drlg. 8-3/4" hole, 5670'- 5678'. Circ. Drlg. 8-3/4" hole, 5678' - 5700'. Circ. TOH, LD 8-3/4" BHA. PU 12½" hole opener & BHA-TIH. Opened hole 5586' - 5605'. Worked BHA @ 5605'. Circ. would not go NRS @ 5550', 2' above kick off. TOH w/ #1, 12¼" hole opener. LD-NRS. - TIH w/ hole opener & NRS 62' above opener. MW 8.7 ppg. Vis. 45 seconds. WL 14.1.

4-17-72 Drlg. to 5661'. Made 56'. Frontier. TIH, reamed, 5641'-5653'. TOH to collars, circ. hole. Ck-d collars & cut drlg. line. PU new BHA & TIH. Reamed, 5559' to 5653' w/ HO #2. Reamed, 5653'-5661'. MW 8.7 ppg. Vis. 42 seconds. WL 10.6.

4-18-82 Drlg. to 5700'. Made 30'. Opened hole 5661'-5680'. TOH, lost 1½ cores off reamer. PU bit, changed orders. WO fisherman. PU jet basket. TIH. Fished for cones @ 5680'. Chained out of hole. LD fishing tools-no fish. PU bit & BHA. TIH w/ 12¼" bit. Cleaned hole, WTB @ 5680'. Drlg. 12¼" hole from 5680' to 5691'. MW 8.7 ppg. Vis. 42 seconds. WL 10.6.

4-19-82 Drlg. to 5749'. Made 49'. Silt stone. Drlg. 12¼" to 5101'. Circ. TOH w/ 12¼" bit. MU magnet, TIH. Worked magnet. TOH, recovered total fish. Made up BHA, TIH. Reamed 60'. Worked BOP. Drlg. 5701' to 5749'. Dev. 3¼° SO 20 East @ 5725'. MW 8.7 ppg. Vis. 42 seconds. WL 10.3

4-20-82 Drlg. to 5828'. Made 79'. Aspen Shale. Dev. 3° S-37W, @ 5773'. Dropped survey tool. Changed out Btm. hole assembly. TIH. Reamed from 5648' - 5793'. MW 8.7 ppg. Vis. 41 seconds. WL 9.2 ppg.

4-21-82 Drlg. to 6013'. Made 185'. Aspen Shale. Dev. 3-3/4° S-35-W @ 5980'. Drlg. to Bit #23. MW 8.7 ppg. Vis. 44 seconds. WL 9.3.

4-22-82 Drlg. to 6106'. Made 93'. Bear River. Dev. 3½° So-34-W @ 5989'. Circ. Drlg.-high torque. Circ., Tripped. Added IBS. MW 8.8 ppg. Vis. 44 seconds. WL 8.6.

4-23-82 Drlg. to 6215'. Made 109'. Bear River. Circ & reamed. Survey-miss run. MW 8.7 ppg. Vis. 43 seconds. WL 9.3.

4-24-82 Drlg. to 6358'. Made 143'. Kelvin. Dev. 4° So-29-W @ 6150'. Tripped, PU 2-DC's. Break in new bit. MW 8.7 ppg. Vis. 45 seconds. WL 8.1.

4-25-82 Drlg. to 6500'. Made 142'. Kelvin. Dev. 4½° S-25W @ 6399'. Circ. Reamed. MW 8.1 ppg. Vis. 43 seconds. WL 8.4.

4-26-82 Drlg. to 6599'. Made 99'. Kelvin. Drlg. 6540'-high torque. Dev. 3½° So-25W @ 6465'. Tripped. Bread in bit. MW 8.7 ppg. Vis. 44 seconds. WL 7,8.

4-27-82 Drlg. to 6761'. Made 162'. Kelvin. Dev. 4¼° So-25-W @ 6628'. MW 8.6 ppg. Vis. 50 seconds. WL 7.7.

4-28-82 Drlg. to 6907'. Made 146'. Kelvin. Drlg. w/normal torque. MW 8.7 ppg. Vis. 46 seconds. WL 8.0.

4-29-82 Drlg. to 6980'. Made 73'. Kelvin. Dev. 3½° So-12-W @ 6898'. Circ. drill off test. TOH, PU 3 jts. pipe. TIH. Reamed 50'. Break in bit. MW 8.7 ppg. Vis. 51 seconds. WL 8.2.

Form DOGC-4

# STATE OF UTAH

DEPARTMENT OF NATURAL RESOURCES
DIVISION OF OIL & GAS CONSERVATION
4241 STATE OFFICE BUILDING
SALT LAKE CITY, UTAH 84114
533-5771

State Lease No. .....
Federal Lease No. 71-047812
Indian Lease No. .....
Fee & Pat. .....

## REPORT OF OPERATIONS AND WELL STATUS REPORT

STATE Utah COUNTY Summit FIELD/LEASE Wildcat/Logan Federal #1

The following is a correct report of operations and production (including drilling and producing wells) for the month of: JUNE, 19 82.

Agent's Address: 410 17th Street, Suite 1400, Denver, CO 80202
Phone No. (303) 623-1000

Company: Davis Oil Company
Signed: Pamela Leighton
Title: Production Services Manager

| Sec. and ¼ of ¼ | Twp. | Range | Well No. | Days Produced | Barrels of Oil | Gravity | Cu. Ft. of Gas (In thousands) | Gallons of Gasoline Recovered | Barrels of Water (if none, so state) | API NUMBER/REMARKS (If drilling, depth; if shut down, cause; date and result of test for gasoline content of gas) |
|---|---|---|---|---|---|---|---|---|---|---|
| SE NE 26 | 3N | 7E | 1 | -0- | -0- | -0- | -0- | -0- | -0- | API-30186<br>5-21-82 DEPTH AT 9942'.<br>6-14-82 DRLG. TO 11261'.<br>6-20-82 DRLG. TO 11495'. |

GAS: (MCF)
Sold: NONE
Flared/Vented: ↓
Used On/Off Lease: ↓

OIL or CONDENSATE: (To be reported in Barrels)
On hand at beginning of month: NONE
Produced during month: ↓
Sold during month: ↓
Unavoidably lost: ↓
Reason: ↓
On hand at end of month: ↓

DRILLING/PRODUCING WELLS: This report must be filed on or before the sixteenth day of the succeeding month following production for each well. Where a well is temporarily shut-in, a negative report must be filed. *THIS REPORT MUST BE FILED IN DUPLICATE.*

Note: The API number must be listed on each well.

Form 9-331
(May 1963)

UNITED STATES
DEPARTMENT OF THE INTERIOR
GEOLOGICAL SURVEY

SUBMIT IN TRIPLICATE*
(Other instructions on reverse side)

Form approved.
Budget Bureau No. 42-R1424.

# SUNDRY NOTICES AND REPORTS ON WELLS

(Do not use this form for proposals to drill or to deepen or plug back to a different reservoir. Use "APPLICATION FOR PERMIT—" for such proposals.)

5. LEASE DESIGNATION AND SERIAL NO.: U-47812

6. IF INDIAN, ALLOTTEE OR TRIBE NAME:

7. UNIT AGREEMENT NAME:

8. FARM OR LEASE NAME: LOGAN FEDERAL

9. WELL NO.: #1

10. FIELD AND POOL, OR WILDCAT: Wildcat

11. SEC., T., R., M., OR BLK. AND SURVEY OR AREA: SENE Sec. 26 T3N-R7E

12. COUNTY OR PARISH: Summit

13. STATE: UT

1. OIL WELL [X] GAS WELL [ ] OTHER

2. NAME OF OPERATOR: DAVIS OIL COMPANY

3. ADDRESS OF OPERATOR: 410 17th Street, Suite 1400, Denver, Colorado 80302

4. LOCATION OF WELL (Report location clearly and in accordance with any State requirements.* See also space 17 below.) At surface

14. PERMIT NO.:

15. ELEVATIONS (Show whether DF, RT, GR, etc.):

16. Check Appropriate Box To Indicate Nature of Notice, Report, or Other Data

NOTICE OF INTENTION TO:

| | | | |
|---|---|---|---|
| TEST WATER SHUT-OFF | [ ] | PULL OR ALTER CASING | [ ] |
| FRACTURE TREAT | [ ] | MULTIPLE COMPLETE | [ ] |
| SHOOT OR ACIDIZE | [ ] | ABANDON* | [ ] |
| REPAIR WELL | [ ] | CHANGE PLANS | [ ] |
| (Other) | | | |

SUBSEQUENT REPORT OF:

| | | | |
|---|---|---|---|
| WATER SHUT-OFF | [ ] | REPAIRING WELL | [ ] |
| FRACTURE TREATMENT | [ ] | ALTERING CASING | [ ] |
| SHOOTING OR ACIDIZING | [ ] | ABANDONMENT* | [ ] |
| (Other) Progress Report | | | [X] |

(NOTE: Report results of multiple completion on Well Completion or Recompletion Report and Log form.)

17. DESCRIBE PROPOSED OR COMPLETED OPERATIONS (Clearly state all pertinent details, and give pertinent dates, including estimated date of starting any proposed work. If well is directionally drilled, give subsurface locations and measured and true vertical depths for all markers and zones pertinent to this work.)*

5-16-82 Depth at 9516'.

6-14-82 Depth at 11261'. Made 1745'.Converted to salt base mud at 10731'. Started to run electic logs at 11261'.

6-15-82 Drlg. depth at 11261'. Logging at 11254 to 11200.

RECEIVED
JUN 24 1982
DIVISION OF
OIL, GAS & MINING

18. I hereby certify that the foregoing is true and correct

SIGNED Coleen A. Evans TITLE Drilling Secretary DATE 6-15-82

(This space for Federal or State office use)

APPROVED BY _____ TITLE _____ DATE _____

CONDITIONS OF APPROVAL, IF ANY:

*See Instructions on Reverse Side

Form DOGC-4

# STATE OF UTAH

DEPARTMENT OF NATURAL RESOURCES
DIVISION OF OIL & GAS CONSERVATION
4241 STATE OFFICE BUILDING
SALT LAKE CITY, UTAH 84114
533-5771

State Lease No. J.C.
Federal Lease No. 71-047812
Indian Lease No.
Fee & Pat.

## REPORT OF OPERATIONS AND WELL STATUS REPORT

STATE Utah COUNTY Summit FIELD/LEASE Wildcat/Logan Federal #1

The following is a correct report of operations and production (including drilling and producing wells) for the month of: July, 19 82.

Agent's Address: 410 17th Street, Suite 1400, Denver, CO 80202
Phone No.: (303) 623-1000

Company: Davis Oil Company
Signed: Pamela Leighton
Title: Production Services Manager

| Sec. and ¼ of ¼ | Twp. | Range | Well No. | Days Produced | Barrels of Oil | Gravity | Cu. Ft. of Gas (In thousands) | Gallons of Gasoline Recovered | Barrels of Water (if none, so state) | API NUMBER/REMARKS (If drilling, depth; if shut down, cause; date and result of test for gasoline content of gas) |
|---|---|---|---|---|---|---|---|---|---|---|
| SE NE 26 | 3N | 7E | 1 | 0 | NONE | N/A | NONE | — | NONE | API-30186<br>6-21-82<br>DRLG. @ 11,495', TWIN CREEK. RAN 278 JTS. 9 5/8" csg — INTERMEDIATE STRING. — LANDED @ 11,432.73' KB CEMENTED W/50 SXS CLASS "A" & ADDITIVES + 2750 SXS CLASS "G" & ADDITIVES. FULL RETURNS.<br>7-17-82<br>DRLG. @ 13568', NUGGET. STUCK IN HOLE.<br>7-20-82<br>DEPTH @ 13568', FISHING. |

GAS: (MCF)
Sold: NONE
Flared/Vented: ✓
Used On/Off Lease:

OIL or CONDENSATE: (To be reported in Barrels)
On hand at beginning of month: NONE
Produced during month:
Sold during month:
Unavoidably lost:
Reason:
On hand at end of month: ✓

DRILLING/PRODUCING WELLS: This report must be filed on or before the sixteenth day of the succeeding month following production for each well. Where a well is temporarily shut-in, a negative report must be filed. *THIS REPORT MUST BE FILED IN DUPLICATE.*

Note: The API number must be listed on each well.

**Amoco Production Company (USA)**

Amoco Building
17th & Broadway
Denver, Colorado 80202
303-830-4040

Robert B. Wilson
Division Landman

July 14, 1982

RECEIVED
JUL 16 1982
State of
Utah
State Land Board

State Lands and Forestry Division
3100 State Office Building
Salt Lake City, Utah 84114

Attention: Mr. Donald G. Prince

#1 Logan Federal
N. Pineview Area
Summit County
Utah

Gentlemen:

Amoco Production Company, as leasehold owner in the W/2, SE/4 of Section 25, Township 3 North, Range 7 East, hereby agrees to allow the bottom hole location for the captioned well to be within 400' of the Section 25 lease line. We, therefore, support Davis Oil Company's request for an exception to Rule C-3(b).

Yours very truly,

Robert B. Wilson

Robert B. Wilson

RBW:jf

cc: Davis Oil Company
Attention: Mr. Lynn Belcher

Form 9-331
(May 1963)

UNITED STATES
DEPARTMENT OF THE INTERIOR
GEOLOGICAL SURVEY

SUBMIT IN TRIPLICATE*
(Other instructions on reverse side)

Form approved.
Budget Bureau No. 42-R1424.

# SUNDRY NOTICES AND REPORTS ON WELLS

(Do not use this form for proposals to drill or to deepen or plug back to a different reservoir. Use "APPLICATION FOR PERMIT—" for such proposals.)

5. LEASE DESIGNATION AND SERIAL NO.: U-47812

6. IF INDIAN, ALLOTTEE OR TRIBE NAME:

7. UNIT AGREEMENT NAME:

8. FARM OR LEASE NAME: LOGAN FEDERAL

9. WELL NO.: #1

10. FIELD AND POOL, OR WILDCAT: Wildcat

11. SEC., T., R., M., OR BLK. AND SURVEY OR AREA: SENE Sec. 26 T3N-R7E

12. COUNTY OR PARISH: Summit

13. STATE: UT

1. OIL WELL [X] GAS WELL [ ] OTHER

2. NAME OF OPERATOR: DAVIS OIL COMPANY

3. ADDRESS OF OPERATOR: 410 17th Street, Suite 1400, Denver, Colorado 80302

4. LOCATION OF WELL (Report location clearly and in accordance with any State requirements.* See also space 17 below.)
At surface

14. PERMIT NO.:

15. ELEVATIONS (Show whether DF, RT, GR, etc.):

16. **Check Appropriate Box To Indicate Nature of Notice, Report, or Other Data**

NOTICE OF INTENTION TO:

| | | | |
|---|---|---|---|
| TEST WATER SHUT-OFF | [ ] | PULL OR ALTER CASING | [ ] |
| FRACTURE TREAT | [ ] | MULTIPLE COMPLETE | [ ] |
| SHOOT OR ACIDIZE | [ ] | ABANDON* | [ ] |
| REPAIR WELL | [ ] | CHANGE PLANS | [ ] |
| (Other) | | | [ ] |

SUBSEQUENT REPORT OF:

| | | | |
|---|---|---|---|
| WATER SHUT-OFF | [ ] | REPAIRING WELL | [ ] |
| FRACTURE TREATMENT | [ ] | ALTERING CASING | [ ] |
| SHOOTING OR ACIDIZING | [ ] | ABANDONMENT* | [ ] |
| (Other) Progress Report | | | [X] |

(NOTE: Report results of multiple completion on Well Completion or Recompletion Report and Log form.)

17. DESCRIBE PROPOSED OR COMPLETED OPERATIONS (Clearly state all pertinent details, and give pertinent dates, including estimated date of starting any proposed work. If well is directionally drilled, give subsurface locations and measured and true vertical depths for all markers and zones pertinent to this work.)*

6-15-82 Drilling depth at 11,261'. Logging from 11,254' to 11,200'.

6-20-82 Drilling depth at 11,495'. Running intermediate casing.
Ran 278 jts of 9-5/8" casing as follows:
11 jts. of 62.8#, L2125
32 jts. of 62.8#, SMT95
25 jts. of 53.5#, S95
24 jts. of 53.5#, P110
95 jts. of 47.0#, L-80
1 jt. of 47.0#, N-80
36 jts. of 47.0#, S95
60 jts. of 43.5#, P110
2 jts. of 53.5#, N-80
Casing landed at 11,432.73' KB. Cemented with 50 sxs of Preflush Class A cement with additives followed by 2750 sxs. of Class "G" cement with additives. Received full returns. NU and tested BOP. Resumed drilling.

7-15-82 Drilling depth at 13437'. Present operation - drilling.

RECEIVED
JUL 19 1982
DIVISION OF
OIL, GAS & MINING

18. I hereby certify that the foregoing is true and correct

SIGNED C.A. Evans TITLE Drilling Secretary DATE 7-15-82

(This space for Federal or State office use)

APPROVED BY _____ TITLE _____ DATE _____
CONDITIONS OF APPROVAL, IF ANY:

*See Instructions on Reverse Side

Form 9-331
(May 1963)

UNITED STATES
DEPARTMENT OF THE INTERIOR
GEOLOGICAL SURVEY

SUBMIT IN TRIPLICATE*
(Other instructions on reverse side)

Form approved.
Budget Bureau No. 42-R1424.

# SUNDRY NOTICES AND REPORTS ON WELLS

(Do not use this form for proposals to drill or to deepen or plug back to a different reservoir. Use "APPLICATION FOR PERMIT—" for such proposals.)

1. OIL WELL [X] GAS WELL [ ] OTHER

2. NAME OF OPERATOR: DAVIS OIL COMPANY

3. ADDRESS OF OPERATOR: 410 17th Street, Suite 1400, Denver, Colorado 80302

4. LOCATION OF WELL (Report location clearly and in accordance with any State requirements. See also space 17 below.) At surface

RECEIVED
AUG 19 1982
DIVISION OF
OIL, GAS & MINING

5. LEASE DESIGNATION AND SERIAL NO.: U-47812

6. IF INDIAN, ALLOTTEE OR TRIBE NAME:

7. UNIT AGREEMENT NAME:

8. FARM OR LEASE NAME: LOGAN FEDERAL

9. WELL NO.: #1

10. FIELD AND POOL, OR WILDCAT: Wildcat

11. SEC., T., R., M., OR BLK. AND SURVEY OR AREA: SENE Sec. 26 T3N-R7E

12. COUNTY OR PARISH: Summit

13. STATE: UT

14. PERMIT NO.: API # 43043-30186

15. ELEVATIONS (Show whether DF, RT, GR, etc.):

16. Check Appropriate Box To Indicate Nature of Notice, Report, or Other Data

| NOTICE OF INTENTION TO: | | | | SUBSEQUENT REPORT OF: | | | |
|---|---|---|---|---|---|---|---|
| TEST WATER SHUT-OFF | [ ] | PULL OR ALTER CASING | [ ] | WATER SHUT-OFF | [ ] | REPAIRING WELL | [ ] |
| FRACTURE TREAT | [ ] | MULTIPLE COMPLETE | [ ] | FRACTURE TREATMENT | [ ] | ALTERING CASING | [ ] |
| SHOOT OR ACIDIZE | [ ] | ABANDON* | [ ] | SHOOTING OR ACIDIZING | [ ] | ABANDONMENT* | [ ] |
| REPAIR WELL | [ ] | CHANGE PLANS | [ ] | (Other) Progress Report | | | [X] |
| (Other) | | | | (Note: Report results of multiple completion on Well Completion or Recompletion Report and Log form.) | | | |

17. DESCRIBE PROPOSED OR COMPLETED OPERATIONS (Clearly state all pertinent details, and give pertinent dates, including estimated date of starting any proposed work. If well is directionally drilled, give subsurface locations and measured and true vertical depths for all markers and zones pertinent to this work.)*

7-16-82 Drilling depth at 13,478'. Present operation - drilling.

7-17-82 Drilling depth at 13,568'. Stuck in hole at Nugget formation.

7-23-82 Drilling depth at 13,492'. Tripped out of hole with fish

7-24-82 Drilling depth at 13,492'TD. Logged at TD.

7-25-82 Drilling depth at 13,492'TD. Ran 7" casing as follows:

7-26-82 38#, 112 jts. P110

7-27-82 35#, 254 jts. P110
35#, 245 jts. P110
35#, 88 jts. P110

Casing landed at 13,488'. Cemented with 135 sxs. of scavenger followed by 875 sxs. of 50/50 Pos Mix with additives. Received full returns to surface. Plugged down at 9:22 A.M. 7-17-82. Rigged down and checked BOP. Rig released at 10:30 P.M., 7-27-82.

18. I hereby certify that the foregoing is true and correct

SIGNED C.A. Evans TITLE Drilling Secretary DATE 7-28-82

(This space for Federal or State office use)

APPROVED BY _____ TITLE _____ DATE _____
CONDITIONS OF APPROVAL, IF ANY:

*See Instructions on Reverse Side

LOGAN FEDERAL #1
SENE Sec. 26, T3N, R7E
Summit Co., Utah
U-47812

Summit Co., Utah

LOGAN FED #1
NUGGET FORMATION
PBTD 13,342'
DAYS FROM RIG UP 1

PERFORATION none
T.D. 13,492'
CUM IDC $589,818.00

7-31-82 Well SI, MORT.

8-1-82 Well SI, MORT.

PRESENT OPERATION - Finish leveling location, MI RUCT.

8-2-82 SITP 0#, SICP 0#, Set dead men, RU OWP, run CBL/VDL-GR/CCL, temp 200° F, R D-OWP, level location. BLOTR 0, BLWTR 0.

8-3-82 Finish leveling location. MIRUCU 8-3-82 Gamache #4. Set piperacks and unload 450 joints 2 7/8 EUE 8RD N-80 work string.

8-4-82 TIH with 5 3/4" mill and 7" scraper and 425 joints 2 7/8 N-80 work string. Tag up at 13,307. Nipple up BOP and circulate 180 BBLS 2%. Casing half full heavy drilling mud. Flush with 210 BBLS fresh water. Unable to circulate any deeper Test BOP and casing to 5,000#, held OK. TOH with 168 joints and rig up Halliburton and blow hole dry with 300,000 SCF-N2. SIFN.

8-5-82 Finish TOH with tubing, scraper and mill. Rig up OWP, run Gamma ray. TIH with 4" casing gun and correlated shots with Schlumberger log dated 7/24/82, 2 JSPF F/45 holes. Small gas blow. Rig down OWP. TIH with Baker model R-3 double grip Packer 1-2 7/8 x 2 1/4 SN and 72 joints 2 7/8 N-80 work string. Well started to flow. SI pressure 1,250. Lay line to test tank and rig up choke. Start flowing. Est. 5 MMCF/D.

| | | | BF | BO | BW | |
|---|---|---|---|---|---|---|
| 5:00 P.M. | 24/64 | 1,250 | 40 | 0 | 40 | Trace of Oil |
| 6:00 | 24/64 | 1,600 | 18 | 0 | 18 | Trace of Oil |
| 7:00 | 24/64 | 1,750 | 8 | 1 | 18 | |
| 8:00 | 24/64 | 1,550 | 10 | 1 | 9 | |
| 9:00 | 24/64 | 1,500 | 20 | 3 | 17 | |
| 10:00 | 24/64 | 1,450 | 18 | 8 | 10 | |
| 11:00 | 24/64 | 1,400 | 18 | 12 | 6 | |
| 12:00 | 24/64 | 1,450 | 20 | 18 | 2 | |
| 1:00 | 24/64 | 1,300 | 5 | 5 | 0 | |
| 2:00 | 24/64 | 1,350 | 13 | 12 | 1 | |
| 3:00 | 24/64 | 1,400 | 2 | 2 | 0 | |
| 4:00 | 24/64 | 1,400 | 16 | 14 | 2 | |
| 5:00 | 24/64 | 1,300 | 8 | 7 | 1 | |
| TOTALS | | | 196 | 83 | 113 | |

BLOTR +83, BLWTR -7 CUM IDC $624,749.00

8-6-82 Flow test 24 hrs. recovered 277 BBLS fluid 270 B.O. 7 B.W. est. gas 4 MMCFD well head temp. 35°.

| HOURS | CHOKE | FTP | FB | BO | BW | BS |
|---|---|---|---|---|---|---|
| 6:00 AM | 24/64 | 1350 | 10 | 9 | 1 | 1% |
| 7:00 AM | 24/64 | 1300 | 17 | 15 | 2 | 2% |
| 8:00 AM | 24/64 | 1350 | 11 | 10 | 1 | 0% |
| 9:00 AM | 24/64 | 1300 | 11 | 11 | 0 | 0% |
| 10:00 AM | 24/64 | 1300 | 17 | 16 | 1 | 0% |
| 11:00 AM | 24/64 | 1250 | 8 | 8 | 0 | 0% |
| 12:00 AM | 24/64 | 1250 | 10 | 9 | 1 | 1% |
| 1:00 PM | 24/64 | 1250 | 10 | 10 | 0 | 4% |
| 2:00 PM | 24/64 | 1300 | 17 | 17 | 0 | 0% |
| 3:00 PM | 24/64 | 1250 | 6 | 6 | 0 | 1/10% |
| 4:00 PM | 24/64 | 1350 | 11 | 11 | 0 | 0% |
| 5:00 PM | 24/64 | 1300 | 10 | 9 | 1 | 1% |
| 6:00 PM | 24/64 | 1300 | 18 | 18 | 0 | tr |
| 7:00 PM | 24/64 | 1250 | 8 | 9 | 0 | 1% |
| 8:00 PM | 24/64 | 1300 | 14 | 14 | tr | 0% |
| 9:00 PM | 24/64 | 1200 | 15 | 15 | 0 | tr |
| 10:00 PM | 24/64 | 1250 | 10 | 10 | tr | tr |
| 11:00 PM | 24/64 | 1250 | 13 | 13 | 0 | tr |
| 12:00 PM | 24/64 | 1250 | 10 | 10 | 0 | tr |
| 1:00 AM | 24/64 | 1300 | 16 | 16 | 0 | tr |
| 2:00 AM | 24/64 | 1300 | 11 | 11 | 0 | tr |
| 3:00 AM | 24/64 | 1250 | 8 | 8 | 0 | tr |
| 4:00 AM | 24/64 | 1300 | 14 | 14 | 0 | tr |
| 5:00 AM | 24/64 | 1250 | 2 | 2 | 0 | tr |
| TOTALS | | | 277 | 270 | 7 | |

BLOTR +360 BLWTR 0

8-7-82 Flowed 24 hrs, 366 BF, 344 BO, 22 BW, est gas 4.2 MMCFD.

| | | | | | | |
|---|---|---|---|---|---|---|
| 6:00 A.M. | 24/64 ck | 1,250# FTP | 10 BF | 10 BO | 0 BW | 0% B.S. |
| 7:00 | 24/64 ck | 1,250# FTP | 12 BF | 10 BO | 2 BW | 0% B.S. |
| 8:00 | 24/64 ck | 1,450# FTP | 20 BF | 11 BO | 9 BW | 0% B.S. |
| 9:00 | 24/64 ck | 1,400# FTP | 18 BF | 7 BO | 11 BW | 0% B.S. |
| 10:00 | 24/64 ck | 1,450# FTP | 13 BF | 13 BO | 0 BW | 0% B.S. |
| 11:00 | 24/64 ck | 1,400# FTP | 8 BF | 8 BO | 0 BW | 0% B.S. |
| 12:00 P.M. | 24/64 ck | 1,350# FTP | 18 BF | 18 BO | 0 BW | 0% B.S. |
| 1:00 | 24/64 ck | 1,350# FTP | 25 BF | 25 BO | 0 BW | 0% B.S. |
| 2:00 | 24/64 ck | 1,400# FTP | 13 BF | 13 BO | 0 BW | 0% B.S. |
| 3:00 | 24/64 ck | 1,350# FTP | 15 BF | 15 BO | 0 BW | 0% B.S. |
| 4:00 | 24/64 ck | 1,300# FTP | 16 BF | 16 BO | 0 BW | 0% B.S. |
| 5:00 | 24/64 ck | 1,300# FTP | 13 BF | 13 BO | 0 BW | 0% B.S. |
| 6:00 | 24/64 ck | 1,300# FTP | 18 BF | 18 BO | 0 BW | 0% B.S. |
| 7:00 | 24/64 ck | 1,450# FTP | 15 BF | 15 BO | 0 BW | 0% B.S. |
| 8:00 | 24/64 ck | 1,500# FTP | 10 BF | 10 BO | 0 BW | 0% B.S. |
| 9:00 | 24/64 ck | 1,500# FTP | 26 BF | 26 BO | 0 BW | 0% B.S. |
| 10:00 | 24/64 ck | 1,400# FTP | 17 BF | 17 BO | 0 BW | 0% B.S. |
| 11:00 | 24/64 ck | 1,300# FTP | 14 BF | 14 BO | 0 BW | 0% B.S. |
| 12:00 A.M. | 24/64 ck | 1,350# FTP | 13 BF | 13 BO | 0 BW | 0% B.S. |
| 1:00 | 24/64 ck | 1,300# FTP | 18 BF | 18 BO | 0 BW | 0% B.S. |
| 2:00 | 24/64 ck | 1,300# FTP | 14 BF | 14 BO | 0 BW | 0% B.S. |
| 3:00 | 24/64 ck | 1,350# FTP | 14 BF | 14 BO | 0 BW | 0% B.S. |
| 4:00 | 24/64 ck | 1,350# FTP | 12 BF | 12 BO | 0 BW | 0% B.S. |
| 5:00 | 24/64 ck | 1,350# FTP | 14 BF | 14 BO | 0 BW | 0% B.S. |

BLOTR +704, BLWTR +22.

8-8-82 Flow test 22 hrs, 284 BO, 0 BW, est 4 MMCF/D gas. Rig up OWP and set plug in tbg one jt above pkr, plug held.

| | | | | | |
|---|---|---|---|---|---|
| 6:00 A.M. | 24/64 ck | 1,300# FTP | 13 BF | 13 BO | 0 BW |
| 7:00 | 24/64 ck | 1,300# FTP | 15 BF | 15 BO | 0 BW |
| 8:00 | 24/64 ck | 1,350# FTP | 21 BF | 21 BO | 0 BW |
| 9:00 | 24/64 ck | 1,350# FTP | 5 BF | 5 BO | 0 BW |
| 10:00 | 24/64 ck | 1,300# FTP | 12 BF | 12 BO | 0 BW |
| 11:00 | 24/64 ck | 1,350# FTP | 13 BF | 13 BO | 0 BW |
| 12:00 P.M. | 24/64 ck | 1,350# FTP | 10 BF | 10 BO | 0 BW |
| 1:00 | 24/64 ck | 1,400# FTP | 13 BF | 13 BO | 0 BW |
| 2:00 | 24/64 ck | 1,350# FTP | 8 BF | 8 BO | 0 BW |
| 3:00 | SI | 2,600# FTP | 0 BF | 0 BO | 0 BW |
| 4:00 | 24/64 ck | 1,600# FTP | 10 BF | 10 BO | 0 BW |
| 5:00 | SI | 2,600# FTP | 0 BF | 0 BO | 0 BW |
| 6:00 | 20/64 ck | 1,900# FTP | 10 BF | 10 BO | 0 BW |
| 7:00 | 22/64 ck | 1,700# FTP | 12 BF | 12 BO | 0 BW |
| 8:00 | 24/64 ck | 1,550# FTP | 15 BF | 15 BO | 0 BW |
| 9:00 | 24/64 ck | 1,400# FTP | 11 BF | 11 BO | 0 BW |
| 10:00 | 24/64 ck | 1,250# FTP | 16 BF | 16 BO | 0 BW |
| 11:00 | 24/64 ck | 1,350# FTP | 13 BF | 13 BO | 0 BW |
| 12:00 A.M. | 24/64 ck | 1,300# FTP | 15 BF | 15 BO | 0 BW |
| 1:00 | 24/64 ck | 1,300# FTP | 10 BF | 10 BO | 0 BW |
| 2:00 | 24/64 ck | 1,350# FTP | 15 BF | 15 BO | 0 BW |
| 3:00 | 24/64 ck | 1,300# FTP | 12 BF | 12 BO | 0 BW |
| 4:00 | 24/64 ck | 1,300# FTP | 18 BF | 18 BO | 0 BW |
| 5:00 | 24/64 ck | 1,350# FTP | 17 BF | 17 BO | 0 BW |

BLOTR +988, BLWTR +22.

PRESENT OPERATION - TIH w/ seal assembly and tbg. Flange up tree.

8-9-82 Finish rigging up Cudd snubbing unit. Snub out and lay down in singles 81 jts tbg and pkr. Flowed well out csg while snubbing tbg. Recovered 152 BO, 0 BW, est 4 MMCF/D, 12 hrs. CP 1,350#. Rig down Cudd snubbing unit. Rig up OWP. Made guage ring run w/ 5.790 ring to 12,790'. TIH w/ Baker retrieva - D pkr and set at 12,710' w/ 10' seal bore extension, 6' mill out extension 2.11 F-nipple, 10' x 2 7/8 P-105 sub, 2.25 R-nipple w/ 2.197. No go 2' x 2 7/8 P-105 sub, 2 7/8 Baker pump off check valve. SI well 10 hrs, CP 2,800#. Bleeding csg down to check if pkr holds. BLOTR +1,140, BLWTR +22.

8-10-82 Finish bleeding well down, RIH /w 20' seal assembly, 6' x 2 7/8" P-105 tbg sub, 404 jts 2 7/8" 6.5# EUE 8rd tbg. Treat water out of oil and batch oil in tanks. SD for night. BLOTR +1,140, BLWTR +22.

8-11-82 Rig up Halliburton, pumped 380 BBLS Nugget formation oil containing 165 gals coat A-1135 down backside. Stung into pkr. Pressure tested pkr to 5,000 PSI. Landed tbg. Nipple down BOP. Nipple tree, pressure test tree to 8,000 PSI. Drop ball pressure tbg to 4,000 PSI, blew check valve off. Well starting flowing. Rig down Halliburton. Rig down and release Gamache Rig #4. 8-11-82 - Rig up Johnson Macco test unit. Total BBLS pumped 410. Heat treated and batch oil drain off 200 BBLS water.

| | | | | | | |
|---|---|---|---|---|---|---|
| 9:00 P.M. | 15/64 ck | 1,550# FTP | 0 BF | 0 BO | 0 BW | 0 Gas MCF |
| 10:00 | 16/64 ck | 2,310# FTP | 26 BF | 25 BO | 1 BW | 1.86 MMCF |
| 11:00 | 16/64 ck | 2,095# FTP | 10 BF | 8 BO | 2 BW | 2,21 MMCF |
| 12:00 A.M. | 16/64 ck | 2,172# FTP | 8 BF | 8 BO | 0 BW | 2.32 MMCF |
| 1:00 | 16/64 ck | 2,220# FTP | 8 BF | 8 BO | 0 BW | 2,28 MMCF |
| 2:00 | 16/64 ck | 2,180# FTP | 9 BF | 9 BO | 0 BW | 2.41 MMCF |
| 3:00 | 16/64 ck | 2,206# FTP | 8 BF | 8 BO | 0 BW | 2.43 MMCF |
| 4:00 | 16/64 ck | 2,220# FTP | 8 BF | 8 BO | 0 BW | 2.43 MMCF |
| 5:00 | 16/64 ck | 2,205# FTP | 8 BF | 8 BO | 0 BW | 2.52 MMCF |
| 6:00 | 16/64 ck | 2,217# FTP | 9 BF | 9 BO | 0 BW | 2.52 MMCF |

Totals 97 BF, 94 BO, 3 BW. BLOTR corrected +624, BLWTR +25.

8-12-82 Flow test.

| | | | | | |
|---|---|---|---|---|---|
| 7:00 A.M. | 2,227# FTP | 16/64 ck | 10 BO | 0 BW | 2.6 MCF |
| 8:00 | 2,225# FTP | 16/64 ck | 10 BO | 0 BW | 2.6 MCF |
| 9:00 | 2,205# FTP | 16/64 ck | 10 BO | 0 BW | 2.7 MCF |
| 10:00 | 2,215# FTP | 16/64 ck | 10 BO | 0 BW | 2.6 MCF |
| 11:00 | 2,225# FTP | 16/64 ck | 10 BO | 0 BW | 2.6 MCF |
| 12:00 P.M. | 2,215# FTP | 16/64 ck | 10 BO | 0 BW | 2.6 MCF |
| 1:00 | 2,202# FTP | 16/64 ck | 10 BO | 0 BW | 2.7 MCF |
| 2:00 | 2,197# FTP | 16/64 ck | 10 BO | 0 BW | 2.7 MCF |
| 3:00 | 2,212# FTP | 16/64 ck | 10 BO | 0 BW | 2.7 MCF |
| 4:00 | 2,225# FTP | 16/64 ck | 10 BO | 0 BW | 2.6 MCF |
| 5:00 | 2,205# FTP | 16/64 ck | 10 BO | 0 BW | 2.8 MCF |
| 6:00 | 2,205# FTP | 16/64 ck | 10 BO | 0 BW | 2.8 MCF |
| 7:00 | 2,207# FTP | 16/64 ck | 10 BO | 0 BW | 2.7 MCF |
| 8:00 | 2,208# FTP | 16/64 ck | 10 BO | 0 BW | 2.7 MCF |
| 9:00 | 2,210# FTP | 16/64 ck | 11 BO | 0 BW | 2.7 MCF |
| 10:00 | 2,215# FTP | 16/64 ck | 10 BO | 0 BW | 2.8 MCF |
| 11:00 | 2,215# FTP | 16/64 ck | 10 BO | 0 BW | 2.8 MCF |
| 12:00 A.M. | 2,221# FTP | 16/64 ck | 11 BO | 0 BW | 2.8 MCF |
| 1:00 | 2,220# FTP | 16/64 ck | 11 BO | 0 BW | 2.8 MCF |
| 2:00 | 2,221# FTP | 16/64 ck | 10 BO | 0 BW | 2.8 MCF |
| 3:00 | 2,222# FTP | 16/64 ck | 11 BO | 0 BW | 2.8 MCF |
| 4:00 | 2,224# FTP | 16/64 ck | 11 BO | 0 BW | 2.8 MCF |
| 5:00 | 2,220# FTP | 16/64 ck | 10 BO | 0 BW | 2.8 MCF |
| 6:00 | 2,222# FTP | 16/64 ck | 11 BO | 0 BW | 2.8 MCF |

Totals 246 BO, 0 BW. BLOTR +870, BLWTR +25. CUM IDC $761,790.00

8-13-82 Rigged up Schlumberger to run production logs-could not get logs past packer assy. Pulled tools and ran collar locator and sinker bars and set off at 12,738' at R-Nipple-bottom of packer assy. at 12,741'. Tried to flow well and well died. Shut in at 12 P.M.

| HOURS | CHOKE | FTP | FB | BO | BW | MCF |
|---|---|---|---|---|---|---|
| 7:00AM | 16/64 | 2250 | 11 | 11 | 0 | 2.8 |
| 8:00AM | 16/64 | 2250 | 11 | 11 | 0 | 2.8 |
| 9:00AM | 16/64 | 2250 | 11 | 11 | 0 | 2.8 |
| 10:00AM | | 3150 | | | | |
| 11:00AM | 12/64 | 2782 | 5 | 5 | 0 | 1.3 |
| 12:00AM | 12/64 | 2760 | 4 | 4 | 0 | 1.3 |
| 1:00PM | 12/64 | 2700 | 3 | 3 | 0 | 1.3 |
| 2:00PM | SHUT IN | | | | | |
| 9:00PM | | 1237 | | | | |
| 10:00PM | 16/64 | 150 | 0 | 0 | 0 | 154 MCF |
| 11:00PM | 16/64 | 50 | 0 | 0 | 0 | 48 |
| 12:00PM | 16/64 | 25# | | SHUT IN | | |
| 6:00AM | | 25# | | DIED | | |
| TOTALS | | | 45 | 45 | 0 | BLOTR +915 BLWTR+25 |

8-14-82 Rigged up Halliburton and started to pump had 1,500# at the very first broke to 0 pump 30 BBLS lease crude and press increased to 1,500#, broke to 0, pump 30 more BBLS and could pump in at 3,800#, 1½ BPM. Rigged up wireline truck and ran impression block 1.87 to 12,850'. Block had no marks. Return well to flowing.

| | | | | | | |
|---|---|---|---|---|---|---|
| 1:00 P.M. | 16/64 ck | 1,000# FTP | 0 BF | 0 BO | 0 BW | 0 Gas MCF |
| 2:00 | 16/64 ck | 1,917# FTP | 71 BF | 71 BO | 0 BW | 0 Gas MCF |
| 3:00 | 16/64 ck | 2,250# FTP | 14 BF | 14 BO | 0 BW | 3.0 Gas MCF |
| 4:00 | 16/64 ck | 2,250# FTP | 10 BF | 10 BO | 0 BW | 3.0 Gas MCF |
| 5:00 | SI | | | | | |
| 9:00 | 16/64 ck | 2,650# FTP | | | | |
| 10:00 | 16/64 ck | 2,240# FTP | 12 BF | 12 BO | 0 BW | 3.0 Gas MCF |
| 11:00 | 16/64 ck | 2,245# FTP | 11 BF | 11 BO | 0 BW | 3.0 Gas MCF |
| 12:00 A.M. | 16/64 ck | 2,240# FTP | 10 BF | 10 BO | 0 BW | 3.1 Gas MCF |
| 1:00 | 16/64 ck | 2,240# FTP | 11 BF | 11 BO | 0 BW | 3.1 Gas MCF |
| 2:00 | 16/64 ck | 2,246# FTP | 11 BF | 11 BO | 0 BW | 3.1 Gas MCF |
| 3:00 | 16/64 ck | 2,248# FTP | 12 BF | 12 BO | 0 BW | 3.2 Gas MCF |
| 4:00 | 16/64 ck | 2,258# FTP | 11 BF | 11 BO | 0 BW | 3.1 Gas MCF |
| 5:00 | 16/64 ck | 2,248# FTP | 12 BF | 12 BO | 0 BW | 3.2 Gas MCF |
| 6:00 | 16/64 ck | 2,250# FTP | 12 BF | 12 BO | 0 BW | 3.1 Gas MCF |

Totals 197 BF, 197 BO, 0 BW. BLOTR +1,045, BLWTR +25.

8-15-82 Flowed well from 6:00 A.M. to 2:00 P.M. Closed well in. Rigged up Schlumberger wireline. Put well to flowing. Ran Gradiomanometer, manometer, full bore flow meter, and temperature logs. TOOH w/ log. Closed well in. Rigged down Schlumberger. Recovered 175 BF, 173 BO, 2 BW.

| | | | | | | |
|---|---|---|---|---|---|---|
| 6:00 A.M. | 16/64 ck | 2,255# FTP | 11 BF | 11 BO | 0 BW | 3.240 Gas MMCF |
| 7:00 | 16/64 ck | 2,257# FTP | 11 BF | 11 BO | 0 BW | 3.266 Gas MMCF |
| 8:00 | 16/64 ck | 2,258# FTP | 11 BF | 11 BO | 0 BW | 3.285 Gas MMCF |
| 9:00 | 16/64 ck | 2,260# FTP | 11 BF | 11 BO | 0 BW | 3.285 Gas MMCF |
| 10:00 | 16/64 ck | 2,265# FTP | 11 BF | 11 BO | 0 BW | 3.281 Gas MMCF |
| 11:00 | 16/64 ck | 2,267# FTP | 11 BF | 10 BO | 1 BW | 3.277 Gas MMCF |
| 12:00 P.M. | 16/64 ck | 2,267# FTP | 12 BF | 12 BO | 0 BW | 3.277 Gas MMCF |
| 1:00 | 16/64 ck | 2,272# FTP | 11 BF | 11 BO | 0 BW | 3.277 Gas MMCF |
| | SI to rig up Schlumberger. | | | | | |
| 2:00 | 16/64 ck | 2,272# FTP | 12 BF | 12 BO | 0 BW | 3.255 Gas MMCF |
| 3:30 | 16/64 ck | 3,120# FTP | Opening well to separator. | | | |
| 4:00 | 16/64 ck | 2,327# FTP | 15 BF | 14 BO | 1 BW | 3.153 Gas MMCF |
| 5:00 | 16/64 ck | 2,315# FTP | 11 BF | 11 BO | 0 BW | 3.095 Gas MMCF |
| 6:00 | 16/64 ck | 2,309# FTP | 11 BF | 11 BO | 0 BW | 3.096 Gas MMCF |
| 7:00 | 16/64 ck | 2,319# FTP | 11 BF | 11 BO | 0 BW | 3.034 Gas MMCF |
| 8:00 | 16/64 ck | 2,320# FTP | 11 BF | 11 BO | 0 BW | 3.037 Gas MMCF |
| 9:00 | 16/64 ck | 2,305# FTP | 13 BF | 13 BO | 0 BW | 3.177 Gas MMCF |
| 9:30 | SI well. | | | | | |

BLOTR +1,218, BLWTR +27.

TABLE OF CONTENTS

RESUME..... 1
SUMMARY AND CONCLUSIONS..... 3
FORMATION TOPS..... 4
ELECTRIC LOG AND SHOW DATA..... 5
BIT RECORD.....12
DAILY DRILLING CHRONOLOGY.....14
MUD RECORD.....29
SURVEYS AND DRILLING FUNCTIONS.....34
LITHOLOGY SUMMARY.....37
LITHOLOGIC LOG IN BACK FLAP

RECEIVED
AUG 23 1982
DIVISION OF
OIL, GAS & MINING

# RESUME

| | |
|---|---|
| OPERATOR: | Davis Oil Company |
| WELL NAME & NUMBER: | #1 Logan Federal |
| LOCATION: | SE NE SEC 26 T3N R7E |
| AREA: | North Pineview Prospect/Wildcat |
| COUNTY: | Summit |
| STATE: | Utah |
| ELEVATION: | G.L. 7300' K.B. 7325' |
| ENGINEER: | Mike Cleary, Jack Krug, Ornen International |
| GEOLOGIST: | Michael E. Barber, RP Operating, Inc. |
| SPUD DATE: | 12/21/82 T.D. 7/23/82 |
| COMPLETION DATE: | Pending |
| HOLE SIZE: | 17½" 1008-5730; 12¼" 5552-11495; 8½" 11495-TD |
| CASING: | 20" @ 1008'; 13-3/8" @ 5730'; Window @ 5552'; 9-5/8" @ 11,410' |
| CEMENTING: | Halliburton |
| CONTRACTOR: | Manning Rig #14 |
| EQUIPMENT: | National 110 |
| TOOLPUSHER: | C. Dunnon; R. Gideon, M. Timmons |
| DRILLERS: | Tom Myron, Randy Reynolds, Rocky Suter, Bill Gebhart |
| PUMP: | Emsco FB 1300, Pump 1 & 2 |
| DRILL COLLARS: | 9":7-5/8 Reg, 7" H90; 7":4½ I.F., 5" H90 |
| DRILL PIPE: | 5" 4½ I.F. 19.5#/ft. |
| DRILLING MUD: | Imco |
| MUD TYPE: | Gel/Lime non-lightly dispersed; salt saturated 10731-11495 |
| MUD ENGINEER: | Shel Harras, Sean Butler |
| DRILL STEM TESTS: | None |
| MUD LOGGING: | Tooke Engineering |
| TYPE UNIT: | 2 man, hydraulic monitor, drill rate plotter |
| MUD LOGGING ENGINEERS: | Jeff McClellan, Nicola Stanley, Tom Harris, Brian Nicoles, Todd Thiesse |

RESUME - CONTINUED

| OPEN HOLE LOGS: | RUN # | INTERVAL | TYPE |
|---|---|---|---|
| Schlumberger | 1 | 1008-5730 | BHC/Sonic DIL/SFL |
| " | 2 | 5552-11248 | BHC/Sonic |
| " | 1 | 5552-11211 | DLL/Micro SFL |
| " | 1 | 5564-11210 | Continuous Dipmeter |
| " | 1 | 5552-11210 | FDC-CNL |
| " | 2 | 10690-13484 | DIL-SFL |
| " | 2 | 11198-13484 | FDC-CNL |
| " | 3 | 10680-13481 | BHC/Sonic - Sonic Wavelength |
| " | 2 | 11410-13485 | Dipmeter - FIL |
| " | 1 | Cyberlook | Cyberlook |

DRILL STEM TESTS: None run

TOTAL DEPTH: Driller - 13492; Schlumberger - 13487

DRILLING TIME: 215 days

BOTTOM FM: Nugget SS

## SUMMARY AND CONCLUSIONS

The Davis Oil Logan Federal #1, North Pineview prospect was drilled to T.D. of 13568' in 215 days. Primary objective was the Nugget sandstone, topped at 12758'. Hydrocarbon shows were also possible in the Cretaceous Frontier, Bear River, Kelvin; Jurassic Stump, Twin Creek, as well as the Jura-Triassic Nugget. Production from these formations occurs at nearby Pineview, East Anschutz, Anschutz Ranch, Elkhorn and Lodgepole fields.

Logan Federal #1 is located structurally high on a gently ascending limb (5-10$^{o}$ NW dip) of an overturned anticline, along the leading edge of the Absaroka Thrust fault. Imbricate thrust faults have isolated this structure from those of East Anschutz and Pineview fields. Normal faulting evident on the surface is related to imposition of the Uinta Uplift on the Absaroka Plate. Logan Federal #1 spudded in Middle Frontier sediments on the downthrown block of the East Fork fault (normal). The fault, crossed at 2104', faulted into upper Frontier after which a normal sequence was drilled to T.D.

Drilling problems were due to sloughing and swelling shales and coals in the Frontier and Bear River formations; fractures, thief zones and minor displacement faults in the Kelvin and Preuss formations; fractures and thief zones in the Twin Creek formation; fractures and thief zones ultimately causing differentially stuck pipe in the Nugget formation. The Preuss evaporites presented no problems due in part to the thinness of the salt section, and to the salt-saturated mud system.

No hydrocarbon shows were encountered until the top of the Nugget SS. A small zone in the Preuss fm. contained carbon dioxide, and a fractured zone in the sliderock member of the Twin Creek formation was noteworthy, although no hydrocarbons were detected. Due to overbalanced mud conditions, shows from the fracture zones in the Twin Creek may have been flushed ahead of the bit. The overbalanced conditions must also be taken into consideration in evaluating the Nugget shows. Mud was easily lost into fracture and unconsolidated zones. Visual porosity was generally fair to good, with oil staining and gas shows varying according to the porosity. Electric logs showed porosity from 8-12%, and highs from 14-16% p.v. through the Nugget, generally decreasing in the bottom section. Resistivity was high and a gas effect was observed on the FDC-CNL log showing a possible gas cap and gas/oil contact at 12940'. Water saturations calculated at wellsite varied from 35%-55% down to 13180', and were higher than 63% below 13260'. Based on the visual shows and E-log results, Logan Federal #1 has very good production potential for Davis Oil. No cores or DST's were taken, and completion is pending.

## FORMATION TOPS

Surface Elevation: G.L. 7300' K.B. 7325'

| FORMATION | DEPTH FROM K.B. | | SUB SEA | |
|---|---|---|---|---|
| | SAMPLE TOPS | | | |
| Frontier FM. | Surface | | 7325' | |
| Fault - Grass Ck. Mbr./Dry Hollow Mbr. | 2104' | | 5221' | |
| Oyster Ridge Mbr. | 3112' | | 4213' | |
| Allen Hollow Mbr. | 3312' | | 4013' | |
| Coalville Mbr. | 3570' | | 3755' | |
| Chalk Creek Mbr. | 3652' | | 3673' | |
| Spring Cny. Mbr. | 5210' | | 2115' | |
| Longwall Mbr. | 5530' | | 1795' | |
| Aspen Fm. | 5788' | | 1537' | |
| Bear River Fm. | 6032' | | 1293' | |
| Kelvin Fm. | 6310' | | 1015' | |
| Stump Fm. | 10124' | | - 2799' | |
| Preuss Fm. | 10425' | | - 3100' | |
| Salt | 11313-11322' | | | |
| | | E-LOG TOPS | | E-LOG SUB SEA |
| Twin Ck. Fm. | 11388' | 11402' | - 4063' | - 4077' |
| Giraffe Ck. Mbr. | | | | |
| Leeds Ck. Mbr. | 11864' | 11858' | - 4539' | - 4533' |
| Watton Cny. Mbr. | 12126' | 12126'? | - 4801' | - 4801' |
| Boundary Ridge Mbr. | 12280' | 12282' | - 4955' | - 4957' |
| Rich Mbr. | 12364' | 12352' | - 5039' | - 5027' |
| Sliderock Mbr. | 12598' | 12594' | - 5273' | - 5269' |
| Gypsum Springs Mbr. | 12678' | 12678'? | - 5353' | - 5353' |
| Nugget SS. | 12768' | 12758' | - 5443' | - 5433' |

## SIGNIFICANT DRILLING BREAKS - NUGGET FM.

| INTERVAL | DRILL RATE | TOTAL GAS | PPM C-1 | C-2 | C-3 | C-4 | OIL SHOW |
|---|---|---|---|---|---|---|---|
| 12756-12790' | 5-15 min/ft. | 14 u. | 2,600 | 240 | 60 | | Poor |
| 12800-12810' | 5½ min/ft. | 30 u. | 8,800 | 420 | 180 | 40 | Good-Exc. |
| 12840-12844' | 4-7 min/ft. | 42 u. | 16,800 | 1,200 | 540 | 320 | Good-Exc. |
| 12868' | 4 min/ft. | 56 u. | 13,000 | 1,200 | 720 | 400 | Fair |
| 13004-13010' | 3 min/ft. | 60 u. | 14,000 | 1,200 | 600 | 200 | Poor-Fair |
| 13012-13018' | 3-5 min/ft. | 90 u. | 25,600 | 2,160 | 960 | 480 | Poor-Fair |
| 13090-13094' | 4-5 min/ft. | 55 u. | 13,000 | 1,260 | 540 | 160 | Good |
| 13100-13112' | 2-3 min/ft. | 52 u. | 19,200 | 1,920 | 840 | 480 | Good |
| 13150-13164' | 1-4 min/ft. | 67 u. | 18,800 | 1,800 | 840 | 320 | Good-Exc. |
| 13170-13190' | 4-6 min/ft. | 40 u. | 8,200 | 600 | 90 | 20 | Good-Exc. |
| 13240-13250' | 5 min/ft. | 40 u. | 9,200 | 960 | 420 | 160 | Fair |
| 13252-13260' | 4 min/ft. | 45 u. | 9,400 | 1,020 | 480 | 160 | Good-Exc. |
| 13272-13278' | 3.5 min/ft. | 92 u. | 19,600 | 2,160 | 1320 | 320 | Fair |
| 13290-13298' | 3-5 min/ft. | 40 u. | 8,000 | 720 | 270 | 120 | Good |
| 13368-13376' | 3-4 min/ft. | 54 u. | 11,800 | 1,500 | 780 | 320 | Fair |

$S_W$ VALUES CALCULATED IN NUGGET
USING ARCHIE'S FORMULA FOR WATER SATURATION
ASSUMING AN $R_W$ VALUE OF .142
(Based on $R_{WA}$ through wet Nugget
American Quaker Howell Livestock)

| INTERVAL | SONIC Ø | $R_T$ | $S_W$ |
|---|---|---|---|
| 12760-12790' | 6.5 | 110 | 55% |
| 12810-12840' | 12 | 80 | 35% |
| 12870-12900' | 11 | 60 | 44% |
| 12900-12940' | 11 | 40 | 54% |
| 12960-13000' | 9 | 55 | 57% |
| 13024-13080' | Cycle skipping | | |
| 13102-13120' | 16 | 25 | 47% |
| 13120-13128' | 12½ | 35 | 51% |
| 13128-13124' | 13½ | 55 | 38% |
| 13146-13151' | 14 | 40 | 43% |
| 13158-13180' | 12 | 35 | 53% |
| 13262-13272' | 11 | 30 | 63% |

Schlumberger

# DUAL INDUCTION-SFL
## WITH LINEAR CORRELATION LOG

COUNTY
FIELD
LOCATION
WELL
COMPANY

COMPANY Davis Oil Company

WELL Logan Federal #1

FIELD North Pineview

COUNTY Summit STATE Utah

LOCATION SENE

API SERIAL NO. 26 | TWP 3N | RANGE 7E

Other Services: LDT-CNL BHC-GR HDT

Permanent Datum: GL ; Elev.: 7300 est

Log Measured From KB 25 Ft. Above Perm. Datum

Drilling Measured From KB

Elev.: K.B. 7325 est D.F. 7324 G.L. 7300

| | | | | |
|---|---|---|---|---|
| Date | 7-24-82 | | | |
| Run No. | TWO | | | |
| Depth—Driller | 13492 | | | |
| Depth—Logger | 13490 | | | |
| Btm. Log Interval | 13484 | | | |
| Top Log Interval | 10690 | | | |
| Casing Driller | 9 5/8 11410 | @ | @ | @ |
| Casing Logger | 11407 | | | |
| Bit Size | 8 1/2 | | | |
| Type Fluid Hole | Lightly Dispersed | | | |
| Dens. / Visc. | 8.7 46 | | | |
| pH / Fluid Loss | 10.5 10.2 ml | ml | ml | ml |
| Source of Sample | Mud Tank | | | |
| Rm @ Meas. Temp. | 5.60 @ 74 F | @ F | @ F | @ F |
| Rmf @ Meas. Temp. | 4.84 @ 74 F | @ F | @ F | @ F |
| Rmc @ Meas. Temp. | 3.10 @ 74 F | @ F | @ F | @ F |
| Source: Rmf / Rmc | Meas Calc | | | |
| Rm @ BHT | 2.4 @ 184 F | @ F | @ F | @ F |
| TIME Circulation Stopped | 2100 (7-23) | | | |
| TIME Logger on Bottom | 0430 (7-24) | | | |
| Max. Rec. Temp. | 184 F | F | F | F |
| Equip. / Location | 8158 Evanston | | | |
| Recorded By | Johnson | | | |
| Witnessed By | Burber / Krug | | | |

The well name, location and borehole reference data were furnished by the customer.

FOLD HERE

SCALE CHANGES

| Type Log | Depth | Scale Up Hole | Scale Down Hole |
|---|---|---|---|
| | | | |

| | |
|---|---|
| Run No. | TWO |
| Service Order No. | 283010 |
| Fluid Level | Full |
| Salinity ppm. cl | 1500 |

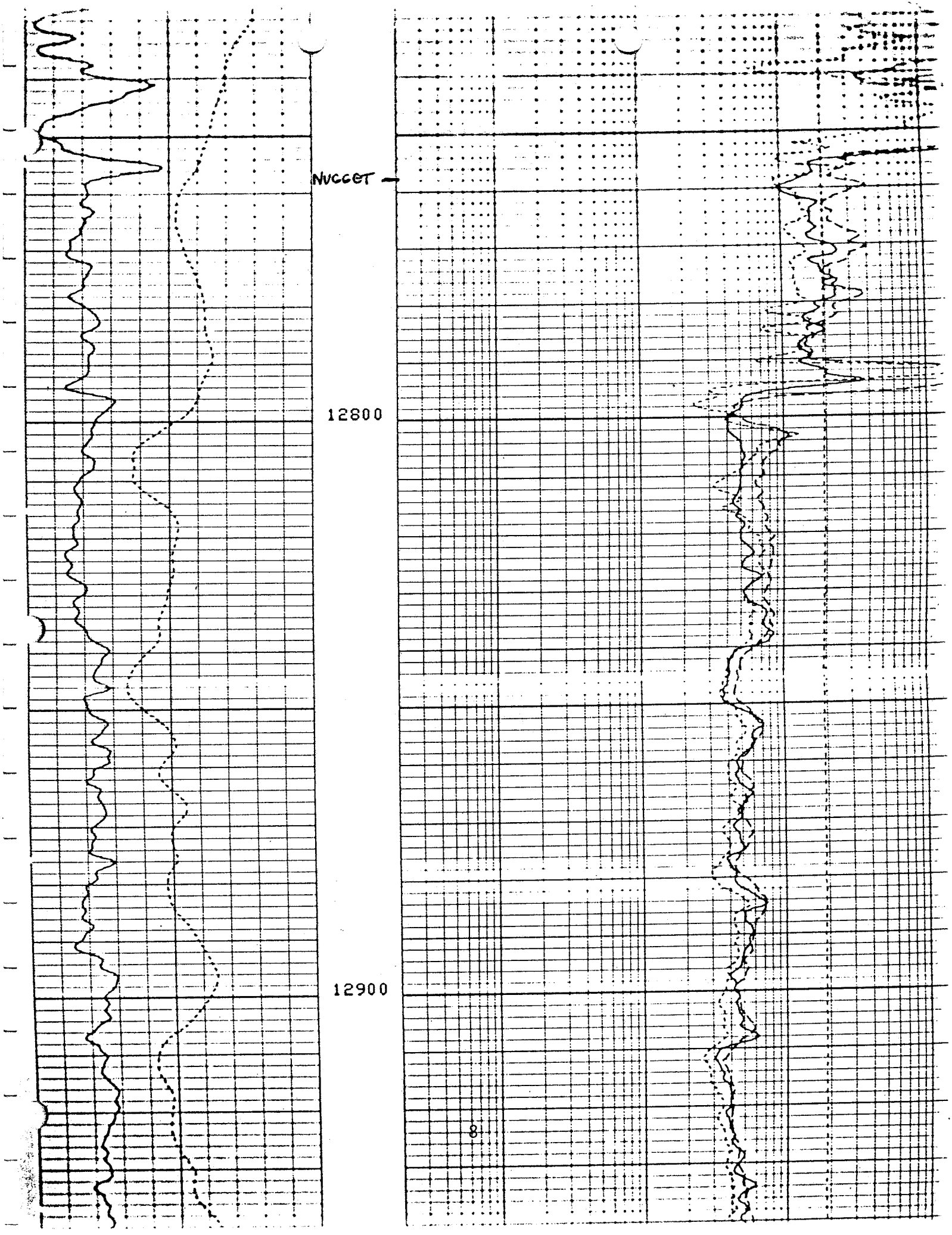
NUGGET
12800
12900

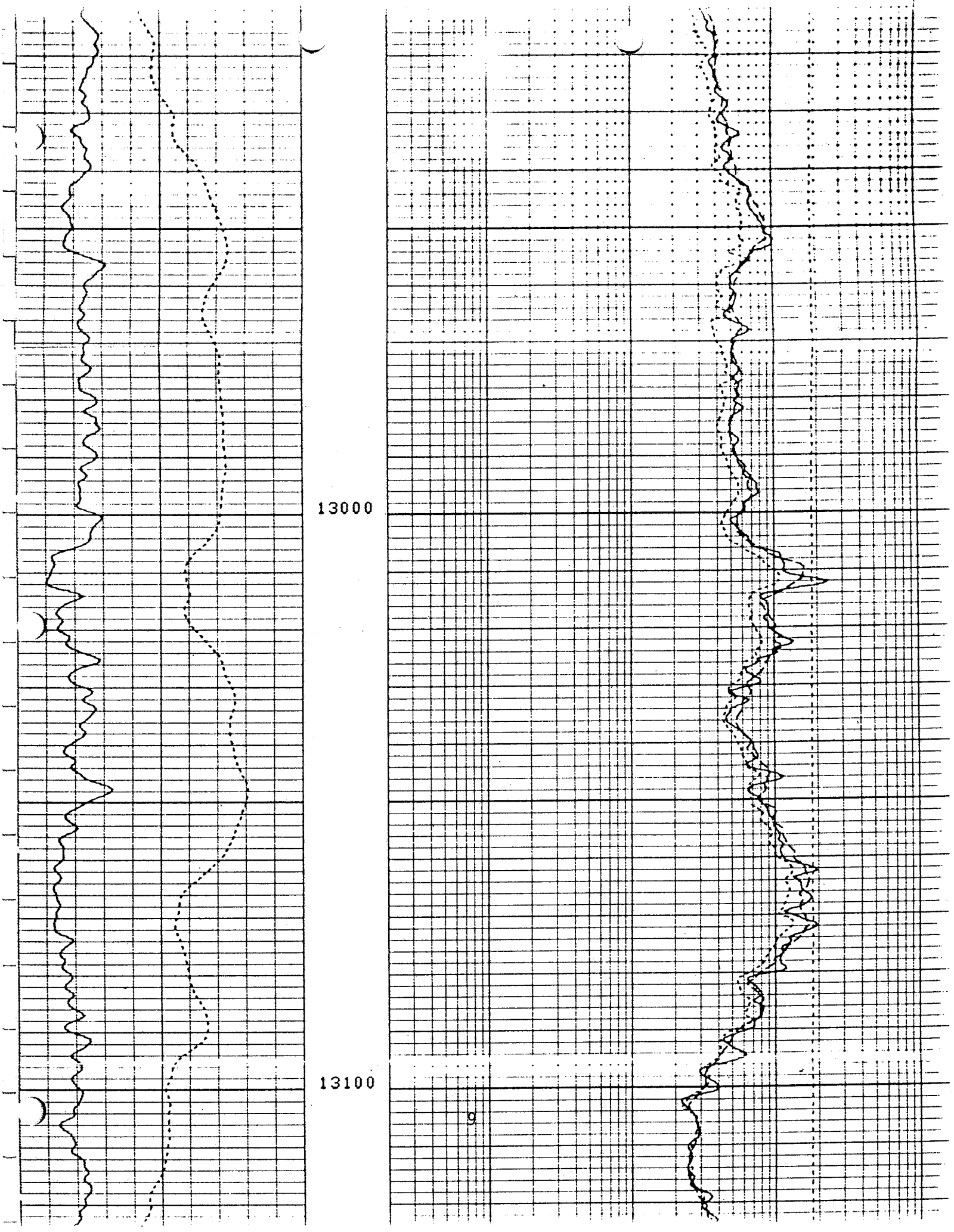
13000
13100

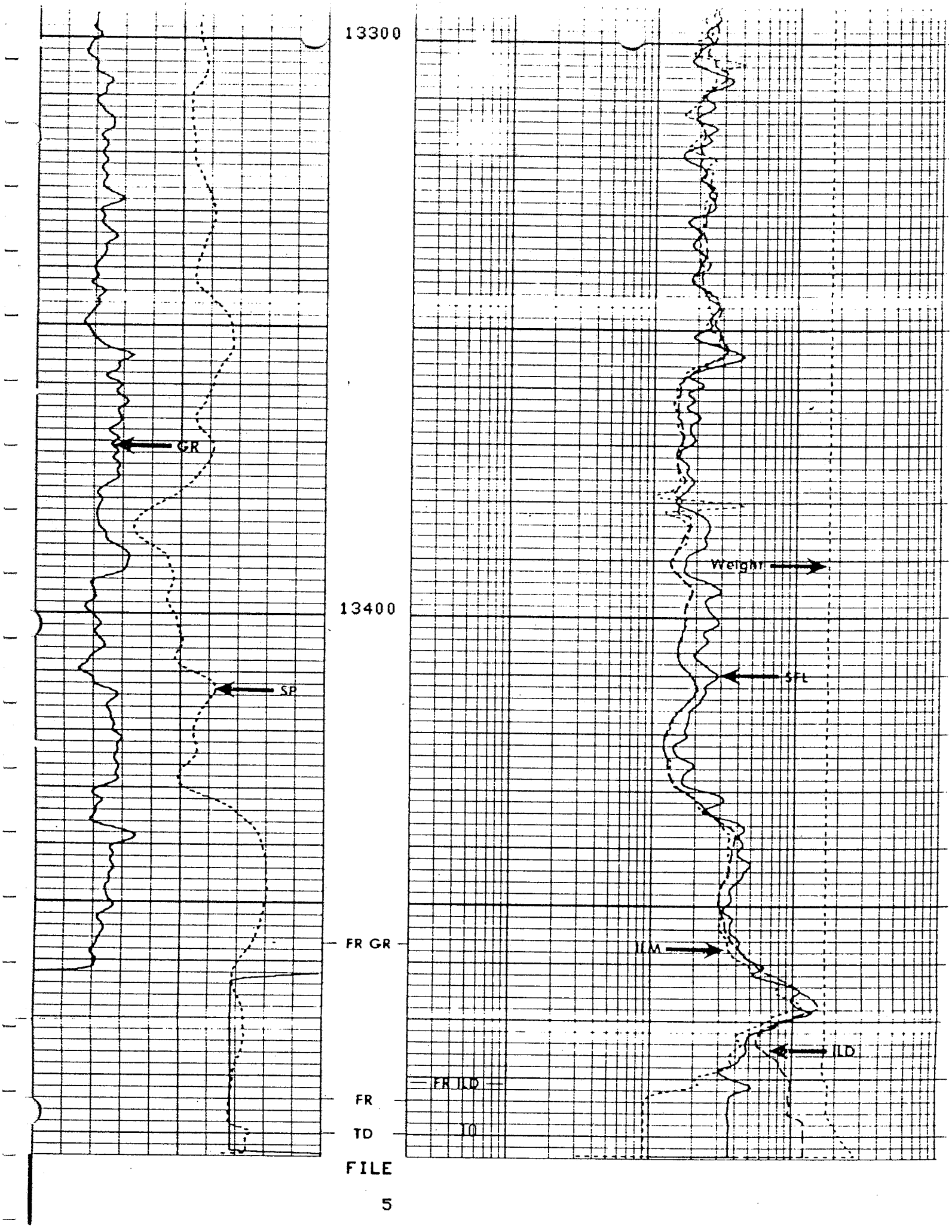
13300
13400
GR
SP
FR GR
FR
TD
FILE
Weight
SFL
ILM
ILD
FR ILD
10

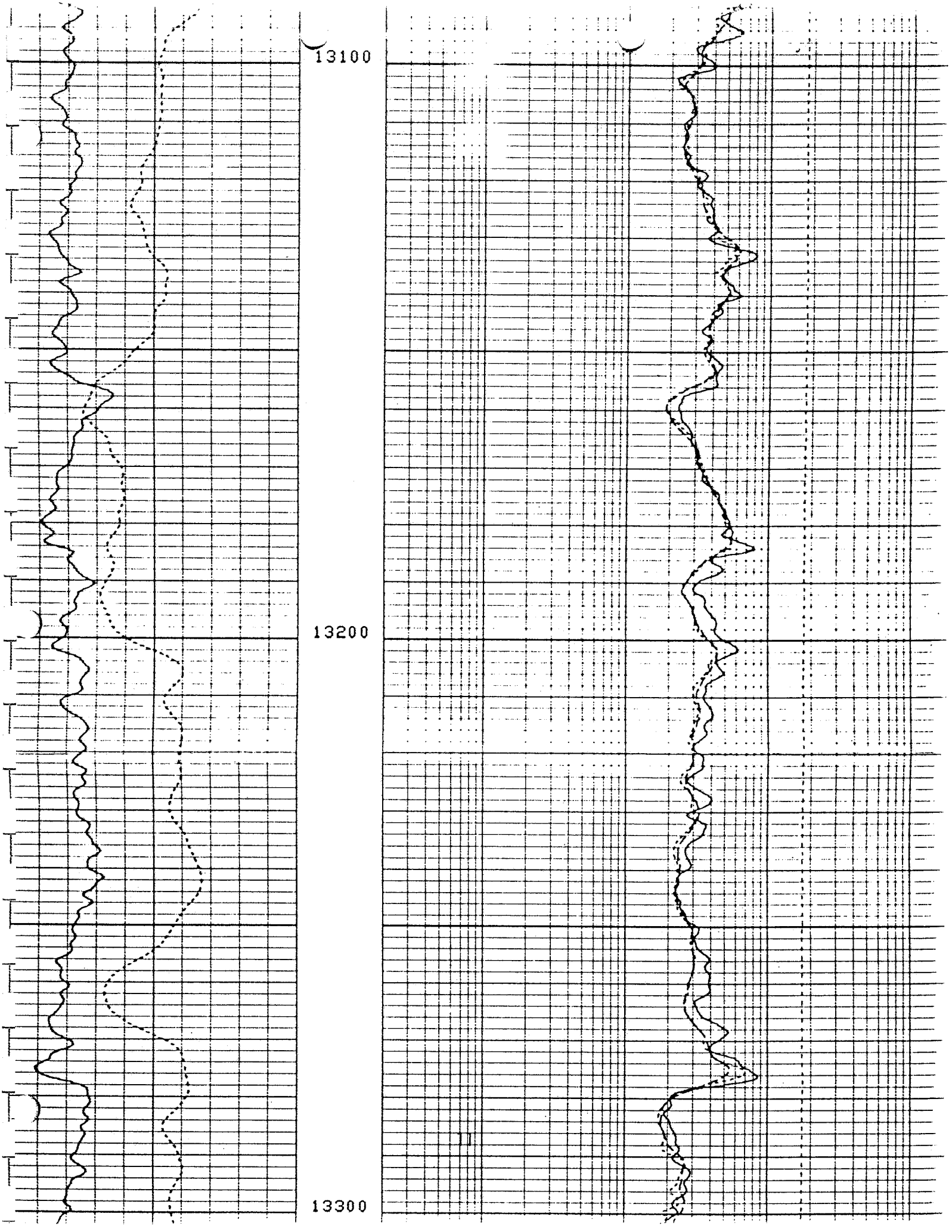
13100
13200
13300

## BIT RECORD

| NO. | MAKE | TYPE | SIZE | IN | OUT | FOOTAGE | HOURS |
|---|---|---|---|---|---|---|---|
| 1 | STC | DTJ | 17½" | | 311' | 244' | 32-3/4 |
| 2 | SEC | S4TJ | 17½" | 311' | 574' | 263' | 23½ |
| 3 | REED | Y13J | 17½" | 574' | 751' | 177' | 23½ |
| 4 | SEC | M4NJ | 17½" | 751' | 1,020' | 269' | 45½ |
| 5 | GRANT | Hole Opener | 26" | | | | |
| 6 | GRANT | " " | 26" | | | | |
| 7 | HTC | OSC3J | 17½" | 1,023' | 1,100' | 77' | 13 |
| 8 | HTC | X33 | 17½" | 1,100' | 2,081' | 981' | 91½ |
| 9 | SEC | S84 | 17½" | 2,081' | 3,018' | 951' | 87½ |
| 10 | HTC | M4M | 17½" | 3,018' | 3,138' | 117' | 15 |
| 11 | HTC | X33 | 17½" | 3,138' | 3,687' | 549' | 78¼ |
| 12 | HTC | OSC16J | 17½" | 3,687' | 3,816' | 129' | 17-3/4 |
| 13 | SEC | S88 | 17½" | 3,816' | 4,096' | 280' | |
| 14 | STC | 3JS | 17½" | 4,096' | 4,335' | 239' | 45 |
| 15 | HTC | X22 | 17½" | 4,335' | 4,903' | 568' | 55 |
| 16 | HTC | X22 | 17½" | 4,903' | 5,730' | 827' | 37 |
| 17 ) | | | | | | | |
| 18 ) | | | | | | | |
| 19 ) | Mills used while fishing for cones | | | | | | |
| 20 ) | | | | | | | |
| 21 ) | | | | | | | |
| 22 | REED | FP52 | 12¼" | 5,701' | 5,793' | 92' | 16¼ |
| 23 | HTC | J22 | 12¼" | 5,793' | 6,225' | 432' | 65 |
| 24 | STC | F-2 | 12¼" | 6,225' | 6,540' | 315' | 38½ |
| 25 | STC | F-2 | 12¼" | 6,540' | 6,949' | 409' | 69½ |
| 26 | HTC | J22 | 12¼" | 6,949' | 7,371' | 422' | 50½ |
| 27 | HTC | J22 | 12¼" | 7,371' | 7,665' | 294' | 41 |
| 28 | REED | H551 | 12¼" | 7,665' | 8,011' | 346' | 41 |
| 29 | STC | F-2 | 12¼" | 8,011' | 8,627' | 616' | 63 |
| 30 | STC | F-2 | 12¼" | 8,627' | 9,258' | 631' | 63 |
| 31 | STC | F-2 | 12¼" | 9,258' | 9,599' | 341' | 37¼ |
| 32 | HTC | J22 | 12¼" | 9,599' | 9,694' | 95' | 18½ |

BIT RECORD CONT'D

| | NO. | MAKE | TYPE | SIZE | IN | OUT | FOOTAGE | HOURS |
|---|---|---|---|---|---|---|---|---|
| | 33 | STC | F4 | 12¼" | 9,694' | 9,928' | 234' | 47 |
| | 34 | STC | F4 | 12¼" | 9,928' | 10,028' | 100' | 21 |
| | 35 | REED | FP53 | 12¼" | 10,028' | 10,385' | 357' | 55 |
| | 36 | STC | F-4 | 12¼" | 10,385' | 10,483' | 98' | 24 |
| | 37 | REED | FP62 | 12¼" | 10,483' | 10,614' | 131' | 38 |
| | 38 | REED | FP52 | 12¼" | 10,614' | 10,713' | 99' | 24½ |
| ashed out jet | 39 | SEC | S86F | 12¼" | 10,713' | 10,713' | 0 | 0 |
| | 40 | STC | F3 | 12¼" | 10,713' | 10,832' | 101' | 18½ |
| | 41 | SEC | M84F | 12¼" | 10,832' | 10,954' | 122' | 34 |
| | 42 | HTC | J55R | 12¼" | 10,954' | 11,038' | 84' | 31 |
| | 43 | SEC | M89TF | 12¼" | 11,038' | 11,219' | 181' | 50 |
| | 44 | STC | F4 | 12¼" | 11,219' | 11,261' | 42' | 21 |
| | 45 | SEC | S86F | 12¼" | 11,261' | 11,491' | 230' | |
| | 46 | SEC | M44N | 8½" | 11,495' | 11,648' | 153' | 15 |
| | 47 | SEC | S86F | 8½" | 11,648' | 12,111' | 461' | 55¼ |
| | 48 | SEC | S86F | 8½" | 12,111' | 12,473' | 362' | 52¼ |
| | 49 | STC | L4HJ | 8½" | 12,473' | 12,503' | 30' | 8 |
| RR | 48 | SEC | S86F | 8½" | 12,503' | 12,624' | 486' | 74 |
| Pinched | 50 | STC | F4 | 8½" | 12,624' | 12,695' | 71' | 16½ |
| | 51 | HTC | J55R | 8½" | 12,695' | 12,842' | 147' | 26¼ |
| | 52 | HTC | J55 | 8½" | 12,842' | 13,046' | 204' | 23 |
| | 53 | STC | F57 | 8½" | 13,046' | 13,082' | 36' | 6 |
| | 54 | SEC | H88F | 8½" | 13,082' | 13,210' | 128' | 16 |
| | 55 | STC | F7 | 8½" | 13,210' | 13,437' | 227' | 28¼ |
| | 56 | STC | F7 | 8½" | 13,437 | Cemented @ 13,568' | 131' | |

## DAILY DRILLING CHRONOLOGY

| | | |
|---|---|---|
| 12/20/81 | | Level derrick; mud up; rig up rotary tools spud @ 8:45 P.M.; drlg. |
| 12/21/81 | | Drlg. and survey; work on Pump #1; trip for lost pump pressure. |
| 12/22/81 | 286' drilled | Drlg. |
| 12/23/81 | 25' drilled | Trip out w/Bit #1; trip in w/Bit #2; drlg. and survey. |
| 12/24/81 | 225' drilled | Drlg. and survey; repair swivel packing; drlg. and survey; trip for Bit #2; trip in w/Bit #3; drlg. |
| 12/25/81 | 118' drilled | Drlg. and survey; repair rod oiler on pumps; drlg.; trip out w/Bit #3. |
| 12/26/81 | 107' drilled | Trip in w/Bit #4; drlg.; repair Crown-o-matic; drlg. |
| 12/27/81 | 149' drilled | Drlg. and survey; short trip 3 stands; drlg. and survey. |
| 12/28/81 | 110' drilled | Drlg.; hole completed to 1020'; trip to pick up hole opener Bit #5; ream out of hole; pick up new tongs. |
| 12/29/81 | 0' drilled | Finish trip; rig up new tongs; thaw Kelley and stand pipe; reaming w/Bit #5; trip out for stabilizers. |
| 12/30/81 | 0' drilled | Trip in; wash and ream to btm.; repair water pump and rod oilers; open hole and ream; trip out - change BHA; trip in - ream and open hole. |
| 12/31/81 | 0' drilled | Ream and open hole; trip out to change BHA. |
| 1/1/82 | 0' drilled | Make up new BHA; trip in w/Bit #6; ream and open hole. |
| 1/2/82 | 0' drilled | Ream and open hole; circulate and survey; pump hi-vis pill/sweep, circulate out; pump pill and trip out; repair air compressor; finish trip out; rig up csg. crew; run in 20" csg. |
| 1/3/82 | 0' drilled | Run in 20" csg.; rig down csg. crew; rig up cementers - run cement; wait on cement. |
| 1/4/82 | 0' drilled | Wait on cement; rough cut csg.; final cut csg.; weld csg. head; nipple up. |
| 1/5/82 | 0' drilled | Nipple up BOP's; nipple down and wait on new spacer spool; nipple up. |

## DAILY DRILLING CHRONOLOGY CONT'D

| | | |
|---|---|---|
| 1/6/82 | 0' drilled | Nipple up BOP's and test tools; test hydril to 2000 PSI; nipple up flow nipple; change flow line height; nipple up drlg. nipple; trip in w/Bit #7; lost air compressor. |
| 1/7/82 | 0' drilled | Repair air compressor; trip in hole to float; drill through float; wash through csg. and tag shoe; drill shoe; change out air compressor; drlg. 12¼" hole. |
| 1/8/82 | 77' drilled | Drop survey, pump pill; trip out; make up BHA; work on air compressor; trip in w/Bit #8; ream to btm.; drlg. |
| 1/9/82 | 190' drilled | Drlg. and survey; repair brake; drlg.; circulate and survey; trip out 5 stds.; repair wash pipe packing. |
| 1/10/82 | 159' drilled | Trip in hole; drlg. and survey; trip out for washout drop survey; trip in to csg. Cut drlg. line. |
| 1/11/82 | 130' drilled | Cut and slip drlg. line; trip in - RR Bit #8 drlg.; repair clutch; drlg. and survey. |
| 1/12/82 | 239' drilled | Drlg. and survey. |
| 1/13/82 | 241' drilled | Drlg. and survey; drop survey and trip out; magnaflux HWP and D.C.'s. |
| 1/14/82 | 26' drilled | Change BHA; trip in w/Bit #9; drlg. and survey. |
| 1/15/82 | 292' drilled | Drlg. and survey. |
| 1/16/82 | 260' drilled | Drlg. and survey. |
| 1/17/82 | 242' drilled | Drlg. and survey. |
| 1/18/82 | 129' drilled | Drlg. and survey; drop survey and trip out; change BHA; trip in w/Bit #10; drlg. |
| 1/19/82 | 110' drilled | Drlg.; drop survey and trip out; trip in w/Bit #11; drlg. and survey; install wear sub; drlg. |
| 1/20/82 | 151' drilled | Drlg. and survey. |
| 1/21/82 | 153' drilled | Drlg. and survey. |
| 1/22/82 | 176' drilled | Drlg. and survey. |
| 1/23/82 | 122' drilled | Trip in w/Bit #12; drlg.; drop survey and trip out. |
| 1/24/82 | 88' drilled | Change BHA; trip in to csg.; cut and slip drlg. line; trip in w/Bit #13; drlg. |
| 1/25/82 | 142' drilled | Drlg. and survey. |
| 1/26/82 | 157' drilled | Drlg. and survey; trip out; repair windwall; trip in hole w/Bit #14; drlg. |

## DAILY DRILLING CHRONOLOGY CONT'D

| | | |
|---|---|---|
| 1/27/82 | 25' drilled | Drlg.; trip out into csg.; work on light plant; inspect HWP and D.C.'s. |
| 1/28/82 | 0' drilled | Magnaflux D.C.'s; trip in and make up BHA; trip in. |
| 1/29/82 | 96' drilled | Trip in w/Bit #14 (rerun); drlg. and survey; repair rotary torque wheel; drlg. |
| 1/30/82 | 97' drilled | Drlg.; repair pump clutch; clean mud tanks; circulate; lost 500 bbls. new mud through arctic dump; build volume; drlg. |
| 1/31/82 | 20' drilled | Drlg.; repair pump; trip out for W.O. Lay down shock sub and Rmr.; trip in - no pump pressure; pump soft line - trip out; repair pump gauge on TOTCO; replace pump pressure gauge on standpipe; drlg. and survey. |
| 2/1/82 | 109' drilled | Drlg. and survey; repair pump clutch; drlg. and survey. |
| 2/2/82 | 240' drilled | Drlg. and survey. |
| 2/3/82 | 204' drilled | Drlg. and survey; circulate btms. up; drop survey and trip out; strap in hole w/Bit #16; wash and ream to btm.; drlg. |
| 2/4/82 | 115' drilled | Drlg.; repair wt. indicator; drlg. and work tight hole; drlg. and survey. |
| 2/5/82 | 176' drilled | Drlg. and work tight hole; drlg. and survey; work on TOTCO; drlg. |
| 2/6/82 | 221' drilled | Drlg.; trip out (work tight hole) trip in; ream 60' to btm.; drlg. |
| 2/7/82 | 98' drilled | Drlg. work tight hole; survey and drlg. |
| 2/8/82 | 205' drilled | Drlg.; circ. and trip out; parted pipe 44 stds. and single; screw into fish; work stuck pipe; trip out w/fish. |
| 2/9/82 | 27' drilled | Lay down bent D.P.; pick up fishing tools; trip in w/fishing tools (globe basket). |
| 2/10/82 | 0' drilled | Circulate out w/globe basket; run logs dil-sonic trip in w/BHA. |
| 2/11/82 | 0' drilled | Trip out; nipple down; run in 13-3/8" csg. (138 jts.); circulate csg. |
| 2/12/82 | 0' drilled | Circulate csg. Run in cement; wait on cement; cut csg. Lay down Kelly to be straightened; lay down collars. |
| 2/13/82 | 0' drilled | Nipple down; nipple up; run in hole to test BOP's. |
| 2/14/82 | 0' drilled | Nipple up BOP test tool; test choke line and choke house to 3500 PSI - OK.; pipe rams failed. |

DAILY DRILLING CHRONOLOGY CONT'D

| | | |
|---|---|---|
| 2/15/82 | 0' drilled | Pick up BHA; wait on BOP mechanic; work on BOP's. Test BOP's to 3500 PSI - OK; trip in; tag cement @ 5467' drlg. cement; test csg. and circulate. |
| 2/16/82 | 0' drilled | Circulate csg.; trip out to 2325; test csg. @ 2325 - OK. Trip out; pick up packer; run in to 5400 test csg. to 1000 PSI - OK. Held ½ hr.; trip out and lay down pkr.; pick up BHA and run in. Build mud volume; circ. cement; work on cones @ 5730. |
| 2/17/82 | 0' drilled | Trip out - rig repairs; run in w/magnet. Work magnet; pull out to clean magnet. Rec. 6 small pieces; run in hole w/magnet second run. Trip out - no recovery; trip in w/FBM. |
| 2/18/82 | 0' drilled | Run in w/mill; milling; trip out; lay down mill; pick up globe basket; top of fish 3' below csg. shoe; trip in; milling; trip out - lay down globe basket. |
| 2/19/82 | 0' drilled | Run in #2 w/globe basket; mill on cones; trip out w/bskt. - no recovery; run in hole w/flat mill; mill and beat on cones; nearly stuck pipe; pulled 30,000. |
| 2/20/82 | 0' drilled | Trip out; rec. 20 bearings in mill waterways; run in hole w/magnet No. 3; difficulty passing mill past shoe jt. @ 5683; work magnet; chain out; rec. 3 centralizer bow springs; run in hole w/globe basket; milling. |
| 2/21/82 | 0' drilled | Milling and beating w/globe basket; trip out w/mill; run in hole w/FBM; milling; trip out - rec. 7 roller brgs. and centralizer; knocked upper cone into hole; pick up poor boy jnk. basket. |
| 2/22/82 | 0' drilled | Trip in; work on rubber @ 5683' - work over fish; chain out; no recovery; run in w/FBM #4; mill on rubber (stabilizer?) |
| 2/23/82 | 0' drilled | Milling and beating w/FBM #4; trip out; rec. 19" cent. bow springs; trip in w/magnet #4 (strap in) rotate past 5683'; work magnet; chain out; rec. 4 pieces bow spring; rig up McCullough - run CCL - does not correlate to pipe tally. |
| 2/24/82 | 0' drilled | Run McCullough CBL/GR, CCL. Logs show csg. parted @ 5658'; (pipe tally shows 5686); pick up tapered mill; run in hole to tight spot @ 5683 - work tight spot; milling on junk; trip out - rec. broken centralizer; |

## DAILY DRILLING CHRONOLOGY CONT'D

| | | |
|---|---|---|
| 2/24/82 cont'd. | | 5 roller brgs., 1 cone; run in hole w/magnet and boot basket; magnet will not pass 5683. |
| 2/25/82 | 0' drilled | Try to work through tight spot; trip out; trip in w/tapered Mill #2; work on tight spot; mill on junk @ 5730; trip out; rec. 1/2 centralizer, roller ball; roller brgs., etc. |
| 2/26/82 | 0' drilled | Run in cavins junk catcher; work through 5683'; could not reach btm.; trip out; run McCullough GR/CCL tool will not pass 5676 (WL depth); spud to 5681 (WL) stuck tool 3 times; pick up 12" OD FBM; run in and work through 5683 mill on junk; trip out - rec. 1 ball roller - mill bald. Pick up junk catcher. Run in hole. |
| 2/27/82 | 0' drilled | Operate tool on btm; made 1 ft.; chain out - no rec. Run in hole w/tapered mill; milling and circ. |
| 2/28/82 | 0' drilled | Trip out - small recovery; pick up alignment tool w/EZ drill packer/poppit valve; push tool into hole first 100' - tool would not pass 317'; trip out; pckr. tension sleeve sheared - left alignment tool in hole. Run in hole w/spear; rec. 13½' of pckr. Fish for remaining pckr. section; pick up larger grapple. |
| 3/1/82 | 0' drilled | Run in hole w/spear and grapple; trip out - grapple missing; run in hole w/magnet; rec. grapple and 3 pckr. slips. |
| 3/2/82 | 0' drilled | Fishing for pckr. w/magnet; run petrolog CCL for depth correlation; pckr. at 5664. |
| 3/3/82 | 0' drilled | Tag pckr. @ 5664 - milled 2½'. |
| 3/4/82 | 0' drilled | Milling on fish; caught fish and work out of parted csg. - dropped twice; trip out - break out fish - trip in and spot 30 bbls. of water on btm.; trip out. |
| 3/5/82 | 0' drilled | Report missing. |
| 3/6/82 | 0' drilled | EZSV to btm. and sting out; sting in to EZSV and cement w/200 sacks of cement and squeeze; attempt to sting out; pulled 310,000 - work pipe and try to rotate @ free pt.; manually backed off - left 5 jts. of heavy wt. pipe; top of fish @ 5522; wait on cement. |
| 3/7/82 | 0' drilled | Trip out; run in hole w/new BHA; tag up @ 5508; wash to hard cement @ 5519; milling in cement and tool jt. Trip out w/bald flat mill; trip in w/BHA. |

## DAILY DRILLING CHRONOLOGY CONT'D

| | | |
|---|---|---|
| 3/8/82 | 0' drilled | Run in hole w/Burn Shoe #2; mill over tool jt.; washover HW from 5524-5590; run in hole to 5625 - no cement; repair pump clutch; mill on mid-section of HW - no progress; repair rig; trip out w/Burn Shoe #2; pick up new Burn Shoe #3 and 2 jts. wash pipe. Burn over pipe. |
| 3/9/82 | 0' drilled | Chain out w/Burn Shoe #3; pick up 2 jts. wash pipe; mill on center section of HW - cement below - 5626.6 (depth corrected to 5657.95). Lay down 6 singles; pressure test csg. to 1500 PSI - held 5 min. - OK. Trip out w/Burn Shoe #3; change out Burn Shoe; run in hole w/Burn Shoe #4; ream over fish to 5626.5 (corrected to 5657.95). |
| 3/10/82 | 0' drilled | Burn over fish to 5661.95; rig repairs; burn over fish to 5663; packer @ 5678; setting tool @ 5674.25; trip out; rotate wash pipe; replace burn shoe and trip in w/Shoe #5; wash over fish. |
| 3/11/82 | 0' drilled | Wash over fish 5441-5660; wash over to 5663; wash over to 5667.3; high torque while milling; pull 4 wet singles; slip drlg. line; run in hole; lay down all G pipe. |
| 3/12/82 | 0' drilled | Pick up "E" singles to tag fish; screw into fish - pull 30,000; back off; pick up single and torque pipe. Rig up petrolog - run free pt.; work through 5522; pick up spud assembly and spud to 5584; trip out; pick up poor boy core barrel and hit 5585; trip out - rec'd. crumbled cement; run in hole w/spud assembly to 5588; repair master clutch; manually backed off string w/3 turns; work torque down string; String Shot #1 - failed; #2 back off; trip out w/fish; recovered 2 jts. HW; make up new BHA. |
| 3/13/82 | 0' drilled | Clean V-door; run in hole w/Burn Shoe #6; washover fish from 5527-5667; mill on fish from 5667-5670.5; rig repair; mill on fish 5670.5-5671; rig repair; mill on fish 5671-5675.5; trip out. |
| 3/14/82 | 0' drilled | Trip out w/Burn Shoe #6; run in hole w/Burn Shoe #7; wash to btm.; lay down 2 bad jts.; mill to packer @ 5677; chain out and lay down Burn Shoe #7; make up BHA and run in hole w/jar assembly; screw into fish and jar 100,000#. |
| 3/15/82 | 0' drilled | Jar on fish; rig down kelly hose and gooseneck; wait on wireline truck; rig up wireline and wait on operator; sinker bar run to 5586'. String shot run - misfire; string shot #2 back off @ 5282; rig down loggers; POOH w/jars; make up new BHA & run in hole; rig up gooseneck, washover fish and work on packer. |

DAILY DRILLING CHRONOLOGY CONT'D

| | | |
|---|---|---|
| 3/16/82 | 0' drilled | Milling on packer w/Burn Shoe #8; replace rotary chain; mill over packer to 5685. Trip out. |
| 3/17/82 | 0' drilled | Run in hole w/Burn Shoe #9; repair pump clutch; wash and ream to 5686; recovered brass and rubber; stuck wash pipe on btm.; worked free w/torque; milling to 5688'; POOH; lay down all wash pipe; pick up jar assembly; run in hole to fish and screw in. |
| 3/18/82 | 0' drilled | POOH w/fish - lost fish; pick up 6-3/8" grapple; run in hole to engage fish; POOH - recovered 3 jts. HW and 44" EVSV pkr.; pick up wash pipe; lay down fish; washpipe thread protector fell in hole while making up tools. |
| 3/19/82 | 0' drilled | Washover fish and circulate mud sweeps to clean hole; tag fish @ 5678; mill to 5686; POOH w/bald mill; pick up boot basket; run in hole and mill on rubber; POOH. |
| 3/20/82 | 0' drilled | POOH w/wavy btm. mill; remove float valve; run in hole w/Mill #12; tag up @ 5678; mill to 5699; chain out; mill 90% worn; wait on mill and run in hole. |
| 3/21/82 | 0' drilled | Run in hole w/Mill Burn Shoe #13; tag up @ 5675½; mill to 5696.5; burn shoe wouldn't pass 5696½. Spudded on tool; POOH - first 36 stds. wet; pickup 10" overshot w/11-3/4" mill; run in hole and tag @ 5683; milled to 5691 - pulled on fish; trip out - 35 wet stds.; run in w/10" grapple. |
| 3/22/82 | 0' drilled | Run in hole w/#2 10" grapple; work over fish; would not pass 5683; work fish - COOH; no recovery; grapple turned upside down and broke in half; W.O. orders; P.U. 9-7/8" grapple and run in hole; work over fish; set at 5695; POOH; grapple broken - no fish; pick up burn shoe and auto. leaf grapple; run in hole. |
| 3/23/82 | 0' drilled | Tag fish @ 5684; slid shoe to 5695; worked grapple over fish; recovered 11'7" aluminum D.P.; rig up McCullough - run CBL/VDL/GR/CCL - VDL didn't work; rig down - lay down fishing tools; rig up new VDL; pick up Baker retainer and run in hole. |
| 3/24/82 | 0' drilled | Run in hole w/retainer; correlate CCL to March 24th CCL; rig down McCullough; pick up Baker stinger and run in hole; stab in to retainer; tested annulus to 1000 PSI - held OK; rig up dowell - squeeze to 2000 PSI; POOH; |

DAILY DRILLING CHRONOLOGY CONT'D

| | | |
|---|---|---|
| 3/24/82 cont'd | | repair rig; pick up BNA; run in hole; drill out cement retainer @ 5670; circulate well bore; POOH for concave mill; work on air compressor. |
| 3/25/82 | 0' drilled | Finish trip out; change out compressor; run in hole w/Concave Mill #1; tag up @ 5691.5; mill to 5697.5; mill quit drlg.; POOH. |
| 3/26/82 | 0' drilled | Finish trip out; wait on McCullough; rig up and run electronic csg. internal diameter log; tool would not pass 5656 WLD; spudded tool to 5656; POOH; log shows csg. wear from 5500-5656; adjust centralizers and rerun log; POOH; run CCL; stopped @ 5683 - spudded to 5695½. Poss. csg. parted 5684-5682; csg. worn from 5682-5504; pick up new BHA and concave mill (RR #1) tag up @ 5695 - mill to 5699. |
| 3/27/82 | 0' drilled | Mill 5699-5706; mill 5706-5710.5; POOH; pick up Concave Mill #2 and run in hole. |
| 3/28/82 | 0' drilled | Work mill @ 5683; mill will not pass; pick up taper mill and watermelon mill; run in hole and work mills @ 5683; tag tool @ 5708; mill 1 hour on align. tool; TOOH; pick up 8 bladed mill and BHA and run in hole. |
| 3/29/82 | 0' drilled | Run in hole; work 8-bladed mill @ 5683; will not pass; spudded - will not drill off. |
| 3/30/82 | 0' drilled | Report missing. |
| 4/1/82 | 0' drilled | Drill out cmt.; run CBL; pressure test csg. |
| 4/2/82 | 0' drilled | Run in hole and tag cement. |
| 4/3/82 | 0' drilled | Drlg. cement and washing down; circ. and run sweeps; run CBL - good bond; pick up csg. cutter and cut csg. |
| 4/4/82 | 0' drilled | Milling on csg.; POOH w/Mill #1; pick up #2 and run in hole; milling on csg. w/Cutter #2. |
| 4/5/82 | 0' drilled | Milling w/csg. Cutter #2; COOH; pick up cutter #3; run in hole; milling; TOOH w/#3; pick up Cutter #4 and run in hole. |
| 4/6/82 | 0' drilled | Milling w/Cutter #4. |
| 4/7-4/10/82 | 0' drilled | Cut window. |
| 4/10/82 | 0' drilled | Set cement plug. |
| 4/11/82 | 0' drilled | Wait on cement; drlg. cement top @ 5453. |
| 4/14/82 | 0' drilled | Drlg. and circ.; rig down wireline; chain out of hole; service rig; change BHA; trip in laydown 18 jts. Trip in w/Bit #21 sec. M44N 8-3/4"; try to unplug bit; trip out; |

## DAILY DRILLING CHRONOLOGY CONT'D

| | | |
|---|---|---|
| 4/14/82 cont'd | | pick up BHA and T.I.H.; break circ. and ream dyna drilled hole; drlg. |
| 4/15/82 | 0' drilled | Drlg. and circ.; survey - magnetic interference; drlg. 8-3/4" hole to 5700'. Trip out for hole opener; lay down 8-3/4" tools; pick up new BHA and trip in hole; break circ. and open hole. |
| 4/16/82 | 0' drilled | Open 12¼" hole; circ. and trip out to change BHA; trip in and open hole; service rig; open hole; trip out for hole opener; magnaflux D.C.'s; cut drlg. line. |
| 4/17/82 | 0' drilled | Pick up new BHA; trip in w/bullnose; ream and open hole; trip out; left 1½ cones on btm.; wait on magnet and make up BHA. Wait on fishing tools; T.I.H.; fish for cones; trip out w/chain; break down fishing tools; pick up BHA. |
| 4/18/82 | 0' drilled | Pick up BHA; trip in hole w/Bit #22. Ream and open hole above fish; circ. over fish; chain out; pick up boot basket and magnet; trip in; work magnet @ 5701; chain out w/ magnet; lay down fishing tools; retrieve cones; pick up BHA and T.I.H.; break circ. and drlg. |
| 4/19/82 | 27' drilled | Drlg. and survey; drop survey and trip for bit; lay down BHA; pick up BHA and trip in hole; ream tight hole @ 5669-5714; trip in. |
| 4/20/82 | 93' drilled | Ream 5714-5773; drlg. and survey; service rig; drlg. and survey. |
| 4/21/82 | 185' drilled | Circ. and survey; 2 misruns; drlg. and survey; circ. and trip out; RR Bit #23; T.I.H. |
| 4/22/82 | 83' drilled | Trip in w/Bit #23; drlg.; rig service; drlg. and survey (misrun); drlg. |
| 4/23/82 | 107' drilled | Drlg. and survey; drop survey and trip out; make up BHA and T.I.H.; break in bit; drlg. |
| 4/24/82 | 140' drilled | Drlg. and survey; re-tie geolograph line; drlg. |
| 4/25/82 | 147' drilled | Drlg. and survey; drop survey and trip out; dress bit and trip in; cut drlg. line; trip in; drlg. |
| 4/26/82 | 100' drilled | Drlg.; rig service; drlg. and survey; drlg. |
| 4/27/82 | 156' drilled | Drlg., rig service; rig up TOTCO RPM pulley; drlg. |

DAILY DRILLING CHRONOLOGY CONT'D

| | | |
|---|---|---|
| 4/28/82 | 125' drilled | Drlg. and survey; drill off test; drop survey and pump pill; T.O.O.H.; dress Bit #26 and run in hole. Pick up HW DP. |
| 4/29/82 | 96' drilled | Trip in hole; rearrange drill pipe rubbers. Break in bit; drlg. and survey; service rig; drlg. and survey. |
| 4/30/82 | 202' drilled | Drlg., service rig; circ. and survey; drlg. |
| 5/1/82 | 178' drilled | Drlg.; work out high torque; drlg.; circ. and drop survey; trip out; pick up BHA and bit; trip in hole; wash 30' to btm. - no fill; break in bit; drlg. |
| 5/2/82 | 96' drilled | Drlg. and survey; service rig; drlg. |
| 5/3/82 | 171' drilled | Drlg.; circ. and survey; (misrun); service rig; drlg.; circ. and pump sweep; drop survey and trip out; drag on BHA through sidetrack; pick up bit and BHA and trip in. |
| 5/4/82 | 54' drilled | Trip in; break circ. and ream 7596-7665; hit 24' fill; drlg. and survey; service rig; drlg. and survey (misrun). |
| 5/5/82 | 127' drilled | Drlg. and survey (misrun); service rig; drlg. and survey. |
| 5/6/82 | 145' drilled | Drlg. and survey; service rig; drop survey; trip out; inspect collars; lay down one cracked 9" DC; test BOP. |
| 5/7/82 | 46' drilled | Jet cellar; test BOP; set wear ring; pick up BHA; trip in; wash and ream 10' to bottom. |
| 5/8/82 | 147' drilled | Drlg.; circulate and survey; drlg. |
| 5/9/82 | 180' drilled | Short trip; wash and ream 8216 to 8370. |
| 5/10/82 | 200' drilled | Drlg.; short trip, 5 stds., wash and ream 8469 to 8531. |
| 5/11/82 | 102' drilled | Trip in hole; wash and ream 120' to bottom; drlg.; circulate and run survey; drlg. |
| 5/12/82 | 258' drilled | Drlg.; work tight hole @ 8891, drlg., short trip; drlg.; circulate and survey; drlg. |
| 5/13/82 | 220' drilled | Drlg.; circulate; trip out. |
| 5/14/82 | 123' drilled | Trip out; pull survey, change bit; trip in; break circulation; drlg.; break in bit; drlg.; service rig; jet cellar, short trip; circulate, trip in, wash and ream 8000' to 8071', tight hole. |
| 5/15/82 | 63' drilled | Wash and ream; trip in 3 stds.; tight hole; wash and ream; drlg. |

DAILY DRILLING CHRONOLOGY CONT'D

| | | |
|---|---|---|
| 5/16/82 | 212' drilled | Circ. to short trip; pull 20 stds.; (pulled tight). Trip in washing and reaming; 9537-9581; drlg.; circ. - trip out; change out BHA. |
| 5/17/82 | 74' drilled | Trip in w/Bit #32; wash and ream 120' to btm. (no fill); drlg. and survey; drlg. (high torque). |
| 5/18/82 | 96' drilled | Drlg.; trip for bit; change BHA; trip in washing and reaming; 25' fill; drlg. |
| 5/19/82 | 170' drilled | Drlg.; circ. and survey; rig service; drlg. |
| 5/20/82 | 57' drilled | Drlg.; circ. and drop survey; trip for bit; tight @ 6398-6776; trip out and change BHA; trip in; cut 100' drlg. line. |
| 5/21/82 | 39' drilled | Cut drlg. line; trip in; wash and ream 65' to btm. No fill - tight hole; drlg. and service pump. |
| 5/22/82 | 68' drilled | Drlg.; drop survey; work tight hole; repair wt. indicator and #2 pump clutch; trip out; change out IBS and 6 pt. Trip in; tight @ 9250, ream 9250-9772. |
| 5/23/82 | 32' drilled | Ream 9772-10028; drlg.; weld on mudline; drlg. |
| 5/24/82 | 139' drilled | Drlg.; short trip 10 stds.; ream and work on drum clutch. |
| 5/25/82 | 101' drilled | Repair drum clutch; ream; drlg.; weld on mud line; drlg. |
| 5/26/82 | 85' drilled | Drlg.; trip out and magnaflux DC's; inspect BHA; trip in; wash and ream 100' to btm.; no fill; drlg. |
| 5/27/82 | 80' drilled | Drlg.; drop survey and trip out. |
| 5/28/82 | 18' drilled | Finish trip out; cut drlg. line; W.O. magnet; Trip in w/magnet; repair airline to drum clutch; trip in and fish for bit junk; trip out; lay down magnet; trip in w/Bit #37; wash 60' to btm.; no fill; drlg. |
| 5/29/82 | 22' drilled | Drlg. |
| 5/30/82 | 94' drilled | Drlg.; trip for bit; trip in w/bit. |
| 5/31/82 | 26' drilled | Trip in w/Bit #38; wash and ream 90' to btm.; no fill; drlg.; service rig; drlg. |
| 6/1/82 | 89' drilled | Drlg.; lost PP; P.O.O.H; change out shock sub; trip in w/Bit #39; rig service; work junk basket; drlg.; lost PP; trip out. |
| 6/2/82 | 18' drilled | Trip out; lay down 2 9" DC's; trip in w/collars; cut drlg. line; trip in to 9460; ream tight hole; (9460-9630); trip for washout; relocate all D.P. rubbers. |

## DAILY DRILLING CHRONOLOGY CONT'D

| | | |
|---|---|---|
| 6/3/82 | 0' drilled | Trip out; lay down all 9" D.C.'s; lay down junk sub; inspect BHA; pick up new 9" D.C.'s; trip in to csg.; salt up mud system and circ. @ 5300; rig repair. |
| 6/4/82 | 0' drilled | Trip in w/Bit #40; ream 9450-10731; drlg.; high torque; ream; drlg. |
| 6/5/82 | 78' drilled | Drlg.; drop survey and trip out; work out tight hole; trip in w/Bit #41; change out 6 pt. reamer; cut drlg. line 100'; trip in. |
| 6/6/82 | 40' drilled | Fill pipe; ream 10' to btm.; no fill; break in bit; drlg.; weld on mudline; drlg. |
| 6/7/82 | 83' drilled | Drlg.; short trip 20 stds.; ream 70' to btm.; drlg., drop survey and trip out. |
| 6/8/82 | 29' drilled | Trip in w/Bit #42; wash and ream 35' to btm.; 5' fill; break in bit; drlg. |
| 6/9/82 | 70' drilled | Drlg.; trip for bit; trip in w/Bit #43; wash and ream 35' to bottom, 5' fill; drlg. |
| 6/10/82 | 39' drilled | Drlg.; chain out for washout; lay down washed out D.C.'s; replace shock sub; pick up BHA and T.I.H.; cut drlg. line 100'. Trip in; ream; drlg. |
| 6/11/82 | 40' drilled | Drlg.; rig service; drlg. |
| 6/12/82 | 94' drilled | Drlg.; trip for bit; check BOP's; dress bit; pick up BHA; trip in; wash and ream 25' - no fill; break in bit; drlg. |
| 6/13/82 | 57' drilled | Drlg.; short trip 62 stds.; circulate and build chlorides; trip for E-logs. |
| 6/14/82 | 15' drilled | Finish trip out; rig up Schlumberger; logging. |
| 6/15/82 | 0' drilled | Logging; rig down Schlumberger; pick up Bit #45; change out jars; trip in; wash and ream 50'; drlg.; circ. and salt saturate mud. |
| 6/16/82 | 87' drilled | Saturate mud; drlg.; ream tight hole @ 11290; drlg. lost 120 bbls. @ salt bottom (11322). |
| 6/17/82 | 120' drilled | Drlg. to 11491 (depth corr'c SLM 11495); circ. and trip to run csg. |
| 6/18/82 | 0' drilled | Prepare to run csg. @ 11495; cut drlg. line; rig up casers; run csg. |
| 6/19/82 | 0' drilled | Run csg.; circ. csg.; cement csg.; nipple down and cut csg. |
| 6/20/82 | 0' drilled | Nipple up and test BOP's; trip in and magnaflux DC's and HWDP. Inspect all BHA; drill deeper rat hole. |

DAILY DRILLING CHRONOLOGY CONT'D

| | | |
|---|---|---|
| 6/21/82 | 0' drilled | Finish drlg. rat hole; change out kelly; pick up BHA; trip and strap in; tag cement @ 11325-11333; drlg. float collar @ 11333. |
| 6/22/82 | 0' drilled | Drlg. cement to 11495; survey and clean tanks; change over to lightly dispersed mud; drlg.; trip out. |
| 6/23/82 | 153' drilled | Finish trip out; run CBL; top cement @ 8230; shoe @ 11410; pick up BHA; trip in hole; ream 30' to bottom; drlg. and survey (misrun). |
| 6/24/82 | 85' drilled | Drlg. and survey. |
| 6/25/82 | 204' drilled | Drlg. and survey. |
| 6/26/82 | 162' drilled | Drlg. (high torque); pump pill; drop survey; POOH; trip in - wash and ream 60' to bottom (8' fill); drlg. and survey - misrun. |
| 6/27/82 | 60' drilled | Drlg. and survey. |
| 6/28/82 | 161' drilled | Drlg.; run survey and circ. hole; wait on orders; POOH to shoe; ream to bottom; high torque; drlg. |
| 6/29/82 | 119' drilled | Drlg.; circ. and survey; circ. and trip out; RR Bit #48; repair drum; trip in - wash and ream to bottom - no fill; drlg. w/high torque. |
| 6/30/82 | 34' drilled | Run GR/CCL log; pick up watermelon mill; run in hole; ream 12010-12473; drlg. and survey (boundary ridge cvgs.) |
| 7/1/82 | 15' drilled | Drlg. and survey; POOH for bit; change BHA; cut drlg. line; run in hole. |
| 7/2/82 | 42' drilled | Drlg. and survey (misrun); drlg. and survey (misrun - high vis. mud); drlg. + condition mud; drlg. and ream for high torque. |
| 7/3/82 | 94' drilled | Short trip 5 stds.; work tight hole; short trip 14 stds.; service rig; trip in - stuck 6 times; trip out and change BHA; RIH; stuck @ 12595; work pipe; POOH. |
| 7/4/82 | 0' drilled | POOH; lay down IBS and 3 pt. RMR; RIH to shoe; repair rotary clutch; trip in to 12416; wash and ream; work tight hole to 12625; drlg. |
| 7/5/82 | 6' drilled | Drlg.; short trip 5 stds.; ream 22' fill; drlg. w/high torque; work pipe and pump high weight pill to make conn.; drlg.; short trip 5 stds.; ream to bottom; pump pill and drop survey; POOH. |
| 7/6/82 | 64' drilled | Drlg.; short trip 5 stds.; bridge @ 12599; wash to bottom; circ. and spot 10.0#/gal pill on btm.; drop survey; trip out; rig repair; |

DAILY DRILLING CHRONOLOGY CONT'D

| | | |
|---|---|---|
| 7/6/82 cont'd | | magnaflux D.C.'s; cut drlg. line; dress bit and pick up BHA; RIH; lay down 8 jts. to ream. |
| 7/7/82 | 0' drilled | Ream; drlg.; attempt short trip; drlg.; pump out 2 singles; ream; drlg. (70% cvgs.); circ. bottoms up. |
| 7/8/82 | 95' drilled | Circ. smples; short trip; reamed off btm.; drlg.; rig service; drlg.; pump pill and drop survey; short trip 15 stds. to retrieve survey; trip out for bit; lay down 3 pt.; pick up 6 pt.; RIH. |
| 7/9/82 | 52' drilled | Ream 4 jts. to btm.; drlg., pump pill and drop survey; pull out to shoe to retrieve survey; RIH; drlg. |
| 7/10/82 | 159' drilled | Drlg.; drop survey; trip 17 stds. and retrieve survey - misrun; trip out for bit; change out BHA; TIH; ream 12988-13046; drlg. |
| 7/11/82 | 72' drilled | Drlg.; drop survey; pull 17 stds. - could not retrieve; POOH and change BHA; cut drlg. line; trip in; ream and break in bit; drlg. |
| 7/12/82 | 63' drilled | Drlg. and survey - misrun; drlg. and resurvey - misrun; drlg. w/high torque; trip out; change bit; RIH. |
| 7/13/82 | 74' drilled | Drlg.; lost PP; drop survey and COOH; shock sub washed out; monel bent; cut drlg. line; service rig; wait on new monel; RIH; wash and ream 75'; drlg.; lost approx. 210 bbls. mud. |
| 7/14/82 | 51' drilled | Drlg.; losing mud (approx. 330 bbls.); survey; drlg.; lost 100 bbls.; trip out. |
| 7/15/82 | 176' drilled | POOH; pick up new BHA; RIH; break in bit and ream to btm.; drlg., stuck for 1½ hrs. @ 13472'; ream; lost 500 bbls. mud. |
| 7/16/82 | 41' drilled | Drlg.; occasional torque; stuck pipe @ 13568; worked up 15'; will not move up or down. |
| 7/17/82 | 0' drilled | Working stuck pipe. |
| 7/18/82 | 0' drilled | Attempt to fire jars; pump 20 bbls. across BHA; work torque down pipe; jars will not fire; pump diesel to 11868; circ. and work pipe; spot 20 bbls. "free pipe" across BHA; rig up VACCO - run free pt.; free at 12574; stuck @ 12583; rig down wireline - jars work; jar and work pipe every 30 min. |
| 7/19/82 | 0' drilled | VACCO free pt. tool failed; release VACCO; circ. hole and jar pipe; rig up McCullough; fire nozzle charge to bust jets; run free pt.; free @ 12380; stuck in HW pipe; rig up Kelly |

DAILY DRILLING CHRONOLOGY CONT'D

| | | |
|---|---|---|
| 7/19/82 cont'd | | and work jars; POOH; run string shot to 1 collar below jars; fired twice; backed off; recovered 9 HW, 3 DC's; lay down fish and pick up fishing tools. |
| 7/20/82 | 0' drilled | Pick up BHA; cut drlg. line; RIH 22 stds.; rig up gooseneck; pump 300 bbls. fresh water into annulus; valve open; water went down D.P.; pump out pill; condition mud in hole; trip in and tag fish @ 12968; screw in - jar fish and circ. hole; rig up NOWSCO; pressure test to 3000 PSI.; mix Black Magic pill; displace pill; chase w/mud; pump $N_2$ Stage 1; displace 54 bbls. mud w/$N_2$; jar 1/4 hr.; no movement; displace w/$N_2$ - Stage 2. |
| 7/21/82 | 0' drilled | Continue displace w/$N_2$; jar after each displacement; rig up McCullough; run free pt.; free to second collar; pump $N_2$; max. pressure 2750; bled back to 2450; flowed for 15 sec. Recovered total of 123 bbls. mud; blow down $N_2$; rig down NOWSCO; jar on fish; rig up for free pt.; free @ 13525; rig up for string shot; fired twice in spiral above monel. |
| 7/22/82 | 0' drilled | Run back off shot to crows ft. and attempt back off @ 13526; did not back off; attempt @ 13498; POOH tightening loose drill string; worked through tight spot @ 12400; recovered fish; pick up BHA and RIH. |
| 7/23/82 | 0' drilled | Run in hole; circ. csg. to cond. mud; tag btm. @ 13492.5 6' fill washed down; tight @ 13124; circ. gas cut mud; condition hole; POOH 22 stds.; RIH and circ.; chain out; wait on Schlumberger; rig up and begin logging. T.D. 13492 driller's depth. |
| 7/24/82 | 0' drilled | Running E-logs. T.D. Schlumberger 13487. |
| 7/25/82 | 0' drilled | Finish E-logs; geologist released. |

## MUD RECORD

| DATE | DEPTH | WT | F.VIS. | PH | FILTR. | CK | CHLOR. | SD | SOLIDS | CAL | PV | YP |
|---|---|---|---|---|---|---|---|---|---|---|---|---|
| 1/20 | Spud | | | | | | | | | | | |
| 1/21 | Spud | 8.7 | 32 | 9.5 | 42 | 3 | 700 | | 2.5 | | | |
| 1/22 | 270 | 8.8 | 36 | 9.5 | 26 | 3 | 700 | | 3.2 | | | |
| 1/23 | 382 | 8.9 | 51 | 9.0 | 39 | 3 | 800 | | 4.7 | | | |
| 1/24 | 575 | 9.2 | 35 | 9.0 | 29 | 2 | 1000 | | 6.1 | | | |
| 1/25 | 674 | 9.2 | 37 | 9.0 | 31 | 3 | 900 | | 6.0 | | | |
| 1/26 | 842 | 9.1 | 38 | 10.0 | 19 | 3 | 600 | | 5.6 | | | |
| 1/27 | 919 | 9.2 | 37 | 9.0 | 20 | 2 | 700 | | 6.3 | | | |
| 1/28 | Ream hole to 26" @ 1023 Run 20" @ 1008 Nippling up | | | | | | | | | | | |
| 1/5 | 1023 | 9.4 | 42 | 9.0 | 11.8 | 2 | 6700 | | 7.7 | 40 | 14 | 8 |
| 1/6 | Nipple up and test hydril | | | | | | | | | | | |
| 1/7 | Tag cement @ 922 Drill out float and shoe | | | | | | | | | | | |
| 1/8 | No report | | | | | | | | | | | |
| 1/9 | 1302 | 9.05 | 38 | 9.0 | 8.9 | 2 | 700 | ¼ | 4.8 | 50 | 11 | 7 |
| 1/10 | 1481 | 9.25 | 39 | 10.0 | 10.2 | 2 | 1000 | ¼ | 6.1 | 100 | 12 | 6 |
| 1/11 | No report | | | | | | | | | | | |
| 1/12 | 1859 | 9.65 | 41 | 10.0 | 7.9 | 2 | 1000 | ¼ | 9.1 | 100 | 15 | 9 |
| 1/13 | 2067 | 9.8 | 41 | 9.5 | 7.8 | 2 | 1100 | ½ | 10.1 | 100 | 15 | 7 |
| 1/14 | 2198 | 9.65 | 37 | 9.5 | 8.0 | 2 | 900 | ¼ | 9.2 | 100 | 11 | 4 |
| 1/15 | 2457 | 9.7 | 35 | 10.0 | 9.7 | 2 | 1200 | ¼ | 9.8 | 40 | 10 | 5 |
| 1/16 | 2713 | 9.65 | 35 | 10.0 | 9.7 | 2 | 1200 | ¼ | 9.5 | 40 | 12 | 3 |
| 1/17 | 2961 | 9.45 | 40 | 10.0 | 8.3 | 2 | 900 | ¼ | 8.4 | 40 | 13 | 10 |
| 1/18 | 3101 | 9.65 | 35 | 8.5 | 10.4 | 2 | 850 | ¼ | 9.7 | tr | 11 | 4 |
| 1/19 | 3177 | 9.65 | 41 | 9.5 | 8.2 | 2 | 1100 | ¼ | 9.1 | 50 | 14 | 9 |
| 1/20 | 3357 | 9.65 | 40 | 10.0 | 8.5 | 2 | 1000 | ¼ | 9.6 | 40 | 14 | 6 |
| 1/21 | 3520 | 9.5 | 42 | 10.0 | 9.3 | 2 | 1000 | tr | 8.3 | 50 | 15 | 7 |
| 1/22 | 3675 | 9.4 | 40 | 10.0 | 9.2 | 2 | 1100 | .125 | 7.6 | 60 | 14 | 6 |
| 1/23 | 3793 | 9.45 | 42 | 10.0 | 8.4 | 2 | 1100 | tr | 7.7 | 60 | 15 | 9 |
| 1/24 | 3865 | 9.3+ | 41 | 10.0 | 8.4 | 2 | 1000 | tr | 7.4 | 80 | 14 | 9 |
| 1/25 | 4018 | 9.5 | 45 | 10.0 | 8.5 | 2 | 1000 | ¼ | 8.4 | 80 | 17 | 17 |
| 1/26 | 4097 | 9.5 | 41 | 10.0 | 8.6 | 2 | 1000 | .125 | 8.4 | 120 | 12 | 9 |
| 1/27 | 4122 | 9.7 | 46 | 9.0 | 8.2 | 2 | 700 | ¼ | 10.1 | 120 | 18 | 9 |
| 1/28 | 4122 | 9.4 | 41 | 8.0 | 9.2 | 2 | 600 | tr | 7.4 | 80 | 16 | 7 |
| 1/29 | 4217 | 9.6 | 41 | 9.0 | 7.5 | 2 | 800 | tr | 8.8 | --- | 15 | 6 |

MUD RECORD CONT'D

| DATE | DEPTH | WT | F.VIS. | PH | FILTR. | CK | CHLOR. | SD | SOLIDS | CAL | PV | YP |
|---|---|---|---|---|---|---|---|---|---|---|---|---|
| 1/30/82 | 4323 | 9.6 | 42 | 9.0 | 7.9 | 2 | 900 | tr | 8.8 | 80 | | 11 |
| 1/31 | 4335 | 9.2 | 37 | 9.0 | 8.6 | 2 | 800 | tr | 6.0 | 80 | 13 | 4 |
| 2/1 | 4530 | 9.4 | 42 | 10.1 | 8.0 | 2 | 850 | .2 | 7.9 | 80 | 17 | 10 |
| 2/2 | 4755 | 9.4 | 43 | 9.6 | 7.7 | 2 | 800 | .3 | 7.8 | 70 | 19 | 15 |
| 2/3 | 4896 | 9.35 | 44 | 10.0 | 8.0 | 2 | 800 | .2 | 7.5 | 70 | 19 | 12 |
| 2/4 | 5050 | 9.3 | 41 | 10.0 | 8.4 | 2 | 800 | .2 | 6.9 | 60 | 16 | 8 |
| 2/5 | No report | | | | | | | | | | | |
| 2/6 | 5399 | 9.35 | 48 | 10.5 | 8.5 | 2 | 900 | .25 | 6.9 | 60 | 17 | 21 |
| 2/7 | 5611 | 9.3 | 39 | 10.0 | 8.2 | 2 | 800 | tr | 7.1 | - | 12 | 5 |
| 2/8 | Reports not taken while fishing 2/8 - 4/15/82 | | | | | | | | | | | |
| 4/15 | 5670 | 8.7 | 42 | 10.0 | 14.1 | 2 | 950 | .25 | 2.5 | tr | 11 | 6 |
| 4/16 | 5700 | 8.7 | 45 | 11.0 | 11.2 | 2 | 850 | .25 | 2.5 | tr | 13 | 9 |
| 4/17 | 5679 | 8.7 | 39 | 11.0 | 10.6 | 2 | 700 | .25 | 2.5 | 20 | 10 | 7 |
| 4/18 | 5703 | 8.7 | 42 | 10.5 | 10.4 | 2 | 700 | .20 | 2.5 | tr | 10 | 9 |
| 4/19 | 5768 | 8.7 | 41 | 10.5 | 9.8 | 2 | 700 | .20 | 2.5 | tr | 10 | 8 |
| 4/20 | 5915 | 8.7 | 44 | 10.0 | 9.3 | 2 | 800 | .20 | 2.7 | 20 | 13 | 8 |
| 4/21 | 6081 | 8.8+ | 44 | 10.5 | 8.6 | 2 | 700 | .25 | 3.6 | 40 | 13 | 10 |
| 4/22 | 6169 | 8.7+ | 43 | 10.5 | 9.3 | 2 | 800 | .20 | 3.0 | 20 | 14 | 6 |
| 4/23 | 6224 | 8.7 | 45 | 10.5 | 8.1 | 2 | 700 | .25 | 2.6 | 20 | 14 | 9 |
| 4/24 | 6370 | 8.7+ | 43 | 10.0 | 8.4 | 2 | 800 | .25 | 2.9 | 60 | 14 | 11 |
| 4/25 | 6524 | 8.7+ | 44 | 10.0 | 7.8 | 2 | 900 | .25 | 3.1 | 40 | 13 | 10 |
| 4/26 | 6695 | 8.6 | 50 | 10.5 | 7.7 | 2 | 900 | .25 | 2.2 | 40 | 20 | 15 |
| 4/27 | 6824 | 8.7+ | 46 | 10.0 | 8.0 | 2 | 900 | tr | 3.2 | 20 | 14 | 11 |
| 4/28 | 6918 | 8.7+ | 51 | 10.5 | 8.2 | 2 | 1000 | tr | 3.5 | 40 | 17 | 10 |
| 4/29 | 7008 | 8.8 | 45 | 10.5 | 8.3 | 2 | 1000 | .25 | 3.5 | 40 | 17 | 9 |
| 4/30 | 7197 | 8.8 | 44 | 10.5 | 8.6 | 2 | 900 | .20 | 3.2 | 40 | 15 | 10 |
| 5/1 | 7372 | 8.8 | 44 | 10.5 | 8.7 | 2 | 750 | .20 | 3.7 | 40 | 15 | 10 |
| 5/2 | 7474 | 8.8+ | 43 | 10.5 | 8.2 | 2 | 800 | .20 | 4.2 | 40 | 14 | 8 |
| 5/3 | 7640 | 8.9 | 44 | 10.5 | 8.0 | 2 | 850 | .20 | 4.3 | 40 | 16 | 9 |
| 5/4 | 7693 | 8.9 | 41 | 9.5 | 8.5 | 2 | 900 | tr | 4.3 | 40 | 12 | 8 |
| 5/5 | 7817 | 8.7+ | 43 | 10.0 | 8.7 | 2 | 900 | tr | 3.4 | 40 | 14 | 8 |
| 5/6 | 7968 | 8.7+ | 41 | 10.0 | 8.1 | 2 | 1000 | | 3.4 | 60 | 13 | 8 |
| 5/7 | 8011 | 8.7+ | 43 | 10.0 | 8.2 | 2 | 1000 | | 3.4 | 60 | 14 | 8 |
| 5/8 | 8158 | 8.7 | 53 | 10.5 | 7.9 | 2 | 1000 | | 3.3 | 80 | 15 | 10 |

MUD RECORD CONT'D

| DATE | DEPTH | WT | F.VIS. | PH | FILTR. | CK | CHLOR. | SD | SOLIDS | CAL | PV | YP |
|---|---|---|---|---|---|---|---|---|---|---|---|---|
| 5/9/82 | 8358 | 8.8 | 45 | 10.0 | 9.7 | 2 | 1000 | | 3.6 | 80 | 13 | 8 |
| 5/10 | 8373 | 8.8 | 42 | 10.0 | 9.0 | 2 | 900 | | 3.7 | 80 | 14 | 8 |
| 5/11 | 8639 | 8.8 | 41 | 10.0 | 8.0 | 2 | 1000 | | 3.8 | 100 | 11 | 7 |
| 5/12 | 8866 | 8.8 | 41 | 10.0 | 8.3 | 2 | 1000 | | 3.6 | 80 | 13 | 6 |
| 5/13 | 9097 | 8.8 | 43 | 10.0 | 8.2 | 2 | 1000 | | 3.6 | 60 | 13 | 7 |
| 5/14 | 9212 | 8.8 | 47 | 10.0 | 8.3 | 2 | 1000 | | 3.6 | 60 | 13 | 10 |
| 5/15 | 9282 | 8.9 | 48 | 10.0 | 9.8 | 2 | 1200 | .125 | 4.3 | 80 | 15 | 9 |
| 5/16 | 9397 | 8.8 | 51 | 10.0 | 8.0 | 2 | 1200 | .125 | 3.5 | 60 | 13 | 9 |
| 5/17 | 9671 | 8.8 | 46 | 10.5 | 10.0 | 2 | 1000 | .10 | 3.8 | 60 | 14 | 10 |
| 5/18 | 9713 | 8.8 | 43 | 10.5 | 10.1 | 2 | 1000 | .10 | 3.8 | 60 | 14 | 7 |
| 5/19 | 9881 | 8.8 | 42 | 10.5 | 10.0 | 2 | 1000 | .10 | 3.8 | 80 | 13 | 7 |
| 5/20 | 9922 | 8.7+ | 43 | 10.5 | 10.0 | 2 | 1000 | .10 | 3.4 | 70 | 13 | 10 |
| 5/21 | 10024 | 8.7+ | 45 | 10.0 | 10.1 | 2 | 1000 | tr | 3.4 | 80 | 12 | 6 |
| 5/22 | 10028 | 8.8 | 39 | 9.5 | 10.2 | 2 | 1100 | .20 | 3.8 | 80 | 10 | 5 |
| 5/23 | 10111 | 8.8 | 46 | 10.5 | 11.3 | 2 | 1000 | tr | 3.7 | 100 | 11 | 8 |
| 5/24 | 10202 | 8.8 | 40 | 10.0 | 10.4 | 2 | 1000 | tr | 3.6 | 80 | 12 | 5 |
| 5/25 | 10343 | 8.7 | 42 | 10.0 | 10.0 | 2 | 1200 | tr | 3.0 | 100 | 13 | 9 |
| 5/26 | 10386 | 8.9 | 44 | 9.5 | 8.4 | 2 | 1300 | tr | 4.3 | 120 | 14 | 8 |
| 5/27 | 10464 | 8.8+ | 50 | 10.0 | 8.4 | 2 | 1200 | tr | 4.2 | 120 | 13 | 9 |
| 5/28 | 10483 | 8.8+ | 41 | 9.5 | 8.3 | 2 | 1200 | .20 | 4.3 | 160 | 15 | 5 |
| 5/29 | 10514 | 8.8 | 38 | 10.0 | 8.2 | 2 | 1300 | tr | 4.3 | 160 | 9 | 4 |
| 5/30 | 10604 | 8.8 | 43 | 10.0 | 8.8 | 2 | 1100 | tr | 3.7 | 160 | 10 | 5 |
| 5/31 | 10633 | 8.8 | 38 | 10.0 | 8.4 | 2 | 1100 | tr | 3.7 | 160 | 10 | 4 |
| 6/1 | 10713 | No mud report | | | | | | | | | | |
| 6/2 | 10727 | 8.9 | 39 | 9.0 | 10.2 | 2 | 1100 | tr | 4.3 | 120 | 10 | 5 |
| 6/3 | 10731 | No mud report while salting up. | | | | | | | | | | |
| 6/4 | 10731 | No mud report while salting up. | | | | | | | | | | |
| 6/5 | 10843 | 9.1 | 52 | 10.0 | 21 | 3 | 63K | tr | 2.2 | 160 | 11 | 28 |
| 6/6 | 10930 | 9.2 | 42 | 11.0 | 17.2 | 2 | 71K | .10 | 2.5 | 160 | 10 | 19 |
| 6/7 | 10959 | 9.2 | 42 | 11.0 | 15.2 | 2 | 79K | .10 | 2.0 | 160 | 11 | 18 |
| 6/8 | 10994 | 9.1 | 42 | 10.5 | 15.8 | 2 | 71K | tr | 1.8 | 160 | 11 | 10 |
| 6/9 | 11030 | 9.2+ | 40 | 10.5 | 12.4 | 2 | 80K | .10 | 2.2 | 160 | 11 | 10 |
| 6/10 | 11070 | 9.3 | 40 | 10.5 | 12.1 | 2 | 78K | tr | 2.8 | 160 | 10 | 10 |
| 6/11 | 11113 | 9.5 | 37 | 10.5 | 12.0 | 2 | 85K | .10 | 3.7 | 160 | 9 | 8 |

MUD RECORD CONT'D

| DATE | DEPTH | WT | F.VIS. | PH | FILTR. | CK | CHLOR. | SD | SOLIDS | CAL | PV | YP |
|---|---|---|---|---|---|---|---|---|---|---|---|---|
| 6/12 | 11206 | 9.5 | 37 | 11.0 | 12.0 | 2 | 85K | .10 | 3.7 | 180 | 9 | 7 |
| 6/13 | 11235 | 9.4 | 41 | 10.5 | 12.6 | 2 | 89K | tr | 2.8 | 180 | 11 | 8 |
| 6/14 | 11261 | 9.5 | 40 | 11.0 | 13.6 | 2 | 102K | .10 | 2.8 | 180 | 11 | 9 |
| 6/15 | 11261 | No report while logging. | | | | | | | | | | |
| 6/16 | 11341 | 10.3 | 45 | 10.0 | 18.6 | 2 | 183K | .10 | 3.2 | 200 | 13 | 10 |
| 6/17 | 11468 | 10.2+ | 40 | 11.0 | 18.2 | 2 | 171K | tr | 4.1 | 180 | 8 | 5 |
| 6/18 | ) | | | | | | | | | | | |
| 6/19 | ) | No mud reports | | | | | | | | | | |
| 6/20 | ) | | | | | | | | | | | |
| 6/21 | ) | | | | | | | | | | | |
| 6/22 | 11600 | 8.5 | 39 | 8.0 | 19.8 | 2 | 5500 | tr | 1.8 | 140 | 7 | 10 |
| 6/23 | 11671 | 8.5+ | 67 | 9.0 | 15.5 | 2 | 4500 | tr | 1.7 | 60 | 13 | 14 |
| 6/24 | 11878 | 8.6 | 49 | 9.0 | 11.8 | 2 | 5000 | tr | 1.8 | 80 | 11 | 13 |
| 6/25 | 11949 | 8.6 | 58 | 9.0 | 9.3 | 2 | 5000 | tr | 1.8 | 80 | 13 | 14 |
| 6/26 | 12109 | 8.7 | 53 | 8.5 | 9.1 | 1 | 4500 | tr | 2.4 | | 17 | 13 |
| 6/27 | 12183 | 8.7 | 47 | 9.0 | 8.8 | 1 | 4500 | tr | 2.4 | | 13 | 10 |
| 6/28 | 12350 | 8.7 | 52 | 9.5 | 9.4 | 1+ | 4300 | tr | 2.4 | | 17 | 11 |
| 6/29 | 12465 | 8.8+ | 52 | 9.0 | 9.4 | 2 | 4300 | tr | 3.2 | | 15 | 12 |
| 6/30 | 12465 | 8.9+ | 54 | 9.0 | 9.7 | 2 | 4300 | tr | 3.7 | 120 | 18 | 12 |
| 7/1 | 12502 | 8.9 | 54 | 9.0 | 8.6 | 2 | 4400 | tr | 3.7 | 100 | 18 | 10 |
| 7/2 | 12590 | 8.9 | 54 | 9.0 | 8.4 | 2 | 4300 | .25 | 3.7 | | 18 | 9 |
| 7/3 | 12624 | 8.9 | 54 | 9.0 | 8.7 | 2 | 4100 | .25 | 3.7 | | 18 | 9 |
| 7/4 | 12624 | 8.9+ | 58 | 9.0 | 9.1 | 2 | 4400 | .25 | 3.8 | | 22 | 12 |
| 7/5 | 12645 | 8.9+ | 46 | 9.5 | 8.7 | 2 | 3700 | .25 | 3.9 | | 16 | 8 |
| 7/6 | 12695 | 9.1 | 42 | 9.0 | 10.4 | 2 | 2100 | .25 | 5.1 | | 15 | 5 |
| 7/7 | 12695 | 8.8+ | 67 | 10.0 | 8.4 | 2 | 2600 | .25 | 3.7 | 100 | 22 | 13 |
| 7/8 | 12827 | 8.9 | 64 | 10.0 | 8.4 | 2 | 2300 | .25 | 3.8 | 100 | 23 | 13 |
| 7/9 | 12886 | 8.9 | 51 | 10.0 | 9.8 | 2 | 2300 | .25 | 3.9 | 100 | 15 | 8 |
| 7/10 | 13047 | 8.9+ | 58 | 10.0 | 9.8 | 2 | 2100 | .25 | 3.9 | 100 | 17 | 10 |
| 7/11 | 13082 | 9.0 | 41 | 9.5 | 11.2 | 2 | 2100 | .35 | 3.5 | 100 | 12 | 5 |
| 7/12 | 13126 | 8.9 | 46 | 9.5 | 10.1 | 2 | 2100 | .25 | 3.9 | 100 | 15 | 8 |
| 7/13 | 13231 | 8.9 | 59 | 10.0 | 9.5 | 2 | 1900 | .25 | 3.7 | 100 | 23 | 19 |
| 7/14 | 13346 | 8.8 | 39 | 9.5 | 12.5 | 2 | 1500 | .25 | 3.8 | 100 | 10 | 5 |
| 7/15 | 13438 | 8.9 | 49 | 9.5 | 11.9 | 2 | 1500 | .25 | 3.9 | 80 | 17 | 9 |
| 7/16 | 13506 | 8.9 | 45 | 10.0 | 11.2 | 2 | 1600 | .50 | 3.9 | 60 | 15 | 10 |

MUD REPORT CONT'D

| DATE | DEPTH | WT | F.VIS. | PH | FILTR. | CK | CHLOR. | SD | SOLIDS | CAL | PV | YP |
|---|---|---|---|---|---|---|---|---|---|---|---|---|
| 7/17 | 13568 | 8.9 | 42 | 11.0 | 10.4 | 2 | 1500 | .50 | 3.9 | 60 | 19 | 9 |
| 7/18 | 13568 | 8.9 | 59 | 11.0 | 11.2 | 2 | 1500 | .25 | 4.3 | 60 | 21 | 14 |
| 7/19 ) | No report while fishing | | | | | | | | | | | |
| 7/20 ) | | | | | | | | | | | | |
| 7/21 | 13568 | 8.8 | 47 | 11.0 | 8.8 | 2 | 1300 | 1.5 | 3.5 | 80 | 16 | 10 |
| 7/22 | No report | | | | | | | | | | | |
| 7/23 | 13568 | 8.7 | 44 | 10.5 | 11.2 | 2 | 1500 | 1.0 | 4.3 | 100 | 11 | 4 |

## SURVEYS AND DRILLING FUNCTIONS

| DEPTH | DEVIATION | W.O.B. | R.P.M. | S.P.P. |
|---|---|---|---|---|
| 188 | 3/4 | 10,000 | 135 | 1500 |
| 380 | 1/2 | 10,000 | 130 | 1500 |
| 460 | 1/4 | 10-15,000 | 130 | 1500 |
| 545 | 1 | 10-15,000 | 130 | 1500 |
| 650 | 1 | 10-15,000 | 120 | 1600 |
| 747 | 1-1/4 | 10-15,000 | 140 | 1700 |
| 872 | 1-1/4 | 15,000 | 120 | 1100 |
| 968 | 1-1/2 | 15,000 | 130 | 1700 |
| 1205 | 1-1/2 | 30-35,000 | 90/120 | 1500 |
| 1331 | 1 | 35,000 | 80 | 1500 |
| 1455 | 1/2 | 35,000 | 80 | 1500 |
| 1522 | 3/4 | 30,000 | 80 | |
| 1684 | 3/4 | 35,000 | 80 | 1500 |
| 1803 | 1/2 | 35,000 | 80 | 1500 |
| 1994 | 1/2 | 35,000 | 80 | 1600 |
| 2051 | 2-1/2 | at trip | | |
| 2100 | 3/4 | 30-35,000 | 110 | 1700 |
| 2280 | 1 | 30-35,000 | 110 | 1700 |
| 2448 | 1-1/2 | 35,000 | 110 | 2500 |
| 2540 | 1-1/8 | 35,000 | 110 | 2500 |
| 2677 | $1^{o}$ | 35,000 | 110 | 1700 |
| 2820 | 2-3/4 | 35,000 | 110 | 1700 |
| 2883 | 2 | 30,000 | 110 | 1700 |
| 2951 | 2 | 30,000 | 120 | 1700 |
| 3010 | 2 | 30,000 | 120 | 1700 |
| 3138 | 1-7/8 | 25,000 | 120 | 2600 |
| 3192 | $2^{o}$ | 50,000 | 80 | 2500 |
| 3504 | 2-1/4 | 50,000 | 80 | 2000 |
| 3662 | 1-3/4 | 50,000 | 80 | 2000 |
| 3788 | 1-1/2 | 40-50,000 | 120/80 | 2000 |
| 4011 | 2+ | 40-50,000 | 80/90 | 2000 |
| 4079 | 2-1/2 | 30-35,000 | 80/90 | 2000 |
| 4250 | $3^{o}$ | 65,000 | 90 | 1500 |
| 4374 | 3-1/4+ | 50,000 | 60 | 1500 |
| 4435 | 2-1/2 | 50,000 | 60 | 1500 |

## SURVEYS AND DRILLING FUNCTIONS CONT'D

| DEPTH | DEVIATION | W.O.B. | R.P.M. | S.P.P. |
|---|---|---|---|---|
| 4564 | 3-1/2° | 50-55,000 | 90 | 2500 |
| 4599 | 4 | 50-55,000 | 90 | 2500 |
| 4650 | 1-3/4 | 50-55,000 | 90 | 2500 - misrun new survey tool |
| 4710 | 4 | 50-55,000 | 90 | 2500 |
| 4741 | 3-3/4 | 50-55,000 | 90 | 2500 |
| 4839 | 4 | 50-55,000 | 90 | 2500 |
| 4901 | 4 | 50-60,000 | 100/90 | 2600 |
| 5043 | 3-1/4 | 60,000 | 90 | 2600 |
| 5103 | 3 | 60,000 | 90 | 2600 |
| 5225 | 2-3/4 | 45,000 | 100 | 2700 |
| 5605 | 2-1/2 | 45,000 | 100 | 2700 |
| Cut window and dynadrill | | | | |
| 5617 | 3-1/4 S33W | | | |
| 5650 | 3-3/4 S78W (magnetic interference) | | | |
| 5680 | 3-3/4 N74W " " | | | |
| 5722 | 3-1/4 S20E | 20,000 | 60/70 | 2500 |
| 5849 | 3-3/4 S35W | 35,000 | 65 | 2500 |
| 5912 | 3-3/4 S37W | 35,000 | 65 | 2500 |
| 5980 | 3-3/4 S35W | 35,000 | 60/80 | 2200 |
| 5989 | 3-1/2 S34W | 30-40,000 | 60/80 | 2200 |
| 6150 | 3-1/2 S22W | 35,000 | 80 | 1900 |
| 6187 | 4° S29W | 35,000 | 80 | 1900 |
| 6320 | 4° S25W | 35,000 | 80 | 1900 |
| 6392 | 4-1/4° S25W | 45,000 | 50/70 | 2400 |
| 6465 | 3-1/2° S25W | 35-45,000 | 50/60 | 2400 |
| 6628 | 4-1/4 S25W | 45,000 | 65/90 | 1800/2500 |
| 6867 | 4-1/4 S10W | 45,000 | 80/90 | 2400 |
| 6898 | 3-3/4 S22W | 40-45,000 | 60 | 2000 |
| 6898 | 3-1/2 S12W | 40-45,000 | 60 | 2000 |
| 6950 | 3-3/4 S22W | 40-45,000 | 60 | 2500 |
| 7177 | 3-1/2 S13W | 40-45,000 | 60/80 | 2500 |
| 7180 | 3-1/2 S17W | 40-45,000 | 60/80 | 2500 |
| 7303 | 3-1/2 S7W | 40-45,000 | 60/80 | 2500 |
| 7427 | 3-3/4 S10W | 40-45,000 | 80 | 2500 |
| 7432 | 3-3/4 S10W | 40-45,000 | 80 | 2500 |
| 7589 | 3-1/2 S8W | 50-60,000 | 45 | 2500 |

## SURVEYS AND DRILLING FUNCTIONS CONT'D

| DEPTH | DEVIATION | W.O.B. | R.P.M. | P.P. |
|---|---|---|---|---|
| 7647 | 3-1/2° S8W | 35-50,000 | 50/75 | 2400 |
| 7804 | 3-1/2 S5W | 45,000 | 70/75 | 2400 |
| 7807 | 3-1/2 S2W | 45,000 | 70/75 | 2400 |
| 7960 | 3-1/2 S1E | 40-45,000 | 70/75 | 2400 |
| 8628 | 2 S15E | 50-55,000 | 70 | 2500 |
| 8912 | 2 S25E | 50-55,000 | 70/75 | 2600 |
| 9183 | 1-3/4 S38E | 40-60,000 | 60/80 | 2600 |
| 9618 | 2-1/4 S34E | 25,000 | 90 | 2500 |
| 9803 | 3 S30E | 30-40,000 | 60/80 | 2500 |
| 9951 | 3-1/4 S28E | 30-50,000 | 60/80 | 2500 |
| 9993 | 3-1/4 S23E | 35-40,000 | 70 | 2600 |
| 10441 | 5-1/2 S20E | 30-50,000 | 70 | 2600 |
| 10551 | 4-3/4 S14E | 40-60,000 | 60/50 | 2500/2700 |
| 10798 | 6 S23E | 45-55,000 | 50/70 | 2500 |
| 10901 | 6 S12E | 55,000 | 50 | 2500 |
| 11199 | 6-3/4 S15E | 50-65,000 | 50/55 | 2500 |
| 11448 | 5-3/4 S18E | 35,000 | 60 | 2600 |
| 11758 | 6-1/4 S39E | 28-35,000 | 70 | 2500 |
| 11861 | 6 S40E | 28-35,000 | 70 | 2500 |
| 11956 | 5-3/4 S47E | 25,000 | 70 | 2400 |
| 12010 | 5-1/2 S48E | 25,000 | 70 | 2400 |
| 12085 | 4-3/4 S53E | | | |
| 12132 | 4 S59E | 25-28,000 | 70/60 | 2200 |
| 12231 | 3-3/4 S61E | 25-28,000 | 70 | 2200 |
| 12322 | 3-1/2 S74E | 28,000 | 70 | 2200 |
| 12418 | 3-3/4 S74E | 28,000 | 70 | 2200 |
| 12451 | 3-3/4 S77E | 20-23,000 | 50/60 | 2400 |
| 12470 | 4 N89E | 30 | 60 | 2300 |
| 12584 | 4-1/2 N69E | 20-39 | 50/75 | 2500/2300 |
| 12668 | 5 N75E | 25,000 | 70 | 1500 |
| 12784 | 5-1/2 N77E | 25,000 | 70 | 1950/2000 |
| 12905 | 5-3/4 N88E | 25,000 | 70 | 2000 |
| 13033 | 6-1/2 N86E | 25,000 | 70 | 2025/2000 |
| 13149 | 6-1/4 N86E | 25,000 | 60/70 | 1700/2025 |
| 13344 | 6-3/4 N82E | 25,000 | 60 | 1700/1400 |

## GENERAL LITHOLOGY

| DEPTH/FORMATION | DESCRIPTION |
|---|---|
| 0-1340' | Predominantly gray-grayish green shales and siltstones, interbedded with salt and pepper fine grained sandstones. Organic material is present as veinlets and stringers throughout along with pyrite and gypsum, and bentonite. |
| 1340-2104'<br>Coalville member | Variegated lavender, maroon, and gray-grayish green shales, gray carbonaceous siltstones, and gy to salt and pepper sandstones. Sandstones are conglomeratic and coal beds thicken toward the bottom. |
| 2104' | East Fork Fault (normal) |
| 2104-3112'<br>Grass Ck. and<br>Dry Hollow members | Interbedded gray and brown shales and siltstones, salt and pepper-gray conglomeratic sandstones, and sandy, cherty conglomerates. A thick conglomerate bed is at the base of the Dry Hollow member. |
| 3112-3312'<br>Oyster Ridge member | Upper section consists of interbedded gray, brown, green shales, siltstones, gray, white, orange sandstones with occasional limestone nodules. The bottom section is thicker bedded sandstones interbedded with variegated purple-maroon-green shales and siltstones. |
| 3312-3570'<br>Allen Hollow member | Black-dark gray carbonaceous shales, grading to/from coal, gray, white, and brown sandstones, occasionally conglomeratic, occasional fossil fragment (gastropod). |
| 3570-3652<br>Coalville member | Predominantly gray-salt and pepper sandstone, fine-medium grained, calcareous, pyritic and occasionally carbonaceous, interbedded with gray-gray green carbonaceous shale and siltstone, some grading to coal. |
| 3652-5210'<br>Chalk Creek member | Gray green, gray, maroon, brown calcareous and bentonitic shales and siltstones interbedded with white conglomeratic, cherty and pyritic sandstones. Occasional limestone nodules and coal beds throughout. Increase in coal and interbedded shale toward bottom; very fossiliferous in bottom half. Shale becomes very bentonitic toward bottom of member. |
| 5210-5530<br>Spring Canyon member | Predominantly brown non-calcareous shale interbedded with numerous coal beds in upper half. Lower half contains predominantly white and salt and pepper sandstones, dark brown siltstones and pyritic coal beds generally thicker than upper half. |

GENERAL LITHOLOGY CONT'D

| DEPTH/FORMATION | DESCRIPTION |
|---|---|
| 5530-5788'<br>Longwall member | Light gray and salt and pepper fine grained-medium grained calcareous and glauconitic sandstones interbedded with brown, dark gray and black carbonaceous shales. |
| 5788-6032'<br>Aspen Shale | Dark gray to black splintery silaceous shale with fish scales and plant debris throughout. Shale interbeds with numerous bentonite beds and one tuff bed. |
| 6032-6310'<br>Bear River | Dark gray, brown shales and siltstones, carbonaceous grading to shaley coal; occasionally pyritic and fossiliferous; lower half contains many white-light gray fine to coarse grained calcareous sandstones, and shale becomes increasingly bentonitic. |
| 6310-9700'<br>Kelvin | A very thick section of brown-reddish brown and variegated shales, brown-orangish brown siltstones, red brown pebbly sandstones. This section contains many tan-light brown limestone nodules, and is very fractured and faulted in bottom 100' with abundant clay filled fractures. |
| 9700-10124'<br>Kelvin and Ephraim | Large sequence of brown-reddish brown and variegated shales, brown-orange pebbly and cherty siltstones, brown-reddish brown fine-coarse grained pebbly and conglomeratic sandstones, and numerous lenses and beds of tan-gray argillaceous limestones. Basal cherty conglomerate is the Ephraim conglomerate. |
| 10124-10200'<br>Stump Redwater member | Light gray-white very fine-fine grained sandstone, calcareous and glauconitic, clay filled, interbedded with gray-gray green calcareous shales; abundant chert throughout. |
| 10200-10425'<br>Curtis member | Intraformational fault @ 10200. Red brown-brown shale, gray-green claystones with shale parting, white-light gray very fine-fine grained sandstone, pebbly and very cherty, slightly glauconitic. |
| 10425-11388'<br>Preuss | Brown-red brown, brownish orange shales, siltstones and sandstones. Shales are occasionally bentonitic, and sandstones are pebbly and cherty. Clay fracture filling throughout along with two interformational faults. Shale decreases in bottom half; pebbly and cherty siltstone increases. Interbedded salt and shaley anhydrite 11313-11322. |

GENERAL LITHOLOGY CONT'D

| DEPTH/FORMATION | DESCRIPTION |
|---|---|
| 11388-11864'<br>Twin Creek<br>Giraffe Creek member | Gray-dark gray shaley, sandy, occasionally oolitic limestone interbedded with gray, calcareous, pyritic and occasionally anhydritic shale. Several beds of white-light gray very fine-fine grained glauconitic sandstone. |
| 11864-12126'<br>Leeds Creek member | Light-medium gray shaley limestone with occasional pink anhydrite stringers; shale stringers-gray, grayish green, bentonitic - ashy; tuffaceous in part. Light-medium gray, salt and pepper very fine grained sandstone beds near the bottom. Clay filled. |
| 12126-12326'<br>Watton Canyon member | Light gray-gray brown shaley - oolitic limestone with abundant clay fracture fill. Some white-light green claystone beds. |
| 12326-12364'<br>Boundary Ridge member | Reddish brown-brown non-calcareous siltstone interbedded with white crystalline anhydrite siltstones grade to silty shale, micro micaceous. |
| 12364-12598<br>Rich member | Predominantly light-medium gray silty and shaley limestone with occasional oolites, grading in part to limey medium-dark gray shale and siltstone. This member is fractured throughout, and is clay filled in the upper half. The lower half exhibits fair open fracture porosity. |
| 12598-12678'<br>Sliderock member | Brown-brownish gray, waxy, cryptocrystalline, very clean limestone, highly fractured in top 30'. Limestone becomes grayer toward the bottom, and the bottom 20' is oolitic and shaley. |
| 12678-12768'<br>Gypsum Springs member | Interbedded reddish brown-reddish orange cherty siltstone and white-cream earthy anhydrite. |
| 12768-12940'<br>Nugget | White, clear and frosted fine-coarse grained, well sorted sandstone showing fair-good porosity. Sandstone is partly tan-light brown oil stained, and has black oil flecks with yellow/gold fluorescence, blue-green ring cut - slow streaming yellow cut. |
| 12940-13020'<br>Nugget | White, clear and frosted, fine-some coarse grained, well sorted, sandstone with good porosity. Coarse grained sections are unconsolidated. Sandstone has tan-light brown oil stain - black oil flecked, with yellow gold-yellow blue fluorescence, and yellow ringing-slow streaming cut. |
| 13020-13060'<br>Nugget | White-clear, brownish orange fine grained tight sandstone. Sandstone is slightly glauconitic, has poor porosity, and has no to poor oil staining, with weak yellow/blue milky cut. |

GENERAL LITHOLOGY CONT'D

| DEPTH/FORMATION | DESCRIPTION |
|---|---|
| 13060-13150' Nugget | White-clear and frosted, fine-sme coarse grained, well sorted sandstone with poor-good porosity, becoming silty in bottom 30'. Siltstone is gray, calcareous and slightly sandy. Sandstone is clay filled and glauconitic. Oil stain is light brown, and cut is streaming yellow with yellow residue. |
| 13150-13200' Nugget | Sandstone is mostly brown due to oil staining, fine-coarse grained, some unconsolidated, good-excellent porosity, well sorted, with fast blooming-fast yel streaming cut and greenish yellow residue. |
| 13200-13300' Nugget | White, clear and frosted fine-medium grained, poor-good porosity sandstone, glauconitic and clay filled. This zone is possibly highly fractured with several thief zones. Sandstone has brown oil stain and black oil flecks with yellow to greenish yellow fluorescence. Bottom 10' is silty with gray calcareous sandy siltstone. |
| 13300-13380' Nugget | White, clear-frosted, becoming pink, fine grained-coarse grained, poor-fair porosity, glauconitic, occasionally silty sandstone. Sandstone is possibly highly fractured with several thief zones, and high torque. No to poor oil staining with yellow fluorescence and yel ring - streaming cut. |
| 13380-13430' | No returns |
| 13430-13500' Nugget | Pink-light orange, white, fine-medium grained, moderately well sorted, poor-fair porosity, silaceous sandstone, some unconsolidated, glauconitic, clay filled, possibly fractured. Trace of oil stain, trace of yellow fluorescence, no cut. |
| 13500-13568' Nugget - T.D. | White-clear, light orange, medium-coarse grained, becoming fine grained at bottom, moderately well sorted, porosity fair-good, decreasing downward. Sandstone becoming silaceous and tight. Trace oil stain, no fluorescence or cut. |

# RP Operating, Inc.

## Petroleum Consultants

GEOLOGICAL REPORT

DAVIS OIL COMPANY

#1 Logan Federal
SE NE Sec. 26 T3N R7E
Summit Co., Utah

Geology by
Michael E. Barber
Ogden, Utah

5670 South Syracuse Circle • Suite 420 • Englewood, Colorado 80111
(303) 694-3832

TABLE OF CONTENTS

RESUME..... 1
SUMMARY AND CONCLUSIONS..... 3
FORMATION TOPS..... 4
ELECTRIC LOG AND SHOW DATA..... 5
BIT RECORD.....12
DAILY DRILLING CHRONOLOGY.....14
MUD RECORD.....29
SURVEYS AND DRILLING FUNCTIONS.....34
LITHOLOGY SUMMARY.....37
LITHOLOGIC LOG IN BACK FLAP

RECEIVED
AUG 23 1982
DIVISION OF
OIL, GAS & MINING

# RESUME

| | |
|---|---|
| OPERATOR: | Davis Oil Company |
| WELL NAME & NUMBER: | #1 Logan Federal |
| LOCATION: | SE NE SEC 26 T3N R7E |
| AREA: | North Pineview Prospect/Wildcat |
| COUNTY: | Summit |
| STATE: | Utah |
| ELEVATION: | G.L. 7300' K.B. 7325' |
| ENGINEER: | Mike Cleary, Jack Krug, Ornen International |
| GEOLOGIST: | Michael E. Barber, RP Operating, Inc. |
| SPUD DATE: | 12/21/82 T.D. 7/23/82 |
| COMPLETION DATE: | Pending |
| HOLE SIZE: | 17½" 1008-5730; 12¼" 5552-11495; 8½" 11495-TD |
| CASING: | 20" @ 1008'; 13-3/8" @ 5730'; Window @ 5552'; 9-5/8" @ 11,410' |
| CEMENTING: | Halliburton |
| CONTRACTOR: | Manning Rig #14 |
| EQUIPMENT: | National 110 |
| TOOLPUSHER: | C. Dunnon; R. Gideon, M. Timmons |
| DRILLERS: | Tom Myron, Randy Reynolds, Rocky Suter, Bill Gebhart |
| PUMP: | Emsco FB 1300, Pump 1 & 2 |
| DRILL COLLARS: | 9":7-5/8 Reg, 7" H90; 7":4½ I.F., 5" H90 |
| DRILL PIPE: | 5" 4½ I.F. 19.5#/ft. |
| DRILLING MUD: | Imco |
| MUD TYPE: | Gel/Lime non-lightly dispersed; salt saturated 10731-11495 |
| MUD ENGINEER: | Shel Harras, Sean Butler |
| DRILL STEM TESTS: | None |
| MUD LOGGING: | Tooke Engineering |
| TYPE UNIT: | 2 man, hydraulic monitor, drill rate plotter |
| MUD LOGGING ENGINEERS: | Jeff McClellan, Nicola Stanley, Tom Harris, Brian Nicoles, Todd Thiesse |

RESUME - CONTINUED

| OPEN HOLE LOGS: | RUN # | INTERVAL | TYPE |
|---|---|---|---|
| Schlumberger | 1 | 1008-5730 | BHC/Sonic DIL/SFL |
| " | 2 | 5552-11248 | BHC/Sonic |
| " | 1 | 5552-11211 | DLL/Micro SFL |
| " | 1 | 5564-11210 | Continuous Dipmeter |
| " | 1 | 5552-11210 | FDC-CNL |
| " | 2 | 10690-13484 | DIL-SFL |
| " | 2 | 11198-13484 | FDC-CNL |
| " | 3 | 10680-13481 | BHC/Sonic - Sonic Wavelength |
| " | 2 | 11410-13485 | Dipmeter - FIL |
| " | 1 | Cyberlook | Cyberlook |

DRILL STEM TESTS: None run

TOTAL DEPTH: Driller - 13492; Schlumberger - 13487

DRILLING TIME: 215 days

BOTTOM FM: Nugget SS

## SUMMARY AND CONCLUSIONS

The Davis Oil Logan Federal #1, North Pineview prospect was drilled to T.D. of 13568' in 215 days. Primary objective was the Nugget sandstone, topped at 12758'. Hydrocarbon shows were also possible in the Cretaceous Frontier, Bear River, Kelvin; Jurassic Stump, Twin Creek, as well as the Jura-Triassic Nugget. Production from these formations occurs at nearby Pineview, East Anschutz, Anschutz Ranch, Elkhorn and Lodgepole fields.

Logan Federal #1 is located structurally high on a gently ascending limb (5-10$^{o}$ NW dip) of an overturned anticline, along the leading edge of the Absaroka Thrust fault. Imbricate thrust faults have isolated this structure from those of East Anschutz and Pineview fields. Normal faulting evident on the surface is related to imposition of the Uinta Uplift on the Absaroka Plate. Logan Federal #1 spudded in Middle Frontier sediments on the downthrown block of the East Fork fault (normal). The fault, crossed at 2104', faulted into upper Frontier after which a normal sequence was drilled to T.D.

Drilling problems were due to sloughing and swelling shales and coals in the Frontier and Bear River formations; fractures, thief zones and minor displacement faults in the Kelvin and Preuss formations; fractures and thief zones in the Twin Creek formation; fractures and thief zones ultimately causing differentially stuck pipe in the Nugget formation. The Preuss evaporites presented no problems due in part to the thinness of the salt section, and to the salt-saturated mud system.

No hydrocarbon shows were encountered until the top of the Nugget SS. A small zone in the Freuss fm. contained carbon dioxide, and a fractured zone in the sliderock member of the Twin Creek formation was noteworthy, although no hydrocarbons were detected. Due to overbalanced mud conditions, shows from the fracture zones in the Twin Creek may have been flushed ahead of the bit. The overbalanced conditions must also be taken into consideration in evaluating the Nugget shows. Mud was easily lost into fracture and unconsolidated zones. Visual porosity was generally fair to good, with oil staining and gas shows varying according to the porosity. Electric logs showed porosity from 8-12%, and highs from 14-16% p.v. through the Nugget, generally decreasing in the bottom section. Resistivity was high and a gas effect was observed on the FDC-CNL log showing a possible gas cap and gas/oil contact at 12940'. Water saturations calculated at wellsite varied from 35%-55% down to 13180', and were higher than 63% below 13260'. Based on the visual shows and E-log results, Logan Federal #1 has very good production potential for Davis Oil. No cores or DST's were taken, and completion is pending.

## FORMATION TOPS

Surface Elevation: G.L. 7300' K.B. 7325'

| FORMATION | DEPTH FROM K.B. | | SUB SEA | |
|---|---|---|---|---|
| | SAMPLE TOPS | | | |
| Frontier FM. | Surface | | 7325' | |
| Fault - Grass Ck. Mbr./Dry Hollow Mbr. | 2104' | | 5221' | |
| Oyster Ridge Mbr. | 3112' | | 4213' | |
| Allen Hollow Mbr. | 3312' | | 4013' | |
| Coalville Mbr. | 3570' | | 3755' | |
| Chalk Creek Mbr. | 3652' | | 3673' | |
| Spring Cny. Mbr. | 5210' | | 2115' | |
| Longwall Mbr. | 5530' | | 1795' | |
| Aspen Fm. | 5788' | | 1537' | |
| Bear River Fm. | 6032' | | 1293' | |
| Kelvin Fm. | 6310' | | 1015' | |
| Stump Fm. | 10124' | | - 2799' | |
| Preuss Fm. | 10425' | | - 3100' | |
| Salt | 11313-11322' | | | |
| | | E-LOG TOPS | | E-LOG SUB SEA |
| Twin Ck. Fm. | 11388' | 11402' | - 4063' | - 4077' |
| Giraffe Ck. Mbr. | | | | |
| Leeds Ck. Mbr. | 11864' | 11858' | - 4539' | - 4533' |
| Watton Cny. Mbr. | 12126' | 12126' ? | - 4801' | - 4801' |
| Boundary Ridge Mbr. | 12280' | 12282' | - 4955' | - 4957' |
| Rich Mbr. | 12364' | 12352' | - 5039' | - 5027' |
| Sliderock Mbr. | 12598' | 12594' | - 5273' | - 5269' |
| Gypsum Springs Mbr. | 12678' | 12678' ? | - 5353' | - 5353' |
| Nugget SS. | 12768' | 12758' | - 5443' | - 5433' |

## SIGNIFICANT DRILLING BREAKS - NUGGET FM.

| INTERVAL | DRILL RATE | TOTAL GAS | PPM C-1 | C-2 | C-3 | C-4 | OIL SHOW |
|---|---|---|---|---|---|---|---|
| 12756-12790' | 5-15 min/ft. | 14 u. | 2,600 | 240 | 60 | | Poor |
| 12800-12810' | 5½ min/ft. | 30 u. | 8,800 | 420 | 180 | 40 | Good-Exc. |
| 12840-12844' | 4-7 min/ft. | 42 u. | 16,800 | 1,200 | 540 | 320 | Good-Exc. |
| 12868' | 4 min/ft. | 56 u. | 13,000 | 1,200 | 720 | 400 | Fair |
| 13004-13010' | 3 min/ft. | 60 u. | 14,000 | 1,200 | 600 | 200 | Poor-Fair |
| 13012-13018' | 3-5 min/ft. | 90 u. | 25,600 | 2,160 | 960 | 480 | Poor-Fair |
| 13090-13094' | 4-5 min/ft. | 55 u. | 13,000 | 1,260 | 540 | 160 | Good |
| 13100-13112' | 2-3 min/ft. | 52 u. | 19,200 | 1,920 | 840 | 480 | Good |
| 13150-13164' | 1-4 min/ft. | 67 u. | 18,800 | 1,800 | 840 | 320 | Good-Exc. |
| 13170-13190' | 4-6 min/ft. | 40 u. | 8,200 | 600 | 90 | 20 | Good-Exc. |
| 13240-13250' | 5 min/ft. | 40 u. | 9,200 | 960 | 420 | 160 | Fair |
| 13252-13260' | 4 min/ft. | 45 u. | 9,400 | 1,020 | 480 | 160 | Good-Exc. |
| 13272-13278' | 3.5 min/ft. | 92 u. | 19,600 | 2,160 | 1320 | 320 | Fair |
| 13290-13298' | 3-5 min/ft. | 40 u. | 8,000 | 720 | 270 | 120 | Good |
| 13368-13376' | 3-4 min/ft. | 54 u. | 11,800 | 1,500 | 780 | 320 | Fair |

$S_W$ VALUES CALCULATED IN NUGGET
USING ARCHIE'S FORMULA FOR WATER SATURATION
ASSUMING AN $R_W$ VALUE OF .142
(Based on $R_{WA}$ through wet Nugget
American Quasar Howell Livestock)

| INTERVAL | SONIC Ø | $R_T$ | $S_W$ |
|---|---|---|---|
| 12760-12790' | 6.5 | 110 | 55% |
| 12810-12840' | 12 | 80 | 35% |
| 12870-12900' | 11 | 60 | 44% |
| 12900-12940' | 11 | 40 | 54% |
| 12960-13000' | 9 | 55 | 57% |
| 13024-13080' | Cycle skipping | | |
| 13102-13120' | 16 | 25 | 47% |
| 13120-13128' | 12½ | 35 | 51% |
| 13128-13124' | 13½ | 55 | 38% |
| 13146-13151' | 14 | 40 | 43% |
| 13158-13180' | 12 | 35 | 53% |
| 13262-13272' | 11 | 30 | 63% |

Schlumberger

# DUAL INDUCTION-SFL
## WITH LINEAR CORRELATION LOG

COUNTY
FIELD
LOCATION
WELL
COMPANY

CO[illegible]NY Davis Oil Company

WELL Logan Federal #1

FIELD North Pineview

COUNTY Summit STATE Utah

LOCATION SENE

API SERIAL NO. 26 | TWP 3N | RANGE 7E

Other Services: LDT-CNL BHC-GR HDT

Permanent Datum: GL ; Elev.: 7300 est

Log Measured From KB 25 Ft. Above Perm. Datum

Drilling Measured From KB

Elev.: K.B. 7325 est D.F. 7324 G.L. 7300

| | | | | |
|---|---|---|---|---|
| Date | 7-24-82 | | | |
| Run No. | TWO | | | |
| Depth—Driller | 13492 | | | |
| Depth—Logger | 13490 | | | |
| Btm. Log Interval | 13484 | | | |
| Top Log Interval | 10690 | | | |
| Casing Driller | 9 5/8 11410 | @ | @ | @ |
| Casing Logger | 11407 | | | |
| Bit Size | 8 1/2 | | | |
| Type Fluid Type | Lightly Dispersed | | | |
| Dens. / Visc. | 8.7 46 | | | |
| pH / Fluid Loss | 10.5 10.2 ml | ml | ml | ml |
| Source of Sample | Mud Tank | | | |
| Rm @ Meas. Temp. | 5.60 @ 74 F | @ F | @ F | @ F |
| Rmf @ Meas. Temp. | 4.84 @ 74 F | @ F | @ F | @ F |
| Rmc @ Meas. Temp. | 3.10 @ 74 F | @ F | @ F | @ F |
| Source: Rmf / Rmc | Meas Calc | | | |
| Rm @ BHT | 2.4 @ 184 F | @ F | @ F | @ F |
| TIME Circulation Stopped | 2100 (7-23) | | | |
| TIME Logger on Bottom | 0430 (7-24) | | | |
| Max. Rec. Temp. | 184 F | F | F | F |
| Equip. / Location | 8158 Evanston | | | |
| Recorded By | Johnson | | | |
| Witnessed By | Barber/Krug | | | |

FOLD HERE

The well name, location and borehole reference data were furnished by the customer.

SCALE CHANGES

| Type Log | Depth | Scale Up Hole | Scale Down Hole |
|---|---|---|---|
| | | | |

| | |
|---|---|
| Run No. | TWO |
| Service Order No. | 283010 |
| Fluid Level | Full |
| Salinity ppm. cl | 1500 |

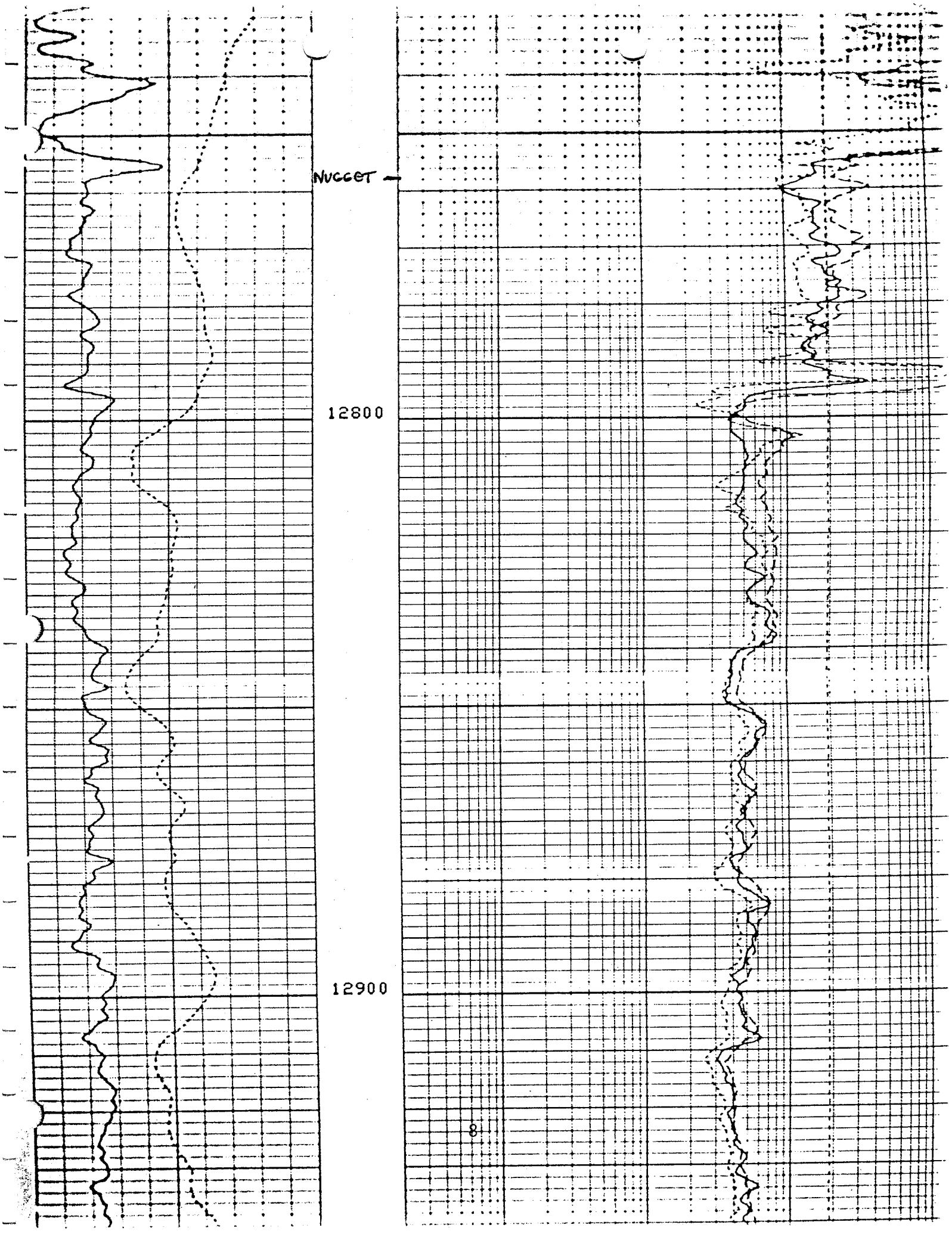
NUGGET
12800
12900

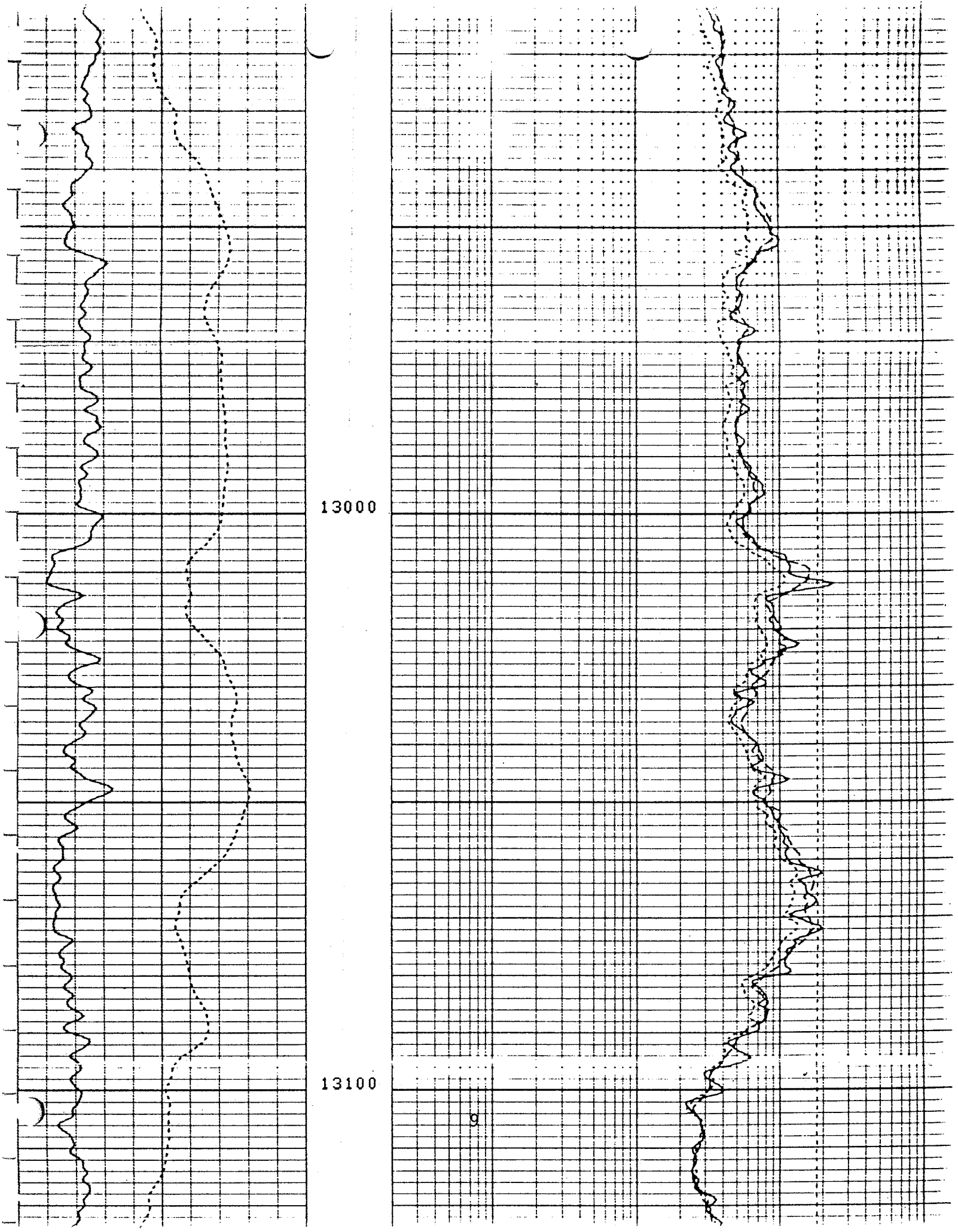
13000
13100
9

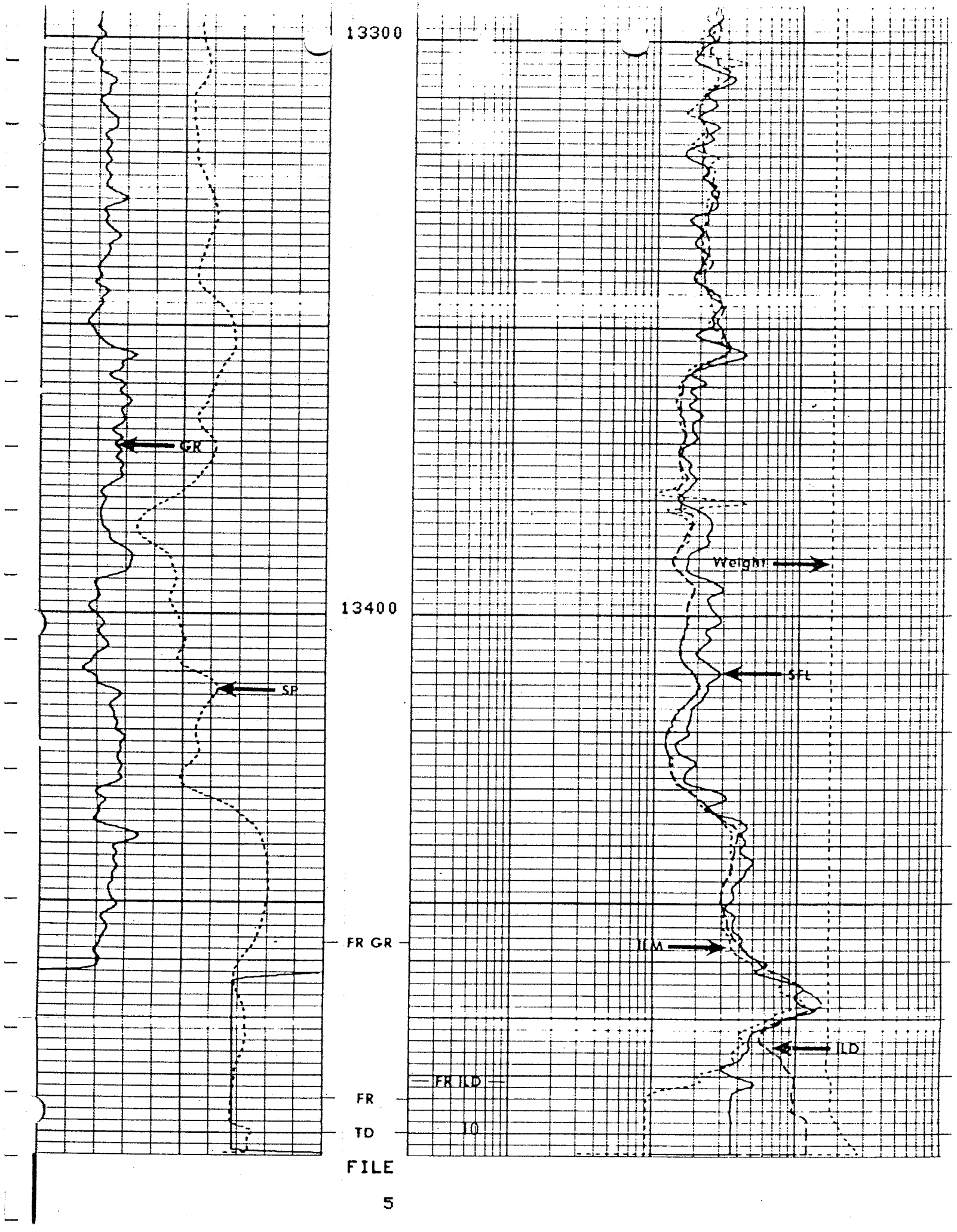
13300
GR
13400
SP
FR GR
FR
TD
FILE
Weight
SFL
ILM
ILD
FR ILD
10

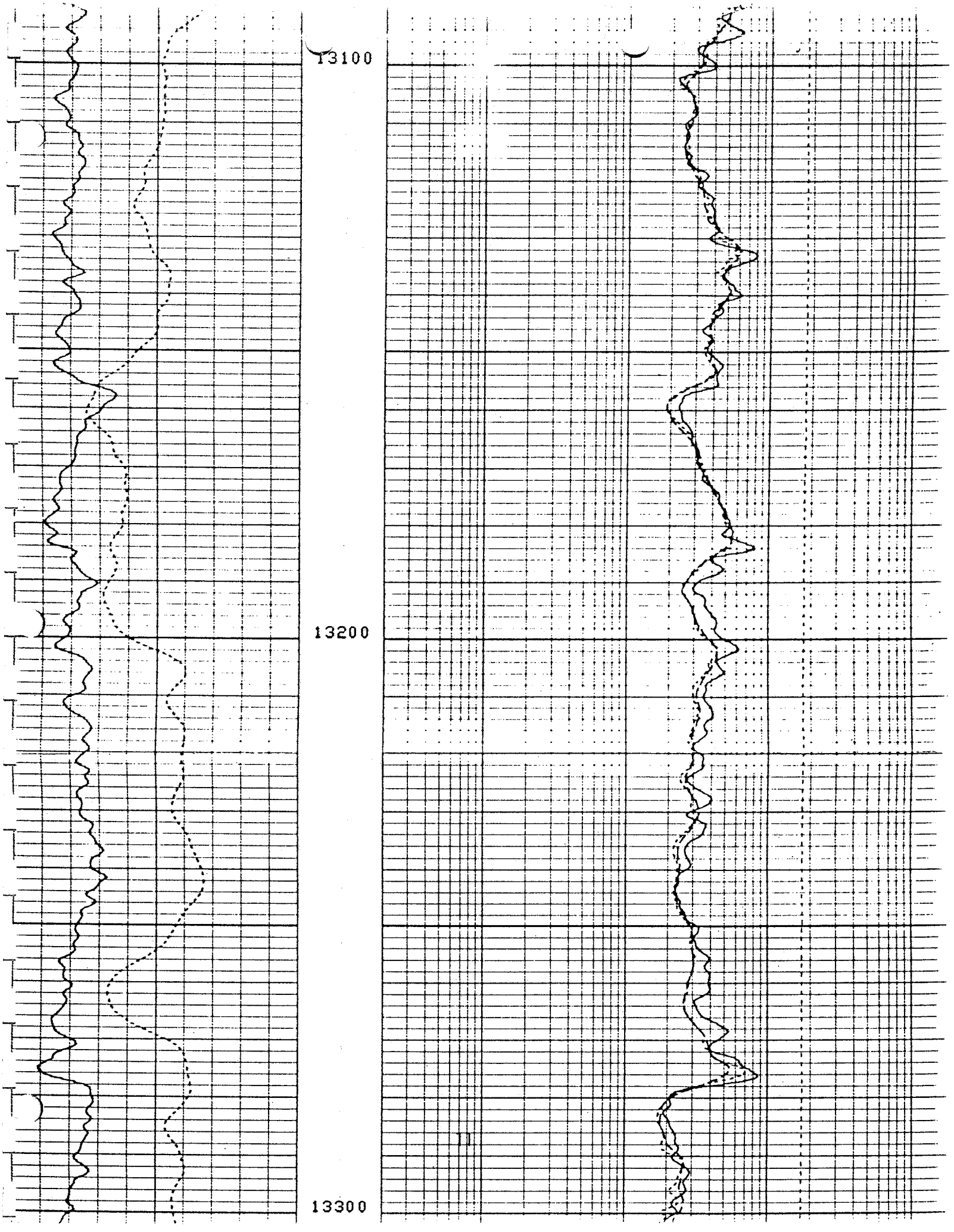
13100
13200
13300

## BIT RECORD

| NO. | MAKE | TYPE | SIZE | IN | OUT | FOOTAGE | HOURS |
|---|---|---|---|---|---|---|---|
| 1 | STC | DTJ | 17½" | | 311' | 244' | 32-3/4 |
| 2 | SEC | S4TJ | 17½" | 311' | 574' | 263' | 23½ |
| 3 | REED | Y13J | 17½" | 574' | 751' | 177' | 23½ |
| 4 | SEC | M4NJ | 17½" | 751' | 1,020' | 269' | 45½ |
| 5 | GRANT | Hole Opener | 26" | | | | |
| 6 | GRANT | " " | 26" | | | | |
| 7 | HTC | OSC3J | 17½" | 1,023' | 1,100' | 77' | 13 |
| 8 | HTC | X33 | 17½" | 1,100' | 2,081' | 981' | 91½ |
| 9 | SEC | S84 | 17½" | 2,081' | 3,018' | 951' | 87½ |
| 10 | HTC | M4M | 17½" | 3,018' | 3,138' | 117' | 15 |
| 11 | HTC | X33 | 17½" | 3,138' | 3,687' | 549' | 78¼ |
| 12 | HTC | OSC16J | 17½" | 3,687' | 3,816' | 129' | 17-3/4 |
| 13 | SEC | S88 | 17½" | 3,816' | 4,096' | 280' | |
| 14 | STC | 3JS | 17½" | 4,096' | 4,335' | 239' | 45 |
| 15 | HTC | X22 | 17½" | 4,335' | 4,903' | 568' | 55 |
| 16 | HTC | X22 | 17½" | 4,903' | 5,730' | 827' | 37 |
| 17 ) | | | | | | | |
| 18 ) | | | | | | | |
| 19 ) | Mills used while fishing for cones | | | | | | |
| 20 ) | | | | | | | |
| 21 ) | | | | | | | |
| 22 | REED | FP52 | 12¼" | 5,701' | 5,793' | 92' | 16¼ |
| 23 | HTC | J22 | 12¼" | 5,793' | 6,225' | 432' | 65 |
| 24 | STC | F-2 | 12¼" | 6,225' | 6,540' | 315' | 38½ |
| 25 | STC | F-2 | 12¼" | 6,540' | 6,949' | 409' | 69½ |
| 26 | HTC | J22 | 12¼" | 6,949' | 7,371' | 422' | 50½ |
| 27 | HTC | J22 | 12¼" | 7,371' | 7,665' | 294' | 41 |
| 28 | REED | H551 | 12¼" | 7,665' | 8,011' | 346' | 41 |
| 29 | STC | F-2 | 12¼" | 8,011' | 8,627' | 616' | 63 |
| 30 | STC | F-2 | 12¼" | 8,627' | 9,258' | 631' | 63 |
| 31 | STC | F-2 | 12¼" | 9,258' | 9,599' | 341' | 37¼ |
| 32 | HTC | J22 | 12¼" | 9,599' | 9,694' | 95' | 18½ |

BIT RECORD CONT'D

| | NO. | MAKE | TYPE | SIZE | IN | OUT | FOOTAGE | HOURS |
|---|---|---|---|---|---|---|---|---|
| | 33 | STC | F4 | 12¼" | 9,694' | 9,928' | 234' | 47 |
| | 34 | STC | F4 | 12¼" | 9,928' | 10,028' | 100' | 21 |
| | 35 | REED | FP53 | 12¼" | 10,028' | 10,385' | 357' | 55 |
| | 36 | STC | F-4 | 12¼" | 10,385' | 10,483' | 98' | 24 |
| | 37 | REED | FP62 | 12¼" | 10,483' | 10,614' | 131' | 38 |
| | 38 | REED | FP52 | 12¼" | 10,614' | 10,713' | 99' | 24½ |
| ıshed out jet | 39 | SEC | S86F | 12¼" | 10,713' | 10,713' | 0 | 0 |
| | 40 | STC | F3 | 12¼" | 10,713' | 10,832' | 101' | 18½ |
| | 41 | SEC | M84F | 12¼" | 10,832' | 10,954' | 122' | 34 |
| | 42 | HTC | J55R | 12¼" | 10,954' | 11,038' | 84' | 31 |
| | 43 | SEC | M89TF | 12¼" | 11,038' | 11,219' | 181' | 50 |
| | 44 | STC | F4 | 12¼" | 11,219' | 11,261' | 42' | 21 |
| | 45 | SEC | S86F | 12¼" | 11,261' | 11,491' | 230' | |
| | 46 | SEC | M44N | 8½" | 11,495' | 11,648' | 153' | 15 |
| | 47 | SEC | S86F | 8½" | 11,648' | 12,111' | 461' | 55¼ |
| | 48 | SEC | S86F | 8½" | 12,111' | 12,473' | 362' | 52¼ |
| | 49 | STC | L4HJ | 8½" | 12,473' | 12,503' | 30' | 8 |
| RR | 48 | SEC | S86F | 8½" | 12,503' | 12,624' | 486' | 74 |
| Pinched | 50 | STC | F4 | 8½" | 12,624' | 12,695' | 71' | 16½ |
| | 51 | HTC | J55R | 8½" | 12,695' | 12,842' | 147' | 26¼ |
| | 52 | HTC | J55 | 8½" | 12,842' | 13,046' | 204' | 23 |
| | 53 | STC | F57 | 8½" | 13,046' | 13,082' | 36' | 6 |
| | 54 | SEC | H88F | 8½" | 13,082' | 13,210' | 128' | 16 |
| | 55 | STC | F7 | 8½" | 13,210' | 13,437' | 227' | 28¼ |
| | 56 | STC | F7 | 8½" | 13,437 | Cemented @ 13,568' | 131' | |

## DAILY DRILLING CHRONOLOGY

| | | |
|---|---|---|
| 12/20/81 | | Level derrick; mud up; rig up rotary tools spud @ 8:45 P.M.; drlg. |
| 12/21/81 | | Drlg. and survey; work on Pump #1; trip for lost pump pressure. |
| 12/22/81 | 286' drilled | Drlg. |
| 12/23/81 | 25' drilled | Trip out w/Bit #1; trip in w/Bit #2; drlg. and survey. |
| 12/24/81 | 225' drilled | Drlg. and survey; repair swivel packing; drlg. and survey; trip for Bit #2; trip in w/Bit #3; drlg. |
| 12/25/81 | 118' drilled | Drlg. and survey; repair rod oiler on pumps; drlg.; trip out w/Bit #3. |
| 12/26/81 | 107' drilled | Trip in w/Bit #4; drlg.; repair Crown-o-matic; drlg. |
| 12/27/81 | 149' drilled | Drlg. and survey; short trip 3 stands; drlg. and survey. |
| 12/28/81 | 110' drilled | Drlg.; hole completed to 1020'; trip to pick up hole opener Bit #5; ream out of hole; pick up new tongs. |
| 12/29/81 | 0' drilled | Finish trip; rig up new tongs; thaw Kelley and stand pipe; reaming w/Bit #5; trip out for stabilizers. |
| 12/30/81 | 0' drilled | Trip in; wash and ream to btm.; repair water pump and rod oilers; open hole and ream; trip out - change BHA; trip in - ream and open hole. |
| 12/31/81 | 0' drilled | Ream and open hole; trip out to change BHA. |
| 1/1/82 | 0' drilled | Make up new BHA; trip in w/Bit #6; ream and open hole. |
| 1/2/82 | 0' drilled | Ream and open hole; circulate and survey; pump hi-vis pill/sweep, circulate out; pump pill and trip out; repair air compressor; finish trip out; rig up csg. crew; run in 20" csg. |
| 1/3/82 | 0' drilled | Run in 20" csg.; rig down csg. crew; rig up cementers - run cement; wait on cement. |
| 1/4/82 | 0' drilled | Wait on cement; rough cut csg.; final cut csg.; weld csg. head; nipple up. |
| 1/5/82 | 0' drilled | Nipple up BOP's; nipple down and wait on new spacer spool; nipple up. |

## DAILY DRILLING CHRONOLOGY CONT'D

| | | |
|---|---|---|
| 1/6/82 | 0' drilled | Nipple up BOP's and test tools; test hydril to 2000 PSI; nipple up flow nipple; change flow line height; nipple up drlg. nipple; trip in w/Bit #7; lost air compressor. |
| 1/7/82 | 0' drilled | Repair air compressor; trip in hole to float; drill through float; wash through csg. and tag shoe; drill shoe; change out air compressor; drlg. 12¼" hole. |
| 1/8/82 | 77' drilled | Drop survey, pump pill; trip out; make up BHA; work on air compressor; trip in w/Bit #8; ream to btm.; drlg. |
| 1/9/82 | 190' drilled | Drlg. and survey; repair brake; drlg.; circulate and survey; trip out 5 stds.; repair wash pipe packing. |
| 1/10/82 | 159' drilled | Trip in hole; drlg. and survey; trip out for washout drop survey; trip in to csg. Cut drlg. line. |
| 1/11/82 | 130' drilled | Cut and slip drlg. line; trip in - RR Bit #8 drlg.; repair clutch; drlg. and survey. |
| 1/12/82 | 239' drilled | Drlg. and survey. |
| 1/13/82 | 241' drilled | Drlg. and survey; drop survey and trip out; magnaflux HWP and D.C.'s. |
| 1/14/82 | 26' drilled | Change BHA; trip in w/Bit #9; drlg. and survey. |
| 1/15/82 | 292' drilled | Drlg. and survey. |
| 1/16/82 | 260' drilled | Drlg. and survey. |
| 1/17/82 | 242' drilled | Drlg. and survey. |
| 1/18/82 | 129' drilled | Drlg. and survey; drop survey and trip out; change BHA; trip in w/Bit #10; drlg. |
| 1/19/82 | 110' drilled | Drlg.; drop survey and trip out; trip in w/Bit #11; drlg. and survey; install wear sub; drlg. |
| 1/20/82 | 151' drilled | Drlg. and survey. |
| 1/21/82 | 153' drilled | Drlg. and survey. |
| 1/22/82 | 176' drilled | Drlg. and survey. |
| 1/23/82 | 122' drilled | Trip in w/Bit #12; drlg.; drop survey and trip out. |
| 1/24/82 | 88' drilled | Change BHA; trip in to csg.; cut and slip drlg. line; trip in w/Bit #13; drlg. |
| 1/25/82 | 142' drilled | Drlg. and survey. |
| 1/26/82 | 157' drilled | Drlg. and survey; trip out; repair windwall; trip in hole w/Bit #14; drlg. |

DAILY DRILLING CHRONOLOGY CONT'D

| | | |
|---|---|---|
| 1/27/82 | 25' drilled | Drlg.; trip out into csg.; work on light plant; inspect HWP and D.C.'s. |
| 1/28/82 | 0' drilled | Magnaflux D.C.'s; trip in and make up BHA; trip in. |
| 1/29/82 | 96' drilled | Trip in w/Bit #14 (rerun); drlg. and survey; repair rotary torque wheel; drlg. |
| 1/30/82 | 97' drilled | Drlg.; repair pump clutch; clean mud tanks; circulate; lost 500 bbls. new mud through arctic dump; build volume; drlg. |
| 1/31/82 | 20' drilled | Drlg.; repair pump; trip out for W.O. Lay down shock sub and Rmr.; trip in - no pump pressure; pump soft line - trip out; repair pump gauge on TOTCO; replace pump pressure gauge on standpipe; drlg. and survey. |
| 2/1/82 | 109' drilled | Drlg. and survey; repair pump clutch; drlg. and survey. |
| 2/2/82 | 240' drilled | Drlg. and survey. |
| 2/3/82 | 204' drilled | Drlg. and survey; circulate btms. up; drop survey and trip out; strap in hole w/Bit #16; wash and ream to btm.; drlg. |
| 2/4/82 | 115' drilled | Drlg.; repair wt. indicator; drlg. and work tight hole; drlg. and survey. |
| 2/5/82 | 176' drilled | Drlg. and work tight hole; drlg. and survey; work on TOTCO; drlg. |
| 2/6/82 | 221' drilled | Drlg.; trip out (work tight hole) trip in; ream 60' to btm.; drlg. |
| 2/7/82 | 98' drilled | Drlg. work tight hole; survey and drlg. |
| 2/8/82 | 205' drilled | Drlg.; circ. and trip out; parted pipe 44 stds. and single; screw into fish; work stuck pipe; trip out w/fish. |
| 2/9/82 | 27' drilled | Lay down bent D.P.; pick up fishing tools; trip in w/fishing tools (globe basket). |
| 2/10/82 | 0' drilled | Circulate out w/globe basket; run logs dil-sonic trip in w/BHA. |
| 2/11/82 | 0' drilled | Trip out; nipple down; run in 13-3/8" csg. (138 jts.); circulate csg. |
| 2/12/82 | 0' drilled | Circulate csg. Run in cement; wait on cement; cut csg. Lay down Kelly to be straightened; lay down collars. |
| 2/13/82 | 0' drilled | Nipple down; nipple up; run in hole to test BOP's. |
| 2/14/82 | 0' drilled | Nipple up BOP test tool; test choke line and choke house to 3500 PSI - OK.; pipe rams failed. |

DAILY DRILLING CHRONOLOGY CONT'D

| | | |
|---|---|---|
| 2/15/82 | 0' drilled | Pick up BHA; wait on BOP mechanic; work on BOP's. Test BOP's to 3500 PSI - OK; trip in; tag cement @ 5467' drlg. cement; test csg. and circulate. |
| 2/16/82 | 0' drilled | Circulate csg.; trip out to 2325; test csg. @ 2325 - OK. Trip out; pick up packer; run in to 5400 test csg. to 1000 PSI - OK. Held ½ hr.; trip out and lay down pkr.; pick up BHA and run in. Build mud volume; circ. cement; work on cones @ 5730. |
| 2/17/82 | 0' drilled | Trip out - rig repairs; run in w/magnet. Work magnet; pull out to clean magnet. Rec. 6 small pieces; run in hole w/magnet second run. Trip out - no recovery; trip in w/FBM. |
| 2/18/82 | 0' drilled | Run in w/mill; milling; trip out; lay down mill; pick up globe basket; top of fish 3' below csg. shoe; trip in; milling; trip out - lay down globe basket. |
| 2/19/82 | 0' drilled | Run in #2 w/globe basket; mill on cones; trip out w/bskt. - no recovery; run in hole w/flat mill; mill and beat on cones; nearly stuck pipe; pulled 30,000. |
| 2/20/82 | 0' drilled | Trip out; rec. 20 bearings in mill waterways; run in hole w/magnet No. 3; difficulty passing mill past shoe jt. @ 5683; work magnet; chain out; rec. 3 centralizer bow springs; run in hole w/globe basket; milling. |
| 2/21/82 | 0' drilled | Milling and beating w/globe basket; trip out w/mill; run in hole w/FBM; milling; trip out - rec. 7 roller brgs. and centralizer; knocked upper cone into hole; pick up poor boy jnk. basket. |
| 2/22/82 | 0' drilled | Trip in; work on rubber @ 5683' - work over fish; chain out; no recovery; run in w/FBM #4; mill on rubber (stabilizer?) |
| 2/23/82 | 0' drilled | Milling and beating w/FBM #4; trip out; rec. 19" cent. bow springs; trip in w/magnet #4 (strap in) rotate past 5683'; work magnet; chain out; rec. 4 pieces bow spring; rig up McCullough - run CCL - does not correlate to pipe tally. |
| 2/24/82 | 0' drilled | Run McCullough CBL/GR, CCL. Logs show csg. parted @ 5658'; (pipe tally shows 5686); pick up tapered mill; run in hole to tight spot @ 5683 - work tight spot; milling on junk; trip out - rec. broken centralizer; |

DAILY DRILLING CHRONOLOGY CONT'D

| | | |
|---|---|---|
| 2/24/82 cont'd. | | 5 roller brgs., 1 cone; run in hole w/magnet and boot basket; magnet will not pass 5683. |
| 2/25/82 | 0' drilled | Try to work through tight spot; trip out; trip in w/tapered Mill #2; work on tight spot; mill on junk @ 5730; trip out; rec. 1/2 centralizer, roller ball; roller brgs., etc. |
| 2/26/82 | 0' drilled | Run in cavins junk catcher; work through 5683'; could not reach btm.; trip out; run McCullough GR/CCL tool will not pass 5676 (WL depth); spud to 5681 (WL) stuck tool 3 times; pick up 12" OD FBM; run in and work through 5683 mill on junk; trip out - rec. 1 ball roller - mill bald. Pick up junk catcher. Run in hole. |
| 2/27/82 | 0' drilled | Operate tool on btm; made 1 ft.; chain out - no rec. Run in hole w/tapered mill; milling and circ. |
| 2/28/82 | 0' drilled | Trip out - small recovery; pick up alignment tool w/EZ drill packer/poppit valve; push tool into hole first 100' - tool would not pass 317'; trip out; pckr. tension sleeve sheared - left alignment tool in hole. Run in hole w/spear; rec. 13½' of pckr. Fish for remaining pckr. section; pick up larger grapple. |
| 3/1/82 | 0' drilled | Run in hole w/spear and grapple; trip out - grapple missing; run in hole w/magnet; rec. grapple and 3 pckr. slips. |
| 3/2/82 | 0' drilled | Fishing for pckr. w/magnet; run petrolog CCL for depth correlation; pckr. at 5664. |
| 3/3/82 | 0' drilled | Tag pckr. @ 5664 - milled 2½'. |
| 3/4/82 | 0' drilled | Milling on fish; caught fish and work out of parted csg. - dropped twice; trip out - break out fish - trip in and spot 30 bbls. of water on btm.; trip out. |
| 3/5/82 | 0' drilled | Report missing. |
| 3/6/82 | 0' drilled | EZSV to btm. and sting out; sting in to EZSV and cement w/200 sacks of cement and squeeze; attempt to sting out; pulled 310,000 - work pipe and try to rotate @ free pt.; manually backed off - left 5 jts. of heavy wt. pipe; top of fish @ 5522; wait on cement. |
| 3/7/82 | 0' drilled | Trip out; run in hole w/new BHA; tag up @ 5508; wash to hard cement @ 5519; milling in cement and tool jt. Trip out w/bald flat mill; trip in w/BHA. |

DAILY DRILLING CHRONOLOGY CONT'D

| | | |
|---|---|---|
| 3/8/82 | 0' drilled | Run in hole w/Burn Shoe #2; mill over tool jt.; washover HW from 5524-5590; run in hole to 5625 - no cement; repair pump clutch; mill on mid-section of HW - no progress; repair rig; trip out w/Burn Shoe #2; pick up new Burn Shoe #3 and 2 jts. wash pipe. Burn over pipe. |
| 3/9/82 | 0' drilled | Chain out w/Burn Shoe #3; pick up 2 jts. wash pipe; mill on center section of HW - cement below - 5626.6 (depth corrected to 5657.95). Lay down 6 singles; pressure test csg. to 1500 PSI - held 5 min. - OK. Trip out w/Burn Shoe #3; change out Burn Shoe; run in hole w/Burn Shoe #4; ream over fish to 5626.5 (corrected to 5657.95). |
| 3/10/82 | 0' drilled | Burn over fish to 5661.95; rig repairs; burn over fish to 5663; packer @ 5678; setting tool @ 5674.25; trip out; rotate wash pipe; replace burn shoe and trip in w/Shoe #5; wash over fish. |
| 3/11/82 | 0' drilled | Wash over fish 5441-5660; wash over to 5663; wash over to 5667.3; high torque while milling; pull 4 wet singles; slip drlg. line; run in hole; lay down all G pipe. |
| 3/12/82 | 0' drilled | Pick up "E" singles to tag fish; screw into fish - pull 30,000; back off; pick up single and torque pipe. Rig up petrolog - run free pt.; work through 5522; pick up spud assembly and spud to 5584; trip out; pick up poor boy core barrel and hit 5585; trip out - rec'd. crumbled cement; run in hole w/spud assembly to 5588; repair master clutch; manually backed off string w/3 turns; work torque down string; String Shot #1 - failed; #2 back off; trip out w/fish; recovered 2 jts. HW; make up new BHA. |
| 3/13/82 | 0' drilled | Clean V-door; run in hole w/Burn Shoe #6; washover fish from 5527-5667; mill on fish from 5667-5670.5; rig repair; mill on fish 5670.5-5671; rig repair; mill on fish 5671-5675.5; trip out. |
| 3/14/82 | 0' drilled | Trip out w/Burn Shoe #6; run in hole w/Burn Shoe #7; wash to btm.; lay down 2 bad jts.; mill to packer @ 5677; chain out and lay down Burn Shoe #7; make up BHA and run in hole w/jar assembly; screw into fish and jar 100,000#. |
| 3/15/82 | 0' drilled | Jar on fish; rig down kelly hose and gooseneck; wait on wireline truck; rig up wireline and wait on operator; sinker bar run to 5586'. String shot run - misfire; string shot #2 back off @ 5282; rig down loggers; POOH w/jars; make up new BHA & run in hole; rig up gooseneck, washover fish and work on packer. |

DAILY DRILLING CHRONOLOGY CONT'D

| | | |
|---|---|---|
| 3/16/82 | 0' drilled | Milling on packer w/Burn Shoe #8; replace rotary chain; mill over packer to 5685. Trip out. |
| 3/17/82 | 0' drilled | Run in hole w/Burn Shoe #9; repair pump clutch; wash and ream to 5686; recovered brass and rubber; stuck wash pipe on btm.; worked free w/torque; milling to 5688'; POOH; lay down all wash pipe; pick up jar assembly; run in hole to fish and screw in. |
| 3/18/82 | 0' drilled | POOH w/fish - lost fish; pick up 6-3/8" grapple; run in hole to engage fish; POOH - recovered 3 jts. HW and 44" EVSV pkr.; pick up wash pipe; lay down fish; washpipe thread protector fell in hole while making up tools. |
| 3/19/82 | 0' drilled | Washover fish and circulate mud sweeps to clean hole; tag fish @ 5678; mill to 5686; POOH w/bald mill; pick up boot basket; run in hole and mill on rubber; POOH. |
| 3/20/82 | 0' drilled | POOH w/wavy btm. mill; remove float valve; run in hole w/Mill #12; tag up @ 5678; mill to 5699; chain out; mill 90% worn; wait on mill and run in hole. |
| 3/21/82 | 0' drilled | Run in hole w/Mill Burn Shoe #13; tag up @ 5675½; mill to 5696.5; burn shoe wouldn't pass 5696½. Spudded on tool; POOH - first 36 stds. wet; pickup 10" overshot w/11-3/4" mill; run in hole and tag @ 5683; milled to 5691 - pulled on fish; trip out - 35 wet stds.; run in w/10" grapple. |
| 3/22/82 | 0' drilled | Run in hole w/#2 10" grapple; work over fish; would not pass 5683; work fish - COOH; no recovery; grapple turned upside down and broke in half; W.O. orders; P.U. 9-7/8" grapple and run in hole; work over fish; set at 5695; POOH; grapple broken - no fish; pick up burn shoe and auto. leaf grapple; run in hole. |
| 3/23/82 | 0' drilled | Tag fish @ 5684; slid shoe to 5695; worked grapple over fish; recovered 11'7" aluminum D.P.; rig up McCullough - run CBL/VDL/GR/CCL - VDL didn't work; rig down - lay down fishing tools; rig up new VDL; pick up Baker retainer and run in hole. |
| 3/24/82 | 0' drilled | Run in hole w/retainer; correlate CCL to March 24th CCL; rig down McCullough; pick up Baker stinger and run in hole; stab in to retainer; tested annulus to 1000 PSI - held OK; rig up dowell - squeeze to 2000 PSI; POOH; |

DAILY DRILLING CHRONOLOGY CONT'D

| | | |
|---|---|---|
| 3/24/82 cont'd | | repair rig; pick up BNA; run in hole; drill out cement retainer @ 5670; circulate well bore; POOH for concave mill; work on air compressor. |
| 3/25/82 | 0' drilled | Finish trip out; change out compressor; run in hole w/Concave Mill #1; tag up @ 5691.5; mill to 5697.5; mill quit drlg.; POOH. |
| 3/26/82 | 0' drilled | Finish trip out; wait on McCullough; rig up and run electronic csg. internal diameter log; tool would not pass 5656 WLD; spudded tool to 5656; POOH; log shows csg. wear from 5500-5656; adjust centralizers and rerun log; POOH; run CCL; stopped @ 5683 - spudded to 5695½. Poss. csg. parted 5684-5682; csg. worn from 5682-5504; pick up new BHA and concave mill (RR #1) tag up @ 5695 - mill to 5699. |
| 3/27/82 | 0' drilled | Mill 5699-5706; mill 5706-5710.5; POOH; pick up Concave Mill #2 and run in hole. |
| 3/28/82 | 0' drilled | Work mill @ 5683; mill will not pass; pick up taper mill and watermelon mill; run in hole and work mills @ 5683; tag tool @ 5708; mill 1 hour on align. tool; TOOH; pick up 8 bladed mill and BHA and run in hole. |
| 3/29/82 | 0' drilled | Run in hole; work 8-bladed mill @ 5683; will not pass; spudded - will not drill off. |
| 3/30/82 | 0' drilled | Report missing. |
| 4/1/82 | 0' drilled | Drill out cmt.; run CBL; pressure test csg. |
| 4/2/82 | 0' drilled | Run in hole and tag cement. |
| 4/3/82 | 0' drilled | Drlg. cement and washing down; circ. and run sweeps; run CBL - good bond; pick up csg. cutter and cut csg. |
| 4/4/82 | 0' drilled | Milling on csg.; POOH w/Mill #1; pick up #2 and run in hole; milling on csg. w/Cutter #2. |
| 4/5/82 | 0' drilled | Milling w/csg. Cutter #2; COOH; pick up cutter #3; run in hole; milling; TOOH w/#3; pick up Cutter #4 and run in hole. |
| 4/6/82 | 0' drilled | Milling w/Cutter #4. |
| 4/7-4/10/82 | 0' drilled | Cut window. |
| 4/10/82 | 0' drilled | Set cement plug. |
| 4/11/82 | 0' drilled | Wait on cement; drlg. cement top @ 5453. |
| 4/14/82 | 0' drilled | Drlg. and circ.; rig down wireline; chain out of hole; service rig; change BHA; trip in laydown 18 jts. Trip in w/Bit #21 sec. M44N 8-3/4"; try to unplug bit; trip out; |

## DAILY DRILLING CHRONOLOGY CONT'D

| | | |
|---|---|---|
| 4/14/82 cont'd | | pick up BHA and T.I.H.; break circ. and ream dyna drilled hole; drlg. |
| 4/15/82 | 0' drilled | Drlg. and circ.; survey - magnetic interference; drlg. 8-3/4" hole to 5700'. Trip out for hole opener; lay down 8-3/4" tools; pick up new BHA and trip in hole; break circ. and open hole. |
| 4/16/82 | 0' drilled | Open 12¼" hole; circ. and trip out to change BHA; trip in and open hole; service rig; open hole; trip out for hole opener; magnaflux D.C.'s; cut drlg. line. |
| 4/17/82 | 0' drilled | Pick up new BHA; trip in w/bullnose; ream and open hole; trip out; left 1½ cones on btm.; wait on magnet and make up BHA. Wait on fishing tools; T.I.H.; fish for cones; trip out w/chain; break down fishing tools; pick up BHA. |
| 4/18/82 | 0' drilled | Pick up BHA; trip in hole w/Bit #22. Ream and open hole above fish; circ. over fish; chain out; pick up boot basket and magnet; trip in; work magnet @ 5701; chain out w/ magnet; lay down fishing tools; retrieve cones; pick up BHA and T.I.H.; break circ. and drlg. |
| 4/19/82 | 27' drilled | Drlg. and survey; drop survey and trip for bit; lay down BHA; pick up BHA and trip in hole; ream tight hole @ 5669-5714; trip in. |
| 4/20/82 | 93' drilled | Ream 5714-5773; drlg. and survey; service rig; drlg. and survey. |
| 4/21/82 | 185' drilled | Circ. and survey; 2 misruns; drlg. and survey; circ. and trip out; RR Bit #23; T.I.H. |
| 4/22/82 | 83' drilled | Trip in w/Bit #23; drlg.; rig service; drlg. and survey (misrun); drlg. |
| 4/23/82 | 107' drilled | Drlg. and survey; drop survey and trip out; make up BHA and T.I.H.; break in bit; drlg. |
| 4/24/82 | 140' drilled | Drlg. and survey; re-tie geolograph line; drlg. |
| 4/25/82 | 147' drilled | Drlg. and survey; drop survey and trip out; dress bit and trip in; cut drlg. line; trip in; drlg. |
| 4/26/82 | 100' drilled | Drlg.; rig service; drlg. and survey; drlg. |
| 4/27/82 | 156' drilled | Drlg., rig service; rig up TOTCO RPM pulley; drlg. |

DAILY DRILLING CHRONOLOGY CONT'D

| | | |
|---|---|---|
| 4/28/82 | 125' drilled | Drlg. and survey; drill off test; drop survey and pump pill; T.O.O.H.; dress Bit #26 and run in hole. Pick up HW DP. |
| 4/29/82 | 96' drilled | Trip in hole; rearrange drill pipe rubbers. Break in bit; drlg. and survey; service rig; drlg. and survey. |
| 4/30/82 | 202' drilled | Drlg., service rig; circ. and survey; drlg. |
| 5/1/82 | 178' drilled | Drlg.; work out high torque; drlg.; circ. and drop survey; trip out; pick up BHA and bit; trip in hole; wash 30' to btm. - no fill; break in bit; drlg. |
| 5/2/82 | 96' drilled | Drlg. and survey; service rig; drlg. |
| 5/3/82 | 171' drilled | Drlg.; circ. and survey; (misrun); service rig; drlg.; circ. and pump sweep; drop survey and trip out; drag on BHA through sidetrack; pick up bit and BHA and trip in. |
| 5/4/82 | 54' drilled | Trip in; break circ. and ream 7596-7665; hit 24' fill; drlg. and survey; service rig; drlg. and survey (misrun). |
| 5/5/82 | 127' drilled | Drlg. and survey (misrun); service rig; drlg. and survey. |
| 5/6/82 | 145' drilled | Drlg. and survey; service rig; drop survey; trip out; inspect collars; lay down one cracked 9" DC; test BOP. |
| 5/7/82 | 46' drilled | Jet cellar; test BOP; set wear ring; pick up BHA; trip in; wash and ream 10' to bottom. |
| 5/8/82 | 147' drilled | Drlg.; circulate and survey; drlg. |
| 5/9/82 | 180' drilled | Short trip; wash and ream 8216 to 8370. |
| 5/10/82 | 200' drilled | Drlg.; short trip, 5 stds., wash and ream 8469 to 8531. |
| 5/11/82 | 102' drilled | Trip in hole; wash and ream 120' to bottom; drlg.; circulate and run survey; drlg. |
| 5/12/82 | 258' drilled | Drlg.; work tight hole @ 8891, drlg., short trip; drlg.; circulate and survey; drlg. |
| 5/13/82 | 220' drilled | Drlg.; circulate; trip out. |
| 5/14/82 | 123' drilled | Trip out; pull survey, change bit; trip in; break circulation; drlg.; break in bit; drlg.; service rig; jet cellar, short trip; circulate, trip in, wash and ream 8000' to 8071', tight hole. |
| 5/15/82 | 63' drilled | Wash and ream; trip in 3 stds.; tight hole; wash and ream; drlg. |

## DAILY DRILLING CHRONOLOGY CONT'D

| | | |
|---|---|---|
| 5/16/82 | 212' drilled | Circ. to short trip; pull 20 stds.; (pulled tight). Trip in washing and reaming; 9537-9581; drlg.; circ. - trip out; change out BHA. |
| 5/17/82 | 74' drilled | Trip in w/Bit #32; wash and ream 120' to btm. (no fill); drlg. and survey; drlg. (high torque). |
| 5/18/82 | 96' drilled | Drlg.; trip for bit; change BHA; trip in washing and reaming; 25' fill; drlg. |
| 5/19/82 | 170' drilled | Drlg.; circ. and survey; rig service; drlg. |
| 5/20/82 | 57' drilled | Drlg.; circ. and drop survey; trip for bit; tight @ 6398-6776; trip out and change BHA; trip in; cut 100' drlg. line. |
| 5/21/82 | 39' drilled | Cut drlg. line; trip in; wash and ream 65' to btm. No fill - tight hole; drlg. and service pump. |
| 5/22/82 | 68' drilled | Drlg.; drop survey; work tight hole; repair wt. indicator and #2 pump clutch; trip out; change out IBS and 6 pt. Trip in; tight @ 9250, ream 9250-9772. |
| 5/23/82 | 32' drilled | Ream 9772-10028; drlg.; weld on mudline; drlg. |
| 5/24/82 | 139' drilled | Drlg.; short trip 10 stds.; ream and work on drum clutch. |
| 5/25/82 | 101' drilled | Repair drum clutch; ream; drlg.; weld on mud line; drlg. |
| 5/26/82 | 85' drilled | Drlg.; trip out and magnaflux DC's; inspect BHA; trip in; wash and ream 100' to btm.; no fill; drlg. |
| 5/27/82 | 80' drilled | Drlg.; drop survey and trip out. |
| 5/28/82 | 18' drilled | Finish trip out; cut drlg. line; W.O. magnet; Trip in w/magnet; repair airline to drum clutch; trip in and fish for bit junk; trip out; lay down magnet; trip in w/Bit #37; wash 60' to btm.; no fill; drlg. |
| 5/29/82 | 22' drilled | Drlg. |
| 5/30/82 | 94' drilled | Drlg.; trip for bit; trip in w/bit. |
| 5/31/82 | 26' drilled | Trip in w/Bit #38; wash and ream 90' to btm.; no fill; drlg.; service rig; drlg. |
| 6/1/82 | 89' drilled | Drlg.; lost PP; P.O.O.H; change out shock sub; trip in w/Bit #39; rig service; work junk basket; drlg.; lost PP; trip out. |
| 6/2/82 | 18' drilled | Trip out; lay down 2 9" DC's; trip in w/collars; cut drlg. line; trip in to 9460; ream tight hole; (9460-9630); trip for washout; relocate all D.P. rubbers. |

## DAILY DRILLING CHRONOLOGY CONT'D

| | | |
|---|---|---|
| 6/3/82 | 0' drilled | Trip out; lay down all 9" D.C.'s; lay down junk sub; inspect BHA; pick up new 9" D.C.'s; trip in to csg.; salt up mud system and circ. @ 5300; rig repair. |
| 6/4/82 | 0' drilled | Trip in w/Bit #40; ream 9450-10731; drlg.; high torque; ream; drlg. |
| 6/5/82 | 78' drilled | Drlg.; drop survey and trip out; work out tight hole; trip in w/Bit #41; change out 6 pt. reamer; cut drlg. line 100'; trip in. |
| 6/6/82 | 40' drilled | Fill pipe; ream 10' to btm.; no fill; break in bit; drlg.; weld on mudline; drlg. |
| 6/7/82 | 83' drilled | Drlg.; short trip 20 stds.; ream 70' to btm.; drlg., drop survey and trip out. |
| 6/8/82 | 29' drilled | Trip in w/Bit #42; wash and ream 35' to btm.; 5' fill; break in bit; drlg. |
| 6/9/82 | 70' drilled | Drlg.; trip for bit; trip in w/Bit #43; wash and ream 35' to bottom, 5' fill; drlg. |
| 6/10/82 | 39' drilled | Drlg.; chain out for washout; lay down washed out D.C.'s; replace shock sub; pick up BHA and T.I.H.; cut drlg. line 100'. Trip in; ream; drlg. |
| 6/11/82 | 40' drilled | Drlg.; rig service; drlg. |
| 6/12/82 | 94' drilled | Drlg.; trip for bit; check BOP's; dress bit; pick up BHA; trip in; wash and ream 25' - no fill; break in bit; drlg. |
| 6/13/82 | 57' drilled | Drlg.; short trip 62 stds.; circulate and build chlorides; trip for E-logs. |
| 6/14/82 | 15' drilled | Finish trip out; rig up Schlumberger; logging. |
| 6/15/82 | 0' drilled | Logging; rig down Schlumberger; pick up Bit #45; change out jars; trip in; wash and ream 50'; drlg.; circ. and salt saturate mud. |
| 6/16/82 | 87' drilled | Saturate mud; drlg.; ream tight hole @ 11290; drlg. lost 120 bbls. @ salt bottom (11322). |
| 6/17/82 | 120' drilled | Drlg. to 11491 (depth corr'c SLM 11495); circ. and trip to run csg. |
| 6/18/82 | 0' drilled | Prepare to run csg. @ 11495; cut drlg. line; rig up casers; run csg. |
| 6/19/82 | 0' drilled | Run csg.; circ. csg.; cement csg.; nipple down and cut csg. |
| 6/20/82 | 0' drilled | Nipple up and test BOP's; trip in and magnaflux DC's and HWDP. Inspect all BHA; drill deeper rat hole. |

DAILY DRILLING CHRONOLOGY CONT'D

| | | |
|---|---|---|
| 6/21/82 | 0' drilled | Finish drlg. rat hole; change out kelly; pick up BHA; trip and strap in; tag cement @ 11325-11333; drlg. float collar @ 11333. |
| 6/22/82 | 0' drilled | Drlg. cement to 11495; survey and clean tanks; change over to lightly dispersed mud; drlg.; trip out. |
| 6/23/82 | 153' drilled | Finish trip out; run CBL; top cement @ 8230; shoe @ 11410; pick up BHA; trip in hole; ream 30' to bottom; drlg. and survey (misrun). |
| 6/24/82 | 85' drilled | Drlg. and survey. |
| 6/25/82 | 204' drilled | Drlg. and survey. |
| 6/26/82 | 162' drilled | Drlg. (high torque); pump pill; drop survey; POOH; trip in - wash and ream 60' to bottom (8' fill); drlg. and survey - misrun. |
| 6/27/82 | 60' drilled | Drlg. and survey. |
| 6/28/82 | 161' drilled | Drlg.; run survey and circ. hole; wait on orders; POOH to shoe; ream to bottom; high torque; drlg. |
| 6/29/82 | 119' drilled | Drlg.; circ. and survey; circ. and trip out; RR Bit #48; repair drum; trip in - wash and ream to bottom - no fill; drlg. w/high torque. |
| 6/30/82 | 34' drilled | Run GR/CCL log; pick up watermelon mill; run in hole; ream 12010-12473; drlg. and survey (boundary ridge cvgs.) |
| 7/1/82 | 15' drilled | Drlg. and survey; POOH for bit; change BHA; cut drlg. line; run in hole. |
| 7/2/82 | 42' drilled | Drlg. and survey (misrun); drlg. and survey (misrun - high vis. mud); drlg. + condition mud; drlg. and ream for high torque. |
| 7/3/82 | 94' drilled | Short trip 5 stds.; work tight hole; short trip 14 stds.; service rig; trip in - stuck 6 times; trip out and change BHA; RIH; stuck @ 12595; work pipe; POOH. |
| 7/4/82 | 0' drilled | POOH; lay down 1BS and 3 pt. RMR; RIH to shoe; repair rotary clutch; trip in to 12416; wash and ream; work tight hole to 12625; drlg. |
| 7/5/82 | 6' drilled | Drlg.; short trip 5 stds.; ream 22' fill; drlg. w/high torque; work pipe and pump high weight pill to make conn.; drlg.; short trip 5 stds.; ream to bottom; pump pill and drop survey; POOH. |
| 7/6/82 | 64' drilled | Drlg.; short trip 5 stds.; bridge @ 12599; wash to bottom; circ. and spot 10.0#/gal pill on btm.; drop survey; trip out; rig repair; |

DAILY DRILLING CHRONOLOGY CONT'D

| | | |
|---|---|---|
| 7/6/82 cont'd | | magnaflux D.C.'s; cut drlg. line; dress bit and pick up BHA; RIH; lay down 8 jts. to ream. |
| 7/7/82 | 0' drilled | Ream; drlg.; attempt short trip; drlg.; pump out 2 singles; ream; drlg. (70% cvgs.); circ. bottoms up. |
| 7/8/82 | 95' drilled | Circ. smples; short trip; reamed off btm.; drlg.; rig service; drlg.; pump pill and drop survey; short trip 15 stds. to retrieve survey; trip out for bit; lay down 3 pt.; pick up 6 pt.; RIH. |
| 7/9/82 | 52' drilled | Ream 4 jts. to btm.; drlg., pump pill and drop survey; pull out to shoe to retrieve survey; RIH; drlg. |
| 7/10/82 | 159' drilled | Drlg.; drop survey; trip 17 stds. and retrieve survey - misrun; trip out for bit; change out BHA; TIH; ream 12988-13046; drlg. |
| 7/11/82 | 72' drilled | Drlg.; drop survey; pull 17 stds. - could not retrieve; POOH and change BHA; cut drlg. line; trip in; ream and break in bit; drlg. |
| 7/12/82 | 63' drilled | Drlg. and survey - misrun; drlg. and resurvey - misrun; drlg. w/high torque; trip out; change bit; RIH. |
| 7/13/82 | 74' drilled | Drlg.; lost PP; drop survey and COOH; shock sub washed out; monel bent; cut drlg. line; service rig; wait on new monel; RIH; wash and ream 75'; drlg.; lost approx. 210 bbls. mud. |
| 7/14/82 | 51' drilled | Drlg.; losing mud (approx. 330 bbls.); survey; drlg.; lost 100 bbls.; trip out. |
| 7/15/82 | 176' drilled | POOH; pick up new BHA; RIH; break in bit and ream to btm.; drlg., stuck for 1½ hrs. @ 13472'; ream; lost 500 bbls. mud. |
| 7/16/82 | 41' drilled | Drlg.; occasional torque; stuck pipe @ 13568; worked up 15'; will not move up or down. |
| 7/17/82 | 0' drilled | Working stuck pipe. |
| 7/18/82 | 0' drilled | Attempt to fire jars; pump 20 bbls. across BHA; work torque down pipe; jars will not fire; pump diesel to 11868; circ. and work pipe; spot 20 bbls. "free pipe" across BHA; rig up VACCO - run free pt.; free at 12574; stuck @ 12583; rig down wireline - jars work; jar and work pipe every 30 min. |
| 7/19/82 | 0' drilled | VACCO free pt. tool failed; release VACCO; circ. hole and jar pipe; rig up McCullough; fire nozzle charge to bust jets; run free pt.; free @ 12380; stuck in HW pipe; rig up Kelly |

## DAILY DRILLING CHRONOLOGY CONT'D

| | | |
|---|---|---|
| 7/19/82 cont'd | | and work jars; POOH; run string shot to 1 collar below jars; fired twice; backed off; recovered 9 HW, 3 DC's; lay down fish and pick up fishing tools. |
| 7/20/82 | 0' drilled | Pick up BHA; cut drlg. line; RIH 22 stds.; rig up gooseneck; pump 300 bbls. fresh water into annulus; valve open; water went down D.P.; pump out pill; condition mud in hole; trip in and tag fish @ 12968; screw in - jar fish and circ. hole; rig up NOWSCO; pressure test to 3000 PSI.; mix Black Magic pill; displace pill; chase w/mud; pump $N_2$ Stage 1; displace 54 bbls. mud w/$N_2$; jar 1/4 hr.; no movement; displace w/$N_2$ - Stage 2. |
| 7/21/82 | 0' drilled | Continue displace w/$N_2$; jar after each displacement; rig up McCullough; run free pt.; free to second collar; pump $N_2$; max. pressure 2750; bled back to 2450; flowed for 15 sec. Recovered total of 123 bbls. mud; blow down $N_2$; rig down NOWSCO; jar on fish; rig up for free pt.; free @ 13525; rig up for string shot; fired twice in spiral above monel. |
| 7/22/82 | 0' drilled | Run back off shot to crows ft. and attempt back off @ 13526; did not back off; attempt @ 13498; POOH tightening loose drill string; worked through tight spot @ 12400; recovered fish; pick up BHA and RIH. |
| 7/23/82 | 0' drilled | Run in hole; circ. csg. to cond. mud; tag btm. @ 13492.5 6' fill washed down; tight @ 13124; circ. gas cut mud; condition hole; POOH 22 stds.; RIH and circ.; chain out; wait on Schlumberger; rig up and begin logging. T.D. 13492 driller's depth. |
| 7/24/82 | 0' drilled | Running E-logs. T.D. Schlumberger 13487. |
| 7/25/82 | 0' drilled | Finish E-logs; geologist released. |

## MUD RECORD

| DATE | DEPTH | WT | F.VIS. | PH | FILTR. | CK | CHLOR. | SD | SOLIDS | CAL | PV | YP |
|---|---|---|---|---|---|---|---|---|---|---|---|---|
| 1/20 | Spud | | | | | | | | | | | |
| 1/21 | Spud | 8.7 | 32 | 9.5 | 42 | 3 | 700 | | 2.5 | | | |
| 1/22 | 270 | 8.8 | 36 | 9.5 | 26 | 3 | 700 | | 3.2 | | | |
| 1/23 | 382 | 8.9 | 51 | 9.0 | 39 | 3 | 800 | | 4.7 | | | |
| 1/24 | 575 | 9.2 | 35 | 9.0 | 29 | 2 | 1000 | | 6.1 | | | |
| 1/25 | 674 | 9.2 | 37 | 9.0 | 31 | 3 | 900 | | 6.0 | | | |
| 1/26 | 842 | 9.1 | 38 | 10.0 | 19 | 3 | 600 | | 5.6 | | | |
| 1/27 | 919 | 9.2 | 37 | 9.0 | 20 | 2 | 700 | | 6.3 | | | |
| 1/28 | Ream hole to 26" @ 1023 Run 20" @ 1008 Nippling up | | | | | | | | | | | |
| 1/5 | 1023 | 9.4 | 42 | 9.0 | 11.8 | 2 | 6700 | | 7.7 | 40 | 14 | 8 |
| 1/6 | Nipple up and test hydril | | | | | | | | | | | |
| 1/7 | Tag cement @ 922 Drill out float and shoe | | | | | | | | | | | |
| 1/8 | No report | | | | | | | | | | | |
| 1/9 | 1302 | 9.05 | 38 | 9.0 | 8.9 | 2 | 700 | ¼ | 4.8 | 50 | 11 | 7 |
| 1/10 | 1481 | 9.25 | 39 | 10.0 | 10.2 | 2 | 1000 | ¼ | 6.1 | 100 | 12 | 6 |
| 1/11 | No report | | | | | | | | | | | |
| 1/12 | 1859 | 9.65 | 41 | 10.0 | 7.9 | 2 | 1000 | ¼ | 9.1 | 100 | 15 | 9 |
| 1/13 | 2067 | 9.8 | 41 | 9.5 | 7.8 | 2 | 1100 | ½ | 10.1 | 100 | 15 | 7 |
| 1/14 | 2198 | 9.65 | 37 | 9.5 | 8.0 | 2 | 900 | ¼ | 9.2 | 100 | 11 | 4 |
| 1/15 | 2457 | 9.7 | 35 | 10.0 | 9.7 | 2 | 1200 | ¼ | 9.8 | 40 | 10 | 5 |
| 1/16 | 2713 | 9.65 | 35 | 10.0 | 9.7 | 2 | 1200 | ¼ | 9.5 | 40 | 12 | 3 |
| 1/17 | 2961 | 9.45 | 40 | 10.0 | 8.3 | 2 | 900 | ¼ | 8.4 | 40 | 13 | 10 |
| 1/18 | 3101 | 9.65 | 35 | 8.5 | 10.4 | 2 | 850 | ¼ | 9.7 | tr | 11 | 4 |
| 1/19 | 3177 | 9.65 | 41 | 9.5 | 8.2 | 2 | 1100 | ¼ | 9.1 | 50 | 14 | 9 |
| 1/20 | 3357 | 9.65 | 40 | 10.0 | 8.5 | 2 | 1000 | ¼ | 9.6 | 40 | 14 | 6 |
| 1/21 | 3520 | 9.5 | 42 | 10.0 | 9.3 | 2 | 1000 | tr | 8.3 | 50 | 15 | 7 |
| 1/22 | 3675 | 9.4 | 40 | 10.0 | 9.2 | 2 | 1100 | .125 | 7.6 | 60 | 14 | 6 |
| 1/23 | 3793 | 9.45 | 42 | 10.0 | 8.4 | 2 | 1100 | tr | 7.7 | 60 | 15 | 9 |
| 1/24 | 3865 | 9.3+ | 41 | 10.0 | 8.4 | 2 | 1000 | tr | 7.4 | 80 | 14 | 9 |
| 1/25 | 4018 | 9.5 | 45 | 10.0 | 8.5 | 2 | 1000 | ¼ | 8.4 | 80 | 17 | 17 |
| 1/26 | 4097 | 9.5 | 41 | 10.0 | 8.6 | 2 | 1000 | .125 | 8.4 | 120 | 12 | 9 |
| 1/27 | 4122 | 9.7 | 46 | 9.0 | 8.2 | 2 | 700 | ¼ | 10.1 | 120 | 18 | 9 |
| 1/28 | 4122 | 9.4 | 41 | 8.0 | 9.2 | 2 | 600 | tr | 7.4 | 80 | 16 | 7 |
| 1/29 | 4217 | 9.6 | 41 | 9.0 | 7.5 | 2 | 800 | tr | 8.8 | --- | 15 | 6 |

MUD RECORD CONT'D

| DATE | DEPTH | WT | F.VIS. | PH | FILTR. | CK | CHLOR. | SD | SOLIDS | CAL | PV | YP |
|---|---|---|---|---|---|---|---|---|---|---|---|---|
| 1/30/82 | 4323 | 9.6 | 42 | 9.0 | 7.9 | 2 | 900 | tr | 8.8 | 80 | | 11 |
| 1/31 | 4335 | 9.2 | 37 | 9.0 | 8.6 | 2 | 800 | tr | 6.0 | 80 | 13 | 4 |
| 2/1 | 4530 | 9.4 | 42 | 10.1 | 8.0 | 2 | 850 | .2 | 7.9 | 80 | 17 | 10 |
| 2/2 | 4755 | 9.4 | 43 | 9.6 | 7.7 | 2 | 800 | .3 | 7.8 | 70 | 19 | 15 |
| 2/3 | 4896 | 9.35 | 44 | 10.0 | 8.0 | 2 | 800 | .2 | 7.5 | 70 | 19 | 12 |
| 2/4 | 5050 | 9.3 | 41 | 10.0 | 8.4 | 2 | 800 | .2 | 6.9 | 60 | 16 | 8 |
| 2/5 | No report | | | | | | | | | | | |
| 2/6 | 5399 | 9.35 | 48 | 10.5 | 8.5 | 2 | 900 | .25 | 6.9 | 60 | 17 | 21 |
| 2/7 | 5611 | 9.3 | 39 | 10.0 | 8.2 | 2 | 800 | tr | 7.1 | - | 12 | 5 |
| 2/8 | Reports not taken while fishing 2/8 - 4/15/82 | | | | | | | | | | | |
| 4/15 | 5670 | 8.7 | 42 | 10.0 | 14.1 | 2 | 950 | .25 | 2.5 | tr | 11 | 6 |
| 4/16 | 5700 | 8.7 | 45 | 11.0 | 11.2 | 2 | 850 | .25 | 2.5 | tr | 13 | 9 |
| 4/17 | 5679 | 8.7 | 39 | 11.0 | 10.6 | 2 | 700 | .25 | 2.5 | 20 | 10 | 7 |
| 4/18 | 5703 | 8.7 | 42 | 10.5 | 10.4 | 2 | 700 | .20 | 2.5 | tr | 10 | 9 |
| 4/19 | 5768 | 8.7 | 41 | 10.5 | 9.8 | 2 | 700 | .20 | 2.5 | tr | 10 | 8 |
| 4/20 | 5915 | 8.7 | 44 | 10.0 | 9.3 | 2 | 800 | .20 | 2.7 | 20 | 13 | 8 |
| 4/21 | 6081 | 8.8+ | 44 | 10.5 | 8.6 | 2 | 700 | .25 | 3.6 | 40 | 13 | 10 |
| 4/22 | 6169 | 8.7+ | 43 | 10.5 | 9.3 | 2 | 800 | .20 | 3.0 | 20 | 14 | 6 |
| 4/23 | 6224 | 8.7 | 45 | 10.5 | 8.1 | 2 | 700 | .25 | 2.6 | 20 | 14 | 9 |
| 4/24 | 6370 | 8.7+ | 43 | 10.0 | 8.4 | 2 | 800 | .25 | 2.9 | 60 | 14 | 11 |
| 4/25 | 6524 | 8.7+ | 44 | 10.0 | 7.8 | 2 | 900 | .25 | 3.1 | 40 | 13 | 10 |
| 4/26 | 6695 | 8.6 | 50 | 10.5 | 7.7 | 2 | 900 | .25 | 2.2 | 40 | 20 | 15 |
| 4/27 | 6824 | 8.7+ | 46 | 10.0 | 8.0 | 2 | 900 | tr | 3.2 | 20 | 14 | 11 |
| 4/28 | 6918 | 8.7+ | 51 | 10.5 | 8.2 | 2 | 1000 | tr | 3.5 | 40 | 17 | 10 |
| 4/29 | 7008 | 8.8 | 45 | 10.5 | 8.3 | 2 | 1000 | .25 | 3.5 | 40 | 17 | 9 |
| 4/30 | 7197 | 8.8 | 44 | 10.5 | 8.6 | 2 | 900 | .20 | 3.2 | 40 | 15 | 10 |
| 5/1 | 7372 | 8.8 | 44 | 10.5 | 8.7 | 2 | 750 | .20 | 3.7 | 40 | 15 | 10 |
| 5/2 | 7474 | 8.8+ | 43 | 10.5 | 8.2 | 2 | 800 | .20 | 4.2 | 40 | 14 | 8 |
| 5/3 | 7640 | 8.9 | 44 | 10.5 | 8.0 | 2 | 850 | .20 | 4.3 | 40 | 16 | 9 |
| 5/4 | 7693 | 8.9 | 41 | 9.5 | 8.5 | 2 | 900 | tr | 4.3 | 40 | 12 | 8 |
| 5/5 | 7817 | 8.7+ | 43 | 10.0 | 8.7 | 2 | 900 | tr | 3.4 | 40 | 14 | 8 |
| 5/6 | 7968 | 8.7+ | 41 | 10.0 | 8.1 | 2 | 1000 | | 3.4 | 60 | 13 | 8 |
| 5/7 | 8011 | 8.7+ | 43 | 10.0 | 8.2 | 2 | 1000 | | 3.4 | 60 | 14 | 8 |
| 5/8 | 8158 | 8.7 | 53 | 10.5 | 7.9 | 2 | 1000 | | 3.3 | 80 | 15 | 10 |

MUD RECORD CONT'D

| DATE | DEPTH | WT | F.VIS. | PH | FILTR. | CK | CHLOR. | SD | SOLIDS | CAL | PV | YP |
|---|---|---|---|---|---|---|---|---|---|---|---|---|
| 5/9/82 | 8358 | 8.8 | 45 | 10.0 | 9.7 | 2 | 1000 | | 3.6 | 80 | 13 | 8 |
| 5/10 | 8373 | 8.8 | 42 | 10.0 | 9.0 | 2 | 900 | | 3.7 | 80 | 14 | 8 |
| 5/11 | 8639 | 8.8 | 41 | 10.0 | 8.0 | 2 | 1000 | | 3.8 | 100 | 11 | 7 |
| 5/12 | 8866 | 8.8 | 41 | 10.0 | 8.3 | 2 | 1000 | | 3.6 | 80 | 13 | 6 |
| 5/13 | 9097 | 8.8 | 43 | 10.0 | 8.2 | 2 | 1000 | | 3.6 | 60 | 13 | 7 |
| 5/14 | 9212 | 8.8 | 47 | 10.0 | 8.3 | 2 | 1000 | | 3.6 | 60 | 13 | 10 |
| 5/15 | 9282 | 8.9 | 48 | 10.0 | 9.8 | 2 | 1200 | .125 | 4.3 | 80 | 15 | 9 |
| 5/16 | 9397 | 8.8 | 51 | 10.0 | 8.0 | 2 | 1200 | .125 | 3.5 | 60 | 13 | 9 |
| 5/17 | 9671 | 8.8 | 46 | 10.5 | 10.0 | 2 | 1000 | .10 | 3.8 | 60 | 14 | 10 |
| 5/18 | 9713 | 8.8 | 43 | 10.5 | 10.1 | 2 | 1000 | .10 | 3.8 | 60 | 14 | 7 |
| 5/19 | 9881 | 8.8 | 42 | 10.5 | 10.0 | 2 | 1000 | .10 | 3.8 | 80 | 13 | 7 |
| 5/20 | 9922 | 8.7+ | 43 | 10.5 | 10.0 | 2 | 1000 | .10 | 3.4 | 70 | 13 | 10 |
| 5/21 | 10024 | 8.7+ | 45 | 10.0 | 10.1 | 2 | 1000 | tr | 3.4 | 80 | 12 | 6 |
| 5/22 | 10028 | 8.8 | 39 | 9.5 | 10.2 | 2 | 1100 | .20 | 3.8 | 80 | 10 | 5 |
| 5/23 | 10111 | 8.8 | 46 | 10.5 | 11.3 | 2 | 1000 | tr | 3.7 | 100 | 11 | 8 |
| 5/24 | 10202 | 8.8 | 40 | 10.0 | 10.4 | 2 | 1000 | tr | 3.6 | 80 | 12 | 5 |
| 5/25 | 10343 | 8.7 | 42 | 10.0 | 10.0 | 2 | 1200 | tr | 3.0 | 100 | 13 | 9 |
| 5/26 | 10386 | 8.9 | 44 | 9.5 | 8.4 | 2 | 1300 | tr | 4.3 | 120 | 14 | 8 |
| 5/27 | 10464 | 8.8+ | 50 | 10.0 | 8.4 | 2 | 1200 | tr | 4.2 | 120 | 13 | 9 |
| 5/28 | 10483 | 8.8+ | 41 | 9.5 | 8.3 | 2 | 1200 | .20 | 4.3 | 160 | 15 | 5 |
| 5/29 | 10514 | 8.8 | 38 | 10.0 | 8.2 | 2 | 1300 | tr | 4.3 | 160 | 9 | 4 |
| 5/30 | 10604 | 8.8 | 43 | 10.0 | 8.8 | 2 | 1100 | tr | 3.7 | 160 | 10 | 5 |
| 5/31 | 10633 | 8.8 | 38 | 10.0 | 8.4 | 2 | 1100 | tr | 3.7 | 160 | 10 | 4 |
| 6/1 | 10713 | No mud report | | | | | | | | | | |
| 6/2 | 10727 | 8.9 | 39 | 9.0 | 10.2 | 2 | 1100 | tr | 4.3 | 120 | 10 | 5 |
| 6/3 | 10731 | No mud report while salting up. | | | | | | | | | | |
| 6/4 | 10731 | No mud report while salting up. | | | | | | | | | | |
| 6/5 | 10843 | 9.1 | 52 | 10.0 | 21 | 3 | 63K | tr | 2.2 | 160 | 11 | 28 |
| 6/6 | 10930 | 9.2 | 42 | 11.0 | 17.2 | 2 | 71K | .10 | 2.5 | 160 | 10 | 19 |
| 6/7 | 10959 | 9.2 | 42 | 11.0 | 15.2 | 2 | 79K | .10 | 2.0 | 160 | 11 | 18 |
| 6/8 | 10994 | 9.1 | 42 | 10.5 | 15.8 | 2 | 71K | tr | 1.8 | 160 | 11 | 10 |
| 6/9 | 11030 | 9.2+ | 40 | 10.5 | 12.4 | 2 | 80K | .10 | 2.2 | 160 | 11 | 10 |
| 6/10 | 11070 | 9.3 | 40 | 10.5 | 12.1 | 2 | 78K | tr | 2.8 | 160 | 10 | 10 |
| 6/11 | 11113 | 9.5 | 37 | 10.5 | 12.0 | 2 | 85K | .10 | 3.7 | 160 | 9 | 8 |

MUD RECORD CONT'D

| DATE | DEPTH | WT | F.VIS. | PH | FILTR. | CK | CHLOR. | SD | SOLIDS | CAL | PV | YP |
|---|---|---|---|---|---|---|---|---|---|---|---|---|
| 6/12 | 11206 | 9.5 | 37 | 11.0 | 12.0 | 2 | 85K | .10 | 3.7 | 180 | 9 | 7 |
| 6/13 | 11235 | 9.4 | 41 | 10.5 | 12.6 | 2 | 89K | tr | 2.8 | 180 | 11 | 8 |
| 6/14 | 11261 | 9.5 | 40 | 11.0 | 13.6 | 2 | 102K | .10 | 2.8 | 180 | 11 | 9 |
| 6/15 | 11261 | No report while logging. | | | | | | | | | | |
| 6/16 | 11341 | 10.3 | 45 | 10.0 | 18.6 | 2 | 183K | .10 | 3.2 | 200 | 13 | 10 |
| 6/17 | 11468 | 10.2+ | 40 | 11.0 | 18.2 | 2 | 171K | tr | 4.1 | 180 | 8 | 5 |
| 6/18 | ) | | | | | | | | | | | |
| 6/19 | ) | No mud reports | | | | | | | | | | |
| 6/20 | ) | | | | | | | | | | | |
| 6/21 | ) | | | | | | | | | | | |
| 6/22 | 11600 | 8.5 | 39 | 8.0 | 19.8 | 2 | 5500 | tr | 1.8 | 140 | 7 | 10 |
| 6/23 | 11671 | 8.5+ | 67 | 9.0 | 15.5 | 2 | 4500 | tr | 1.7 | 60 | 13 | 14 |
| 6/24 | 11878 | 8.6 | 49 | 9.0 | 11.8 | 2 | 5000 | tr | 1.8 | 80 | 11 | 13 |
| 6/25 | 11949 | 8.6 | 58 | 9.0 | 9.3 | 2 | 5000 | tr | 1.8 | 80 | 13 | 14 |
| 6/26 | 12109 | 8.7 | 53 | 8.5 | 9.1 | 1 | 4500 | tr | 2.4 | | 17 | 13 |
| 6/27 | 12183 | 8.7 | 47 | 9.0 | 8.8 | 1 | 4500 | tr | 2.4 | | 13 | 10 |
| 6/28 | 12350 | 8.7 | 52 | 9.5 | 9.4 | 1+ | 4300 | tr | 2.4 | | 17 | 11 |
| 6/29 | 12465 | 8.8+ | 52 | 9.0 | 9.4 | 2 | 4300 | tr | 3.2 | | 15 | 12 |
| 6/30 | 12465 | 8.9+ | 54 | 9.0 | 9.7 | 2 | 4300 | tr | 3.7 | 120 | 18 | 12 |
| 7/1 | 12502 | 8.9 | 54 | 9.0 | 8.6 | 2 | 4400 | tr | 3.7 | 100 | 18 | 10 |
| 7/2 | 12590 | 8.9 | 54 | 9.0 | 8.4 | 2 | 4300 | .25 | 3.7 | | 18 | 9 |
| 7/3 | 12624 | 8.9 | 54 | 9.0 | 8.7 | 2 | 4100 | .25 | 3.7 | | 18 | 9 |
| 7/4 | 12624 | 8.9+ | 58 | 9.0 | 9.1 | 2 | 4400 | .25 | 3.8 | | 22 | 12 |
| 7/5 | 12645 | 8.9+ | 46 | 9.5 | 8.7 | 2 | 3700 | .25 | 3.9 | | 16 | 8 |
| 7/6 | 12695 | 9.1 | 42 | 9.0 | 10.4 | 2 | 2100 | .25 | 5.1 | | 15 | 5 |
| 7/7 | 12695 | 8.8+ | 67 | 10.0 | 8.4 | 2 | 2600 | .25 | 3.7 | 100 | 22 | 13 |
| 7/8 | 12827 | 8.9 | 64 | 10.0 | 8.4 | 2 | 2300 | .25 | 3.8 | 100 | 23 | 13 |
| 7/9 | 12886 | 8.9 | 51 | 10.0 | 9.8 | 2 | 2300 | .25 | 3.9 | 100 | 15 | 8 |
| 7/10 | 13047 | 8.9+ | 58 | 10.0 | 9.8 | 2 | 2100 | .25 | 3.9 | 100 | 17 | 10 |
| 7/11 | 13082 | 9.0 | 41 | 9.5 | 11.2 | 2 | 2100 | .35 | 3.5 | 100 | 12 | 5 |
| 7/12 | 13126 | 8.9 | 46 | 9.5 | 10.1 | 2 | 2100 | .25 | 3.9 | 100 | 15 | 8 |
| 7/13 | 13231 | 8.9 | 59 | 10.0 | 9.5 | 2 | 1900 | .25 | 3.7 | 100 | 23 | 19 |
| 7/14 | 13346 | 8.8 | 39 | 9.5 | 12.5 | 2 | 1500 | .25 | 3.8 | 100 | 10 | 5 |
| 7/15 | 13438 | 8.9 | 49 | 9.5 | 11.9 | 2 | 1500 | .25 | 3.9 | 80 | 17 | 9 |
| 7/16 | 13506 | 8.9 | 45 | 10.0 | 11.2 | 2 | 1600 | .50 | 3.9 | 60 | 15 | 10 |

MUD REPORT CONT'D

| DATE | DEPTH | WT | F.VIS. | PH | FILTR. | CK | CHLOR. | SOLIDS SD | SOLIDS | SOLIDS CAL | PV | YP |
|---|---|---|---|---|---|---|---|---|---|---|---|---|
| 7/17 | 13568 | 8.9 | 42 | 11.0 | 10.4 | 2 | 1500 | .50 | 3.9 | 60 | 19 | 9 |
| 7/18 | 13568 | 8.9 | 59 | 11.0 | 11.2 | 2 | 1500 | .25 | 4.3 | 60 | 21 | 14 |
| 7/19 ) | No report while fishing | | | | | | | | | | | |
| 7/20 ) | | | | | | | | | | | | |
| 7/21 | 13568 | 8.8 | 47 | 11.0 | 8.8 | 2 | 1300 | 1.5 | 3.5 | 80 | 16 | 10 |
| 7/22 | No report | | | | | | | | | | | |
| 7/23 | 13568 | 8.7 | 44 | 10.5 | 11.2 | 2 | 1500 | 1.0 | 4.3 | 100 | 11 | 4 |

## SURVEYS AND DRILLING FUNCTIONS

| DEPTH | DEVIATION | W.O.B. | R.P.M. | S.P.P. |
|---|---|---|---|---|
| 188 | 3/4 | 10,000 | 135 | 1500 |
| 380 | 1/2 | 10,000 | 130 | 1500 |
| 460 | 1/4 | 10-15,000 | 130 | 1500 |
| 545 | 1 | 10-15,000 | 130 | 1500 |
| 650 | 1 | 10-15,000 | 120 | 1600 |
| 747 | 1-1/4 | 10-15,000 | 140 | 1700 |
| 872 | 1-1/4 | 15,000 | 120 | 1100 |
| 968 | 1-1/2 | 15,000 | 130. | 1700 |
| 1205 | 1-1/2 | 30-35,000 | 90/120 | 1500 |
| 1331 | 1 | 35,000 | 80 | 1500 |
| 1455 | 1/2 | 35,000 | 80 | 1500 |
| 1522 | 3/4 | 30,000 | 80 | |
| 1684 | 3/4 | 35,000 | 80 | 1500 |
| 1803 | 1/2 | 35,000 | 80 | 1500 |
| 1994 | 1/2 | 35,000 | 80 | 1600 |
| 2051 | 2-1/2 | at trip | | |
| 2100 | 3/4 | 30-35,000 | 110 | 1700 |
| 2280 | 1 | 30-35,000 | 110 | 1700 |
| 2448 | 1-1/2 | 35,000 | 110 | 2500 |
| 2540 | 1-1/8 | 35,000 | 110 | 2500 |
| 2677 | $1^{o}$ | 35,000 | 110 | 1700 |
| 2820 | 2-3/4 | 35,000 | 110 | 1700 |
| 2883 | 2 | 30,000 | 110 | 1700 |
| 2951 | 2 | 30,000 | 120 | 1700 |
| 3010 | 2 | 30,000 | 120 | 1700 |
| 3138 | 1-7/8 | 25,000 | 120 | 2600 |
| 3192 | $2^{o}$ | 50,000 | 80 | 2500 |
| 3504 | 2-1/4 | 50,000 | 80 | 2000 |
| 3662 | 1-3/4 | 50,000 | 80 | 2000 |
| 3788 | 1-1/2 | 40-50,000 | 120/80 | 2000 |
| 4011 | 2+ | 40-50,000 | 80/90 | 2000 |
| 4079 | 2-1/2 | 30-35,000 | 80/90 | 2000 |
| 4250 | $3^{o}$ | 65,000 | 90 | 1500 |
| 4374 | 3-1/4+ | 50,000 | 60 | 1500 |
| 4435 | 2-1/2 | 50,000 | 60 | 1500 |

## SURVEYS AND DRILLING FUNCTIONS CONT'D

| DEPTH | DEVIATION | W.O.B. | R.P.M. | S.P.P. |
|---|---|---|---|---|
| 4564 | 3-1/2° | 50-55,000 | 90 | 2500 |
| 4599 | 4 | 50-55,000 | 90 | 2500 |
| 4650 | 1-3/4 | 50-55,000 | 90 | 2500 - misrun new survey tool |
| 4710 | 4 | 50-55,000 | 90 | 2500 |
| 4741 | 3-3/4 | 50-55,000 | 90 | 2500 |
| 4839 | 4 | 50-55,000 | 90 | 2500 |
| 4901 | 4 | 50-60,000 | 100/90 | 2600 |
| 5043 | 3-1/4 | 60,000 | 90 | 2600 |
| 5103 | 3 | 60,000 | 90 | 2600 |
| 5225 | 2-3/4 | 45,000 | 100 | 2700 |
| 5605 | 2-1/2 | 45,000 | 100 | 2700 |
| Cut window and dynadrill | | | | |
| 5617 | 3-1/4 S33W | | | |
| 5650 | 3-3/4 S78W (magnetic interference) | | | |
| 5680 | 3-3/4 N74W " " | | | |
| 5722 | 3-1/4 S20E | 20,000 | 60/70 | 2500 |
| 5849 | 3-3/4 S35W | 35,000 | 65 | 2500 |
| 5912 | 3-3/4 S37W | 35,000 | 65 | 2500 |
| 5980 | 3-3/4 S35W | 35,000 | 60/80 | 2200 |
| 5989 | 3-1/2 S34W | 30-40,000 | 60/80 | 2200 |
| 6150 | 3-1/2 S22W | 35,000 | 80 | 1900 |
| 6187 | 4° S29W | 35,000 | 80 | 1900 |
| 6320 | 4° S25W | 35,000 | 80 | 1900 |
| 6392 | 4-1/4° S25W | 45,000 | 50/70 | 2400 |
| 6465 | 3-1/2° S25W | 35-45,000 | 50/60 | 2400 |
| 6628 | 4-1/4 S25W | 45,000 | 65/90 | 1800/2500 |
| 6867 | 4-1/4 S10W | 45,000 | 80/90 | 2400 |
| 6898 | 3-3/4 S22W | 40-45,000 | 60 | 2000 |
| 6898 | 3-1/2 S12W | 40-45,000 | 60 | 2000 |
| 6950 | 3-3/4 S22W | 40-45,000 | 60 | 2500 |
| 7177 | 3-1/2 S13W | 40-45,000 | 60/80 | 2500 |
| 7180 | 3-1/2 S17W | 40-45,000 | 60/80 | 2500 |
| 7303 | 3-1/2 S7W | 40-45,000 | 60/80 | 2500 |
| 7427 | 3-3/4 S10W | 40-45,000 | 80 | 2500 |
| 7432 | 3-3/4 S10W | 40-45,000 | 80 | 2500 |
| 7589 | 3-1/2 S8W | 50-60,000 | 45 | 2500 |

SURVEYS AND DRILLING FUNCTIONS CONT'D

| DEPTH | DEVIATION | W.O.B. | R.P.M. | P.P. |
|---|---|---|---|---|
| 7647 | 3-1/2° S8W | 35-50,000 | 50/75 | 2400 |
| 7804 | 3-1/2 S5W | 45,000 | 70/75 | 2400 |
| 7807 | 3-1/2 S2W | 45,000 | 70/75 | 2400 |
| 7960 | 3-1/2 S1E | 40-45,000 | 70/75 | 2400 |
| 8628 | 2 S15E | 50-55,000 | 70 | 2500 |
| 8912 | 2 S25E | 50-55,000 | 70/75 | 2600 |
| 9183 | 1-3/4 S38E | 40-60,000 | 60/80 | 2600 |
| 9618 | 2-1/4 S34E | 25,000 | 90 | 2500 |
| 9803 | 3 S30E | 30-40,000 | 60/80 | 2500 |
| 9951 | 3-1/4 S28E | 30-50,000 | 60/80 | 2500 |
| 9993 | 3-1/4 S23E | 35-40,000 | 70 | 2600 |
| 10441 | 5-1/2 S20E | 30-50,000 | 70 | 2600 |
| 10551 | 4-3/4 S14E | 40-60,000 | 60/50 | 2500/2700 |
| 10798 | 6 S23E | 45-55,000 | 50/70 | 2500 |
| 10901 | 6 S12E | 55,000 | 50 | 2500 |
| 11199 | 6-3/4 S15E | 50-65,000 | 50/55 | 2500 |
| 11448 | 5-3/4 S18E | 35,000 | 60 | 2600 |
| 11758 | 6-1/4 S39E | 28-35,000 | 70 | 2500 |
| 11861 | 6 S40E | 28-35,000 | 70 | 2500 |
| 11956 | 5-3/4 S47E | 25,000 | 70 | 2400 |
| 12010 | 5-1/2 S48E | 25,000 | 70 | 2400 |
| 12085 | 4-3/4 S53E | | | |
| 12132 | 4 S59E | 25-28,000 | 70/60 | 2200 |
| 12231 | 3-3/4 S61E | 25-28,000 | 70 | 2200 |
| 12322 | 3-1/2 S74E | 28,000 | 70 | 2200 |
| 12418 | 3-3/4 S74E | 28,000 | 70 | 2200 |
| 12451 | 3-3/4 S77E | 20-23,000 | 50/60 | 2400 |
| 12470 | 4 N89E | 30 | 60 | 2300 |
| 12584 | 4-1/2 N69E | 20-39 | 50/75 | 2500/2300 |
| 12668 | 5 N75E | 25,000 | 70 | 1500 |
| 12784 | 5-1/2 N77E | 25,000 | 70 | 1950/2000 |
| 12905 | 5-3/4 N88E | 25,000 | 70 | 2000 |
| 13033 | 6-1/2 N86E | 25,000 | 70 | 2025/2000 |
| 13149 | 6-1/4 N86E | 25,000 | 60/70 | 1700/2025 |
| 13344 | 6-3/4 N82E | 25,000 | 60 | 1700/1400 |

## GENERAL LITHOLOGY

| DEPTH/FORMATION | DESCRIPTION |
|---|---|
| 0-1340' | Predominantly gray-grayish green shales and siltstones, interbedded with salt and pepper fine grained sandstones. Organic material is present as veinlets and stringers throughout along with pyrite and gypsum, and bentonite. |
| 1340-2104' Coalville member | Variegated lavender, maroon, and gray-grayish green shales, gray carbonaceous siltstones, and gy to salt and pepper sandstones. Sandstones are conglomeratic and coal beds thicken toward the bottom. |
| 2104' | East Fork Fault (normal) |
| 2104-3112' Grass Ck. and Dry Hollow members | Interbedded gray and brown shales and siltstones, salt and pepper-gray conglomeratic sandstones, and sandy, cherty conglomerates. A thick conglomerate bed is at the base of the Dry Hollow member. |
| 3112-3312' Oyster Ridge member | Upper section consists of interbedded gray, brown, green shales, siltstones, gray, white, orange sandstones with occasional limestone nodules. The bottom section is thicker bedded sandstones interbedded with variegated purple-maroon-green shales and siltstones. |
| 3312-3570' Allen Hollow member | Black-dark gray carbonaceous shales, grading to/from coal, gray, white, and brown sandstones, occasionally conglomeratic, occasional fossil fragment (gastropod). |
| 3570-3652 Coalville member | Predominantly gray-salt and pepper sandstone, fine-medium grained, calcareous, pyritic and occasionally carbonaceous, interbedded with gray-gray green carbonaceous shale and siltstone, some grading to coal. |
| 3652-5210' Chalk Creek member | Gray green, gray, maroon, brown calcareous and bentonitic shales and siltstones interbedded with white conglomeratic, cherty and pyritic sandstones. Occasional limestone nodules and coal beds throughout. Increase in coal and interbedded shale toward bottom; very fossiliferous in bottom half. Shale becomes very bentonitic toward bottom of member. |
| 5210-5530 Spring Canyon member | Predominantly brown non-calcareous shale interbedded with numerous coal beds in upper half. Lower half contains predominantly white and salt and pepper sandstones, dark brown siltstones and pyritic coal beds generally thicker than upper half. |

GENERAL LITHOLOGY CONT'D

| DEPTH/FORMATION | DESCRIPTION |
|---|---|
| 5530-5788'<br>Longwall member | Light gray and salt and pepper fine grained-medium grained calcareous and glauconitic sandstones interbedded with brown, dark gray and black carbonaceous shales. |
| 5788-6032'<br>Aspen Shale | Dark gray to black splintery silaceous shale with fish scales and plant debris throughout. Shale interbeds with numerous bentonite beds and one tuff bed. |
| 6032-6310'<br>Bear River | Dark gray, brown shales and siltstones, carbonaceous grading to shaley coal; occasionally pyritic and fossiliferous; lower half contains many white-light gray fine to coarse grained calcareous sandstones, and shale becomes increasingly bentonitic. |
| 6310-9700'<br>Kelvin | A very thick section of brown-reddish brown and variegated shales, brown-orangish brown siltstones, red brown pebbly sandstones. This section contains many tan-light brown limestone nodules, and is very fractured and faulted in bottom 100' with abundant clay filled fractures. |
| 9700-10124'<br>Kelvin and Ephraim | Large sequence of brown-reddish brown and variegated shales, brown-orange pebbly and cherty siltstones, brown-reddish brown fine-coarse grained pebbly and conglomeratic sandstones, and numerous lenses and beds of tan-gray argillaceous limestones. Basal cherty conglomerate is the Ephraim conglomerate. |
| 10124-10200'<br>Stump Redwater member | Light gray-white very fine-fine grained sandstone, calcareous and glauconitic, clay filled, interbedded with gray-gray green calcareous shales; abundant chert throughout. |
| 10200-10425'<br>Curtis member | Intraformational fault @ 10200. Red brown-brown shale, gray-green claystones with shale parting, white-light gray very fine-fine grained sandstone, pebbly and very cherty, slightly glauconitic. |
| 10425-11388'<br>Preuss | Brown-red brown, brownish orange shales, siltstones and sandstones. Shales are occasionally bentonitic, and sandstones are pebbly and cherty. Clay fracture filling throughout along with two interformational faults. Shale decreases in bottom half; pebbly and cherty siltstone increases. Interbedded salt and shaley anhydrite 11313-11322. |

GENERAL LITHOLOGY CONT'D

| DEPTH/FORMATION | DESCRIPTION |
|---|---|
| 11388-11864' Twin Creek Giraffe Creek member | Gray-dark gray shaley, sandy, occasionally oolitic limestone interbedded with gray, calcareous, pyritic and occasionally anhydritic shale. Several beds of white-light gray very fine-fine grained glauconitic sandstone. |
| 11864-12126' Leeds Creek member | Light-medium gray shaley limestone with occasional pink anhydrite stringers; shale stringers-gray, grayish green, bentonitic - ashy; tuffaceous in part. Light-medium gray, salt and pepper very fine grained sandstone beds near the bottom. Clay filled. |
| 12126-12326' Watton Canyon member | Light gray-gray brown shaley - oolitic limestone with abundant clay fracture fill. Some white-light green claystone beds. |
| 12326-12364' Boundary Ridge member | Reddish brown-brown non-calcareous siltstone interbedded with white crystalline anhydrite siltstones grade to silty shale, micro micaceous. |
| 12364-12598 Rich member | Predominantly light-medium gray silty and shaley limestone with occasional oolites, grading in part to limey medium-dark gray shale and siltstone. This member is fractured throughout, and is clay filled in the upper half. The lower half exhibits fair open fracture porosity. |
| 12598-12678' Sliderock member | Brown-brownish gray, waxy, cryptocrystalline, very clean limestone, highly fractured in top 30'. Limestone becomes grayer toward the bottom, and the bottom 20' is oolitic and shaley. |
| 12678-12768' Gypsum Springs member | Interbedded reddish brown-reddish orange cherty siltstone and white-cream earthy anhydrite. |
| 12768-12940' Nugget | White, clear and frosted fine-coarse grained, well sorted sandstone showing fair-good porosity. Sandstone is partly tan-light brown oil stained, and has black oil flecks with yellow/gold fluorescence, blue-green ring cut - slow streaming yellow cut. |
| 12940-13020' Nugget | White, clear and frosted, fine-some coarse grained, well sorted, sandstone with good porosity. Coarse grained sections are unconsolidated. Sandstone has tan-light brown oil stain - black oil flecked, with yellow gold-yellow blue fluorescence, and yellow ringing-slow streaming cut. |
| 13020-13060' Nugget | White-clear, brownish orange fine grained tight sandstone. Sandstone is slightly glauconitic, has poor porosity, and has no to poor oil staining, with weak yellow/blue milky cut. |

GENERAL LITHOLOGY CONT'D

| DEPTH/FORMATION | DESCRIPTION |
|---|---|
| 13060-13150' Nugget | White-clear and frosted, fine-sme coarse grained, well sorted sandstone with poor-good porosity, becoming silty in bottom 30'. Siltstone is gray, calcareous and slightly sandy. Sandstone is clay filled and glauconitic. Oil stain is light brown, and cut is streaming yellow with yellow residue. |
| 13150-13200' Nugget | Sandstone is mostly brown due to oil staining, fine-coarse grained, some unconsolidated, good-excellent porosity, well sorted, with fast blooming-fast yel streaming cut and greenish yellow residue. |
| 13200-13300' Nugget | White, clear and frosted fine-medium grained, poor-good porosity sandstone, glauconitic and clay filled. This zone is possibly highly fractured with several thief zones. Sandstone has brown oil stain and black oil flecks with yellow to greenish yellow fluorescence. Bottom 10' is silty with gray calcareous sandy siltstone. |
| 13300-13380' Nugget | White, clear-frosted, becoming pink, fine grained-coarse grained, poor-fair porosity, glauconitic, occasionally silty sandstone. Sandstone is possibly highly fractured with several thief zones, and high torque. No to poor oil staining with yellow fluorescence and yel ring - streaming cut. |
| 13380-13430' | No returns |
| 13430-13500' Nugget | Pink-light orange, white, fine-medium grained, moderately well sorted, poor-fair porosity, silaceous sandstone, some unconsolidated, glauconitic, clay filled, possibly fractured. Trace of oil stain, trace of yellow fluorescence, no cut. |
| 13500-13568' Nugget - T.D. | White-clear, light orange, medium-coarse grained, becoming fine grained at bottom, moderately well sorted, porosity fair-good, decreasing downward. Sandstone becoming silaceous and tight. Trace oil stain, no fluorescence or cut. |

FORM DOGM-UIC-2
(Rule I-5 (b) 2

PLEASE TYPE OR USE BLACK INK ONLY

(To be filed within 30 days after drilling is completed)

COUNTY LEASE NO.

DAVIS LEASE
DAVIS WELL

DEPARTMENT OF NATURAL RESOURCES AND ENERGY
DIVISION OF OIL, GAS, AND MINING
Room 4241 State Office Building
Salt Lake City, Utah 84114

API NO

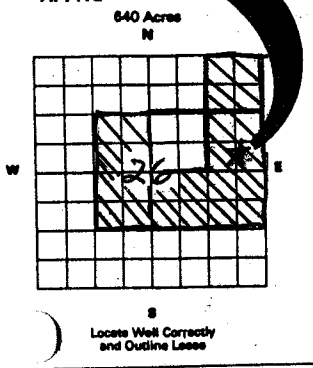


COUNTY Summit SEC. 26 TWP. 3N RGE. 7E
COMPANY OPERATING Davis Oil Company
OFFICE ADDRESS 410 17th St. Suite 1400
TOWN Denver STATE ZIP CO 80202
FARM NAME Logan Federal WELL NO. 1
DRILLING STARTED 12-20 19 81 DRILLING FINISHED 7-29 19 82
DATE OF FIRST PRODUCTION 8-5-82 COMPLETED 8-31-82
WELL LOCATED SE ¼ SE ¼ NE ¼ Bottom Hole Location
507 FT. FROM SL OF ¼ SEC. & 2288 FT. FROM WL OF ¼ SEC.
ELEVATION DERRICK FLOOR 7514' GROUND 7489'

TYPE COMPLETION
Single Zone Nugget Order No.
Multiple Zone Order No.
Comingled Order No.
LOCATION EXCEPTION Order No. Penalty

OIL OR GAS ZONES

| Name | From | To | Name | From | To |
|---|---|---|---|---|---|
| Nugget Sand | 12,804' | 12,926' | | | |
| | | | | | |

CASING & CEMENT

| Casing Set | | | | Csg. Test | Cement | | |
|---|---|---|---|---|---|---|---|
| Size | Wgt | Grade | Feet | Psi | Sax | Fillup | Top |
| 20 | 133# | K-55 | 1008 | | 1766 | 1008 | Surface |
| 13 3/8 | 72# | S-95 | 5730 | | 1700 | 5730 | Surface |
| 9 5/8 | 62.8# | P-110 | 11,432 | | 900 | 3202 | 8230 |
| 7" | 38# | P-110 | 13,488 | | 1000 | 1688 | 11,800 |
| | | | | | | | |

TOTAL DEPTH 13,492'

PACKERS SET DEPTH Baker Model 'DB' permanent packer will be set @ 12,845

COMPLETION & TEST DATA BY PRODUCING FORMATION

| | 1 | 2 | 3 |
|---|---|---|---|
| FORMATION | Nugget | | |
| SPACING & SPACING ORDER NO. | 80 acres | | |
| CLASSIFICATION (Oil; Gas; Dry; Inj. Well) | Gas | | |
| PERFORATED INTERVALS | 12,804-12,826 | | |
| | 12,860-12,895 | | |
| | 12,910-12,926 | | |
| | | | |
| ~~ACIDIZED?~~ Oil Breakdown | Breakdown with 200 bbls oil | | |
| ~~FRACTURE TREATED?~~ | | | |

INITIAL TEST DATA

| | | | |
|---|---|---|---|
| Date | 8/27/82 | | |
| Oil. bbl./day | 700 | | |
| Oil Gravity | 53 | | |
| Gas. Cu. Ft./day | 8,000,000 CF | CF | CF |
| Gas-Oil Ratio Cu. Ft./Bbl. | 11,429 | | |
| Water-Bbl./day | 4 | | |
| Pumping or Flowing | Flowing | | |
| CHOKE SIZE | 28/64 | | |
| FLOW TUBING PRESSURE | 2000 psi | | |

A record of the formations drilled through, and pertinent remarks are presented on the reverse. (use reverse side)

I, the undersigned, being first duly sworn upon oath, state that this well record is true, correct and complete according to the records of this office and to the best of my knowledge and belief.

Telephone (303)629-8846 Robert E. Blaylock, Rocky Mountain Div. Mgr
Name and title of representative of company

Subscribed and sworn before me this _____ day of _____, 19 _____.

## FORMATION TOPS

Surface Elevation: G.L. 7489' K.B. 7514'

| Formation | Depth From K.B. | |
|---|---|---|
| | SAMPLE TOPS | |
| Frontier F.M. | Surface | |
| Fault - Grass Ck. | | |
| Mbr./Dry Hollow Mbr. | 2104' | |
| Oyster Ridge Mbr. | 3112' | |
| Allen Hollow Mbr. | 3312' | |
| Coalville Mbr. | 3570' | |
| Chalk Creek Mbr. | 3652' | |
| Spring Cny. Mbr. | 5210' | |
| Longwall Mbr. | 5530' | |
| Aspen Fm. | 5788' | |
| Bear River Fm. | 6032' | |
| Kelvin Fm. | 6310' | |
| Stump Fm. | 10124' | |
| Preuss Fm. | 10425' | |
| Salt | 11313-11322' | |
| | | E-LOG TOPS |
| Twin Ck. Fm. | 11388' | 11402' |
| Giraffe Ck. Mbr. | | |
| Leeds Ck. Mbr | 11864' | 11858' |
| Watton Cny. Mbr | 12126' | 12126'? |
| Boundary Ridge Mbr. | 12280' | 12282' |
| Rich Mbr. | 12364' | 12352' |
| Sliderock Mbr. | 12598' | 12594' |
| Gypsum Springs Mbr. | 12678' | 12678'? |
| Nugget SS. | 12768' | 12758' |

Form 9-330
(Rev. 5-63)

UNITED STATES
DEPARTMENT OF THE INTERIOR
GEOLOGICAL SURVEY

SUBMIT IN DUPLICATE*
(See other instructions on reverse side)

Form approved.
Budget Bureau No. 42-R355.5.

# WELL COMPLETION OR RECOMPLETION REPORT AND LOG*

RECEIVED SEP 13 1982 DIVISION OF OIL, GAS & MINING

1a. TYPE OF WELL: OIL WELL [XX] GAS WELL [ ] DRY [ ] Other

b. TYPE OF COMPLETION: NEW WELL [XX] WORK OVER [ ] DEEP-EN [ ] PLUG BACK [ ] DIFF. RESVR. [ ] Other

2. NAME OF OPERATOR: DAVIS OIL COMPANY

3. ADDRESS OF OPERATOR: 410 17th Street, Suite 1400, Denver CO 80202

4. LOCATION OF WELL (Report location clearly and in accordance with any State requirements)*
At surface: SENE Sec.26, T3N, R7E
At top prod. interval reported below: 1658 FNL, 690 FEL
At total depth:

5. LEASE DESIGNATION AND SERIAL NO.: W-47812
6. IF INDIAN, ALLOTTEE OR TRIBE NAME: ----
7. UNIT AGREEMENT NAME: ----
8. FARM OR LEASE NAME: LOGAN FEDERAL
9. WELL NO.: #1
10. FIELD AND POOL, OR WILDCAT: Wildcat
11. SEC., T., R., M., OR BLOCK AND SURVEY OR AREA: Sec. ~~26~~ 36, T3N, R7E

| 14. PERMIT NO. | DATE ISSUED | 12. COUNTY OR PARISH | 13. STATE |
|---|---|---|---|
| 43-043 30186 | 10-23-81 | Summit | Utah |

| 15. DATE SPUDDED | 16. DATE T.D. REACHED | 17. DATE COMPL. (Ready to prod.) | 18. ELEVATIONS (DF, RKB, RT, GR, ETC.)* | 19. ELEV. CASINGHEAD |
|---|---|---|---|---|
| 12-20-81 | 7-23-82 | 8-5-82 | 7489'GL, 7514'KB | ---- |

| 20. TOTAL DEPTH, MD & TVD | 21. PLUG, BACK T.D., MD & TVD | 22. IF MULTIPLE COMPL., HOW MANY* | 23. INTERVALS DRILLED BY | ROTARY TOOLS | CABLE TOOLS |
|---|---|---|---|---|---|
| 13,492' | 13,307' | 0 | → | 0-13,492' | ---- |

24. PRODUCING INTERVAL(S), OF THIS COMPLETION—TOP, BOTTOM, NAME (MD AND TVD)*
12,804-12,926' Nugget

25. WAS DIRECTIONAL SURVEY MADE: No

26. TYPE ELECTRIC AND OTHER LOGS RUN
DLL/MSFL, FDC/CNL, BHC/Sonic Sample

27. WAS WELL CORED: No

28. CASING RECORD (Report all strings set in well)

| CASING SIZE | WEIGHT, LB./FT. | DEPTH SET (MD) | HOLE SIZE | CEMENTING RECORD | AMOUNT PULLED |
|---|---|---|---|---|---|
| 20" | 133 | 1008 | 26" | Class G | |
| 13-3/8" | 72, 68 &54.5 | 5730 | 17.5" | Class G | |
| 9-5/8" | 62.8,53.5&47 | 11432 | 12¼" | 50/50 Poz | |
| 7" | 35 & 38 | 13488 | 8.5" | 50/50 Poz | |

29. LINER RECORD

| SIZE | TOP (MD) | BOTTOM (MD) | SACKS CEMENT* | SCREEN (MD) |
|---|---|---|---|---|
| | | | | |

30. TUBING RECORD

| SIZE | DEPTH SET (MD) | PACKER SET (MD) |
|---|---|---|
| 2-7/8" | 12707 | 12710 |

31. PERFORATION RECORD (Interval, size and number)
12,804-826', 12,860-864' .44" 45 holes.
12,868-870', 12,871-873, 12,876-879',
12,881-882', 12,885-887, 12,889-890',
12,892-895, 12,910-914', 12,919-921',
12,924-926' .36" 63 holes

32. ACID, SHOT, FRACTURE, CEMENT SQUEEZE, ETC.

| DEPTH INTERVAL (MD) | AMOUNT AND KIND OF MATERIAL USED |
|---|---|
| 12,804-926 | 200bbls condensate w/10 gal/1000 Hyflow 8, 5 gal/1000 FR-5 & 110 ball sealers. 78 bbls condensat w/5 gal/1,000 FR-5 |

33.* PRODUCTION

| DATE FIRST PRODUCTION | PRODUCTION METHOD (Flowing, gas lift, pumping—size and type of pump) | WELL STATUS (Producing or shut-in) |
|---|---|---|
| 8-5-82 | Flowing | SI WOPL |

| DATE OF TEST | HOURS TESTED | CHOKE SIZE | PROD'N. FOR TEST PERIOD | OIL—BBL. | GAS—MCF. | WATER—BBL. | GAS-OIL RATIO |
|---|---|---|---|---|---|---|---|
| 8-27-82 | 24 | 28/64 | → | 700 | 8000 | 4 | 11,428.5 |

| FLOW. TUBING PRESS. | CASING PRESSURE | CALCULATED 24-HOUR RATE | OIL—BBL. | GAS—MCF. | WATER—BBL. | OIL GRAVITY-API (CORR.) |
|---|---|---|---|---|---|---|
| 2,000 psi | 1,000 psi | → | 700 | 8000 | 4 | 53 |

34. DISPOSITION OF GAS (Sold, used for fuel, vented, etc.)
To be sold

TEST WITNESSED BY: Darr Hammond

35. LIST OF ATTACHMENTS
Geological reports previously submitted.

36. I hereby certify that the foregoing and attached information is complete and correct as determined from all available records

SIGNED [signature] TITLE Division Manager DATE 9/9/82

*(See Instructions and Spaces for Additional Data on Reverse Side)

# INSTRUCTIONS

**General:** This form is designed for submitting a complete and correct well completion report and log on all types of lands and leases to either a Federal agency or a State agency, or both, pursuant to applicable Federal and/or State laws and regulations. Any necessary special instructions concerning the use of this form and the number of copies to be submitted, particularly with regard to local, area, or regional procedures and practices, either are shown below or will be issued by, or may be obtained from, the local Federal and/or State office. See instructions on items 22 and 24, and 33, below regarding separate reports for separate completions.

If not filed prior to the time this summary record is submitted, copies of all currently available logs (drillers, geologists, sample and core analysis, all types electric, etc.), formation and pressure tests, and directional surveys, should be attached hereto, to the extent required by applicable Federal and/or State laws and regulations. All attachments should be listed on this form, see item 35.

**Item 4:** If there are no applicable State requirements, locations on Federal or Indian land should be described in accordance with Federal requirements. Consult local State or Federal office for specific instructions.

**Item 18:** Indicate which elevation is used as reference (where not otherwise shown) for depth measurements given in other spaces on this form and in any attachments.

**Items 22 and 24:** If this well is completed for separate production from more than one interval zone (multiple completion), so state in item 22, and in item 24 show the producing interval, or intervals, top(s), bottom(s) and name(s) (if any) for only the interval reported in item 33. Submit a separate report (page) on this form, adequately identified, for each additional interval to be separately produced, showing the additional data pertinent to such interval.

**Item 29:** *"Sacks Cement":* Attached supplemental records for this well should show the details of any multiple stage cementing and the location of the cementing tool.

**Item 33:** Submit a separate completion report on this form for each interval to be separately produced. (See instruction for items 22 and 24 above.)

**37. SUMMARY OF POROUS ZONES:**
SHOW ALL IMPORTANT ZONES OF POROSITY AND CONTENTS THEREOF; CORED INTERVALS; AND ALL DRILL-STEM TESTS, INCLUDING DEPTH INTERVAL TESTED, CUSHION USED, TIME TOOL OPEN, FLOWING AND SHUT-IN PRESSURES, AND RECOVERIES

| FORMATION | TOP | BOTTOM | DESCRIPTION, CONTENTS, ETC. |
|---|---|---|---|
| | | | |

**38. GEOLOGIC MARKERS**

| NAME | TOP | |
|---|---|---|
| | MEAS. DEPTH | TRUE VERT. DEPTH |
| Aspen | 5789 | |
| Bear River | 6050 | |
| Kelvin | 6300 | |
| Stump | 10,140 | |
| Preuss | 10,400 | |
| TD | 13,492 | |

2

Form 9-331
(May 1963)

UNITED STATES
DEPARTMENT OF THE INTERIOR
GEOLOGICAL SURVEY

SUBMIT IN TRIPLICATE*
(Other instructions on reverse side)

Form approved.
Budget Bureau No. 42-R1424.

5. LEASE DESIGNATION AND SERIAL NO.
U-47812

6. IF INDIAN, ALLOTTEE OR TRIBE NAME

# SUNDRY NOTICES AND REPORTS ON WELLS

(Do not use this form for proposals to drill or to deepen or plug back to a different reservoir. Use "APPLICATION FOR PERMIT—" for such proposals.)

7. UNIT AGREEMENT NAME

1. OIL WELL [X] GAS WELL [ ] OTHER

8. FARM OR LEASE NAME
Logan Federal

2. NAME OF OPERATOR
DAVIS OIL COMPANY

9. WELL NO.
# 1

3. ADDRESS OF OPERATOR
410 17th Street, Suite 1400, Denver, Colorado 80202

10. FIELD AND POOL, OR WILDCAT
Wildcat

4. LOCATION OF WELL (Report location clearly and in accordance with any State requirements.* See also space 17 below.)
At surface
1980' FNL & 660' FEL

11. SEC., T., R., M., OR BLK. AND SURVEY OR AREA
SENE Sec.26, T3N,R7E

14. PERMIT NO.
43043-30186

15. ELEVATIONS (Show whether DF, RT, GR, etc.)

12. COUNTY OR PARISH: Summit

13. STATE: Utah

16. Check Appropriate Box To Indicate Nature of Notice, Report, or Other Data

NOTICE OF INTENTION TO:

| | | | |
|---|---|---|---|
| TEST WATER SHUT-OFF | [ ] | PULL OR ALTER CASING | [ ] |
| FRACTURE TREAT | [ ] | MULTIPLE COMPLETE | [ ] |
| SHOOT OR ACIDIZE | [ ] | ABANDON* | [ ] |
| REPAIR WELL | [ ] | CHANGE PLANS | [ ] |
| (Other) | | | |

SUBSEQUENT REPORT OF:

| | | | |
|---|---|---|---|
| WATER SHUT-OFF | [ ] | REPAIRING WELL | [ ] |
| FRACTURE TREATMENT | [ ] | ALTERING CASING | [ ] |
| SHOOTING OR ACIDIZING | [ ] | ABANDONMENT* | [ ] |
| (Other) Progress Report | | | [X] |

(NOTE: Report results of multiple completion on Well Completion or Recompletion Report and Log form.)

17. DESCRIBE PROPOSED OR COMPLETED OPERATIONS (Clearly state all pertinent details, and give pertinent dates, including estimated date of starting any proposed work. If well is directionally drilled, give subsurface locations and measured and true vertical depths for all markers and zones pertinent to this work.)*

8/21/82 Perforated @ 12,860'-864'; 12,868'-12,870'; 12,871'-12,873'; 12,876'-879'; 12,881'-882'; 12,885'-887'; 12,889'-890'; & 12,892'-895' w/.36, 2 JSPF, 44 holes. FTP 3040#.

8/24/82 Breakdown Nugget Formation w/200 bbls. condensate w/110 ball sealers, 1.1 gravity w/10 gal/1000 Hyflow IV and 5/gal/1000 FR-5, Flush w/78 bbls condensate w/5 gal/1000 FR-5.

8/26/82 Perforate @ 12,910'-914', 12,919-921', 12,924-926' 2 JSPF 19 hol

8/28/82 Run gradient tests. Shut in for Bottom hole pressure Build up.

9/1/82 Shut in, waiting for pipe line.

9/2/82 FINAL REPORT.

18. I hereby certify that the foregoing is true and correct

SIGNED Billie Claycomb TITLE Completion Secretary DATE 9/21/82

(This space for Federal or State office use)

APPROVED BY _____ TITLE _____ DATE _____

CONDITIONS OF APPROVAL, IF ANY:

*See Instructions on Reverse Side

RECEIVED
SEP 24 1982
DIVISION OF
OIL, GAS & MINING

STATE OF UTAH
NATURAL RESOURCES & ENERGY
Oil, Gas & Mining

Scott M. Matheson, Governor
Temple A. Reynolds, Executive Director
Cleon B. Feight, Division Director

4241 State Office Building • Salt Lake City, UT 84114 • 801-533-5771

October 12, 1982

Davis Oil Company
410 17th Street, Suite 1400
Denver, Colorado 80202

Re: Well No. Logan Federal #1
Sec. 26, T. 3N, R. 7E.
Summit County, Utah

Gentlemen:

According to our records, a "Well Completion Report" filed with this office September 21, 1982, from above referred to well, indicates the following electric logs were run: DIL/MSFL, FDC/CNL, BHC/Sonic. As of todays date, this office has not received these logs.

Rule C-5, General Rules and Regulations and Rules of Practice and Procedure, requires that a well log shall be filed with the Commission together with a copy of the electric and radioactivity logs.

Your prompt attention to the above will be greatly appreciated.

Sincerely,

DIVISION OF OIL, GAS AND MINING

Cari Furse

Cari Furse
Clerk Typist

CF/cf

Board/Charles R. Henderson, Chairman • John L. Bell • E. Steele McIntyre • Edward T. Beck
Robert R. Norman • Margaret R. Bird • Herm Olsen

an equal opportunity employer • please recycle paper

FORM NO. DOGM-UIC-1

**STATE OF UTAH**
**DIVISION OF OIL, GAS, AND MINING**
**ROOM 4241 STATE OFFICE BUILDING**
**SALT LAKE CITY, UTAH 84114**
**(801) 533-5771**
**(RULE I-5)**

**IN THE MATTER OF THE APPLICATION OF**
Davis Oil Company

**ADDRESS** 410 17th St. Suite 1400
Denver, CO 80202 **ZIP**

**INDIVIDUAL** ___ **PARTNERSHIP** X **CORPORATION** ___

**FOR ADMINISTRATIVE APPROVAL TO DISPOSE OR INJECT FLUID INTO THE** Logan Federal **WELL**
**SEC.** 26 **TWP.** 3N **RANGE** 7E
Summit **COUNTY, UTAH**

**CAUSE NO.** _____

**ENHANCED RECOVERY INJ. WELL** ☒
**DISPOSAL WELL** ☐

**APPLICATION**

**Comes now the applicant and shows the Division the following:**
**1. That Rule 1-5 (b) 6 authorizes administrative approval of enhanced recovery injections or disposal operations.**
**2. That the applicant submits the following information.**

| Lease Name | Well No. | Field | County |
|---|---|---|---|
| Logan Federal | 1 | Wildcat | Summit |

**Location of Enhanced Recovery Injection or Disposal Well** SENE **Sec.** 26 **Twp.** 3N **Rge.** 7E

| New Well To Be Drilled | Old Well To Be Converted | Casing Test |
|---|---|---|
| Yes ☐ No ☐ | Yes ☒ No ☐ | Yes ☒ No ☐ Date 8/4/82 |

| Depth-Base Lowest Known Fresh Water Within ½ Mile | Does Injection Zone Contain Oil-Gas-Fresh Water Within ½ Mile | State What |
|---|---|---|
| 504' | YES ☒ NO ☐ | Gas |

| Location of Injection Source(s) | Geologic Name(s) and Depth of Source(s) |
|---|---|
| Logan Federal #1 well SENE Sec. 26 T3N R7E Summit County, Utah | Nugget Sandstone 12,860' to 12,926' |

| Geologic Name of Injection Zone | Depth of Injection Interval |
|---|---|
| Nugget Sandstone | 12,804 to 12,826' |

| a. Top of the Perforated Interval: | b. Base of Fresh Water: | c. Intervening Thickness (a minus b) |
|---|---|---|
| 12,804' | 504' | 12,300' |

**Is the intervening thickness sufficient to show fresh water will be protected without additional data?** (YES) ~~NO~~

**Lithology of Intervening Zones** Sandstones, Siltstones and impermeable shales

**Injection Rates and Pressures**
**Maximum** 5,000,000 SCFPD gas ~~B/D~~
6,000 **PSI**

**The Names and Addresses of Those To Whom Copies of This Application and Attachments Have Been Sent**

Thousand Peaks, Ranchs, c/o L. Moench, 255 W. 800 S., Salt Lake City, UT 84101
Welby Aagard, 2777 Wilshire Dr. Salt Lake City, UT 84101
Utah Protestant Camps Foundation, c/o R. McKenzie 603 Pioneer Ave. Toole, UT 84074

**State of** _____)
**County of** _____)

_____
**Applicant**

**Before me, the undersigned authority, on this day personally appeared** _____ **known to me to be the person whose name is subscribed to the above instrument, who being by me duly sworn on oath states, that he is duly authorized to make the above report and that he has knowledge of the facts stated therein, and that said report is true and correct.**

**Suscribed and sworn to before me this** _____ **day of** _____, **19** _____

**SEAL**

_____

**My commission expires** _____ **Notary Public in and for** _____

**(OVER)**

FORM DOGM-UIC-1 (continued)

## INSTRUCTIONS

1. Attach qualitative and quantitative analysis of fresh water from 2 or more producing wells within 1 mile of injection well showing location of wells and date samples were taken, or statement as to why samples were not submitted.
2. Attach qualitative and quantitative analysis of representative sample of water to be injected.
3. Attach plat showing subject well and all known oil and gas wells, abandoned, drilling and dry holes within ½ mile, together and with name of operator.
4. Attach Drillers Log (Form DOGM-UIC-2). (Appropriate Surety must be on file with Conservation Division.)
5. Attach Electric or Radioactivity Log of Subject well (if released).
6. Attach schematic drawing of subsurface facilities including; Size, setting depth, amount of cement used measured or calculated tops of cement surface, intermediate (if any) and production casings; size and setting depth of tubing; type and setting depth of packer; geologic name of injection zone showing top and bottom of injection interval.
7. The original and 6 copies of application, and one complete set of attachments shall be mailed to the Division.
8. Deliver 1 copy of application to landowner on whose land injection well is located and to each operator of a producing leasehold within ½ mile of injection well.
9. Affidavit of mailing or delivery shall be filed not later than five days after the application is filed.
10. Notice that an application has been filed shall be published by the Division in a newspaper of general circulation in the county in which the well is located. The Division shall file proof of publication before the application is approved. The notice shall include name and address of applicant, location of proposed injection or disposal well, injection zone, injection pressure and volume. If no written objection is received within 15 days from date of publication the application will be approved administratively.
11. A well shall not be used for injection or disposal unless completed machine accounting Form DOGM-UIC-3b is filed September 1st, each year.
12. Approval of this application, if granted, is valid only as long as there is no substantial change in the operations set forth in the application. A substantial operation change requires the approval of a new application.
13. If there is less intervening thickness required by Rule I-5 (b) 4 attach sworn evidence and data.

## CASING AND TUBING DATA

| NAME OF STRING | SIZE | SETTING DEPTH | SACKS CEMENT | TOP OF CEMENT | TOP DETERMINED BY |
|---|---|---|---|---|---|
| Surface | 20"<br>13 3/8" | 1008'<br>5730' | 1766 sx<br>1700 sx | Surface<br>Surface | Sight<br>Sight |
| Intermediate | 9 5/8" | 11,432' | 900 sx | 8230' | Bond log 6/23/82 |
| Production | 7" | 13,488' | 1000 sx | 11,800' | Bond log 8/2/82 |
| Tubing | 2 7/8" | 12,845' | Name - Type - Depth of Tubing Packer<br>Baker Model "DB" permanent packer @ 12,845' | | |

| Total Depth | Geologic Name - Inj. Zone | Depth - Top of Inj. Interval | Depth - Base of Inj. Interval |
|---|---|---|---|
| 13,492' | Nugget Sandstone | 12,804' | 12,826' |

SKETCH - SUB-SURFACE FACILITY

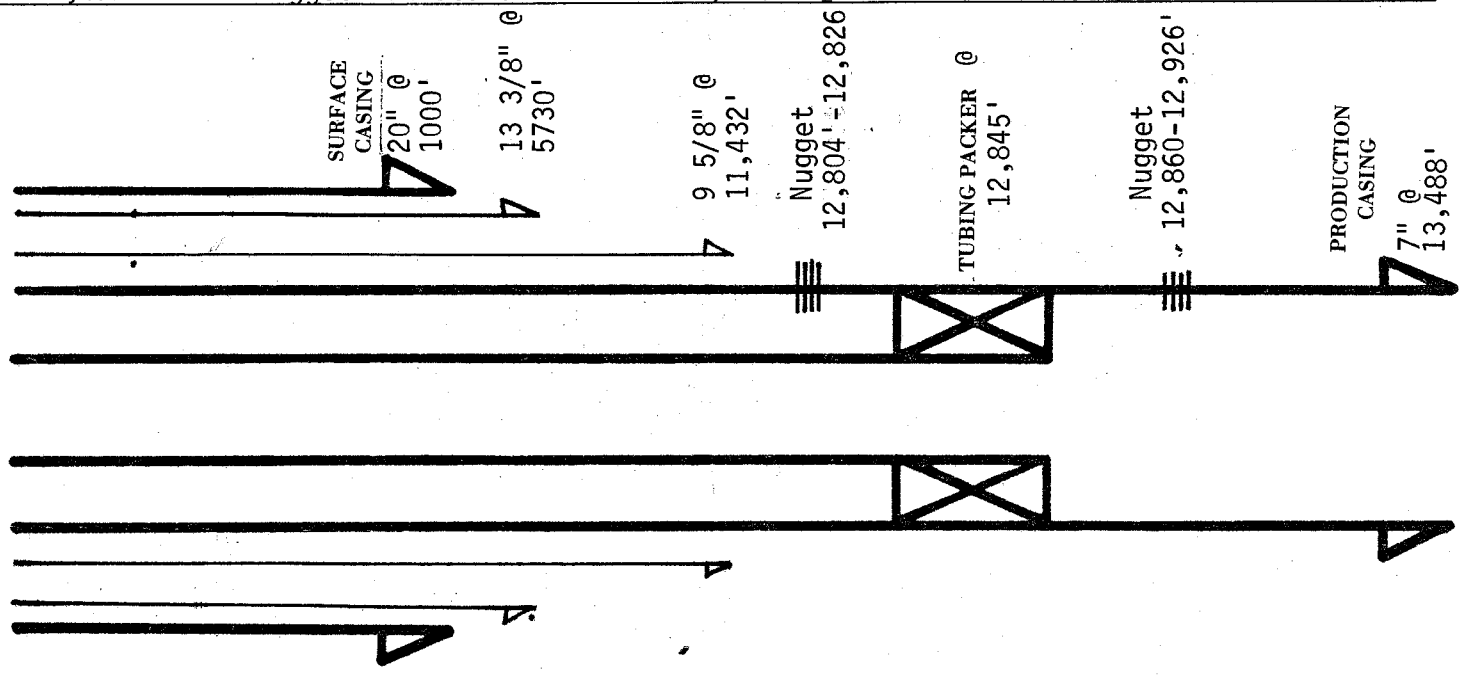

531-8446
1850 Bea. Life

STATE OF UTAH
DIVISION OF OIL, GAS, AND MINING
ROOM 4241 STATE OFFICE BUILDING
SALT LAKE CITY, UTAH 84114
(801) 533-5771
(RULE I-5)

FORM NO. DOGM-UIC-1

IN THE MATTER OF THE APPLICATION OF
Davis Oil Company
ADDRESS 410 17th St. Suite 1400
Denver, CO 80202 ZIP
INDIVIDUAL ___ PARTNERSHIP X CORPORATION ___
FOR ADMINISTRATIVE APPROVAL TO DISPOSE OR INJECT FLUID INTO THE Logan Federal WELL
SEC. 26 TWP. 3N RANGE 7E
Summit COUNTY, UTAH

CAUSE NO. UIC-012-Notice
UIC-013 Hearing

ENHANCED RECOVERY INJ. WELL ☒
DISPOSAL WELL ☐

## APPLICATION

Comes now the applicant and shows the Division the following:
1. That Rule 1-5 (b) 6 authorizes administrative approval of enhanced recovery injections or disposal operations.
2. That the applicant submits the following information.

| Lease Name | Well No. | Field | County |
|---|---|---|---|
| Logan Federal | 1 | Wildcat | Summit |

Location of Enhanced Recovery Injection or Disposal Well SENE Sec. 26 Twp. 3N Rge. 7E

| New Well To Be Drilled | Old Well To Be Converted | Casing Test |
|---|---|---|
| Yes ☐ No ☐ | Yes ☒ No ☐ | Yes ☒ No ☐ Date 8/4/82 |

Depth-Base Lowest Known Fresh Water Within ½ Mile 504'
Does Injection Zone Contain Oil-Gas-Fresh Water Within ½ Mile YES ☒ NO ☐
State What Gas

Location of Injection Source(s) Logan Federal #1 well SENE Sec. 26 T3N R7E Summit County, Utah
Geologic Name(s) and Depth of Source(s) Nugget Sandstone 12,860' to 12,926'

Geologic Name of Injection Zone Nugget Sandstone
Depth of Injection Interval 12,804 to 12,826'

| a. Top of the Perforated Interval: | b. Base of Fresh Water: | c. Intervening Thickness (a minus b) |
|---|---|---|
| 12,804' | 504' | 12,300' |

Is the intervening thickness sufficient to show fresh water will be protected without additional data? YES ~~NO~~

Lithology of Intervening Zones Sandstones, Siltstones and impermeable shales

Injection Rates and Pressures
Maximum 5,000,000 SCFPD gas ~~B/D~~
6,000 PSI

The Names and Addresses of Those To Whom Copies of This Application and Attachments Have Been Sent

Thousand Peaks, Ranchs, c/o L. Moench, 255 W. 800 S., Salt Lake City, UT 84101
Welby Aagard, 2777 Wilshire Dr. Salt Lake City, UT 84101
Utah Protestant Camps Foundation, c/o R. McKenzie 603 Pioneer Ave. Toole, UT 84074

State of Colorado )
County of Denver )

Applicant

Before me, the undersigned authority, on this day personally appeared Robert E. Blaylock known to me to be the person whose name is subscribed to the above instrument, who being by me duly sworn on oath states, that he is duly authorized to make the above report and that he has knowledge of the facts stated therein, and that said report is true and correct.

Subscribed and sworn to before me this 19 day of Nov., 19 82

SEAL

Evelyn Epstein
Notary Public in and for Denver, Colorado

My commission expires 2/18/85

(OVER)

Logan Federal #1
Bottom Hole Location SESENE

# SURFACE OWNERSHIP

Township 3N, Range 7E, County Summit, State Utah

**Island Township Plat**

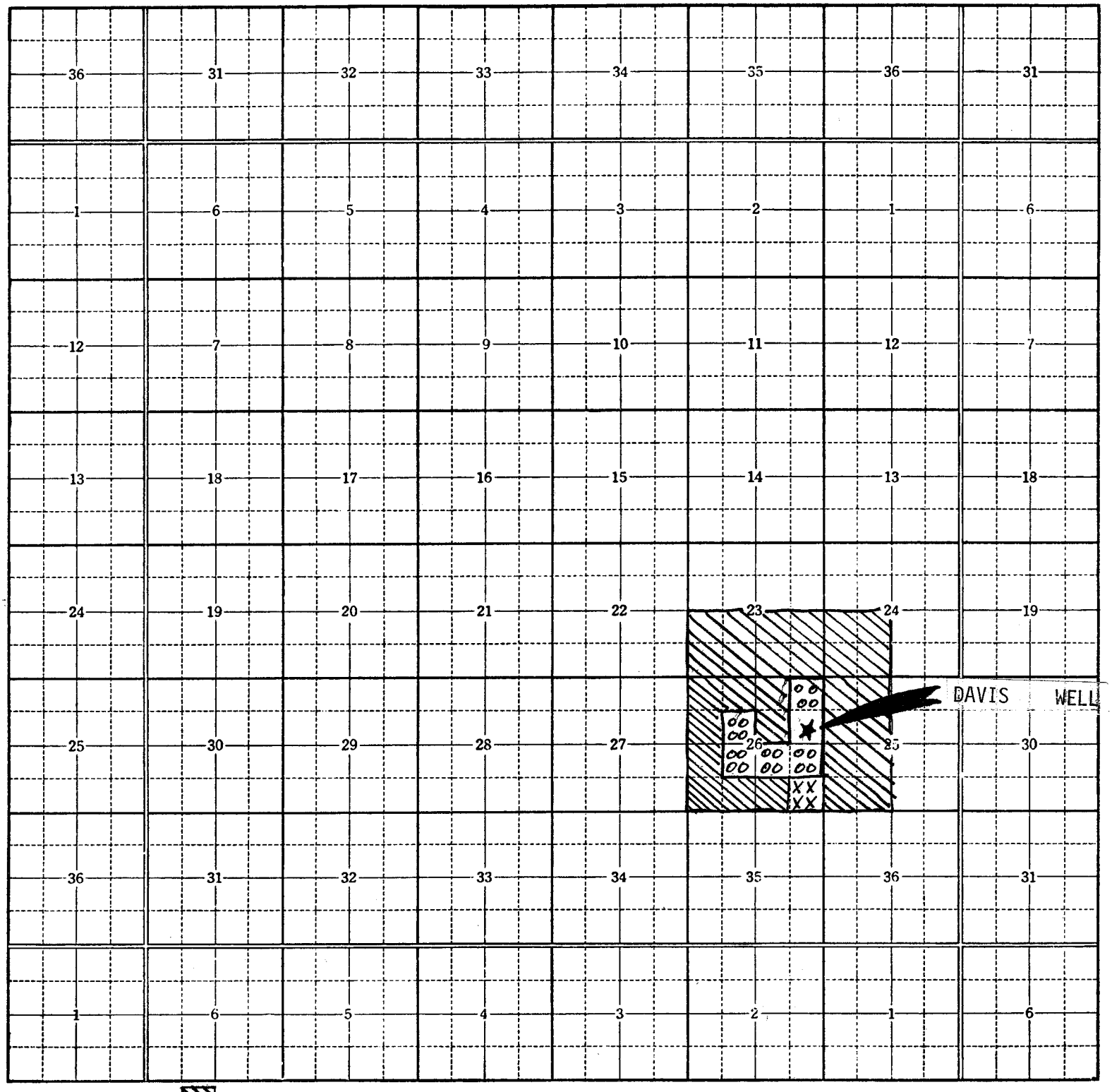


Thousand Peaks Ranchs, Inc c/o L. Moench, 255 W. 800 South SLC, UT 84101

Welby Aagard 2777 Wilshire Dr. SLC, UT 84101

Utah Protestant Camps Foundation c/o Robert McKenzie 603 Pioneer Ave.
Toole, UT 84074

CORE LABORATORIES, INC.
*Reservoir Fluid Analysis*

PROPOSED INJECTION GAS ANALYSIS
Qualitative and Quantitative analysis

File RFL 820563

Well Logan Federal No. 1
Sec. 26 T3N R7E
Summit County, Utah

HYDROCARBON ANALYSES OF SEPARATOR PRODUCTS AND CALCULATED WELL STREAM

| Component | Separator Liquid, Mol Percent | Separator Gas Mol Percent | Separator Gas GPM | Well Stream Mol Percent | Well Stream GPM |
|---|---|---|---|---|---|
| Hydrogen Sulfide | 0.00 | 0.00 | | 0.00 | |
| Carbon Dioxide | 0.37 | 0.86 | | 0.80 | |
| Nitrogen | 0.11 | 2.48 | | 2.19 | |
| Methane | 14.66 | 79.45 | | 71.49 | |
| Ethane | 10.06 | 11.05 | 3.013 | 10.93 | 2.981 |
| Propane | 11.00 | 4.17 | 1.170 | 5.01 | 1.406 |
| iso-Butane | 3.95 | 0.70 | 0.233 | 1.10 | 0.367 |
| n-Butane | 6.26 | 0.79 | 0.254 | 1.46 | 0.469 |
| iso-Pentane | 3.58 | 0.20 | 0.075 | 0.62 | 0.231 |
| n-Pentane | 3.33 | 0.15 | 0.055 | 0.54 | 0.199 |
| Hexanes | 5.23 | 0.09 | 0.037 | 0.72 | 0.300 |
| Heptanes plus | 41.45 | 0.06 | 0.028 | 5.14 | 2.952 |
| | 100.00 | 100.00 | 4.865 | 100.00 | 8.905 |

| Properties of Heptanes plus | | | |
|---|---|---|---|
| API gravity @ 60°F. | 45.7 | | |
| Density, Gm/Cc @ 60°F. | 0.7977 | | 0.798 |
| Molecular weight | 145 | 103 | 145 |

Calculated separator gas gravity (air=1.000) = 0.699
Calculated gross heating value for separator gas = 1199 BTU per cubic foot of dry gas @ 15.025 psia and 60°F.

Primary separator gas collected @ 585 psig and 75°F.
Primary separator liquid collected @ 585 psig and 75°F.

Primary separator gas/separator liquid ratio = 7404 SCF/Bbl @ 75°F.
Primary separator liquid/stock tank liquid ratio = 1.407 Bbls @ 75°F./Bbl
Primary separator gas/well stream ratio = 877.16 MSCF/MMSCF
Stock tank liquid/well stream ratio = 84.21 Bbls/MMSCF

Rate No. 5 Test

These analyses, opinions or interpretations are based on observations and material supplied by the client to whom, and for whose exclusive and confidential use, this report is made. The interpretations or opinions expressed represent the best judgement of Core Laboratories, Inc. (all errors and omissions excepted); but Core Laboratories, Inc. and its officers and employees, assume no responsibility and make no warranty or representations as to the productivity, proper operation, or profitableness of any oil, gas or other mineral well or in connection with which such report is used relied upon.

Logan Federal #1
Sec. 26 T3N R7E
Summit County, Utah
T.D.: 13,492' PBTD: 13, 307
Elevations: 7514' KB
7489' GL

PROPOSED SURFACE FACILITIES

FOR LTX SEPARATION
(Low Temperature Extraction)

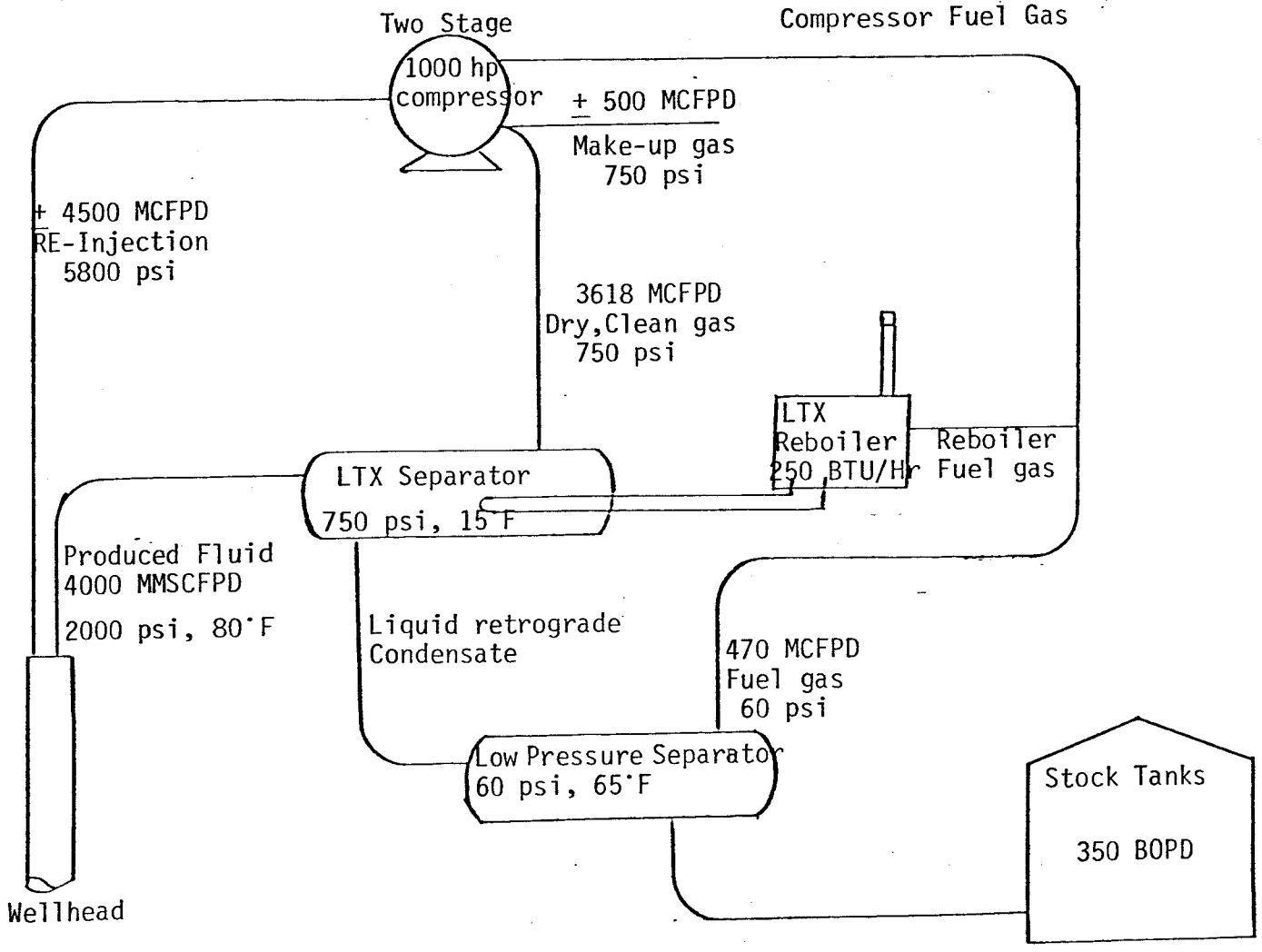


The proposed surface facilities are designed to inject dry gas at 5800 psi and 4500 MCFPD. The surface facilities will be individually controlled with high/low pressure and temperature shut-off devices designed to shut-in the facilities and to shut-in the well in the unlikely event of a malfunction. The proposed injection pressure and hydrostatic column will not initiate a fracture through the confining strata which could enable the injection fluid to enter an Underground Source of Drinking Water (USDW).

Logan Federal #1
Sec. 26 T3N-R7E
Summit County, Utah
TD: 13,492' PBTD: 13,307'
Elevations: 7514' KB
7489' GL

PROPOSED WELLBORE SCHEMATIC

Formations

depth, size, wt, grade, CPLG, hole size, cement

40', 30" cemented to surface
1008', 20", 133, K-55, STC, 26" hole, cemented to surface w/1766 sx.

Kelvin Shale

5730', 13 3/8", (54.5, 68, 72#) (K-55, S-95), STC, 17½" hole, cemented to surface w/1700 sx.

Stump

Preuss Salt

Twin Creek

11,432', 9 5/8", (47, 53.5, 62.8#), (N-80, P-110, SM95T), LTC, 12¼" hole, Cemented w/ 900 sx, Good Cement Bond, Cement top CBL 8230'

Upper Nugget Perfs: 12,804-12,826 (45 - 0.5" holes)
Gas Injection interval

Nugget

PBTD 13,307'

13,488', 7", (35, 38#) P-110, LTC, 8½" hole, Cemented w/ 1000 sx, Good Cement Bond, Cement top from CBL 11,800'. Casing Tested to 5000 psi.

Lower Nugget Perfs: 12860-12895 (44-0.36" holes)
~~12910-12926 (19-0.36" holes)~~
Gas production Interval

Wireline set Baker Model "DB" drillable production packer set at 12,845 with tailpipe and 2.197" ID "R" Nipple

2 7/8", 6.5#, EUE, 8rd, N-80 tubing.

Perforations 12804-12826 and 12860-12895 were stimulated with 200 bbls Nugget Crude with 10 gal/M HYFLO IV and 5 gal/M FR-5 with 45 (1.1 sg) ball sealers.

115

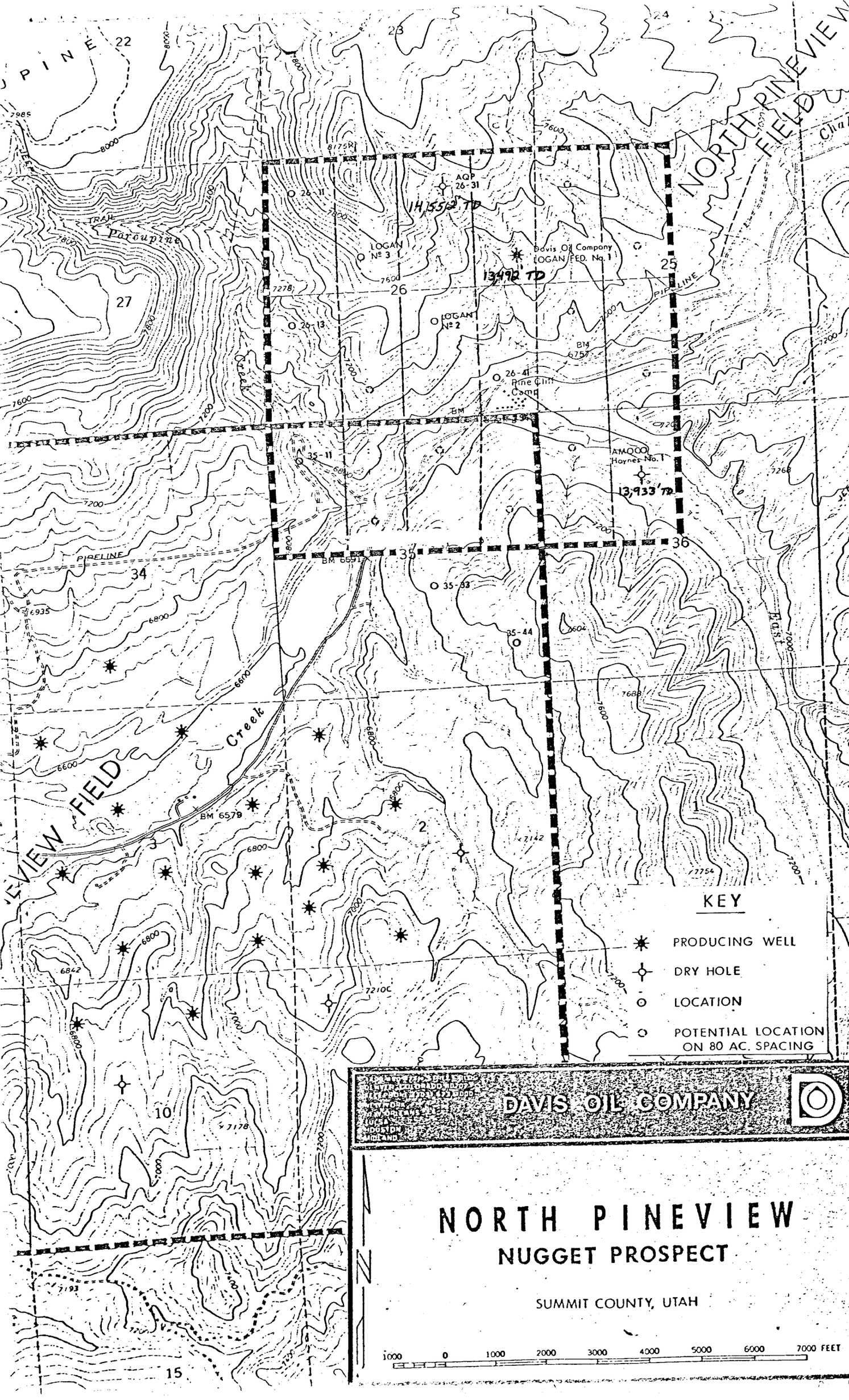

NORTH PINEVIEW FIELD
PINEVIEW FIELD
Porcupine
Creek
TRAIL
PIPELINE
AQP 26-31
14,552' TD
LOGAN Nº 3
Davis Oil Company LOGAN FED. No. 1
13,492' TD
LOGAN Nº 2
26-11
26-13
26-41
Pine Cliff Camp
BM 6757
AMOCO Haynes No. 1
13,933' TD
35-11
35-33
35-44
BM 6591
BM 6579
East
KEY
PRODUCING WELL
DRY HOLE
LOCATION
POTENTIAL LOCATION ON 80 AC. SPACING
DAVIS OIL COMPANY
NORTH PINEVIEW
NUGGET PROSPECT
SUMMIT COUNTY, UTAH
1000 0 1000 2000 3000 4000 5000 6000 7000 FEET

CAUSE NO. UIC-~~012~~
013

Notice of hearing was sent to the following:

Newspaper Agency Corp.
Summitt County Bee
Park Record

Mr. Bob Pruitt, Esq.
Pruitt & Gushee
1850 Benefitial Life Tower
Salt Lake City, UT

Davis Oil Company
410 17th Street
Suite 1400
Denver, CO 80202

The Anschutz Corp.
Michael Stead
2400 Anaconda Tower
555 - 17th St.
Denver, 80202

Amoco Production Company (USA)
Amoco Building
17th & Broadway
Denver, CO 80202

Thousand Peaks
Ranchs, c/o L Moench
255 West 800 South
Salt Lake City, UT 84101

Welby Aagard
2777 Wilshire Dr.
Salt Lake City, UT 84101
Utah Protestant Camps Foundation
c/o R. McKenzie
603 Pioneer Ave.
Tooele, UT 84074

Minerals Manage ment Service
2000 Administration Bldg.
1745 West 1700 South
Salt Lake City, UT 84104

U.S. Environmental Protection Agency
Attn: Mike Strieby
~~XXXX~~ 1860 Lincoln St.
Denver, CO 80295

12/9/82
P.F.

Ut. Dept. of Health
Bureau of Water Pollution Control
Attn: Jerry Riding
Room 410
150 West North Temple
Salt Lake City, UT 84103

BEFORE THE DIVISION OF OIL, GAS AND MINING
Room 4241 State Office Building
Salt Lake City, Utah 84114

---

| | | |
|---|---|---|
| IN THE MATTER OF THE APPLICATION OF DAVIS OIL COMPANY, FOR ADMINISTRATIVE APPROVAL TO INJECT GAS INTO A WELL LOCATED IN SECTION 26, TOWNSHIP 3 NORTH, RANGE 7 EAST, SUMMIT COUNTY, UTAH. | ) | CAUSE NO. UIC-012 |

---

THE STATE OF UTAH TO ALL PERSONS, OWNERS, PRODUCER, OPERATORS, PURCHASERS AND TAKERS OF OIL AND GAS AND ALL OTHER INTERESTED PERSONS, PARTICULARLY IN SUMMIT COUNTY, UTAH:

NOTICE IS HEREBY GIVEN that Davis Oil Company, 410 17th street, Suite 1400, Denver, Colorado 80202, is requesting that the Division authorize the approval to convert the well mentioned below, to a gas injection well as follows:

Township 3 North, Range 7 East

Sec. 26, Well # Logan Fed. #1

INJECTION ZONE: Nugget Sandstone 12,804' to 12826'

MAXIMUM INJECTION PRESSURE: 6,000 psi

MAXIMUM INJECTION RATE: 5,000,000 SCFPD

This application will be granted unless objections are filed with the Division of Oil, Gas and Mining within fifteen days after publication of this Notice. Objections if any, should be mailed to: Division of Oil, Gas and Mining, Room 4241 State Office Building, Salt Lake City, Utah 84114.

STATE OF UTAH
DIVISION OF OIL, GAS AND MINING

for Paula J. Frank

PAULA J. FRANK
Secretary of the Board

STATE OF UTAH
NATURAL RESOURCES & ENERGY
Oil, Gas & Mining

Scott M. Matheson, Governor
Temple A. Reynolds, Executive Director
Cleon B. Feight, Division Director

4241 State Office Building • Salt Lake City, UT 84114 • 801-533-5771

November 26, 1982

Newspaper Agency Corp.
143 South Main
Salt Lake City, UT

RE: CAUSE NO. UIC-012

Gentlemen:

Attached hereto is a Notice of Hearing/Order to Show Cause, before the Board of Oil, Gas and Mining, Department of Natural Resources, State of Utah.

It is requested that this notice be published ONCE ONLY, as soon as possible but no later than the 1st day of December, 1982. In the event that said notice cannot be published by this date, please notify this office immediately by calling 533-5771.

Upon completion of this request, please send proof of publication and statement of cost to the Division of Oil, Gas and Mining, 4241 State Office Building, Salt Lake City, Utah 84114.

Very, truly yours,

DIVISION OF OIL, GAS AND MINING

Pfor Paula J. Frank

PAULA FRANK
Secretary of the Board

Attachment

Board/Charles R. Henderson, Chairman • John L. Bell • E. Steele McIntyre • Edward T. Beck
Robert R. Norman • Margaret R. Bird • Herm Olsen

an equal opportunity employer • please recycle paper

STATE OF UTAH
NATURAL RESOURCES & ENERGY
Oil, Gas & Mining

Scott M. Matheson, Governor
Temple A. Reynolds, Executive Director
Cleon B. Feight, Division Director

4241 State Office Building • Salt Lake City, UT 84114 • 801-533-5771

November 26, 1982

Park Record
Legal Advertising
Park City, UT 84060

RE: CAUSE NO. UIC-012

Gentlemen:

Attached hereto is a Notice of Hearing/Order to Show Cause, before the Board of Oil, Gas and Mining, Department of Natural Resources, State of Utah.

It is requested that this notice be published ONCE ONLY, as soon as possible but no later than the 1st day of December, 1982. In the event that said notice cannot be published by this date, please notify this office immediately by calling 533-5771.

Upon completion of this request, please send proof of publication and statement of cost to the Division of Oil, Gas and Mining, 4241 State Office Building, Salt Lake City, Utah 84114.

Very, truly yours,

DIVISION OF OIL, GAS AND MINING

Mfor Paula J. Frank

PAULA FRANK
Secretary of the Board

Attachment

Board: Charles R. Henderson, Chairman • John L. Bell • E. Steele McIntyre • Edward T. Beck
Robert R. Norman • Margaret R. Bird • Herm Olsen

an equal opportunity employer • please recycle paper

STATE OF UTAH
NATURAL RESOURCES & ENERGY
Oil, Gas & Mining

Scott M. Matheson, Governor
Temple A. Reynolds, Executive Director
Cleon B. Feight, Division Director

4241 State Office Building • Salt Lake City, UT 84114 • 801-533-5771

November 26, 1982

Summitt County Bee
Legal Advertising
Coalville, UT 84017

RE: CAUSE NO. UIC-012

Gentlemen:

Attached hereto is a Notice of Hearing/Order to Show Cause, before the Board of Oil, Gas and Mining, Department of Natural Resources, State of Utah.

It is requested that this notice be published ONCE ONLY, as soon as possible but no later than the 1st day of December, 1982. In the event that said notice cannot be published by this date, please notify this office immediately by calling 533-5771.

Upon completion of this request, please send proof of publication and statement of cost to the Division of Oil, Gas and Mining, 4241 State Office Building, Salt Lake City, Utah 84114.

Very, truly yours,

DIVISION OF OIL, GAS AND MINING

Pfor Paula J. Frank

PAULA FRANK
Secretary of the Board

Attachment

Board/Charles R. Henderson, Chairman • John L. Bell • E. Steele McIntyre • Edward T. Beck
Robert R. Norman • Margaret R. Bird • Herm Olsen

an equal opportunity employer • please recycle paper

UIC-012

CLASS II FILE NOTATIONS
* * * *

DATE FILED: 11-24-82 OPERATOR: Davis Oil Co. WELL NO. Logan Fed. #1

Sec 26 T. 3N R. 7E QRT/QRT: SENE COUNTY: Summit

New Well? _____ Conversion? X Disposal _____ Enhanced Recovery X - Gas

* * * * * * * *

SURETY/Bond? Yes Card Indexed? Yes API Number: 43-043-30186

APPLICATION FILE COMPLETION

Completed Form DOGM-UIC-1? Yes

Plat identifying location and total depth of the following, Rule I-5(b)(1):

Surface Owner(s): X Operators : X water well(s) _____, abandoned well(s) ____, producing wells or drilling well(s) _____, dry holes _____.

Completed Rule I-5(b)(2)? Yes, (i) _____, (ii) _____

Schemetic diagram of Well: TD: 13492, PBTD: 13307', Depth of Inj/Disp interval: 12,804, geologic name of inj/dis interval Nugget Sandstone Casing and cement: top Surface, bottom 11,800', Size of: casing 20", 13 3/8" 9 5/8" + 7" @ 13,488 tubing 2 3/8" @ 12845', depth of packer: 12,845'. Assessment of existing cement bond: Good Location of Bottomhole: 507 SL 2288 WL MAXIMUM INJECTION RATE: 5,000,000 SCFPD MAXIMUM SURFACE INJECTION PRESSURE: 6,000 psi.

Proposed Operating Data:

Procedure for controlling injection rates and pressures: _____ Geologic name: Nugget Sandstone depth, 12860' 12926' location of injection fluid source? Analysis of water to be injected N/A tds, water of injection formation N/A tds., EXEMPTION REQUIRED? NO.

Injection zone and confining zone data: lithologic description _____, geologic name _____, (thickness 12,300 Intervening, depth _____, lateral extent _____

USDW's that may be affected by injection: geologic name _____, lateral extent _____, depth to the top and bottom of all known USDW's Base of Fresh Water 504'.

Contingency plans? Facilities controlled by high/low pressure & temperature cut-off.

Results of formation testing? _____.
Description of mechanical integrity test _____, injection procedure _____.

* * * * * * *

CHECKED BY: UIC ADMINISTRATOR: TP

UIC GEOLOGIST: _____

Application Complete? Yes Notice Published X, Date: 11/26/82
DIRECTOR: Approved? _____, approval letter sent ___, Requires hearing YES.

UIC-013

THE ANSCHUTZ CORPORATION

2400 ANACONDA TOWER
555 SEVENTEENTH STREET
DENVER, COLORADO 80202
TELEPHONE 303-825-6100
TWX 910-931-2620

RECEIVED
DEC 06 1982
DIVISION OF
OIL, GAS & MINING

December 2, 1982

Division of Oil, Gas & Mining
Room 4241 State Office Building
Salt Lake City, Utah 84114

Attention: Mr. Cleon B. Feight

Re: Cause No. U.I.C.-012

Dear Sirs:

We are in receipt of the application of Davis Oil Company for administrative approval to inject gas into a well located in Section 26, Township 3 North, Range 7 East, Summit County, Utah, Cause No. UIC-012. The Anschutz Corporation hereby enters its objection to the granting of this application administratively and requests that the matter be scheduled for hearing, preferably at the Board's next regularly scheduled meeting on December 30, 1982.

You will recall that at the October 28, 1982 hearing which considered the spacing for the area surrounding this well under Cause No.'s 200-1 and 203-1, that Anschutz indicated that we would not object to the injection of gas into this well for pressure maintenance. Additionally, we requested that in order to protect the reservoir and the rights of other interested parties in the field a detailed pressure monitoring and reporting program should be required by the Board. Since the subject application does not indicate the kind of gas to be injected and does not provide any indication of the monitoring program to be followed, we request a hearing to review the injection program and insure that the reservoir will not be damaged.

Sincerely,

Michael A. Stead
Production Manager

MAS/ahs
cc: MAW, JDH, RAF, NRB

T.P. Stockmar
Holme Roberts & Owen

Alan Wood
Amoco Production Company

Jim Dixon
American Quasar

R.W. Manry
Davis Oil Company

**Amoco Production Company (USA)**

Denver Region
Amoco Building
17th & Broadway
Denver, Colorado 80202
303-830-4040

December 2, 1982

Mr. Cleon B. Feight, Director
Utah Division of Oil, Gas and Mining
4241 State Office Building
Salt Lake City, UT 84114

RECEIVED
DEC 06 1982
DIVISION OF
OIL, GAS & MINING

File: HDM-271-986.511

Dear Mr. Feight:

Application By Davis Oil Company, For
Administrative Approval To Inject Gas
Into The Logan Federal Well No. 1
Section 26 - Township 3 North, Range 7 East
Summit County, Utah

Amoco Production Company, as an owner in the affected area, has received notice of the application by Davis Oil Company to inject gas into the Logan Federal Well No. 1 in Section 26 - Township 3 North, Range 7 East, Summit County, Utah. We are opposed to the granting of this application by administrative approval and respectfully request that this matter be set for hearing before the Utah Board.

We are very much concerned that the granting of this application may result in damage to this retrograde gas condensate reservoir and feel that a hearing is required so that all affected parties may learn the specifics of Davis Oil Company's plan to reinject produced gas. As we stated at the October 28, 1982 spacing hearing for this area, we feel that gas injection into this reservoir, for pressure maintenance, should be performed under the auspices of a unit which would protect the correlative rights of all parties and would also allow all affected owners to determine the proper reservoir management scheme. In addition, we stated that we would have no objection to the reinjection of produced gas by Davis as long as it was recognized that it was an experiment with a finite life of 6 months and that there were provisions implemented which could be used to determine when and if the experiment has failed. Specifically, it was recommended that if the producing GOR exceeded 15,000:1 then the experiment would have deemed to have failed and the well would then be placed under production restrictions in order to protect the reservoir from damage.

A copy of this letter has been sent to Davis Oil Company as well as the other affected owners as shown on the attached list.

R.B. Giles

R.B. Giles
CAW/klk

cc: R.A. Sheppard-Building
G.L. Paulson-Building

Mailing List
Working Interest Owners
Within
Chalk Creek Area

American Quasar Petroleum Co.
1700 Broadway, Suite 707
Denver, CO 80290

John D. Haley
The Anschutz Corporation
555 17th Street, Suite 2400
Denver, CO 80202

A.L. Valentine
Champlin Petroleum Company
P.O. Box 1257
Englewood, CO 80150

Vernon Hill
Cities Service Company
1600 Broadway, Suite 900
Denver, CO 80202

R.L. Hocker
Cities Service Company
P.O. Box 300
Tulsa, OK 74102

Conquest Exploration
P.O. Box 4512
Houston, TX 77210

Davis Oil Company
410 17th Street, Suite 1400
Denver, CO 80202

Deca Energy Corp.
410 17th Street, Suite 2210
Denver, CO 80202

El Paso Natural Gas Corporation
P.O. Box 990
Farmington, NM 87401

Energetics, Inc.
102 Inverness Terrace East
Englewood, CO 80112

Kennedy & Mitchell, Inc.
3190 S. Wadsworth Blvd
P.O. Box 27-D
Denver, CO 80227

North Central Oil Corporation
600 Savoy Dune, Suite 600
Houston, TX 77036

Shell Oil Company
Rocky Mountain Division Production
P.O. Box 831
Houston, TX 77001

Patricia A. Moore
Sun Production Company
Campbell Centre II
P.O. Box 2880
Dallas, TX 75221

STATE OF UTAH
NATURAL RESOURCES & ENERGY
Oil, Gas & Mining

Scott M. Matheson, Governor
Temple A. Reynolds, Executive Director
Cleon B. Feight, Division Director

4241 State Office Building • Salt Lake City, UT 84114 • 801-533-5771

December 8, 1982

Summit County Bee
Legal Advertising
Coalville, UT 84017

RE: Notice of Hearing
Cause Nos. UIC-013, 203-2
and 203-3

Gentlemen:

Attached hereto is a Notice of Hearing/Order to Show Cause, before the Board of Oil, Gas and Mining, Department of Natural Resources and Energy, State of Utah.

It is requested that this notice be published ONCE ONLY, as soon as possible, but no later than the 16th day of December, 1982. In the event that said notice cannot be published by this date, please notify this office immediately by calling 533-5771.

Upon completion of this request, please send proof of publication and statement of cost to the Division of Oil, Gas and Mining, 4241 State Office Building, Salt Lake City, Utah 84114.

Very truly yours,

PAULA J. FRANK
Secretary of the Board

Attachment

Board/Charles R. Henderson, Chairman • John L. Bell • E. Steele McIntyre • Edward T. Beck
Robert R. Norman • Margaret R. Bird • Herm Olsen

an equal opportunity employer • please recycle paper

STATE OF UTAH
NATURAL RESOURCES & ENERGY
Oil, Gas & Mining

Scott M. Matheson, Governor
Temple A. Reynolds, Executive Director
Cleon B. Feight, Division Director

4241 State Office Building • Salt Lake City, UT 84114 • 801-533-5771

December 8, 1982

Park Record
Legal Advertising
Park City, UT 84060

RE: Notice of Hearing
Cause Nos. UIC-013, 203-2
and 203-3

Gentlemen:

Attached hereto is a Notice of Hearing/Order to Show Cause, before the Board of Oil, Gas and Mining, Department of Natural Resources and Energy, State of Utah.

It is requested that this notice be published ONCE ONLY, as soon as possible, but no later than the 16th day of December, 1982. In the event that said notice cannot be published by this date, please notify this office immediately by calling 533-5771.

Upon completion of this request, please send proof of publication and statement of cost to the Division of Oil, Gas and Mining, 4241 State Office Building, Salt Lake City, Utah 84114.

Very truly yours,

PAULA J. FRANK
Secretary of the Board

Attachment

Board Charles R. Henderson, Chairman • John L. Bell • E. Steele McIntyre • Edward T. Beck
Robert R. Norman • Margaret R. Bird • Herm Olsen

an equal opportunity employer • please recycle paper

STATE OF UTAH
NATURAL RESOURCES & ENERGY
Oil, Gas & Mining

Scott M. Matheson, Governor
Temple A. Reynolds, Executive Director
Cleon B. Feight, Division Director

4241 State Office Building • Salt Lake City, UT 84114 • 801-533-5771

December 8, 1982

Newspaper Agency Corp.
Legal Advertising
143 S. Main
Salt Lake City, UT 84101

RE: Notice of Hearing
Cause Nos. UIC-013, 203-2
and 203-3

Gentlemen:

Attached hereto is a Notice of Hearing/Order to Show Cause, before the Board of Oil, Gas and Mining, Department of Natural Resources and Energy, State of Utah.

It is requested that this notice be published ONCE ONLY, as soon as possible, but no later than the 16th day of December, 1982. In the event that said notice cannot be published by this date, please notify this office immediately by calling 533-5771.

Upon completion of this request, please send proof of publication and statement of cost to the Division of Oil, Gas and Mining, 4241 State Office Building, Salt Lake City, Utah 84114.

Very truly yours,

PAULA J. FRANK
Secretary of the Board

Attachment

Board/Charles R. Henderson, Chairman • John L. Bell • E. Steele McIntyre • Edward T. Beck
Robert R. Norman • Margaret R. Bird • Herm Olsen

an equal opportunity employer • please recycle paper

STATE OF UTAH
NATURAL RESOURCES & ENERGY
Water Rights

Scott M. Matheson, Governor
Temple A. Reynolds, Executive Director
Dee C. Hansen, State Engineer

1636 West North Temple • Salt Lake City, UT 84116 • 801-533-6071

8 December 1982

Gilbert L. Hunt
Division of Oil, Gas & Mining
4241 State Office Building
Salt Lake City, Utah 84114

RE: Injection Well
Summit County, Utah
DAVIS, Logan Fed. #1
SEC, 26, 3N, 7E

Dear Mr. Hunt:

Regarding your letter of December 2, 1982, our records show a 6 inch diameter, 63 foot deep well in the SE1/4 SE1/4, Sec.26, T3N, R7E, SLB&M. The well is owned by the Utah Protestant Camps Foundation, and is used for the domestic purposes of 100 people and for fire protection.

Information available to us (primarily from the U.S. Geological Survey) indicates that there is no definite depth to the base of fresh water. Fresh water is known to occur in most of the formations underlying this area. However, most formations are not, at present, being utilized as a drinking water source.

I hope you find this information useful.

Sincerely yours,

William E. Schlotthauer

William E. Schlotthauer
Hydrologic Engineer

RECEIVED
DEC 10 1982
DIVISION OF
OIL, GAS & MINING

Deputy State Engineer/Earl M. Staker Directing Engineers/Harold D. Donaldson • Donald C. Norseth
Stanley Green • Robert L. Morgan

an equal opportunity employer • please recycle paper

# PROOF OF PUBLICATION

STATE OF UTAH, }
County of Summit, } ss.

I, Shirley B. Phelps

being first duly sworn, depose and say that I am the

bookkeeper of The Summit County Bee, a weekly newspaper of general circulation, published once each week at Coalville, Utah, that the notice attached hereto and which is a

Notice of Hearing cause no. UIC-012

was published in said newspaper for 1 con~~secutive~~ issue~~s~~, the first publication having been made on the 3 day of December, 1982, ~~and the last on the day of, 19, that~~ said notice was published in the regular and entire issue of every number of the paper during the period and times of publication, and the same was published in the newspaper proper and not in any supplement.

Shirley B Phelps

Subscribed and sworn to before me this 3 day of December, 1982.

Notary Public

My commission expires My Commission Expires Sept. 1, 1985, 19____.

BEFORE THE
DIVISION OF OIL,
GAS AND MINING
Room 4241
State Office Building
Salt Lake City,
Utah 84114

IN THE MATTER OF THE APPLICATION OF DAVIS OIL COMPANY, FOR ADMINISTRATIVE APPROVAL TO INJECT GAS INTO A WELL LOCATED IN SECTION 26, TOWNSHIP 3 NORTH, RANGE 7 EAST, SUMMIT COUNTY, UTAH.

THE STATE OF UTAH TO ALL PERSONS, OWNERS, PRODUCER, OPERATORS, PURCHASERS AND TAKERS OF OIL AND GAS AND ALL OTHER INTERESTED PERSONS, PARTICULARLY IN SUMMIT COUNTY, UTAH:

NOTICE IS HEREBY GIVEN that Davis Oil Company, 410 17th Street, Suite 1400, Denver, Colorado 80202, is requesting that the Division authorize the approval to convert the well mentioned below, to a gas injection well as follows:

Township 3 North,
Range 7 East
Sec. 26, Well #
Logan Fed. #1

INJECTION ZONE: Nugget Sandstone 12,804' to 12826'

MAXIMUM INJECTION PRESSURE: 6,000 psi

MAXIMUM INJECTION PRESSURE: 6,000 psi

MAXIMUM INJECTION RATE: 5,000,000 SCFPD

This application will be granted unless objections are filed with the Division of Oil, Gas and Mining within fifteen days after publication of the Notice. Objections if any, should be mailed to: Division of Oil, Gas and Mining, Room 4241 State Office Building, Salt Lake City, Utah 84114.

STATE OF UTAH
DIVISION OF OIL,
GAS AND MINING

PAULA J. FRANK
Secretary of the Board

Published in the
Summit County Bee
December 3, 1982.

# PROOF OF PUBLICATION

STATE OF UTAH, }
County of Summit, } ss.

I, Shirley B. Phelps

being first duly sworn, depose and say that I am the

bookkeeper of The Summit County Bee, a weekly newspaper of general circulation. published once each week at Coalville, Utah, that the notice attached hereto and which is a

Notice of Hearing Cause No. UIC-012

was published in said newspaper for 1 ~~consecutive~~ issue~~s~~, the first publication having been made on the 3 day of December, 1982 ~~; and the last on the day of, 19~~, that said notice was published in the regular and entire issue of every number of the paper during the period and times of publication, and the same was published in the newspaper proper and not in any supplement.

Shirley B. Phelps

Subscribed and sworn to before me this 3 day of December, 1982.

Notary Public

My commission expires My Commission Expires Sept. 1, 1985, 19

RECEIVED
DEC 06 1982
DIVISION OF
OIL, GAS & MINING

BEFORE THE
DIVISION OF OIL,
GAS AND MINING
Room 4241
State Office Building
Salt Lake City,
Utah 84114

IN THE MATTER OF THE APPLICATION OF DAVIS OIL COMPANY, FOR ADMINISTRATIVE APPROVAL TO INJECT GAS INTO A WELL LOCATED IN SECTION 26, TOWNSHIP 3 NORTH, RANGE 7 EAST, SUMMIT COUNTY, UTAH.

THE STATE OF UTAH TO ALL PERSONS, OWNERS, PRODUCER, OPERATORS, PURCHASERS AND TAKERS OF OIL AND GAS AND ALL OTHER INTERESTED PERSONS, PARTICULARLY IN SUMMIT COUNTY, UTAH:

NOTICE IS HEREBY GIVEN that Davis Oil Company, 410 17th Street, Suite 1400, Denver, Colorado 80202, is requesting that the Division authorize the approval to convert the well mentioned below, to a gas injection well as follows:

Township 3 North,
Range 7 East
Sec. 26, Well #
Logan Fed. #1

INJECTION ZONE: Nugget Sandstone 12, 804' to 12826'

MAXIMUM INJECTION PRESSURE: 6,000 psi

MAXIMUM INJECTION PRESSURE: 6,000 psi

MAXIMUM INJECTION RATE: 5, 000,000 SCFPD

This application will be granted unless objections are filed with the Division of Oil, Gas and Mining within fifteen days after publication of the Notice. Objections if any, should be mailed to: Division of Oil, Gas and Mining, Room 4241 State Office Building, Salt Lake City, Utah 84114.

STATE OF UTAH
DIVISION OF OIL,
GAS AND MINING

PAULA J. FRANK
Secretary of the Board

Published in the Summit County Bee December 3, 1982.

ADM-35B

# Affidavit of Publication

**STATE OF UTAH.**
**County of Salt Lake** } ss.

Debra Miller

**BEFORE THE DIVISION OF OIL, GAS AND MINING**
**Room 4241**
**State Office Building**
**Salt Lake City,**
**Utah 84114**
**CAUSE NO. UIC-012**

IN THE MATTER OF THE APPLICATION OF DAVIS OIL COMPANY, FOR ADMINISTRATIVE APPROVAL TO INJECT GAS INTO A WELL LOCATED IN SECTION 26, TOWNSHIP 3 NORTH, RAGE 7 EAST, SUMMIT COUNTY, UTAH.

THE STATE OF UTAH TO ALL PERSONS, OWNERS, PRODUCER, OPERATORS, PURCHASERS AND TAERS OF OIL AND GAS AND ALL OTHER INTERESTED PERSONS, PARTICULARLY IN SUMMIT COUNTY, UTAH:

NOTICE IS HEREBY GIVEN that Davis Oil Company, 410 17th street, Suite 1400, Denver, Colorado 80202, is requesting that the Division authorize the approval to convert the well mentioned below, to a gas injection well as follows:

**Township 3 North**
**Range 7 East**
Sec. 26, Well #
Logan Fed. #1

INJECTION ZONE: Nugget Sandstone 12,804' to 12826'

MAXIMUM INJECTION PRESSURE: 6,000 psi

MAXIMUM INJECTION RATE: 5,000,000 SCFPD

This application will be granted unless objections are filed with the Division of Oil, Gas and Mining within fifteen days after publication of this Notice. Objections if any, should be mailed to: Division of Oil, Gas and Mining, Room 4241 State Office Building, Salt Lake City, Utah 84114

STATE OF UTAH
DIVISION OF OIL, GAS AND MINING
PAULA J. FRANK
Secretary of the Board

D-28

*Being first duly sworn, deposes and says that he is legal advertising clerk of THE SALT LAKE TRIBUNE, a daily newspaper printed in the English language with general circulation in Utah, and published in Salt Lake City, Salt Lake County in the State of Utah, and of the DESERET NEWS a daily (except Sunday) newspaper printed in the English language with general circulation in Utah, and published in Salt Lake City, Salt Lake County, in the State of Utah.*

*That the legal notice of which a copy is attached hereto*

Pub. Cause No. UIC-012

*was published in said newspapers on*

Dec. 1, 1982

Debra Miller
*Legal Advertising Clerk*

*Subscribed and sworn to before me this* 3rd *day of*

December *A.D. 19* 82.

Joyce L. Marlar
*Notary Public*

*My Commission Expires*

July 23, 1986

ADM-358

# Affidavit of Publication

**STATE OF UTAH.**
**County of Salt Lake** } **ss.**

Debra Miller

*Being first duly sworn, deposes and says that he is legal advertising clerk of THE SALT LAKE TRIBUNE, a daily newspaper printed in the English language with general circulation in Utah, and published in Salt Lake City, Salt Lake County in the State of Utah, and of the DESERET NEWS a daily (except Sunday) newspaper printed in the English language with general circulation in Utah, and published in Salt Lake City, Salt Lake County, in the State of Utah.*

*That the legal notice of which a copy is attached hereto*

Pub. Cause No. UIC-012

*was published in said newspapers on*

Dec. 1, 1982

Debra Miller
*Legal Advertising Clerk*

*Subscribed and sworn to before me this* 3rd *day of*

December *A.D. 19* 82.

Joyce L. Maclean
*Notary Public*

*My Commission Expires*

July 23, 1986

**BEFORE THE DIVISION OF OIL, GAS AND MINING**
**Room 4241**
**State Office Building**
**Salt Lake City,**
**Utah 84114**
**CAUSE NO. UIC-012**

IN THE MATTER OF THE APPLICATION OF DAVIS OIL COMPANY, FOR ADMINISTRATIVE APPROVAL TO INJECT GAS INTO A WELL LOCATED IN SECTION 26, TOWNSHIP 3 NORTH, RAGE 7 EAST, SUMMIT COUNTY, UTAH.

THE STATE OF UTAH TO ALL PERSONS, OWNERS, PRODUCER, OPERATORS, PURCHASERS AND TAERS OF OIL AND GAS AND ALL OTHER INTERESTED PERSONS, PARTICULARLY IN SUMMIT COUNTY, UTAH:

NOTICE IS HEREBY GIVEN that Davis Oil Company, 410 17th street, Suite 1400, Denver, Colorado 80202, is requesting that the Division authorize the approval to convert the well mentioned below, to a gas injection well as follows:

**Township 3 North**
**Range 7 East**
Sec. 26, Well #
Logan Fed. #1

INJECTION ZONE: Nugget Sandstone 12,804' to 12826'

MAXIMUM INJECTION PRESSURE: 6,000 psi

MAXIMUM INJECTION RATE: 5,000,000 SCFPD

This application will be granted unless objections are filed with the Division of Oil, Gas and Mining, within fifteen days after publication of this Notice. Objections if any, should be mailed to: Division of Oil, Gas and Mining, Room 4241 State Office Building, Salt Lake City, Utah 84114

STATE OF UTAH
DIVISION OF OIL, GAS AND MINING
PAULA J. FRANK
Secretary of the Board

D-28

ADM-35B

# Affidavit of Publication

**STATE OF UTAH.**
**County of Salt Lake** } ss.

NOTICE OF HEARING
CAUSE NO. UIC-013
BEFORE THE BOARD OF
OIL, GAS AND MINING
DEPARTMENT OF NATURAL
RESOURCES AND ENERGY
in and for the
STATE OF UTAH

IN THE MATTER OF THE APPLICATION OF DAVIS OIL COMPANY FOR APPROVAL TO INJECT GAS INTO A WELL LOCATED IN SECTION 26, TOWNSHIP 3 NORTH, RANGE 7 EAST, SUMMIT COUNTY, UTAH

THE STATE OF UTAH TO ALL PERSONS, OWNERS, PRODUCERS, OPERATORS, PURCHASERS AND TAKERS OF OIL AND GAS AND ALL OTHER INTERESTED PERSONS, PARTICULARLY IN SUMMIT COUNTY, UTAH:

NOTICE IS HEREBY GIVEN that Davis Oil Company, 410 17th Street, Suite 1400, Denver, Colorado 80202, is requesting that the Division authorize the approval to convert the well mentioned below to a gas injection well as follows:

**Township 3 North,**
**Range 7 East**
Section 26,
Logan Federal #1 Well

INJECTION ZONE: Nugget Sandstone 12,804' to 12,826'
MAXIMUM INJECTION PRESSURE: 6,000 psi
MAXIMUM INJECTION RATE: 5,000,000 SCFPD

Objections having been received from Amoco Production Company and American Quasar Petroleum Company, a hearing will be held on Thursday, December 30, 1982, at 10:00 a.m., in Room 320 of the State Capitol Building, Salt Lake City, Utah, in the above entitled matter, at which time all persons, firms and corporations interested may, if they so desire, appear and be heard.

DATED this 7th day of December, 1982.

STATE OF UTAH
BOARD OF OIL,
GAS AND MINING
PAULA J. FRANK
Secretary of the Board

Division of Oil,
Gas and Mining
4241 State Office Bldg.
Salt Lake City, Ut. 84114
Phone: (801)533-5771
A-61

Debra Miller

*Being first duly sworn, deposes and says that he is legal advertising clerk of THE SALT LAKE TRIBUNE, a daily newspaper printed in the English language with general circulation in Utah, and published in Salt Lake City, Salt Lake County in the State of Utah, and of the DESERET NEWS a daily (except Sunday) newspaper printed in the English language with general circulation in Utah, and published in Salt Lake City, Salt Lake County, in the State of Utah.*

*That the legal notice of which a copy is attached hereto*

Pub. notice of hearing Cause No. UIC-013

*was published in said newspapers on*

Dec. 16, 1982

Debra Miller
*Legal Advertising Clerk*

*Subscrioed and sworn to before me this* 23rd *day of*

December *A.D. 19* 82.

*Notary Public*

*My Commission Expires*

Oct. 1, 1986

ADM-358

# Affidavit of Publication

**STATE OF UTAH.**
**County of Salt Lake** } ss.

**NOTICE OF HEARING**
**CAUSE NO. UIC-013**
**BEFORE THE BOARD OF OIL, GAS AND MINING**
**DEPARTMENT OF NATURAL RESOURCES AND ENERGY**
**in and for the STATE OF UTAH**

IN THE MATTER OF THE APPLICATION OF DAVIS OIL COMPANY FOR APPROVAL TO INJECT GAS INTO A WELL LOCATED IN SECTION 26, TOWNSHIP 3 NORTH, RANGE 7 EAST, SUMMIT COUNTY, UTAH

THE STATE OF UTAH TO ALL PERSONS, OWNERS, PRODUCERS, OPERATORS, PURCHASERS AND TAKERS OF OIL AND GAS AND ALL OTHER INTERESTED PERSONS, PARTICULARLY IN SUMMIT COUNTY, UTAH:

NOTICE IS HEREBY GIVEN that Davis Oil Company, 410 17th Street, Suite 1400, Denver, Colorado 80202, is requesting that the Division authorize the approval to convert the well mentioned below to a gas injection well as follows:

**Township 3 North,**
**Range 7 East**
Section 26,
Logan Federal #1 Well

INJECTION ZONE: Nugget Sandstone 12,804' to 12,826'
MAXIMUM INJECTION PRESSURE: 6,000 psi
MAXIMUM INJECTION RATE: 5,000,000 SCFPD

Objections having been received from Amoco Production Company and American Quasar Petroleum Company, a hearing will be held on Thursday, December 30, 1982, at 10:00 a.m., in Room 320 of the State Capitol Building, Salt Lake City, Utah, in the above entitled matter, at which time all persons, firms and corporations interested may, if they so desire, appear and be heard.

DATED this 7th day of December, 1982.

STATE OF UTAH
BOARD OF OIL, GAS AND MINING
PAULA J. FRANK
Secretary of the Board

Division of Oil, Gas and Mining
4241 State Office Bldg.
Salt Lake City, Ut. 84114
Phone: (801)533-5771
A-61

Debra Miller

*Being first duly sworn, deposes and says that he is legal advertising clerk of THE SALT LAKE TRIBUNE, a daily newspaper printed in the English language with general circulation in Utah, and published in Salt Lake City, Salt Lake County in the State of Utah, and of the DESERET NEWS a daily (except Sunday) newspaper printed in the English language with general circulation in Utah, and published in Salt Lake City, Salt Lake County, in the State of Utah.*

*That the legal notice of which a copy is attached hereto*

Pub. notice of hearing Cause No. UIC-013

*was published in said newspapers on*

Dec. 16, 1982

Debra Miller
*Legal Advertising Clerk*

*Subscribed and sworn to before me this* 23rd *day of* December *A.D. 19* 82.

*Notary Public*

*My Commission Expires*

Oct. 1, 1986

# PROOF OF PUBLICATION

STATE OF UTAH, }
County of Summit, } ss.

I, Shirley B. Phelps

being first duly sworn, depose and say that I am the _____ bookkeeper of The Summit County Bee, a weekly newspaper of general circulation, published once each week at Coalville, Utah, that the notice attached hereto and which is a Notice of Hearing Cause No. UIC-013

was published in said newspaper for 1 ~~consecutive~~ issue~~s~~, the first publication having been made on the 17 day of December, 19 82, ~~and the last on the _____ day of _____, 19___,~~ that said notice was published in the regular and entire issue of every number of the paper during the period and times of publication, and the same was published in the newspaper proper and not in any supplement.

Shirley B. Phelps

Subscribed and sworn to before me this 17 day of December, 19 82.

Notary Public

My commission expires My Commission Expires Sept. 1, 1985, 19___.

NOTICE OF HEARING
CAUSE NO. UIC-013

BEFORE THE BOARD OF OIL, GAS AND MINING, DEPARTMENT OF NATURAL RESOURCES AND ENERGY in and for the STATE OF UTAH

IN THE MATTER OF THE APPLICATION OF DAVIS OIL COMPANY FOR APPROVAL TO INJECT GAS INTO A WELL LOCATED IN SECTION 26, TOWNSHIP 3 NORTH, RANGE 7 EAST, SUMMIT COUNTY, UTAH

THE STATE OF UTAH TO ALL PERSONS, OWNERS, PRODUCERS, OPERATORS, PURCHASERS AND TAKERS OF OIL AND GAS AND ALL OTHER INTERESTED PERSONS, PARTICULARLY IN SUMMIT COUNTY, UTAH:

NOTICE IS HEREBY GIVEN that Davis Oil Company, 410 17th Street, Suite 1400, Denver, Colorado 80202, is requesting that the Division authorize the approval to convert the well mentioned below to a gas injection well as follows:

Township 3 North, Range 7 East, Section 26, Logan Federal #1 Well

INJECTION ZONE: Nugget Sandstone 12,804' to 12,826'

MAXIMUM INJECTION PRESSURE: 6,000 psi

MAXIMUM INJECTION RATE: 5,000,000 SCFPD

Objections having been received from Amoco Production Company and American Quasar Petroleum Company, a hearing will be held on Thursday, December 30, 1982, at 10:00 a.m., in Room 320 of the State Capitol Building, Salt Lake City, Utah, in the above entitled matter, at which time all persons, firms and corporations interested may, if they so desire, appear and be heard.

DATED this 7th day of December, 1982.

STATE OF UTAH
BOARD OF OIL,
GAS AND MINING

PAULA J. FRANK
Secretary of the Board

Division of Oil, Gas and Mining, 4241 State Office Building, Salt Lake City, Utah 84114, Phone: (801) 533-5771

Published in the Summit Co. Bee Dec. 17, 1982.

# PROOF OF PUBLICATION

STATE OF UTAH, }
County of Summit, } ss.

I, Shirley B. Phelps

being first duly sworn, depose and say that I am the bookkeeper of The Summit County Bee, a weekly newspaper of general circulation, published once each week at Coalville, Utah, that the notice attached hereto and which is a Notice of Hearing Cause No. UIC-013

was published in said newspaper for 1 ~~consecutive~~ issue~~s~~, the first publication having been made on the 17 day of December, 1982~~, and the last on the day of, 19~~, that said notice was published in the regular and entire issue of every number of the paper during the period and times of publication, and the same was published in the newspaper proper and not in any supplement.

Shirley B. Phelps

Subscribed and sworn to before me this 17 day of December, 1982.

Notary Public

My commission expires My Commission Expires Sept. 1, 1985, 19

RECEIVED
DEC 31 1982
DIVISION OF
OIL, GAS & MINING

NOTICE OF HEARING
CAUSE NO. UIC-013

BEFORE THE BOARD OF OIL, GAS AND MINING, DEPARTMENT OF NATURAL RESOURCES AND ENERGY in and for the STATE OF UTAH

IN THE MATTER OF THE APPLICATION OF DAVIS OIL COMPANY FOR APPROVAL TO INJECT GAS INTO A WELL LOCATED IN SECTION 26, TOWNSHIP 3 NORTH, RANGE 7 EAST, SUMMIT COUNTY, UTAH

THE STATE OF UTAH TO ALL PERSONS, OWNERS, PRODUCERS, OPERATORS, PURCHASERS AND TAKERS OF OIL AND GAS AND ALL OTHER INTERESTED PERSONS, PARTICULARLY IN SUMMIT COUNTY, UTAH:

NOTICE IS HEREBY GIVEN that Davis Oil Company, 410 17th Street, Suite 1400, Denver, Colorado 80202, is requesting that the Division authorize the approval to convert the well mentioned below to a gas injection well as follows:

Township 3 North, Range 7 East, Section 26, Logan Federal #1 Well

INJECTION ZONE: Nugget Sandstone 12,804' to 12,826'

MAXIMUM INJECTION PRESSURE: 6,000 psi

MAXIMUM INJECTION RATE: 5,000,000 SCFPD

Objections having been received from Amoco Production Company and American Quasar Petroleum Company, a hearing will be held on Thursday, December 30, 1982, at 10:00 a.m., in Room 320 of the State Capitol Building, Salt Lake City, Utah, in the above entitled matter.

DATED this 7th day of December, 1982.

STATE OF UTAH
BOARD OF OIL,
GAS AND MINING

PAULA J. FRANK
Secretary of the Board

Division of Oil, Gas and Mining, 4241 State Office Building, Salt Lake City, Utah 84114, Phone: (801) 533-5771

Published in the Summit Co. Bee Dec. 17, 1982.

# PROOF OF PUBLICATION

STATE OF UTAH, }
County of Summit, } ss.

I, Susan Davis

being first duly sworn, depose and say that I am the bookkeeper of The Park Record, a weekly newspaper of general circulation, published once each week at Park City, Utah, that the notice attached hereto and which is a Notice of Hearing Cause No. UIC-013

was published in said newspaper for one consecutive issues, the first publication having been made on the 16 day of December, 1982, and the last on the 16 day of December, 1982, that said notice was published in the regular and entire issue of every number of the paper during the period and times of publication, and the same was published in the newspaper proper and not in any supplement.

Susan Davis

Subscribed and sworn to before me this 16 day of December, 1982.

Notary Public

My commission expires Commission Expires Sept. 1, 1985, 19____.

**Before the Board of Oil, Gas and Mining Department of Natural Resources and Energy in and for the State of Utah**

**Notice of Hearing**
**Cause No. UIC-013**

**In the matter of the application of Davis Oil Company for approval to inject gas into a well located in Section 26, Township 3 North, Range 7 East, Summit County, Utah.**

The state of Utah to all persons, owners, producers, operators, purchasers and takers of oil and gas and all other interested persons, particularly in Summit County, Utah:

**Notice is hereby given** that Davis Oil Company, 410 17th Street, Suite 1400, Denver, Colorado 80202, is requesting that the Division authorize the approval to convert the well mentioned below to a gas injection well as follows:

Township 3 North,
Range 7 East
Section 26,
Logan Federal #1 Well

**Injection Zone:** Nugget Sandstone 12,804' to 12,826'
**Maximum injection pressure:** 6,000 psi
**Maximum injection rate:** 5,000,000 SCFPD

Objections having been received from Amoco Production Company and American Quasar Petroleum Company, a hearing will be held on Thursday, December 30, 1982, at 10:00 a.m., in Room 320 of the State Capitol Building, Salt Lake City, Utah, in the above entitled matter, at which time all persons, firms and corporations interested may, if they so desire, appear and be heard.

**Dated** this 7th day of December, 1982.

**STATE OF UTAH**
**BOARD OF OIL, GAS AND MINING**

**PAULA J. FRANK**
**Secretary of the Board**

Published in the Park Record on December 16, 1982

# PROOF OF PUBLICATION

STATE OF UTAH, }
County of Summit, } ss.

I, Susan Davis

being first duly sworn, depose and say that I am the bookkeeper of The Park Record, a weekly newspaper of general circulation, published once each week at Park City, Utah, that the notice attached hereto and which is a

Cause No. UIC-012

was published in said newspaper for one consecutive issues, the first publication having been made on the 2 day of December, 1982, and the last on the 2 day of December, 1982, that said notice was published in the regular and entire issue of every number of the paper during the period and times of publication, and the same was published in the newspaper proper and not in any supplement.

Susan Davis

Subscribed and sworn to before me this 2 day of December, 1982.

Notary Public

My commission expires [illegible], 19____.

**Before the Division of Oil, Gas and Mining Room 4241 State Office Building Salt Lake City, Utah 84114**

**Cause No. UIC-012**

In the matter of the application of Davis Oil Company, for administrative approval to inject gas into a well located in section 26, Township 3 North, Range 7 East, Summit County, Utah.

The State of Utah to all persons, owners, producers, operators, purchasers and takers of oil and gas and all other interested persons, particularly in Summit County, Utah:

**Notice is hereby given** that Davis Oil Company, 410 17th street, Suite 1400, Denver, Colorado 80202, is requesting that the Division authorize the approval to convert the well mentioned below, to a gas injection well as follows:

Township 3 North,
Range 7 East
Sec. 26, Well

Published in the Park Record on December 2, 1982.

BEFORE THE BOARD OF OIL, GAS AND MINING
DEPARTMENT OF NATURAL RESOURCES AND ENERGY
in and for the STATE OF UTAH

---

| | | |
|---|---|---|
| IN THE MATTER OF THE APPLICATION OF DAVIS OIL COMPANY FOR APPROVAL TO INJECT GAS INTO A WELL LOCATED IN SECTION 26, TOWNSHIP 3 NORTH, RANGE 7 EAST, SUMMIT COUNTY, UTAH | ) | NOTICE OF HEARING<br><br>CAUSE NO. UIC-013 |

---

THE STATE OF UTAH TO ALL PERSONS, OWNERS, PRODUCERS, OPERATORS, PURCHASERS AND TAKERS OF OIL AND GAS AND ALL OTHER INTERESTED PERSONS, PARTICULARLY IN SUMMIT COUNTY, UTAH:

NOTICE IS HEREBY GIVEN that Davis Oil Company, 410 17th Street, Suite 1400, Denver, Colorado 80202, is requesting that the Division authorize the approval to convert the well mentioned below to a gas injection well as follows:

Township 3 North, Range 7 East

Section 26, Logan Federal #1 Well

INJECTION ZONE: Nugget Sandstone 12,804' to 12,826'

MAXIMUM INJECTION PRESSURE: 6,000 psi

MAXIMUM INJECTION RATE: 5,000,000 SCFPD

Objections having been received from Amoco Production Company and American Quasar Petroleum Company, a hearing will be held on Thursday, December 30, 1982, at 10:00 a.m., in Room 320 of the State Capitol Building, Salt Lake City, Utah, in the above entitled matter, at which time all persons, firms and corporations interested may, if they so desire, appear and be heard.

DATED this 7th day of December, 1982.

STATE OF UTAH
BOARD OF OIL, GAS AND MINING

Paula J. Frank

PAULA J. FRANK
Secretary of the Board

Division of Oil, Gas and Mining
4241 State Office Building
Salt Lake City, Utah 84114
Phone: (801) 533-5771

8

Form 9-331
(May 1963)

UNITED STATES
DEPARTMENT OF THE INTERIOR
GEOLOGICAL SURVEY

SUBMIT IN TRIPLICATE*
(Other instructions on reverse side)

MINERALS MANAGEMENT SERVICE
OIL & GAS OPERATIONS
RECEIVED
OCT 12 1982
SALT LAKE CITY, UTAH

Form approved.
Budget Bureau No. 42-R1424.

# SUNDRY NOTICES AND REPORTS ON WELLS

(Do not use this form for proposals to drill or to deepen or plug back to a different reservoir. Use "APPLICATION FOR PERMIT—" for such proposals.)

1. OIL WELL [X] GAS WELL [ ] OTHER

2. NAME OF OPERATOR
Davis Oil Company

3. ADDRESS OF OPERATOR
410 17th St. Suite 1400, Denver, CO 80202

4. LOCATION OF WELL (Report location clearly and in accordance with any State requirements.* See also space 17 below.)
At surface
SENE Sec. 26 T3N R7E

5. LEASE DESIGNATION AND SERIAL NO.
U ~~W~~-47812

6. IF INDIAN, ALLOTTEE OR TRIBE NAME
---

7. UNIT AGREEMENT NAME
---

8. FARM OR LEASE NAME
Logan Federal

9. WELL NO.
#1

10. FIELD AND POOL, OR WILDCAT
Wildcat

11. SEC., T., R., M., OR BLK. AND SURVEY OR AREA
Sec. 26 T3N R7E

14. PERMIT NO.
43-04330186

15. ELEVATIONS (Show whether DF, RT, GR, etc.)
7489' GL, 7514' KB

12. COUNTY OR PARISH
Summit

13. STATE
Utah

16. Check Appropriate Box To Indicate Nature of Notice, Report, or Other Data

NOTICE OF INTENTION TO:

| | | | |
|---|---|---|---|
| TEST WATER SHUT-OFF | | PULL OR ALTER CASING | |
| FRACTURE TREAT | | MULTIPLE COMPLETE | |
| SHOOT OR ACIDIZE | | ABANDON* | |
| REPAIR WELL | | CHANGE PLANS | X |
| (Other) Proposed Pressure Maintenance | | | X |

SUBSEQUENT REPORT OF:

| | | | |
|---|---|---|---|
| WATER SHUT-OFF | | REPAIRING WELL | |
| FRACTURE TREATMENT | | ALTERING CASING | |
| SHOOTING OR ACIDIZING | | ABANDONMENT* | |
| (Other) | | | |

(NOTE: Report results of multiple completion on Well Completion or Recompletion Report and Log form.)

17. DESCRIBE PROPOSED OR COMPLETED OPERATIONS (Clearly state all pertinent details, and give pertinent dates, including estimated date of starting any proposed work. If well is directionally drilled, give subsurface locations and measured and true vertical depths for all markers and zones pertinent to this work.) *

Davis Oil Company voluntarily submits the attached gas recycling pressure maintenance plan to be initiated for the subject well to prevent waste, protect the correlative rights of all owners and to obtain the greatest economic ultimate recovery of oil and gas from the Nugget Sandstone.

7" cc @ 13,488'; Perf. 12,804 - 12,926 (Sel.); Completed 8/5/82; Flwd. & Tstd. to 8/29/82 and SI; BHP 5015 psig 8/30/82 @ 12,726'; Dew Point 4,731 psig
Reservoir Temp - 220°
Propose: Press Maintenance into U. Nuggett Perfs 12,804 - 12,826'; with production from L. Nuggett Perfs 12,860 - 12,926' (Sel.); Pkr 12,845' 2 7/8" Tbg. to pkr

NO ADDITIONAL SURFACE DISTURBANCE FOR THIS ACTIVITY

18. I hereby certify that the foregoing is true and correct

SIGNED REB [signature] TITLE Rocky Mountain Division Mgr. DATE 10/7/82

(This space for Federal or State office use)

APPROVED BY [signature] TITLE DO&GS DATE 10/20/82

CONDITIONS OF APPROVAL, IF ANY

*See Attachment

EXHIBIT #10
CAUSE #203-1

*See Instructions on Reverse Side

Davis Oil Company
410 17th Street, Suite 1400
Denver, Colorado 80202

U-47812
Logan Federal #1
Sec. 26, T. 3N, R. 7E
Summit County, Utah

Conditions of Approval: (Telecon w/ Tom Bowman, Davis Oil on 10/20/82)

1. Initial SITP and BHP will be obtained with press bomb to 12,809' for L. Nuggett Perforations and reported to this office.

2. After each 30 days of production from L. Nuggett, with pressure maintenance in U. Nuggett and over a 90 day production-pressure maintenance period, the well will be SI for 72 hours and SITP and BHP with pressure bomb at 12,890' obtained. BHP monitoring frequency may be extended as a result of this 90 day test period.

3. Reports of the 90 day test period will be provided each 30 days of BHP monitoring and will include: a) BHP reading at 12,890', b) SIWHP or SITP, c) Natural gas and Liquids Produced volumes from L. Nuggett, d) Natural Gas Injected volume in the U. Nuggett.

**DAVIS OIL COMPANY**
410 — 17TH STREET, SUITE 1400
DENVER, COLORADO 80202-4472
TELEPHONE: 303-623-1000

NEW ORLEANS
HOUSTON
TULSA

MINERALS MANAGEMENT SERVICE
OIL & GAS OPERATIONS
RECEIVED

OCT 14 1982
SALT LAKE CITY, UTAH

October 13, 1982

Minerals Management Service
2000 Administration Bldg.
Attn: Ed Guynn
1700 S. 1740 W.
Salt Lake City, UT 84104

File: REB-642-WF
RE: Logan Federal #1
SENE Sec. 26 T3N R7E
Summit County, Utah

Dear Mr. Guynn:

Attached for your approval is a diagram of our proposed surface equipment to be installed on the subject well. This equipment is necessary to begin a pressure maintenance program in the Nugget Formation.

The attached surface diagram shows the dimensions of the existing drill pad. As shown on the diagram, all equipment will be placed on the existing drill pad. There will be no additional surface disturbance required to install the surface equipment.

This letter is being submitted to provide the necessary supplement to our Surface Use Plan as provided on our Application for Permit to Drill, in order that our Pressure Maintenance Program previously submitted to your office can be approved in its entirety.

If you have any further questions or comments regarding our Pressure Maintenance Program please contact Mr. Tom Bowman at the above number.

Sincerely,

DAVIS OIL COMPANY

Robert E. Blaylock
Rocky Mountain Division Manager

TEB/dd
encl.

cc: Bob Pruitt - Salt Lake City
Paul Messinger - Davis Oil/Denver
Robert McDonald - Davis Oil/Denver

## SUPPLEMENT TO SURFACE USE PLAN

Note: This proposed surface facility installation will require no additional surface disturbance. All proposed equipment will be contained on the existing 300' x 360' drill pad.

DIAGRAM
Logan Federal #1
SENE Sec. 26 T3N R7E
Summit County, Utah
Scale: 1" = 50'

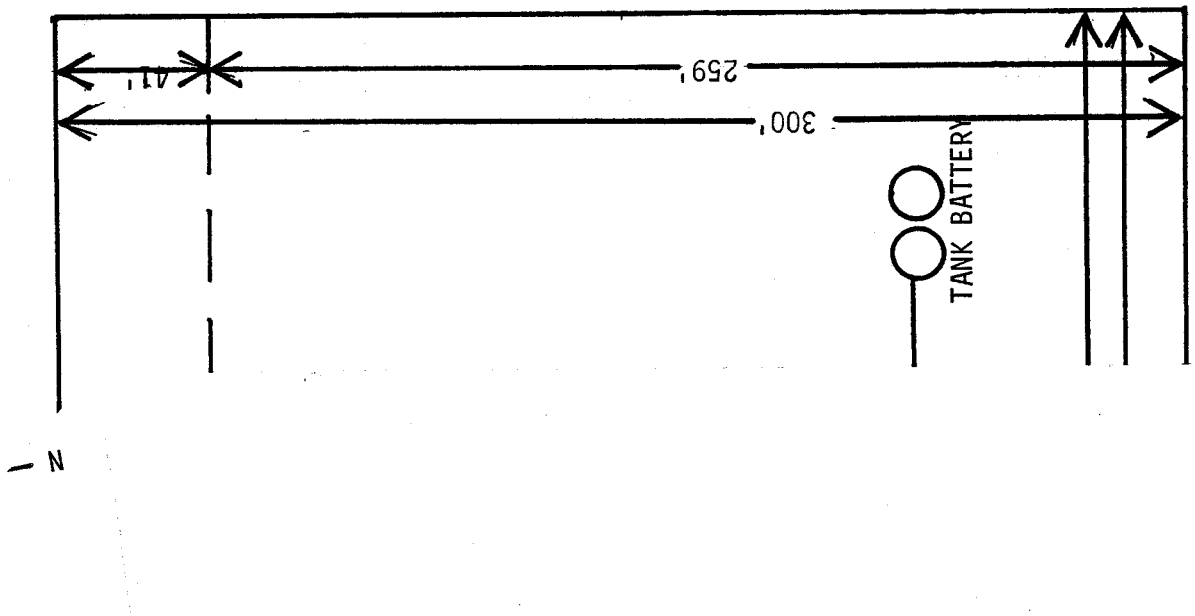

MINERALS MANAGEM
SERVICE
OIL & GAS OPERATIO
RECEIVED

OCT 12 1982

SALT LAKE CITY, UT

October 7, 1982

Logan Federal #1

Sec. 26 T3N R7E

Summit County, Utah

GAS RECYCLING PRESSURE MAINTENANCE PLAN

Davis Oil Company voluntarily proposes the following pressure maintenance outline to develop and operate the subject well to prevent waste, protect the correlative rights of all owners and to obtain the greatest economic ultimate recovery of oil and gas from the Nugget Sandstone.

Approximately 4 MMSCFPD gas and 350 BOPD oil will be produced from the lower Nugget interval, the stream will be processed through two-stage separation, the high pressure gas plus make-up will be compressed and injected down the tubing-casing annulus into the upper Nugget formation.

Proper pressure maintenance will yield a greater ultimate hydrocarbon recovery of 20-30%. Pressure maintenance will be accomplished by re-injecting between 4 MMSCFPD and 4.5 MMSCFPD into the upper Nugget interval. Estimated surface injection pressure is 5800 psi. The following is Davis Oil Company's proposal to initiate a pressure maintenance program.

TEN POINT NUGGET PRESSURE MAINTENANCE OUTLINE

1. Install a single production packer between the upper and lower Nugget zones.
2. Install a single string of production tubing.
3. Upgrade the 10" casing spool and tubing spool to 10,000 psi working pressure.
4. Install a Low Temperature Extraction (LTX), high pressure separator.
5. Install a low pressure separator.
6. Install production tanks.
7. Install a high pressure two-stage compressor.
8. Begin production slowly and cautiously through tubing.
9. Re-inject all produced gas down annulus into the upper Nugget while simultaneously producing the lower Nugget through tubing.
10. Monitor reservoir properties and overall mechanical operations to assure that all gas is being re-injected into the Nugget formation and that reservoir pressure is maintained above the dew point.

DISCUSSION OF RETROGRADE RESERVOIR

Utilizing wellstream fluids sampled and tested by an independent laboratory, (Exhibit 1) it appeared that the produced fluid from the subject well exhibited isothermal retrograde phenomena. The industry in general defines the formation of a liquid from a vapor at constant temperature as a result of decrease in pressure, "retrograde condensation". Davis Oil Company has classified the Nugget interval in the subject well as a Retrograde Condensate Reservoir and feels that retrograde behavior will be encountered and will control the flow

mechanism in the reservoir sand. Consequently, Davis Oil would expect some difference in the pressure - production behavior of the reservoir and some difference in the manner by which the reservoir should be produced to obtain the maximum economic recovery of oil and gas.

Pressure decline in a Retrograde Condensate reservoir results in formation of a liquid phase within the reservoir rock pores. Laboratory tests have shown that the retrograde liquid formed in the reservoir rock is immobile. The fundamental assumptions concerning the immobility of retrograde reservoir liquid is believed reasonable in view of the fact that most systems reviewed in the United States yield less than or equal to 10% retrograde by volume during pressure decline at reservoir temperature. The well fluids from the subject well exhibit similar behavior (Exhibit 1). Davis Oil believes that the effective permeability of reservoir rock to this liquid phase is zero in the saturation range of interest. Furthermore, it is felt that proper pressure maintenance to achieve an average reservoir pressure above the dew-point will eliminate permeability reduction in such a manner as will prevent waste, protect the correlative rights of all owners and obtain a greater ultimate recovery of hydrocarbons.

During the last 30 years, the operation of processing production from gas-condensate reservoirs for the heavier hydrocarbon components and returning the light components to the reservoir (re-cycling) has become increasing popular and has proven to be the most cost effective method of pressure maintenance. The purpose of recycling is to maintain the average reservoir pressure near or above the dew-point in order to

remove the heavier hydrocarbon components which otherwise would form immobile, retrograde liquids.

Gas reinjection is not a new idea in the Nugget Overthrust. A similar gas reinjection program to maintain reservoir pressure and minimize potential hydrocarbon loss was initiated in 1977 when Amoco brought their first wells on stream in the Ryckman Creek Field. At that time, produced gas was stripped of liquids and reinjected into the gas cap at a daily rate of 4000 MCFPD. Three of Amoco's wells were dually completed for injection and production simultaneously. Likewise, Chevron initiated a similar pressure maintenance program at Painter Reservoir in 1978, where there were eleven gas injection wells in the field, dually completed for both injection and production.

DISCUSSION OF TEN POINT OUTLINE

The preceeding discussion addressed the question "Why recycle gas?". The following discussion will address the How to? or more suitably, the mechanics involved to recycle gas in an efficiently prudent and safe manner with necessary precautions to protect against the loss or waste of gas.

1. Install a single production packer between existing sets of Nugget perforations. The current wellbore schematic (Exhibit 2) shows a wireline set retrievable packer set above the existing perforations. This test packer is not drillable in the event that it becomes stuck in place, and would become somewhat unsanitary if used for annular

injection operations. This packer would be snubbed out and replaced with a wireline set drillable packer. The proposed snubbing operation does not involve killing the well with water and hence damaging the formation, and is a very safe and effective method of working on a flowing well. The new packer will be set at 12,845', between the Upper and Lower Nugget perforations (Exhibit 3). The single packer installation will allow the greatest flexibility in the event of future workovers or re-completions.

2. Install a single string of production tubing. A string of 2 7/8", 6.5#, N-80 EUE 8rd tubing will be installed for production (Exhibit 3). This tubing is made from extra high strength steel and will not readily be affected by erosion of the injected gas. Using anticipated production and injection pressures and tensile loads, the tubing safety factors are as follows:

| | | |
|---|---|---|
| Tension | - | 1.40 |
| Burst | - | 2.64 |
| Collapse | - | 1.86 |

The single tubing string will allow the recycling of clean, non-corrosive gas down the annulus into the upper Nugget perforations.

3. Upgrade the 10" casing spool and tubing spool to 10,000 psi working pressure. The existing 13 5/8" x 10" casing spool and the tubing spool are rated for pressures of below 5000 psi (Exhibit 4). The

estimated injection pressure will be 5800 psi. These two pieces of wellhead equipment will be replaced and the wellhead will be rated to 10,000 psi, well above the estimated pressure range. To accomplish this, a double-studded pack off 10", 5000 psi x 11", 10,000 psi will be installed above the 13 5/8", 5,000 psi x 10", 5,000 psi casing spool. The tubing head will then be replaced with an 11", 10,000 psi x 7 1/16", 10,000 psi head (Exhibit 5).

4. Install a Low Temperature Extraction (LTX), high pressure separator. The use of an LTX gas separation system will be very advantagous to the operation and developemnt of the subject well. A special LTX unit was recommended and designed by an independent contractor (Exhibit 6) as the most efficient method of removing liquids from the fluid stream. The LTX method of separation is based on the principal of a rapid, sharp pressure drop across a choke. This pressure drop also causes a sharp instantaneous temperature drop which freezes all liquids in the fluid stream. The dry gas exits the top of the vessel and the frozen liquid hydrocarbons and water are heated, removed from below and sent to a low pressure separator. Reservoir pressure maintenance on the subject well will maintain suitable, stable wellhead pressures and make the LTX separator very efficient thereby allowing maximum liquid production from the well.

This method of liquid extraction lends itself to becoming the most efficient separation method to prevent waste and obtain greater economic ultimate recovery of retrograde liquids.

Davis Oil Company has the computer capability to calculate and optimize liquid recovery based on the amount of low pressure fuel gas needed for compression and heat. Initially the well will be beaned-up to 4 MMSCFPD and 350 BOPD based on separator pressures of 750 psi and 60 psi (Exhibit 7). Field testing will continue once the well is brought on production and stabilized in order to obtain maximum liquid recovery and clean, non-corrosive gas for re-injection.

5. Install a low pressure separator. A low pressure vessel will be set to reduce the flashing of gas going from 750 psi to the stock tanks. The operation pressure of the unit is estimated at 60 psi and like the LTX unit it will be optimized for liquid recovery using a computer once production stabilizes. The gas off this vessel will be used to fuel the compressor, the heaters and other surface equipment.

6. Install production tanks. Several permanent production tanks will be set to allow for adequate storage of oil in the event of inclement weather or a labor strike. All tanks and surface facilities will be installed as per API and following all state and federal regulations.

7. Install the compressor. A two stage 1000 hp compressor will be installed capable of compressing dry gas from 500 psi to 6000 psi. The compressor will be designed to handle initial production rates

as low as 1 MMSCFPD for start-up and have a high end capacity of 5 MMSCFPD.

8. Begin Production. Once the downhole and surface equipment is installed and tested the well will be opened utilizing appropriate methods to eliminate possible hazards at approximately 1 MMSCFPD and 100 BOPD. The production will slowly be increased to upward to 4 MMSCFPD and 350 BOPD while continually optimizing surface equipment and while monitoring production performance.

9. Re-inject gas down 2 7/8" x 7" tubing-casing annulus while simultaneously producing through tubing. The compressor will be fired-up and gas recycling will begin using the LTX separator gas.

The integrity of the tubing has been discussed in another section. The 7" production casing will be exposed to gas injection pressure as the gas is recycled down the annulus (Exhibit 3). The 7", 35#, and 38#, P-110 production casing was inspected, well cemented and will not permit any contamination to other zones. It is safe and adequate to prevent gas leakage and will not cause damage to any other oil, gas or fresh water resources. The estimated injection pressure is 5800 psi. The published pressure rating for this casing is 12,700 psi and was actually tested to 5000 psi using water during the initial completion. Prior to pulling the existing packer, the casing will be tested to 7000 psi using Nitrogen gas. This test will confirm the burst integrity of the casing while the

gas is being recycled. The safety factor using published ratings and anticipated pressure is 2.19 for burst. Although corrosion and/or erosion is possible, it is unlikely. A review of the gas analysis shows a very low percentage of Carbon Dioxide and Nitrogen with no Hydrogen Sulfide (Exhibit 1). Also the LTX separator will produce clean, dry gas free of water. The low percentages of these acid gases and water means that the corrosion on tubulars will be minimal. However, corrosion coupons will be installed and corrosion inhibitors will be injected to combat corrosion if it is evident.

The design integrity of the 7" casing will be more than adequate to prevent: 1. The escape of oil or gas from one stratum to another; 2. The intrusion of water into oil or gas strata.; 3. The pollution of fresh water supplies by oil, gas, salt water or brackish water; 4. The contamination of any useful natural resources by injected fluids; and 5. Blowouts, cavings, seepage, explosions or fires.

10. Monitor reservoir properties and overall mechanical operation. Production and Reservoir performance will be monitored closely to ensure that a diligent effort is being made to keep the average reservoir pressure above the dew point and to eliminate any hazard waste or leakage during the production of the subject well. All production and injection reports will be filed with the appropriate authorities according to state and federal regulations. Periodic bottomhole pressure surveys will be conducted to assure that reservoir pressure is maintained above the dew point pressure.

Also, periodic static temperature surveys will confirm that all gas is being injected into the Nugget Sandstone.

Davis Oil Company proposes to continue with this procedure until such time as; 1. it becomes uneconomic to operate; 2. all recoverable condensate liquids have been produced or; 3. the acreage is unitized and a plan is presented and approved by the appropriate state and federal authorities.

MINERALS MANAGEMENT
SERVICE
OIL & GAS OPERATIONS
RECEIVED

OCT 12 1982

SALT LAKE CITY, UTAH

# Reservoir Fluid Study

DAVIS OIL COMPANY
Logan Federal No. 1 Well
Pineview Field
Summit County, Utah

RFL 820563

7501 STEMMONS FREEW' ' OX 47547, DALLAS, TEXAS 75247 · 214/631-8270

October 5, 1982

CORE LABORATORIES, INC.

P. L. Moses
Manager
Reservoir Fluid Analysis

Davis Oil Company
410-17th Street, Suite 1400
Denver, CO 80202

Attention: Mr. Steve Smith

Subject: Reservoir Fluid Study
Logan Federal No. 1 Well
Pineview Field
Summit County, Utah
RFL 820563

Gentlemen:

Samples of separator gas and condensate were collected from the subject well by a representative of Core Laboratories, Inc. during each rate of a five rate production test occurring on August 17 through 19, 1982. All of the gas and liquid samples were brought to our Dallas laboratory for use in a reservoir fluid study. Presented to you in the following report are the results of this study.

The hydrocarbon analysis of each of the five separator gas samples was conducted by routine gas chromatography. Each separator liquid sample was then subjected to hydrocarbon analysis by low temperature fractional distillation. The average separator gas production rate for each of the five tests was then corrected for pressure base, gas gravity factor and supercompressibility factor. The shrinkage of each of the five separator liquid samples was then measured in the laboratory. All of the aforementioned data was then used to calculate the well stream material produced during each of the five flow rates. The various production data and compositional data are grouped according to flow rate on pages one through ten.

Based upon the production data provided by Davis Oil Company, the rate No. 5 production test was the longest of the five tests and yielded production figures that indicated better stabilization than any of the four previous tests. After correcting the rate No. 5 production figures for the factors shown on page nine, the producing gas/liquid ratio was calculated to be 10417 cubic feet of separator gas at 15.025 psia and 60°F. per barrel of stock tank liquid at 60°F. In the laboratory, this ratio was found to be equivalent to 7404 standard cubic feet of separator gas per barrel of separator liquid at 585 psig and 75°F. The separator gas and liquid samples from the rate No. 5 test were

then physically recombined in this gas/liquid ratio and the resulting fluid was used for the remainder of the testing. The hydrocarbon composition of the well stream material produced during the rate No. 5 test was calculated on the basis of the aforementioned gas/liquid ratio and is presented on page ten, along with the measured hydrocarbon compositions of the rate No. 5 separator products.

A small portion of the recombined sample was initially subjected to constant composition expansion at the reported reservoir temperature of 220°F. During this expansion, a retrograde dew point was observed at 4731 psig. Presented on page eleven are the results of the pressure-volume measurements performed at the reservoir temperature.

The fluid was then subjected to constant volume depletion at the reservoir temperature, for the purpose of defining the retrograde condensation as a function of the reservoir pressure. The maximum observed volume of retrograde condensate was 10.0 percent of the hydrocarbon pore space. A tabulation of the retrograde liquid measurements performed during constant volume depletion may be found on page fifteen.

All of the aforementioned data were transmitted to you in the preliminary report issued from our Dallas offices on September 17, 1982. During the interim, the reservoir fluid was subjected to a constant volume depletion to predict reservoir performance during pressure depletion. A large quantity of reservoir fluid was charged to a high pressure visual cell and the sample volume at 4731 psig and 220°F. was determined. The fluid was then subjected to a series of expansions and constant pressure displacements, with each displacement terminating at the original saturated volume. The hydrocarbon composition, deviation factor and produced volume of each displaced well stream were determined by low temperature fractional distillation. At the conclusion of the constant volume depletion, the hydrocarbon composition of the 700 psig equilibrium liquid phase was also measured. The results of the constant volume depletion may be found on page twelve.

The smooth well stream compositions were then used with published equilibrium ratios to calculate the cumulative and instantaneous surface recoveries that may be expected during pressure depletion of the reservoir. The cumulative recovery calculations were based upon one MMSCF of original fluid and they are presented on page thirteen. A summary of the instantaneous surface recovery calculations are given on page fourteen.

It has been a pleasure to perform this reservoir fluid study for Davis Oil Company. Should you have any questions regarding these data or if we may be of further assistance in any way, please do not hesitate to call upon us.

Very truly yours,

CORE LABORATORIES, INC.

James R. Fortner

James R. Fortner
Area Manager
Reservoir Fluid Analysis

JRF:lj
6 cc: Addressee

1 cc: Davis Oil Company
410-17th Street, Suite 1400
Denver, CO 80202
Attn: Mr. Tom Bowman

CORE LABORATORIES, INC.
*Reservoir Fluid Analysis*



File RFL 820563

Company Davis Oil Company — Date Sampled August 17, 1982

Well Logan Federal No. 1 — County Summit

Field Pineview — State Utah

## FORMATION CHARACTERISTICS

| | | |
|---|---|---|
| Formation Name | | |
| Date First Well Completed | | |
| Original Reservoir Pressure | PSIG @ | Ft. |
| Original Produced Gas/Liquid Ratio | | SCF/Bbl |
| Production Rate | | Bbls/Day |
| Separator Pressure and Temperature | PSIG | °F. |
| Liquid Gravity at 60°F. | | °API |
| Datum | | Ft. Subsea |

## WELL CHARACTERISTICS

| | | |
|---|---|---|
| Elevation | | Ft. |
| Total Depth | | Ft. |
| Producing Interval | 12804-12826 | Ft. |
| Tubing Size and Depth | In. to | Ft. |
| Open Flow Potential | | MMSCF/Day |
| Last Reservoir Pressure | 5012 PSIG @ | Ft. |
| Date | August 30, 1982 | |
| Reservoir Temperature | 220 °F. @ | Ft. |
| Status of Well | | |
| Pressure Gauge | | |

## SAMPLING CONDITIONS

| | | |
|---|---|---|
| Flowing Tubing Pressure (11/64" Choke) | 2763 | PSIG |
| Flowing Bottom Hole Pressure | | PSIG |
| Primary Separator Pressure | 600 | PSIG |
| Primary Separator Temperature | 74 | °F. |
| Secondary Separator Pressure | | PSIG |
| Secondary Separator Temperature | | °F. |
| Field Stock Tank Liquid Gravity | | °API @ 60°F. |
| Primary Separator Gas Production Rate | 1603.6 | MSCF/Day |
| Pressure Base | 15.025 PSIA | |
| Temperature Base | 60 °F. | |
| Compressibility Factor ($F_{pv}$) | 1.060 | |
| Gas Gravity (Laboratory) | 0.696 | |
| Gas Gravity Factor ($F_g$) | 1.1987 | |
| Stock Tank Liquid Production Rate @ 60°F. | 167.97 | Bbls/Day |
| Primary Separator Gas/Stock Tank Liquid Ratio | 9547 | SCF/Bbl |
| or | 104.75 | Bbls/MMSCF |
| Sampled by | CB | |

REMARKS: Rate No. 1 Test

These analyses, opinions or interpretations are based on observations and material supplied by the client to whom, and for whose exclusive and confidential use, this report is made. The interpretations or opinions expressed represent the best judgement of Core Laboratories, Inc. (all errors and omissions excepted); but Core Laboratories, Inc. and its officers and employees, assume no responsibility and make no warranty or representations as to the productivity, proper operation, or profitableness of any oil, gas or other mineral well or in connection with which such report is used relied upon.

CORE LABORATORIES, INC.
*Reservoir Fluid Analysis*



File RFL 820563

Well Logan Federal No. 1

## HYDROCARBON ANALYSES OF SEPARATOR PRODUCTS AND CALCULATED WELL STREAM

| Component | Separator Liquid, Mol Percent | Separator Gas Mol Percent | Separator Gas GPM | Well Stream Mol Percent | Well Stream GPM |
|---|---|---|---|---|---|
| Hydrogen Sulfide | 0.00 | 0.00 | | 0.00 | |
| Carbon Dioxide | 0.33 | 0.86 | | 0.79 | |
| Nitrogen | 0.14 | 2.50 | | 2.20 | |
| Methane | 14.61 | 79.64 | | 71.33 | |
| Ethane | 9.48 | 11.01 | 3.002 | 10.81 | 2.948 |
| Propane | 11.19 | 4.09 | 1.148 | 5.00 | 1.403 |
| iso-Butane | 3.65 | 0.67 | 0.223 | 1.05 | 0.350 |
| n-Butane | 5.46 | 0.77 | 0.247 | 1.37 | 0.440 |
| iso-Pentane | 3.94 | 0.19 | 0.071 | 0.67 | 0.250 |
| n-Pentane | 3.82 | 0.14 | 0.052 | 0.61 | 0.225 |
| Hexanes | 5.83 | 0.10 | 0.042 | 0.83 | 0.345 |
| Heptanes plus | 41.55 | 0.03 | 0.014 | 5.34 | 3.167 |
| | 100.00 | 100.00 | 4.799 | 100.00 | 9.128 |

| Properties of Heptanes plus | | | |
|---|---|---|---|
| API gravity @ 60°F. | 45.2 | | |
| Density, Gm/Cc @ 60°F. | 0.7999 | | 0.800 |
| Molecular weight | 147 | 103 | 147 |

Calculated separator gas gravity (air=1.000) = 0.696
Calculated gross heating value for separator gas = 1195 BTU per cubic foot of dry gas @ 15.025 psia and 60°F.

Primary separator gas collected @ 600 psig and 74°F.
Primary separator liquid collected @ 600 psig and 74°F.

Primary separator gas/separator liquid ratio = 6918 SCF/Bbl @ 74°F.
Primary separator liquid/stock tank liquid ratio = 1.380 Bbls @ 74°F./Bbl
Primary separator gas/well stream ratio = 871.99 MSCF/MMSCF
Stock tank liquid/well stream ratio = 91.34 Bbls/MMSCF

Rate No. 1 Test

These analyses, opinions or interpretations are based on observations and material supplied by the client to whom, and for whose exclusive and confidential use, this report is made. The interpretations or opinions expressed represent the best judgement of Core Laboratories, Inc. (all errors and omissions excepted); but Core Laboratories, Inc. and its officers and employees, assume no responsibility and make no warranty or representations as to the productivity, proper operation, or profitableness of any oil, gas or other mineral well or in connection with which such report is used relied upon.

CORE LABORATORIES, INC.
*Reservoir Fluid Analysis*



File RFL 820563

Company Davis Oil Company | Date Sampled August 18, 1982

Well Logan Federal No. 1 | County Summit

Field Pineview | State Utah

## FORMATION CHARACTERISTICS

| | | |
|---|---|---|
| Formation Name | | |
| Date First Well Completed | | |
| Original Reservoir Pressure | PSIG @ | Ft. |
| Original Produced Gas/Liquid Ratio | | SCF/Bbl |
| Production Rate | | Bbls/Day |
| Separator Pressure and Temperature | PSIG | °F. |
| Liquid Gravity at 60°F. | | °API |
| Datum | | Ft. Subsea |

## WELL CHARACTERISTICS

| | | |
|---|---|---|
| Elevation | | Ft. |
| Total Depth | | Ft. |
| Producing Interval | 12804-12826 | Ft. |
| Tubing Size and Depth | In. to | Ft. |
| Open Flow Potential | | MMSCF/Day |
| Last Reservoir Pressure | 5012 PSIG @ | Ft. |
| Date | August 30, 1982 | |
| Reservoir Temperature | 220 °F. @ | Ft. |
| Status of Well | | |
| Pressure Gauge | | |

## SAMPLING CONDITIONS

| | | |
|---|---|---|
| Flowing Tubing Pressure (13/64" Choke) | 2590 | PSIG |
| Flowing Bottom Hole Pressure | | PSIG |
| Primary Separator Pressure | 610 | PSIG |
| Primary Separator Temperature | 74 | °F. |
| Secondary Separator Pressure | | PSIG |
| Secondary Separator Temperature | | °F. |
| Field Stock Tank Liquid Gravity | | °API @ 60°F. |
| Primary Separator Gas Production Rate | 2324.1 | MSCF/Day |
| Pressure Base | 15.025 PSIA | |
| Temperature Base | 60 °F. | |
| Compressibility Factor ($F_{pv}$) | 1.062 | |
| Gas Gravity (Laboratory) | 0.698 | |
| Gas Gravity Factor ($F_g$) | 1.1969 | |
| Stock Tank Liquid Production Rate @ 60°F. | 259.37 | Bbls/Day |
| Primary Separator Gas/Stock Tank Liquid Ratio | 8961 | SCF/Bbl |
| or | 111.60 | Bbls/MMSCF |
| Sampled by | CB | |

REMARKS: Rate No. 2 Test

These analyses, opinions or interpretations are based on observations and material supplied by the client to whom, and for whose exclusive and confidential use, this report is made. The interpretations or opinions expressed represent the best judgement of Core Laboratories, Inc. (all errors and omissions excepted); but Core Laboratories, Inc. and its officers and employees, assume no responsibility and make no warranty or representations as to the productivity, proper operation, or profitableness of any oil, gas or other mineral well or in connection with which such report is used relied upon.

File RFL 820563

Well Logan Federal No. 1

## HYDROCARBON ANALYSES OF SEPARATOR PRODUCTS AND CALCULATED WELL STREAM

| Component | Separator Liquid, Mol Percent | Separator Gas Mol Percent | Separator Gas GPM | Well Stream Mol Percent | Well Stream GPM |
|---|---|---|---|---|---|
| Hydrogen Sulfide | 0.00 | 0.00 | | 0.00 | |
| Carbon Dioxide | 0.38 | 0.86 | | 0.79 | |
| Nitrogen | 0.13 | 2.49 | | 2.16 | |
| Methane | 15.52 | 79.52 | | 70.54 | |
| Ethane | 10.20 | 11.04 | 3.011 | 10.92 | 2.978 |
| Propane | 11.00 | 4.13 | 1.159 | 5.09 | 1.428 |
| iso-Butane | 3.95 | 0.69 | 0.230 | 1.15 | 0.384 |
| n-Butane | 6.47 | 0.77 | 0.247 | 1.57 | 0.505 |
| iso-Pentane | 3.39 | 0.20 | 0.075 | 0.65 | 0.243 |
| n-Pentane | 3.27 | 0.15 | 0.055 | 0.59 | 0.218 |
| Hexanes | 6.04 | 0.08 | 0.033 | 0.92 | 0.383 |
| Heptanes plus | 39.65 | 0.07 | 0.032 | 5.62 | 3.351 |
| | 100.00 | 100.00 | 4.842 | 100.00 | 9.490 |

| Properties of Heptanes plus | | | |
|---|---|---|---|
| API gravity @ 60°F. | 45.0 | | |
| Density, Gm/Cc @ 60°F. | 0.8011 | | 0.801 |
| Molecular weight | 148 | 103 | 148 |

Calculated separator gas gravity (air=1.000) = 0.698
Calculated gross heating value for separator gas = 1198 BTU per cubic foot of dry gas @ 15.025 psia and 60°F.

Primary separator gas collected @ 610 psig and 74°F.
Primary separator liquid collected @ 610 psig and 74°F.

Primary separator gas/separator liquid ratio = 6315 SCF/Bbl @ 74°F.
Primary separator liquid/stock tank liquid ratio = 1.419 Bbls @ 74°F./Bbl
Primary separator gas/well stream ratio = 859.83 MSCF/MMSCF
Stock tank liquid/well stream ratio = 95.96 Bbls/MMSCF

Rate No. 2 Test

These analyses, opinions or interpretations are based on observations and material supplied by the client to whom, and for whose exclusive and confidential use, this report is made. The interpretations or opinions expressed represent the best judgement of Core Laboratories, Inc. (all errors and omissions excepted); but Core Laboratories, Inc. and its officers and employees, assume no responsibility and make no warranty or representations as to the productivity, proper operation, or profitableness of any oil, gas or other mineral well or in connection with which such report is used relied upon.

CORE LABORATORIES, INC.
*Reservoir Fluid Analysis*



File RFL 820563

| | | | |
|---|---|---|---|
| Company | Davis Oil Company | Date Sampled | August 18, 1982 |
| Well | Logan Federal No. 1 | County | Summit |
| Field | Pineview | State | Utah |

## FORMATION CHARACTERISTICS

| | | |
|---|---|---|
| Formation Name | | |
| Date First Well Completed | | |
| Original Reservoir Pressure | PSIG @ | Ft. |
| Original Produced Gas/Liquid Ratio | | SCF/Bbl |
| Production Rate | | Bbls/Day |
| Separator Pressure and Temperature | PSIG | °F. |
| Liquid Gravity at 60°F. | | °API |
| Datum | | Ft. Subsea |

## WELL CHARACTERISTICS

| | | |
|---|---|---|
| Elevation | | Ft. |
| Total Depth | | Ft. |
| Producing Interval | 12804-12826 | Ft. |
| Tubing Size and Depth | In. to | Ft. |
| Open Flow Potential | | MMSCF/Day |
| Last Reservoir Pressure | 5012 PSIG @ | Ft. |
| Date | August 30, 1982 | |
| Reservoir Temperature | 220 °F. @ | Ft. |
| Status of Well | | |
| Pressure Gauge | | |

## SAMPLING CONDITIONS

| | | |
|---|---|---|
| Flowing Tubing Pressure (15/64" Choke) | 2399 | PSIG |
| Flowing Bottom Hole Pressure | | PSIG |
| Primary Separator Pressure | 625 | PSIG |
| Primary Separator Temperature | 79 | °F. |
| Secondary Separator Pressure | | PSIG |
| Secondary Separator Temperature | | °F. |
| Field Stock Tank Liquid Gravity | | °API @ 60°F. |
| Primary Separator Gas Production Rate | 2949.6 | MSCF/Day |
| Pressure Base | 15.025 PSIA | |
| Temperature Base | 60 °F. | |
| Compressibility Factor ($F_{pv}$) | 1.060 | |
| Gas Gravity (Laboratory) | 0.699 | |
| Gas Gravity Factor ($F_g$) | 1.1961 | |
| Stock Tank Liquid Production Rate @ 60°F. | 253.22 | Bbls/Day |
| Primary Separator Gas/Stock Tank Liquid Ratio | 11648 | SCF/Bbl |
| or | 85.85 | Bbls/MMSCF |
| Sampled by | CB | |

REMARKS: Rate No. 3 Test

These analyses, opinions or interpretations are based on observations and material supplied by the client to whom, and for whose exclusive and confidential use, this report is made. The interpretations or opinions expressed represent the best judgement of Core Laboratories, Inc. (all errors and omissions excepted); but Core Laboratories, Inc. and its officers and employees, assume no responsibility and make no warranty or representations as to the productivity, proper operation, or profitableness of any oil, gas or other mineral well or in connection with which such report is used relied upon.

File RFL 820563

Well Logan Federal No. 1

## HYDROCARBON ANALYSES OF SEPARATOR PRODUCTS AND CALCULATED WELL STREAM

| Component | Separator Liquid, Mol Percent | Separator Gas Mol Percent | Separator Gas GPM | Well Stream Mol Percent | Well Stream GPM |
|---|---|---|---|---|---|
| Hydrogen Sulfide | 0.00 | 0.00 | | 0.00 | |
| Carbon Dioxide | 0.37 | 0.86 | | 0.80 | |
| Nitrogen | 0.14 | 2.49 | | 2.22 | |
| Methane | 15.37 | 79.51 | | 72.26 | |
| Ethane | 10.18 | 10.99 | 2.997 | 10.90 | 2.972 |
| Propane | 11.12 | 4.13 | 1.159 | 4.92 | 1.381 |
| iso-Butane | 4.00 | 0.69 | 0.230 | 1.06 | 0.354 |
| n-Butane | 6.66 | 0.80 | 0.257 | 1.46 | 0.469 |
| iso-Pentane | 3.61 | 0.19 | 0.071 | 0.58 | 0.216 |
| n-Pentane | 3.43 | 0.14 | 0.052 | 0.51 | 0.188 |
| Hexanes | 5.41 | 0.13 | 0.054 | 0.73 | 0.304 |
| Heptanes plus | 39.71 | 0.07 | 0.032 | 4.56 | 2.656 |
| | 100.00 | 100.00 | 4.852 | 100.00 | 8.540 |

| Properties of Heptanes plus | | | |
|---|---|---|---|
| API gravity @ 60°F. | 45.5 | | |
| Density, Gm/Cc @ 60°F. | 0.7985 | | 0.798 |
| Molecular weight | 145 | 103 | 144 |

Calculated separator gas gravity (air=1.000) = 0.699
Calculated gross heating value for separator gas = 1200 BTU per cubic foot of dry gas @ 15.025 psia and 60°F.

Primary separator gas collected @ 625 psig and 79°F.
Primary separator liquid collected @ 625 psig and 79°F.

Primary separator gas/separator liquid ratio = 8117 SCF/Bbl @ 79°F.
Primary separator liquid/stock tank liquid ratio = 1.435 Bbls @ 79°F./Bbl
Primary separator gas/well stream ratio = 886.84 MSCF/MMSCF
Stock tank liquid/well stream ratio = 76.13 Bbls/MMSCF

Rate No. 3 Test

These analyses, opinions or interpretations are based on observations and material supplied by the client to whom, and for whose exclusive and confidential use, this report is made. The interpretations or opinions expressed represent the best judgement of Core Laboratories, Inc. (all errors and omissions excepted); but Core Laboratories, Inc. and its officers and employees, assume no responsibility and make no warranty or representations as to the productivity, proper operation, or profitableness of any oil, gas or other mineral well or in connection with which such report is used relied upon.

CORE LABORATORIES, INC.
*Reservoir Fluid Analysis*



File RFL 820563

| | | | |
|---|---|---|---|
| Company | Davis Oil Company | Date Sampled | August 18, 1982 |
| Well | Logan Federal No. 1 | County | Summit |
| Field | Pineview | State | Utah |

## FORMATION CHARACTERISTICS

| | |
|---|---|
| Formation Name | |
| Date First Well Completed | |
| Original Reservoir Pressure | PSIG @ Ft. |
| Original Produced Gas/Liquid Ratio | SCF/Bbl |
| Production Rate | Bbls/Day |
| Separator Pressure and Temperature | PSIG °F. |
| Liquid Gravity at 60°F. | °API |
| Datum | Ft. Subsea |

## WELL CHARACTERISTICS

| | |
|---|---|
| Elevation | Ft. |
| Total Depth | Ft. |
| Producing Interval | 12804-12826 Ft. |
| Tubing Size and Depth | In. to Ft. |
| Open Flow Potential | MMSCF/Day |
| Last Reservoir Pressure | 5012 PSIG @ Ft. |
| Date | August 30, 1982 |
| Reservoir Temperature | 220 °F. @ Ft. |
| Status of Well | |
| Pressure Gauge | |

## SAMPLING CONDITIONS

| | | |
|---|---|---|
| Flowing Tubing Pressure (17/64" Choke) | 2220 | PSIG |
| Flowing Bottom Hole Pressure | | PSIG |
| Primary Separator Pressure | 620 | PSIG |
| Primary Separator Temperature | 79 | °F. |
| Secondary Separator Pressure | | PSIG |
| Secondary Separator Temperature | | °F. |
| Field Stock Tank Liquid Gravity | | °API @ 60°F. |
| Primary Separator Gas Production Rate | 3503.8 | MSCF/Day |
| Pressure Base | 15.025 PSIA | |
| Temperature Base | 60 °F. | |
| Compressibility Factor ($F_{pv}$) | 1.060 | |
| Gas Gravity (Laboratory) | 0.701 | |
| Gas Gravity Factor ($F_g$) | 1.1944 | |
| Stock Tank Liquid Production Rate @ 60°F. | 325.81 | Bbls/Day |
| Primary Separator Gas/Stock Tank Liquid Ratio | 10754 | SCF/Bbl |
| or | 92.99 | Bbls/MMSCF |
| Sampled by | CB | |

REMARKS: Rate No. 4 Test

These analyses, opinions or interpretations are based on observations and material supplied by the client to whom, and for whose exclusive and confidential use, this report is made. The interpretations or opinions expressed represent the best judgement of Core Laboratories, Inc. (all errors and omissions excepted); but Core Laboratories, Inc. and its officers and employees, assume no responsibility and make no warranty or representations as to the productivity, proper operation, or profitableness of any oil, gas or other mineral well or in connection with which such report is used relied upon.

CORE LABORATORIES, INC.
*Reservoir Fluid Analysis*



File RFL 820563

Well Logan Federal No. 1

## HYDROCARBON ANALYSES OF SEPARATOR PRODUCTS AND CALCULATED WELL STREAM

| Component | Separator Liquid, Mol Percent | Separator Gas Mol Percent | Separator Gas GPM | Well Stream Mol Percent | Well Stream GPM |
|---|---|---|---|---|---|
| Hydrogen Sulfide | 0.00 | 0.00 | | 0.00 | |
| Carbon Dioxide | 0.37 | 0.86 | | 0.80 | |
| Nitrogen | 0.11 | 2.49 | | 2.21 | |
| Methane | 14.75 | 79.37 | | 71.70 | |
| Ethane | 10.14 | 11.02 | 3.005 | 10.92 | 2.978 |
| Propane | 11.08 | 4.16 | 1.167 | 4.98 | 1.397 |
| iso-Butane | 4.31 | 0.70 | 0.233 | 1.13 | 0.377 |
| n-Butane | 6.13 | 0.81 | 0.260 | 1.44 | 0.463 |
| iso-Pentane | 3.46 | 0.20 | 0.075 | 0.59 | 0.220 |
| n-Pentane | 3.09 | 0.15 | 0.055 | 0.50 | 0.185 |
| Hexanes | 5.66 | 0.16 | 0.067 | 0.81 | 0.337 |
| Heptanes plus | 40.90 | 0.08 | 0.037 | 4.92 | 2.872 |
| | 100.00 | 100.00 | 4.899 | 100.00 | 8.829 |

| Properties of Heptanes plus | | | |
|---|---|---|---|
| API gravity @ 60°F. | 45.9 | | |
| Density, Gm/Cc @ 60°F. | 0.7967 | | 0.796 |
| Molecular weight | 145 | 103 | 144 |

Calculated separator gas gravity (air=1.000) = 0.701
Calculated gross heating value for separator gas = 1203 BTU per cubic foot of dry gas @ 15.025 psia and 60°F.

Primary separator gas collected @ 620 psig and 79°F.
Primary separator liquid collected @ 620 psig and 79°F.

Primary separator gas/separator liquid ratio = 7616 SCF/Bbl @ 79°F.
Primary separator liquid/stock tank liquid ratio = 1.412 Bbls @ 79°F./Bbl
Primary separator gas/well stream ratio = 881.51 MSCF/MMSCF
Stock tank liquid/well stream ratio = 81.97 Bbls/MMSCF

Rate No. 4 Test

These analyses, opinions or interpretations are based on observations and material supplied by the client to whom, and for whose exclusive and confidential use, this report is made. The interpretations or opinions expressed represent the best judgement of Core Laboratories, Inc. (all errors and omissions excepted); but Core Laboratories, Inc. and its officers and employees, assume no responsibility and make no warranty or representations as to the productivity, proper operation, or profitableness of any oil, gas or other mineral well or in connection with which such report is used relied upon.

CORE LABORATORIES, INC.
*Reservoir Fluid Analysis*



File RFL 820563

Company Davis Oil Company — Date Sampled August 19, 1982

Well Logan Federal No. 1 — County Summit

Field Pineview — State Utah

## FORMATION CHARACTERISTICS

| | | |
|---|---|---|
| Formation Name | | |
| Date First Well Completed | | |
| Original Reservoir Pressure | PSIG @ | Ft. |
| Original Produced Gas/Liquid Ratio | | SCF/Bbl |
| Production Rate | | Bbls/Day |
| Separator Pressure and Temperature | PSIG | °F. |
| Liquid Gravity at 60°F. | | °API |
| Datum | | Ft. Subsea |

## WELL CHARACTERISTICS

| | | |
|---|---|---|
| Elevation | | Ft. |
| Total Depth | | Ft. |
| Producing Interval | 12804-12826 | Ft. |
| Tubing Size and Depth | In. to | Ft. |
| Open Flow Potential | | MMSCF/Day |
| Last Reservoir Pressure | 5012 PSIG @ | Ft. |
| Date | August 30, 1982 | |
| Reservoir Temperature | 220 °F. @ | Ft. |
| Status of Well | | |
| Pressure Gauge | | |

## SAMPLING CONDITIONS

| | | |
|---|---|---|
| Flowing Tubing Pressure (23/64" Choke) | 1781 | PSIG |
| Flowing Bottom Hole Pressure | | PSIG |
| Primary Separator Pressure | 585 | PSIG |
| Primary Separator Temperature | 75 | °F. |
| Secondary Separator Pressure | | PSIG |
| Secondary Separator Temperature | | °F. |
| Field Stock Tank Liquid Gravity | | °API @ 60°F. |
| Primary Separator Gas Production Rate | 4785.6 | MSCF/Day |
| Pressure Base | 15.025 | PSIA |
| Temperature Base | 60 | °F. |
| Compressibility Factor ($F_{pv}$) | 1.059 | |
| Gas Gravity (Laboratory) | 0.699 | |
| Gas Gravity Factor ($F_g$) | 1.1961 | |
| Stock Tank Liquid Production Rate @ 60°F. | 459.41 | Bbls/Day |
| Primary Separator Gas/Stock Tank Liquid Ratio | 10417 | SCF/Bbl |
| or | 96.00 | Bbls/MMSCF |
| Sampled by | CB | |

REMARKS: Rate No. 5 Test

These analyses, opinions or interpretations are based on observations and material supplied by the client to whom, and for whose exclusive and confidential use, this report is made. The interpretations or opinions expressed represent the best judgement of Core Laboratories, Inc. (all errors and omissions excepted); but Core Laboratories, Inc. and its officers and employees, assume no responsibility and make no warranty or representations as to the productivity, proper operation, or profitableness of any oil, gas or other mineral well or in connection with which such report is used relied upon.

File RFL 820563

Well Logan Federal No. 1

## HYDROCARBON ANALYSES OF SEPARATOR PRODUCTS AND CALCULATED WELL STREAM

| Component | Separator Liquid, Mol Percent | Separator Gas Mol Percent | Separator Gas GPM | Well Stream Mol Percent | Well Stream GPM |
|---|---|---|---|---|---|
| Hydrogen Sulfide | 0.00 | 0.00 | | 0.00 | |
| Carbon Dioxide | 0.37 | 0.86 | | 0.80 | |
| Nitrogen | 0.11 | 2.48 | | 2.19 | |
| Methane | 14.66 | 79.45 | | 71.49 | |
| Ethane | 10.06 | 11.05 | 3.013 | 10.93 | 2.981 |
| Propane | 11.00 | 4.17 | 1.170 | 5.01 | 1.406 |
| iso-Butane | 3.95 | 0.70 | 0.233 | 1.10 | 0.367 |
| n-Butane | 6.26 | 0.79 | 0.254 | 1.46 | 0.469 |
| iso-Pentane | 3.58 | 0.20 | 0.075 | 0.62 | 0.231 |
| n-Pentane | 3.33 | 0.15 | 0.055 | 0.54 | 0.199 |
| Hexanes | 5.23 | 0.09 | 0.037 | 0.72 | 0.300 |
| Heptanes plus | 41.45 | 0.06 | 0.028 | 5.14 | 3.014 |
| | 100.00 | 100.00 | 4.865 | 100.00 | 8.967 |

| Properties of Heptanes plus | | | |
|---|---|---|---|
| API gravity @ 60°F. | 45.7 | | |
| Density, Gm/Cc @ 60°F. | 0.7977 | | 0.798 |
| Molecular weight | 145 | 103 | 145 |

Calculated separator gas gravity (air=1.000) = 0.699
Calculated gross heating value for separator gas = 1199 BTU per cubic foot of dry gas @ 15.025 psia and 60°F.

Primary separator gas collected @ 585 psig and 75°F.
Primary separator liquid collected @ 585 psig and 75°F.

Primary separator gas/separator liquid ratio = 7404 SCF/Bbl @ 75°F.
Primary separator liquid/stock tank liquid ratio = 1.407 Bbls @ 75°F./Bbl
Primary separator gas/well stream ratio = 877.16 MSCF/MMSCF
Stock tank liquid/well stream ratio = 84.21 Bbls/MMSCF

Rate No. 5 Test

These analyses, opinions or interpretations are based on observations and material supplied by the client to whom, and for whose exclusive and confidential use, this report is made. The interpretations or opinions expressed represent the best judgement of Core Laboratories, Inc. (all errors and omissions excepted); but Core Laboratories, Inc. and its officers and employees, assume no responsibility and make no warranty or representations as to the productivity, proper operation, or profitableness of any oil, gas or other mineral well or in connection with which such report is used relied upon.

File RFL 820563

Well Logan Federal No. 1

## PRESSURE-VOLUME RELATIONS OF RESERVOIR FLUID AT 220°F.
(Constant Composition Expansion)

| Pressure, PSIG | | Relative Volume | Deviation Factor Z |
|---|---|---|---|
| 6500 | | 0.8732 | 1.161 |
| 6000 | | 0.8998 | 1.105 |
| 5600 | | 0.9256 | 1.061 |
| 5300 | | 0.9474 | 1.028 |
| 5000 | | 0.9733 | 0.996 |
| 4800 | | 0.9926 | 0.976 |
| 4731 | Dew Point Pressure | 1.0000 | 0.969* |
| 4700 | | 1.0036 | |
| 4600 | | 1.0157 | |
| 4450 | | 1.0345 | |
| 4250 | | 1.0634 | |
| 4000 | | 1.1043 | |
| 3700 | | 1.1653 | |
| 3400 | | 1.2405 | |
| 3100 | | 1.3373 | |
| 2800 | | 1.4580 | |
| 2500 | | 1.6188 | |
| 2200 | | 1.8379 | |
| 1900 | | 2.1346 | |
| 1600 | | 2.5581 | |
| 1274 | | 3.2552 | |
| 1017 | | 4.1381 | |
| 849 | | 5.0101 | |

*Gas Expansion Factor = 1.400 MSCF/Bbl.

Rate No. 5 Test

These analyses, opinions or interpretations are based on observations and material supplied by the client to whom, and for whose exclusive and confidential use, this report is made. The interpretations or opinions expressed represent the best judgement of Core Laboratories, Inc. (all errors and omissions excepted); but Core Laboratories, Inc. and its officers and employees, assume no responsibility and make no warranty or representations as to the productivity, proper operation, or profitableness of any oil, gas or other mineral well or in connection with which such report is used relied upon.

File RFL 820563

Well Logan Federal No. 1

## DEPLETION STUDY AT 220°F.

### Hydrocarbon Analyses of Produced Well Stream - Mol Percent

| Component | Reservoir Pressure - PSIG | | | | | | | |
|---|---|---|---|---|---|---|---|---|
| | 4731 | 4100 | 3400 | 2700 | 2000 | 1300 | 700 | 700* |
| Carbon Dioxide | 0.80 | 0.81 | 0.82 | 0.82 | 0.83 | 0.83 | 0.84 | 0.24 |
| Nitrogen | 2.19 | 2.26 | 2.31 | 2.33 | 2.35 | 2.33 | 2.23 | 0.14 |
| Methane | 71.49 | 72.44 | 73.63 | 74.72 | 75.42 | 75.42 | 74.32 | 12.45 |
| Ethane | 10.93 | 10.92 | 10.93 | 10.97 | 11.04 | 11.22 | 11.56 | 5.83 |
| Propane | 5.01 | 4.96 | 4.90 | 4.83 | 4.81 | 4.90 | 5.26 | 5.48 |
| iso-Butane | 1.10 | 1.07 | 1.04 | 1.01 | 1.00 | 1.02 | 1.14 | 1.93 |
| n-Butane | 1.46 | 1.41 | 1.37 | 1.34 | 1.31 | 1.33 | 1.47 | 3.00 |
| iso-Pentane | 0.62 | 0.58 | 0.55 | 0.52 | 0.51 | 0.52 | 0.58 | 2.08 |
| n-Pentane | 0.54 | 0.51 | 0.48 | 0.45 | 0.43 | 0.43 | 0.49 | 2.03 |
| Hexanes | 0.72 | 0.63 | 0.54 | 0.48 | 0.45 | 0.46 | 0.58 | 4.60 |
| Heptanes plus | 5.14 | 4.41 | 3.43 | 2.53 | 1.85 | 1.54 | 1.53 | 62.22 |
| | 100.00 | 100.00 | 100.00 | 100.00 | 100.00 | 100.00 | 100.00 | 100.00 |
| Molecular weight of heptanes plus | 145 | 133 | 123 | 117 | 113 | 111 | 111 | 164 |
| Density of heptanes plus | 0.798 | 0.786 | 0.776 | 0.770 | 0.766 | 0.763 | 0.763 | 0.810 |
| Deviation Factor - Z | | | | | | | | |
| Equilibrium gas | 0.969 | 0.908 | 0.864 | 0.849 | 0.867 | 0.908 | 0.949 | |
| Two-phase | 0.969 | 0.912 | 0.866 | 0.836 | 0.823 | 0.814 | 0.775 | |
| Well Stream produced-Cumulative percent of initial | 0.000 | 7.944 | 19.485 | 33.717 | 50.031 | 67.010 | 81.180 | |

*Equilibrium liquid phase.
Rate No. 5 Test

These analyses, opinions or interpretations are based on observations and material supplied by the client to whom, and for whose exclusive and confidential use, this report is made. The interpretations or opinions expressed represent the best judgement of Core Laboratories, Inc. (all errors and omissions excepted), but Core Laboratories, Inc. and its officers and employees, assume no responsibility and make no warranty or representations as to the productivity, proper operation, or profitableness of any oil, gas or other mineral well or in connection with which such report is used relied upon.

## CALCULATED CUMULATIVE RECOVERY DURING DEPLETION

| Cumulative Recovery per MMSCF of Original Fluid | Initial in Place | Reservoir Pressure - PSIG 4731 | 4100 | 3400 | 2700 | 2000 | 1300 | 700 |
|---|---|---|---|---|---|---|---|---|
| Well Stream - MSCF | 1000 | 0 | 79.44 | 194.85 | 337.17 | 500.31 | 670.10 | 811.80 |
| Normal Temperature Separation* | | | | | | | | |
| Stock Tank Liquid - Barrels | 93.29 | 0 | 6.07 | 12.76 | 18.89 | 24.20 | 29.00 | 33.02 |
| Primary Separator Gas-MSCF | 851.40 | 0 | 69.06 | 172.04 | 302.11 | 453.89 | 612.85 | 748.26 |
| Second Stage Gas - MSCF | 38.37 | 0 | 2.70 | 5.96 | 9.21 | 12.27 | 15.24 | 15.78 |
| Stock Tank Gas - MSCF | 32.75 | 0 | 2.35 | 5.31 | 8.39 | 11.42 | 14.47 | 16.18 |
| Total "Plant Products" in Primary Separator Gas - Gallons | | | | | | | | |
| Ethane | 2470 | 0 | 201 | 502 | 885 | 1336 | 1817 | 2249 |
| Propane | 867 | 0 | 72 | 183 | 327 | 501 | 689 | 877 |
| Butanes (total) | 321 | 0 | 27 | 70 | 128 | 201 | 281 | 373 |
| Pentanes plus | 112 | 0 | 9 | 24 | 44 | 70 | 98 | 136 |
| Total "Plant Products" in Second Stage Gas - Gallons | | | | | | | | |
| Ethane | 250 | 0 | 18 | 39 | 60 | 80 | 100 | 103 |
| Propane | 115 | 0 | 8 | 19 | 29 | 40 | 50 | 51 |
| Butanes (total) | 41 | 0 | 3 | 7 | 11 | 15 | 20 | 20 |
| Pentanes plus | 12 | 0 | 1 | 2 | 3 | 4 | 6 | 6 |
| Total "Plant Products" in Well Stream - Gallons | | | | | | | | |
| Ethane | 2981 | 0 | 237 | 581 | 1006 | 1497 | 2017 | 2464 |
| Propane | 1406 | 0 | 111 | 269 | 462 | 682 | 916 | 1125 |
| Butanes (total) | 836 | 0 | 64 | 155 | 264 | 388 | 518 | 639 |
| Pentanes plus | 3744 | 0 | 244 | 517 | 773 | 1004 | 1219 | 1412 |

*Primary separator at 630 psig and 62°F., reduced to 300 psig for reservoir pressure below 1300 psig; second stage at 130 psig and 60°F.; stock tank at 60°F.

Rate No.5 Test

These analyses, opinions or interpretations are based on observations and material supplied by the client to whom, and for whose exclusive and confidential use, this report is made. The interpretations or opinions expressed represent the best judgement of Core Laboratories, Inc. (all errors and omissions excepted), but Core Laboratories, Inc. and its officers and employees, assume no responsibility and make no warranty or representations as to the productivity, proper operation, or profitableness of any oil, gas or other mineral well or in connection with which such report is used relied upon.

## CALCULATED INSTANTANEOUS RECOVERY DURING DEPLETION

| | Reservoir Pressure - PSIG | | | | | | |
|---|---|---|---|---|---|---|---|
| | 4731 | 4100 | 3400 | 2700 | 2000 | 1300 | 700 |
| **Normal Temperature Separation*** | | | | | | | |
| Stock Tank Liquid Gravity, °API at 60°F. | 56.4 | 59.6 | 62.9 | 65.5 | 67.9 | 69.7 | 69.6 |
| Separator Gas/Well Stream Ratio, MSCF/MMSCF | | | | | | | |
| Primary Separator Gas Only | 851.40 | 869.29 | 892.32 | 913.96 | 930.37 | 936.20 | 955.63 |
| Primary and Second Stage Separator Gases | 889.77 | 903.24 | 920.59 | 936.82 | 949.13 | 953.65 | 959.49 |
| Separator Gas/Stock Tank Liquid Ratio, SCF/STB | | | | | | | |
| Primary Separator Gas Only | 9126 | 11379 | 15397 | 21210 | 28562 | 33150 | 33674 |
| Primary and Second Stage Separator Gases | 9537 | 11824 | 15885 | 21740 | 29138 | 33767 | 33810 |
| **GPM from Smooth Well Stream Compositions** | | | | | | | |
| Ethane plus | 8.967 | 8.255 | 7.505 | 6.915 | 6.532 | 6.470 | 6.838 |
| Propane plus | 5.986 | 5.277 | 4.524 | 3.923 | 3.521 | 3.410 | 3.686 |
| Butanes plus | 4.580 | 3.885 | 3.149 | 2.568 | 2.172 | 2.035 | 2.210 |
| Pentanes plus | 3.744 | 3.075 | 2.362 | 1.801 | 1.417 | 1.267 | 1.357 |

*Primary separator at 630 psig and 62°F., reduced to 300 psig for reservoir pressure below 1300 psig; second stage at 130 psig and 60°F.; stock tank at 60°F.

Rate No.5 Test

These analyses, opinions or interpretations are based on observations and material supplied by the client to whom, and for whose exclusive and confidential use, this report is made. The interpretations or opinions expressed represent the best judgement of Core Laboratories, Inc. (all errors and omissions excepted), but Core Laboratories, Inc. and its officers and employees, assume no responsibility and make no warranty or representations as to the productivity, proper operation, or profitableness of any oil, gas or other mineral well or in connection with which such report is used relied upon.

## RETROGRADE CONDENSATION DURING GAS DEPLETION AT 220°F.

| Pressure, PSIG | Retrograde Liquid Volume, Percent of Hydrocarbon Pore Space |
|---|---|
| 4731 Dew Point Pressure | 0.0 |
| 4700 | Trace |
| 4600 | 0.3 |
| 4450 | 0.9 |
| 4250 | 2.2 |
| 4100 | 3.2 |
| 3400 | 7.2 |
| 2700 | 9.6 |
| 2000 | 10.0 |
| 1300 | 9.6 |
| 700 | 8.9 |
| 0 | 7.6 |

Rate No. 5 Test

These analyses, opinions or interpretations are based on observations and material supplied by the client to whom, and for whose exclusive and confidential use, this report is made. The interpretations or opinions expressed represent the best judgement of Core Laboratories, Inc. (all errors and omissions excepted); but Core Laboratories, Inc. and its officers and employees, assume no responsibility and make no warranty or representations as to the productivity, proper operation, or profitableness of any oil, gas or other mineral well or in connection with which such report is used relied upon.

DEVIATION FACTOR Z OF WELL STREAM DURING DEPLETION AT 220°F.

Company DAVIS OIL COMPANY Formation
Well LOGAN FEDERAL NO. 1 County SUMMIT
Field PINEVIEW State UTAH

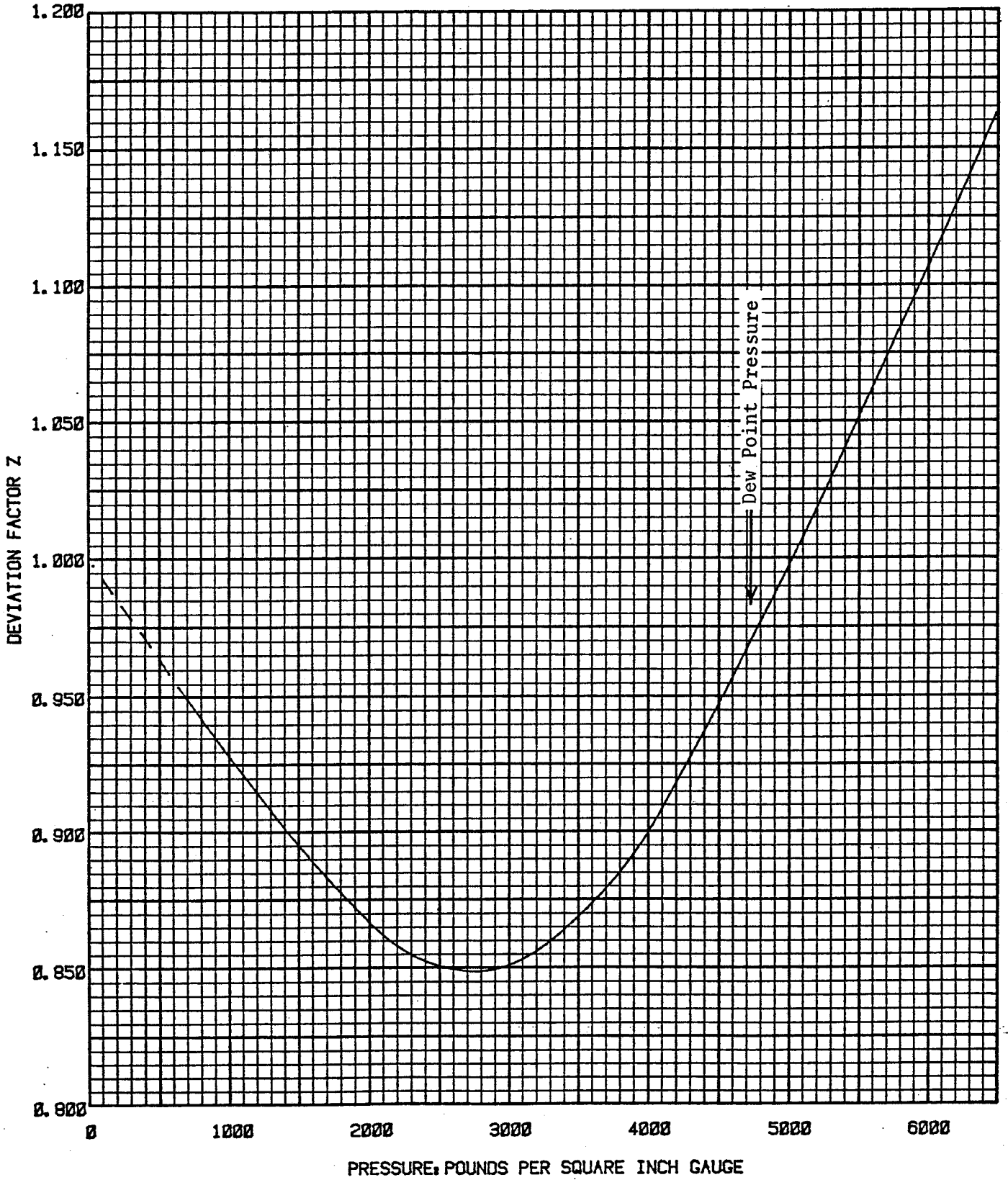

# VOLUME OF WELL STREAM PRODUCED DURING DEPLETION

Company DAVIS OIL COMPANY
Formation
Well LOGAN FEDERAL NO. 1
County SUMMIT
Field PINEVIEW
State UTAH

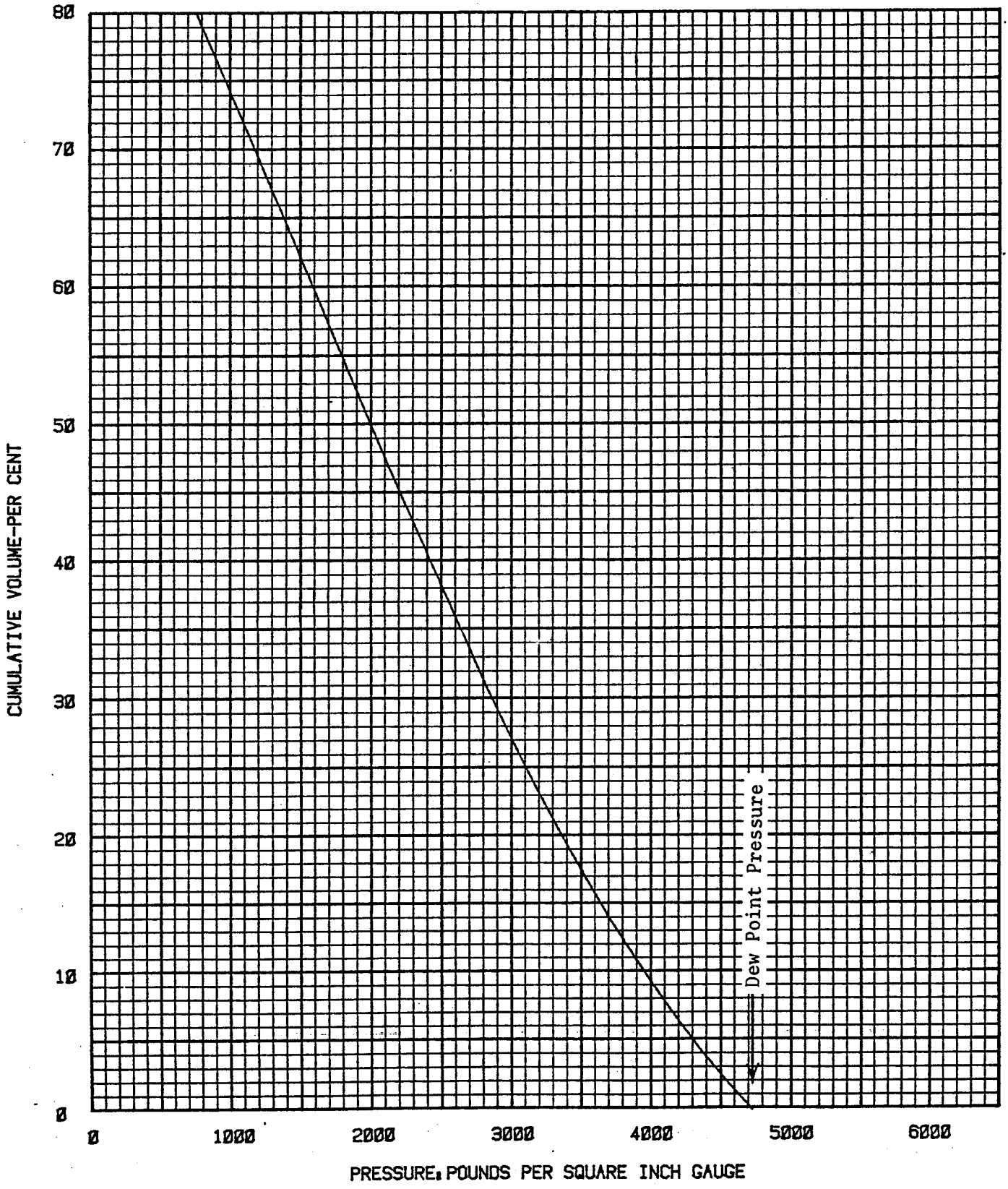

File RFL 820563

CORE LABORATORIES, INC.
*Petroleum Reservoir Engineering*
DALLAS, TEXAS

# CUMULATIVE RECOVERY DURING DEPLETION

Company DAVIS OIL COMPANY
Formation
Well LOGAN FEDERAL NO. 1
County SUMMIT
Field PINEVIEW
State UTAH

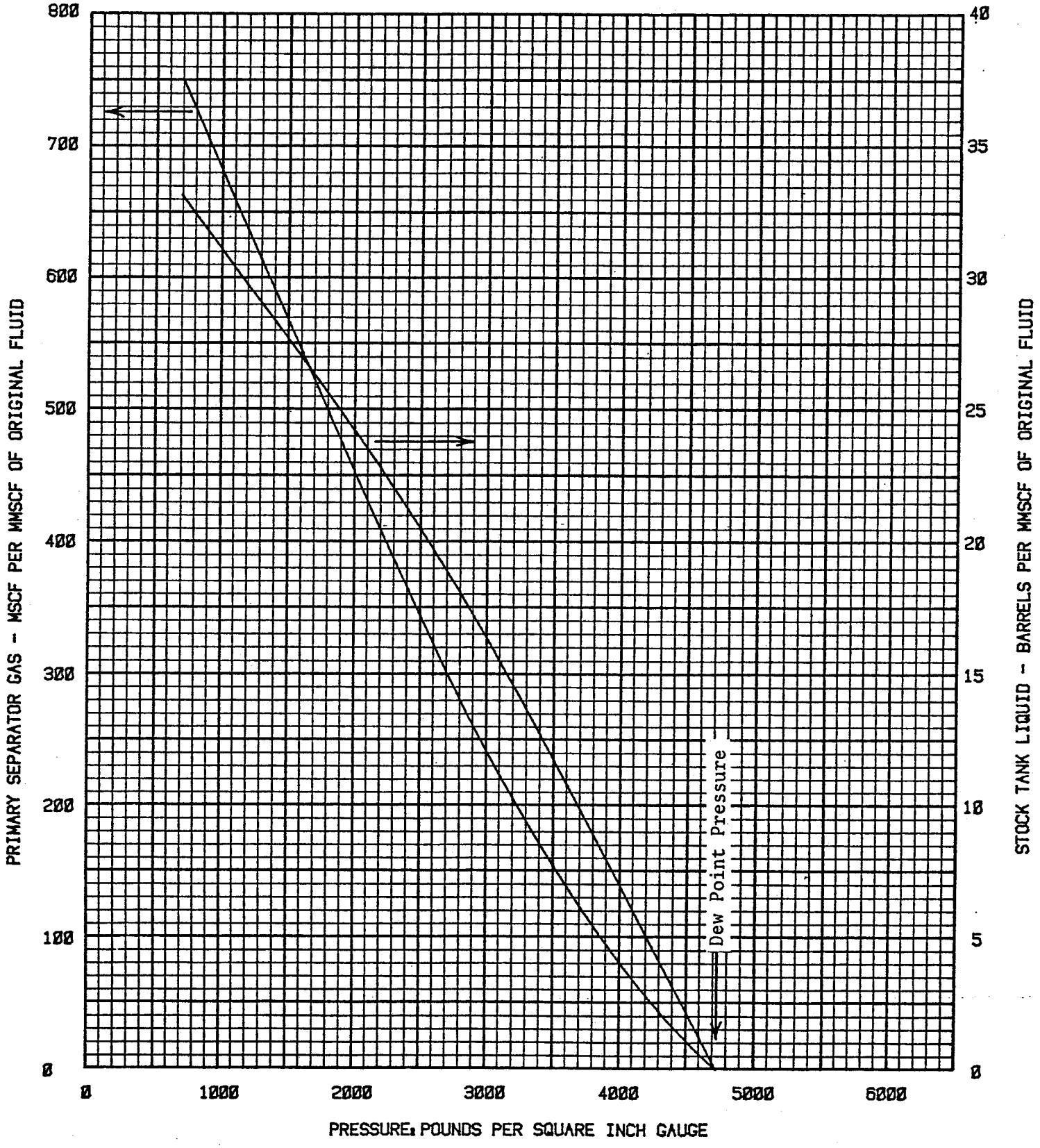

File RFL 820563

CORE LABORATORIES, INC.
*Petroleum Reservoir Engineering*
DALLAS, TEXAS

# CUMULATIVE RECOVERY-PLANT PRODUCTS IN PRIMARY SEPARATOR GAS

Company DAVIS OIL COMPANY
Formation
Well LOGAN FEDERAL NO. 1
County SUMMIT
Field PINEVIEW
State UTAH

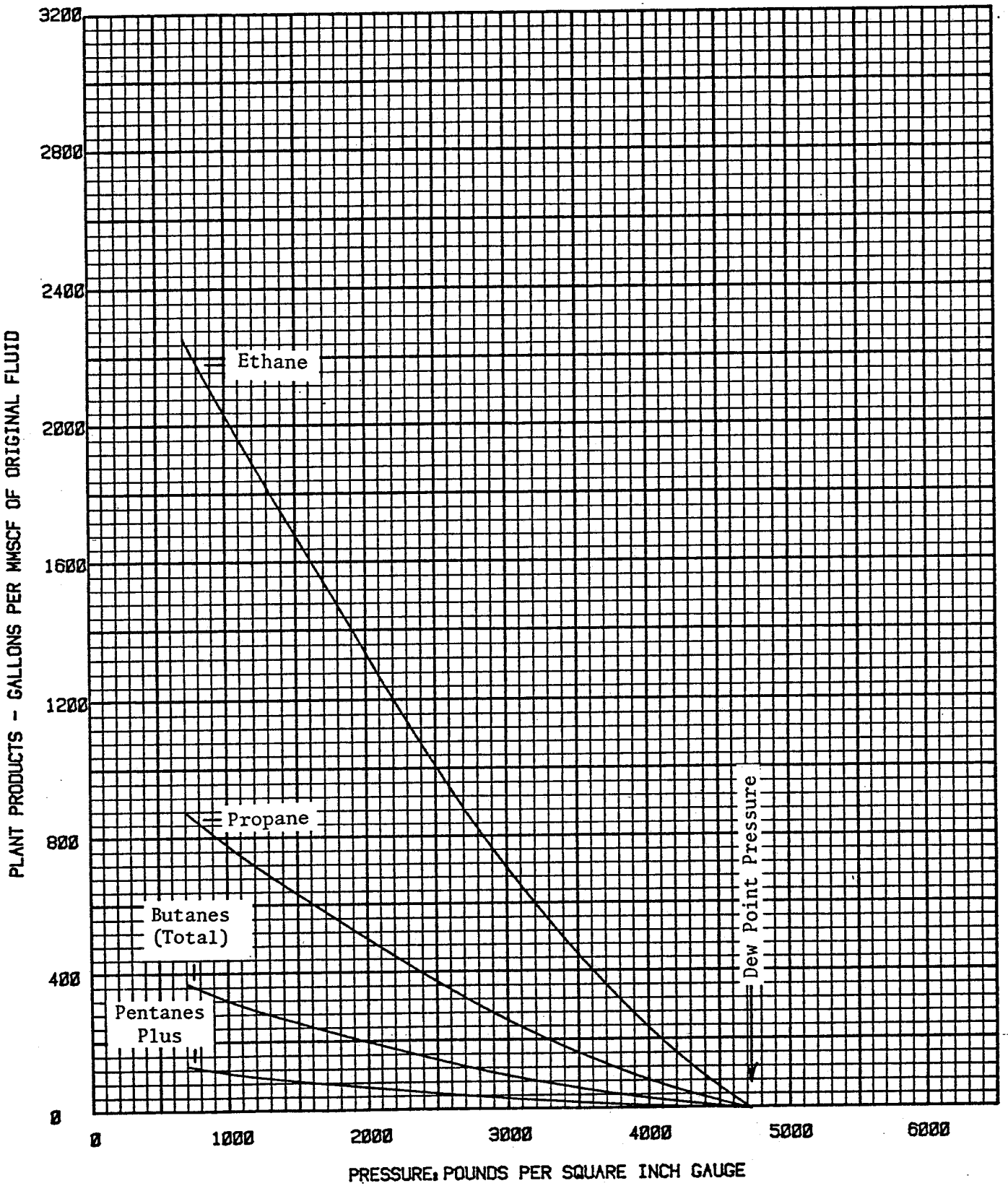

File RFL 820563

CORE LABORATORIES, INC.
*Petroleum Reservoir Engineering*
DALLAS, TEXAS

RETROGRADE CONDENSATION DURING DEPLETION

Company DAVIS OIL COMPANY
Formation
Well LOGAN FEDERAL NO. 1
County SUMMIT
Field PINEVIEW
State UTAH

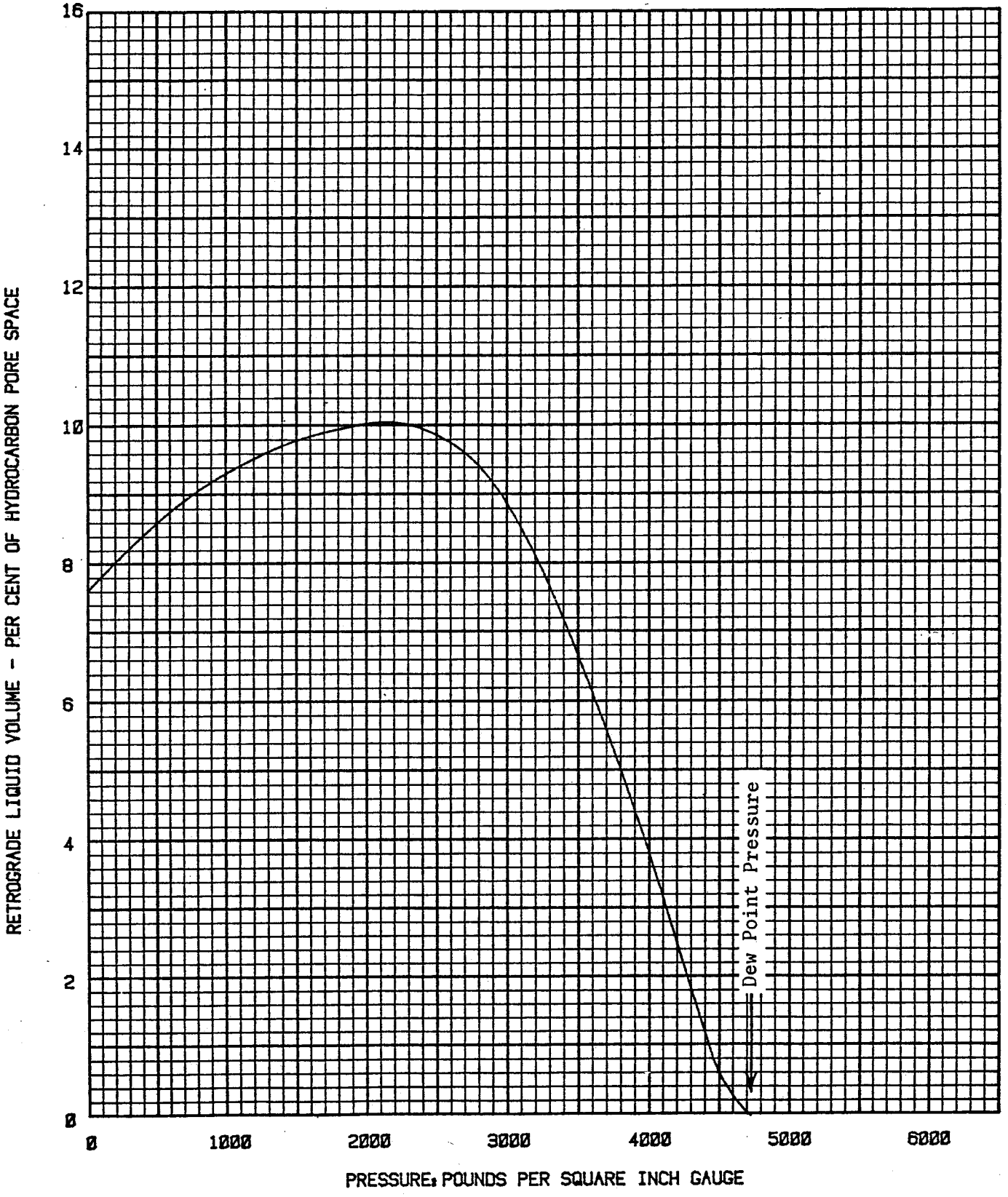

EXHIBIT #2

Logan Federal #1
Sec. 26 T3N-R7E
Summit County, Utah
TD: 13,492' PBTD: 13,307'
Elevations: 7514' KB
7489' GL

WELLBORE SCHEMATIC

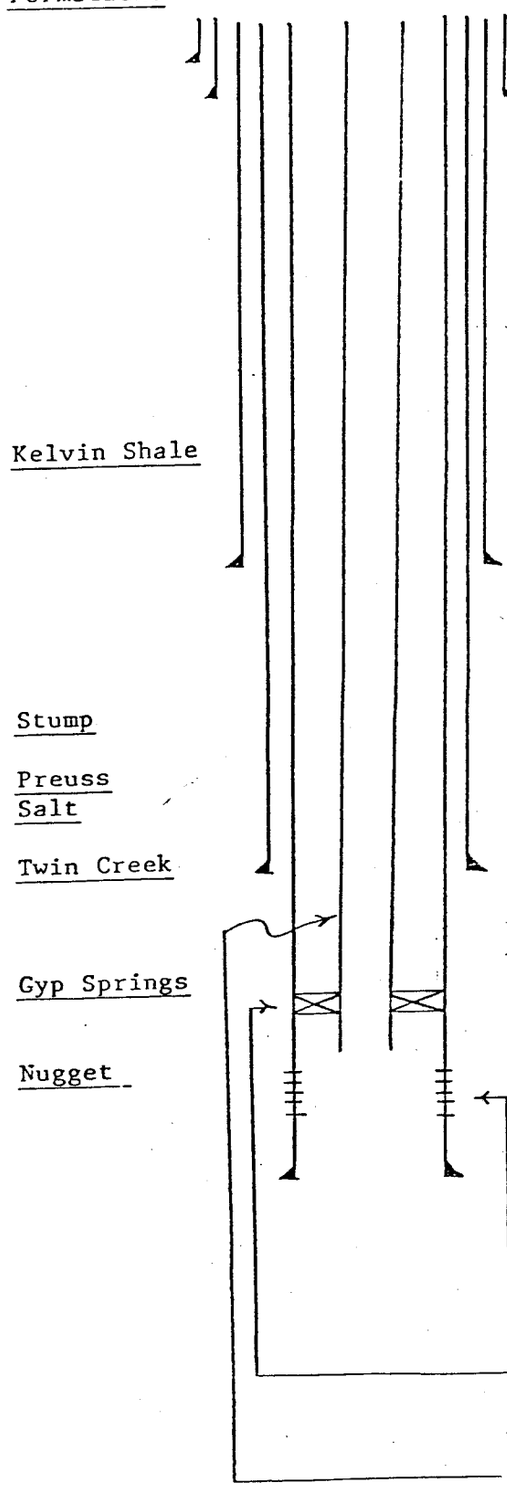


depth,size,wt,grade,CPLG,hole size,cement

40', 30" cemented to surface
1008', 20", 133, K-55, STC, 26" hole,cemented to surface w/1766 sx.

5730', 13 3/8",(54.5,68,72#) (K-55,S-95), STC, 17½" hole, cemented to surface w/1700 sx.

11,432', 9 5/8", (47,53.5,62.8#), (N-80,P-110,SM95T) LTC, 12¼" hole, Cemented w/ 900 sx.

13,488', 7", (35,38#) P-110, LTC, 8½" hole, Cemented w/ 1000 sx.

Nugget Perfs: 12804-12826 (45-0.5" holes)
12860-12895 (44-0.36" holes)
12910-12926 (19-0.36" holes)

Wireline Set Baker Model Retriever -'D' packer set at 12,710' w/2.197" ID 'R' nipple.

2 7/8", 6.5#, EUE, 8rd, N-80 tubing.

Perforations 12804-12826 and 12860-12895 were stimulated with 200 bbls Nugget Crude with 10 gal/M HYFLO IV and 5 gal/M FR-5 with 45 (1.1 sg) ball sealers.

ps

Logan Federal #1
Sec. 26 T3N-R7E
Summit County, Utah
TD: 13,492' PBTD: 13,307'
Elevations: 7514' KB
7489' GL

PROPOSED WELLBORE SCHEMATIC

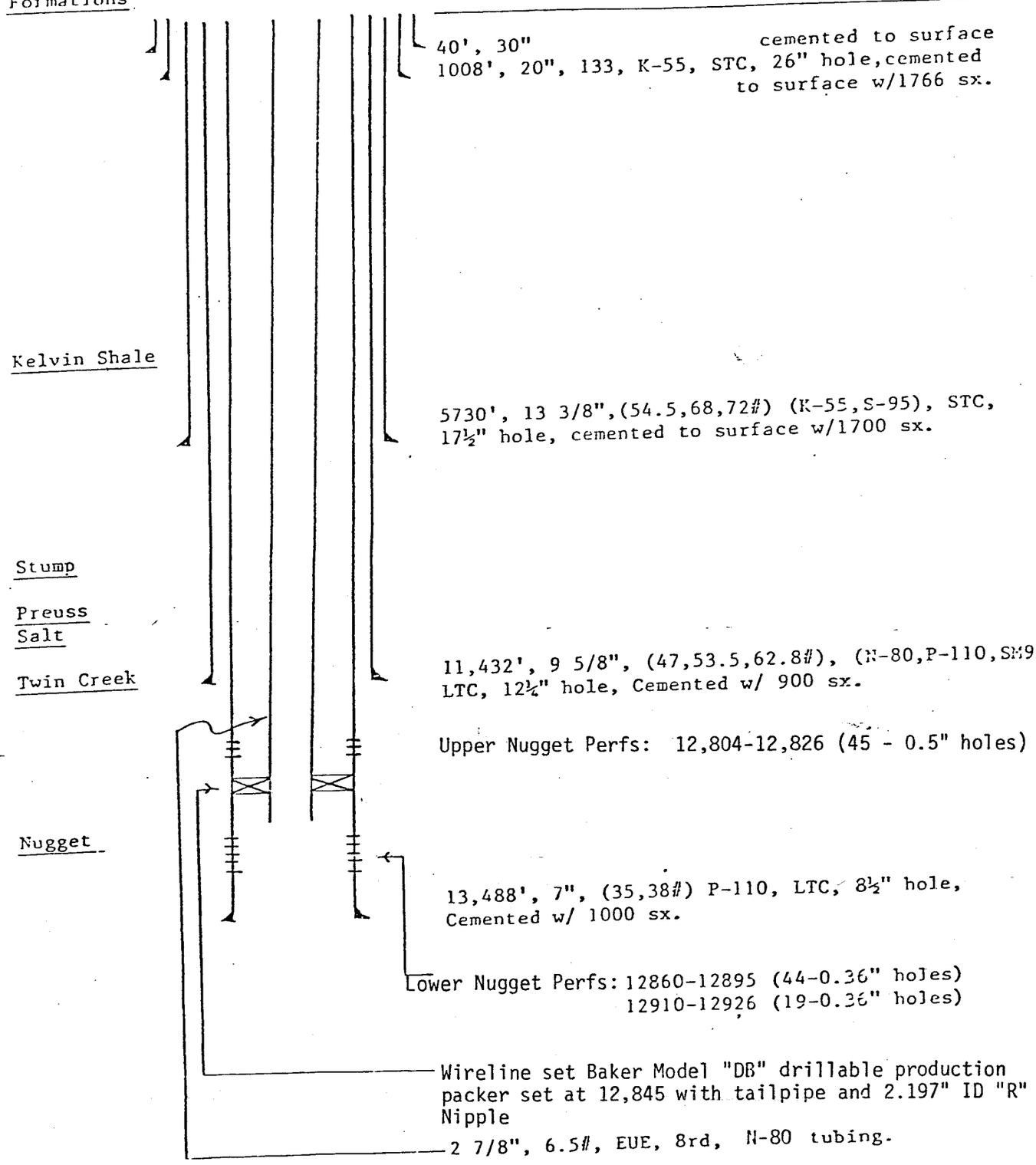


Perforations 12804-12826 and 12860-12895 were stimulated with 200 bbls Nugget Crude with 10 gal/M HYFLO IV and 5 gal/M FR-5 with 45 (1.1 sg) ball sealers.

gps

EXISTING WELLHEAD SCHEMATIC

Sec. 28 T3N R7E
Summit County, Utah
Elevations: 7514' KB
7489' GL

EXHIBIT #4

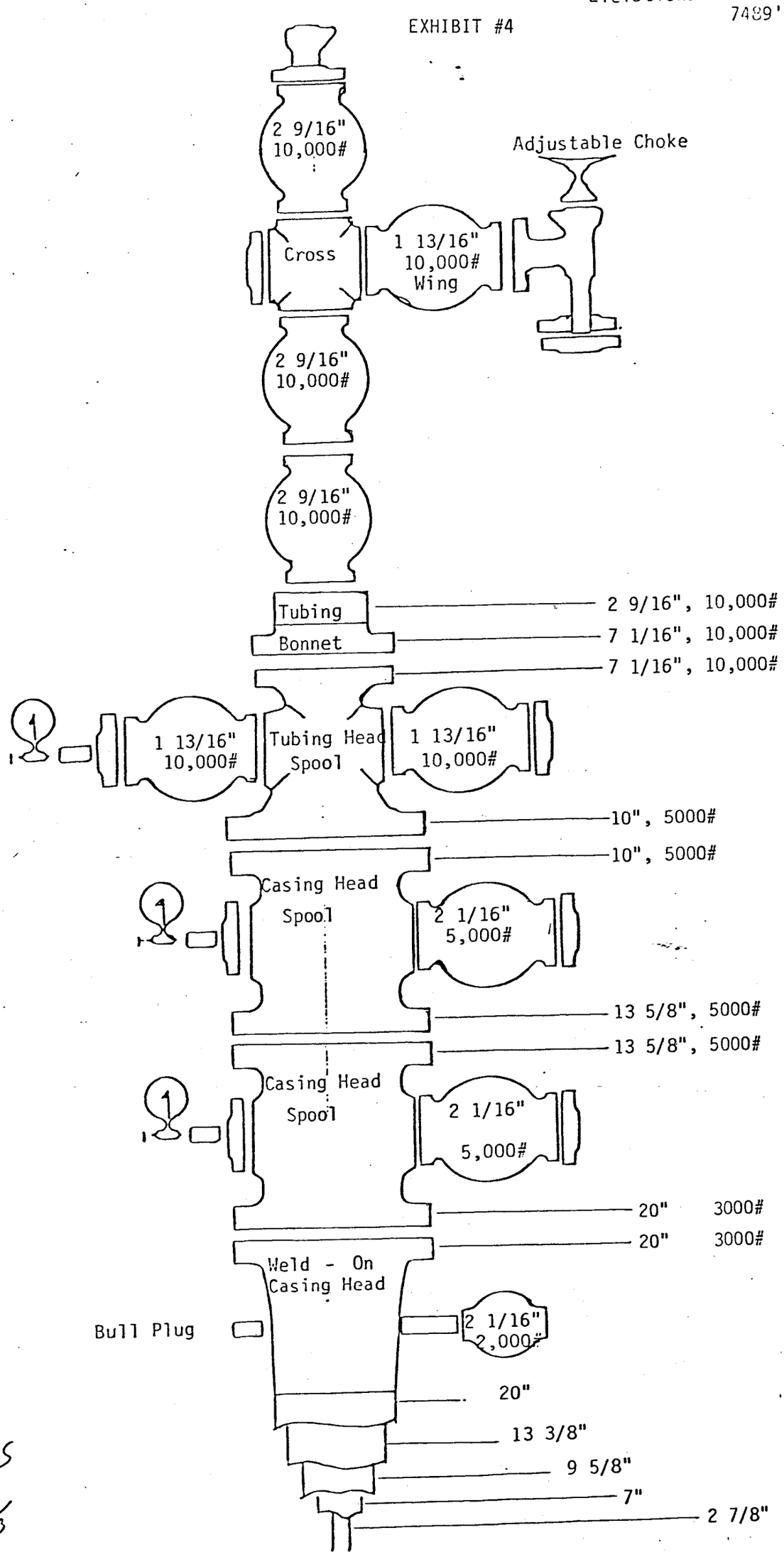


BS

18

PROPOSED WELLHEAD SCHEMATIC

Summit County, Utah
Elevations: 7514' KB
7489' GL

EXHIBIT #5

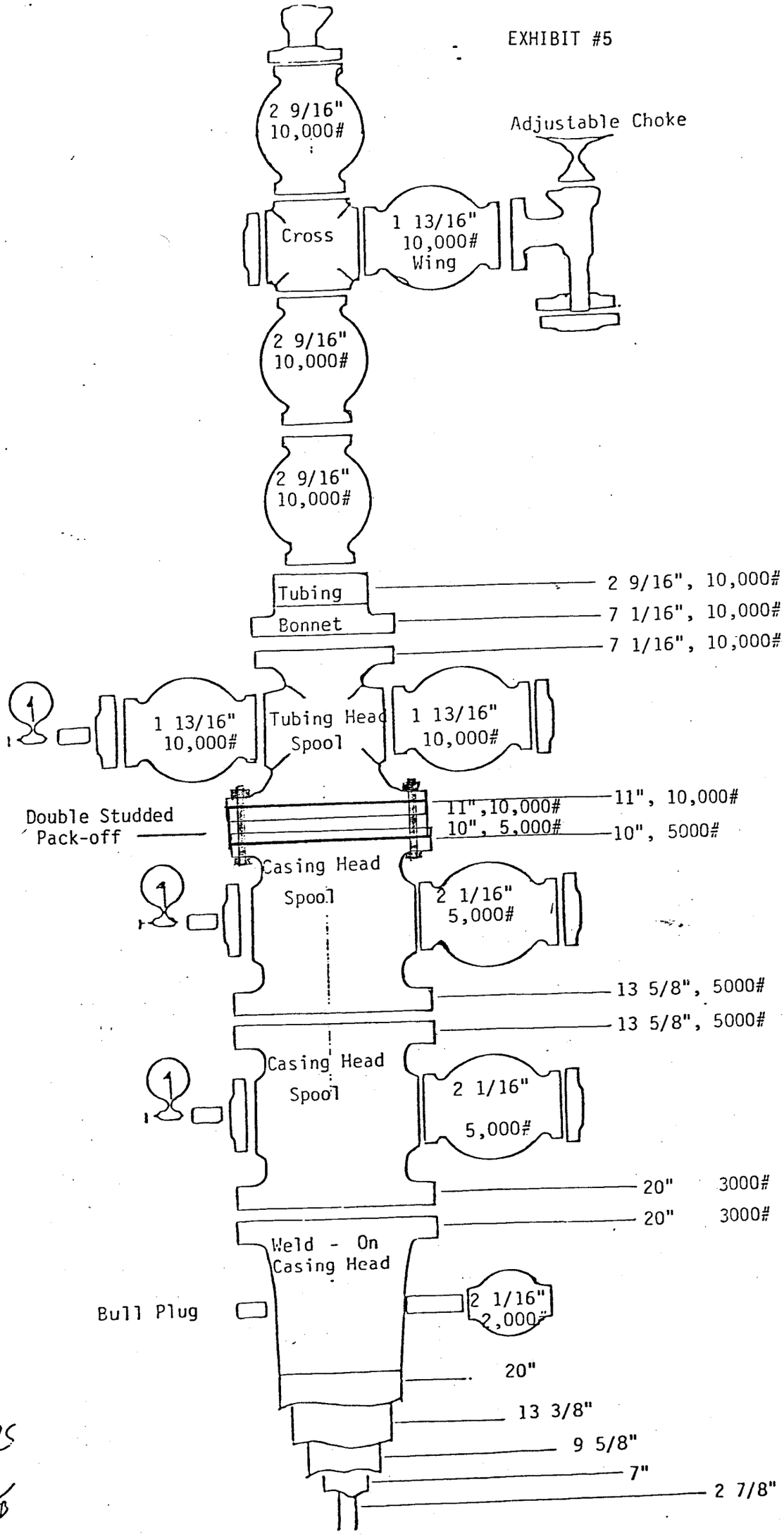

6[illegible] South Cherry Street
Cherry Creek Plaza, Suite 127
Denver, Colorado 80222

MINERALS MANAGEMENT SERVICE
OIL & GAS OPERATIONS
RECEIVED
OCT 12 1982
SALT LAKE CITY, UTAH

C-E N[illegible]O, COMBUSTION ENGINEERING, INC.
P.O. BOX 1710, TULSA, OKLAHOMA 74101
TELEX 49 2427 CABLE NATCO
TELEPHONE 918 663 9100

NATCO

EXHIBIT #6

# QUOTATION

Davis Oil Company
410 Seventeenth Street Suite 1400
Denver, Colorado 80202

Attention Mr. Tom Bowman

QUOTATION NO: 73810427(82)
DATE: October 5, 1982
BRANCH: Denver, Colorado
YOUR REFERENCE: Verbal to Hoss
JOB SITE: Fed. Logan #1
Summit County, Utah
7369

Thank you for your inquiry. We appreciate this opportunity to quote on your requirements in accord with the following specifications, prices, deliveries and terms. Terms and Conditions of Contract are printed on the last two (2) pages.

ITEM I - USED L.T.X. UNIT

One USED C-E Natco Skid Mounted L.T.X. UNIT, complete with:

1) High pressure liquid knock out.
2) Oil-Gas-Water classifier vessel.
3) L.T.X. separator.
4) Low pressure flash separator.
5) L.T.X. choke heat exchanger.
6) Prepiped.
7) Skid 9-1/2' wide x 25' long.
8) 12-15 tons (approximate) weight.

PRICE, F.O.B. Harvey, Louisiana . . . . . $ 62,250.00

Note: A rental/purchase plan is available on this unit. Cost would be $2,675.00 per month for a minimum rental time of one (1) year with 55% of rentals paid to be applicable toward purchase of unit.

Delivery: Three to four weeks after receipt of an order.

Also requires a 250,000 BTU/Hr indirect heater $3000.00

ORIGINAL (CUSTOMER)



NTC-10-A-8(3/82)

Seller cannot warrant compliance with State, Local, Federal or Industry Codes due to "USED" nature of specified equipment.

Unless otherwise stated in this quotation, the described equipment has not been pressure tested in the "USED" condition. If customer specifies, C-E Natco will pressure test equipment before shipment. This testing will be charged to customer on a time, labor and material basis. If the testing is required, a representative of the purchaser or his designee must be present.

Validity: This quotation is valid for 30 days from quote date.

Terms: Net 30 days from invoice date.

# TERMS AND CONDITIONS OF CONTRACT

1 Title and risk of loss pass to Purchaser at the f.o.b. point on rail, truck, express and/or parcel post shipments. On air transport and/or barge shipment, title and risk of loss pass to Purchaser at Seller's shop door.

2 Prices quoted for products are based on receiving orders for the quantity specified.

3 Prices expire 30 days from date of quotation, if not cancelled prior to that time by Seller's written notice of cancellation. Stock materials included in quotation are subject to prior sale.

4 If Purchaser requests or causes a change in Seller's quoted schedule or method of engineering, fabrication and/or shipment which results in delay or additional expense to Seller, all costs incurred shall be for the account of Purchaser, including storage charges in the event of a suspension of fabrication and/or delivery, and the delivery date shall be equitably adjusted.

5 The terms/method of shipment of Seller's goods shall be at Purchaser's election, per the quotation. Freight charges will be supported by appropriate shipping documents. An administrative fee of 5% of the freight charge, not to exceed $200, will be added to prepaid freight shipments.

6. Shipment and delivery dates are estimates only.

7. In the event Seller's performance is delayed by strikes, labor difficulties, fires, floods, action of the elements, losses of or damage to merchandise in transit, embargoes, postponements or suspension in sailing of vessels, freight car or truck shortages. Acts of God or public enemies or secret agents, war, riots, civil commotion, terrorist activity, insurrection, malicious damage, requisition or destruction of or damage to goods or merchandise by virtue of public authority, acts of civil or military authorities, quarantine restrictions, delay or failure in any type of transportation, shortage of transportation or fuel or power or labor or materials, or to any circumstance or accident beyond the control of Seller or its suppliers, Seller agrees to resume performance as soon as practicable after the termination of the delay causing contingency which shall be Seller's sole liability for delay and the time for performance shall be extended by the length of the period of delay, including resumption of normal production time. Should Seller be so delayed, Seller shall notify Purchaser within seven (7) working days of the commencement of the delay.

8. All sales and/or purchase prices assume continuous use and/or free ingress and egress to and from Purchaser's site by Seller's crew(s) on all-weather roads without additional costs to Seller, including permit or work fees.

9 Seller warrants new products of its manufacture to be free from defective workmanship and material for a period of 12 months from date of equipment startup or 18 months from date of Seller's transmittal of notice of readiness for shipment to Purchaser, whichever period expires first, provided Purchaser subjects the equipment only to the operating conditions specified by Purchaser when the order is placed and in accordance with Seller's written operating instructions, if any. Seller does not warrant components manufactured by others but shall exert good faith effort to assign such component manufacturers' guarantees to Purchaser.

in the event of a breach of this warranty, Seller shall at its option repair the defective part or furnish a replacement part, either to be f.o.b. Seller's fabrication plant.

Equipment Performance Guarantees, if any, are limited to those specifically described in the quotation.

Seller makes no warranty with respect to service work or to parts requiring replacement due to wear and tear or to used equipment or to painting/coating/lining. Except for the warranty expressly stated above, there are no other warranties and none shall be implied by law, including those of MERCHANTABILITY and FITNESS FOR A PARTICULAR PURPOSE.

10. To the extent of Seller's sole or contributory or comparative negligence, Seller indemnifies and will hold Purchaser harmless from any liability to third parties for bodily injury or property damage which arise out of and during Seller's performance under the contract. Seller's liability for damages to Purchaser's tangible property shall be limited to repair or replacement of the damaged part or parts of the goods furnished under the contract. In no event shall Seller be liable to Purchaser for delays, curtailment of plant operations, process failure, pollution, loss of profits, costs for removing any parts or equipment to be repaired or replaced, transportation and installation charges in connection with the repair, replacement, or servicing of any parts or equipment. Nor shall Seller be liable for any special, indirect or consequential damages of any nature or kind due to any cause whatsoever, whether arising in contract, tort, warranty, strict liability, or any other legal theory. Any drawings or general information furnished to aid Purchaser in installation or erection of goods sold are furnished for Purchaser's convenience only, are not warranted by Seller, and Seller shall incur no liability whatsoever arising therefrom.

Purchaser agrees to hold Seller harmless from claims and liabilities regarding pollution regardless of source.

Seller shall provide the following forms of insurance:

(1) Workmen's Compensation Insurance including Employer's Liability Insurance in accordance with the laws of the state in which Seller may be required to pay compensation.

(2) Public Liability Insurance with an individual limit of not less than $100,000 and a total for any one accident of not less than $300,000.

11. Unless otherwise specifically stipulated elsewhere in the Contract Documents, the Seller shall pay all royalties and license fees and assume all costs and expenses incident to the use of any invention, composition, process, device, article, appliance or design which is the subject of patent rights, copyrights or other legal rights of ownership, held by others, as are applicable to the goods manufactured by Seller and furnished hereunder. The Seller shall indemnify and hold harmless the Purhcaser and anyone directly or indirectly employed by either of them from and against all claims, damages, losses and expenses, including attorney's fees, arising out of any infringement of such rights during or after completion of the Work, and shall defend all such claims in connection with any alleged infringement of such rights. The Seller must be notified promptly in writing and given authority, information and assistance (at the Seller's expense) for the defense of same, and the Seller shall pay all damages and costs awarded therein, against the Purchaser not exceeding the price paid or due to the Seller for the equipment held to infringe. The Seller shall have no liability for claims of infringement by its equipment in the form in which supplied, if used for purposes other than those designed by the Seller, or if claims of infringement arise out of the use of Seller's equipment in conjunction with other equipment not supplied by Seller. Unless the use of an infringing item or part is enjoined, the Seller shall, at its own expense and at the option of the Seller, either procure for the Purchaser the right to continue using said item or part; or replace same with non-infringing items; or modify it so that it becomes non-infringing, or remove said items and refund the purchase price thereof. These provisions shall not apply to any item, or any part thereof, manufactured to Purchaser's design (and with respect to such items, or any part thereof, the Seller assumes no liability whatsoever for patent infringement and Purchaser agrees to indemnify Seller therefor) nor for patent infringement by equipment not manufactured by Seller, although furnished hereunder. The foregoing constitutes the Seller's entire warranty and liability for patent infringement.

12. Seller reserves the right to cancel shipment at any time prior to delivery of products without further obligation or liability on Seller's part if Purchaser's credit or financial condition is unsatisfactory to Seller.

13. Terms are net 30 days from date of invoice.

Seller shall issue an invoice at time of notification of readiness for shipment, even though Purchaser requests that shipment be delayed.

14. Interest will be charged on past due accounts at the maximum lawful rate.

15. All prices are exclusive of applicable taxes unless otherwise agreed in writing by an executive officer of Seller. If Seller is obligated to pay any such taxes, Purchaser shall, upon demand, reimburse Seller for amounts so paid.

16. All packages, prefabricated or skid mounted assemblies shall be assembled in Seller's plant to the extent practicable. All such assembled units shall be disassembled prior to shipping only as necessitated for loading on the transportation facility involved and all field reassembly necessary to place units in operable condition shall be done by and at Purchaser's expense.

17. All materials and parts shall be packaged for shipment at the lowest acceptable rate by common or other carrier, or any other method deemed necessary or advisable by Seller.

18. Any inspection or acceptance required by Purchaser shall take place at Seller's fabrication plant; it being expressly understood, however, that inspection and acceptance at the fabrication plant shall not in any way relieve Seller of its Warranty responsibilities as stated in this contract.

19. Purchaser shall be responsible for and pay for all costs, fees and licenses occasioned by any law, order, rule or regulation relative to inspection of the material or labor sold hereunder such as those pertaining to boiler, electrical and other inspections.

20. Seller may subcontract any and all orders.

21. Radiographic films, if any, shall remain the property of Seller and shall be available to inspection for ten years at Seller's shop by any accredited representative of Purchaser.

22. If the products sold hereunder or this quotation is within the meaning of Executive Order 11246, the non-discrimination provisions of Section 202 of that order shall be deemed incorporated herein, and applicable to the parties hereto.

    Each party hereto assures the other party that it does not and will not maintain any facilities it provides for its employees in a segregated manner, or permit its employees to perform services at any location, under its control, where segregated facilities are maintained and that prior to the award of any non-exempt subcontract or purchase order exceeding $10,000, the awarding party will obtain a similar certification from any prospective subcontractor or supplier which may perform work which is necessary, in whole or in part, to the performance of any non-exempt contract or subcontract hereunder.

    In addition, if the value of the contract and/or purchase order exceeds $50,000 and the Seller has more than 50 employees, the Seller may be required:

    A. to file on or before March 31 of each year Standard Form 100 (EEO-1) with the appropriate government agency; and

    B. develop a written affirmative action program for each of its establishments.

23. Seller certifies that it will comply with all federal, state and local laws and regulations applicable to its performance. Unless specifically included in Seller's quotation, Seller does not assure that its goods or performance will permit Purchaser's compliance with laws, rules or regulations applicable to owners or users of the goods and services provided under the quotation, including, but not limited to, the Williams-Steiger Occupational Safety and Health Act of 1970.

24. In the event the terms and conditions contained in any purchase order or contract issued by Purchaser or on any invoice issued by Seller should conflict with, add to, or delete from the terms and conditions contained herein, the terms and conditions contained herein shall prevail, control over and supersede all other conflicting, additional and/or contrary terms and conditions unless prior to issuance of such purchase order or contract by Purchaser, or prior to issuance of such invoice by Seller, both Seller and Purchaser agreed in writing to amend the terms and conditions contained herein accordingly, and acceptance of this offer is hereby expressly limited to the terms stated herein.

25. The validity of this contract and performance hereunder shall be governed by and construed in accordance with the laws of the State of Oklahoma, U.S.A.

**Chemical Sales:**

The following terms and conditions are applicable to chemical sales only. Where these terms and conditions conflict with Clauses 1 through 25, these terms and conditions shall take precedence.

26. Seller's sole obligation under warranty shall be replacement of chemical. Seller makes no warranty, express or implied, of fitness for particular use or otherwise, except that the products sold hereunder shall be of industry standard specifications or such other specifications as shall have been agreed to in writing by Seller and Purchaser, and Purchasr assumes all risk whatever as to result of use of products purchased, whether used singly or in combination with other substances or in any process. Warranty shall expire at the end of six months from date order is received by Seller.

27. Seller's liability for damages, regardless of what the cause may be, shall be limited to replacement of defective chemicals.

28. Seller shall have no responsibility for patent infringement resulting from sale or use of chemicals supplied. Nor shall Seller have any responsibility for patent infringement resulting from use of chemicals sold by Seller which are manufactured by others.

cc: C-E Natco - Salt Lake City, Utah
Tulsa, Oklahoma (3)

C-E NATCO
A DIVISION OF COMBUSTION ENGINEERING, INC.

By _____
MAURICE HOSS

EXHIBIT #7

October 7, 1982
Logan Federal #1
Sec. 26 T3N R7E
Summit County, Utah
T.D.: 13,492' PBTD: 13, 30
Elevations: 7514' KB
7489' GL

PROPOSED SURFACE FACILITIES

FOR LTX SEPARATION
(Low Temperature Extraction)

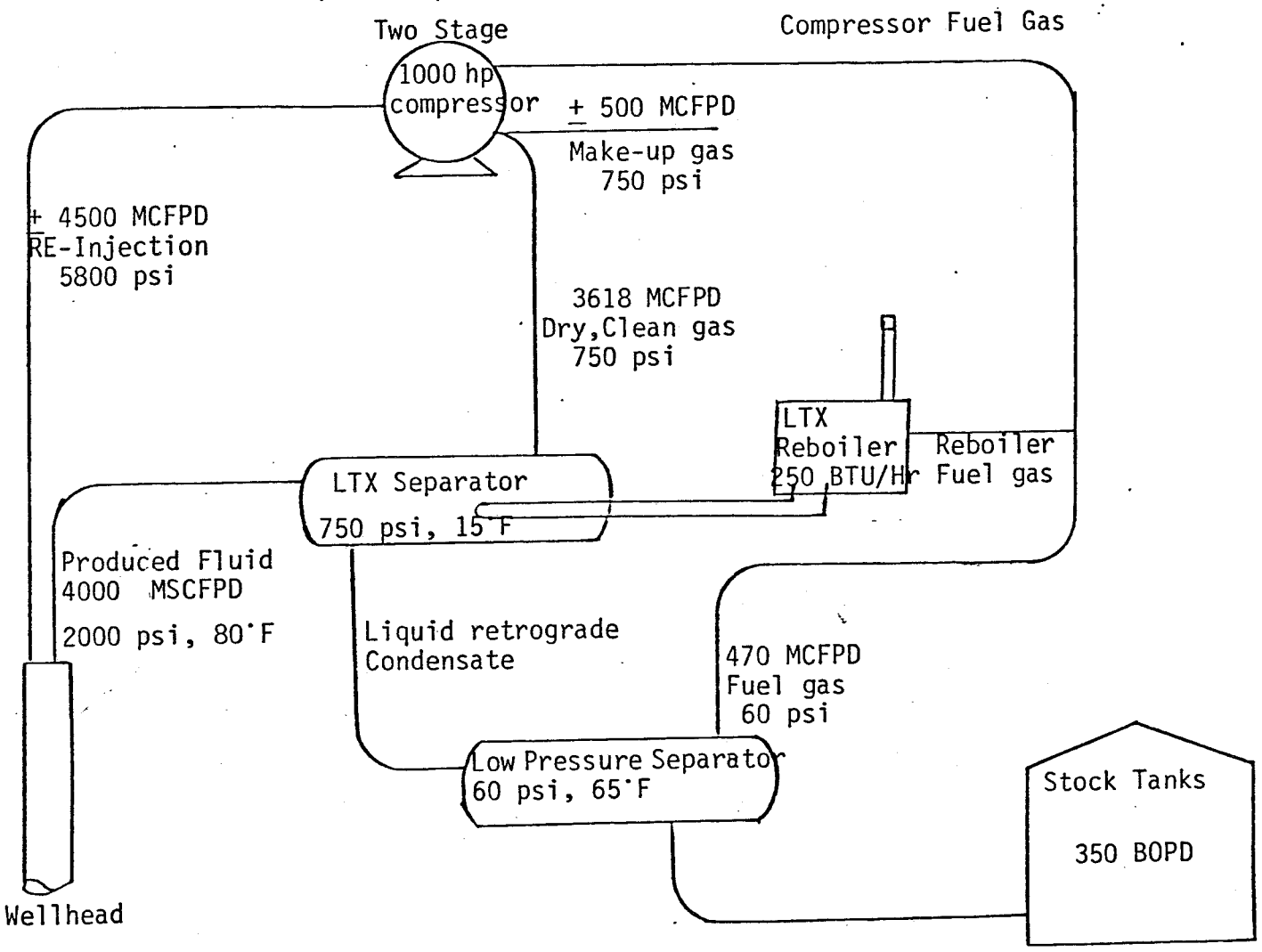


PS

## MECHANICAL SCHEMATIC FOR GAS INJECTION

LOGAN FEDERAL NO. 1
SE NE Sec. 26 – T3N – R7E
SUMMIT COUNTY, UTAH

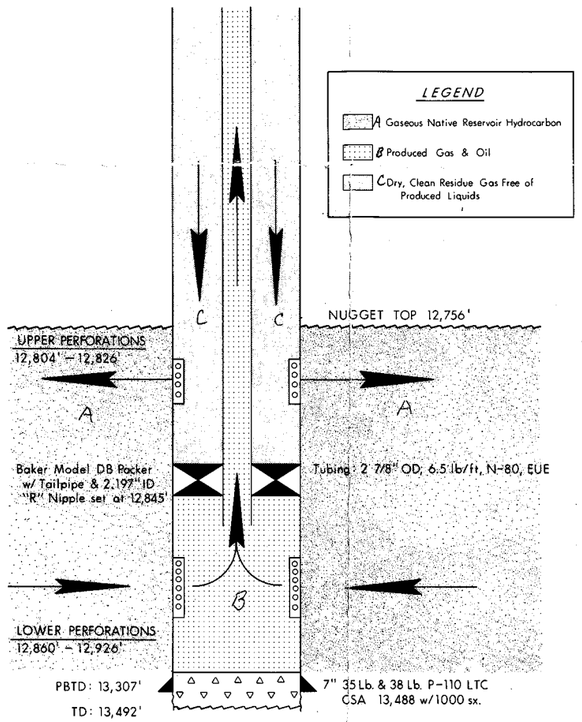


## MECHANICAL SCHEMATIC FOR GAS INJECTION

RYCKMAN CREEK WI UNIT
WELL No. 2
NW SW Sec. 18, T17N-R118W

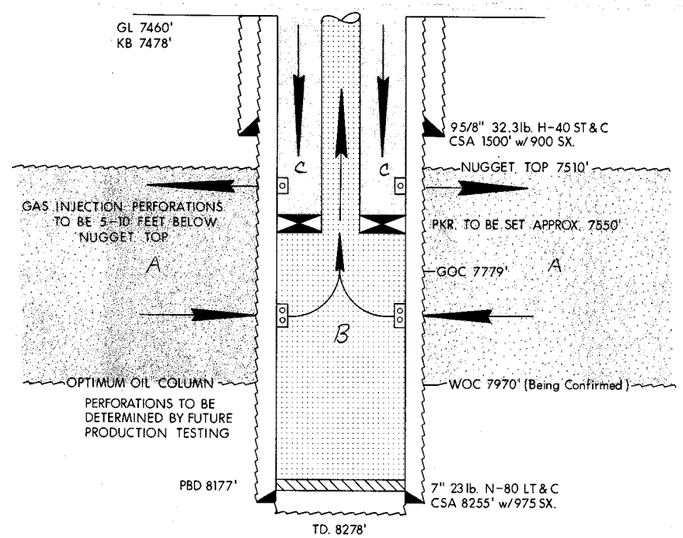


## MECHANICAL SCHEMATIC FOR GAS INJECTION

PAINTER RESERVOIR UNIT
PARTICIPATING AREA "A"
UINTA COUNTY, WYOMING
(PAINTER, EAST PAINTER & CLEAR CREEK)

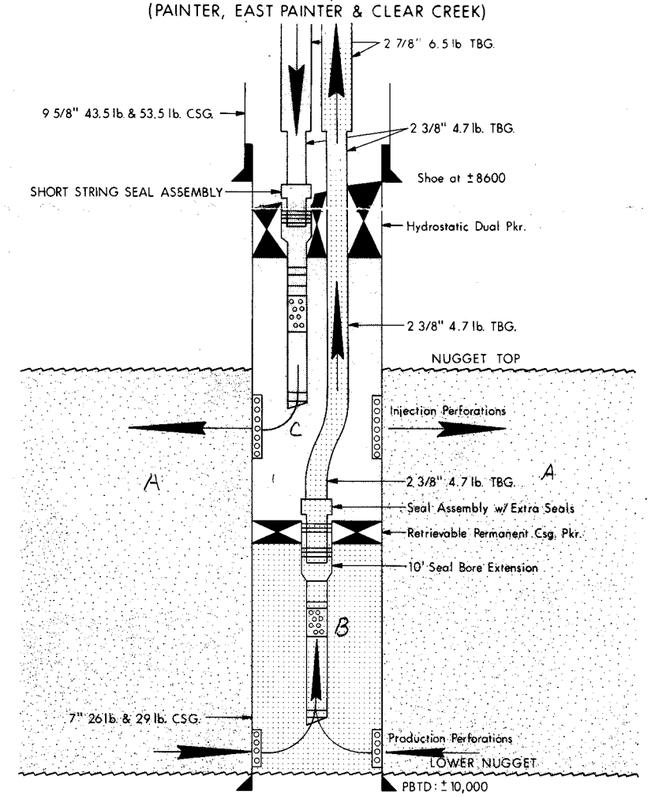


DAVIS OIL COMPANY

# NORTH PINEVIEW

SUMMIT COUNTY, UTAH

Exhibit No. 11
Cause No. 203-1

10/28/82

champlin

A Subsidiary of
Union Pacific Corporation

Albert L. Valentine
Unitization and
Regulatory Manager
Denver Region

Mr. Cleon B. Feight, Director
Utah Division of Oil, Gas and Mining
4241 State Office Building
Salt Lake City, UT 84114

December 10, 1982

File: HDM-271-986.511

RE: Cause No. UIC-012
Application by Davis Oil Company for administrative approval to convert to a gas injection well the Logan Federal Well #1, Section 26, Township 3 North, Range 7 East, Summit County, Utah

Dear Mr. Feight:

Champlin Petroleum Company (Champlin) objects to the above-referenced application by Davis Oil Company (Davis). As an interest owner in lands that will be affected by gas injection, Champlin requests that this matter be set for hearing before the Division.

The application by Davis does not provide specifics concerning the gas injection proposed, and Champlin is very much concerned that no action should be taken that could cause damage to this retrograde gas reservoir. Therefore, Champlin believes that all parties potentially affected by the proposed injection of gas, as well as the Division, should be fully informed with respect to the injection plan proposed by Davis; and further, that any objections to said plan of injection should be heard and considered by the Division. In addition, Champlin believes that any injection plan will impact the correlative rights of parties owning interests in the reservoir and therefore, should be conducted only pursuant to an agreed upon Plan of Unit Development approved by the Division.

A copy of this letter has been sent to the interested owners shown on the attached mailing list.

Sincerely,

A. L. Valentine

:kh

cc: J. D. Henry
F. McAtee

Attachment

RECEIVED
DEC 15 1982
DIVISION OF
OIL GAS & MINING

Champlin Petroleum Company
Denver Region
P.O. Box 1257
Englewood, Colorado 80111
303/779-2520

Mailing List
Working Interest Owners
Within
Chalk Creek Area

American Quasar Petroleum Co.
1700 Broadway, Suite 707
Denver, CO 80290

R. B. Giles
Amoco Production Company
1670 Broadway
Denver, CO 80202

John D. Haley
The Anschutz Corporation
555 17th Street, Suite 2400
Denver CO 80202

Vernon Hill
Cities Service Company
1600 Broadway, Suite 900
Denver, CO 80202

R. L. Hocker
Cities Service Company
P. O. Box 300
Tulsa, OK 74102

Conquest Exploration
P. O. Box 4512
Houston, TX 77210

Davis Oil Company
410 17th Street, Suite 1400
Denver, CO 80202

Deca Energy Corp.
410 17th Street, Suite 2210
Denver, CO 80202

El Paso Natural Gas Corp.
P. O. Box 990
Farmington, NM 87401

Energetics, Inc.
102 Inverness Terrace East
Englewood, CO 80112

Kennedy 7 Mitchell, Inc.
3190 S. Wadsworth Blvd.
P. O. Box 27-D
Denver, CO 80227

North Central Oil Corp.
600 Savoy Dune, Suite 600
Houston, TX 77036

Shell Oil Company
Rocky Mountain Division
Production
P. O. Box 831
Houston, TX 77001

Patricia A. Moore
Sun Production Company
Campbell Centre II
P. O. Box 2880
Dallas, TX 75221

LAW OFFICES
PRUITT, GUSHEE & FLETCHER
SUITE 1850 BENEFICIAL LIFE TOWER
SALT LAKE CITY, UTAH 84111
(801) 531-8446

ROBERT G. PRUITT, JR.
OLIVER W. GUSHEE, JR.
F. ALAN FLETCHER
RICHARD B. JOHNS
ROBERT G. PRUITT, III
LAWRENCE S. SKIFFINGTON
THOMAS W. BACHTELL

**COPY**

December 23, 1982

Amoco Production Company
Attn: R. B. Giles
17th and Broadway
Denver, CO 80202

American Quasar Petroleum Company
Attn: Frank McWilliams
1700 Broadway, Suite 707
Denver, CO 80290

The Anschutz Corporation
Attn: Michael A. Stead, Production Manager
2400 Anaconda Tower
555 17th Street
Denver, CO 80202

Champlin Petroleum Company
Attn: Kevin Sulley
P.O. Box 1257
Englewood, CO 80150

Re: Davis Oil Company Injection Appl. (UIC-012)
Logan Fed. #1 Well
Summit County, Utah

Gentlemen:

On behalf of Davis Oil Company I wish to advise you that the Gas Well Injection Application filed by Davis Oil Company for the Logan Fed. #1 Well in Section 26, Township 3 North, Range 7 East, in Summit County, Utah (Utah Board of Oil, Gas and Mining Cause No. UIC-012) has been withdrawn, and the hearing before the Board of Oil, Gas and Mining scheduled for December 30, 1982, will not be held on that date.

Davis Oil Company intends to amend the Application and refile it, at which time a complete copy of the Well Injection Application will be sent to you for your review and response. In the meantime, if you have any questions, please feel free to telephone or write me for an immediate response.

Yours very truly,

Robert G. Pruitt, Jr.

RGP:cjv
cc: Utah Division of Oil, Gas and Mining
Davis Oil Company

LAW OFFICES
PRUITT, GUSHEE & FLETCHER
SUITE 1850 BENEFICIAL LIFE TOWER
SALT LAKE CITY, UTAH 84111
(801) 531-8446

ROBERT G. PRUITT, JR.
OLIVER W. GUSHEE, JR.
F. ALAN FLETCHER
RICHARD B. JOHNS
ROBERT G. PRUITT, III
LAWRENCE S. SKIFFINGTON
THOMAS W. BACHTELL

RECEIVED
DEC 27 1982
DIVISION OF
OIL, GAS & MINING

December 23, 1982

Cleon B. Feight, Director
Utah Division of Oil, Gas
and Mining
4241 State Office Building
Salt Lake City, UT 84114

Re: Injection Well Application
(UIC-012)

Dear Jack:

Davis Oil Company has instructed me to withdraw their application in Cause No. UIC-012, filed with the Division on November 21, 1982, and scheduled for a hearing before the Board of Oil, Gas and Mining on December 30, 1982. This action should cancel the hearing of Cause UIC-012 scheduled for December 30.

Davis plans to amend its application to meet certain concerns expressed by the parties responding to the Division's Notice. It seems that most of the objections raised to the Davis application stem from the abbreviated form of Notice sent by the Division, which did not contain specifics or details of concern to the responding parties. Davis has attempted to communicate with each of the objecting parties and determine their individual objections or concerns. Davis plans to review and revise its application in order to specifically meet all legitimate concerns. When the application is refiled with the Division, Davis intends to send a complete copy of the application to each interested party for its review and comments. By this means Davis hopes to satisfy all legitimate concerns without resort to a full hearing.

Davis Oil Company is very anxious to avoid another technical squabble before the Board. This can best be accomplished by communication and cooperation among all of the interested parties. The Company does not intend to proceed further with arrangements to order or install any injection equipment until all legitimate concerns of the interested parties have been met, or until all reasonable efforts to resolve disputes have been exhausted. I hope this plan of action meets with your full approval.

By letter to each of the responding parties (see enclosed sample copy), I am notifying each of them that the hearing has been cancelled and will be rescheduled at a later date.

Yours very truly,

Robert G. Pruitt, Jr.

RGP:cjv
Enclosure
cc: Herm Olsen, Esq.
Davis Oil Company

Reservoir Fluid Study

DAVIS OIL COMPANY
Logan Federal No. 1 Well
Pineview Field
Summit County, Utah

RFL 840167

7501 STEMMONS FREEWAY, BO 347, DALLAS, TEXAS 75247 • 214/631-8270

CORE LABORATORIES, INC.

April 23, 1984

P. L. Moses
Manager
Reservoir Fluid Analysis

Davis Oil Company
410-17th Street, Suite 1400
Denver, CO 80202

Attention: Mr. R. E. Blaylock

Subject: Reservoir Fluid Study
Logan Federal No. 1 Well
Pineview Field
Summit County, Utah
RFL 840167

Gentlemen:

Samples of separator gas and condensate were collected from the subject well by a representative of Core Laboratories, Inc. during a production test occurring on February 22, 1984. These samples were brought to our Dallas laboratory for use in a reservoir fluid study and the results of this study are presented in the following report.

As a quality check, the opening pressure of each separator gas sample was measured in the laboratory and the room temperature bubble point pressure was determined for three of the six separator liquid samples. A summary of these preliminary measurements may be found on page two.

The hydrocarbon composition of the separator gas was measured through heptanes plus by routine gas chromatography. The compositional analysis of the separator liquid was conducted through hexanes by low temperature fractional distillation. At the conclusion of this distillation, the physical properties of the heptanes plus residue fraction were determined. The heptanes plus fraction of the separator liquid sample was also subjected to temperature programmed chromatographic analysis through eicosanes plus. The results of this extended compositional analysis may be found on page four. After correcting the separator gas production rate for the factors shown on page one, the producing gas/liquid ratio was calculated to be 9093 cubic feet of separator gas at 15.025 psia and 60°F. per barrel of stock tank liquid at 60°F. The shrinkage of the separator liquid to stock tank conditions was measured in the laboratory and the producing gas/liquid ratio was found to be equivalent to 6726 standard cubic feet of separator gas per barrel of separator liquid at 700 psig and 70°F. This gas/liquid ratio was used in conjunction with the measured hydrocarbon compositions of the separator products to calculate the hydrocarbon composition of the producing well stream material. All of the aforementioned compositional data may be found on page three. The separator gas and liquid samples were then physically recombined at their producing gas/liquid ratio and the resulting fluid was used for the entire study.

A small portion of the recombined sample was charged to a high pressure visual cell at the reported reservoir temperature of 225°F. During a constant composition expansion at this temperature, a retrograde dew point was observed at 4863 psig. The results of the pressure-volume measurements at the reservoir temperature are presented on page five, along with the deviation factor measurements at the dew point pressure and above.

The reservoir fluid was then subjected to constant volume depletion at the reservoir temperature. After determining the saturated sample volume, a series of expansions and constant pressure displacements were made, with each displacement terminating at the original saturated volume. Each displaced well stream was charged to low temperature fractional distillation equipment for compositional analysis, deviation factor measurement and determination of the produced volume. At the conclusion of the constant volume depletion, the hydrocarbon composition of the 700 psig equilibrium liquid phase was also measured. A summary of the data derived during the constant volume depletion at the reservoir temperature is presented on page six.

The smooth well stream compositions were then used with published equilibrium ratios to calculate the cumulative and instantaneous surface recoveries that may be expected during pressure depletion of the reservoir. The cumulative surface recovery calculations are based upon one MMSCF of original fluid and they are presented on page seven. A summary of the instantaneous surface recovery calculations is given on page eight.

Visual measurements of the retrograde condensate were performed at several points during the constant composition expansion and at each point during the constant volume depletion at the reservoir temperature. The maximum observed volume of retrograde condensate was 9.7 percent of the hydrocarbon pore space. A tabulation of the retrograde liquid measurements may be found on page nine; a graphical interpretation of these data is given on page fourteen.

It has been our pleasure to perform this reservoir fluid study for Davis Oil Company. Should you have any questions or comments regarding these data or if we may be of further service in any way, please do not hesitate to call upon us.

Very truly yours,

CORE LABORATORIES, INC.

James R. Fortner

James R. Fortner
Area Manager
Reservoir Fluid Analysis

JRF:mc
Distribution Attached

DISTRIBUTION LIST
WORKING INTEREST OWNERS
CHALK CREEK (NORTH PINEVIEW) FIELD
SUMMIT COUNTY, UTAH

| | |
|---|---|
| 1 Copy | Champlin Petroleum Co.<br>Frank D. McAtee<br>P. O. Box 1257<br>Englewood, CO 80150 |
| 1 Copy | American Quasar Petroleum Co.<br>Connie L. Wilson<br>2500 Ft. Worth National Bank Bldg.<br>Ft. Worth, TX 76102 |
| 1 Copy | Dece Energy Corp.<br>410 17th Street<br>Suite 2210<br>Denver, CO 80202 |
| 3 Copies | Davis Oil Company<br>410 17th Street<br>Suite 1400<br>Denver, CO 80202 |
| 1 Copy | The Anschutz Corp.<br>Jack Haley<br>2400 Anaconda Tower<br>555 Seventeenth St.<br>Denver, CO 80202 |
| 1 Copy | Amoco Production Company<br>C. A. Wood<br>Denver Region<br>1670 Broadway<br>Denver, CO 80202 |
| 1 Copy | Kennedy & Mitchell, Inc.<br>7400 West Jefferson Ave.<br>Denver, CO 80235 |
| 1 Copy | Bill D. Farleigh<br>P. O. Box 3215<br>Casper, WY 82602 |
| 1 Copy | Shell Oil Company<br>1700 Broadway<br>Denver, CO 80290 |
| 1 Copy | Sun Production Company<br>P. O. Box 2880<br>Dallas, TX 75221 |

DISTRIBUTION LIST CON'T.
WORKING INTEREST OWNERS
CHALK CREEK (NORTH PINEVIEW) FIELD
SUMMIT COUNTY, UTAH

| | |
|---|---|
| 1 Copy | Conquest Exploration Co.<br>4201 FM 1960 W.<br>Suite 500<br>Houston, TX 77068 |
| 1 Copy | A & E Investment Inc.<br>151 Farmington Ave.<br>Hartford, CN 06156 |
| 1 Copy | Century Chartering<br>650 5th Ave.<br>Peter Ryan<br>New York, NY 10019 |
| 1 Copy | El Paso Exploration Co.<br>3535 East 30th St.<br>Farmington, NM 87401 |
| 1 Copy | Canadian-American Res.<br>2500 Ft. Worth Nat'l Bank Bldg.<br>Ft. Worth, TX 76102 |
| 1 Copy | Sandefer Oil & Gas Inc.<br>G. Talkington<br>First City Tower<br>1001 Fannin Ste. 2300<br>Houston, TX 77002 |
| 1 Copy | State of Utah<br>Nat'l. Res. & Energy<br>Oil & Gas, & Mining<br>Ronald J. Firth<br>4241 State Office Bldg.<br>Salt Lake City, UT 84114 |
| 1 Copy | USGS<br>745 W. 1700 S<br>Rm. 2000<br>Administration Bldg.<br>Salt Lake City, UT 84104 |

**CORE LABORATORIES, INC.**
*Reservoir Fluid Analysis*



File RFL 840167

Company Davis Oil Company
Date Sampled February 22, 1984
Well Logan Federal No. 1
County Summit
Field Pineview
State Utah

## FORMATION CHARACTERISTICS

| | | |
|---|---|---|
| Formation Name | | |
| Date First Well Completed | | |
| Original Reservoir Pressure | PSIG @ | Ft. |
| Original Produced Gas/Liquid Ratio | | SCF/Bbl |
| Production Rate | | Bbls/Day |
| Separator Pressure and Temperature | PSIG | °F. |
| Liquid Gravity at 60°F. | | °API |
| Datum | | Ft. Subsea |

## WELL CHARACTERISTICS

| | | |
|---|---|---|
| Elevation | | Ft. |
| Total Depth | | Ft. |
| Producing Interval | 12804-12926 | Ft. |
| Tubing Size and Depth | In. to | Ft. |
| Open Flow Potential | | MMSCF/Day |
| Last Reservoir Pressure | 4947 PSIG @ 12865 | Ft. |
| Date | | |
| Reservoir Temperature | 225 °F. @ | Ft. |
| Status of Well | Shut in | |
| Pressure Gauge | | |

## SAMPLING CONDITIONS

| | | |
|---|---|---|
| Flowing Tubing Pressure | 2742 | PSIG |
| Flowing Bottom Hole Pressure | | PSIG |
| Primary Separator Pressure | 700 | PSIG |
| Primary Separator Temperature | 70 | °F. |
| Secondary Separator Pressure | | PSIG |
| Secondary Separator Temperature | | °F. |
| Field Stock Tank Liquid Gravity | 54.8 | °API @ 60°F. |
| Primary Separator Gas Production Rate | 2624.11 | MSCF/Day |
| Pressure Base | 15.025 PSIA | |
| Temperature Base | 60 °F. | |
| Compressibility Factor ($F_{pv}$) | 1.0727 | |
| Gas Gravity (Laboratory) | 0.698 | |
| Gas Gravity Factor ($F_g$) | 1.1969 | |
| Stock Tank Liquid Production Rate @ 60°F. | 288.6 | Bbls/Day |
| Primary Separator Gas/Stock Tank Liquid Ratio | 9093 | SCF/Bbl |
| or | 110.0 | Bbls/MMSCF |
| Sampled by | Core Laboratories, Inc. | |

REMARKS:

These analyses, opinions or interpretations are based on observations and material supplied by the client to whom, and for whose exclusive and confidential use, this report is made. The interpretations or opinions expressed represent the best judgement of Core Laboratories, Inc. (all errors and omissions excepted); but Core Laboratories, Inc. and its officers and employees, assume no responsibility and make no warranty or representations as to the productivity, proper operation, or profitableness of any oil, gas or other mineral well or sand in connection with which such report is used or relied upon.

File RFL 840167

Well Logan Federal No. 1

## SUMMARY OF SAMPLES RECEIVED IN LABORATORY

### Separator Gas

| Cylinder Number | Separator Conditions: Pressure, PSIG | Separator Conditions: Temperature, °F. | Laboratory Opening Conditions: Pressure, PSIG | Laboratory Opening Conditions: Temperature, °F. |
|---|---|---|---|---|
| 193455 | 700 | 70 | 820 | 72 |
| 193439 | 700 | 70 | 820 | 72 |
| 193484 | 700 | 70 | 575 | 72 |
| 193530* | 700 | 70 | 820 | 72 |
| 193466 | 700 | 70 | 760 | 72 |
| 193441 | 700 | 70 | 830 | 72 |

### Separator Liquid

| Cylinder Number | Separator Conditions: Pressure, PSIG | Separator Conditions: Temperature, °F. | Laboratory Bubble Point Pressure: Pressure, PSIG | Laboratory Bubble Point Pressure: Temperature, °F. |
|---|---|---|---|---|
| 188477 | 700 | 70 | 726 | 76 |
| 188498* | 700 | 70 | 724 | 76 |
| 188525 | 700 | 70 | 728 | 75 |
| 188483 | 700 | 70 | | |
| 188518 | 700 | 70 | | |
| 188547 | 700 | 70 | | |

*Samples used for the reservoir fluid analysis.

These analyses, opinions or interpretations are based on observations and material supplied by the client to whom, and for whose exclusive and confidential use, this report is made. The interpretations or opinions expressed represent the best judgement of Core Laboratories, Inc. (all errors and omissions excepted); but Core Laboratories, Inc. and its officers and employees, assume no responsibility and make no warranty or representations as to the produc-

File RFL 840167

Well Logan Federal No. 1

## HYDROCARBON ANALYSES OF SEPARATOR PRODUCTS AND CALCULATED WELL STREAM

| Component | Separator Liquid, Mol Percent | Separator Gas Mol Percent | Separator Gas GPM | Well Stream Mol Percent | Well Stream GPM |
|---|---|---|---|---|---|
| Hydrogen Sulfide | 0.00 | 0.00 | | 0.00 | |
| Carbon Dioxide | 0.45 | 0.87 | | 0.81 | |
| Nitrogen | 0.14 | 2.47 | | 2.14 | |
| Methane | 19.05 | 79.78 | | 71.29 | |
| Ethane | 12.05 | 10.85 | 2.959 | 11.02 | 3.005 |
| Propane | 12.34 | 4.00 | 1.123 | 5.17 | 1.451 |
| iso-Butane | 4.02 | 0.66 | 0.220 | 1.13 | 0.377 |
| n-Butane | 6.23 | 0.76 | 0.244 | 1.52 | 0.489 |
| iso-Pentane | 3.28 | 0.20 | 0.075 | 0.63 | 0.235 |
| n-Pentane | 3.20 | 0.15 | 0.056 | 0.58 | 0.214 |
| Hexanes | 4.87 | 0.10 | 0.042 | 0.77 | 0.320 |
| Heptanes plus | 34.37 | 0.16 | 0.074 | 4.94 | 2.933 |
| | 100.00 | 100.00 | 4.793 | 100.00 | 9.024 |

| Properties of Heptanes plus | | | |
|---|---|---|---|
| API gravity @ 60°F. | 45.1 | | |
| Density, Gm/Cc @ 60°F. | 0.8003 | | 0.799 |
| Molecular weight | 148 | 103 | 147 |

Calculated separator gas gravity (air=1.000) = 0.698
Calculated gross heating value for separator gas = 1199 BTU per cubic foot of dry gas @ 15.025 psia and 60°F.

Primary separator gas collected @ 700 psig and 70°F.
Primary separator liquid collected @ 700 psig and 70°F.

Primary separator gas/separator liquid ratio = 6726 SCF/Bbl @ 70°F.
Primary separator liquid/stock tank liquid ratio = 1.352 Bbls @ 70°F./Bbl
Primary separator gas/well stream ratio = 860.15 MSCF/MMSCF
Stock tank liquid/well stream ratio = 94.60 Bbls/MMSCF

These analyses, opinions or interpretations are based on observations and material supplied by the client to whom, and for whose exclusive and confidential use, this report is made. The interpretations or opinions expressed represent the best judgement of Core Laboratories, Inc. (all errors and omissions excepted); but Core Laboratories, Inc. and its officers and employees, assume no responsibility and make no warranty or representations as to the productivity, proper operation, or profitableness of any oil, gas or other mineral well or sand in connection with which such report is used or relied upon.

File RFL 840167

Well Logan Federal No. 1

## HYDROCARBON ANALYSIS OF HEPTANES PLUS FRACTION OF SEPARATOR LIQUID SAMPLE

| Component | Mol Percent | Weight Percent |
|---|---|---|
| iso-Butanes | 0.00 | 0.00 |
| n-Butanes | 0.03 | 0.01 |
| iso-Pentanes | 0.02 | 0.01 |
| n-Pentanes | 0.02 | 0.01 |
| Hexanes | 0.88 | 0.49 |
| Heptanes | 15.77 | 9.95 |
| Octanes | 24.35 | 17.13 |
| Nonanes | 14.09 | 11.21 |
| Decanes | 9.32 | 8.21 |
| Undecanes | 6.25 | 6.04 |
| Dodecanes | 4.47 | 4.73 |
| Tridecanes | 4.40 | 5.06 |
| Tetradecanes | 3.68 | 4.60 |
| Pentadecanes | 3.14 | 4.26 |
| Hexadecanes | 2.35 | 3.43 |
| Heptadecanes | 2.03 | 3.17 |
| Octadecanes | 2.02 | 3.33 |
| Nonadecanes | 1.59 | 2.75 |
| Eicosanes plus | 5.59 | 15.61 |
| | 100.00 | 100.00 |

These analyses, opinions or interpretations are based on observations and material supplied by the client to whom, and for whose exclusive and confidential use, this report is made. The interpretations or opinions expressed represent the best judgement of Core Laboratories, Inc. (all errors and omissions excepted); but Core Laboratories, Inc. and its officers and employees, assume no responsibility and make no warranty or representations as to the productivity, proper operation, or profitableness of any oil, gas or other mineral well or sand in connection with which such report is used or relied upon.

File RFL 840167

Well Logan Federal No. 1

## PRESSURE-VOLUME RELATIONS OF RESERVOIR FLUID AT 225°F.
## (Constant Composition Expansion)

| Pressure, PSIG | Relative Volume | Deviation Factor, Z |
|---|---|---|
| 6500 | 0.8839 | 1.159 |
| 6000 | 0.9116 | 1.103 |
| 5500 | 0.9451 | 1.049 |
| 5250 | 0.9647 | 1.022 |
| 5150 | 0.9733 | 1.012 |
| 5050 | 0.9821 | 1.001 |
| 4950 | 0.9919 | 0.991 |
| 4863 Dew Point | 1.0000 | 0.982* |
| 4800 | 1.0073 | |
| 4700 | 1.0181 | |
| 4550 | 1.0358 | |
| 4350 | 1.0633 | |
| 4100 | 1.1021 | |
| 3800 | 1.1599 | |
| 3500 | 1.2315 | |
| 3200 | 1.3209 | |
| 2900 | 1.4372 | |
| 2600 | 1.5884 | |
| 2300 | 1.7879 | |
| 2000 | 2.0593 | |
| 1700 | 2.4360 | |
| 1400 | 2.9903 | |
| 1200 | 3.5161 | |
| 1080 | 3.9409 | |
| 972 | 4.4059 | |

*Gas Expansion Factor = 1.410 MSCF/Bbl

These analyses, opinions or interpretations are based on observations and material supplied by the client to whom, and for whose exclusive and confidential use, this report is made. The interpretations or opinions expressed represent the best judgement of Core Laboratories, Inc. (all errors and omissions excepted); but Core Laboratories, Inc. and its officers and employees, assume no responsibility and make no warranty or representations as to the produc-

## DEPLETION STUDY AT 225°F.

### Hydrocarbon Analyses of Produced Well Stream - Mol Percent

| Component | Reservoir Pressure - PSIG 4863 | 4200 | 3500 | 2800 | 2100 | 1300 | 700 | 700* |
|---|---|---|---|---|---|---|---|---|
| Carbon Dioxide | 0.81 | 0.81 | 0.82 | 0.82 | 0.83 | 0.84 | 0.86 | 0.25 |
| Nitrogen | 2.14 | 2.24 | 2.25 | 2.26 | 2.26 | 2.24 | 2.20 | 0.16 |
| Methane | 71.29 | 72.28 | 73.39 | 74.31 | 74.91 | 74.75 | 74.01 | 12.24 |
| Ethane | 11.02 | 11.02 | 11.01 | 11.01 | 11.05 | 11.38 | 11.63 | 5.76 |
| Propane | 5.17 | 5.11 | 5.05 | 5.02 | 5.05 | 5.17 | 5.33 | 5.44 |
| iso-Butane | 1.13 | 1.09 | 1.06 | 1.05 | 1.05 | 1.09 | 1.15 | 1.93 |
| n-Butane | 1.52 | 1.46 | 1.42 | 1.40 | 1.40 | 1.44 | 1.52 | 2.97 |
| iso-Pentane | 0.63 | 0.59 | 0.56 | 0.54 | 0.53 | 0.55 | 0.59 | 2.05 |
| n-Pentane | 0.58 | 0.54 | 0.51 | 0.49 | 0.48 | 0.49 | 0.52 | 2.16 |
| Hexanes | 0.77 | 0.68 | 0.60 | 0.55 | 0.52 | 0.53 | 0.60 | 4.88 |
| Heptanes plus | 4.94 | 4.18 | 3.33 | 2.55 | 1.92 | 1.52 | 1.59 | 62.16 |
| | 100.00 | 100.00 | 100.00 | 100.00 | 100.00 | 100.00 | 100.00 | 100.00 |
| Molecular weight of heptanes plus | 147 | 134 | 126 | 120 | 115 | 111 | 109 | 168 |
| Density of heptanes plus | 0.799 | 0.787 | 0.779 | 0.773 | 0.767 | 0.763 | 0.760 | 0.811 |
| **Deviation Factor - Z** | | | | | | | | |
| Equilibrium gas | 0.982 | 0.919 | 0.886 | 0.871 | 0.875 | 0.902 | 0.943 | |
| Two-phase | 0.982 | 0.923 | 0.874 | 0.842 | 0.826 | 0.816 | 0.778 | |
| Well Stream produced- Cumulative percent of initial | 0.000 | 8.076 | 19.104 | 32.686 | 48.475 | 67.588 | 81.514 | |

*Equilibrium liquid phase.

These analyses, opinions or interpretations are based on observations and material supplied by the client to whom, and for whose exclusive and confidential use, this report is made. The interpretations or opinions expressed represent the best judgement of Core Laboratories, Inc. (all errors and omissions excepted); but Core Laboratories, Inc. and its officers and employees, assume no responsibility and make no warranty or representations as to the productivity, proper operation, or profitableness of any oil, gas or other mineral well or sand in connection with which such report is used or relied upon.

## CALCULATED CUMULATIVE RECOVERY DURING DEPLETION

| Cumulative Recovery per MMSCF of Original Fluid | Initial in Place | Reservoir Pressure - PSIG 4863 | 4200 | 3500 | 2800 | 2100 | 1300 | 700 |
|---|---|---|---|---|---|---|---|---|
| Well Stream - MSCF | 1000 | 0 | 80.76 | 191.04 | 326.86 | 484.75 | 675.88 | 815.14 |
| Normal Temperature Separation* | | | | | | | | |
| Stock Tank Liquid - Barrels | 91.58 | 0 | 5.99 | 12.40 | 18.49 | 23.97 | 29.49 | 33.38 |
| Primary Separator Gas-MSCF | 856.78 | 0 | 70.74 | 169.60 | 293.84 | 440.59 | 619.59 | 753.29 |
| Second Stage Gas - MSCF | 37.80 | 0 | 2.66 | 5.70 | 8.82 | 11.85 | 15.21 | 15.61 |
| Stock Tank Gas - MSCF | 29.47 | 0 | 2.11 | 4.62 | 7.30 | 10.04 | 13.25 | 14.52 |
| Total "Plant Products" in Primary Separator Gas-Gallons | | | | | | | | |
| Ethane | 2551 | 0 | 211 | 506 | 877 | 1317 | 1870 | 2301 |
| Propane | 949 | 0 | 80 | 194 | 342 | 523 | 751 | 944 |
| Butanes (total) | 360 | 0 | 31 | 76 | 137 | 214 | 314 | 411 |
| Pentanes plus | 147 | 0 | 12 | 31 | 55 | 86 | 127 | 174 |
| Total "Plant Products" in Second Stage Gas-Gallons | | | | | | | | |
| Ethane | 230 | 0 | 16 | 35 | 53 | 72 | 93 | 95 |
| Propane | 110 | 0 | 8 | 17 | 27 | 37 | 48 | 49 |
| Butanes (total) | 41 | 0 | 3 | 7 | 10 | 15 | 19 | 20 |
| Pentanes plus | 13 | 0 | 1 | 2 | 3 | 5 | 6 | 6 |
| Total "Plant Products" in Well Stream - Gallons | | | | | | | | |
| Ethane | 3005 | 0 | 243 | 574 | 982 | 1457 | 2051 | 2492 |
| Propane | 1451 | 0 | 116 | 272 | 463 | 687 | 964 | 1173 |
| Butanes (total) | 866 | 0 | 67 | 157 | 265 | 392 | 550 | 671 |
| Pentanes plus | 3702 | 0 | 242 | 505 | 762 | 1002 | 1254 | 1449 |

*Primary separator at 700 psig and 70°F., reduced to 300 psig for reservoir pressure below 1300 psig; second stage separator at 130 psig and 60°F.; stock tank at 0 psig and 60°F.

These analyses, opinions or interpretations are based on observations and material supplied by the client to whom, and for whose exclusive and confidential use, this report is made. The interpretations or opinions expressed represent the best judgement of Core Laboratories, Inc. (all errors and omissions excepted); but Core Laboratories, Inc. and its officers and employees, assume no responsibility and make no warranty or representations as to the productivity, proper operation, or profitableness of any oil, gas or other mineral well or sand in connection with which such report is used or relied upon.

## CALCULATED INSTANTANEOUS RECOVERY DURING DEPLETION

| | Reservoir Pressure - PSIG | | | | | | |
|---|---|---|---|---|---|---|---|
| | 4863 | 4200 | 3500 | 2800 | 2100 | 1300 | 700 |
| **Normal Temperature Separation*** | | | | | | | |
| Stock Tank Liquid Gravity, °API at 60°F. | 56.6 | 59.8 | 62.5 | 65.1 | 67.9 | 70.4 | 69.5 |
| Separator Gas/Well Stream Ratio, MSCF/MMSCF | | | | | | | |
| Primary Separator Gas Only | 856.78 | 875.92 | 896.42 | 914.80 | 929.43 | 936.55 | 960.05 |
| Primary and Second Stage Separator Gases | 894.58 | 908.79 | 924.05 | 937.71 | 948.62 | 954.14 | 962.92 |
| Separator Gas/Stock Tank Liquid Ratio, SCF/STB | | | | | | | |
| Primary Separator Gas Only | 9355 | 11811 | 15422 | 20393 | 26766 | 32438 | 34401 |
| Primary and Second Stage Separator Gases | 9768 | 12254 | 15897 | 20904 | 27319 | 33047 | 34504 |
| **GPM from Smooth Well Stream Compositions** | | | | | | | |
| Ethane plus | 9.024 | 8.271 | 7.615 | 7.100 | 6.751 | 6.701 | 6.937 |
| Propane plus | 6.019 | 5.266 | 4.612 | 4.098 | 3.738 | 3.597 | 3.766 |
| Butanes plus | 4.568 | 3.832 | 3.195 | 2.689 | 2.321 | 2.147 | 2.270 |
| Pentanes plus | 3.702 | 2.999 | 2.385 | 1.889 | 1.520 | 1.320 | 1.398 |

*Primary separator at 700 psig and 70°F., reduced to 300 psig for reservoir pressure below 1300 psig; second stage separator at 130 psig and 60°F.; stock tank at 0 psig and 60°F.

These analyses, opinions or interpretations are based on observations and material supplied by the client to whom, and for whose exclusive and confidential use, this report is made. The interpretations or opinions expressed represent the best judgement of Core Laboratories, Inc. (all errors and omissions excepted), but Core Laboratories, Inc. and its officers and employees, assume no responsibility and make no warranty or representations as to the productivity, proper operation, or profitableness of any oil, gas or other mineral well or sand in connection with which such report is used or relied upon.

CORE LABORATORIES, INC.
*Reservoir Fluid Analysis*



File RFL 840167

Well Logan Federal No. 1

## RETROGRADE CONDENSATION DURING GAS DEPLETION AT 225°F.

| Pressure, PSIG | Retrograde Liquid Volume, Percent of Hydrocarbon Pore Space |
|---|---|
| 4863 Dew Point | 0.0 |
| 4800 | 0.1 |
| 4700 | 0.3 |
| 4550 | 0.7 |
| 4350 | 1.6 |
| 4200 | 2.6 |
| 3500 | 6.6 |
| 2800 | 8.8 |
| 2100 | 9.7 |
| 1300 | 9.7 |
| 700 | 8.9 |
| 0 | 7.2 |

pressure support

> 4863*

(water drive)

primary recovery = 47% >

5/24/84

GAS > Crit. press
Dew pt.

size:
1 Full pressure maintenance = 85%
Partial pressure maintenance = 58% >
47% >

Evaluate:
1 size > incremental rec.
2 costs

OGIP = 19.4 BCF above G/W contact.
OCIP =

Pressure maintenance
Nitrogen only

These analyses, opinions or interpretations are based on observations and material supplied by the client to whom, and for whose exclusive and confidential use, this report is made. The interpretations or opinions expressed represent the best judgement of Core Laboratories, Inc. (all errors and omissions excepted); but Core Laboratories, Inc. and its officers and employees, assume no responsibility and make no warranty or representations as to the productivity, proper operation, or profitableness of any oil, gas or other mineral well or sand in connection with which such report is used or relied upon.

# DEVIATION FACTOR Z OF WELL STREAM DURING DEPLETION AT 225°F.

Company DAVIS OIL COMPANY Formation
Well LOGAN FEDERAL NO. 1 County SUMMIT
Field PINEVIEW State UTAH

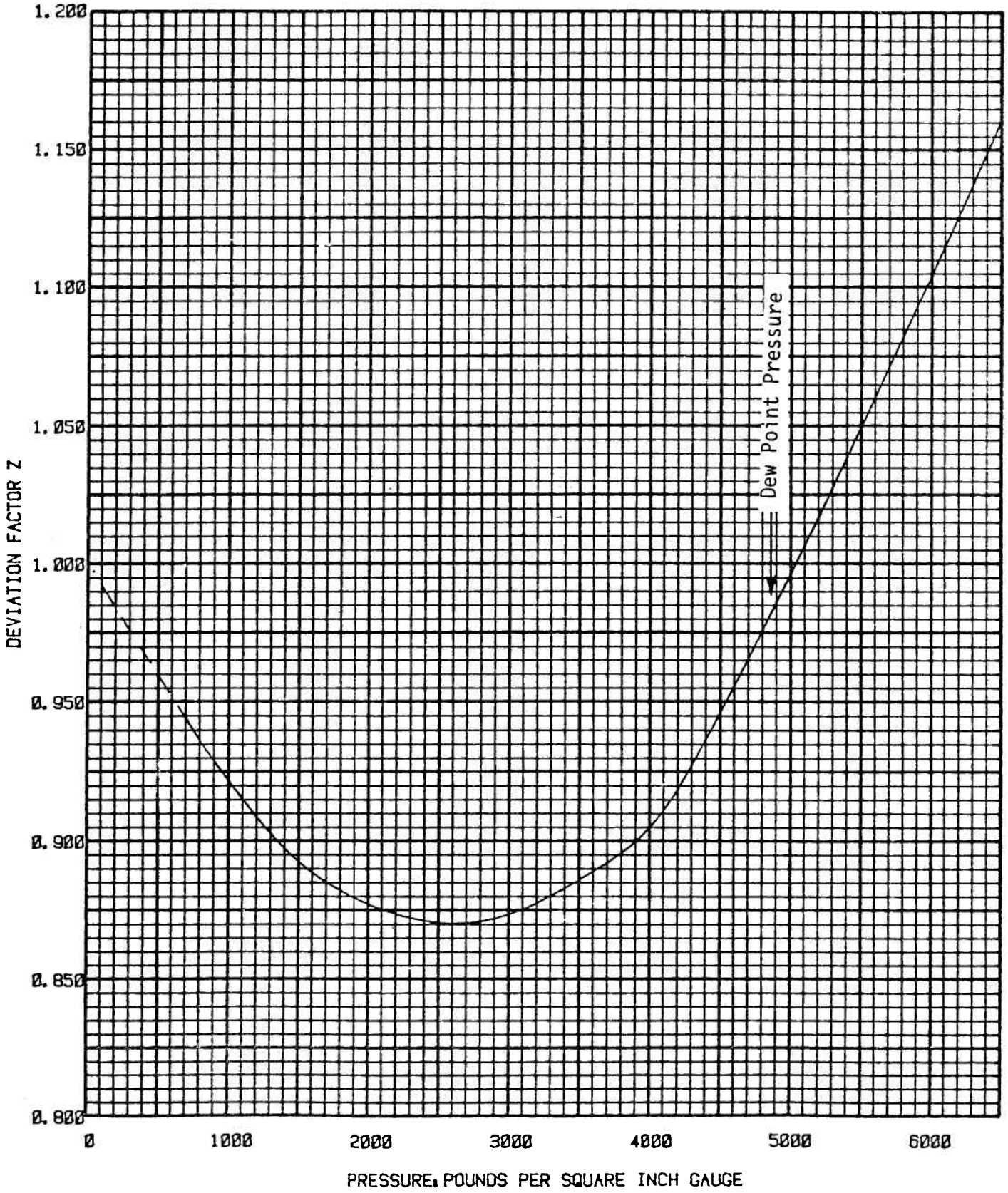

File RFL 840167

**CORE LABORATORIES, INC.**
*Petroleum Reservoir Engineering*
DALLAS, TEXAS

VOLUME OF WELL STREAM PRODUCED DURING DEPLETION

Company DAVIS OIL COMPANY
Formation
Well LOGAN FEDERAL NO. 1
County SUMMIT
Field PINEVIEW
State UTAH

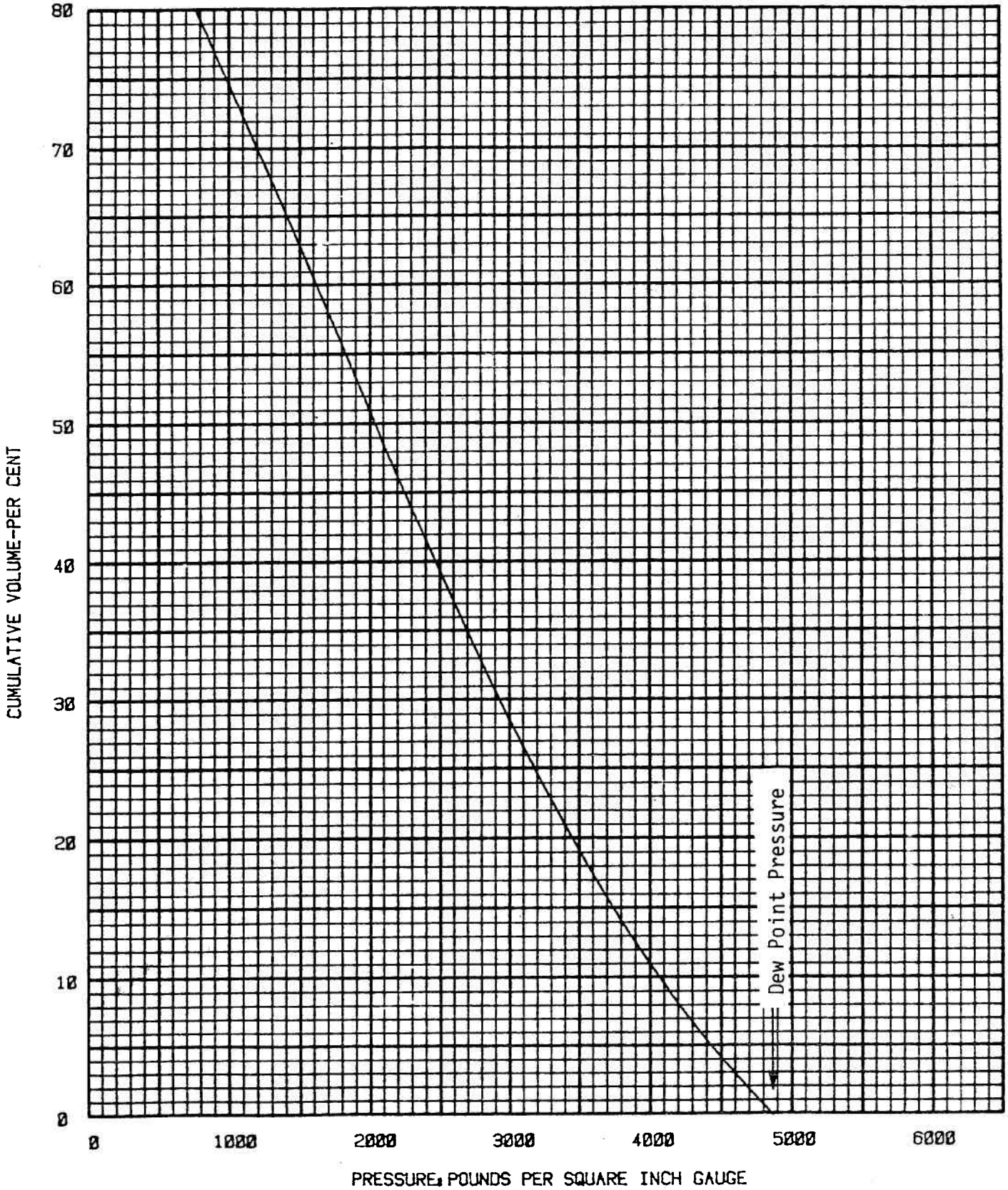

File RFL 840167

**CORE LABORATORIES, INC.**
*Petroleum Reservoir Engineering*
DALLAS, TEXAS

## CUMULATIVE RECOVERY DURING DEPLETION

Company DAVIS OIL COMPANY
Formation
Well LOGAN FEDERAL NO. 1
County SUMMIT
Field PINEVIEW
State UTAH

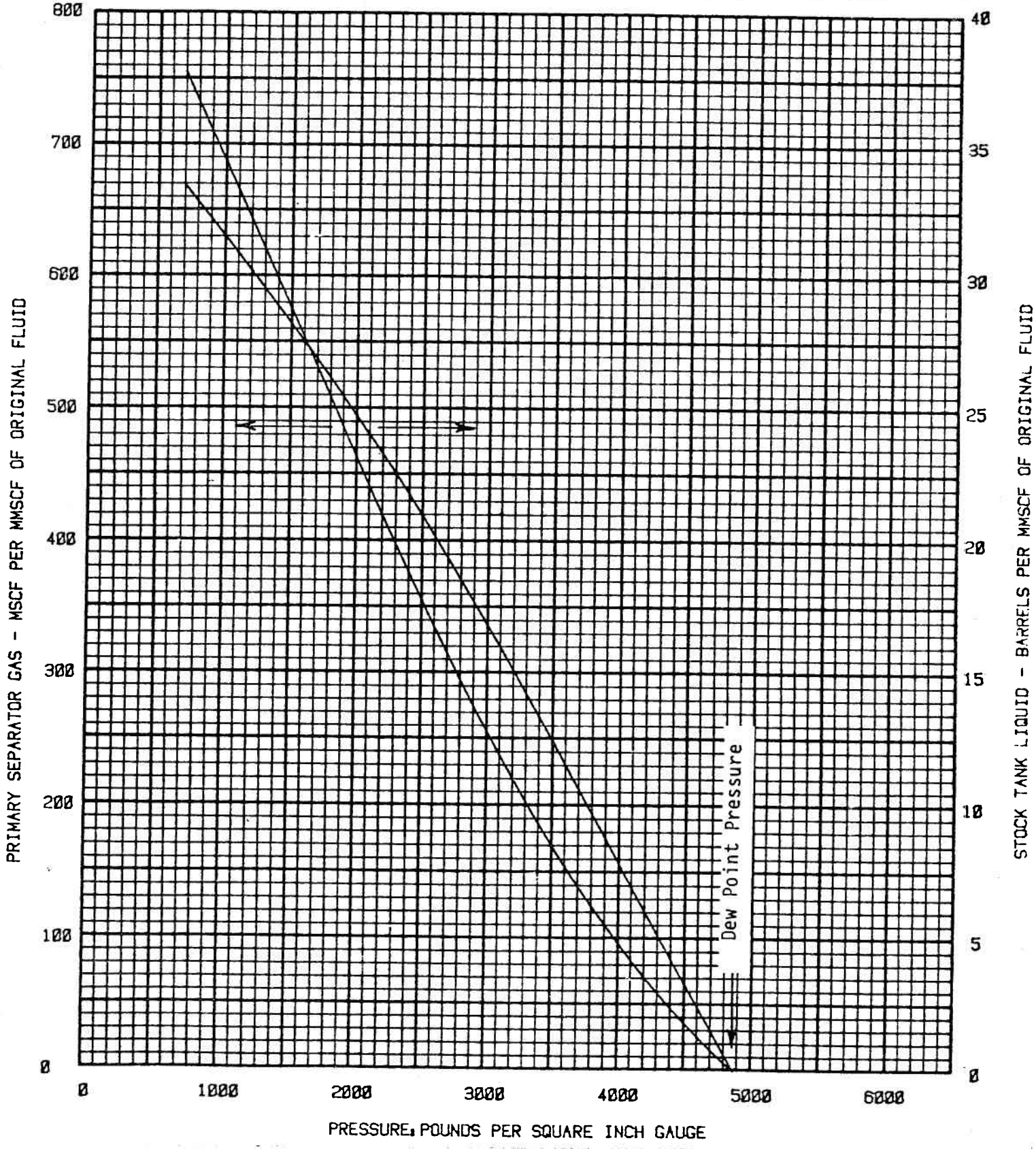

# CUMULATIVE RECOVERY-PLANT PRODUCTS IN PRIMARY SEPARATOR GAS

Company DAVIS OIL COMPANY
Formation
Well LOGAN FEDERAL NO. 1
County SUMMIT
Field PINEVIEW
State UTAH

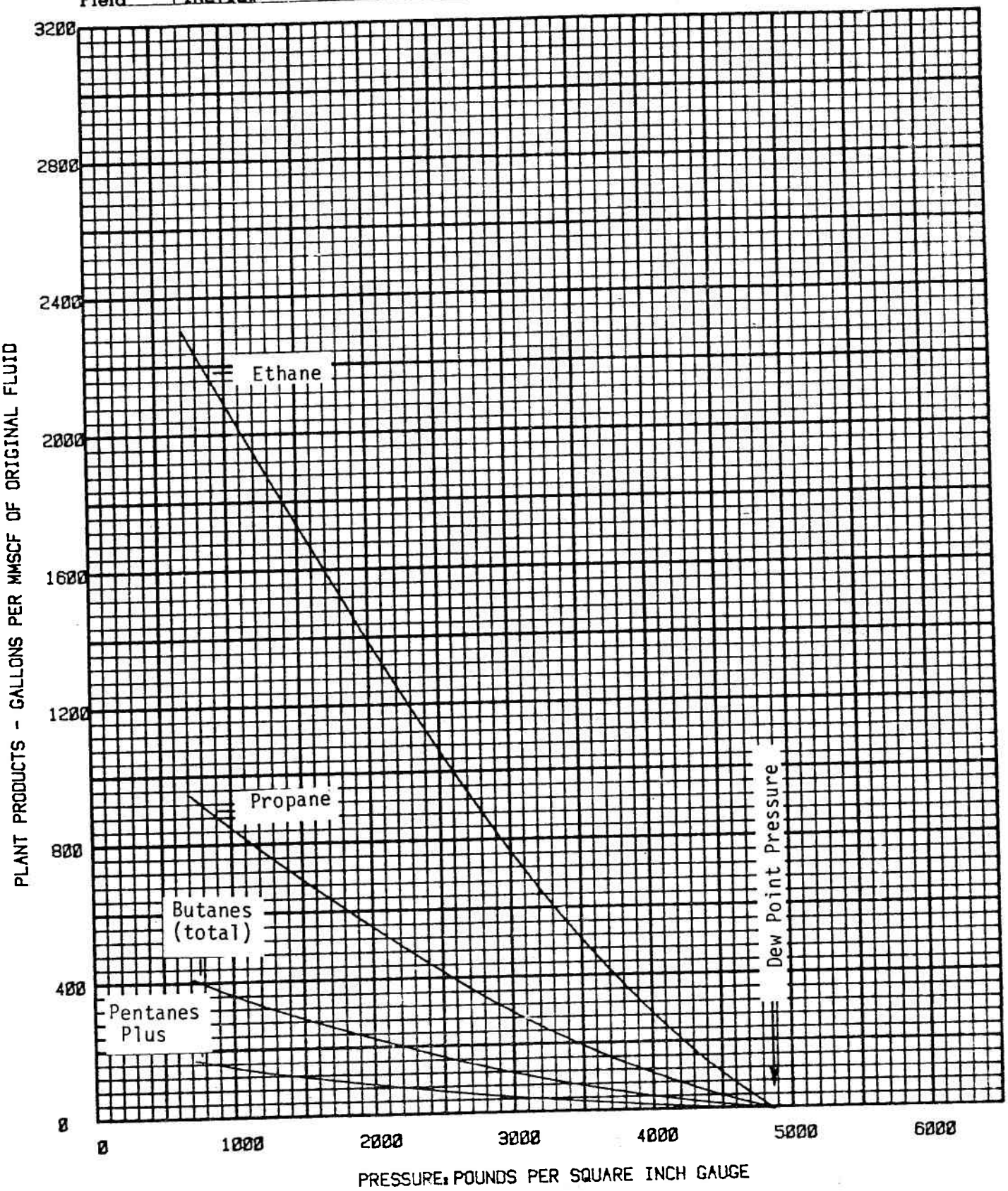

File RFL 840167

**CORE LABORATORIES, INC.**
*Petroleum Reservoir Engineering*
DALLAS, TEXAS

RETROGRADE CONDENSATION DURING DEPLETION

Company DAVIS OIL COMPANY Formation
Well LOGAN FEDERAL NO. 1 County SUMMIT
Field PINEVIEW State UTAH

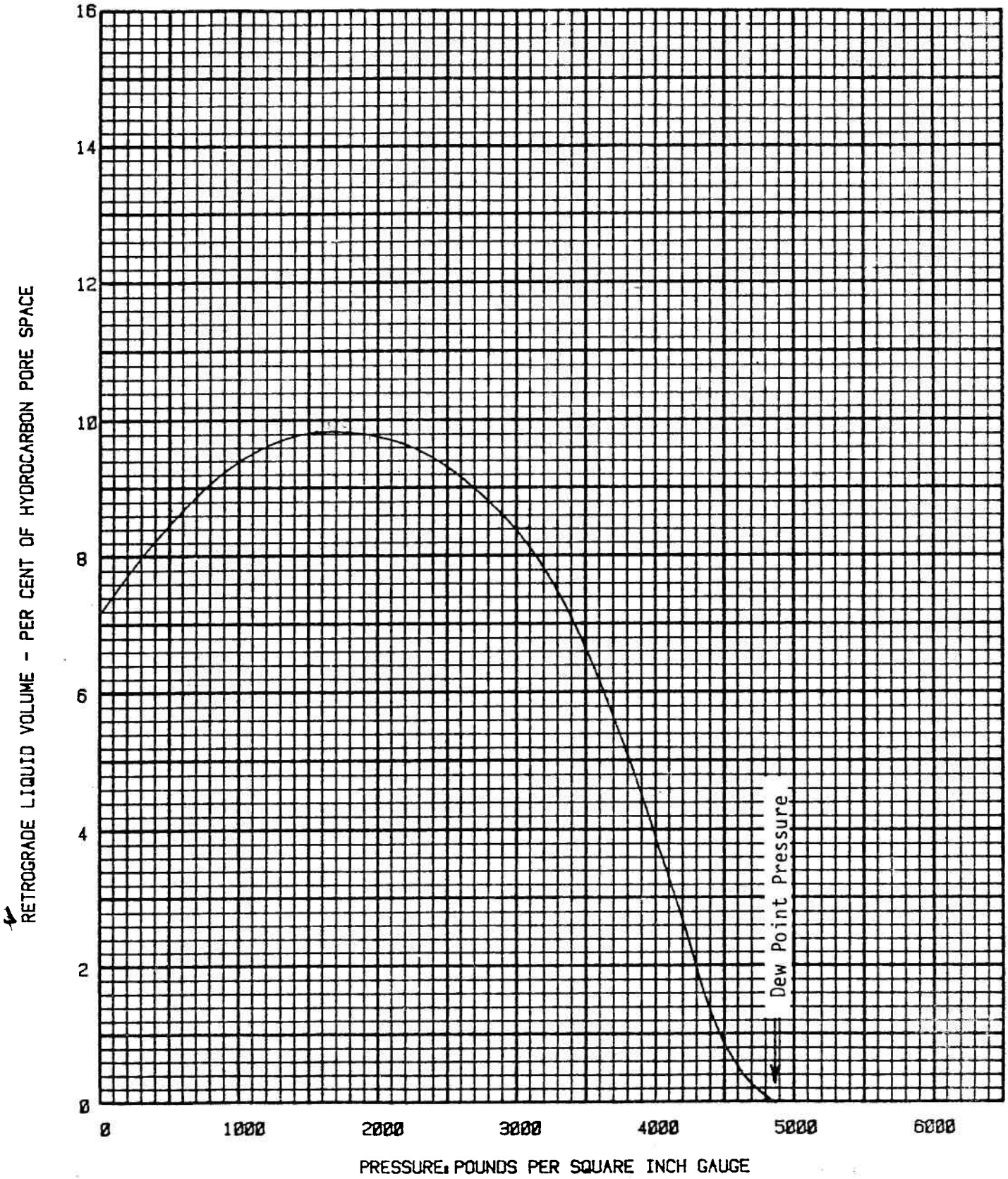

Form 9-331
Dec. 1973

Form Approved.
Budget Bureau No. 42-R1424

UNITED STATES
DEPARTMENT OF THE INTERIOR
GEOLOGICAL SURVEY

# SUNDRY NOTICES AND REPORTS ON WELLS

(Do not use this form for proposals to drill or to deepen or plug back to a different reservoir. Use Form 9-331-C for such proposals.)

1. oil well [X] gas well [X] other

2. NAME OF OPERATOR
Davis Oil Company

3. ADDRESS OF OPERATOR
410 17th Street Suite 1400 Denver, Co. 80202

4. LOCATION OF WELL (REPORT LOCATION CLEARLY. See space 17 below.)
AT SURFACE: SE/NE Sec. 26. T3N, R7E
AT TOP PROD. INTERVAL:
AT TOTAL DEPTH:

5. LEASE
U-47812

6. IF INDIAN, ALLOTTEE OR TRIBE NAME

7. UNIT AGREEMENT NAME

8. FARM OR LEASE NAME
Logan Federal

9. WELL NO.
#1

10. FIELD OR WILDCAT NAME

11. SEC., T., R., M., OR BLK. AND SURVEY OR AREA
Sec.26 T3N R7E

12. COUNTY OR PARISH: Summit
13. STATE: Utah

14. API NO.

15. ELEVATIONS (SHOW DF, KDB, AND WD)

16. CHECK APPROPRIATE BOX TO INDICATE NATURE OF NOTICE, REPORT, OR OTHER DATA

| REQUEST FOR APPROVAL TO: | | SUBSEQUENT REPORT OF: |
|---|---|---|
| TEST WATER SHUT-OFF | ☐ | ☐ |
| FRACTURE TREAT | ☐ | ☐ |
| SHOOT OR ACIDIZE | ☐ | ☐ |
| REPAIR WELL | ☐ | ☐ |
| PULL OR ALTER CASING | ☐ | ☐ |
| MULTIPLE COMPLETE | ☐ | ☐ |
| CHANGE ZONES | ☐ | ☐ |
| ABANDON* | ☐ | ☐ |
| (other) Change of plans | | |

RECEIVED
FEB 09 1983
DIVISION OF
OIL, GAS & MINING

(NOTE: Report results of multiple completion or zone change on Form 9-330.)

17. DESCRIBE PROPOSED OR COMPLETED OPERATIONS (Clearly state all pertinent details, and give pertinent dates, including estimated date of starting any proposed work. If well is directionally drilled, give subsurface locations and measured and true vertical depths for all markers and zones pertinent to this work.)*

Request for production facility change as per attached plat. Said change will be safer due to tank battery - Seperator being constructed on cut rather than fill material. A dike will be constructed around tank battery & seperator facilities.

Subsurface Safety Valve: Manu. and Type _____ Set @ _____ Ft.

18. I hereby certify that the foregoing is true and correct

SIGNED Jack Hale TITLE Area Foreman DATE January 26, 1983

(This space for Federal or State office use)

APPROVED BY _____ TITLE _____ DATE _____
CONDITIONS OF APPROVAL, IF ANY:

*See Instructions on Reverse Side

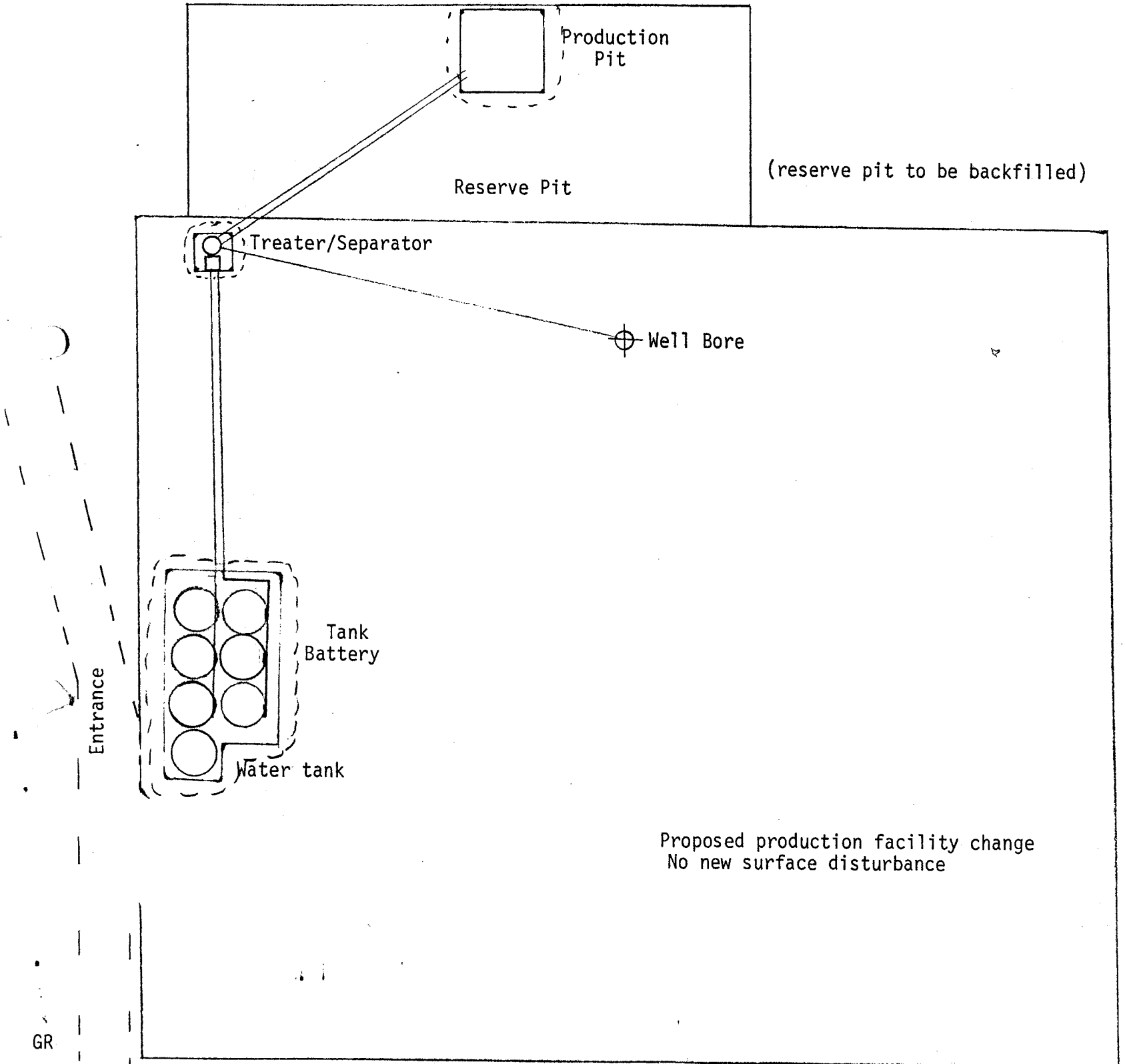


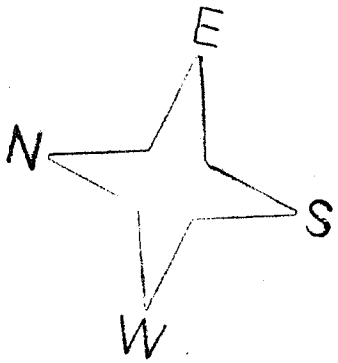


PLAT "A"

#1 Logan Federal
SENE Sec. 26-T3N-R7E
Summit County, Utah

OTIS

7600 E. ORCHARD ROAD, SUITE 354
ENGLEWOOD, CO. 80111
303/694-3942

CMS/25/83

May 11, 1983

Mr. Jim Schumacher
Davis Oil Company
410 17th Street, Suite 1400
Denver, CO 80202

Re: Clarification of Calculated Initial Reservoir Pressure Using Two Independent Surveys on the Logan-Federal #1

Dear Jim:

This communication was requested to present some viewpoints on possible disparities between the Otis and Johnston results.

After reviewing and analyzing the Johnston buildup data, we find that a 5004.5 psia. initial reservoir pressure @ 12,726' was calculated using a Least Squares Fit regression method. To simplify this comparison, this calculated result is adjusted to pressure at 12,650' since both companies measured pressures or gradients to 12,650'. Using a .132 PSI/FT gradient, a reduction of 10.032 psia. is applied correcting the aforementioned apparent initial reservoir pressure to 4994.468 psia.

The Otis analyzed result used is 4966.95 psia. @ 12,650'. The question of the approximate 27 psia. might have several factors causing the difference. Setting depth correlation, scatter in both sets of data analyzed for Pi, and reservoir temperature effects affecting accuracy might all be influencing the difference. Another possibility could be the effect of an anomaly reflected by the drawdown transient which would lower the pressure in the reservoir. Consideration of this possibility is not without justification as it has been noted that the flow times (T) preceeding each buildup were drastically different. The basic flow times (T) reported by Johnston and Otis were 174 and 660 hrs., respectively. This difference could have allowed 500 - 1000 ft. more radial extent of the reservoir to be investigated.

A dampened pressure profile, in this case, would lead to calculation of a lower $P_*$. The buildup profile would then depart upward at a certain rate (ratio) destined for the expected initial pressure. The attached semi-log plot, with curved departure as an example, has been developed to show this condition. It can be noted that the curvature used to encounter the actual late pressure points could easily intersect the ordinate axis at 4994 psia. The ratio of departure in this example, being less than 2 to 1, would denote normally a single discontinuity. If this condition were in fact existing, performance would not show appreciable decay until the alternate drainage pattern is fully developed.

At this time, we do not deem it prudent to classify the reservoir produced by the Logan-Federal well as depleting. We, however, do reccomend a followup survey to substantiate this belief.

Jim, our preliminary, formal report and a rigorous report from Dallas will be forthcoming next week. This letter is provided to support Davis in Friday's presentation to Utah's commission.

Respectfully,

OTIS ENGINEERING CORPORATION

Carl Schwab

Carl M. Schwab
Regional Engineer, Western Region

CMS/tcf

Enclosure

cc: L.E. Coble
R. Baldelli

DAVIS OIL
LOGAN FEDERAL 1
TESTED 1983 APRIL 7 - 1983 MAY 3
ANALYSIS FILE - D.ANv:T14

# OTIS

PRELIMINARY FIELD ANALYSIS

GENERAL FILE - DAVIS:T14

VARIABLE RATE TIME FUNCTION vs REAL GAS POTENTIAL

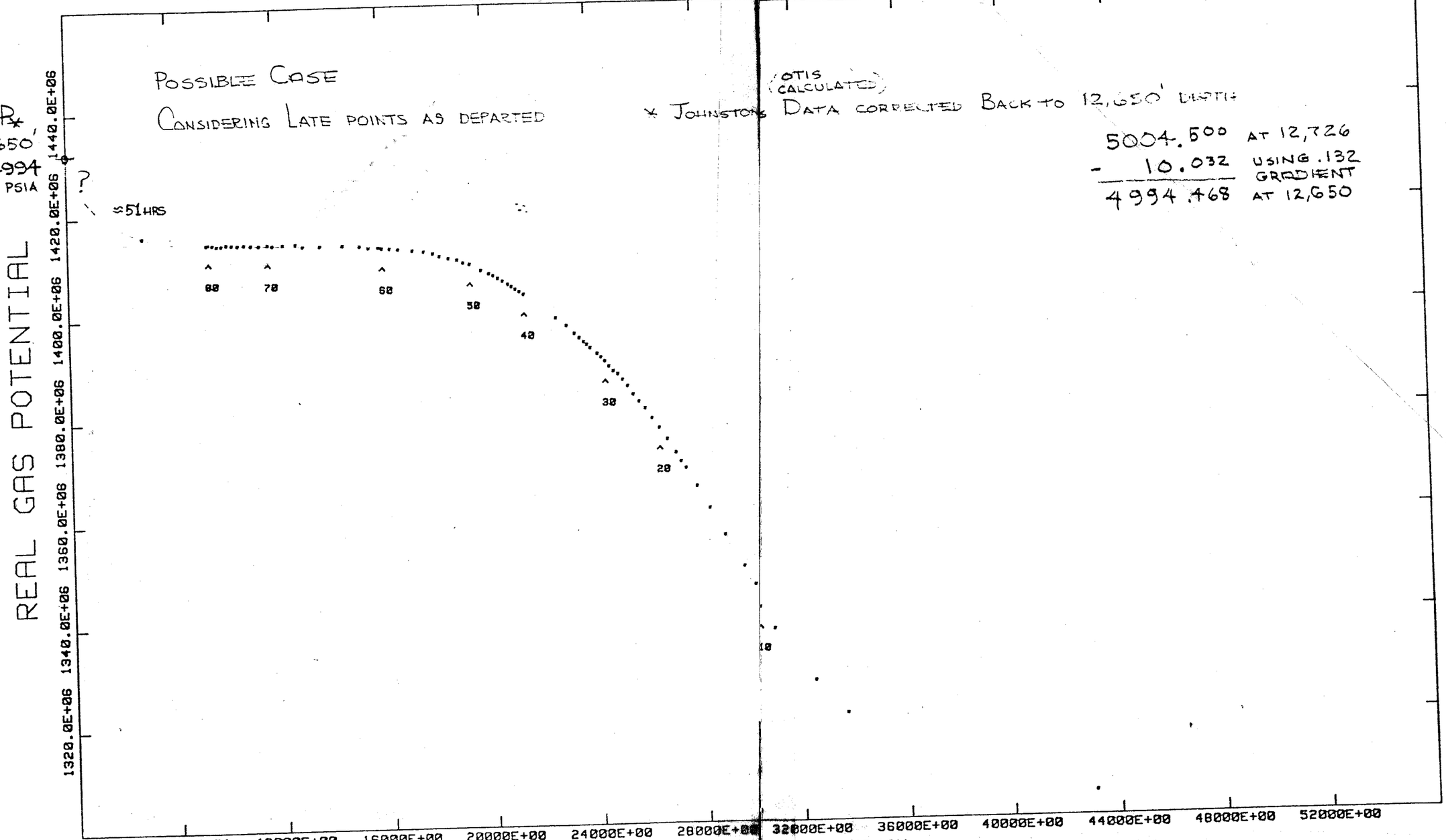

**DAVIS OIL COMPANY** 410 — 17TH STREET, SUITE 1400
DENVER, COLORADO 80202-4472
TELEPHONE: 303-623-1000

NEW ORLEANS
HOUSTON
TULSA

May 27, 1983

Mr. Cleon B. Feight, Director
Utah Division of Oil, Gas and Mining
4241 State Office Building
Salt Lake City, UT 84114

File: SRS-195-031.131

Re: Cause #203-1
Establishment of 80 Acre
Drilling and Spacing Units
for the North Pineview Field
of Summit County, Utah

Dear Mr. Feight:

The Utah Board of Oil, Gas and Mining entered into an order October 29, 1982, establishing 80 acre drilling and spacing units for the below described area:

T3N-R7E

| | |
|---|---|
| Section 25 | W/2 |
| Section 26 | All |
| Section 35 | N/2 |
| Section 36 | NW/4 |

Paragraph 4 of the order states:

"4. The operator of each well shall be required to take a bottom hole pressure test for each well every thirty (30) days and promptly report the results to the Division of Oil, Gas and Mining until further Order of this Board."

Deliveries from the #1 Logan Federal (SE NE 26-T3N-R7E), commenced on April 6, 1983 at a rate of 2567 Mcfd and 233 bcpd. On May 1, 1983, the well was shut-in for a bottom hole pressure buildup survey after producing an estimated 65,346 Mcf (2614 Mcfd average) and 7276 bbls (291 bcpd average). The results of this survey are attached hereto and presented below:

| | |
|---|---|
| Reservoir pressure @ 12,650' | = 4966.95 psia |
| calculated to 12,865' (mid-point of perforations) gradient = .132 psi/ft | = 4995.33 psia |
| Initial Reservoir pressure @ 12,726' | = 5004.5 psia |
| calculated to 12,865' (mid-point of perforations) gradient = .132 psi/ft | = 5022.85 psia |
| Calculated loss in Reservoir pressure | = 27.52 psi |

Paragraph 5 of the order states:

"5. Until a pressure maintenance system is approved by this Board and placed in operation for any well, production of gas and condensate from each such well within the spaced area may not exceed 350 barrels of condensate per day and 4 million cubic feet of gas per day, as long as the reservoir pressure is 150 psi or more above the retrograde dew point. If any bottom hole pressure test referred to above shows that the reservoir pressure is less than 150 psi above the retrograde dew point, all production from such well shall forthwith cease and said well shall be shut-in until the pressure in the well separately measured can be maintained at least 150 psi above the dew point, or until further Order of this Board."

| | |
|---|---|
| Dew point pressure from Core Laboratory study of 10/5/82 = 4731 psig = 4743 psia | = 4743 psia |
| Dew point pressure + 150 psi | = 4893 psia |

The #1 Logan Federal remains 103.33 psi above the pressure limit set by the Utah Board.

Paragraph 6 of the order states:

"6. The operator of the Logan Federal No. 1 discovery well is ordered to obtain a further sample of the reservoir fluid and have the same tested to measure and confirm the actual dew point of the retrograde reservoir."

Fluid samples were taken from the #1 Logan Federal just prior to shutting the well in and were forwarded to Core Laboratories, Dallas, Texas for analysis. As of this writing, results of the fluid analysis have not been released by Core Laboratory. The results of the fluid analysis will be forwarded to you as soon as they become available.

If you have any questions, please advise.

Yours very truly,

DAVIS OIL COMPANY

SR Smith

Stephan R Smith
Chief Engineer

SRS:ee
Attachments

cc: Bob McDonald
Jim Schumacher
Lynn Belcher
Don Rasmussen
Paul Messinger
Ed Lafaye

**DAVIS OIL COMPANY** 410 — 17TH STREET, SUITE 1400
DENVER, COLORADO 80202-4472
TELEPHONE: 303-623-1000

NEW ORLEANS
HOUSTON
TULSA

June 22, 1983

Mr. Cleon B. Feight, Director
Utah Division of Oil, Gas and Mining
4241 State Office Building
Salt Lake City, UT 84114

RECEIVED
JUN 23 1983
DIVISION OF
OIL, GAS & MINING

File: SRS-200-031.131

Re: Cause #203-1
Establishment of 80 Acre
Drilling and Spacing Units
for the North Pineview Field
of Summit County, Utah

Dear Mr. Feight:

The Utah Board of Oil, Gas and Mining entered into an order October 29, 1982, establishing 80 acre drilling and spacing units for the below described area:

T3N-R7E, Summit County, Utah

| | |
|---|---|
| Section 25 | W/2 |
| Section 26 | All |
| Section 35 | N/2 |
| Section 36 | NW/4 |

Paragraph 4 of the order states:

"4. The operator of each well shall be required to take a bottom hole pressure test for each well every thirty (30) days and promptly report the results to the Division of Oil, Gas and Mining until further Order of this Board."

Deliveries from the #1 Logan Federal (SE NE 26-T3N-R7E), commenced on April 6, 1983 at a rate of 2567 Mcfd and 233 bcpd. On May 31, 1983, the well was shut-in for a bottom hole pressure buildup survey after cumulating an estimated 130,284 Mcf (2606 Mcfd average for 50 days), and 14,249 bbls (295 bcpd average for 50 days). The results of this survey are attached hereto and presented below:

Initial reservoir pressure @ 12865' = 5022.85 psia
(midpoint of perforations)

Reservoir pressure from buildup of
5/31/83 = 4976.37 psia @ 12,726
Calculated at 12865' (.132 psi/ft) = 4994.7 psia

Calculated loss in reservoir pressure = 28.15 psia

Reservoir Pressure History

| Date | Pressure @ 12865' | Cumulative Production Mcf | Bbls |
|---|---|---|---|
| 8/29/82 | 5022.85 | Initial | Pressure |
| 5/1/83 | 5000.58 | 65,346 | 7,276 |
| 5/31/83 | 4994.70 | 130,284 | 14,249 |

Paragraph 5 of the order states:

"5. Until a pressure maintenance system is approved by this Board and placed in operation for any well, production of gas and condensate from each such well within the spaced area may not exceed 350 barrels of condensate per day and 4 million cubic feet of gas per day, as long as the reservoir pressure is 150 psi or more above the retrograde dew point. If any bottom hole pressure test referred to above shows that the reservoir pressure is less than 150 psi above the retrograde dew point, all production from such well shall forthwith cease and said well shall be shut-in until the pressure in the well separately measured can be maintained at least 150 psi above the dew point, or until further Order of this Board."

| | |
|---|---|
| Dew point pressure from Core Laboratory study of 10/5/82 = 4731 psig = 4743 psia | = 4743 psia |
| Dew point pressure + 150 psi | = 4893 psia |
| Reservoir pressure (5/31/83) | = 4994.7 |

The #1 Logan Federal remains 101.7 psi above the pressure limit set by the Utah Board.

Paragraph 6 of the order states:

"6. The operator of the Logan Federal No. 1 discovery well is ordered to obtain a further sample of the reservoir fluid and have the same tested to measure and confirm the actual dew point of the retrograde reservoir."

Fluid samples were taken from the #1 Logan Federal just prior to shutting the well in on 5/1/83 and were forwarded to Core Laboratories, Dallas, Texas for analysis. As of this writing, results of the fluid analysis have not been released by Core Laboratory. The results of the fluid analysis will be forwarded to you as soon as they become available.

Otis Engineering revised their results of the May 1, 1983 buildup survey, increasing the reservoir pressure from 4995.33 @ 12,865 to 5000.58. A copy of their revised report is attached.

If you have any questions, please advise.

Yours very truly,

DAVIS OIL COMPANY

SR Smith

Stephan R Smith
Chief Engineer

SRS:ee
Attachments

cc: Bob McDonald
Jim Schumacher
Lynn Belcher
Don Rasmussen
Paul Messinger
Ed Lafaye

DAVIS OIL COMPANY
10 — 17TH STREET, SUITE 1400
DENVER, COLORADO 80202-4472
TELEPHONE: 303-623-1000

NEW ORLEANS
HOUSTON
TULSA

August 29, 1983

RECEIVED
SEP 1 0 1983
DIVISION OF
OIL, GAS & MINING

Jim Shirazi
Mr. Cleon B. Feight, Director
Utah Division of Oil, Gas and Mining
4241 State Office Building
Salt Lake City, UT 84114

Attn: Norm Stout

File: SRS-311-031.131

Re: Cause #203-1
Establishment of 80 Acre
Drilling and Spacing Units
For the North Pineview Field
of Summit County, Utah

Dear Mr. Feight:

The Utah Board of Oil, Gas and Mining entered into an order October 29, 1982, establishing 80 acre drilling and spacing units for the below described area:

T3N-R7E, Summit County, Utah

| | |
|---|---|
| Section 25 | W/2 |
| Section 26 | All |
| Section 35 | N/2 |
| Section 36 | NW/4 |

RECEIVED
SEP 1 9 1983
DIV. OF OIL, GAS & MINING

Paragraph 4 of the order states:

"4. The operator of each well shall be required to take a bottom hole pressure test for each well every thirty (30) days and promptly report the results to the Division of Oil, Gas and Mining until further Order of this Board."

FILE

Deliveries from the #1 Logan Federal (SE NE 26-T3N-R7E), commenced on April 6, 1983 at a rate of 2567 Mcfd and 233 bcpd. On July 23, 1983, the well was shut-in for a bottom hole pressure buildup survey after cumulating an estimated 235,786 Mcf (2562 Mcfd average for 94 days), and 25,996 bbls (276 bcpd average for 94 days). The results of this survey are attached hereto and presented below:

Initial reservoir pressure @12865' = 5022.85 psia
(midpoint of perforations)

Reservoir pressure from buildup of
7/23/83 = 4963.35 psia @ 12,726
Calculated at 12865' (.144 psi/ft) = 4983.4 psia

Calculated loss in reservoir pressure = 28.15 psia

Reservoir Pressure History

| Date | Pressure @ 12865' | Cumulative Production Mcf | Bbls |
|---|---|---|---|
| 8/29/82 | 5022.85 | Initial | Pressure |
| 5/1/83 | 5000.58 | 65,346 | 7,276 |
| 5/31/83 | 4994.70 | 130,284 | 14,249 |
| 7/23/83 | 4983.38 | 235,786 | 25,996 |

Paragraph 5 of the order states:

"5. Until a pressure maintenance system is approved by this Board and placed in operation for any well, production of gas and condensate from each such well within the spaced area may not exceed 350 barrels of condensate per day and 4 million cubic feet of gas per day, as long as the reservoir pressure is 150 psi or more above the retrograde dew point. If any bottom hole pressure test referred to above shows that the reservoir pressure is less than 150 psi above the retrograde dew point, all production from such well shall forthwith cease and said well shall be shut-in until the pressure in the well separately measured can be maintained at least 150 psi above the dew point, or until further Order of this Board."

Dew point pressure from Core Laboratory
study of 10/5/82 = 4731 psig = 4743 psia = 4743 psia

Dew point pressure +150 psi = 4893 psia

Reservoir pressure (7/23/83) = 4983.4

The #1 Logan Federal remains 90.40 psi above the pressure limit set by the Utah Board.

Paragraph 6 of the order states:

6. The operator of the Logan Federal No. 1 discovery well is ordered to obtain a further sample of the reservoir fluid and have the same tested to measure and confirm the actual dew point of the retrograde reservoir."

Fluid samples were taken from the #1 Logan Federal just prior to shutting the well in on 5/1/83 and were forwarded to Core Laboratories, Dallas, Texas for analysis. This fluid sample appeared to be contaminated, therefore three fluid samples were taken prior to the July 23, 1983 shut-in and are currently being evaluated by Core Laboratories, Dallas, Texas.

If you have any questions, please advise.

Yours very truly,

DAVIS OIL COMPANY

SR Smith

Stephan R Smith
Chief Engineer

SRS:ee
Attachments

cc: Bob McDonald
Jim Schumacher
Lynn Belcher
Don Rasmussen
Paul Messinger
Ed Lafaye
R.G. Giles, Amoco Production Co.

File RFL 830541

Well Logan Federal No. 1

## HYDROCARBON ANALYSES OF SEPARATOR PRODUCTS AND CALCULATED WELL STREAM*

| Component | Separator Liquid, Mol Percent | Separator Gas Mol Percent | Separator Gas GPM | Well Stream Mol Percent | Well Stream GPM |
|---|---|---|---|---|---|
| Hydrogen Sulfide | 0.00 | 0.00 | | 0.00 | |
| Carbon Dioxide | 0.53 | 0.87 | | 0.81 | |
| Nitrogen | 0.31 | 2.46 | | 2.10 | |
| Methane | 20.12 | 80.38 | | 70.35 | |
| Ethane | 13.94 | 10.89 | 2.970 | 11.40 | 3.109 |
| Propane | 13.91 | 3.84 | 1.078 | 5.52 | 1.549 |
| iso-Butane | 4.56 | 0.58 | 0.193 | 1.24 | 0.414 |
| n-Butane | 6.84 | 0.64 | 0.206 | 1.67 | 0.537 |
| iso-Pentane | 3.51 | 0.13 | 0.049 | 0.69 | 0.258 |
| n-Pentane | 2.91 | 0.08 | 0.030 | 0.55 | 0.203 |
| Hexanes | 4.36 | 0.08 | 0.033 | 0.79 | 0.329 |
| Heptanes plus | 29.01 | 0.05 | 0.023 | 4.88 | 2.896 |
| | 100.00 | 100.00 | 4.582 | 100.00 | 9.295 |

| Properties of Heptanes plus | | | |
|---|---|---|---|
| API gravity @ 60°F. | 46.6 | | |
| Density, Gm/Cc @ 60°F. | 0.7937 | | 0.794 |
| Molecular weight | 146 | 103 | 146 |

Calculated separator gas gravity (air=1.000) = 0.688
Calculated gross heating value for separator gas = 1182 BTU per cubic foot of dry gas @ 15.025 psia and 60°F.

Primary separator gas collected @ 750 psig and 88°F.
Primary separator liquid collected @ 750 psig and 88°F.

Primary separator gas/separator liquid ratio = 5673 SCF/Bbl @ 88°F.
Primary separator liquid/stock tank liquid ratio = 1.663 Bbls @ 88°F./Bbl
Primary separator gas/well stream ratio = 833.18 MSCF/MMSCF
Stock tank liquid/well stream ratio = 88.3 Bbls/MMSCF

*Rate No. 3.

These analyses, opinions or interpretations are based on observations and material supplied by the client to whom, and for whose exclusive and confidential use, this report is made. The interpretations or opinions expressed represent the best judgement of Core Laboratories, Inc. (all errors and omissions excepted); but Core Laboratories, Inc. and its officers and employees, assume no responsibility and make no warranty or representations as to the productivity, proper operation, or profitableness of any oil, gas or other mineral well or sand in connection with which such report is used or relied upon.

File RFL 830541

Well Logan Federal No. 1

## PRESSURE-VOLUME RELATIONS OF RESERVOIR FLUID AT 220°F.*
(Constant Composition Expansion)

| Pressure, PSIG | | Relative Volume |
|---|---|---|
| 7000 | | 0.8383 |
| 6500 | | 0.8578 |
| 6000 | | 0.8850 |
| 5600 | | 0.9092 |
| 5300 | | 0.9306 |
| 5012 | Reservoir Pressure | 0.9563 |
| 4800 | | 0.9752 |
| 4700 | | 0.9843 |
| 4600 | | 0.9953 |
| 4560 | Dew Point | 1.0000 |
| 4500 | | 1.0066 |
| 4400 | | 1.0195 |
| 4250 | | 1.0390 |
| 4050 | | 1.0690 |
| 3800 | | 1.1158 |
| 3500 | | 1.1801 |
| 3200 | | 1.2657 |
| 2900 | | 1.3739 |
| 2600 | | 1.5093 |
| 2300 | | 1.7027 |
| 2000 | | 1.9594 |
| 1700 | | 2.3283 |
| 1400 | | 2.8585 |
| 1178 | | 3.4318 |
| 1012 | | 4.0359 |
| 811 | | 5.0917 |
| 680 | | 6.1083 |

*Rate No. 3.

These analyses, opinions or interpretations are based on observations and material supplied by the client to whom, and for whose exclusive and confidential use, this report is made. The interpretations or opinions expressed represent the best judgement of Core Laboratories, Inc. (all errors and omissions excepted); but Core Laboratories, Inc. and its officers and employees, assume no responsibility and make no warranty or representations as to the productivity, proper operation, or profitableness of any oil, gas or other mineral well or sand in connection with which such report is used or relied upon.

# BOTTOM HOLE PRESSURE/TEMPERATURE SURVEY REPORT

OEC-906-1

| TEST NUMBER | RUN NUMBER | AREA | DEVIATED HOLE? | DATE (DAY MO YR) | PAGE | OF |
|---|---|---|---|---|---|---|
| 3 | 1 | Anshutz | YES / NO | | 1 | 1 |

| CUSTOMER | WELL NAME OR NUMBER | KB ELEV. (FT) | GND ELEV./WATER DEPTH (FT) | REF. ELEV. (FT.) | SHUT IN TIME BEFORE SURVEY |
|---|---|---|---|---|---|
| Davis Oil Company | Logan Federal #1 | 7514 | 7489 | 7489 | 73.03 (HOURS) |

## UPPER PRESSURE GAUGE

| PRESS. ELEMENT NO. | PRESS. ELEMENT RANGE (psi) | INNER HOUSING NO. | CHART TIME RANGE (HRS) | CALIBRATION NO. | CALIBRATION MODULUS - K | CALIBRATION $a + P_e$ |
|---|---|---|---|---|---|---|
| | | | | | | |

## LOWER PRESSURE GAUGE

| PRESS. ELEMENT NO. | PRESS. ELEMENT RANGE (psi) | INNER HOUSING NO. | CHART TIME RANGE (HRS) | CALIBRATION NO. | CALIBRATION MODULUS - K | CALIBRATION $a + P_e$ |
|---|---|---|---|---|---|---|
| | | | | | | |

## TEMPERATURE GAUGE

| TEMP. ELEMENT NO. | TEMP. ELEMENT RANGE (°F) | INNER HOUSING NO. | CHART TIME RANGE (HRS) | CALIBRATION NO. | CALIBRATION FACTOR(S) |
|---|---|---|---|---|---|
| | | | | | |

| Time | DEPTH | | UPPER PRESSURE GAUGE | | | | | LOWER PRESSURE GAUGE | | | | | TEMPERATURE GAUGE | | | | |
|---|---|---|---|---|---|---|---|---|---|---|---|---|---|---|---|---|---|
| ARRIVED / DEPARTED | MEASURED DEPTH (FEET) | DEPTH DIFFERENCE (FEET) | PRESSURE DEFLECTION Y (INCHES) | NON-LINEAR CORRECTION $C_L$* (psi) | BOTTOM HOLE PRESSURE $P=KY+a+P_e+C_L$ (psig) | PRESSURE DIFFERENCE (psi) | PRESSURE GRADIENT (psi/FT) | PRESSURE DEFLECTION Y (INCHES) | NON-LINEAR CORRECTION $C_L$* (psi) | BOTTOM HOLE PRESSURE $P=KY+a+P_e+C_L$ (psig) | PRESSURE DIFFERENCE (psi) | PRESSURE GRADIENT (psi/FT) | TEMPERATURE DEFLECTION (INCHES) | CALIBRATION FACTOR (°F/INCH) | BOTTOM HOLE TEMPERATURE (°F) | TEMP. DIFFERENCE (°F) | TEMP. GRADIENT (°F/FT) |
| 1 | 12,726 | | | | 1 4957.92 | | | | | 1 | | | | | 1 222.4 | | |
| 2 | 12,000 | 726 | | | 2 4857.00 | | .139 | | | 2 | | | | | 2 212.4 | | |
| 3 | 11,000 | 1000 | | | 3 4710.75 | | .146 | | | 3 | | | | | 3 196.9 | | |
| 4 | 10,000 | 1000 | | | 4 4570.71 | | .140 | | | 4 | | | | | 4 185.2 | | |
| 5 | 9,000 | 1000 | | | 5 4427.78 | | .143 | | | 5 | | | | | 5 172.9 | | |
| 6 | 8,000 | 1000 | | | 6 4283.20 | | .145 | | | 6 | | | | | 6 161.1 | | |
| 7 | 7,000 | 1000 | | | 7 4138.77 | | .144 | | | 7 | | | | | 7 149.5 | | |
| 8 | 6,000 | 1000 | | | 8 3995.91 | | .143 | | | 8 | | | | | 8 136.7 | | |
| 9 | 5,000 | 1000 | | | 9 3852.84 | | .143 | | | 9 | | | | | 9 119.7 | | |
| 10 | 4,000 | 1000 | | | 10 3707.30 | | .146 | | | 10 | | | | | 10 101.0 | | |
| 11 | 3,000 | 1000 | | | 11 3560.12 | | .147 | | | 11 | | | | | 11 89.1 | | |
| 12 | 2,000 | 1000 | | | 12 3414.20 | | .146 | | | 12 | | | | | 12 79.1 | | |
| 13 | 1,000 | 1000 | | | 13 3273.87 | | .140 | | | 13 | | | | | 13 64.4 | | |
| 14 | 0 | 1000 | | | 14 3124.20 | | .150 | | | 14 | | | | | 14 61.9 | | |

# BOTTOM HOLE PRESSURE/TEMPERATURE SURVEY REPORT

OEC-906-1

| TEST NUMBER | RUN NUMBER | AREA | DEVIATED HOLE? | DATE (DAY MO YR) | PAGE OF |
|---|---|---|---|---|---|
| 3 | 1 | Anshutz | YES / NO | | 1 / 1 |

| CUSTOMER | WELL NAME OR NUMBER | KB ELEV. (FT) | GND ELEV./WATER DEPTH (FT) | REF. ELEV. (FT.) | SHUT IN TIME BEFORE SURVEY (HOURS) |
|---|---|---|---|---|---|
| Davis Oil Company | Logan Federal #1 | 7514 | 7489 | 7489 | Flowing |

## UPPER PRESSURE GAUGE

| PRESS. ELEMENT NO. | PRESS. ELEMENT RANGE (psi) | INNER HOUSING NO. | CHART TIME RANGE (HRS) | CALIBRATION NO. | CALIBRATION MODULUS - K | CALIBRATION $a + P_e$ |
|---|---|---|---|---|---|---|
| | | | | | | |

## LOWER PRESSURE GAUGE

| PRESS. ELEMENT NO. | PRESS. ELEMENT RANGE (psi) | INNER HOUSING NO. | CHART TIME RANGE (HRS) | CALIBRATION NO. | CALIBRATION MODULUS - K | CALIBRATION $a + P_e$ |
|---|---|---|---|---|---|---|
| | | | | | | |

## TEMPERATURE GAUGE

| TEMP. ELEMENT NO. | TEMP. ELEMENT RANGE (°F) | INNER HOUSING NO. | CHART TIME RANGE (HRS) | CALIBRATION NO. | CALIBRATION FACTOR(S) |
|---|---|---|---|---|---|
| | | | | | |

| TIME | DEPTH | | UPPER PRESSURE GAUGE | | | | | LOWER PRESSURE GAUGE | | | | | TEMPERATURE GAUGE | | | | |
|---|---|---|---|---|---|---|---|---|---|---|---|---|---|---|---|---|---|
| ARRIVED / DEPARTED | MEASURED DEPTH (FEET) | DEPTH DIFFERENCE (FEET) | PRESSURE DEFLECTION Y (INCHES) | NON-LINEAR CORRECTION $C_L$* (psi) | BOTTOM HOLE PRESSURE $P=KY+a+P_e+C_L$ (psig) | PRESSURE DIFFERENCE (psi) | PRESSURE GRADIENT (psi/FT) | PRESSURE DEFLECTION Y (INCHES) | NON-LINEAR CORRECTION $C_L$* (psi) | BOTTOM HOLE PRESSURE $P=KY+a+P_e+C_L$ (psig) | PRESSURE DIFFERENCE (psi) | PRESSURE GRADIENT (psi/FT) | TEMPERATURE DEFLECTION (INCHES) | CALIBRATION FACTOR (°F/INCH) | BOTTOM HOLE TEMPERATURE (°F) | TEMP. DIFFERENCE (°F) | TEMP. GRADIENT (°F/FT) |
| 1 | 0 | | | | 1 | | | | | 1 | | | | | 1 | | |
| 2 | 50 | 50 | | | 2 2405.59 | | | | | 2 | | | | | 2 105 | | |
| 3 | 2000 | 1950 | | | 3 2666.80 | | .1340 | | | 3 | | | | | 3 126 | | |
| 4 | 4000 | 2000 | | | 4 2936.15 | | .1347 | | | 4 | | | | | 4 153 | | |
| 5 | 6000 | 2000 | | | 5 3202.02 | | .1329 | | | 5 | | | | | 5 175 | | |
| 6 | 8000 | 2000 | | | 6 3470.82 | | .1344 | | | 6 | | | | | 6 194 | | |
| 7 | 10,000 | 2000 | | | 7 3741.31 | | .1352 | | | 7 | | | | | 7 209 | | |
| 8 | 11,000 | 1000 | | | 8 3876.33 | | .1350 | | | 8 | | | | | 8 216 | | |
| 9 | 12,000 | 1000 | | | 9 4019.44 | | .1371 | | | 9 | | | | | 9 219 | | |
| 10 | 12,500 | 500 | | | 10 4083.18 | | .1395 | | | 10 | | | | | 10 220 | | |
| 11 | 12,726 | 226 | | | 11 4115.73 | | .1441 | | | 11 | | | | | 11 221 | | |
| 12 | | | | | 12 | | | | | 12 | | | | | 12 | | |
| 13 | | | | | 13 | | | | | 13 | | | | | 13 | | |
| 14 | | | | | 14 | | | | | 14 | | | | | 14 | | |

NOTE: * USED ONLY WHEN SIGNIFICANT COMPARED TO THE READING ACCURACY OF ± 0.02% FULL SCALE

PREVIEW ANALYSIS

WELL NAME: LOGAN-FEDERAL #1

DATE: JULY 22 - 26, 1983

# PRE EW ANALYSIS DISTRIBUTION LIST

COMPANY: DAVIS OIL COMPANY

WELL: LOGAN-FEDERAL #1

AREA: GILLETTE, WY

TEST: BUILD-UP TEST

DATE: JULY 22 - 26, 1983

COPIES OF THIS REPORT HAVE BEEN SENT TO THE FOLLOWING INDIVIDUALS OR COMPANIES

| COPIES | RECIPIENTS |
|---|---|
| 5 | Davis Oil Company<br>410 17th St., Suite 1400<br>Denver, CO 80202<br>Attn: Steve Smith |
| 1 | Davis Oil Company<br>P. O. Box 189<br>Gillette, WY 82716<br>Attn: Jim Burd |
| 1 | Davis Oil Company<br>3211 Energy Lane, Suite 201<br>Casper, WY 82601 |
| 1 | Otis Engineering Corporation<br>7600 E. Orchard Road<br>Suite 354<br>Englewood, CO 80111<br>Well Data Report Group |

# RESULTS

AVIS OIL
OGAN FEDERAL 1

TESTED 1983 JULY 22 -26
NALYZED 1983 AUG 5

T I S

RESULTS OF PRELIMINARY LINEAR REGRESSION
USING
LINE SOURCE RADIAL FLOW MODEL

| | | |
|---|---|---|
| AVG. DEVIATION OF CALC PRESSURE | .1985 | PSI |
| INITIAL PRESSURE ENTERED | 5015.5 | PSIA |
| NITIAL M(P) ENTERED | 1.42778984619E+9 | PSIASQ/CP |
| INITIAL PRESSURE CALCULATED | 4963.35 | PSIA |
| NITIAL M(P) CALCULATED | 1.4058601E+9 | PSIASQ/CP |
| AST FLOWING PRESSURE | 4117.21 | PSIA |
| AVERAGE PRESSURE | 4963.35 | PSIA |
| WELL RADIUS | .35417 | FEET |
| OTAL COMPRESSIBILITY | 73.722 | V/MMV/PSI |
| AVG. VISCOSITY | .02355 | CENTIPOISE |
| POROSITY ENTERED | 11 | PERCENT |
| AST QSF | 7074.92477393 | MCF/DAY |
| ERMEABILITY CALCULATED | 38.3115 | MILLIDARCIES |
| NET THICKNESS ENTERED | 48 | FEET |
| SKIN FACTOR CALCULATED | 84.81 | |
| OMPLETION EFFICIENCY | 9.71 | PER-CENT |
| NONDARCY FLOW CONSTANT CALCULATED | 0 | |
| AT 8522 HRS,DRAWDOWN RADIUS= | 1889.0 | FEET |
| DRAWDOWN AREA= | 25726 | ACRES |
| GAS IN DRAWDOWN AREA= | 778267.8 | MMCF |
| AT 8522 HOURS FROM START OF TEST | | |
| UILDUP RADIUS= | 1740 | FEET |
| BUILDUP AREA= | 217.4 | ACRES |
| GAS IN BUILDUP AREA= | 6577.9 | MMCF |
| T I S | | |
| w OR Aw | 0 | |
| NO. OF POINTS ANALYSED | 24 | |
| C1RADIAL | 4.37530317047E+79 | |

DAVIS OIL
JGAN FEDERAL 1

TESTED 1983 JULY 22 -26
NALYZED 1983 AUG 5

| T I S | TIME (HRS) | X MCFPD-LOG(HRS) | PRES.MEAS. PSIG | PRES.CALC. PSIG | DIF |
|---|---|---|---|---|---|
| 4 | 8449.97 | 3.1842518574E+04 | 4106.21 | 4106.21 | 0.00 |
| 50 | 8455.00 | 2.1429897241E+04 | 4938.85 | 4938.87 | .02 |
| 51 | 8456.00 | 2.0326515768E+04 | 4939.70 | 4939.57 | -.13 |
| 52 | 8457.00 | 1.9414670335E+04 | 4940.37 | 4940.14 | -.23 |
| 53 | 8458.00 | 1.8641990508E+04 | 4940.81 | 4940.63 | -.18 |
| 54 | 8459.00 | 1.7974738346E+04 | 4941.19 | 4941.05 | -.14 |
| 55 | 8461.00 | 1.6871210154E+04 | 4941.82 | 4941.74 | -.08 |
| 56 | 8463.00 | 1.5986869390E+04 | 4942.19 | 4942.30 | .11 |
| 57 | 8465.00 | 1.5255707293E+04 | 4942.46 | 4942.76 | .30 |
| 58 | 8467.00 | 1.4637014416E+04 | 4942.74 | 4943.15 | .41 |
| 59 | 8471.00 | 1.3638152661E+04 | 4943.49 | 4943.77 | .28 |
| 60 | 8475.00 | 1.2858242657E+04 | 4944.03 | 4944.26 | .23 |
| 61 | 8479.00 | 1.2226264880E+04 | 4944.45 | 4944.66 | .21 |
| 62 | 8483.00 | 1.1699963337E+04 | 4944.82 | 4944.99 | .17 |
| 63 | 8487.00 | 1.1252338289E+04 | 4945.76 | 4945.27 | -.49 |
| 64 | 8491.00 | 1.0865193215E+04 | 4945.40 | 4945.52 | .12 |
| 65 | 8495.00 | 1.0525744468E+04 | 4945.73 | 4945.73 | 0.00 |
| 66 | 8499.00 | 1.0224706613E+04 | 4945.94 | 4945.92 | -.02 |
| 67 | 8503.00 | 9.9551477584E+03 | 4946.07 | 4946.09 | .02 |
| 68 | 8507.00 | 9.7117728535E+03 | 4946.28 | 4946.24 | -.04 |
| 69 | 8511.00 | 9.4904574349E+03 | 4946.46 | 4946.38 | -.08 |
| 70 | 8515.00 | 9.2879343394E+03 | 4946.66 | 4946.51 | -.15 |
| 71 | 8519.00 | 9.1015772998E+03 | 4946.75 | 4946.63 | -.12 |
| 72 | 8522.00 | 8.9711170377E+03 | 4946.92 | 4946.71 | -.21 |

U T I S

DAVIS OIL
LOGAN FEDERAL 1

# OTIS

PRELIMINARY FIELD ANALYSIS

TESTED 1983 JULY 22 -26
ANALYZED 1983 AUG 5

ANALYSIS FILE - LOGAN_AN

GENERAL FILE - LOGAN_GEN

CERTAIN POINTS IN THE INTERVAL 4 THRU 72

CALCULATED( ——— ) VS MEASURED(0) PRESSURES AND DIFFERENCES(.)

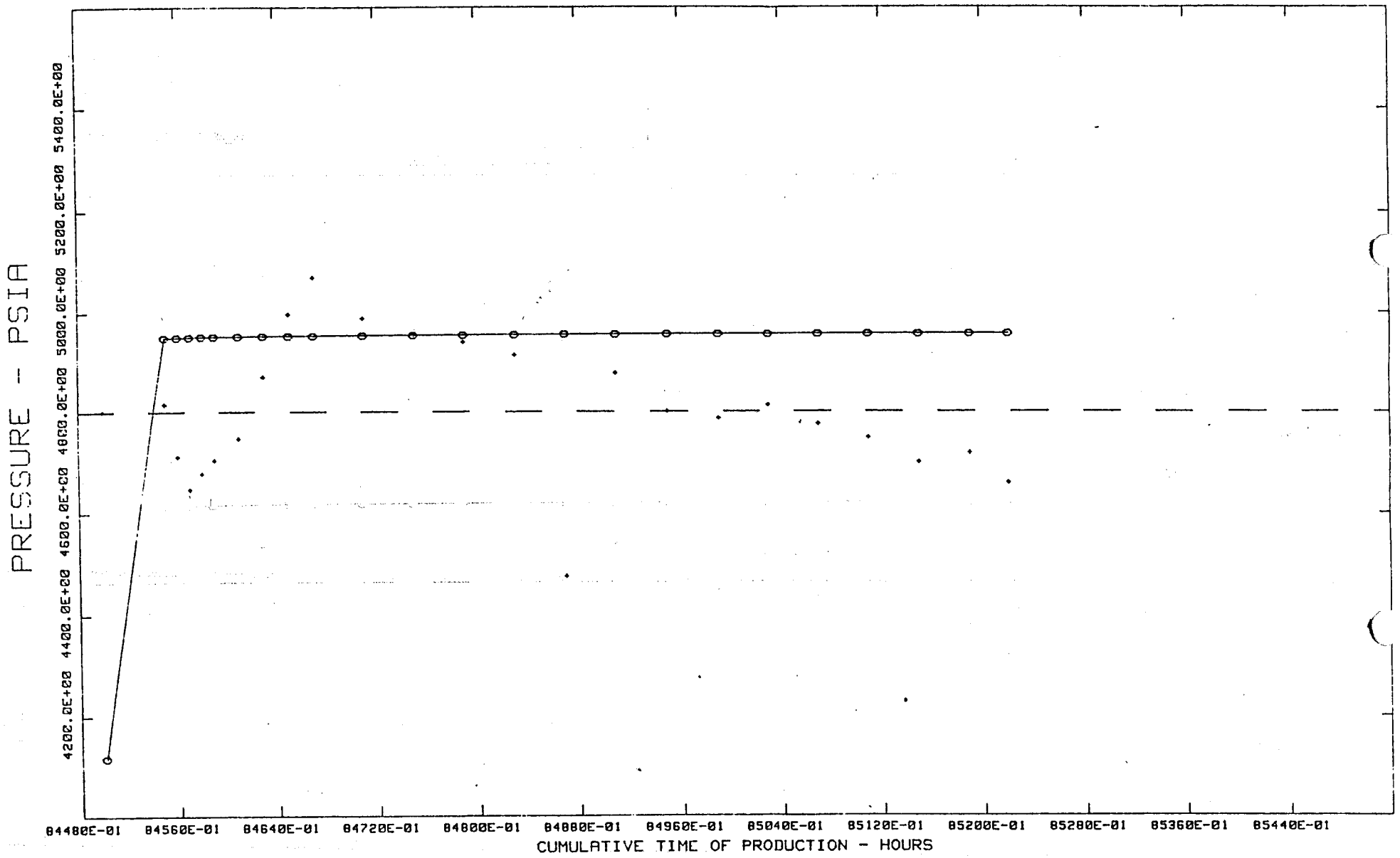

DAVIS OIL
LOGAN FEDERAL 1

ANALYSIS FILE - LOGAN_AN

# OTIS

PRELIMINARY FIELD ANALYSIS

TESTED 1983 JULY 22 -26
ANALYZED 1983 AUG 5

GENERAL FILE -

VARIABLE RATE TIME FUNCTION vs REAL GAS POTENTIAL

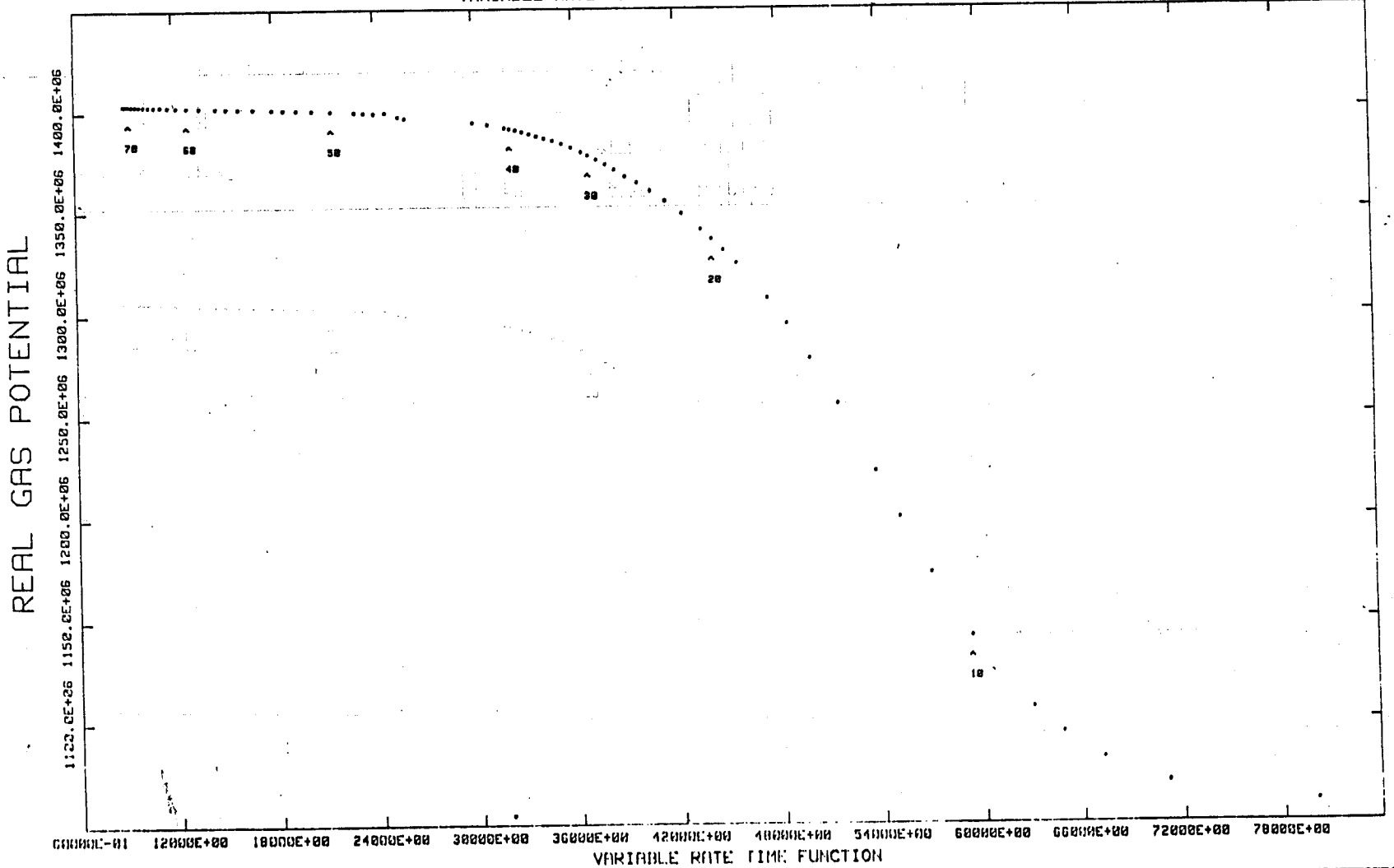

# PROCESSED DATA

0

DAVIS OIL
LOGAN FEDERAL 1

TESTED 1983 JULY 22 -26
ANALYZED 1983 AUG 5

ENERAL FILE: LOGAN_GEN
NALYSIS FILE: LOGAN_AN

T I S
JOB INFORMATION:

| | | | |
|---|---|---|---|
| TEST BEGAN- 1983 JUL 22 | | | |
| TEST ENDED- 1983 JUL 23 | | | |
| WELL I.D.- LOGAN FEDERAL 1 | | | |
| JOB I.D.- | DS58A015 | ANALYST- | STEVENSON |
| GAUGE NO.- | HEWLETT-PACK | GAUGE DEPTH,FT- | 12726 |

WELL CONFIGURATION:

| | | | |
|---|---|---|---|
| TUBING LENGTH,FEET | 12710.0 | CASING LENGTH,FEET | 13000.0 |
| TUBING O.D.,INCHES | 2.875 | PLUGBACK DEPTH FEET | 13307.0 |
| PACKER DEPTH FEET | 12710.0 | WELLBORE DIAMETER,INCHES | 8.500 |
| TOP OF PERFS,FEET | 12804.0 | BOTTOM OF PERFS,FEET | 12926.0 |

RESERVOIR DATA:

| | | | |
|---|---|---|---|
| INITIAL PRESSURE,PSIG | 5004.500 | PRESSURE DATUM,FEET | 12726.0 |
| GAS MEAS. PRESS. BASE,PSIA | 14.730 | ATMOSPHERIC PRESSURE,PSIA | 11.000 |
| RESERVOIR TEMP., DEG.F. | 222.0 | AVG. RES. DEPTH, FEET | 12900.0 |
| AVG. POROSITY, PERCENT | 11.00 | AVG. WATER SAT., PERCENT | 49.00 |
| AVG. NET. THICKNESS, FEET | 48.00 | FORM. COMP., V/MMV/PSI | 5.000 |
| TOTAL COMP., V/MMV/PSI | 71.416 | FORMATION FLUID- | GAS |

T I S

CALCULATED FLUID PROPERTIES
USED IN PRELIMINARY ANALYSIS

GAS SP.GR. .68000 GAS TYPE COND.
RES.TEMP.(DEG.F.) 222.00
PSEUDO CRIT.TEMP 378.39 DEG.R PSEUDO CRIT.PRES 668.86 PSIA
GAS PROPERTIES FILE:MSUS - LOGAN_F :HP9895,700,3

| PRESSURE PSIA | P/Z | Z FACTOR | VISCOSITY CP. | VOL.FACT. RESB/SMCF | CMPRSBLTY V/MMV/PSI | REAL GAS POTENTIAL |
|---|---|---|---|---|---|---|
| 349.367 | 358.734 | .97389 | .0124 | 9.590952 | 2939.07364 | 6.830094E+06 |
| 648.101 | 679.799 | .95337 | .0130 | 5.061197 | 1610.37964 | 3.113144E+07 |
| 946.835 | 1012.228 | .93540 | .0136 | 3.399035 | 1115.71740 | 6.895551E+07 |
| 1245.570 | 1353.623 | .92017 | .0143 | 2.541770 | 852.63938 | 1.194770E+08 |
| 1544.304 | 1700.588 | .90810 | .0150 | 2.023182 | 685.69363 | 1.818145E+08 |
| 1843.038 | 2048.915 | .89952 | .0156 | 1.679230 | 567.55925 | 2.550122E+08 |
| 2141.772 | 2393.919 | .89467 | .0163 | 1.437225 | 477.76882 | 3.380354E+08 |
| 2440.506 | 2730.944 | .89365 | .0170 | 1.259857 | 406.34393 | 4.297828E+08 |
| 2739.241 | 3055.905 | .89638 | .0178 | 1.125885 | 348.01065 | 5.291152E+08 |
| 3037.975 | 3365.699 | .90263 | .0185 | 1.022254 | 299.73374 | 6.348951E+08 |
| 3336.709 | 3658.377 | .91207 | .0193 | .940471 | 259.55505 | 7.460280E+08 |
| 3635.443 | 3933.083 | .92432 | .0200 | .874784 | 226.04400 | 8.614961E+08 |
| 3934.177 | 4189.842 | .93898 | .0208 | .821176 | 198.05535 | 9.803821E+08 |
| 4232.911 | 4429.298 | .95566 | .0216 | .776782 | 174.63267 | 1.101880E+09 |
| 4531.646 | 4652.472 | .97403 | .0224 | .739521 | 154.97105 | 1.225294E+09 |
| 4830.380 | 4860.572 | .99379 | .0232 | .707859 | 138.39835 | 1.350039E+09 |
| 5129.114 | 5054.867 | 1.01469 | .0240 | .680651 | 124.35966 | 1.475623E+09 |
| 5427.848 | 5236.598 | 1.03652 | .0248 | .657029 | 112.40140 | 1.601644E+09 |
| 5726.582 | 5406.937 | 1.05912 | .0256 | .636330 | 102.15528 | 1.727772E+09 |
| 6025.316 | 5566.961 | 1.08233 | .0264 | .618039 | 93.32346 | 1.853743E+09 |
| 6324.051 | 5717.646 | 1.10606 | .0272 | .601751 | 85.66536 | 1.979349E+09 |
| 6622.785 | 5859.869 | 1.13019 | .0281 | .587146 | 78.98546 | 2.104426E+09 |
| 6921.519 | 5994.410 | 1.15466 | .0289 | .573968 | 73.12661 | 2.228852E+09 |
| 7220.253 | 6121.965 | 1.17940 | .0297 | .562009 | 67.95988 | 2.352536E+09 |
| 7518.987 | 6243.153 | 1.20436 | .0305 | .551100 | 63.38010 | 2.475416E+09 |
| 7817.722 | 6358.521 | 1.22949 | .0312 | .541100 | 59.30084 | 2.597453E+09 |
| 8116.456 | 6468.558 | 1.25476 | .0320 | .531896 | 55.65070 | 2.718629E+09 |
| 8415.190 | 6573.699 | 1.28013 | .0328 | .523388 | 52.37051 | 2.838940E+09 |
| 8713.924 | 6674.332 | 1.30559 | .0335 | .515497 | 49.41028 | 2.958398E+09 |
| 9012.658 | 6770.805 | 1.33111 | .0342 | .508152 | 46.72906 | 3.077026E+09 |
| 9311.392 | 6863.427 | 1.35667 | .0349 | .501295 | 44.29162 | 3.194860E+09 |
| 9610.127 | 6952.480 | 1.38226 | .0356 | .494874 | 42.06826 | 3.311940E+09 |
| 9908.861 | 7038.215 | 1.40787 | .0362 | .488845 | 40.03371 | 3.428316E+09 |
| 10207.595 | 7120.860 | 1.43348 | .0369 | .483172 | 38.16632 | 3.544045E+09 |
| 10506.329 | 7200.621 | 1.45909 | .0375 | .477820 | 36.44752 | 3.659188E+09 |
| 10805.063 | 7277.684 | 1.48468 | .0380 | .472760 | 34.86129 | 3.773811E+09 |
| 11103.797 | 7352.220 | 1.51026 | .0385 | .467967 | 33.39344 | 3.887986E+09 |
| 11402.532 | 7424.384 | 1.53582 | .0390 | .463419 | 32.03219 | 4.001786E+09 |

0

DAVIS OIL
LOGAN FEDERAL 1

TESTED 1983 JULY 22 -26
ANALYZED 1983 AUG 5

ENERAL FILE: LOGAN_GEN
NALYSIS FILE: LOGAN_AN

0

T I S

TIME-PRESSURE DATA

| TIME HOURS | PRESSURE PSIA | M(P) | RATE-TIME FUNCTION | LOG10 SHUTIN TIME | LOG10 DELTA M(P) |
|---|---|---|---|---|---|
| 8450.9908 | 4929.3800 | 1391585900.0 | 31937.5566 | .0078 | 8.5277 |
| 8451.1575 | 4933.1500 | 1393169700.0 | 30900.2410 | .0736 | 8.5297 |
| 8451.3242 | 4936.0200 | 1394375400.0 | 30004.1087 | .1308 | 8.5312 |
| 8452.4908 | 4941.3000 | 1396593800.0 | 25840.3811 | .4011 | 8.5341 |
| 8452.6575 | 4943.3200 | 1397442500.0 | 25420.2812 | .4289 | 8.5351 |
| 8452.9908 | 4948.2600 | 1399518300.0 | 24658.3122 | .4797 | 8.5378 |
| 8453.3242 | 4947.2800 | 1399106500.0 | 23982.3669 | .5252 | 8.5372 |
| 8453.6575 | 4948.1000 | 1399451100.0 | 23375.9683 | .5664 | 8.5377 |
| 8453.9908 | 4948.6200 | 1399669600.0 | 22826.9338 | .6040 | 8.5380 |
| 8455.0000 | 4949.8500 | 1400186500.0 | 21429.8972 | .7013 | 8.5386 |
| 8456.0000 | 4950.7000 | 1400543700.0 | 20326.5158 | .7801 | 8.5391 |
| 8457.0000 | 4951.3700 | 1400825300.0 | 19414.6703 | .8468 | 8.5394 |
| 8458.0000 | 4951.8100 | 1401010200.0 | 18641.9905 | .9046 | 8.5396 |
| 8459.0000 | 4952.1900 | 1401169900.0 | 17974.7383 | .9556 | 8.5398 |
| 8461.0000 | 4952.8200 | 1401434600.0 | 16871.2102 | 1.0425 | 8.5402 |
| 8463.0000 | 4953.1900 | 1401590100.0 | 15986.8694 | 1.1149 | 8.5404 |
| 8465.0000 | 4953.4600 | 1401703600.0 | 15255.7073 | 1.1769 | 8.5405 |
| 8467.0000 | 4953.7400 | 1401821300.0 | 14637.0144 | 1.2311 | 8.5407 |
| 8471.0000 | 4954.4900 | 1402136500.0 | 13638.1527 | 1.3228 | 8.5411 |
| 8475.0000 | 4955.0300 | 1402363400.0 | 12858.2427 | 1.3984 | 8.5413 |
| 8479.0000 | 4955.4500 | 1402539900.0 | 12226.2649 | 1.4628 | 8.5416 |
| 8483.0000 | 4955.8200 | 1402695400.0 | 11699.9633 | 1.5189 | 8.5417 |
| 8487.0000 | 4956.7600 | 1403090500.0 | 11252.3383 | 1.5685 | 8.5422 |
| 8491.0000 | 4956.4000 | 1402939200.0 | 10865.1932 | 1.6131 | 8.5421 |
| 8495.0000 | 4956.7300 | 1403077900.0 | 10525.7445 | 1.6535 | 8.5422 |
| 8499.0000 | 4956.9400 | 1403166100.0 | 10224.7066 | 1.6904 | 8.5423 |
| 8503.0000 | 4957.0700 | 1403220800.0 | 9955.1478 | 1.7245 | 8.5424 |
| 8507.0000 | 4957.2800 | 1403309000.0 | 9711.7729 | 1.7561 | 8.5425 |
| 8511.0000 | 4957.4600 | 1403384700.0 | 9490.4574 | 1.7855 | 8.5426 |
| 8515.0000 | 4957.6600 | 1403468700.0 | 9287.9343 | 1.8131 | 8.5427 |
| 8519.0000 | 4957.7500 | 1403506600.0 | 9101.5773 | 1.8390 | 8.5428 |
| 8522.0000 | 4957.9200 | 1403578000.0 | 8971.1170 | 1.8575 | 8.5428 |

0

DAVIS OIL
LOGAN FEDERAL 1

TESTED 1983 JULY 22 -26
ANALYZED 1983 AUG 5

ENERAL FILE: LOGAN_GEN
NALYSIS FILE: LOGAN_AN

0
T I S

TIME-PRESSURE DATA

| TIME HOURS | PRESSURE PSIA | M(P) | RATE-TIME FUNCTION | LOG10 SHUTIN TIME | LOG10 DELTA M(P) |
|---|---|---|---|---|---|
| 8449.8344 | 4117.2100 | 1054559700.0 | 31811.4847 | 0.0000 | 0.0000 |
| 8449.9178 | 4116.6100 | 1054315100.0 | 31830.2129 | 0.0000 | 0.0000 |
| 8449.9353 | 4117.2100 | 1054559700.0 | 31834.1329 | 0.0000 | 0.0000 |
| 8449.9728 | 4117.2100 | 1054559700.0 | 31842.5186 | 0.0000 | 0.0000 |
| 8449.9739 | 4130.3500 | 1059918100.0 | 79969.1985 | -2.9542 | 6.7290 |
| 8449.9767 | 4153.9800 | 1069564600.0 | 71106.6146 | -2.4102 | 7.1762 |
| 8449.9794 | 4182.8100 | 1081351500.0 | 67293.8752 | -2.1761 | 7.4280 |
| 8449.9822 | 4213.4200 | 1093886800.0 | 64830.2516 | -2.0248 | 7.5947 |
| 8449.9850 | 4243.5300 | 1106237300.0 | 63006.7501 | -1.9128 | 7.7133 |
| 8449.9933 | 4329.6400 | 1141661100.0 | 59330.5299 | -1.6871 | 7.9400 |
| 8450.0017 | 4405.8500 | 1173131200.0 | 56924.6089 | -1.5393 | 8.0740 |
| 8450.0100 | 4470.5400 | 1199924000.0 | 55133.3347 | -1.4292 | 8.1625 |
| 8450.0183 | 4524.5400 | 1222341200.0 | 53705.8683 | -1.3415 | 8.2247 |
| 8450.0350 | 4604.5300 | 1255626700.0 | 51503.7617 | -1.2061 | 8.3033 |
| 8450.0517 | 4658.2500 | 1278029500.0 | 49828.3899 | -1.1030 | 8.3492 |
| 8450.0683 | 4698.8700 | 1294993100.0 | 48476.0610 | -1.0197 | 8.3810 |
| 8450.0850 | 4728.4000 | 1307337300.0 | 47342.3029 | -.9499 | 8.4027 |
| 8450.1178 | 4769.2100 | 1324412700.0 | 45536.6015 | -.8386 | 8.4311 |
| 8450.1344 | 4784.4700 | 1330802200.0 | 44770.5197 | -.7914 | 8.4413 |
| 8450.1511 | 4797.5500 | 1336280800.0 | 44080.0301 | -.7488 | 8.4498 |
| 8450.1678 | 4808.7000 | 1340952300.0 | 43451.6039 | -.7100 | 8.4570 |
| 8450.2011 | 4827.0600 | 1348647300.0 | 42342.4889 | -.6414 | 8.4685 |
| 8450.2344 | 4841.6100 | 1354747600.0 | 41385.7701 | -.5823 | 8.4774 |
| 8450.2681 | 4853.6100 | 1359780200.0 | 40538.1936 | -.5298 | 8.4846 |
| 8450.3011 | 4863.5800 | 1363962500.0 | 39794.7125 | -.4837 | 8.4905 |
| 8450.3344 | 4870.8900 | 1367029500.0 | 39117.9206 | -.4417 | 8.4948 |
| 8450.3681 | 4878.8600 | 1370374000.0 | 38496.5590 | -.4031 | 8.4994 |
| 8450.4011 | 4885.0000 | 1372950800.0 | 37935.5748 | -.3682 | 8.5030 |
| 8450.4344 | 4890.8000 | 1375385300.0 | 37412.6430 | -.3357 | 8.5063 |
| 8450.4681 | 4895.6700 | 1377429700.0 | 36922.7703 | -.3052 | 8.5090 |
| 8450.4972 | 4899.6700 | 1379109000.0 | 36524.2828 | -.2803 | 8.5113 |
| 8450.5472 | 4905.3300 | 1381485400.0 | 35890.8696 | -.2408 | 8.5144 |
| 8450.5972 | 4909.8000 | 1383362400.0 | 35311.2361 | -.2045 | 8.5169 |
| 8450.6472 | 4913.4900 | 1384911900.0 | 34777.0845 | -.1711 | 8.5190 |
| 8450.6972 | 4916.0800 | 1385999600.0 | 34281.9002 | -.1400 | 8.5204 |
| 8450.7472 | 4918.9500 | 1387205000.0 | 33820.4745 | -.1110 | 8.5220 |
| 8450.7972 | 4921.6200 | 1388326400.0 | 33388.5777 | -.0838 | 8.5234 |
| 8450.8472 | 4924.3100 | 1389456200.0 | 32982.7278 | -.0583 | 8.5249 |
| 8450.8972 | 4926.4100 | 1390338300.0 | 32600.0242 | -.0341 | 8.5261 |

0

DAVIS OIL
LOGAN FEDERAL 1

TESTED 1983 JULY 22 -26
ANALYZED 1983 AUG 5

ENERAL FILE: LOGAN_GEN
NALYSIS FILE: LOGAN_AN

T I S

TIME-RATE DATA

| TIME HOURS | OIL-RATE STB/DAY | GAS RATE MSCF/DAY | WATER RATE BBL/DAY | SAND FACE RATE STD MCF/DAY |
|---|---|---|---|---|
| 37.0000 | 270.0000 | 4000.0000 | 7.0000 | 4237.6761 |
| 61.0000 | 344.0000 | 4200.0000 | 22.0000 | 4521.7239 |
| 85.0000 | 284.0000 | 4000.0000 | 0.0000 | 4239.3552 |
| 97.0000 | 304.0000 | 4000.0000 | 0.0000 | 4256.2112 |
| 145.0000 | 0.0000 | 0.0000 | 0.0000 | 0.0000 |
| 157.0000 | 240.0000 | 2500.0000 | 8.0000 | 2713.8283 |
| 181.0000 | 246.0000 | 2700.0000 | 0.0000 | 2907.3288 |
| 199.0000 | 50.0000 | 1300.0000 | 6.0000 | 1350.8047 |
| 213.0000 | 0.0000 | 0.0000 | 0.0000 | 0.0000 |
| 229.0000 | 240.0000 | 3100.0000 | 0.0000 | 3302.2720 |
| 244.5000 | 240.0000 | 3200.0000 | 0.0000 | 3402.2720 |
| 279.0000 | 0.0000 | 0.0000 | 0.0000 | 0.0000 |
| 301.0000 | 200.0000 | 2300.0000 | 0.0000 | 2468.5600 |
| 325.0000 | 400.0000 | 4500.0000 | 0.0000 | 4837.1200 |
| 336.0000 | 240.0000 | 4800.0000 | 0.0000 | 5002.2720 |
| 369.5000 | 0.0000 | 0.0000 | 0.0000 | 0.0000 |
| 421.0000 | 484.0000 | 5000.0000 | 9.0000 | 5420.8925 |
| 448.0000 | 561.0000 | 6000.0000 | 6.0000 | 6481.4607 |
| 449.0000 | 0.0000 | 0.0000 | 0.0000 | 0.0000 |
| 492.0000 | 700.0000 | 8000.0000 | 6.0000 | 8598.6073 |
| 516.0000 | 710.0000 | 7900.0000 | 6.0000 | 8507.0339 |
| 527.0000 | 720.0000 | 7900.0000 | 5.0000 | 8514.0204 |
| 528.0000 | 0.0000 | 0.0000 | 0.0000 | 0.0000 |
| 540.0000 | 680.0000 | 5500.0000 | 5.0000 | 6080.3077 |
| 571.0025 | 493.0000 | 5500.0000 | 5.0000 | 5922.7026 |
| 5863.0000 | 0.0000 | 0.0000 | 0.0000 | 0.0000 |
| 5887.0000 | 233.0000 | 2567.0000 | 0.0000 | 2763.3724 |
| 5935.0000 | 296.0000 | 2171.0000 | 0.0000 | 2420.4688 |
| 5959.0000 | 251.0000 | 2197.0000 | 0.0000 | 2408.5428 |
| 5983.0000 | 224.0000 | 2187.0000 | 0.0000 | 2375.7872 |
| 6002.5000 | 246.0000 | 2090.0000 | 0.0000 | 2297.3288 |
| 6007.0000 | 0.0000 | 0.0000 | 0.0000 | 0.0000 |
| 6029.0000 | 279.0000 | 2332.0000 | 0.0000 | 2567.1412 |
| 6031.0000 | 0.0000 | 0.0000 | 0.0000 | 0.0000 |
| 6053.0000 | 315.0000 | 3259.0000 | 0.0000 | 3524.4820 |
| 6079.0000 | 423.0000 | 3256.0000 | 0.0000 | 3612.5044 |
| 6103.0000 | 390.0000 | 3240.0000 | 0.0000 | 3568.6920 |
| 6127.0000 | 378.0000 | 3333.0000 | 0.0000 | 3651.5784 |

D

DAVIS OIL
LOGAN FEDERAL 1

TESTED 1983 JULY 22 -26
ANALYZED 1983 AUG 5

ENERAL FILE: LOGAN_GEN
NALYSIS FILE: LOGAN_AN

T I S

TIME-RATE DATA

| TIME HOURS | OIL-RATE STB/DAY | GAS RATE MSCF/DAY | WATER RATE BBL/DAY | SAND FACE RATE STD MCF/DAY |
|---|---|---|---|---|
| 6199.0000 | 398.0000 | 3611.0000 | 0.0000 | 3946.4344 |
| 6221.5000 | 435.0000 | 3260.0000 | 0.0000 | 3626.6180 |
| 6223.0000 | 0.0000 | 0.0000 | 0.0000 | 0.0000 |
| 6247.0000 | 380.0000 | 3148.0000 | 0.0000 | 3468.2640 |
| 6271.0000 | 278.0000 | 2461.0000 | 0.0000 | 2695.2984 |
| 6295.0000 | 291.0000 | 2487.0000 | 0.0000 | 2732.2548 |
| 6319.0000 | 237.0000 | 2342.0000 | 0.0000 | 2541.7436 |
| 6343.0000 | 290.0000 | 2708.0000 | 0.0000 | 2952.4120 |
| 6361.0000 | 293.0000 | 2083.0000 | 0.0000 | 2329.9404 |
| 6367.0000 | 0.0000 | 0.0000 | 0.0000 | 0.0000 |
| 6371.0000 | 336.0000 | 3850.0000 | 0.0000 | 4133.1808 |
| 6391.0000 | 0.0000 | 0.0000 | 0.0000 | 0.0000 |
| 6415.0000 | 295.0000 | 2469.0000 | 0.0000 | 2717.6260 |
| 6424.0000 | 251.4000 | 2705.0000 | 10.0000 | 2930.6819 |
| 6426.0000 | 261.3000 | 2702.0000 | 0.0000 | 2922.2236 |
| 6428.0000 | 281.7000 | 2702.0000 | 10.0000 | 2953.2183 |
| 6430.0000 | 261.3000 | 2685.0000 | 0.0000 | 2905.2236 |
| 6432.0000 | 271.0000 | 2694.0000 | 10.0000 | 2936.1999 |
| 6435.0000 | 281.0000 | 2695.0000 | 10.0000 | 2945.6276 |
| 6439.0000 | 271.3000 | 2693.0000 | 10.0000 | 2935.4520 |
| 6443.0000 | 241.9500 | 2695.0000 | 0.0000 | 2898.9155 |
| 6447.0000 | 322.6000 | 2686.0000 | 0.0000 | 2957.8873 |
| 6451.0000 | 261.6000 | 2691.0000 | 0.0000 | 2911.4765 |
| 6453.0000 | 322.0000 | 2690.0000 | 0.0000 | 2961.3816 |
| 6455.0000 | 271.7000 | 2815.0000 | 10.0000 | 3057.7874 |
| 6456.0000 | 297.9000 | 2805.0000 | 0.0000 | 3056.0701 |
| 6457.0000 | 291.8000 | 2866.0000 | 0.0000 | 3111.9290 |
| 6458.0000 | 301.9000 | 2857.0000 | 10.0000 | 3125.2397 |
| 6458.5039 | 282.0000 | 2857.0000 | 0.0000 | 3094.6696 |
| 6476.5000 | 0.0000 | 0.0000 | 0.0000 | 0.0000 |
| 6511.0000 | 273.0000 | 2589.0000 | 0.0000 | 2819.0844 |
| 6535.0000 | 311.0000 | 2685.0000 | 0.0000 | 2947.1108 |
| 6559.0000 | 352.0000 | 2683.0000 | 0.0000 | 2979.6656 |
| 6583.0000 | 362.0000 | 2870.0000 | 0.0000 | 3175.0936 |
| 6607.0000 | 331.0000 | 2780.0000 | 0.0000 | 3058.9668 |
| 6631.0000 | 351.0000 | 2953.0000 | 0.0000 | 3248.8228 |
| 6655.0000 | 331.0000 | 2966.0000 | 0.0000 | 3244.9668 |
| 6679.0000 | 339.0000 | 2858.0000 | 0.0000 | 3143.7092 |

DAVIS OIL
LOGAN FEDERAL 1

TESTED 1983 JULY 22 -26
ANALYZED 1983 AUG 5

NERAL FILE: LOGAN_GEN
ALYSIS FILE: LOGAN_AN

T I S

TIME-RATE DATA

| TIME HOURS | OIL-RATE STB/DAY | GAS RATE MSCF/DAY | WATER RATE BBL/DAY | SAND FACE RATE STD MCF/DAY |
|---|---|---|---|---|
| 6739.0000 | 0.0000 | 0.0000 | 0.0000 | 0.0000 |
| 6807.0000 | 280.0000 | 2481.0000 | 0.0000 | 2716.9840 |
| 6823.0000 | 311.0000 | 2617.0000 | 0.0000 | 2879.1108 |
| 6847.0000 | 338.0000 | 2916.0000 | 0.0000 | 3200.8664 |
| 6871.0000 | 323.0000 | 2506.0000 | 0.0000 | 2778.2244 |
| 6895.0000 | 318.0000 | 3013.0000 | 0.0000 | 3281.0104 |
| 6919.0000 | 307.0000 | 2597.0000 | 0.0000 | 2855.7396 |
| 6943.0000 | 303.0000 | 2695.0000 | 0.0000 | 2950.3684 |
| 6967.0000 | 295.0000 | 2700.0000 | 0.0000 | 2948.6260 |
| 6991.0000 | 291.0000 | 2699.0000 | 0.0000 | 2944.2548 |
| 7015.0000 | 287.0000 | 2657.0000 | 0.0000 | 2898.8836 |
| 7039.0000 | 295.0000 | 2624.0000 | 0.0000 | 2872.6260 |
| 7063.0000 | 281.0000 | 2652.0000 | 0.0000 | 2888.8268 |
| 7087.0000 | 298.0000 | 2588.0000 | 0.0000 | 2839.1544 |
| 7111.0000 | 325.0000 | 3159.0000 | 0.0000 | 3432.9100 |
| 7135.0000 | 352.0000 | 3060.0000 | 0.0000 | 3356.6656 |
| 7254.0000 | 0.0000 | 0.0000 | 0.0000 | 0.0000 |
| 7279.0000 | 243.0000 | 1854.0000 | 0.0000 | 2058.8004 |
| 7327.0000 | 0.0000 | 0.0000 | 0.0000 | 0.0000 |
| 7759.0000 | 320.0000 | 2958.5000 | 2.5000 | 3231.6106 |
| 7802.5000 | 0.0000 | 0.0000 | 0.0000 | 0.0000 |
| 7807.0000 | 224.0000 | 2021.0000 | 0.0000 | 2209.7872 |
| 7831.0000 | 0.0000 | 0.0000 | 0.0000 | 0.0000 |
| 7855.0000 | 179.0000 | 1356.0000 | 2.0000 | 1509.5908 |
| 7879.0000 | 200.0000 | 1912.0000 | 2.0000 | 2083.2891 |
| 7999.0000 | 244.0000 | 2037.0000 | 2.0000 | 2245.3697 |
| 8119.0000 | 262.0000 | 2170.0000 | 3.6000 | 2395.7166 |
| 8137.0000 | 0.0000 | 0.0000 | 0.0000 | 0.0000 |
| 8163.0000 | 262.8000 | 2170.8000 | 3.6000 | 2397.1891 |
| 8263.0000 | 238.7000 | 1530.9000 | 2.5000 | 1735.4773 |
| 8281.0000 | 0.0000 | 0.0000 | 0.0000 | 0.0000 |
| 8287.0000 | 243.0000 | 2182.0000 | 3.0000 | 2390.8807 |
| 8359.0000 | 0.0000 | 0.0000 | 0.0000 | 0.0000 |
| 8383.0000 | 243.0000 | 2182.0000 | 3.0000 | 2390.8776 |
| 8417.0000 | 291.6000 | 2527.0000 | 0.0000 | 2772.7605 |
| 8418.0000 | 286.6000 | 2523.0000 | 0.0000 | 2764.5465 |
| 8419.0000 | 196.1000 | 2520.0000 | 0.0000 | 2685.2731 |
| 8420.0000 | 296.6000 | 2515.0000 | 0.0000 | 2764.9745 |

0

DAVIS OIL
LOGAN FEDERAL 1

TESTED 1983 JULY 22 -26
ANALYZED 1983 AUG 5

ENERAL FILE: LOGAN_GEN
NALYSIS FILE: LOGAN_AN

T I S

TIME-RATE DATA

| TIME HOURS | OIL-RATE STB/DAY | GAS RATE MSCF/DAY | WATER RATE BBL/DAY | SAND FACE RATE STD MCF/DAY |
|---|---|---|---|---|
| 8423.0000 | 246.4000 | 2491.0000 | 0.0000 | 2698.6659 |
| 8424.0000 | 326.6000 | 2561.0000 | 0.0000 | 2836.2585 |
| 8425.0000 | 236.2000 | 4200.0000 | 6.0000 | 4407.2210 |
| 8426.0000 | 442.2000 | 4212.0000 | 0.0000 | 4584.6862 |
| 8427.0000 | 256.4000 | 4196.0000 | 5.0100 | 4418.9004 |
| 8428.0000 | 447.8000 | 4178.0000 | 0.0000 | 4555.4058 |
| 8429.0000 | 608.8000 | 4162.0000 | 0.0000 | 4675.0966 |
| 8430.0000 | 443.6000 | 4163.0000 | 10.0200 | 4550.4787 |
| 8431.0000 | 453.7000 | 4157.0000 | 0.0000 | 4539.3784 |
| 8432.0000 | 443.6000 | 4157.0000 | 0.0000 | 4530.8661 |
| 8433.0000 | 675.4000 | 6566.0000 | 0.0000 | 7135.2271 |
| 8434.0000 | 675.8000 | 6567.0000 | 0.0000 | 7136.5642 |
| 8435.0000 | 676.2000 | 6568.0000 | 5.0100 | 7144.7074 |
| 8436.0000 | 685.9000 | 6586.0000 | 5.0100 | 7170.8825 |
| 8437.0000 | 665.8000 | 6579.0000 | 0.0000 | 7140.1362 |
| 8438.0000 | 706.1000 | 6583.0000 | 0.0000 | 7178.1011 |
| 8439.0000 | 771.6600 | 6576.0000 | 10.0200 | 7239.9667 |
| 8440.0000 | 675.8400 | 6557.0000 | 0.0000 | 7126.5980 |
| 8441.0000 | 665.3500 | 6541.0000 | 0.0000 | 7101.7570 |
| 8442.0000 | 654.8000 | 6534.0000 | 0.0000 | 7085.8654 |
| 8443.0000 | 725.3300 | 6548.0000 | 15.0300 | 7179.7249 |
| 8444.0000 | 654.4300 | 6568.0000 | 0.0000 | 7119.5536 |
| 8445.0000 | 679.5900 | 6528.0000 | 10.0200 | 7114.3694 |
| 8446.0000 | 673.3500 | 6521.0000 | 0.0000 | 7088.4994 |
| 8447.0000 | 740.0000 | 6522.0000 | 0.0000 | 7145.6720 |
| 8448.0000 | 604.0800 | 6514.0000 | 15.0300 | 7043.5346 |
| 8449.0000 | 659.4600 | 6514.0000 | 0.0000 | 7069.7929 |
| 8449.9728 | 649.4000 | 6514.0000 | 10.0200 | 7074.9248 |
| 8449.9739 | 0.0000 | 0.0000 | 0.0000 | 0.0000 |
| 8449.9767 | 0.0000 | 0.0000 | 0.0000 | 0.0000 |
| 8449.9794 | 0.0000 | 0.0000 | 0.0000 | 0.0000 |
| 8449.9822 | 0.0000 | 0.0000 | 0.0000 | 0.0000 |
| 8449.9850 | 0.0000 | 0.0000 | 0.0000 | 0.0000 |
| 8449.9933 | 0.0000 | 0.0000 | 0.0000 | 0.0000 |
| 8450.0017 | 0.0000 | 0.0000 | 0.0000 | 0.0000 |
| 8450.0100 | 0.0000 | 0.0000 | 0.0000 | 0.0000 |
| 8450.0183 | 0.0000 | 0.0000 | 0.0000 | 0.0000 |
| 8450.0350 | 0.0000 | 0.0000 | 0.0000 | 0.0000 |

0

DAVIS OIL
LOGAN FEDERAL 1

TESTED 1983 JULY 22 -26
ANALYZED 1983 AUG 5

ENERAL FILE: LOGAN_GEN
.NALYSIS FILE: LOGAN_AN

T I S

TIME-RATE DATA

| TIME HOURS | OIL-RATE STB/DAY | GAS RATE MSCF/DAY | WATER RATE BBL/DAY | SAND FACE RATE STD MCF/DAY |
|---|---|---|---|---|
| 8450.0850 | 0.0000 | 0.0000 | 0.0000 | 0.0000 |
| 8450.1178 | 0.0000 | 0.0000 | 0.0000 | 0.0000 |
| 8450.1344 | 0.0000 | 0.0000 | 0.0000 | 0.0000 |
| 8450.1511 | 0.0000 | 0.0000 | 0.0000 | 0.0000 |
| 8450.1678 | 0.0000 | 0.0000 | 0.0000 | 0.0000 |
| 8450.2011 | 0.0000 | 0.0000 | 0.0000 | 0.0000 |
| 8450.2344 | 0.0000 | 0.0000 | 0.0000 | 0.0000 |
| 8450.2681 | 0.0000 | 0.0000 | 0.0000 | 0.0000 |
| 8450.3011 | 0.0000 | 0.0000 | 0.0000 | 0.0000 |
| 8450.3344 | 0.0000 | 0.0000 | 0.0000 | 0.0000 |
| 8450.3681 | 0.0000 | 0.0000 | 0.0000 | 0.0000 |
| 8450.4011 | 0.0000 | 0.0000 | 0.0000 | 0.0000 |
| 8450.4344 | 0.0000 | 0.0000 | 0.0000 | 0.0000 |
| 8450.4681 | 0.0000 | 0.0000 | 0.0000 | 0.0000 |
| 8450.4972 | 0.0000 | 0.0000 | 0.0000 | 0.0000 |
| 8450.5472 | 0.0000 | 0.0000 | 0.0000 | 0.0000 |
| 8450.5972 | 0.0000 | 0.0000 | 0.0000 | 0.0000 |
| 8450.6472 | 0.0000 | 0.0000 | 0.0000 | 0.0000 |
| 8450.6972 | 0.0000 | 0.0000 | 0.0000 | 0.0000 |
| 8450.7472 | 0.0000 | 0.0000 | 0.0000 | 0.0000 |
| 8450.7972 | 0.0000 | 0.0000 | 0.0000 | 0.0000 |
| 8450.8472 | 0.0000 | 0.0000 | 0.0000 | 0.0000 |
| 8450.8972 | 0.0000 | 0.0000 | 0.0000 | 0.0000 |
| 8450.9472 | 0.0000 | 0.0000 | 0.0000 | 0.0000 |
| 8450.9908 | 0.0000 | 0.0000 | 0.0000 | 0.0000 |
| 8451.1575 | 0.0000 | 0.0000 | 0.0000 | 0.0000 |
| 8451.3242 | 0.0000 | 0.0000 | 0.0000 | 0.0000 |
| 8452.4908 | 0.0000 | 0.0000 | 0.0000 | 0.0000 |
| 8452.6575 | 0.0000 | 0.0000 | 0.0000 | 0.0000 |
| 8452.9908 | 0.0000 | 0.0000 | 0.0000 | 0.0000 |
| 8453.3242 | 0.0000 | 0.0000 | 0.0000 | 0.0000 |
| 8453.6575 | 0.0000 | 0.0000 | 0.0000 | 0.0000 |
| 8453.9908 | 0.0000 | 0.0000 | 0.0000 | 0.0000 |
| 8455.0000 | 0.0000 | 0.0000 | 0.0000 | 0.0000 |
| 8456.0000 | 0.0000 | 0.0000 | 0.0000 | 0.0000 |
| 8457.0000 | 0.0000 | 0.0000 | 0.0000 | 0.0000 |
| 8458.0000 | 0.0000 | 0.0000 | 0.0000 | 0.0000 |
| 8459.0000 | 0.0000 | 0.0000 | 0.0000 | 0.0000 |

0

DAVIS OIL
LOGAN FEDERAL 1

TESTED 1983 JULY 22 -26
ANALYZED 1983 AUG 5

ENERAL FILE: LOGAN_GEN
NALYSIS FILE: LOGAN_AN

T I S

TIME-RATE DATA

| TIME HOURS | OIL-RATE STB/DAY | GAS RATE MSCF/DAY | WATER RATE BBL/DAY | SAND FACE RATE STD MCF/DAY |
|---|---|---|---|---|
| 8465.0000 | 0.0000 | 0.0000 | 0.0000 | 0.0000 |
| 8467.0000 | 0.0000 | 0.0000 | 0.0000 | 0.0000 |
| 8471.0000 | 0.0000 | 0.0000 | 0.0000 | 0.0000 |
| 8475.0000 | 0.0000 | 0.0000 | 0.0000 | 0.0000 |
| 8479.0000 | 0.0000 | 0.0000 | 0.0000 | 0.0000 |
| 8483.0000 | 0.0000 | 0.0000 | 0.0000 | 0.0000 |
| 8487.0000 | 0.0000 | 0.0000 | 0.0000 | 0.0000 |
| 8491.0000 | 0.0000 | 0.0000 | 0.0000 | 0.0000 |
| 8495.0000 | 0.0000 | 0.0000 | 0.0000 | 0.0000 |
| 8499.0000 | 0.0000 | 0.0000 | 0.0000 | 0.0000 |
| 8503.0000 | 0.0000 | 0.0000 | 0.0000 | 0.0000 |
| 8507.0000 | 0.0000 | 0.0000 | 0.0000 | 0.0000 |
| 8511.0000 | 0.0000 | 0.0000 | 0.0000 | 0.0000 |
| 8515.0000 | 0.0000 | 0.0000 | 0.0000 | 0.0000 |
| 8519.0000 | 0.0000 | 0.0000 | 0.0000 | 0.0000 |
| 8522.0000 | 0.0000 | 0.0000 | 0.0000 | 0.0000 |

T I S

PLOTS

DAVIS OIL
LOGAN FEDERAL 1

# OTIS

PRELIMINARY FIELD ANALYSIS

TESTED 1983 JULY 22 -26
ANALYZED 1983 AUG 5

ANALYSIS FILE -LOGAN_AN

GENERAL FILE -

LOG(DELTA TIME-hrs) vs LOG(DELTA M(P))

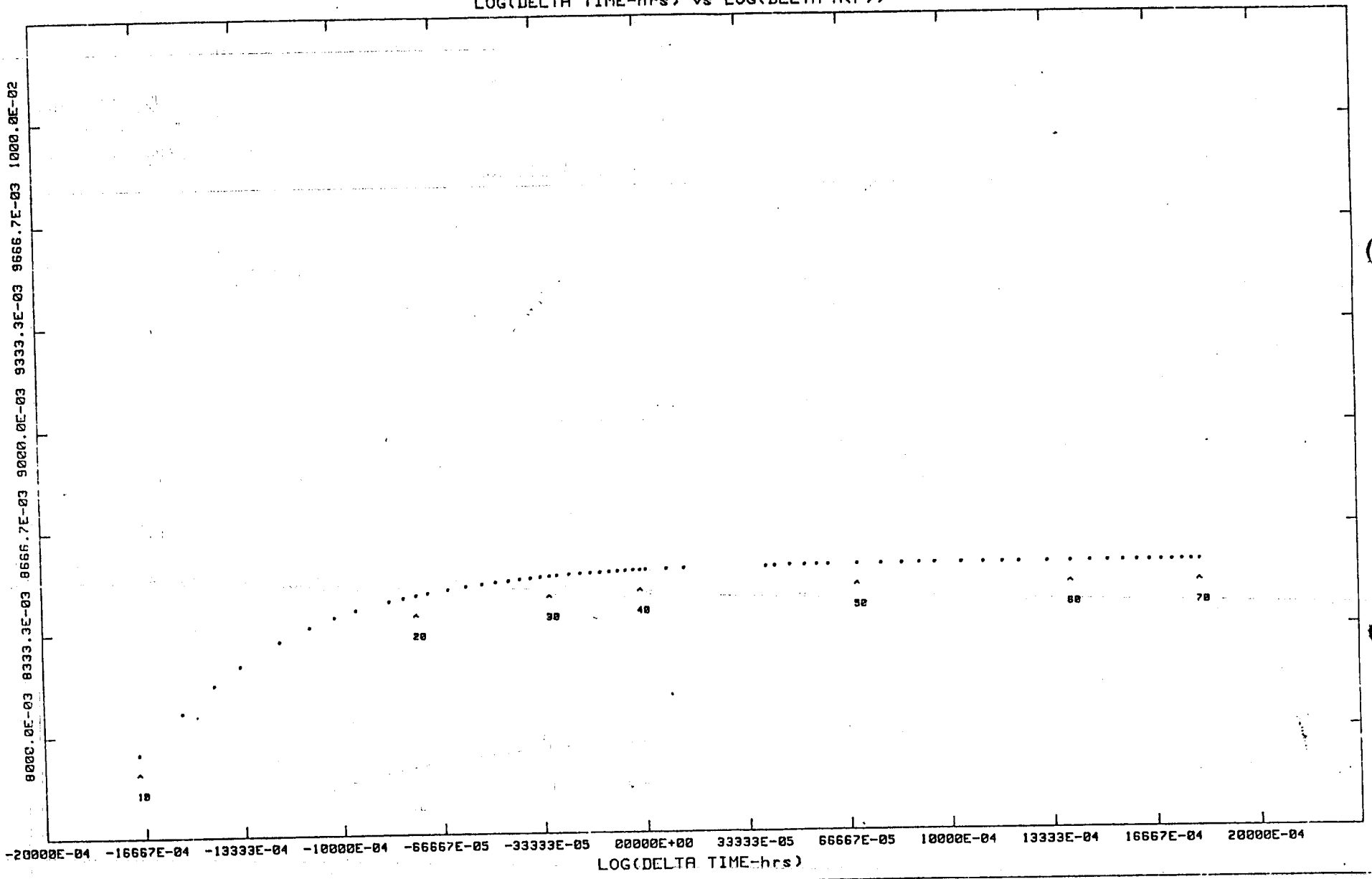

DAVIS OIL
LOGAN FEDERAL 1

ANALYSIS FILE -LOGAN_AN

# OTIS

PRELIMINARY FIELD ANALYSIS

TESTED 1983 JUL 22 - 26
ANALYZED 1983 AUG 5

GENERAL FILE -

TIME, Hours vs PRESSURE - PSIA

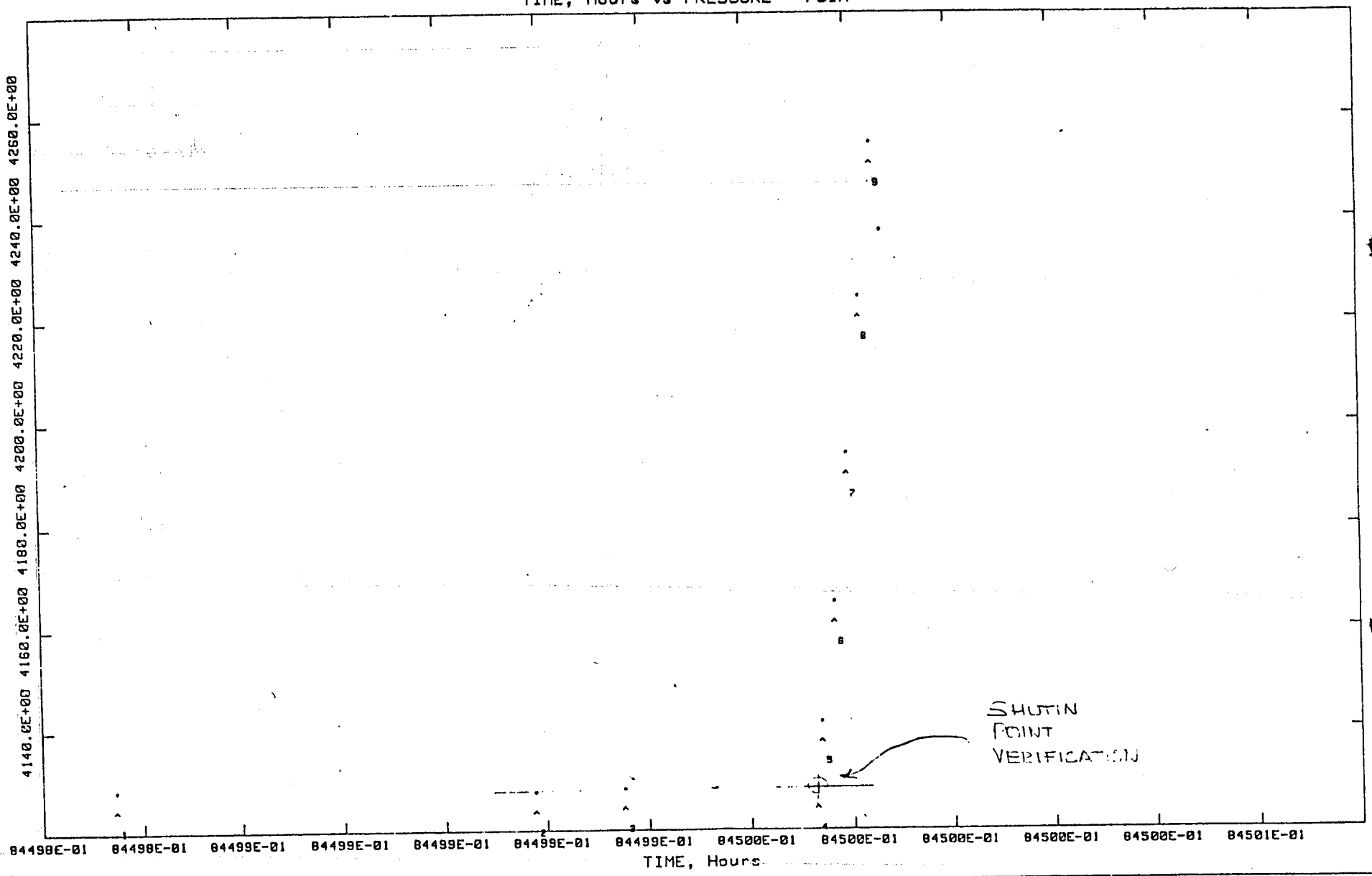

DAVIS OIL COMPAI

410 — 17TH STREET, SUITE 1400
DENVER, COLORADO 80202-4472
TELEPHONE: 303-623-1000

NEW ORLEANS
HOUSTON
TULSA

RECEIVED
SEP 21 1983
DIVISION OF
OIL, GAS & MINING

September 19, 1983

Mr. Jim Shirazi, Director
Utah Division of Oil, Gas and Mining
4241 State Office Building
Salt Lake City, UT 84114

Attn: Norm Stout

File: SRS-326-031.131

Re: Cause #203-1
Establishment of 80 Acre
Drilling and Spacing Units
For the North Pineview Field
of Summit County, Utah

Dear Mr. Shirazi:

The Utah Board of Oil, Gas and Mining entered into an order October 29, 1982, establishing 80 acre drilling and spacing units for the below described area:

T3N-R7E, Summit County, Utah

| | |
|---|---|
| Section 25 | W/2 |
| Section 26 | All |
| Section 35 | N/2 |
| Section 36 | NW/4 |

Paragraph 4 of the order states:

"4. The operator of each well shall be required to take a bottom hole pressure test for each well every thirty (30) days and promptly report the results to the Division of Oil, Gas and Mining until further Order of this Board."

Deliveries from the #1 Logan Federal (SE NE 26-T3N-R7E), commenced on April 6, 1983 at a rate of 2567 Mcfd and 233 bcpd. On September 6, 1983, the well was shut-in for a bottom hole pressure buildup survey after cumulating an estimated 346,539 Mcf (2567 Mcfd average for 135 days), and 39,981 bbls (296 bcpd average for 135 days). The results of this survey are attached hereto and presented below:

Initial reservoir pressure @12865' = 5022.85 psia
(midpoint of perforations)

Reservoir pressure from buildup of
9/6/83 = 4956.34 psia @12,726
calculated at 12865' (.144 psi/ft) = 4976.4 psia

Calculated loss in reservoir pressure = 46.4 psia

Reservoir Pressure History

| Date | Pressure @ 12865' | Cumulative Mcf | Production Bbls |
|---|---|---|---|
| 8/29/82 | 5022.85 | Initial | Pressure |
| 5/1/83 | 5000.58 | 65,346 | 7,276 |
| 5/31/83 | 4994.70 | 130,284 | 14,249 |
| 7/23/83 | 4983.38 | 235,786 | 25,996 |
| 9/6/83 | 4976.45 | 346,539 | 39,981 |

Paragraph 5 of the order states:

"5. Until a pressure maintenance system is approved by this Board and placed in operation for any well, production of gas and condensate from each such well within the spaced area may not exceed 350 barrels of condensate per day and 4 million cubic feet of gas per day, as long as the reservoir pressure is 150 psi or more above the retrograde dew point. If any bottom hole pressure test referred to above shows that the reservoir pressure is less than 150 psi above the retrograde dew point, all production from such well shall forthwith cease and said well shall be shut-in until the pressure in the well separately measured can be maintained at least 150 psi above the dew point, or until further Order of this Board."

Dew point pressure from Core Laboratory
study of 10/5/82 = 4731 psig = 4743 psia = 4743 psia

Dew point pressure +150 psi = 4893 psia

Reservoir pressure (7/23/83) = 4976

The #1 Logan Federal remains 83 psi above the pressure limit set by the Utah Board.

Paragraph 6 of the order states:

"6. The operator of the Logan Federal No. 1 discovery well is ordered to obtain a further sample of the reservoir fluid and have the same tested to measure and confirm the actual dew point of the retrograde reservoir."

Fluid samples were taken from the #1 Logan Federal just prior to shutting the well in on 5/1/83 and were forwarded to Core Laboratories, Dallas, Texas for analysis. This fluid sample appeared to be contaminated, therefore three fluid samples were taken prior to the July 23, 1983 shut-in and are currently being evaluated by Core Laboratories, Dallas, Texas. Our latest conversation with Core Laboratories indicates the fluid analysis will be completed in the next two weeks.

If you have any questions, please advise.

Yours very truly,

DAVIS OIL COMPANY

SR Smith

Stephan R Smith
Chief Engineer

SRS:ee
Attachments

cc: Bob McDonald
Jim Schumacher
Lynn Belcher
Don Rasmussen
Paul Messinger
Ed Lafaye
R.G. Giles, Amoco Production Co.

7501 STEMMONS FREEWAY, BOX 47547, DALLAS, TEXAS 75247 · 214/631-8270

CORE LABORATORIES, INC.

P. L. Moses
Manager
Reservoir Fluid Analysis

October 12, 1983

Davis Oil Company
410 17th Street, Suite 1400
Denver, CO 80202

Attention: Mr. Steve Smith

Subject: Partial Study
Logan Federal No. 1 Well
Pineview Field
Summit County, Utah
RFL 830541

Gentlemen:

Samples of gases and liquids were collected from the LTX Unit of the subject well by a representative of Core Laboratories, Inc. during three production rates. Presented in the following report are the results of the requested study.

The opening pressures of the gases and the ambient bubble point pressures of the liquids were determined in our laboratory. These results are tabulated on pages two, six and ten.

The compositions of the sales gases were analyzed by gas chromatography. The two liquids from the LTX Unit were blended together in the ratio of their gravities to the stock tank gravity. This was done for all three rates. The hydrocarbon composition of the blended liquids were determined through hexanes with a heptanes plus fraction. The shrinkages of the blended liquids were determined at the three rates in the laboratory, and these shrinkages were used to calculate the gas/liquid ratio based on the separator liquid rate. These ratios were used with the gas and liquid analyses to calculate the well stream composition.

The gas and the liquid samples were physically recombined to their producing gas/liquid ratio in the visual cell at 220°F. During the constant composition expansion at this temperature, the retrograde dew point was observed for all three rates.

We thank you for the opportunity to be of service to Davis Oil Company. Should you have any questions concerning the data, please do not hesitate to contact us.

Very truly yours,

CORE LABORATORIES, INC.

James R. Fortner

James R. Fortner
Area Manager
Reservoir Fluid Analysis

JRF:SW:mc
7 cc: Addressee

**CORE LABORATORIES, INC.**
*Reservoir Fluid Analysis*



File RFL 830541

Company Davis Oil Company — Date Sampled July 22, 1983

Well Logan Federal No. 1 — County Summit

Field Pineview — State Utah

## FORMATION CHARACTERISTICS

| | | |
|---|---|---|
| Formation Name | | |
| Date First Well Completed | | |
| Original Reservoir Pressure | PSIG @ | Ft. |
| Original Produced Gas/Liquid Ratio | | SCF/Bbl |
| Production Rate | | Bbls/Day |
| Separator Pressure and Temperature | PSIG | °F. |
| Liquid Gravity at 60°F. | | °API |
| Datum | | Ft. Subsea |

## WELL CHARACTERISTICS

| | | |
|---|---|---|
| Elevation | | Ft. |
| Total Depth | | Ft. |
| Producing Interval | | Ft. |
| Tubing Size and Depth | In. to | Ft. |
| Open Flow Potential | | MMSCF/Day |
| Last Reservoir Pressure | 5012 PSIG @ | Ft. |
| Date | | |
| Reservoir Temperature | 220 °F. @ | Ft. |
| Status of Well | | |
| Pressure Gauge | | |

## SAMPLING CONDITIONS

| | | |
|---|---|---|
| Flowing Tubing Pressure on 13/64 inch choke* | 2900 | PSIG |
| Flowing Bottom Hole Pressure | | PSIG |
| Primary Separator Pressure | 500 | PSIG |
| Primary Separator Temperature | 72 | °F. |
| Secondary Separator Pressure | 72 | PSIG |
| Secondary Separator Temperature | 46 | °F. |
| Field Stock Tank Liquid Gravity | 57.5 | °API @ 60°F. |
| Primary Separator Gas Production Rate | 2291.85 | MSCF/Day |
| Pressure Base | 15.025 | PSIA |
| Temperature Base | 60 | °F. |
| Compressibility Factor ($F_{pv}$) | 1.0426 | |
| Gas Gravity (Laboratory) | 0.693 | |
| Gas Gravity Factor ($F_g$) | 1.2012 | |
| Stock Tank Liquid Production Rate @ 60°F. | 268.8 | Bbls/Day |
| Primary Separator Gas/Stock Tank Liquid Ratio | 8526 | SCF/Bbl |
| or | 117.3 | Bbls/MMSCF |
| Sampled by | Core Laboratories, Inc. | |

REMARKS: *Rate No. 1 samples were taken at 1600 hours.

These analyses, opinions or interpretations are based on observations and material supplied by the client to whom, and for whose exclusive and confidential use, this report is made. The interpretations or opinions expressed represent the best judgement of Core Laboratories, Inc. (all errors and omissions excepted); but Core Laboratories, Inc. and its officers and employees, assume no responsibility and make no warranty or representations as to the productivity, proper operation, or profitableness of any oil, gas or other mineral well or sand in connection with which such report is used or relied upon.

File RFL 830541

Well Logan Federal No. 1

## SUMMARY OF SAMPLES RECEIVED IN THE LABORATORY*

### Separator Gas

| | Separator Conditions | | Laboratory Opening Conditions | |
|---|---|---|---|---|
| Cylinder Number | Pressure, PSIG | Temperature, °F. | Pressure, PSIG | Temperature, °F. |
| 611 | 500 | 72 | 480 | 71 |
| 541 | 500 | 72 | 485 | 71 |

### Separator Liquid

| | Separator Conditions | | Laboratory Bubble Point Pressure | |
|---|---|---|---|---|
| Cylinder Number | Pressure, PSIG | Temperature, °F. | Pressure, PSIG | Temperature, °F. |
| 2100** | 500 | 72 | 496 | 70 |
| 2126*** | 500 | 72 | 482 | 71 |

*Rate No. 1.
**Taken at the LTX sightglass.
***Combined fluid.

These analyses, opinions or interpretations are based on observations and material supplied by the client to whom, and for whose exclusive and confidential use, this report is made. The interpretations or opinions expressed represent the best judgement of Core Laboratories, Inc. (all errors and omissions excepted); but Core Laboratories, Inc. and its officers and employees, assume no responsibility and make no warranty or representations as to the productivity, proper operation, or profitableness of any oil, gas or other mineral well or sand in connection with which such report is used or relied upon.

File RFL 830541

Well Logan Federal No. 1

## HYDROCARBON ANALYSES OF SEPARATOR PRODUCTS AND CALCULATED WELL STREAM*

| Component | Separator Liquid, Mol Percent | Separator Gas Mol Percent | Separator Gas GPM | Well Stream Mol Percent | Well Stream GPM |
|---|---|---|---|---|---|
| Hydrogen Sulfide | 0.00 | 0.00 | | 0.00 | |
| Carbon Dioxide | 0.40 | 0.93 | | 0.84 | |
| Nitrogen | 0.07 | 2.17 | | 1.82 | |
| Methane | 12.74 | 79.14 | | 68.13 | |
| Ethane | 13.72 | 12.19 | 3.324 | 12.44 | 3.392 |
| Propane | 17.10 | 4.22 | 1.184 | 6.36 | 1.785 |
| iso-Butane | 5.44 | 0.56 | 0.187 | 1.37 | 0.457 |
| n-Butane | 8.29 | 0.58 | 0.186 | 1.86 | 0.598 |
| iso-Pentane | 3.60 | 0.09 | 0.034 | 0.67 | 0.250 |
| n-Pentane | 3.89 | 0.08 | 0.030 | 0.71 | 0.262 |
| Hexanes | 4.43 | 0.03 | 0.012 | 0.76 | 0.316 |
| Heptanes plus | 30.32 | 0.01 | 0.005 | 5.04 | 3.000 |
| | 100.00 | 100.00 | 4.962 | 100.00 | 10.060 |

| Properties of Heptanes plus | | | |
|---|---|---|---|
| API gravity @ 60°F. | 45.9 | | |
| Density, Gm/Cc @ 60°F. | 0.7967 | | 0.797 |
| Molecular weight | 147 | 103 | 147 |

Calculated separator gas gravity (air=1.000) = 0.693
Calculated gross heating value for separator gas = 1193 BTU per cubic foot of dry gas @ 15.025 psia and 60°F.

Primary separator gas collected @ 500 psig and 72°F.
Primary separator liquid collected @ 500 psig and 72°F.

Primary separator gas/separator liquid ratio = 5547 SCF/Bbl @ 72°F.
Primary separator liquid/stock tank liquid ratio = 1.537 Bbls @ 72°F./Bbl
Primary separator gas/well stream ratio = 834.11 MSCF/MMSCF
Stock tank liquid/well stream ratio = 97.8 Bbls/MMSCF

*Rate No. 1.

These analyses, opinions or interpretations are based on observations and material supplied by the client to whom, and for whose exclusive and confidential use, this report is made. The interpretations or opinions expressed represent the best judgement of Core Laboratories, Inc. (all errors and omissions excepted); but Core Laboratories, Inc. and its officers and employees, assume no responsibility and make no warranty or representations as to the productivity, proper operation, or profitableness of any oil, gas or other mineral well or sand in connection with which such report is used or relied upon.

File RFL 830541

Well Logan Federal No. 1

## PRESSURE-VOLUME RELATIONS OF RESERVOIR FLUID AT 220°F.*
(Constant Composition Expansion)

| Pressure, PSIG | | Relative Volume |
|---|---|---|
| 7000 | | 0.8241 |
| 6500 | | 0.8462 |
| 6000 | | 0.8716 |
| 5500 | | 0.8993 |
| 5100 | | 0.9292 |
| 5012 | Reservoir Pressue | 0.9380 |
| 4800 | | 0.9537 |
| 4600 | | 0.9728 |
| 4500 | | 0.9835 |
| 4400 | | 0.9937 |
| 4359 | Dew Point | 1.0000 |
| 4300 | | 1.0069 |
| 4200 | | 1.0193 |
| 4050 | | 1.0414 |
| 3850 | | 1.0755 |
| 3600 | | 1.1215 |
| 3300 | | 1.1974 |
| 3000 | | 1.2934 |
| 2700 | | 1.4181 |
| 2400 | | 1.5791 |
| 2100 | | 1.8087 |
| 1921 | | 1.9814 |
| 1600 | | 2.3995 |
| 1353 | | 2.8799 |
| 1170 | | 3.3729 |
| 1009 | | 3.9537 |
| 818 | | 4.9464 |
| 689 | | 5.9346 |

*Rate No. 1.

These analyses, opinions or interpretations are based on observations and material supplied by the client to whom, and for whose exclusive and confidential use, this report is made. The interpretations or opinions expressed represent the best judgement of Core Laboratories, Inc. (all errors and omissions excepted); but Core Laboratories, Inc. and its officers and employees, assume no responsibility and make no warranty or representations as to the productivity, proper operation, or profitableness of any oil, gas or other mineral well or sand in connection with which such report is used or relied upon.

**CORE LABORATORIES, INC.**
*Reservoir Fluid Analysis*



File RFL 830541

| | | | |
|---|---|---|---|
| Company | Davis Oil Company | Date Sampled | July 23, 1983 |
| Well | Logan Federal No. 1 | County | Summit |
| Field | Pineview | State | Utah |

## FORMATION CHARACTERISTICS

| | | |
|---|---|---|
| Formation Name | | |
| Date First Well Completed | | |
| Original Reservoir Pressure | PSIG @ | Ft. |
| Original Produced Gas/Liquid Ratio | | SCF/Bbl |
| Production Rate | | Bbls/Day |
| Separator Pressure and Temperature | PSIG | °F. |
| Liquid Gravity at 60°F. | | °API |
| Datum | | Ft. Subsea |

## WELL CHARACTERISTICS

| | | |
|---|---|---|
| Elevation | | Ft. |
| Total Depth | | Ft. |
| Producing Interval | | Ft. |
| Tubing Size and Depth | In. to | Ft. |
| Open Flow Potential | | MMSCF/Day |
| Last Reservoir Pressure | 5012 PSIG @ | Ft. |
| Date | | |
| Reservoir Temperature | 220 °F. @ | Ft. |
| Status of Well | | |
| Pressure Gauge | | |

## SAMPLING CONDITIONS

| | | |
|---|---|---|
| Flowing Tubing Pressure on 16/64 inch choke* | 2700 | PSIG |
| Flowing Bottom Hole Pressure | | PSIG |
| Primary Separator Pressure | 585 | PSIG |
| Primary Separator Temperature | 72 | °F. |
| Secondary Separator Pressure | 75 | PSIG |
| Secondary Separator Temperature | 42 | °F. |
| Field Stock Tank Liquid Gravity | 57.5 | °API @ 60°F. |
| Primary Separator Gas Production Rate | 3821.87 | MSCF/Day |
| Pressure Base | 15.025 PSIA | |
| Temperature Base | 60 °F. | |
| Compressibility Factor ($F_{pv}$) | 1.0494 | |
| Gas Gravity (Laboratory) | 0.689 | |
| Gas Gravity Factor ($F_g$) | 1.2047 | |
| Stock Tank Liquid Production Rate @ 60°F. | 470.4 | Bbls/Day |
| Primary Separator Gas/Stock Tank Liquid Ratio | 8125 | SCF/Bbl |
| or | 123.1 | Bbls/MMSCF |
| Sampled by | Core Laboratories, Inc. | |

REMARKS: *Rate No. 2 samples were taken at 2400 hours.

These analyses, opinions or interpretations are based on observations and material supplied by the client to whom, and for whose exclusive and confidential use, this report is made. The interpretations or opinions expressed represent the best judgement of Core Laboratories, Inc. (all errors and omissions excepted); but Core Laboratories, Inc. and its officers and employees, assume no responsibility and make no warranty or representations as to the productivity, proper operation, or profitableness of any oil, gas or other mineral well or sand in connection with which such report is used or relied upon.

File RFL 830541

Well Logan Federal No. 1

## SUMMARY OF SAMPLES RECEIVED IN THE LABORATORY*

### Separator Gas

| | Separator Conditions | | Laboratory Opening Conditions | |
|---|---|---|---|---|
| Cylinder Number | Pressure, PSIG | Temperature, °F. | Pressure, PSIG | Temperature, °F. |
| 535 | 585 | 72 | 575 | 71 |
| 610 | 585 | 72 | 560 | 71 |

### Separator Liquid

| | Separator Conditions | | Laboratory Bubble Point Pressure | |
|---|---|---|---|---|
| Cylinder Number | Pressure, PSIG | Temperature, °F. | Pressure, PSIG | Temperature, °F. |
| 2109** | 585 | 72 | 616 | 70 |
| 2122*** | 585 | 72 | 570 | 72 |

*Rate No. 2.
**Taken at the LTX sightglass.
***Combined fluid.

These analyses, opinions or interpretations are based on observations and material supplied by the client to whom, and for whose exclusive and confidential use, this report is made. The interpretations or opinions expressed represent the best judgement of Core Laboratories, Inc. (all errors and omissions excepted); but Core Laboratories, Inc. and its officers and employees, assume no responsibility and make no warranty or representations as to the productivity, proper operation, or profitableness of any oil, gas or other mineral well or sand in connection with which such report is used or relied upon.

File RFL 830541

Well Logan Federal No. 1

## HYDROCARBON ANALYSES OF SEPARATOR PRODUCTS AND CALCULATED WELL STREAM*

| Component | Separator Liquid, Mol Percent | Separator Gas Mol Percent | Separator Gas GPM | Well Stream Mol Percent | Well Stream GPM |
|---|---|---|---|---|---|
| Hydrogen Sulfide | 0.00 | 0.00 | | 0.00 | |
| Carbon Dioxide | 0.45 | 0.91 | | 0.83 | |
| Nitrogen | 0.06 | 2.20 | | 1.83 | |
| Methane | 15.17 | 79.70 | | 68.45 | |
| Ethane | 14.10 | 11.83 | 3.226 | 12.23 | 3.335 |
| Propane | 15.95 | 4.01 | 1.125 | 6.09 | 1.709 |
| iso-Butane | 5.11 | 0.54 | 0.180 | 1.34 | 0.447 |
| n-Butane | 7.56 | 0.56 | 0.180 | 1.78 | 0.572 |
| iso-Pentane | 3.41 | 0.09 | 0.034 | 0.67 | 0.250 |
| n-Pentane | 3.56 | 0.08 | 0.030 | 0.69 | 0.255 |
| Hexanes | 3.57 | 0.05 | 0.021 | 0.66 | 0.275 |
| Heptanes plus | 31.06 | 0.03 | 0.014 | 5.43 | 3.251 |
| | 100.00 | 100.00 | 4.810 | 100.00 | 10.094 |

| Properties of Heptanes plus | | | |
|---|---|---|---|
| API gravity @ 60°F. | 45.6 | | |
| Density, Gm/Cc @ 60°F. | 0.7980 | | 0.798 |
| Molecular weight | 148 | 103 | 148 |

Calculated separator gas gravity (air=1.000) = 0.689
Calculated gross heating value for separator gas = 1188 BTU per cubic foot of dry gas @ 15.025 psia and 60°F.

Primary separator gas collected @ 585 psig and 72°F.
Primary separator liquid collected @ 585 psig and 72°F.

Primary separator gas/separator liquid ratio = 5252 SCF/Bbl @ 72°F.
Primary separator liquid/stock tank liquid ratio = 1.547 Bbls @ 72°F./Bbl
Primary separator gas/well stream ratio = 825.82 MSCF/MMSCF
Stock tank liquid/well stream ratio = 101.7 Bbls/MMSCF

*Rate No. 2.

These analyses, opinions or interpretations are based on observations and material supplied by the client to whom, and for whose exclusive and confidential use, this report is made. The interpretations or opinions expressed represent the best judgement of Core Laboratories, Inc. (all errors and omissions excepted); but Core Laboratories, Inc. and its officers and employees, assume no responsibility and make no warranty or representations as to the productivity, proper operation, or profitableness of any oil, gas or other mineral well or sand in connection with which such report is used or relied upon.

File RFL 830541

Well Logan Federal No. 1

## PRESSURE-VOLUME RELATIONS OF RESERVOIR FLUID AT 220°F.*
(Constant Composition Expansion)

| Pressure, PSIG | | Relative Volume |
|---|---|---|
| 7000 | | 0.8374 |
| 6500 | | 0.8583 |
| 6000 | | 0.8836 |
| 5500 | | 0.9114 |
| 5200 | | 0.9331 |
| 5012 | Reservoir Pressure | 0.9491 |
| 4700 | | 0.9744 |
| 4600 | | 0.9843 |
| 4500 | | 0.9941 |
| 4453 | Dew Point | 1.0000 |
| 4400 | | 1.0062 |
| 4300 | | 1.0176 |
| 4150 | | 1.0383 |
| 3950 | | 1.0689 |
| 3700 | | 1.1137 |
| 3400 | | 1.1809 |
| 3100 | | 1.2708 |
| 2800 | | 1.3843 |
| 2500 | | 1.5399 |
| 2200 | | 1.7398 |
| 1900 | | 2.0204 |
| 1600 | | 2.4241 |
| 1300 | | 3.0321 |
| 1092 | | 3.6443 |
| 968 | | 4.1557 |
| 778 | | 5.2270 |
| 648 | | 6.2957 |

*Rate No. 2.

These analyses, opinions or interpretations are based on observations and material supplied by the client to whom, and for whose exclusive and confidential use, this report is made. The interpretations or opinions expressed represent the best judgement of Core Laboratories, Inc. (all errors and omissions excepted); but Core Laboratories, Inc. and its officers and employees, assume no responsibility and make no warranty or representations as to the productivity, proper operation, or profitableness of any oil, gas or other mineral well or sand in connection with which such report is used or relied upon.

File RFL 830541

Company Davis Oil Company | Date Sampled July 23, 1983

Well Logan Federal No. 1 | County Summit

Field Pineview | State Utah

## FORMATION CHARACTERISTICS

| | | | |
|---|---|---|---|
| Formation Name | | | |
| Date First Well Completed | | | |
| Original Reservoir Pressure | | PSIG @ | Ft. |
| Original Produced Gas/Liquid Ratio | | | SCF/Bbl |
| Production Rate | | | Bbls/Day |
| Separator Pressure and Temperature | | PSIG | °F. |
| Liquid Gravity at 60°F. | | | °API |
| Datum | | | Ft. Subsea |

## WELL CHARACTERISTICS

| | | | |
|---|---|---|---|
| Elevation | | | Ft. |
| Total Depth | | | Ft. |
| Producing Interval | | | Ft. |
| Tubing Size and Depth | | In. to | Ft. |
| Open Flow Potential | | | MMSCF/Day |
| Last Reservoir Pressure | 5012 | PSIG @ | Ft. |
| Date | | | |
| Reservoir Temperature | 220 | °F. @ | Ft. |
| Status of Well | | | |
| Pressure Gauge | | | |

## SAMPLING CONDITIONS

| | | | |
|---|---|---|---|
| Flowing Tubing Pressure on 21/64 inch choke* | | 2300 | PSIG |
| Flowing Bottom Hole Pressure | | | PSIG |
| Primary Separator Pressure | | 750 | PSIG |
| Primary Separator Temperature | | 88 | °F. |
| Secondary Separator Pressure | | 80 | PSIG |
| Secondary Separator Temperature | | 50 | °F. |
| Field Stock Tank Liquid Gravity | | 57.7 | °API @ 60°F. |
| Primary Separator Gas Production Rate | | 6059.75 | MSCF/Day |
| Pressure Base | 15.025 | PSIA | |
| Temperature Base | 60 | °F. | |
| Compressibility Factor ($F_{pv}$) | 1.0325 | | |
| Gas Gravity (Laboratory) | 0.688 | | |
| Gas Gravity Factor ($F_g$) | 1.2056 | | |
| Stock Tank Liquid Production Rate @ 60°F. | | 642.3 | Bbls/Day |
| Primary Separator Gas/Stock Tank Liquid Ratio | | 9434 | SCF/Bbl |
| or | | 106.0 | Bbls/MMSCF |
| Sampled by | | Core Laboratories, Inc. | |

REMARKS: *Rate No. 3 samples were taken at 0800 hours.

These analyses, opinions or interpretations are based on observations and material supplied by the client to whom, and for whose exclusive and confidential use, this report is made. The interpretations or opinions expressed represent the best judgement of Core Laboratories, Inc. (all errors and omissions excepted); but Core Laboratories, Inc. and its officers and employees, assume no responsibility and make no warranty or representations as to the productivity, proper operation, or profitableness of any oil, gas or other mineral well or sand in connection with which such report is used or relied upon.

File RFL 830541

Well Logan Federal No. 1

## SUMMARY OF SAMPLES RECEIVED IN THE LABORATORY*

### Separator Gas

| | Separator Conditions | | Laboratory Opening Conditions | |
|---|---|---|---|---|
| Cylinder Number | Pressure, PSIG | Temperature, °F. | Pressure, PSIG | Temperature, °F. |
| 517 | 750 | 88 | 770 | 71 |
| 528 | 750 | 88 | 770 | 71 |

### Separator Liquid

| | Separator Conditions | | Laboratory Bubble Point Pressure | |
|---|---|---|---|---|
| Cylinder Number | Pressure, PSIG | Temperature, °F. | Pressure, PSIG | Temperature, °F. |
| 2017** | 750 | 88 | 835 | 71 |
| 2012*** | 750 | 88 | 739 | 70 |

*Rate No. 3.
**Taken at the LTX sightglass.
***Combined fluid.

These analyses, opinions or interpretations are based on observations and material supplied by the client to whom, and for whose exclusive and confidential use, this report is made. The interpretations or opinions expressed represent the best judgement of Core Laboratories, Inc. (all errors and omissions excepted); but Core Laboratories, Inc. and its officers and employees, assume no responsibility and make no warranty or representations as to the productivity, proper operation, or profitableness of any oil, gas or other mineral well or sand in connection with which such report is used or relied upon.

DAVIS OIL COMPA

410 — 17TH STREET, SUITE 1400
DENVER, COLORADO 80202-4472
TELEPHONE: 303-623-1000

NEW ORLEANS
HOUSTON
TULSA

RECEIVED
OCT 20 1983
DIVISION OF
OIL, GAS & MINING

October 17, 1983

Mr. Jim Shirazi, Director
Utah Division of Oil, Gas and Mining
4241 State Office Building
Salt Lake City, UT 84114

Attn: Norm Stout

File: SRS-347-031.131

Re: Cause #203-1
Establishment of 80 Acre
Drilling and Spacing Units
For the North Pineview Field
of Summit County, Utah

Dear Mr. Shirazi:

The Utah Board of Oil, Gas and Mining entered into an order October 29, 1982, establishing 80 acre drilling and spacing units for the below described area:

T3N-R7E, Summit County, Utah

| | |
|---|---|
| Section 25 | W/2 |
| Section 26 | All |
| Section 35 | N/2 |
| Section 36 | NW/4 |

Paragraph 6 of the order states:

"6. The operator of the Logan Federal No. 1 discovery well is ordered to obtain a further sample of the reservoir fluid and have the same tested to measure and confirm the actual dew point of the retrograde reservoir."

Fluid samples were taken from the #1 Logan Federal just prior to shutting the well in on 5/1/83 and were forwarded to Core Laboratories, Dallas, Texas for analysis. This fluid sample appeared to be contaminated; therefore three fluid samples were taken prior to the July 23, 1983 shut-in.

Tabulated below are the results of these samples:

| Rate | | |
|---|---|---|
| Gas | Oil | Dew Point |
| 2291.85 Mcfd | 268.8 bcpd | 4359 psig |
| 3821.87 Mcfd | 470.4 bcpd | 4453 psig |
| 6059.75 Mcfd | 642.3 bcpd | 4560 psig |

The dew point obtained in October 1982 was 4731 psig.

Attached hereto is a copy of Core Laboratories' report.

If you have any questions, please advise.

Yours very truly,

DAVIS OIL COMPANY

SR Smith

Stephan R Smith
Chief Engineer

SRS:ee
Attachments

cc: Bob McDonald
Jim Schumacher
Lynn Belcher
Don Rasmussen
Paul Messinger
Ed Lafaye
R.G. Giles, Amoco Production Co.
John Dolan, American Quasar

DAVIS OIL COMPANY
1410 — 17TH STREET, SUITE 1400
DENVER, COLORADO 80202-4472
TELEPHONE: 303-623-1000

NEW ORLEANS
HOUSTON
TULSA

RECEIVED
NOV 1 1983
DIVISION OF
OIL, GAS & MINING

October 26, 1983

Mr. Jim Shirazi, Director
Utah Division of Oil, Gas and Mining
4241 State Office Building
Salt Lake City, UT 84114

Attn: Norm Stout

File: SRS-362-031.131

Re: Cause #203-1
Establishment of 80 Acre
Drilling and Spacing Units
For the North Pineview Field
of Summit County, Utah

Dear Mr. Shirazi:

The Utah Board of Oil, Gas and Mining entered into an order October 29, 1982, establishing 80 acre drilling and spacing units for the below described area:

T3N-R7E, Summit County, Utah

| | |
|---|---|
| Section 25 | W/2 |
| Section 26 | All |
| Section 35 | N/2 |
| Section 36 | NW/4 |

Paragraph 4 of the order states:

"4. The operator of each well shall be required to take a bottom hole pressure test for each well every thirty (30) days and promptly report the results to the Division of Oil, Gas and Mining until further Order of this Board."

Deliveries from the #1 Logan Federal (SE NE 26-T3N-R7E), commenced on April 6, 1983 at a rate of 2567 Mcfd and 233 bcpd. On October 5, 1983, the well was shut-in for a bottom hole pressure buildup survey after cumulating an estimated 398,132 Mcf (2619 Mcfd average for 152 days), and 45,856 bbls (302 bcpd average for 152 days). The results of this survey are attached hereto and presented below:

Initial reservoir pressure @12865' = 5022.85 psia
(midpoint of perforations)

Reservoir pressure from buildup of
10/5/83 = 4370.34 psia @8658'
calculated at 12865' (.144 psi/ft) = 4976.2 psia
(an obstruction in the tubing prevented the pressure bomb from going any deeper than 8658')

Calculated loss in reservoir pressure = 46.6 psia

Reservoir Pressure History

| Date | Pressure @ 12865' | Cumulative Mcf | Production Bbls |
|---|---|---|---|
| 8/29/82 | 5022.85 | Initial | Pressure |
| 5/1/83 | 5000.58 | 65,346 | 7,276 |
| 5/31/83 | 4994.70 | 130,284 | 14,249 |
| 7/23/83 | 4983.38 | 235,786 | 25,996 |
| 9/6/83 | 4976.45 | 346,539 | 39,981 |
| 10/5/83 | 4976.25 | 398,132 | 45,856 |

Paragraph 5 of the order states:

"5. Until a pressure maintenance system is approved by this Board and placed in operation for any well, production of gas and condensate from each such well within the spaced area may not exceed 350 barrels of condensate per day and 4 million cubic feet of gas per day, as long as the reservoir pressure is 150 psi or more above the retrograde dew point. If any bottom hole pressure test referred to above shows that the reservoir pressure is less than 150 psi above the retrograde dew point, all production from such well shall forthwith cease and said well shall be shut-in until the pressure in the well separately measured can be maintained at least 150 psi above the dew point, or until further Order of this Board."

| | |
|---|---|
| Dew point pressure from Core Laboratory study of 10/5/82 = 4731 psig = 4743 psia | = 4743 psia |
| Dew point pressure +150 psi | = 4893 psia |
| Reservoir pressure (10/5/83) | = 4976 |

The #1 Logan Federal remains 83 psi above the pressure limit set by the Utah Board.

If you have any questions, please advise.

Yours very truly,

DAVIS OIL COMPANY

SR Smith

Stephan R Smith
Chief Engineer

SRS:ee
Attachments

cc: Bob McDonald
Bill Cagle
Lynn Belcher
Don Rasmussen
Paul Messinger
Ed Lafaye
R.G. Giles, Amoco Production Co.
John Dolan, American Quasar

OTIS
7600 E. ORCHARD ROAD, SUITE 354
ENGLEWOOD, CO. 80111
303/694-3942

November 30, 1983

Mr. Steve Smith
Davis Oil Company
410 17th St., Suite 1400
Denver, CO 80202

Dear Steve:

This report contains the results (on page 2) of a radial flow analysis performed on the November test of the Logan #1. A list of this and previous results appear in a table on the following page.

As the table shows, the calculated initial pressure has remained above 4950 psia since beginning production. The smaller permeability and larger skin are probably associated with having a lower flowing bottom-hole pressure and a smaller radius of investigation.

The fluid properties listed on page 8 are calculated at 222°F the observed temperature, which is in close agreement with previous temperatures.

If there is a question concerning this report, call me at the above number.

Sincerely,

OTIS ENGINEERING CORPORATION

Terry Stevenson

Terry Stevenson
Well Test Analyst

ANALYSIS RESULTS ON LOGAN FEDERAL 1

| DATE | Pi entered psia | Px calculated psia | Datum feet | Puf psia | Qsf mscf/d | Qg mscf/d | Qo bbl/d | GOR scf/bbl | k md | Skin | Rsc fee |
|---|---|---|---|---|---|---|---|---|---|---|---|
| Aug 82 | 5017 | 5005 | 12726 | 4315 | 5850 | 5500 | 493 | 11156 | 45.06 | 97.13 | 248 |
| May 83 | 5017 | 4967 | 12650 | 4699 | 3079 | 2857 | 282 | 10131 | 32.90 | 50.35 | 150 |
| Jul 83 | 5017 | 4963 | 12726 | 4117 | 7075 | 6534 | 604 | 10810 | 38.31 | 84.81 | 174 |
| Sep 83 | 5017 | 4956 | 12726 | 4604 | 4117 | 3848 | 359 | 10720 | 46.62 | 71.28 | 117 |
| Oct 83 | 5017 | 4972 | 12726 | 4428 | 3790 | 3735 | 378 | 9860 | 45.41 | 57.40 | 141 |
| Nov 83 | 5017 | 4957 | 12726 | 3836 | 3642 | 3354 | 343 | 9778 | 25.59 | 140.99 | 86 |

DAVIS OIL COMPANY
LOGAN FEDERAL 1
SUMMIT COUNTY UTAH
TESTED 1983 NOV 16-18
ANALYZED 1983 NOV 29

O T I S

RESULTS OF PRELIMINARY LINEAR REGRESSION
USING
LINE SOURCE RADIAL FLOW MODEL

| | | |
|---|---|---|
| AVG. DEVIATION OF CALC PRESSURE | .2795 | PSI |
| INITIAL PRESSURE ENTERED | 5016.9 | PSIA |
| INITIAL M(P) ENTERED | 1.3852033449E+9 | PSIASQ/CP |
| INITIAL PRESSURE CALCULATED | 4952.699 | PSIA |
| INITIAL M(P) CALCULATED | 1.3594831E+9 | PSIASQ/CP |
| LAST FLOWING PRESSURE | 3836.31 | PSIA |
| AVERAGE PRESSURE | 4952.699 | PSIA |
| WELL RADIUS | .35417 | FEET |
| TOTAL COMPRESSIBILITY | 70.232 | V/MMV/PSI |
| AVG. VISCOSITY | .02491 | CENTIPOISE |
| POROSITY ENTERED | 11 | PERCENT |
| LAST QSF | 3642.42042006 | MCF/DAY |
| PERMEABILITY CALCULATED | 25.5895 | MILLIDARCIES |
| NET THICKNESS ENTERED | 48 | FEET |
| SKIN FACTOR CALCULATED | 140.99 | |
| COMPLETION EFFICIENCY | 6.76 | PER-CENT |
| NONDARCY FLOW CONSTANT CALCULATED | 0 | |
| AT 11275.0188889 HRS,DRAWDOWN RADIUS= | 20290 | FEET |
| DRAWDOWN AREA= | 29704.1 | ACRES |
| GAS IN DRAWDOWN AREA= | 893878 | MMCF |
| AT 11275.0188889 HOURS FROM START OF TEST | | |
| BUILDUP RADIUS= | 860 | FEET |
| BUILDUP AREA= | 52.8 | ACRES |
| GAS IN BUILDUP AREA= | 1588.9 | MMCF |
| O T I S | | |
| Vw OR Aw | 0 | |
| NO. OF POINTS ANALYSED | 27 | |
| C1RADIAL | 1.81484003568E+128 | |

DAVIS OIL COMPANY
LOGAN FEDERAL 1
SUMMIT COUNTY UTAH
TESTED 1983 NOV 16-18
ANALYZED 1983 NOV 29

O T I S

| | TIME (HRS) | X MCFPD-LOG(HRS) | PRES.MEAS. PSIG | PRES.CALC. PSIG | DIF |
|---|---|---|---|---|---|
| 1 | 11254.98 | 2.5973328778E+04 | 3823.91 | 3823.91 | 0.00 |
| 80 | 11258.84 | 2.1220732408E+04 | 4918.44 | 4919.03 | .59 |
| 81 | 11259.01 | 2.1073200729E+04 | 4918.65 | 4919.18 | .53 |
| 82 | 11259.51 | 2.0662669067E+04 | 4919.32 | 4919.59 | .27 |
| 83 | 11260.01 | 2.0299930788E+04 | 4919.91 | 4919.95 | .04 |
| 84 | 11260.51 | 1.9972948001E+04 | 4920.37 | 4920.28 | -.09 |
| 85 | 11261.01 | 1.9675487189E+04 | 4920.77 | 4920.58 | -.19 |
| 86 | 11261.51 | 1.9402809740E+04 | 4921.08 | 4920.85 | -.23 |
| 87 | 11262.01 | 1.9151229409E+04 | 4921.40 | 4921.10 | -.30 |
| 88 | 11262.51 | 1.8917822263E+04 | 4921.63 | 4921.34 | -.29 |
| 89 | 11263.01 | 1.8700230131E+04 | 4921.87 | 4921.56 | -.31 |
| 90 | 11263.51 | 1.8496523569E+04 | 4922.08 | 4921.76 | -.32 |
| 91 | 11264.01 | 1.8305103938E+04 | 4922.34 | 4921.95 | -.39 |
| 92 | 11264.51 | 1.8124631936E+04 | 4922.51 | 4922.13 | -.38 |
| 93 | 11265.01 | 1.7953974433E+04 | 4922.61 | 4922.30 | -.31 |
| 94 | 11265.51 | 1.7792164272E+04 | 4922.68 | 4922.47 | -.21 |
| 95 | 11266.01 | 1.7638369402E+04 | 4922.73 | 4922.62 | -.11 |
| 96 | 11266.51 | 1.7491868873E+04 | 4922.79 | 4922.77 | -.02 |
| 97 | 11267.01 | 1.7352033930E+04 | 4922.83 | 4922.91 | .08 |
| 98 | 11268.01 | 1.7090219427E+04 | 4922.96 | 4923.17 | .21 |
| 99 | 11269.01 | 1.6849236493E+04 | 4923.11 | 4923.41 | .30 |
| 100 | 11270.01 | 1.6626162229E+04 | 4923.30 | 4923.63 | .33 |
| 101 | 11271.01 | 1.6418642094E+04 | 4923.48 | 4923.84 | .36 |
| 102 | 11272.02 | 1.6222928267E+04 | 4923.74 | 4924.04 | .30 |
| 103 | 11273.02 | 1.6041185665E+04 | 4924.08 | 4924.22 | .14 |
| 104 | 11274.02 | 1.5870136176E+04 | 4924.37 | 4924.39 | .02 |
| 105 | 11275.02 | 1.5708655548E+04 | 4924.56 | 4924.55 | -.01 |

O T I S

DAVIS OIL COMPANY
LOGAN FEDERAL 1
SUMMIT COUNTY UTAH
ANALYSIS FILE -LOGAN1_AN

# OTIS

PRELIMINARY FIELD ANALYSIS

TESTED 1983 NOV 16-18
ANALYZED 1983 NOV 29

GENERAL FILE - LOGAN1_G

CERTAIN POINTS IN THE INTERVAL 1 THRU 105

CALCULATED( ——— ) VS MEASURED(0) PRESSURES AND DIFFERENCES(.)

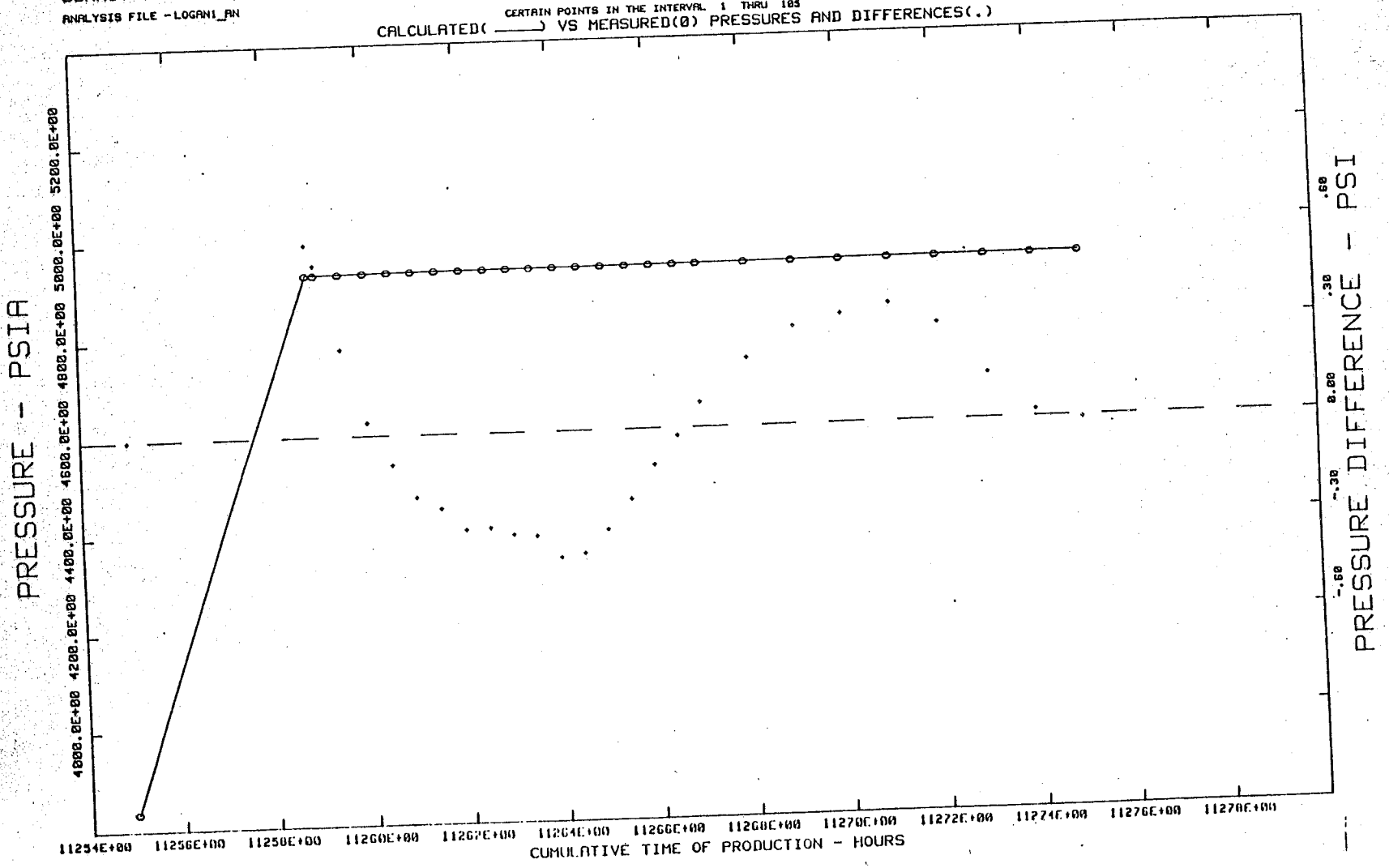

DAVIS OIL COMPANY
LOGAN FEDERAL 1
SUMMIT COUNTY UTAH
ANALYSIS FILE -LOGAN1_AN

OTIS
PRELIMINARY FIELD ANALYSIS

TESTED 1983 NOV 16-18
ANALYZED 1983 NOV 29

GENERAL FILE -

VARIABLE RATE TIME FUNCTION vs REAL GAS POTENTIAL

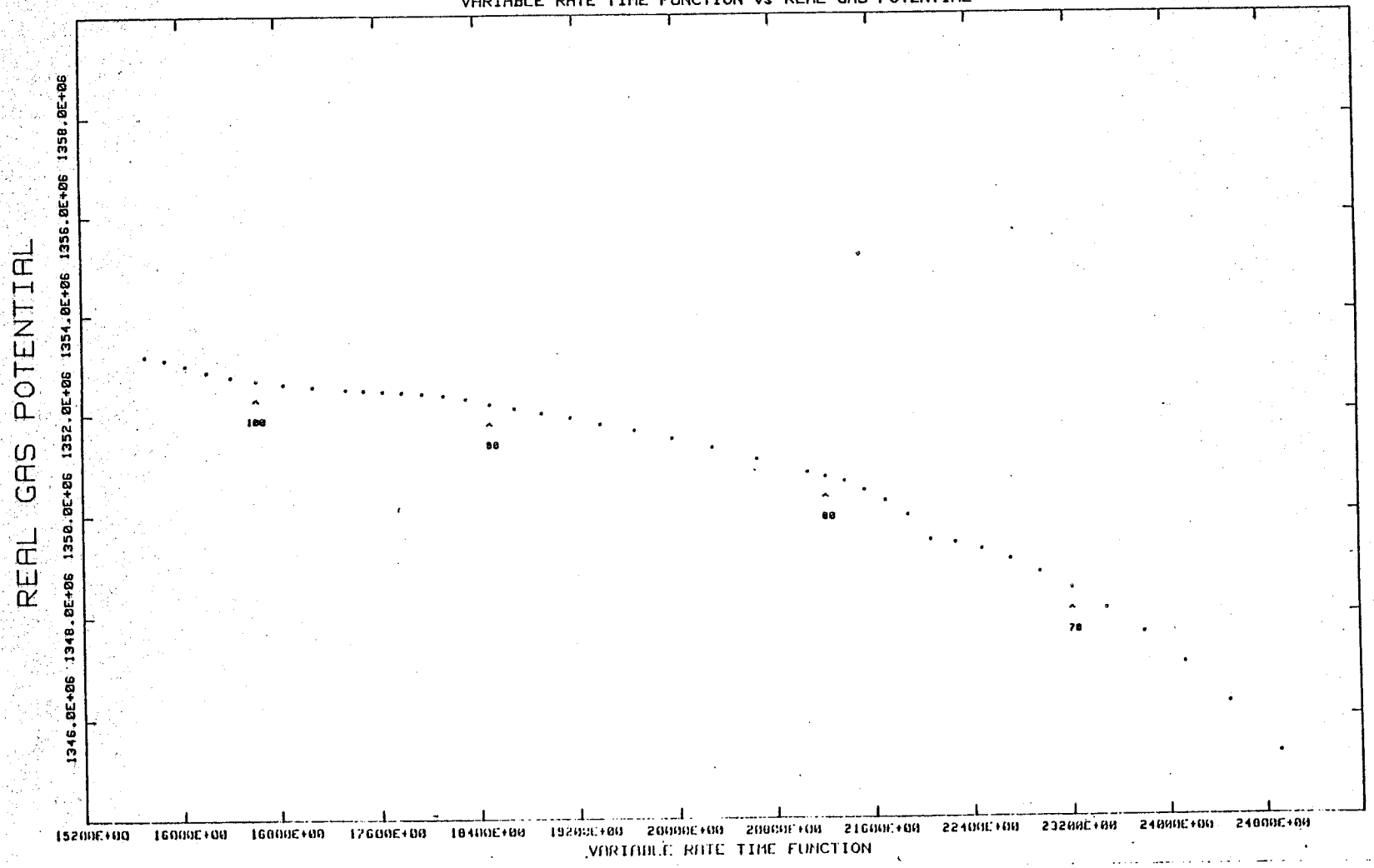

DAVIS OIL COMPANY
LOGAN FEDERAL 1
SUMMIT COUNTY UTAH
ANALYSIS FILE - LOGANI_AN

# OTIS

PRELIMINARY FIELD ANALYSIS

TESTED 1983 NOV 16-18
ANALYZED 1983 NOV 29

GENERAL FILE -

VARIABLE RATE TIME FUNCTION vs REAL GAS POTENTIAL

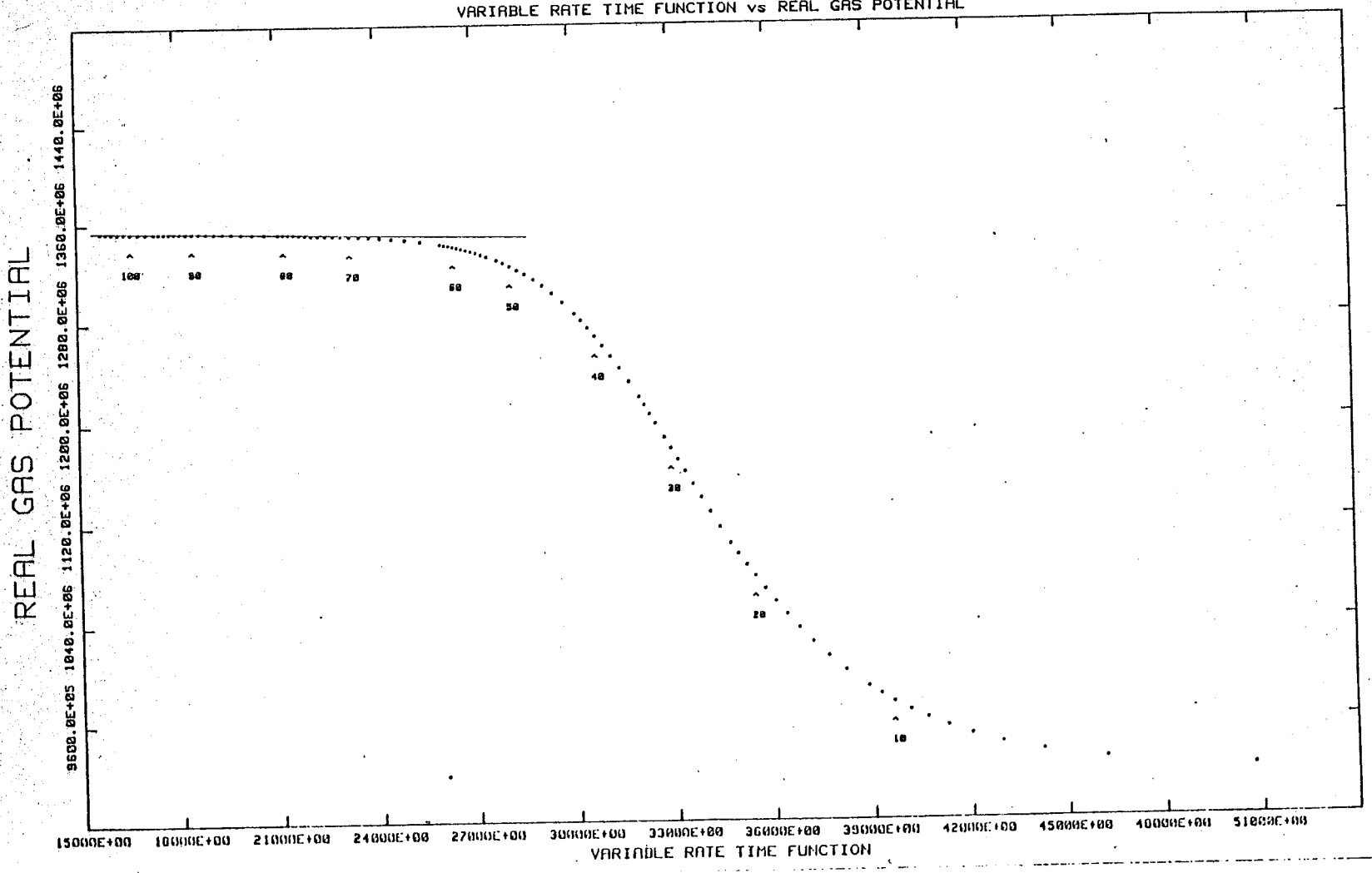

DAVIS OIL COMPANY
LOGAN FEDERAL 1
SUMMIT COUNTY UTAH
ANALYSIS FILE -LOGANI_AN

# OTIS

PRELIMINARY FIELD ANALYSIS

TESTED 1983 NOV 16-18
ANALYZED 1983 NOV 29

GENERAL FILE -

LOG(DELTA TIME-hrs) vs LOG(DELTA M(P))

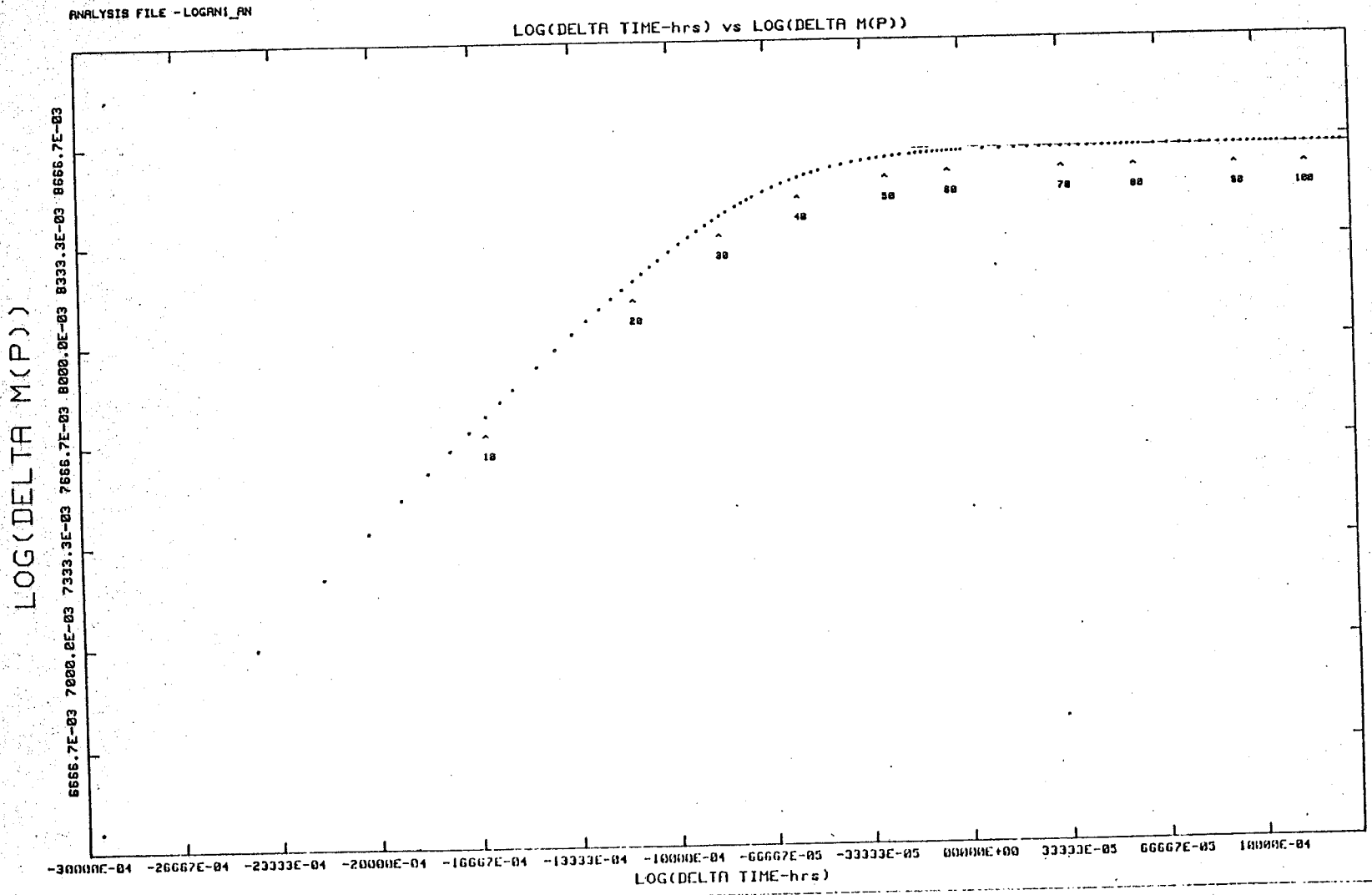

CALCULATED FLUID PROPERTIES
USED IN PRELIMINARY ANALYSIS

GAS SP.GR. .74300 GAS TYPE COND.
RES.TEMP.(DEG.F.) 222.00
PSEUDO CRIT.TEMP 393.68 DEG.R PSEUDO CRIT.PRES 664.64 PSIA
GAS PROPERTIES FILE:MSUS - LOGAN1_F :HP9895,700,3

| PRESSURE PSIA | P/Z | Z FACTOR | VISCOSITY CP. | VOL.FACT. RESB/SMCF | CMPRSBLTY V/MMV/PSI | REAL GAS POTENTIAL |
|---|---|---|---|---|---|---|
| 683.544 | 725.510 | .94216 | .0130 | 4.742314 | 1543.36838 | 1.795400E+07 |
| 1050.633 | 1146.357 | .91650 | .0139 | 3.001332 | 1021.03298 | 6.898742E+07 |
| 1417.722 | 1582.535 | .89585 | .0148 | 2.174106 | 759.36744 | 1.387189E+08 |
| 1784.810 | 2025.454 | .88119 | .0158 | 1.698680 | 595.41384 | 2.252657E+08 |
| 2151.899 | 2464.367 | .87321 | .0168 | 1.396139 | 478.65919 | 3.265560E+08 |
| 2518.987 | 2888.289 | .87214 | .0178 | 1.191224 | 389.55369 | 4.403447E+08 |
| 2886.076 | 3288.264 | .87769 | .0188 | 1.046327 | 319.53844 | 5.643144E+08 |
| 3253.165 | 3658.802 | .88913 | .0199 | .940362 | 264.14466 | 6.962216E+08 |
| 3620.253 | 3997.941 | .90553 | .0209 | .860593 | 220.36015 | 8.340310E+08 |
| 3987.342 | 4306.377 | .92592 | .0220 | .798954 | 185.76972 | 9.759962E+08 |
| 4354.430 | 4586.347 | .94943 | .0231 | .750183 | 158.36514 | 1.120684E+09 |
| 4721.519 | 4840.748 | .97537 | .0242 | .710758 | 136.51783 | 1.266957E+09 |
| 5088.608 | 5072.583 | 1.00316 | .0253 | .678274 | 118.94957 | 1.413936E+09 |
| 5455.696 | 5284.670 | 1.03236 | .0264 | .651053 | 104.67958 | 1.560957E+09 |
| 5822.785 | 5479.526 | 1.06264 | .0275 | .627901 | 92.96600 | 1.707529E+09 |
| 6189.873 | 5659.337 | 1.09375 | .0286 | .607951 | 83.24914 | 1.853300E+09 |
| 6556.962 | 5825.977 | 1.12547 | .0297 | .590562 | 75.10547 | 1.998024E+09 |
| 6924.051 | 5981.044 | 1.15767 | .0307 | .575250 | 68.21477 | 2.141542E+09 |
| 7291.139 | 6125.896 | 1.19022 | .0318 | .561648 | 62.33123 | 2.283760E+09 |
| 7658.228 | 6261.689 | 1.22303 | .0328 | .549468 | 57.26540 | 2.424633E+09 |
| 8025.316 | 6389.411 | 1.25603 | .0338 | .538484 | 52.86983 | 2.564159E+09 |
| 8392.405 | 6509.909 | 1.28917 | .0347 | .528517 | 49.02811 | 2.702364E+09 |
| 8759.494 | 6623.910 | 1.32241 | .0357 | .519421 | 45.64865 | 2.839298E+0 |
| 9126.582 | 6732.046 | 1.35569 | .0366 | .511078 | 42.65762 | 2.975029E+0 |
| 9493.671 | 6834.862 | 1.38901 | .0374 | .503390 | 39.99551 | 3.109640E+0 |
| 9860.759 | 6932.839 | 1.42233 | .0382 | .496276 | 37.61388 | 3.243222E+0 |
| 10227.848 | 7026.393 | 1.45563 | .0390 | .489668 | 35.47304 | 3.375876E+0 |
| 10594.937 | 7115.893 | 1.48891 | .0397 | .483509 | 33.53980 | 3.507707E+0 |
| 10962.025 | 7201.667 | 1.52215 | .0404 | .477750 | 31.78716 | 3.638827E+0 |
| 11329.114 | 7284.003 | 1.55534 | .0411 | .472350 | 30.19206 | 3.769348E+0 |
| 11696.203 | 7363.159 | 1.58848 | .0416 | .467272 | 28.73516 | 3.899387E+0 |
| 12063.291 | 7439.366 | 1.62155 | .0422 | .462485 | 27.40008 | 4.029060E+0 |
| 12430.380 | 7512.832 | 1.65455 | .0426 | .457963 | 26.17287 | 4.158486E+0 |
| 12797.468 | 7583.743 | 1.68749 | .0431 | .453681 | 25.04136 | 4.287785E+0 |
| 13164.557 | 7652.267 | 1.72035 | .0434 | .449618 | 23.99544 | 4.417074E+0 |
| 13531.646 | 7718.558 | 1.75313 | .0438 | .445757 | 23.02608 | 4.546476E+0 |
| 13898.734 | 7782.754 | 1.78584 | .0440 | .442080 | 22.12553 | 4.676108E+0 |
| 14265.823 | 7844.982 | 1.81846 | .0442 | .438573 | 21.28700 | 4.806092E+0 |

DAVIS OIL COMPA
LOGAN FEDERAL 1
SUMMIT COUNTY UTAH
TESTED 1983 NOV 16-18
ANALYZED 1983 NOV 29

GENERAL FILE: LOGAN1_G
ANALYSIS FILE: LOGAN1_AN

O T I S

JOB INFORMATION:

| | | | |
|---|---|---|---|
| TEST BEGAN- 1983 NOV 16 | | | |
| TEST ENDED- 1983 NOV 18 | | | |
| WELL I.D.- LOGAN FEDERAL 1 | | | |
| JOB I.D.- | DS58A048 | ANALYST- | STEVENSON |
| GAUGE NO.- | HEWLETT-PACK | GAUGE DEPTH,FT- | 12700 |

WELL CONFIGURATION:

| | | | |
|---|---|---|---|
| TUBING LENGTH,FEET | 12710.0 | CASING LENGTH,FEET | 13000.0 |
| TUBING O.D.,INCHES | 2.875 | PLUGBACK DEPTH FEET | 13307.0 |
| PACKER DEPTH FEET | 12710.0 | WELLBORE DIAMETER,INCHES | 8.500 |
| TOP OF PERFS,FEET | 12804.0 | BOTTOM OF PERFS,FEET | 12926.0 |

RESERVOIR DATA:

| | | | |
|---|---|---|---|
| INITIAL PRESSURE,PSIG | 5004.500 | PRESSURE DATUM,FEET | 12726.0 |
| GAS MEAS. PRESS. BASE,PSIA | 14.730 | ATMOSPHERIC PRESSURE,PSIA | 12.400 |
| RESERVOIR TEMP., DEG.F. | 222.0 | AVG. RES. DEPTH, FEET | 12900.0 |
| AVG. POROSITY, PERCENT | 11.00 | AVG. WATER SAT., PERCENT | 49.00 |
| AVG. NET. THICKNESS, FEET | 48.00 | FORM. COMP., V/MMV/PSI | 5.000 |
| TOTAL COMP., V/MMV/PSI | 67.700 | FORMATION FLUID- | GAS |

O T I S

DAVIS OIL COMPA
LOGAN FEDERAL 1
SUMMIT COUNTY UTAH
TESTED 1983 NOV 16-18
ANALYZED 1983 NOV 29

GENERAL FILE: LOGAN1_G
ANALYSIS FILE: LOGAN1_AN

O T I S

TIME-PRESSURE DATA

| TIME HOURS | PRESSURE PSIA | M(P) | RATE-TIME FUNCTION | LOG10 SHUTIN TIME | LOG10 DELTA M |
|---|---|---|---|---|---|
| 11254.9775 | 3836.3100 | 917182700.0 | 25973.3288 | 0.0000 | 0.00 |
| 11254.9786 | 3842.7700 | 919687700.0 | 50750.5625 | -2.9542 | 6.39 |
| 11254.9814 | 3861.6700 | 927022200.0 | 46187.6036 | -2.4102 | 6.99 |
| 11254.9842 | 3879.3000 | 933871400.0 | 44224.4823 | -2.1761 | 7.22 |
| 11254.9869 | 3896.9100 | 940720000.0 | 42955.9335 | -2.0248 | 7.37 |
| 11254.9897 | 3914.5500 | 947587300.0 | 42016.9422 | -1.9128 | 7.48 |
| 11254.9925 | 3932.1200 | 954434100.0 | 41271.1255 | -1.8239 | 7.57 |
| 11254.9953 | 3949.5500 | 961233000.0 | 40652.4126 | -1.7501 | 7.64 |
| 11254.9981 | 3966.8400 | 967983600.0 | 40123.7295 | -1.6871 | 7.70 |
| 11255.0008 | 3983.9600 | 974673900.0 | 39662.1773 | -1.6320 | 7.75 |
| 11255.0036 | 4000.8100 | 981264200.0 | 39252.6162 | -1.5832 | 7.80 |
| 11255.0064 | 4017.1800 | 987672200.0 | 38884.5126 | -1.5393 | 7.84 |
| 11255.0122 | 4050.6800 | 1000801500.0 | 38214.8635 | -1.4594 | 7.92 |
| 11255.0175 | 4079.8900 | 1012266500.0 | 37699.7118 | -1.3979 | 7.97 |
| 11255.0231 | 4109.7400 | 1023998400.0 | 37226.2661 | -1.3415 | 8.02 |
| 11255.0286 | 4138.5700 | 1035343900.0 | 36807.3979 | -1.2915 | 8.07 |
| 11255.0342 | 4166.2900 | 1046265400.0 | 36431.8204 | -1.2467 | 8.11 |
| 11255.0397 | 4192.8600 | 1056744800.0 | 36091.4222 | -1.2061 | 8.14 |
| 11255.0453 | 4218.4900 | 1066863500.0 | 35780.1776 | -1.1689 | 8.17 |
| 11255.0511 | 4244.4500 | 1077122200.0 | 35479.7301 | -1.1331 | 8.20 |
| 11255.0564 | 4267.2200 | 1086128200.0 | 35227.7632 | -1.1030 | 8.22 |
| 11255.0619 | 4290.2800 | 1095255900.0 | 34980.1475 | -1.0734 | 8.25 |
| 11255.0675 | 4312.4200 | 1104026100.0 | 34748.3315 | -1.0458 | 8.27 |
| 11255.0758 | 4344.1700 | 1116613600.0 | 34426.1787 | -1.0073 | 8.29 |
| 11255.0842 | 4374.1600 | 1128514100.0 | 34130.2800 | -.9720 | 8.32 |
| 11255.0925 | 4402.5300 | 1139780900.0 | 33856.6811 | -.9393 | 8.34 |
| 11255.1008 | 4429.2800 | 1150412300.0 | 33602.2593 | -.9089 | 8.36 |
| 11255.1094 | 4455.2100 | 1160724700.0 | 33356.8418 | -.8796 | 8.38 |
| 11255.1175 | 4478.3700 | 1169941100.0 | 33141.3706 | -.8539 | 8.40 |
| 11255.1258 | 4500.8800 | 1178903600.0 | 32931.1649 | -.8288 | 8.41 |
| 11255.1342 | 4522.0600 | 1187340700.0 | 32732.4737 | -.8050 | 8.43 |
| 11255.1461 | 4550.4200 | 1198643700.0 | 32465.4189 | -.7731 | 8.44 |
| 11255.1544 | 4568.7300 | 1205944500.0 | 32290.1035 | -.7522 | 8.46 |
| 11255.1631 | 4586.4000 | 1212992500.0 | 32117.4326 | -.7315 | 8.47 |
| 11255.1711 | 4602.3400 | 1219352500.0 | 31963.0250 | -.7131 | 8.48 |
| 11255.1878 | 4632.1600 | 1231255300.0 | 31663.0390 | -.6772 | 8.49 |
| 11255.2044 | 4658.6700 | 1241841900.0 | 31386.0081 | -.6441 | 8.51 |
| 11255.2211 | 4682.1500 | 1251222100.0 | 31128.6755 | -.6133 | 8.52 |
| 11255.2378 | 4703.2300 | 1259646200.0 | 30888.4321 | -.5846 | 8.53 |
| 11255.2544 | 4721.9400 | 1267125300.0 | 30663.1548 | -.5576 | 8.54 |

DAVIS OIL COMPANY
LOGAN FEDERAL 1
SUMMIT COUNTY UTAH
TESTED 1983 NOV 16-18
ANALYZED 1983 NOV 29

GENERAL FILE: LOGAN1_G
ANALYSIS FILE: LOGAN1_AN

O T I S

TIME-PRESSURE DATA

| TIME HOURS | PRESSURE PSIA | M(P) | RATE-TIME FUNCTION | LOG10 SHUTIN TIME | LOG10 DELTA M |
|---|---|---|---|---|---|
| 11255.2714 | 4738.8500 | 1273886200.0 | 30447.6623 | -.5318 | 8.55 |
| 11255.2878 | 4753.6400 | 1279800600.0 | 30250.7876 | -.5082 | 8.55 |
| 11255.3044 | 4767.0100 | 1285148000.0 | 30061.0066 | -.4855 | 8.56 |
| 11255.3378 | 4789.6200 | 1294192900.0 | 29708.9795 | -.4434 | 8.57 |
| 11255.3711 | 4807.7600 | 1301451200.0 | 29388.2658 | -.4049 | 8.58 |
| 11255.4044 | 4822.9000 | 1307510000.0 | 29093.7676 | -.3696 | 8.59 |
| 11255.4378 | 4835.4100 | 1312517000.0 | 28821.5387 | -.3370 | 8.59 |
| 11255.4711 | 4846.0400 | 1316772000.0 | 28568.4617 | -.3066 | 8.60 |
| 11255.5008 | 4854.1300 | 1320010500.0 | 28356.9060 | -.2812 | 8.60 |
| 11255.5342 | 4861.9200 | 1323129200.0 | 28133.5830 | -.2544 | 8.60 |
| 11255.5675 | 4868.5500 | 1325783600.0 | 27923.3416 | -.2291 | 8.61 |
| 11255.6008 | 4874.3800 | 1328117800.0 | 27724.7427 | -.2053 | 8.61 |
| 11255.6508 | 4881.5400 | 1330984600.0 | 27446.0684 | -.1718 | 8.61 |
| 11255.6844 | 4885.7500 | 1332670400.0 | 27270.2308 | -.1506 | 8.61 |
| 11255.7175 | 4889.3500 | 1334111900.0 | 27105.3403 | -.1308 | 8.62 |
| 11255.7508 | 4892.6100 | 1335417300.0 | 26946.4265 | -.1116 | 8.62 |
| 11255.7842 | 4895.4700 | 1336562600.0 | 26794.2830 | -.0933 | 8.62 |
| 11255.8175 | 4898.0300 | 1337587700.0 | 26648.3611 | -.0757 | 8.62 |
| 11255.8508 | 4900.2000 | 1338456700.0 | 26508.1760 | -.0588 | 8.62 |
| 11255.8842 | 4902.2000 | 1339257700.0 | 26373.2975 | -.0426 | 8.62 |
| 11255.9175 | 4904.0000 | 1339978500.0 | 26243.3421 | -.0269 | 8.62 |
| 11255.9508 | 4905.7000 | 1340659300.0 | 26117.9662 | -.0117 | 8.62 |
| 11255.9842 | 4907.2400 | 1341276000.0 | 25996.8612 | .0029 | 8.62 |
| 11256.1717 | 4913.5700 | 1343811000.0 | 25383.3543 | .0771 | 8.63 |
| 11256.3383 | 4917.1800 | 1345256800.0 | 24915.0520 | .1338 | 8.63 |
| 11256.5050 | 4919.6600 | 1346250000.0 | 24501.7065 | .1840 | 8.63 |
| 11256.6717 | 4921.6100 | 1347031000.0 | 24131.8935 | .2290 | 8.63 |
| 11256.8383 | 4923.1000 | 1347627700.0 | 23797.4147 | .2697 | 8.63 |
| 11257.0050 | 4924.2400 | 1348084300.0 | 23492.1872 | .3070 | 8.63 |
| 11257.1717 | 4925.2400 | 1348484800.0 | 23211.5735 | .3413 | 8.63 |
| 11257.3383 | 4926.0400 | 1348805200.0 | 22951.9568 | .3731 | 8.63 |
| 11257.5050 | 4926.6900 | 1349065500.0 | 22710.4622 | .4027 | 8.63 |
| 11257.6717 | 4927.2000 | 1349269800.0 | 22484.7667 | .4304 | 8.63 |
| 11257.8383 | 4927.5300 | 1349402000.0 | 22272.9664 | .4565 | 8.63 |
| 11258.0050 | 4927.6800 | 1349462000.0 | 22073.4816 | .4811 | 8.63 |
| 11258.1717 | 4928.9200 | 1349958700.0 | 21884.9870 | .5044 | 8.63 |
| 11258.3383 | 4929.6300 | 1350243100.0 | 21706.3598 | .5264 | 8.63 |
| 11258.5050 | 4930.1600 | 1350455300.0 | 21536.6409 | .5475 | 8.63 |
| 11258.6717 | 4930.6200 | 1350639600.0 | 21375.0039 | .5675 | 8.63 |
| 11258.8383 | 4930.8400 | 1350727700.0 | 21220.7324 | .5867 | 8.63 |

DAVIS OIL COMPA
LOGAN FEDERAL 1
SUMMIT COUNTY UTAH
TESTED 1983 NOV 16-18
ANALYZED 1983 NOV 29

GENERAL FILE: LOGAN1_G
ANALYSIS FILE: LOGAN1_AN

O T I S

TIME-PRESSURE DATA

| TIME HOURS | PRESSURE PSIA | M(P) | RATE-TIME FUNCTION | LOG10 SHUTIN TIME | LOG10 DELTA M( |
|---|---|---|---|---|---|
| 11259.0050 | 4931.0500 | 1350811800.0 | 21073.2007 | .6050 | 8.637 |
| 11259.5092 | 4931.7200 | 1351080100.0 | 20662.6691 | .6563 | 8.637 |
| 11260.0092 | 4932.3100 | 1351316500.0 | 20299.9308 | .7017 | 8.637 |
| 11260.5092 | 4932.7700 | 1351500700.0 | 19972.9480 | .7429 | 8.637 |
| 11261.0092 | 4933.1700 | 1351660900.0 | 19675.4872 | .7804 | 8.638 |
| 11261.5092 | 4933.4800 | 1351785100.0 | 19402.8097 | .8150 | 8.638 |
| 11262.0092 | 4933.8000 | 1351913200.0 | 19151.2294 | .8471 | 8.638 |
| 11262.5092 | 4934.0300 | 1352005400.0 | 18917.8223 | .8769 | 8.638 |
| 11263.0092 | 4934.2700 | 1352101500.0 | 18700.2301 | .9048 | 8.63 |
| 11263.5092 | 4934.4800 | 1352185600.0 | 18496.5236 | .9310 | 8.63 |
| 11264.0092 | 4934.7400 | 1352289700.0 | 18305.1039 | .9558 | 8.63 |
| 11264.5092 | 4934.9100 | 1352357800.0 | 18124.6319 | .9792 | 8.63 |
| 11265.0092 | 4935.0100 | 1352397900.0 | 17953.9744 | 1.0014 | 8.63 |
| 11265.5092 | 4935.0800 | 1352425900.0 | 17792.1643 | 1.0225 | 8.63 |
| 11266.0092 | 4935.1300 | 1352445900.0 | 17638.3694 | 1.0426 | 8.63 |
| 11266.5092 | 4935.1900 | 1352470000.0 | 17491.8689 | 1.0619 | 8.63 |
| 11267.0092 | 4935.2300 | 1352486000.0 | 17352.0339 | 1.0803 | 8.63 |
| 11268.0092 | 4935.3600 | 1352538100.0 | 17090.2194 | 1.1150 | 8.63 |
| 11269.0092 | 4935.5100 | 1352598100.0 | 16849.2365 | 1.1471 | 8.63 |
| 11270.0092 | 4935.7000 | 1352674200.0 | 16626.1622 | 1.1770 | 8.63 |
| 11271.0092 | 4935.8800 | 1352746300.0 | 16418.6421 | 1.2050 | 8.63 |
| 11272.0189 | 4936.1400 | 1352850500.0 | 16222.9283 | 1.2315 | 8.63 |
| 11273.0189 | 4936.4800 | 1352986700.0 | 16041.1857 | 1.2563 | 8.63 |
| 11274.0189 | 4936.7700 | 1353102800.0 | 15870.1362 | 1.2797 | 8.63 |
| 11275.0189 | 4936.9600 | 1353178900.0 | 15708.6555 | 1.3019 | 8.63 |

DAVIS OIL COMPA
LOGAN FEDERAL 1
SUMMIT COUNTY UTAH
TESTED 1983 NOV 16-18
ANALYZED 1983 NOV 29

GENERAL FILE: LOGAN1_G
ANALYSIS FILE: LOGAN1_AN

O T I S

TIME-RATE DATA

| TIME HOURS | OIL-RATE STB/DAY | GAS RATE MSCF/DAY | WATER RATE BBL/DAY | SAND FACE RATE STD MCF/DAY |
|---|---|---|---|---|
| 97.0000 | 300.5000 | 4050.0000 | 7.2500 | 4313.4787 |
| 145.0000 | 0.0000 | 0.0000 | 0.0000 | 0.0000 |
| 199.0000 | 178.6700 | 2166.7000 | 4.6700 | 2323.8777 |
| 213.0000 | 0.0000 | 0.0000 | 0.0000 | 0.0000 |
| 244.5000 | 240.0000 | 3150.0000 | 0.0000 | 3351.9869 |
| 279.0000 | 0.0000 | 0.0000 | 0.0000 | 0.0000 |
| 336.0000 | 280.0000 | 3866.7000 | 0.0000 | 4102.3513 |
| 369.5000 | 0.0000 | 0.0000 | 0.0000 | 0.0000 |
| 421.0000 | 484.0000 | 5000.0000 | 9.0000 | 5420.4397 |
| 448.0000 | 561.0000 | 6000.0000 | 6.0000 | 6480.8758 |
| 449.0000 | 0.0000 | 0.0000 | 0.0000 | 0.0000 |
| 527.0000 | 710.0000 | 7933.0000 | 5.6700 | 8538.7916 |
| 528.0000 | 0.0000 | 0.0000 | 0.0000 | 0.0000 |
| 571.0000 | 586.5000 | 5500.0000 | 5.0000 | 6000.8759 |
| 5863.0000 | 0.0000 | 0.0000 | 0.0000 | 0.0000 |
| 6002.5000 | 250.0000 | 2242.0000 | 0.0000 | 2452.4030 |
| 6007.0000 | 0.0000 | 0.0000 | 0.0000 | 0.0000 |
| 6029.0000 | 279.0000 | 2332.0000 | 0.0000 | 2566.8097 |
| 6031.0000 | 0.0000 | 0.0000 | 0.0000 | 0.0000 |
| 6221.5000 | 381.9000 | 3306.5000 | 0.0000 | 3627.9116 |
| 6223.0000 | 0.0000 | 0.0000 | 0.0000 | 0.0000 |
| 6361.0000 | 294.8000 | 2538.2000 | 0.0000 | 2786.3072 |
| 6367.0000 | 0.0000 | 0.0000 | 0.0000 | 0.0000 |
| 6371.0000 | 336.0000 | 3850.0000 | 0.0000 | 4132.7816 |
| 6391.0000 | 0.0000 | 0.0000 | 0.0000 | 0.0000 |
| 6458.5000 | 280.4000 | 2724.0000 | 4.1200 | 2965.7430 |
| 6476.5000 | 0.0000 | 0.0000 | 0.0000 | 0.0000 |
| 6727.0000 | 326.2000 | 2747.3000 | 0.0000 | 3021.8338 |
| 6739.0000 | 0.0000 | 0.0000 | 0.0000 | 0.0000 |
| 7135.0000 | 306.9300 | 2730.9300 | 0.0000 | 2989.2460 |
| 7254.0000 | 0.0000 | 0.0000 | 0.0000 | 0.0000 |
| 7279.0000 | 243.0000 | 1854.0000 | 0.0000 | 2058.5117 |
| 7327.0000 | 0.0000 | 0.0000 | 0.0000 | 0.0000 |
| 7759.0000 | 320.0000 | 2958.5000 | 2.5000 | 3231.2748 |
| 7802.5000 | 0.0000 | 0.0000 | 0.0000 | 0.0000 |
| 7807.0000 | 224.0000 | 2021.0000 | 0.0000 | 2209.5211 |
| 7831.0000 | 0.0000 | 0.0000 | 0.0000 | 0.0000 |
| 8119.0000 | 221.2500 | 1868.7500 | 2.4000 | 2058.2684 |
| 8137.0000 | 0.0000 | 0.0000 | 0.0000 | 0.0000 |
| 8263.0000 | 250.7500 | 1850.8500 | 3.0500 | 2066.0883 |

DAVIS OIL COMPANY
LOGAN FEDERAL 1
SUMMIT COUNTY UTAH
TESTED 1983 NOV 16-18
ANALYZED 1983 NOV 29

GENERAL FILE: LOGAN1_G
ANALYSIS FILE: LOGAN1_AN

O T I S

TIME-RATE DATA

| TIME HOURS | OIL-RATE STB/DAY | GAS RATE MSCF/DAY | WATER RATE BBL/DAY | SAND FACE RATE STD MCF/DAY |
|---|---|---|---|---|
| 8281.0000 | 0.0000 | 0.0000 | 0.0000 | 0.0000 |
| 8287.0000 | 243.0000 | 2182.0000 | 3.0000 | 2390.6462 |
| 8359.0000 | 0.0000 | 0.0000 | 0.0000 | 0.0000 |
| 8449.9728 | 513.5800 | 4961.1700 | 2.9800 | 5397.5070 |
| 8551.0000 | 0.0000 | 0.0000 | 0.0000 | 0.0000 |
| 9527.5500 | 211.7100 | 3785.3400 | 2.1800 | 3966.4938 |
| 9574.2500 | 0.0000 | 0.0000 | 0.0000 | 0.0000 |
| 10222.0833 | 282.9900 | 3470.4400 | 2.3600 | 3711.8123 |
| 10303.0000 | 0.0000 | 0.0000 | 0.0000 | 0.0000 |
| 10855.0000 | 254.2000 | 2336.0000 | 1.6500 | 2552.1671 |
| 11095.0000 | 288.7100 | 2423.0000 | 1.0700 | 2667.4247 |
| 11143.0000 | 0.0000 | 0.0000 | 0.0000 | 0.0000 |
| 11222.0000 | 288.7100 | 2423.0000 | 1.0700 | 2667.4233 |
| 11223.0000 | 332.6200 | 3510.0200 | 0.0000 | 3789.9570 |
| 11224.0000 | 332.6200 | 3549.0000 | 0.0000 | 3828.9370 |
| 11225.0000 | 342.7000 | 3345.2400 | 0.0000 | 3633.6604 |
| 11226.0000 | 383.0100 | 3393.0400 | 10.0200 | 3728.8841 |
| 11227.0000 | 393.0900 | 3445.4100 | 0.0000 | 3776.2392 |
| 11228.0000 | 372.9400 | 3381.4700 | 0.0000 | 3695.3408 |
| 11229.0000 | 342.7000 | 3344.4000 | 10.0200 | 3646.3184 |
| 11230.0000 | 372.9400 | 3304.8400 | 0.0000 | 3618.7108 |
| 11231.0000 | 362.8600 | 3313.4300 | 0.0000 | 3618.8173 |
| 11232.0000 | 342.7000 | 3275.3200 | 10.0200 | 3577.2380 |
| 11233.0000 | 393.0900 | 3274.0000 | 0.0000 | 3604.8292 |
| 11234.0000 | 352.7800 | 3312.3700 | 0.0000 | 3609.2739 |
| 11235.0000 | 362.8600 | 3264.3200 | 10.0200 | 3583.2046 |
| 11236.0000 | 342.7000 | 3301.6300 | 0.0000 | 3590.0504 |
| 11237.0000 | 393.0900 | 3289.8800 | 0.0000 | 3620.7092 |
| 11238.0000 | 332.6200 | 3284.1400 | 10.0200 | 3577.5739 |
| 11239.0000 | 362.8600 | 3289.8400 | 0.0000 | 3595.2273 |
| 11240.0000 | 352.7800 | 3276.4800 | 0.0000 | 3573.3839 |
| 11241.0000 | 362.8600 | 3311.8900 | 0.0000 | 3617.2773 |
| 11242.0000 | 383.0100 | 3345.7700 | 10.0200 | 3681.6123 |
| 11243.0000 | 372.9400 | 3348.4200 | 0.0000 | 3662.2908 |
| 11244.0000 | 342.7000 | 3353.0200 | 0.0000 | 3641.4404 |
| 11245.0000 | 352.7800 | 3352.6200 | 0.0000 | 3649.5239 |
| 11246.0000 | 372.9400 | 3352.6200 | 10.0200 | 3679.9869 |
| 11247.0000 | 352.7800 | 3352.8600 | 0.0000 | 3649.7639 |
| 11248.0000 | 302.3800 | 3304.2800 | 0.0000 | 3558.7666 |
| 11249.0000 | 352.7800 | 3265.6200 | 0.0000 | 3562.5239 |

DAVIS OIL COM
LOGAN FEDERAL 1
SUMMIT COUNTY UTAH
TESTED 1983 NOV 16-18
ANALYZED 1983 NOV 29

GENERAL FILE: LOGAN1_G
ANALYSIS FILE: LOGAN1_AN

O T I S

TIME-RATE DATA

| TIME HOURS | OIL-RATE STB/DAY | GAS RATE MSCF/DAY | WATER RATE BBL/DAY | SAND FACE RATE STD MCF/DAY |
|---|---|---|---|---|
| 11250.0000 | 362.8600 | 3264.3000 | 10.0200 | 3583.1830 |
| 11251.0000 | 383.0100 | 3269.5700 | 0.0000 | 3591.9158 |
| 11252.0000 | 302.3800 | 3269.5700 | 0.0000 | 3524.0566 |
| 11253.0000 | 342.7000 | 3309.2600 | 0.0000 | 3597.6804 |
| 11254.0000 | 362.8600 | 3353.5500 | 10.0200 | 3672.4326 |
| 11254.9775 | 342.7000 | 3354.0000 | 0.0000 | 3642.4204 |
| 11254.9786 | 0.0000 | 0.0000 | 0.0000 | 0.0000 |
| 11254.9814 | 0.0000 | 0.0000 | 0.0000 | 0.0000 |
| 11254.9842 | 0.0000 | 0.0000 | 0.0000 | 0.0000 |
| 11254.9869 | 0.0000 | 0.0000 | 0.0000 | 0.0000 |
| 11254.9897 | 0.0000 | 0.0000 | 0.0000 | 0.0000 |
| 11254.9925 | 0.0000 | 0.0000 | 0.0000 | 0.0000 |
| 11254.9953 | 0.0000 | 0.0000 | 0.0000 | 0.0000 |
| 11254.9981 | 0.0000 | 0.0000 | 0.0000 | 0.0000 |
| 11255.0008 | 0.0000 | 0.0000 | 0.0000 | 0.0000 |
| 11255.0036 | 0.0000 | 0.0000 | 0.0000 | 0.0000 |
| 11255.0064 | 0.0000 | 0.0000 | 0.0000 | 0.0000 |
| 11255.0122 | 0.0000 | 0.0000 | 0.0000 | 0.0000 |
| 11255.0175 | 0.0000 | 0.0000 | 0.0000 | 0.0000 |
| 11255.0231 | 0.0000 | 0.0000 | 0.0000 | 0.0000 |
| 11255.0286 | 0.0000 | 0.0000 | 0.0000 | 0.0000 |
| 11255.0342 | 0.0000 | 0.0000 | 0.0000 | 0.0000 |
| 11255.0397 | 0.0000 | 0.0000 | 0.0000 | 0.0000 |
| 11255.0453 | 0.0000 | 0.0000 | 0.0000 | 0.0000 |
| 11255.0511 | 0.0000 | 0.0000 | 0.0000 | 0.0000 |
| 11255.0564 | 0.0000 | 0.0000 | 0.0000 | 0.0000 |
| 11255.0619 | 0.0000 | 0.0000 | 0.0000 | 0.0000 |
| 11255.0675 | 0.0000 | 0.0000 | 0.0000 | 0.0000 |
| 11255.0758 | 0.0000 | 0.0000 | 0.0000 | 0.0000 |
| 11255.0842 | 0.0000 | 0.0000 | 0.0000 | 0.0000 |
| 11255.0925 | 0.0000 | 0.0000 | 0.0000 | 0.0000 |
| 11255.1008 | 0.0000 | 0.0000 | 0.0000 | 0.0000 |
| 11255.1094 | 0.0000 | 0.0000 | 0.0000 | 0.0000 |
| 11255.1175 | 0.0000 | 0.0000 | 0.0000 | 0.0000 |
| 11255.1258 | 0.0000 | 0.0000 | 0.0000 | 0.0000 |
| 11255.1342 | 0.0000 | 0.0000 | 0.0000 | 0.0000 |
| 11255.1461 | 0.0000 | 0.0000 | 0.0000 | 0.0000 |
| 11255.1544 | 0.0000 | 0.0000 | 0.0000 | 0.0000 |
| 11255.1631 | 0.0000 | 0.0000 | 0.0000 | 0.0000 |
| 11255.1711 | 0.0000 | 0.0000 | 0.0000 | 0.0000 |

COMPANY: DAVIS OIL COMPANY

WELL: LOGAN-FEDERAL #1

AREA: SUMMIT COUNTY, UTAH

TEST: FLOWBACK

DATE: 1983 NOVEMBER 16-17

Steve Smith

DAVIS OIL COMPANY
410 — 17TH STREET, SUITE 1400
DENVER, COLORADO 80202-4472
TELEPHONE: 303-623-1000

NEW ORLEANS
HOUSTON
TULSA

December 2, 1983

RECEIVED
DEC 6 1983
DIVISION OF
OIL, GAS & MINING

Director
Utah Division of Oil, Gas and Mining
4241 State Office Building
Salt Lake City, UT 84114

Attn: Norm Stout

File: SRS-434-031.131

Re: Cause #203-1
Establishment of 80 Acre
Drilling and Spacing Units
For the North Pineview Field
of Summit County, Utah

Gentlemen:

The Utah Board of Oil, Gas and Mining entered into an order October 29, 1982, establishing 80 acre drilling and spacing units for the below described area:

T3N-R7E, Summit County, Utah

| | |
|---|---|
| Section 25 | W/2 |
| Section 26 | All |
| Section 35 | N/2 |
| Section 36 | NW/4 |

Paragraph 4 of the order states:

"4. The operator of each well shall be required to take a bottom hole pressure test for each well every thirty (30) days and promptly report the results to the Division of Oil, Gas and Mining until further Order of this Board."

Deliveries from the #1 Logan Federal (SE NE 26-T3N-R7E), commenced on April 6, 1983 at a rate of 2567 Mcfd and 233 bcpd. On November 17, 1983, the well was shut-in for a bottom hole pressure buildup survey after cumulating an estimated 521,381 Mcf (2744 Mcfd average for 190 days), and 56,395 bbls (277 bcpd average for 190 days). The results of this survey are attached hereto and presented below:

Initial reservoir pressure @12865' = 5022.85 psia
(midpoint of perforations)

Reservoir pressure from buildup of
11/17/83 = 4952.70 psia @12,700
calculated at 12865' (.144 psi/ft) = 4976.5 psia

Calculated loss in reservoir pressure = 46.4 psia

Reservoir Pressure History

| Date | Pressure @ 12865' | Cumulative Mcf | Production Bbls |
|---|---|---|---|
| 8/29/82 | 5022.85 | Initial | Pressure |
| 5/1/83 | 5000.58 | 64,376 | 7,519 |
| 5/31/83 | 4994.70 | 136,161 | 14,233 |
| 7/23/83 | 4983.38 | 258,852 | 26,808 |
| 9/6/83 | 4976.45 | 360,189 | 40,380 |
| 10/5/83 | 4976.25 | 418,494 | 46,045 |
| 11/17/83 | 4976.50 | 521,381 | 56,395 |

Paragraph 5 of the order states:

"5. Until a pressure maintenance system is approved by this Board and placed in operation for any well, production of gas and condensate from each such well within the spaced area may not exceed 350 barrels of condensate per day and 4 million cubic feet of gas per day, as long as the reservoir pressure is 150 psi or more above the retrograde dew point. If any bottom hole pressure test referred to above shows that the reservoir pressure is less than 150 psi above the retrograde dew point, all production from such well shall forthwith cease and said well shall be shut-in until the pressure in the well separately measured can be maintained at least 150 psi above the dew point, or until further Order of this Board."

| | |
|---|---|
| Dew point pressure from Core Laboratory study of 10/5/82 = 4731 psig = 4743 psia | = 4743 psia |
| Dew point pressure +150 psi | = 4893 psia |
| Reservoir pressure (11/17/83) | = 4976 |

The #1 Logan Federal remains 83 psi above the pressure limit set by the Utah Board.

If you have any questions, please advise.

Yours very truly,

DAVIS OIL COMPANY

Stephan R Smith
Chief Engineer

SRS:ee
Attachments

cc: Bob McDonald
Bill Cagle
Lynn Belcher
Don Rasmussen
Paul Messinger
Ed Lafaye
R.G. Giles, Amoco Production Co.
John Dolan, American Quasar

DAVIS OIL COMPANY
LOGAN FEDERAL 1
SUMMIT COUNTY, UTAH
PREVISE ANALYSIS
TESTED 1983 NOV 16-18

# PREVISE ANALYSIS DISTRIBUTION LIST

COMPANY: DAVIS OIL COMPANY

WELL: LOGAN-FEDERAL #1

AREA: SUMMIT COUNTY, UTAH

TEST: RADIAL FLOW ANALYSIS

DATE: 1983 NOVEMBER 16-18

COPIES OF THIS REPORT HAVE BEEN SENT TO THE FOLLOWING INDIVIDUALS OR COMPANIES

| COPIES | RECIPIENTS |
|---|---|
| 3 | Davis Oil Company<br>410 17th St., Suite 1400<br>Denver, CO 80202<br>Attn: Steve Smith |
| 1 | Davis Oil Company<br>3211 Energy Lane, Suite 201<br>Casper, WY 82601 |
| 1 | Otis Engineering Corporation<br>7600 E. Orchard Road<br>Suite 354<br>Englewood, CO 80111<br>Well Data Report Group |

DAVIS OIL COMPANY
410 — 17TH STREET, SUITE 1400
DENVER, COLORADO 80202-4472
TELEPHONE: 303-623-1000

NEW ORLEANS
HOUSTON
TULSA

January 20, 1984

RECEIVED
DIVISION OF
OIL, GAS & MINING

Director
Utah Division of Oil, Gas and Mining
4241 State Office Building
Salt Lake City, UT 84114

Attn: Norm Stout

File: SRS-10-031.131

Re: Cause #203-1
Establishment of 80 Acre
Drilling and Spacing Units
For the North Pineview Field
of Summit County, Utah

Gentlemen:

The Utah Board of Oil, Gas and Mining entered into an order October 29, 1982, establishing 80 acre drilling and spacing units for the below described area:

T3N-R7E, Summit County, Utah

| | |
|---|---|
| Section 25 | W/2 |
| Section 26 | All |
| Section 35 | N/2 |
| Section 36 | NW/4 |

Paragraph 4 of the order states:

"4. The operator of each well shall be required to take a bottom hole pressure test for each well every thirty (30) days and promptly report the results to the Division of Oil, Gas and Mining until further Order of this Board."

File

Deliveries from the #1 Logan Federal (SE NE 26-T3N-R7E), commenced on April 6, 1983 at a rate of 2567 Mcfd and 233 bcpd. On December 13, 1983, the well was shut-in for a bottom hole pressure buildup survey after cumulating an estimated 582,506 Mcf (2734 Mcfd average for 213 days), and 62,876 bbls (295 bcpd average for 213 days). The results of this survey are attached hereto and presented below:

Initial reservoir pressure @12865' = 5022.85 psia
(midpoint of perforations)

Reservoir pressure from buildup of
12/13/83 = 4940.40 psia @12,726
calculated at 12865' (.144 psi/ft) = 4960.5 psia

Calculated loss in reservoir pressure = 62.3 psia

Reservoir Pressure History

| Date | Pressure @ 12865' | Cumulative Mcf | Production Bbls |
|---|---|---|---|
| 8/29/82 | 5022.85 | Initial | Pressure |
| 5/1/83 | 5000.58 | 65,346 | 7,276 |
| 5/31/83 | 4994.70 | 130,284 | 14,249 |
| 7/23/83 | 4983.38 | 235,786 | 25,996 |
| 9/6/83 | 4976.45 | 346,539 | 39,981 |
| 10/5/83 | 4976.25 | 418,494 | 46,045 |
| 11/17/83 | 4976.50 | 521,381 | 56,395 |
| 12/13/83 | 4960.50 | 582,506 | 62,876 |

Paragraph 5 of the order states:

"5. Until a pressure maintenance system is approved by this Board and placed in operation for any well, production of gas and condensate from each such well within the spaced area may not exceed 350 barrels of condensate per day and 4 million cubic feet of gas per day, as long as the reservoir pressure is 150 psi or more above the retrograde dew point. If any bottom hole pressure test referred to above shows that the reservoir pressure is less than 150 psi above the retrograde dew point, all production from such well shall forthwith cease and said well shall be shut-in until the pressure in the well separately measured can be maintained at least 150 psi above the dew point, or until further Order of this Board."

| | |
|---|---|
| Dew point pressure from Core Laboratory study of 10/5/82 = 4731 psig = 4743 psia | = 4743 psia |
| Dew point pressure +150 psi | = 4893 psia |
| Reservoir pressure (12/13/83) | = 4961 |

The #1 Logan Federal remains 68 psi above the pressure limit set by the Utah Board.

A bottom-hole static pressure for the Logan #2-A (NW SE Sec. 26-T3N-R7E) was taken on December 15, 1983 prior to going on line. The reservoir pressure at -5351' subsea (equivalent to 12865' in the Logan #1) was 4965 psi.

Copies of the #1 and #2 pressure measurements are attached.

If you have any questions, please advise.

Yours very truly,

DAVIS OIL COMPANY

SR Smith

Stephan R Smith
Chief Engineer

SRS:ee
Attachments

cc: Bob McDonald
Jim Schumacher
Lynn Belcher
Don Rasmussen
Paul Messinger
Ed Lafaye
R.G. Giles, Amoco Production Co.
John Dolan, American Quasar

OTIS
7600 E. ORCHARD ROAD, SUITE 354
ENGLEWOOD, CO. 80111
303/694-3942

CMS/81/83

December 22, 1983

RECEIVED
DIVISION OF
OIL, GAS & MINING

Mr. Steve Smith
Davis Oil Company
410 17th St., Suite 1400
Denver, CO 80202

Re: Static Gradient Survey on Logan 2A

Dear Steve:

The pages following present the pressure gradient and BHP on the referenced well.

The static vertical column is indicative of a heavy gas (.159 psi/ft. avg.) with a light fluid level in the wellbore. This would be expected as condensates are formed at pressures below those up the hole. These condensates then fall and build-up in the wellbore.

A BHP of 4964.55 psia at 12860 WLM was established after 1 hour of instrument stabilizing time. Bottom hole temperature at that point was measured to be 224.4°F.

Good agreement of reservoir pressure exists between the Logan Fed. 1 and 2A. The instrument setting depth using wire-line measurements are 134 ft. different neglecting deviation. When the Logan 1 is corrected to 12,860 WLM (Logan 2A), a pressure of 4959 psia is achieved using .132 psi/ft. which is normal to the Logan #1.

Sincerely,

OTIS ENGINEERING CORPORATION

Carl Schwab

Carl M. Schwab
Regional Engineer, Western Region

CMS/tcf

Enclosure

OTIS

TEST RESULTS

OEC-865-1-C

| TEST NUMBER | WELL NAME OR NUMBER | AREA | RATE/BUILD-UP NUMBER DATE (DAY MO YR) | PAGE | OF |
|---|---|---|---|---|---|
| 2A | LOGAN-FED. 2A | EVANSTON | | 1 | 1 |

| CUSTOMER | OIL GRAVITY @ 60°F (°API) | GAS SPECIFIC GRAVITY (AIR = 1) | INTERVAL TESTED (FEET) | STANDARD CONDITIONS PRESS / TEMP |
|---|---|---|---|---|
| DAVIS OIL COMPANY | | | | |

| DAY / TIME (24 HR CLOCK) | FLOW OR SHUT-IN TIME (HOURS) | WELL HEAD PRESSURE (psi ____) | WELL HEAD TEMP (°F) | CHOKE SIZE (64TH INCH) | SEPARATOR PRESSURE (psi ____) | BOTTOM HOLE PRESSURE @ ____ DEPTH (FT) (psi ____) | BOTTOM HOLE TEMP @ ____ DEPTH (FT) (°F) | CORRECTED GAS FLOW RATE $Q_g$ (____ MSCF/D) | CORRECTED OIL FLOW RATE $Q_o$ (STO BPD) | WATER FLOW RATE (BPD) | ☐ (GOR MSCF/STO BBL) ☐ (OGR STO BBL/MSCF) | WOR (BBL/STO BBL) | WGR (BBL/MMSCF) | |
|---|---|---|---|---|---|---|---|---|---|---|---|---|---|---|
| 1 | | 2911.11 | 28 | | | | | | | | | | | 1 |
| 2 | | | | | | 3107.05 | 60 | @ | 1000 ft. | | | | | 2 |
| 3 | | | | | | 3268.62 | 72 | @ | 2000 ft. | | | | | 3 |
| 4 | | | | | | 3418.10 | 81 | @ | 3000 ft. | | | | | 4 |
| 5 | | | | | | 3567.28 | 92 | @ | 4000 ft. | | | | | 5 |
| 6 | | | | | | 3716.21 | 109 | @ | 5000 ft. | | | | | 6 |
| 7 | | | | | | 3867.31 | 127 | @ | 6000 ft. | | | | | 7 |
| 8 | | | | | | 4018.25 | 139 | @ | 7000 ft. | | | | | 8 |
| 9 | | | | | | 4172.34 | 152 | @ | 8000 ft. | | | | | 9 |
| 10 | | | | | | 4330.55 | 164 | @ | 9000 ft. | | | | | 10 |
| 11 | | | | | | 4491.17 | 177 | @ | 10000 ft. | | | | | 11 |
| 12 | | | | | | 4654.76 | 190 | @ | 11000 ft. | | | | | 12 |
| 13 | | | | | | 4828.65 | 208 | @ | 12000 ft. | | | | | 13 |
| 14 | | | | | | 4974.47 | 223 | @ | 12860 ft. | | | | | 14 |
| 15 | | | | | | 4974.47 | 223 | @ | 12860 ft. | | | | | 15 |
| 16 | | | | | | | | | | | | | | 16 |

TOTAL WELL EFFLUENTS PRODUCED

| FLOW TIME FROM | FLOW TIME TO | NUMBER FOR RATE | FLOW TIME/END FOR TEST UP TO | NUMBER OF RATE |
|---|---|---|---|---|
| | | | | |

| GAS ( MSCF)) | OIL (BBLS)) | WATER (BBLS)) | GAS ( MSCF)) | OIL (BBLS)) | WATER (BBLS)) |
|---|---|---|---|---|---|
| | | | | | |

TEST RESULTS

OEC-865-1-C

| TEST NUMBER | WELL NAME OR NUMBER | AREA | RATE/BUILD-UP NUMBER DATE (DAY MO YR) | PAGE | OF |
|---|---|---|---|---|---|
| 2A | LOGAN-FED. 2A | EVANSTON | | 1 | 1 |

| CUSTOMER | OIL GRAVITY @ 60 °F (°API) | GAS SPECIFIC GRAVITY (AIR = 1) | INTERVAL TESTED (FEET) | STANDARD CONDITIONS PRESS | TEMP |
|---|---|---|---|---|---|
| DAVIS OIL COMPANY | | | | | |

| DAY / TIME (24 HR CLOCK) | FLOW OR SHUT-IN TIME (HOURS) | WELL HEAD PRESSURE (psi ____) | WELL HEAD TEMP (°F) | CHOKE SIZE (64TH INCH) | SEPARATOR PRESSURE (psi ____) | BOTTOM HOLE PRESSURE @ DEPTH (FT) (psi ____) | BOTTOM HOLE TEMP @ DEPTH (FT) (°F) | CORRECTED GAS FLOW RATE $Q_g$ (____ MSCF/D) | CORRECTED OIL FLOW RATE $Q_o$ (STO BPD) | WATER FLOW RATE (BPD) | ☐ GOR (MSCF/STO BBL) ☐ OGR (STO BBL/MSCF) | WOR (BBL/STO BBL) | WGR (BBL/MMSCF) | |
|---|---|---|---|---|---|---|---|---|---|---|---|---|---|---|
| 1 12/15 1345 | 0 | | | | | 4972.53 | | | Equalizing | | | | | 1 |
| 2 1346 | .0014 | | | | | 4971.89 | | | | | | | | 2 |
| 3 1351 | .0847 | | | | | 4967.98 | | | | | | | | 3 |
| 4 1356 | .1681 | | | | | 4966.26 | | | | | | | | 4 |
| 5 1401 | .2514 | | | | | 4965.61 | | | | | | | | 5 |
| 6 1406 | .3350 | | | | | 4965.25 | | | | | | | | 6 |
| 7 1411 | .4181 | | | | | 4965.08 | | | | | | | | 7 |
| 8 1426 | .6681 | | | | | 4964.67 | | | | | | | | 8 |
| 9 1431 | .7514 | | | | | 4964.68 | | | | | | | | 9 |
| 10 1436 | .8347 | | | | | 4964.60 | | | | | | | | 10 |
| 11 1441 | .9181 | | | | | 4964.64 | | | | | | | | 11 |
| 12 1446 | 1.0014 | | | | | 4964.55 | | | | | | | | 12 |
| 13 1446 | 1.0014 | | | | | 4964.55 | | | | | | | | 13 |
| 14 1446 | 1.0014 | | | | | 4964.55 | | | | | | | | 14 |
| 15 | | | | | | | | | | | | | | 15 |
| 16 | | | | | | | | | | | | | | 16 |

TOTAL WELL EFFLUENTS PRODUCED

| FLOW TIME FROM | FLOW TIME TO | NUMBER FOR RATE | FLOW TIME/END FOR TEST UP TO | NUMBER OF RATE |
|---|---|---|---|---|
| | | | | |

GAS (____ MSCF): OIL (BBLS): WATER (BBLS):

# TEST REPORT DISTRIBUTION LIST

COMPANY: DAVIS OIL COMPANY

WELL: LOGAN-FEDERAL #1

AREA: SUMMIT COUNTY, UTAH

TEST: FLOWBACK

DATE: 1983 NOVEMBER 16-17

COPIES OF THIS REPORT HAVE BEEN SENT TO THE FOLLOWING INDIVIDUALS OR COMPANIES:

| COPIES | RECIPIENTS |
|---|---|
| 3 | Davis Oil Company<br>410 17th Street, Suite 1400<br>Denver, CO 80202<br>Attn: Tom Bowman |
| 1 | Davis Oil Company<br>3211 Energy Lane, Suite 201<br>Casper, WY 82601<br>Attn: Jack Hale |
| 1 | Otis Engineering Corporation<br>P. O. Box 1379<br>Evanston, WY 82930<br>Attn: John Barreau |
| 1 | Otis Engineering Corporation<br>7600 E. Orchard Road, Suite 354<br>Englewood, CO 80111<br>Well Data Report Group |

TEST RESULTS

OEC-865-1-C

| TEST NUMBER | WELL NAME OR NUMBER | AREA | RATE/BUILD-UP NUMBER DATE (DAY MO YR) | PAGE | OF |
|---|---|---|---|---|---|
| | LOGAN FEDERAL 1 | UTAH | 1983NOV16 | 1 | 3 |

| CUSTOMER | OIL GRAVITY @ 60°F (°API) | GAS SPECIFIC GRAVITY (AIR = 1) | INTERVAL TESTED (FEET) | STANDARD CONDITIONS |
|---|---|---|---|---|
| DAVIS OIL COMPANY | 57.40 | 0.743 | | PRESS 14.73 TEMP 60 |

| DAY / TIME (24 HR CLOCK) | FLOW OR SHUT-IN TIME (HOURS) | WELL HEAD PRESSURE (psi g) | WELL HEAD TEMP (°F) | CHOKE SIZE (64TH INCH) | SEPARATOR PRESSURE (psi g) | BOTTOM HOLE PRESSURE @ DEPTH (FT) (psi g) | BOTTOM HOLE TEMP @ DEPTH (FT) (°F) | CORRECTED GAS FLOW RATE $Q_g$ (MSCF/D) | CORRECTED OIL FLOW RATE $Q_o$ (STO BPD) | WATER FLOW RATE (BPD) | ☒ GOR (MSCF/STO BBL) ☐ OGR (STO BBL/MSCF) | WOR (BBL/STO BBL) | WGR (BBL/MMSCF) | PI (bbl/psi) LGR (bbl/mmscf) | |
|---|---|---|---|---|---|---|---|---|---|---|---|---|---|---|---|
| 16 8h 0m | 0.000 | 2140 | BEGIN TEST. 87 | minima 16 | 495 | | | 3510.02 | 0.00 | 0.00 | | | | | 1 |
| 16 9h 0m | 1.000 | 2150 | 87 | 16 | 495 | | | 3549.00 | 332.62 | 1.067E+001 0.00 | | | | 9.372E+001 | 2 |
| 16 10h 0m | 2.000 | 2270 | 88 | 16 | 490 | | | 3345.24 | 342.70 | 9.761E+000 0.00 | | | | 1.024E+002 | 3 |
| 16 11h 0m | 3.000 | 2275 | 87 | 16 | 480 | | | 3393.04 | 383.01 | 8.859E+000 10.02 | 2.616E-002 | 2.953E+000 | | 1.158E+002 | 4 |
| 16 12h 0m | 4.000 | 2270 | 87 | 16 | 480 | | | 3445.41 | 393.09 | 8.765E+000 0.00 | | | | 1.141E+002 | 5 |
| 16 13h 0m | 5.000 | 2270 | 87 | 16 | 480 | | | 3381.47 | 372.94 | 9.067E+000 0.00 | | | | 1.103E+002 | 6 |
| 16 14h 0m | 6.000 | 2250 | 87 | 16 | 470 | | | 3344.40 | 342.70 | 9.759E+000 10.02 | 2.924E-002 | 2.996E+000 | | 1.055E+002 | 7 |
| 16 15h 0m | 7.000 | 2260 | 88 | 16 | 460 | | | 3304.84 | 372.94 | 8.862E+000 0.00 | | | | 1.128E+002 | 8 |
| 16 16h 0m | 8.000 | 2260 | 87 | 16 | 460 | | | 3313.43 | 362.86 | 9.132E+000 0.00 | | | | 1.095E+002 | 9 |
| 16 17h 0m | 9.000 | 2260 | 88 | 16 | 460 | | | 3275.32 | 342.70 | 9.557E+000 10.02 | 2.924E-002 | 3.059E+000 | | 1.077E+002 | 10 |
| 16 18h 0m | 10.000 | 2270 | 88 | 16 | 460 | | | 3274.00 | 393.09 | 8.329E+000 0.00 | | | | 1.201E+002 | 11 |
| 16 19h 0m | 11.000 | 2260 | 88 | 16 | 470 | | | 3312.37 | 352.78 | 9.389E+000 0.00 | | | | 1.065E+002 | 12 |
| 16 20h 0m | 12.000 | 2270 | 88 | 16 | 470 | | | 3264.32 | 362.86 | 8.996E+000 10.02 | 2.761E-002 | 3.070E+000 | | 1.142E+002 | 13 |
| 16 21h 0m | 13.000 | 2275 | 88 | 16 | 480 | | | 3301.63 | 342.70 | 9.634E+000 0.00 | | | | 1.038E+002 | 14 |
| 16 22h 0m | 14.000 | 2270 | 88 | 16 | 480 | | | 3289.88 | 393.09 | 8.369E+000 0.00 | | | | 1.195E+002 | 15 |
| 16 23h 0m | 15.000 | 2270 | 87 | 16 | 490 | | | 3284.14 | 332.62 | 9.874E+000 10.02 | 3.012E-002 | 3.051E+000 | | 1.043E+002 | 16 |

TOTAL WELL EFFLUENTS PRODUCED

| FLOW TIME FROM | FLOW TIME TO | NUMBER FOR RATE | FLOW TIME/END FOR TEST UP TO | NUMBER OF RATE |
|---|---|---|---|---|
| 8h 0m | 23h 0m | | | |

| GAS ( MSCF): | OIL (BBLS): | WATER (BBLS): | GAS ( MSCF): | OIL (BBLS): | WATER (BBLS): |
|---|---|---|---|---|---|
| 2086.6 | 225.9 | 2.1 | | | |

TEST RESULTS

OEC-865-1-C

| TEST NUMBER | WELL NAME OR NUMBER | AREA | RATE/BUILD-UP NUMBER DATE (DAY MO YR) | PAGE | OF |
|---|---|---|---|---|---|
| | LOGAN FEDERAL 1 | UTAH | 1983NOV17 | 2 | 3 |

| CUSTOMER | OIL GRAVITY @ 60°F (°API) | GAS SPECIFIC GRAVITY (AIR = 1) | INTERVAL TESTED (FEET) | STANDARD CONDITIONS |
|---|---|---|---|---|
| DAVIS OIL COMPANY | 57.40 | 0.743 | | PRESS 14.73 TEMP 60 |

| DAY / TIME (24 HR CLOCK) | FLOW OR SHUT-IN TIME (HOURS) | WELL HEAD PRESSURE (psi g) | WELL HEAD TEMP (°F) | CHOKE SIZE (64TH INCH) | SEPARATOR PRESSURE (psi g) | BOTTOM HOLE PRESSURE @ DEPTH (FT) (psi g) | BOTTOM HOLE TEMP @ DEPTH (FT) (°F) | CORRECTED GAS FLOW RATE $Q_g$ (MSCF/D) | CORRECTED OIL FLOW RATE $Q_o$ (STO BPD) | WATER FLOW RATE (BPD) | ☒ GOR (MSCF/STO BBL) ☐ OGR (STO BBL/MSCF) | WOR (BBL/STO BBL) | WGR (BBL/MMSCF) | PI (bbl/psi) LGR (bbl/mmscf) |
|---|---|---|---|---|---|---|---|---|---|---|---|---|---|---|
| 17 0h 0m | 16.000 | 2270 | 87 | 16 | 490 | | | 3289.84 | 362.86 | 0.00 | 9.067E+000 | | | 1 1.103E+002 |
| 17 1h 0m | 17.000 | 2270 | 87 | 16 | 500 | | | 3276.48 | 352.78 | 0.00 | 9.288E+000 | | | 2 1.077E+002 |
| 17 2h 0m | 18.000 | 2270 | 87 | 16 | 510 | | | 3311.89 | 362.86 | 0.00 | 9.127E+000 | | | 3 1.096E+002 |
| 17 3h 0m | 19.000 | 2270 | 88 | 16 | 520 | | | 3345.77 | 383.01 | 10.02 | 8.735E+000 | 2.616E-002 | 2.995E+000 | 4 1.175E+002 |
| 17 4h 0m | 20.000 | 2265 | 88 | 16 | 520 | | | 3348.42 | 372.94 | 0.00 | 8.979E+000 | | | 5 1.114E+002 |
| 17 5h 0m | 21.000 | 2270 | 88 | 16 | 520 | | | 3353.02 | 342.70 | 0.00 | 9.784E+000 | | | 6 1.022E+002 |
| 17 6h 0m | 22.000 | 2270 | 88 | 16 | 520 | | | 3352.62 | 352.78 | 0.00 | 9.504E+000 | | | 7 1.052E+002 |
| 17 7h 0m | 23.000 | 2280 | 88 | 16 | 520 | | | 3352.62 | 372.94 | 10.02 | 8.990E+000 | 2.687E-002 | 2.989E+000 | 8 1.142E+002 |
| 17 8h 0m | 24.000 | 2280 | 88 | 16 | 510 | | | 3352.86 | 352.78 | 0.00 | 9.504E+000 | | | 9 1.052E+002 |
| 17 9h 0m | 25.000 | 2275 | 87 | 16 | 510 | | | 3304.28 | 302.38 | 0.00 | 1.093E+001 | | | 10 9.151E+001 |
| 17 10h 0m | 26.000 | 2280 | 87 | 16 | 500 | | | 3265.62 | 352.78 | 0.00 | 9.257E+000 | | | 11 1.080E+002 |
| 17 11h 0m | 27.000 | 2280 | 87 | 16 | 500 | | | 3264.30 | 362.86 | 10.02 | 8.996E+000 | 2.761E-002 | 3.070E+000 | 12 1.142E+002 |
| 17 12h 0m | 28.000 | 2270 | 87 | 16 | 500 | | | 3269.57 | 383.01 | 0.00 | 8.536E+000 | | | 13 1.171E+002 |
| 17 13h 0m | 29.000 | 2280 | 88 | 16 | 500 | | | 3269.57 | 302.38 | 0.00 | 1.081E+001 | | | 14 9.248E+001 |
| 17 14h 0m | 30.000 | 2280 | 87 | 16 | 510 | | | 3309.26 | 342.70 | 0.00 | 9.657E+000 | | | 15 1.036E+002 |
| 17 15h 0m | 31.000 | 2315 | TBG 87 | PRESSURE TAKEN WITH ELECTRONIC DWT. 16 | 520 | | | 3353.55 | 362.86 | 10.02 | 9.242E+000 | 2.761E-002 | 2.988E+000 | 16 1.112E+002 |

TOTAL WELL EFFLUENTS PRODUCED

| FLOW TIME FROM | FLOW TIME TO | NUMBER FOR RATE | FLOW TIME/END FOR TEST UP TO | NUMBER OF RATE |
|---|---|---|---|---|
| 23h 0m | 15h 0m | | | |

| GAS (MSCF): | OIL (BBLS): | WATER (BBLS): | GAS (MSCF): | OIL (BBLS): | WATER (BBLS): |
|---|---|---|---|---|---|
| 2209.2 | 236.0 | 1.7 | | | |

TEST RESULTS

OEC-865-1-C

| TEST NUMBER | WELL NAME OR NUMBER | AREA | RATE/BUILD-UP NUMBER DATE (DAY MO YR) | PAGE | OF |
|---|---|---|---|---|---|
| | LOGAN FEDERAL 1 | UTAH | 1983NOV17 | 3 | 3 |

| CUSTOMER | OIL GRAVITY @ 60°F (°API) | GAS SPECIFIC GRAVITY (AIR = 1) | INTERVAL TESTED (FEET) | STANDARD CONDITIONS |
|---|---|---|---|---|
| DAVIS OIL COMPANY | 57.40 | 0.743 | | PRESS 14.73 TEMP 60 |

| DAY / TIME (24 HR CLOCK) | FLOW OR SHUT-IN TIME (HOURS) | WELL HEAD PRESSURE (psi g) | WELL HEAD TEMP (°F) | CHOKE SIZE (64TH INCH) | SEPARATOR PRESSURE (psi g) | BOTTOM HOLE PRESSURE @ DEPTH (FT) (psi g) | BOTTOM HOLE TEMP @ DEPTH (FT) (°F) | CORRECTED GAS FLOW RATE $Q_g$ (MSCF/D) | CORRECTED OIL FLOW RATE $Q_o$ (STO BPD) | WATER FLOW RATE (BPD) | ☒ GOR (MSCF/STO BBL) ☐ OGR (STO BBL/MSCF) | WOR (BBL/STO BBL) | WGR (BBL/MMSCF) | PI (bbl/psi) LGR (bbl/mmscf) |
|---|---|---|---|---|---|---|---|---|---|---|---|---|---|---|
| 17 16h 0m | 32.000 | 2305 | END 87 | minima FLOW. 16 | 520 | | | 3353.55 | 342.70 | 0.00 | 9.786E+000 | | | 1.022E+002 |

TOTAL WELL EFFLUENTS PRODUCED

| FLOW TIME FROM | FLOW TIME TO | NUMBER FOR RATE | FLOW TIME/END FOR TEST UP TO | NUMBER OF RATE TEST | |
|---|---|---|---|---|---|
| 15h 0m | 16h 0m | | END | | |

4435.5 (BBLS) 476.2 WATER (BBLS) 3.8

# METHOD USED FOR CALCULATING OIL FLOW RATES

OEC—864-A

## MEASUREMENT BY METER

$$V_o = V_m \; C_f \, k \, (1 - BSW/100)$$

WHERE

$V_o$ = VOLUME OF OIL AT ATMOSPHERIC PRESSURE AND TEMPERATURE (GENERALLY 60°F)

$V_m$ = VOLUME OF OIL REGISTERED BY METER(S) SINCE LAST READING AT SEPARATOR PRESSURE AND TEMPERATURE

$C_f$ = MEASURED CORRECTION FACTOR. IT IS OBTAINED BY CALIBRATING THE METER WITH A TANK DURING THE TEST AND INCLUDES BOTH THE METER FACTOR, M, AND THE WEATHERING FACTOR, $W_f$. $C_f = M \, W_f$

M = METER FACTOR. IT IS TO CORRECT FOR ANY METER NON LINEARITIES.

$W_f$ = WEATHERING FACTOR = VOLUME OF OIL AT ATMOSPHERIC PRESSURE AND 60°F ÷ VOLUME OF OIL AT SEPARATOR CONDITIONS. NOTE: $W_f = (1-Sh)$, WHERE Sh = OIL SHRINKAGE FROM SEPARATOR TO STOCK TANK CONDITIONS = (VOLUME OF OIL AT SEPARATOR CONDITIONS – VOLUME OF OIL AT ATMOSPHERIC PRESSURE AND 60°F) ÷ VOLUME OF OIL AT SEPARATOR CONDITIONS.

k = TEMPERATURE CORRECTION FACTOR FROM ASTM TABLES (k = 1 FOR AN OIL TEMPERATURE OF 60°F).

BSW = BASIC SEDIMENT AND WATER MEASURED USING API FIELD CENTRIFUGE METHOD = PERCENT OF BASIC SEDIMENT AND WATER VOLUME TO TOTAL VOLUME OF OIL AND BSW.

$Q_o$ = CORRECTED OIL FLOW RATE = $V_o$ ÷ TIME TO PRODUCE THE VOLUME, $V_o$.

## MEASUREMENT IN TANK

$$V_o = V_t \; k \, (1 - BSW/100)$$

$V_o$, k, BSW, AND $Q_o$ · AS ABOVE

$V_t$ = VOLUME OF OIL MEASURED IN TANK AT TANK TEMPERATURE SINCE LAST READING

## OIL FLOW RATE CALCULATIONS-TANK MEASUREMENTS

OEC—871-1-B

| TEST NUMBER | RATE NUMBER | AREA | DATE (DAY MO YR) | PAGE OF |
|---|---|---|---|---|
| | | UTAH | 1983NOV16 | 1 3 |

| CUSTOMER | WELL NAME OR NUMBER | STO GRAVITY (API) @ 60 °F | STANDARD CONDITIONS | |
|---|---|---|---|---|
| DAVIS OIL COMPANY | LOGAN FEDERAL 1 | 57.40 | 14.73 PRESS. 60 | TEMP. |

| TANK # 1 CAPACITY (BBLS) | TANK # 1 INSIDE DIMENSIONS (INCHES) | BBLS PER INCH FOR TANK # 1 | TANK # 2 CAPACITY (BBLS) | TANK # 2 INSIDE DIMENSIONS (INCHES) | BBLS PER INCH FOR TANK # 2 |
|---|---|---|---|---|---|
| 400 | STOCK TANK | 1.670 | 400 | STOCK TANK | 1.670 |

| | DAY / TIME (24 HR. CLOCK) | FLOW TIME (HOURS) | TANK USED (1 OR 2) | FIELD OIL TANK READINGS (INCHES) | INCREASE IN TANK READINGS SINCE LAST READING (INCHES) | VOLUME BY TANK SINCE LAST READING $V_t$ (BBLS) | TANK TEMP. (°F) | k FROM ASTM TABLES | BSW (%) | CORRECTED OIL VOLUME $V_o = V_t k (1-BSW/100)$ (STO BBLS) | CORRECTED OIL FLOW RATE $Q_o$ (STO BPD) | CORRECTED GAS FLOW RATE FROM GAS FLOW RATE CALC FORM $Q_g$ (MSCF/D) | X GOR (MSCF / STO BBL) OGR (STO BBL / MMSCF) |
|---|---|---|---|---|---|---|---|---|---|---|---|---|---|
| 1 | 16 9h 0m | 1.000 | 1 | 132.00 | 8.25 | 13.78 | 50 | 1.0059 | 0.00 | 13.86 | 332.62 | 3549.00 | 10.67 |
| 2 | 16 10h 0m | 2.000 | 1 | 132.00 | 8.50 | 14.20 | 50 | 1.0059 | 0.00 | 14.28 | 342.70 | 3345.24 | 9.76 |
| 3 | 16 11h 0m | 3.000 | 1 | 141.50 | 9.50 | 15.87 | 50 | 1.0059 | 0.00 | 15.96 | 383.01 | 3393.04 | 8.86 |
| 4 | 16 12h 0m | 4.000 | 1 | 141.50 | 9.75 | 16.28 | 50 | 1.0059 | 0.00 | 16.38 | 393.09 | 3445.41 | 8.76 |
| 5 | 16 13h 0m | 5.000 | 1 | 150.75 | 9.25 | 15.45 | 50 | 1.0059 | 0.00 | 15.54 | 372.94 | 3381.47 | 9.07 |
| 6 | 16 14h 0m | 6.000 | 1 | 150.75 | 8.50 | 14.20 | 50 | 1.0059 | 0.00 | 14.28 | 342.70 | 3344.40 | 9.76 |
| 7 | 16 15h 0m | 7.000 | 1 | 160.00 | 9.25 | 15.45 | 50 | 1.0059 | 0.00 | 15.54 | 372.94 | 3304.84 | 8.86 |
| 8 | 16 16h 0m | 8.000 | 1 | 160.00 | 9.00 | 15.03 | 50 | 1.0059 | 0.00 | 15.12 | 362.86 | 3313.43 | 9.13 |
| 9 | 16 17h 0m | 9.000 | 1 | 168.50 | 8.50 | 14.20 | 50 | 1.0059 | 0.00 | 14.28 | 342.70 | 3275.32 | 9.56 |
| 10 | 16 18h 0m | 10.000 | 1 | 168.50 | 9.75 | 16.28 | 50 | 1.0059 | 0.00 | 16.38 | 393.09 | 3274.00 | 8.33 |
| 11 | 16 19h 0m | 11.000 | 1 | 177.25 | 8.75 | 14.61 | 50 | 1.0059 | 0.00 | 14.70 | 352.78 | 3312.37 | 9.39 |
| 12 | 16 20h 0m | 12.000 | 1 | 177.25 | 9.00 | 15.03 | 50 | 1.0059 | 0.00 | 15.12 | 362.86 | 3264.32 | 9.00 |
| 13 | 16 21h 0m | 13.000 | 1 | 185.75 | 8.50 | 14.20 | 50 | 1.0059 | 0.00 | 14.28 | 342.70 | 3301.63 | 9.63 |
| 14 | 16 22h 0m | 14.000 | 1 | 185.75 | 9.75 | 16.28 | 50 | 1.0059 | 0.00 | 16.38 | 393.09 | 3289.88 | 8.37 |
| 15 | 16 23h 0m | 15.000 | 1 | 194.00 | 8.25 | 13.78 | 50 | 1.0059 | 0.00 | 13.86 | 332.62 | 3284.14 | 9.87 |
| 16 | 17 0h 0m | 16.000 | 1 | 194.00 | 9.00 | 15.03 | 50 | 1.0059 | 0.00 | 15.12 | 362.86 | 3289.84 | 9.07 |
| 17 | 17 1h 0m | 17.000 | 1 | 202.75 | 8.75 | 14.61 | 50 | 1.0059 | 0.00 | 14.70 | 352.78 | 3276.48 | 9.29 |
| 18 | 17 | 18.000 | | | | | | | | | | 3311.89 | 9.13 |

# OIL FLOW RATE CALCULATIONS-TANK MEASUREMENTS

OEC-871-1-B

| TEST NUMBER | RATE NUMBER | AREA | DATE (DAY MO YR) | PAGE OF |
|---|---|---|---|---|
| | | UTAH | 1983NOV17 | 2 2 |

| CUSTOMER | WELL NAME OR NUMBER | STO GRAVITY (API) @ 60 °F | STANDARD CONDITIONS | |
|---|---|---|---|---|
| DAVIS OIL COMPANY | LOGAN FEDERAL 1 | 57.40 | 14.73 PRESS. | 60 TEMP. |

| TANK # 1 CAPACITY (BBLS) | TANK # 1 INSIDE DIMENSIONS (INCHES) | BBLS PER INCH FOR TANK # 1 | TANK # 2 CAPACITY (BBLS) | TANK # 2 INSIDE DIMENSIONS (INCHES) | BBLS PER INCH FOR TANK # 2 |
|---|---|---|---|---|---|
| 400 | STOCK TANK | 1.670 | 400 | STOCK TANK | 1.670 |

| | DAY / TIME (24 HR. CLOCK) | FLOW TIME (HOURS) | TANK USED (1 OR 2) | FIELD OIL TANK READINGS (INCHES) | INCREASE IN TANK READINGS SINCE LAST READING (INCHES) | VOLUME BY TANK SINCE LAST READING $V_t$ (BBLS) | TANK TEMP. (°F) | k FROM ASTM TABLES | BSW (%) | CORRECTED OIL VOLUME $V_o = V_t k (1-BSW/100)$ (STO BBLS) | CORRECTED OIL FLOW RATE $Q_o$ (STO BFD) | CORRECTED GAS FLOW RATE FROM GAS FLOW RATE CALC FORM $Q_g$ (MSCF/D) | X GOR (MSCF/STO BBL) / OGR (STO BBL/MMSCF) |
|---|---|---|---|---|---|---|---|---|---|---|---|---|---|
| 1 | 17 3h 0m | 19.000 | 1 | 212.25 | 9.50 | 15.87 | 50 | 1.0059 | 0.00 | 15.96 | 383.01 | 3345.77 | 8.74 |
| 2 | 17 4h 0m | 20.000 | 1 | 212.25 | 9.25 | 15.45 | 50 | 1.0059 | 0.00 | 15.54 | 372.94 | 3348.42 | 8.98 |
| 3 | 17 5h 0m | 21.000 | 1 | 220.75 | 8.50 | 14.20 | 50 | 1.0059 | 0.00 | 14.28 | 342.70 | 3353.02 | 9.78 |
| 4 | 17 6h 0m | 22.000 | 1 | 220.75 | 8.75 | 14.61 | 50 | 1.0059 | 0.00 | 14.70 | 352.78 | 3352.62 | 9.50 |
| 5 | 17 7h 0m | 23.000 | 1 | 228.00 | 9.25 | 15.45 | 50 | 1.0059 | 0.00 | 15.54 | 372.94 | 3352.62 | 8.99 |
| 6 | 17 8h 0m | 24.000 | 1 | 228.00 | 8.75 | 14.61 | 50 | 1.0059 | 0.00 | 14.70 | 352.78 | 3352.86 | 9.50 |
| 7 | 17 9h 0m | 25.000 | 1 | 228.00 | 7.50 | 12.53 | 50 | 1.0059 | 0.00 | 12.60 | 302.38 | 3304.28 | 10.93 |
| 8 | 17 10h 0m | 26.000 | 1 | 84.50 | 8.75 | 14.61 | 50 | 1.0059 | 0.00 | 14.70 | 352.78 | 3265.62 | 9.26 |
| 9 | 17 11h 0m | 27.000 | 1 | 93.50 | 9.00 | 15.03 | 50 | 1.0059 | 0.00 | 15.12 | 362.86 | 3264.30 | 9.00 |
| 10 | 17 12h 0m | 28.000 | 1 | 93.50 | 9.50 | 15.87 | 50 | 1.0059 | 0.00 | 15.96 | 383.01 | 3269.57 | 8.54 |
| 11 | 17 13h 0m | 29.000 | 1 | 101.00 | 7.50 | 12.53 | 50 | 1.0059 | 0.00 | 12.60 | 302.38 | 3269.57 | 10.81 |
| 12 | 17 14h 0m | 30.000 | 1 | 101.00 | 8.50 | 14.20 | 50 | 1.0059 | 0.00 | 14.28 | 342.70 | 3309.26 | 9.66 |
| 13 | 17 15h 0m | 31.000 | 1 | 110.00 | 9.00 | 15.03 | 50 | 1.0059 | 0.00 | 15.12 | 362.86 | 3353.55 | 9.24 |
| 14 | 17 16h 0m | 32.000 | 1 | 110.00 | 8.50 | 14.20 | 50 | 1.0059 | 0.00 | 14.28 | 342.70 | 3353.55 | 9.79 |
| 15 | | | | | | | | | | | | | |
| 16 | | | | | | | | | | | | | |
| 17 | | | | | | | | | | | | | |
| 18 | | | | | | | | | | | | | |

OTIS

OEC—863-B

# METHOD OF CALCULATING GAS FLOW RATES

BASED ON A.G.A. REPORT NO. 3

$$Q_g = C \sqrt{h_w \quad P_f}$$

WHERE

C = Fpv X Fb X Fg X Ftf X Ftb X Fpb X Fr X $Y_2$ X Fm X UNIT CONVERSION FACTOR

Qg = CORRECTED GAS FLOW RATE
C = ORIFICE FLOW CONSTANT
hw = DIFFERENTIAL PRESSURE ACROSS ORIFICE IN INCHES WATER @ 60°F
Pf = ABSOLUTE STATIC PRESSURE IN psi

AND

Fpv = SUPERCOMPRESSIBILITY FACTOR (CORRECTED FOR $N_2$, $H_2S$, AND $CO_2$ EFFECTS ON FINAL REPORT, (IF DESIRED)
Fb = BASIC ORIFICE FACTOR
Fg = SPECIFIC GRAVITY FACTOR
Ftf = FLOWING TEMPERATURE FACTOR
Ftb = TEMPERATURE BASE FACTOR
Fpb = PRESSURE BASE FACTOR
Fr = REYNOLDS NUMBER FACTOR = 1
$Y_2$ = EXPANSION FACTOR FOR DOWNSTREAM PRESSURE TAP
Fm = MANOMETER FACTOR = 1
UNIT CONVERSION FACTOR = FACTOR CHANGING FLOW RATE UNITS

WE CAN UNITE Fu = Ftb X Fpb X UNIT CONVERSION FACTOR
(Fu FACTORS ARE GIVEN IN TABLE BELOW FOR DIFFERENT STANDARD CONDITIONS AND FLOW RATE UNITS)
$C_1$ = Fu X Fg (THEORETICALLY CONSTANT DURING TEST)

$C_2$ = Fpv X Fb X Ftf X $Y_2$
THEN C = $C_1$ X $C_2$

TABLE OF Fu FACTORS

| STANDARD CONDITIONS | RATE OF FLOW UNITS | Cu Ft/HOURS | Cu Ft/DAY | $M^3$/HOUR | $M^3$/DAY |
|---|---|---|---|---|---|
| 14.65 psi | 60°F | 1.0055 | 24.1311 | 0.0285 | 0.6834 |
| 14.73 psi | 60°F | 1 | 24 | 0.0283 | 0.6797 |
| 760 mm Hg | 0°C | 0.9483 | 22.7604 | 0.0269 | 0.6446 |
| 760 mm Hg | 15°C | 1.0004 | 24.0094 | 0.0283 | 0.6799 |
| 750 mm Hg | 15°C | 1.0137 | 24.3295 | 0.0287 | 0.6890 |

**OTIS** GAS FLOW RATE CALCULATIONS

OEC-862-1-B HIGH STAGE

| TEST NUMBER | RATE NUMBER | AREA | WELL NAME OR NUMBER | DATE (DAY, MO, YR) | PAGE | OF |
|---|---|---|---|---|---|---|
| | | UTAH | LOGAN FEDERAL 1 | 1983NOV16 | 1 | 2 |

| CUSTOMER | STANDARD CONDITIONS | ATM. PRESS | $P_c$= | $T_c$= | MEAS. / EST. | GAS SPECIFIC GRAVITY-G |
|---|---|---|---|---|---|---|
| DAVIS OIL COMPANY | X 14.73 psi 60 °F / OTHER | 11.20 | 663.9 | 402.5 | EST. X | 0.743 |

| METER TYPE | METER RUN SIZE (INCHES) | FLOW RECORDER TYPE | $h_w$ RANGE (INCHES WATER) | STATIC PRESS RANGE (psi) | FU TABLE PREV. PAGE | $F_g = \sqrt{1/G}$ | $C_1 = F_u \times F_g$ |
|---|---|---|---|---|---|---|---|
| DANIELS SR. | 4.026 | BARTON 202A | 0-100 | 0-1000 | 24.000 | 1.160 | 27.8431 |

| DAY | FLOW TIME | STATIC PRESSURE $P_f$ | DIFFERENTIAL PRESSURE $h_w$ | DOWN STREAM GAS TEMP. | $\sqrt{h_w P_f}$ | ORIFICE SIZE d | $C_2 = F_b \times F_{tf} \times F_{pv} \times Y_2$ | | | | | C | CORRECTED GAS FLOW RATE |
|---|---|---|---|---|---|---|---|---|---|---|---|---|---|
| TIME (24 HR CLOCK) | (HOURS) | (psia) | (INCHES WATER) | (°F) | | (INCHES) | $F_b$ | $F_{tf}$ | $F_{pv}$ | $Y_2$ | $C_2$ | ($C=C_1 \times C_2$) | $Q_g = C\sqrt{h_w P_f}$ (MSCF/D) |
| 1 16 8h 0m | 0.000 | 506.2 | 40.00 | 72 | 142.30 | 2.000 | 842.12 | 0.9887 | 1.0636 | 1.0005 | 885.935 | 24667 | 1 3510.019 |
| 2 16 9h 0m | 1.000 | 506.2 | 39.00 | 72 | 140.51 | 2.000 | 842.12 | 0.9887 | 1.0636 | 1.0005 | 885.924 | 24667 | 2 3465.825 |
| 3 16 10h 0m | 2.000 | 501.2 | 35.00 | 72 | 132.45 | 2.000 | 842.12 | 0.9887 | 1.0629 | 1.0004 | 885.298 | 24649 | 3 3264.718 |
| 4 16 11h 0m | 3.000 | 491.2 | 37.00 | 73 | 134.81 | 2.000 | 842.12 | 0.9877 | 1.0610 | 1.0005 | 882.956 | 24584 | 4 3314.255 |
| 5 16 12h 0m | 4.000 | 491.2 | 38.00 | 71 | 136.62 | 2.000 | 842.12 | 0.9896 | 1.0619 | 1.0005 | 885.374 | 24652 | 5 3367.943 |
| 6 16 13h 0m | 5.000 | 491.2 | 37.00 | 75 | 134.81 | 2.000 | 842.12 | 0.9859 | 1.0602 | 1.0005 | 880.576 | 24518 | 6 3305.321 |
| 7 16 14h 0m | 6.000 | 481.2 | 37.00 | 75 | 133.43 | 2.000 | 842.12 | 0.9859 | 1.0588 | 1.0005 | 879.452 | 24487 | 7 3267.326 |
| 8 16 15h 0m | 7.000 | 471.2 | 37.00 | 75 | 132.04 | 2.000 | 842.12 | 0.9859 | 1.0574 | 1.0005 | 878.333 | 24455 | 8 3229.085 |
| 9 16 16h 0m | 8.000 | 471.2 | 37.00 | 73 | 132.04 | 2.000 | 842.12 | 0.9877 | 1.0583 | 1.0005 | 880.670 | 24521 | 9 3237.676 |
| 10 16 17h 0m | 9.000 | 471.2 | 36.00 | 72 | 130.24 | 2.000 | 842.12 | 0.9887 | 1.0587 | 1.0005 | 881.836 | 24553 | 10 3197.854 |
| 11 16 18h 0m | 10.000 | 471.2 | 36.00 | 72 | 130.24 | 2.000 | 842.12 | 0.9887 | 1.0587 | 1.0005 | 881.836 | 24553 | 11 3197.854 |
| 12 16 19h 0m | 11.000 | 481.2 | 36.00 | 72 | 131.62 | 2.000 | 842.12 | 0.9887 | 1.0601 | 1.0005 | 882.988 | 24585 | 12 3235.830 |
| 13 16 20h 0m | 12.000 | 481.2 | 35.00 | 72 | 129.78 | 2.000 | 842.12 | 0.9887 | 1.0601 | 1.0004 | 882.977 | 24585 | 13 3190.531 |
| 14 16 21h 0m | 13.000 | 491.2 | 35.00 | 72 | 131.12 | 2.000 | 842.12 | 0.9887 | 1.0615 | 1.0004 | 884.134 | 24617 | 14 3227.738 |
| 15 16 22h 0m | 14.000 | 491.2 | 35.00 | 75 | 131.12 | 2.000 | 842.12 | 0.9859 | 1.0602 | 1.0004 | 880.554 | 24517 | 15 3214.667 |
| 16 16 23h 0m | 15.000 | 501.2 | 34.00 | 74 | 130.54 | 2.000 | 842.12 | 0.9868 | 1.0620 | 1.0004 | 882.871 | 24582 | 16 3208.921 |
| 17 17 0h 0m | 16.000 | 501.2 | 34.00 | 73 | 130.54 | 2.000 | 842.12 | 0.9877 | 1.0624 | 1.0004 | 884.075 | 24615 | 17 3213.299 |
| 18 17 1[illegible] | 17.000 | 511.2 | 37.00 | 72 | 128.89 | 2.000 | 842.12 | 0.9877 | 1.0638 | 1.0004 | 885.222 | 24647 | 18 3201.265 |

OTIS

GAS FLOW RATE CALCULATIONS

OEC-862-1-B

HIGH STAGE

| TEST NUMBER | RATE NUMBER | AREA | WELL NAME OR NUMBER | DATE (DAY, MO, YR) | PAGE | OF |
|---|---|---|---|---|---|---|
| | | UTAH | LOGAN FEDERAL 1 | 1983NOV17 | 2 | 2 |

| CUSTOMER | STANDARD CONDITIONS | ATM. PRESS | $P_c$= | $T_c$= | MEAS. / EST. | GAS SPECIFIC GRAVITY-G |
|---|---|---|---|---|---|---|
| DAVIS OIL COMPANY | X 14.73 psi 60 °F / OTHER | 11.20 | 663.9 | 402.5 | EST. X | 0.743 |

| METER TYPE | METER RUN SIZE (INCHES) | FLOW RECORDER TYPE | $h_w$ RANGE (INCHES WATER) | STATIC PRESS RANGE (psi) | FU TABLE PREV. PAGE | $F_g = \sqrt{1/G}$ | $C_1 = F_u \times F_g$ |
|---|---|---|---|---|---|---|---|
| DANIELS SR. | 4.026 | BARTON 202A | 0-100 | 0-1000 | 24.000 | 1.160 | 27.8431 |

| DAY / TIME (24 HR CLOCK) | FLOW TIME (HOURS) | STATIC PRESSURE $P_f$ (psia) | DIFFERENTIAL PRESSURE $h_w$ (INCHES WATER) | DOWN STREAM GAS TEMP. (°F) | $\sqrt{h_w P_f}$ | ORIFICE SIZE d (INCHES) | $C_2 = F_b \times F_{tf} \times F_{pv} \times Y_2$: $F_b$ | $F_{tf}$ | $F_{pv}$ | $Y_2$ | $C_2$ | C ($C = C_1 \times C_2$) | CORRECTED GAS FLOW RATE $Q_g = C\sqrt{h_w P_f}$ (___MSCF/D) |
|---|---|---|---|---|---|---|---|---|---|---|---|---|---|
| 1 17 2h 0m | 18.000 | 521.2 | 33.00 | 73 | 131.15 | 2.000 | 842.12 | 0.9877 | 1.0652 | 1.0004 | 886.386 | 24680 | 1 3236.672 |
| 2 17 3h 0m | 19.000 | 531.2 | 33.00 | 73 | 132.40 | 2.000 | 842.12 | 0.9877 | 1.0666 | 1.0004 | 887.554 | 24712 | 2 3271.883 |
| 3 17 4h 0m | 20.000 | 531.2 | 33.00 | 73 | 132.40 | 2.000 | 842.12 | 0.9877 | 1.0666 | 1.0004 | 887.554 | 24712 | 3 3271.883 |
| 4 17 5h 0m | 21.000 | 531.2 | 33.00 | 72 | 132.40 | 2.000 | 842.12 | 0.9887 | 1.0671 | 1.0004 | 888.801 | 24747 | 4 3276.477 |
| 5 17 6h 0m | 22.000 | 531.2 | 33.00 | 72 | 132.40 | 2.000 | 842.12 | 0.9887 | 1.0671 | 1.0004 | 888.801 | 24747 | 5 3276.477 |
| 6 17 7h 0m | 23.000 | 531.2 | 33.00 | 72 | 132.40 | 2.000 | 842.12 | 0.9887 | 1.0671 | 1.0004 | 888.801 | 24747 | 6 3276.477 |
| 7 17 8h 0m | 24.000 | 521.2 | 34.00 | 75 | 133.12 | 2.000 | 842.12 | 0.9859 | 1.0643 | 1.0004 | 883.949 | 24612 | 7 3276.314 |
| 8 17 9h 0m | 25.000 | 521.2 | 33.00 | 75 | 131.15 | 2.000 | 842.12 | 0.9859 | 1.0643 | 1.0004 | 883.938 | 24612 | 8 3227.736 |
| 9 17 10h 0m | 26.000 | 511.2 | 33.00 | 76 | 129.88 | 2.000 | 842.12 | 0.9850 | 1.0624 | 1.0004 | 881.596 | 24546 | 9 3188.150 |
| 10 17 11h 0m | 27.000 | 511.2 | 33.00 | 76 | 129.88 | 2.000 | 842.12 | 0.9850 | 1.0624 | 1.0004 | 881.596 | 24546 | 10 3188.150 |
| 11 17 12h 0m | 28.000 | 511.2 | 33.00 | 75 | 129.88 | 2.000 | 842.12 | 0.9859 | 1.0629 | 1.0004 | 882.798 | 24580 | 11 3192.497 |
| 12 17 13h 0m | 29.000 | 511.2 | 33.00 | 75 | 129.88 | 2.000 | 842.12 | 0.9859 | 1.0629 | 1.0004 | 882.798 | 24580 | 12 3192.497 |
| 13 17 14h 0m | 30.000 | 521.2 | 33.00 | 74 | 131.15 | 2.000 | 842.12 | 0.9868 | 1.0648 | 1.0004 | 885.158 | 24646 | 13 3232.191 |
| 14 17 15h 0m | 31.000 | 531.2 | 33.00 | 72 | 132.40 | 2.000 | 842.12 | 0.9887 | 1.0671 | 1.0004 | 888.801 | 24747 | 14 3276.477 |
| 15 17 16h 0m | 32.000 | 531.2 | 33.00 | 72 | 132.40 | 2.000 | 842.12 | 0.9887 | 1.0671 | 1.0004 | 888.801 | 24747 | 15 3276.477 |
| 16 | | | | | | | | | | | | | 16 |
| 17 | | | | | | | | | | | | | 17 |
| 18 | | | | | | | | | | | | | 18 |

# CRITICAL FLOW PROVER AND POSITIVE CHOKE

## METHOD OF RATE CALCULATION

$$Q = C \times Fu \times Fg \times F_{tf} \times F_{pv} \times P$$

where
Q = rate of flow, cubic feet per hour
C = coefficient for prover orifice or positive choke
P = upstream pressure, psia

Other factors Fu, Fg, $F_{tf}$ and $F_{pv}$ have the same meaning and values as for orifice meter.

$F_u = 24$

## BASIC FACTOR C ( cuft / hr / psia )

Base temperature : 60 °F
Base pressure : 14.73 psia
Flowing temperature : 60 °F
Gas specific gravity : 1

### CRITICAL FLOW PROVER

( Based on data from USBM Monograph 7 )

| Two-inch Prover | | Four-inch Prover | |
|---|---|---|---|
| Orifice diameter inches | Factor C | Orifice diameter inches | Factor C |
| 1/16 | 2.722 | 1/4 | 44.51 |
| 3/32 | 5.993 | 3/8 | 100.0 |
| 1/8 | 11.26 | 1/2 | 179.0 |
| 3/16 | 25.85 | 5/8 | 278.8 |
| 7/32 | 35.67 | 3/4 | 399.6 |
| 1/4 | 46.19 | 7/8 | 543.4 |
| 5/16 | 71.04 | 1 | 707.9 |
| 3/8 | 101.1 | 1 1/8 | 891.7 |
| 7/16 | 144.8 | 1 1/4 | 1101 |
| 1/2 | 181.8 | 1 3/8 | 1326 |
| 5/8 | 275.1 | 1 1/2 | 1580 |
| 3/4 | 401.7 | 1 3/4 | 2158 |
| 7/8 | 552.5 | 2 | 2851 |
| 1 | 726.5 | 2 1/4 | 3655 |
| 1 1/8 | 930.3 | 2 1/2 | 4584 |
| 1 1/4 | 1174 | 2 3/4 | 5675 |
| 1 3/8 | 1443 | 3 | 6974 |
| 1 1/2 | 1790 | | |

### THORNHILL CRAVER POSITIVE CHOKE

(From Texas College of Arts and Industries)

| Choke diameter inches | Factor C | Choke diameter inches | Factor C |
|---|---|---|---|
| 1/8 | 10.27 | 23/64 | 93.03 |
| 9/64 | 13.19 | 3/8 | 101.5 |
| 5/32 | 16.51 | 25/64 | 109.9 |
| 11/64 | 20.22 | 13/32 | 118.8 |
| 3/16 | 24.33 | 27/64 | 127.9 |
| 13/64 | 28.81 | 7/16 | 137.3 |
| 7/32 | 33.68 | 29/64 | 147.1 |
| 15/64 | 38.95 | 15/32 | 157.1 |
| 1/4 | 44.63 | 31/64 | 167.5 |
| 17/64 | 50.43 | 1/2 | 178.2 |
| 9/32 | 56.57 | 9/16 | 224.8 |
| 19/64 | 63.07 | 5/8 | 276.7 |
| 5/16 | 69.91 | 11/16 | 339.1 |
| 21/64 | 77.24 | 3/4 | 408.2 |
| 11/32 | 84.95 | | |

OTIS

# GAS FLOW RATE CALCULATIONS

OEC-862-1-B

LOW STAGE

| TEST NUMBER | RATE NUMBER | AREA | WELL NAME OR NUMBER | DATE (DAY, MO, YR) | PAGE | OF |
|---|---|---|---|---|---|---|
| | | UTAH | LOGAN FEDERAL 1 | 1983NOV16 | 1 | 2 |

| CUSTOMER | STANDARD CONDITIONS | ATM. PRESS | $P_c$= | $T_c$= | | GAS SPECIFIC GRAVITY-G |
|---|---|---|---|---|---|---|
| DAVIS OIL COMPANY | X 14.73 psi 60 °F ☐ OTHER | 11.20 | 663.9 | 402.5 | MEAS. ☐ EST. X | 0.743 |

| METER TYPE | METER RUN SIZE (INCHES) | FLOW RECORDER TYPE | $h_w$ RANGE (INCHES WATER) | STATIC PRESS RANGE (psi) | FU TABLE PREV. PAGE | $F_g = \sqrt{1/G}$ | $C_1 = F_u \times F_g$ |
|---|---|---|---|---|---|---|---|
| DANIELS SR. | 2.000 | BARTON 202A | | | 24.000 | 1.160 | 27.8431 |

| DAY TIME (24 HR CLOCK) | FLOW TIME (HOURS) | STATIC PRESSURE $P_f$ (psia) | DIFFERENTIAL PRESSURE $h_w$ (INCHES WATER) | DOWN STREAM GAS TEMP. (°F) | $\sqrt{h_w P_f}$ | ORIFICE SIZE d (INCHES) | $C_2 = F_b \times F_{tf} \times F_{pv} \times Y_2$: $F_b$ | $F_{tf}$ | $F_{pv}$ | $Y_2$ | $C_2$ | C ($C=C_1 \times C_2$) | CORRECTED GAS FLOW RATE (MSCF/D) |
|---|---|---|---|---|---|---|---|---|---|---|---|---|---|
| 1 16 9h 0m | 1.000 | 63.2 | | 45 | | 0.250 | 46.19 | 1.0147 | 1.0084 | 1.0000 | 47.266 | 1316 | 83.173 |
| 2 16 10h 0m | 2.000 | 61.2 | | 45 | | 0.250 | 46.19 | 1.0147 | 1.0082 | 1.0000 | 47.253 | 1316 | 80.519 |
| 3 16 11h 0m | 3.000 | 60.2 | | 50 | | 0.250 | 46.19 | 1.0098 | 1.0078 | 1.0000 | 47.003 | 1309 | 78.784 |
| 4 16 12h 0m | 4.000 | 59.2 | | 50 | | 0.250 | 46.19 | 1.0098 | 1.0076 | 1.0000 | 46.997 | 1309 | 77.466 |
| 5 16 13h 0m | 5.000 | 58.2 | | 50 | | 0.250 | 46.19 | 1.0098 | 1.0075 | 1.0000 | 46.991 | 1308 | 76.147 |
| 6 16 14h 0m | 6.000 | 59.2 | | 55 | | 0.250 | 46.19 | 1.0048 | 1.0074 | 1.0000 | 46.757 | 1302 | 77.070 |
| 7 16 15h 0m | 7.000 | 58.2 | | 55 | | 0.250 | 46.19 | 1.0048 | 1.0073 | 1.0000 | 46.751 | 1302 | 75.759 |
| 8 16 16h 0m | 8.000 | 58.2 | | 55 | | 0.250 | 46.19 | 1.0048 | 1.0073 | 1.0000 | 46.751 | 1302 | 75.759 |
| 9 16 17h 0m | 9.000 | 59.2 | | 50 | | 0.250 | 46.19 | 1.0098 | 1.0076 | 1.0000 | 46.997 | 1309 | 77.466 |
| 10 16 18h 0m | 10.000 | 58.2 | | 50 | | 0.250 | 46.19 | 1.0098 | 1.0075 | 1.0000 | 46.991 | 1308 | 76.147 |
| 11 16 19h 0m | 11.000 | 58.2 | | 45 | | 0.250 | 46.19 | 1.0147 | 1.0078 | 1.0000 | 47.234 | 1315 | 76.541 |
| 12 16 20h 0m | 12.000 | 57.2 | | 45 | | 0.250 | 46.19 | 1.0147 | 1.0082 | 1.0000 | 47.256 | 1316 | 73.787 |
| 13 16 21h 0m | 13.000 | 56.2 | | 45 | | 0.250 | 46.19 | 1.0147 | 1.0075 | 1.0000 | 47.222 | 1315 | 73.891 |
| 14 16 22h 0m | 14.000 | 57.2 | | 45 | | 0.250 | 46.19 | 1.0147 | 1.0076 | 1.0000 | 47.228 | 1315 | 75.216 |
| 15 16 23h 0m | 15.000 | 57.2 | | 45 | | 0.250 | 46.19 | 1.0147 | 1.0076 | 1.0000 | 47.228 | 1315 | 75.216 |
| 16 17 0h 0m | 16.000 | 58.2 | | 45 | | 0.250 | 46.19 | 1.0147 | 1.0078 | 1.0000 | 47.234 | 1315 | 76.541 |
| 17 17 1h 0m | 17.000 | 57.2 | | 45 | | 0.250 | 46.19 | 1.0147 | 1.0076 | 1.0000 | 47.228 | 1315 | 75.216 |
| 18 17 2h 0m | 18.000 | 57.2 | | 45 | | 0.250 | 46.19 | 1.0147 | 1.0076 | 1.0000 | 47.228 | 1315 | 75.216 |

**OTIS** GAS FLOW RATE CALCULATIONS

OEC-862-1-B LOW STAGE

| TEST NUMBER | RATE NUMBER | AREA | WELL NAME OR NUMBER | DATE (DAY, MO, YR) | PAGE | OF |
|---|---|---|---|---|---|---|
| | | UTAH | LOGAN FEDERAL 1 | 1983NOV17 | 2 | 2 |

| CUSTOMER | STANDARD CONDITIONS | ATM. PRESS | $P_c$= | $T_c$= | MEAS. / EST. | GAS SPECIFIC GRAVITY-G |
|---|---|---|---|---|---|---|
| DAVIS OIL COMPANY | X 14.73 psi 60 °F / OTHER | 11.20 | 663.9 | 402.5 | EST. X | 0.743 |

| METER TYPE | METER RUN SIZE (INCHES) | FLOW RECORDER TYPE | $h_w$ RANGE (INCHES WATER) | STATIC PRESS RANGE (psi) | FU TABLE PREV. PAGE | $F_g = \sqrt{1/G}$ | $C_1 = F_u \times F_g$ |
|---|---|---|---|---|---|---|---|
| DANIELS SR. | 2.000 | BARTON 202A | | | 24.000 | 1.160 | 27.8431 |

| DAY / TIME (24 HR CLOCK) | FLOW TIME (HOURS) | STATIC PRESSURE $P_f$ (psia) | DIFFERENTIAL PRESSURE $h_w$ (INCHES WATER) | DOWN STREAM GAS TEMP. (°F) | $\sqrt{h_w P_f}$ | ORIFICE SIZE d (INCHES) | $C_2 = F_b \times F_{tf} \times F_{pv} \times Y_2$: $F_b$ | $F_{tf}$ | $F_{pv}$ | $Y_2$ | $C_2$ | C ($C = C_1 \times C_2$) | CORRECTED GAS FLOW RATE (MSCF/D) |
|---|---|---|---|---|---|---|---|---|---|---|---|---|---|
| 1 17 3h 0m | 19.000 | 56.2 | | 45 | | 0.250 | 46.19 | 1.0147 | 1.0075 | 1.0000 | 47.222 | 1315 | 73.891 |
| 2 17 4h 0m | 20.000 | 58.2 | | 45 | | 0.250 | 46.19 | 1.0147 | 1.0078 | 1.0000 | 47.234 | 1315 | 76.541 |
| 3 17 5h 0m | 21.000 | 58.2 | | 45 | | 0.250 | 46.19 | 1.0147 | 1.0078 | 1.0000 | 47.234 | 1315 | 76.541 |
| 4 17 6h 0m | 22.000 | 58.2 | | 50 | | 0.250 | 46.19 | 1.0098 | 1.0075 | 1.0000 | 46.991 | 1308 | 76.147 |
| 5 17 7h 0m | 23.000 | 58.2 | | 50 | | 0.250 | 46.19 | 1.0098 | 1.0075 | 1.0000 | 46.991 | 1308 | 76.147 |
| 6 17 8h 0m | 24.000 | 58.2 | | 45 | | 0.250 | 46.19 | 1.0147 | 1.0078 | 1.0000 | 47.234 | 1315 | 76.541 |
| 7 17 9h 0m | 25.000 | 58.2 | | 45 | | 0.250 | 46.19 | 1.0147 | 1.0078 | 1.0000 | 47.234 | 1315 | 76.541 |
| 8 17 10h 0m | 26.000 | 59.2 | | 50 | | 0.250 | 46.19 | 1.0098 | 1.0076 | 1.0000 | 46.997 | 1309 | 77.466 |
| 9 17 11h 0m | 27.000 | 58.2 | | 50 | | 0.250 | 46.19 | 1.0098 | 1.0075 | 1.0000 | 46.991 | 1308 | 76.147 |
| 10 17 12h 0m | 28.000 | 59.2 | | 55 | | 0.250 | 46.19 | 1.0048 | 1.0074 | 1.0000 | 46.757 | 1302 | 77.070 |
| 11 17 13h 0m | 29.000 | 59.2 | | 55 | | 0.250 | 46.19 | 1.0048 | 1.0074 | 1.0000 | 46.757 | 1302 | 77.070 |
| 12 17 14h 0m | 30.000 | 59.2 | | 55 | | 0.250 | 46.19 | 1.0048 | 1.0074 | 1.0000 | 46.757 | 1302 | 77.070 |
| 13 17 15h 0m | 31.000 | 59.2 | | 55 | | 0.250 | 46.19 | 1.0048 | 1.0074 | 1.0000 | 46.757 | 1302 | 77.070 |
| 14 17 16h 0m | 32.000 | 59.2 | | 55 | | 0.250 | 46.19 | 1.0048 | 1.0074 | 1.0000 | 46.757 | 1302 | 77.070 |
| 15 | | | | | | | | | | | | | |
| 16 | | | | | | | | | | | | | |
| 17 | | | | | | | | | | | | | |
| 18 | | | | | | | | | | | | | |

**FIELD READINGS**
Two Stage Unit
OEC - 904-1-A

| TEST NO. | WELL NAME OR NUMBER | INTERVAL TESTED (FEET) | BHP SURVEY DEPTH | FORMATION | DATE (DAY MO YR) | PAGE OF |
|---|---|---|---|---|---|---|
| | LOGAN FEDERAL 1 | | 0 FT | | 1983NOV16 | 1 2 |

| CUSTOMER | FIELD | #1 GAS METER RUN SIZE | DIFF. RANGE (INS $H_2O$) | STATIC PRESSURE MEASURED | #1 OIL METER SIZE | METER RANGE (BBLS) |
|---|---|---|---|---|---|---|
| DAVIS OIL COMPANY | SUMMIT COUNTY | 4.026 (INS) | 0-100 | [ ] UPSTREAM [X] DOWNSTREAM | (INS) | |

| TEST UNIT DESCRIPTION (FLOW & PRESSURE RATINGS) | GAS PRODUCED TO | AREA (COUNTY, STATE, OR OCS #, BLK) | #2 GAS METER RUN SIZE | DIFF. RANGE (INS. $H_2O$) | STATIC PRESSURE MEASURED | #2 OIL METER SIZE | METER RANGE (BBLS) |
|---|---|---|---|---|---|---|---|
| PRODUCTION SEPARATOR | [ ] PIPE LINE [X] FLARE | UTAH | 2.000 (INS) | | [X] UPSTREAM [ ] DOWNSTREAM | (INS) | |

| TIME: DAY / 24 HOUR CLOCK | TIME: FLOW OR SHUT-IN DURATION (HOURS) | WELLHEAD DATA: TUBING PRESSURE (PSIG) | WELLHEAD DATA: TEMP (°F) | WELLHEAD DATA: CASING PRESSURE (PSIG) | DOWNHOLE DATA: BHP (PSI—) | DOWNHOLE DATA: BHT (°F) | FLOW CONTROL: MANIFOLD CHOKE SIZE (64TH INCH) | FLOW CONTROL: HEATER CHOKE SIZE (64TH INCH) | GAS METERING: #1 GAS METER DATA: ORIFICE SIZE (INCH) | #1 GAS METER DATA: STATIC PRESSURE (PSIG) | #1 GAS METER DATA: DIFF PRESS (INS $H_2O$) | #1 GAS METER DATA: GAS TEMP (°F) | GAS GRAVITY (#1 METER) / GAS GRAVITY (#2 METER) | #2 GAS METER DATA: ORIFICE SIZE (INCH) | #2 GAS METER DATA: STATIC PRESSURE (PSIG) | #2 GAS METER DATA: DIFF PRESS (INS $H_2O$) | #2 GAS METER DATA: GAS TEMP (°F) | % $H_2S$ / % $CO_2$ | OIL OR CONDENSATE METERING: #1 TANK OR METER READING / #2 TANK OR METER READING (INS ON BBL) | #1 OIL TEMP / #2 OIL TEMP (°F) | WEATHERING FACTOR / BS&W (%) | OIL GRAVITY @ 60 °F (° API) | WATER METERING: #1 TANK OR METER READING / #2 TANK OR METER READING (INS ON BBL) | SALINITY (%) / pH | |
|---|---|---|---|---|---|---|---|---|---|---|---|---|---|---|---|---|---|---|---|---|---|---|---|---|---|---|---|
| 1 16 8h 0m | 0.000 | BEGIN TEST. 2140 | 87 | 0 | 0.0 | 0 | 0 | 16 | 2.000 | 495 | 40 | 72 | 0.743 1 / 0.000 | 0.000 | 0 | | 0 | 0.00 / 0.00 | 123.75 / 43.75 | 50 / 50 | 1.000 / 0.00 | 57.4 | 154.00 / 0.00 | 0.00 / 0.00 | 1 | | |
| 2 16 9h 0m | 1.000 | 2150 | 87 | 0 | 0.0 | 0 | 0 | 16 | 2.000 | 495 | 39 | 72 | 0.743 2 / 0.743 | 0.250 | 52 | | 45 | 0.00 / 0.00 | 132.00 / 43.75 | 50 / 50 | 1.000 / 0.00 | 57.4 | 154.00 / 0.00 | 0.00 / 0.00 | 2 | | |
| 3 16 10h 0m | 2.000 | 2270 | 88 | 0 | 0.0 | 0 | 0 | 16 | 2.000 | 490 | 35 | 72 | 0.743 3 / 0.743 | 0.250 | 50 | | 45 | 0.00 / 0.00 | 132.00 / 52.25 | 50 / 50 | 1.000 / 0.00 | 57.4 | 154.00 / 0.00 | 0.00 / 0.00 | 3 | | |
| 4 16 11h 0m | 3.000 | 2275 | 87 | 0 | 0.0 | 0 | 0 | 16 | 2.000 | 480 | 37 | 73 | 0.743 4 / 0.743 | 0.250 | 49 | | 50 | 0.00 / 0.00 | 141.50 / 52.25 | 50 / 50 | 1.000 / 0.00 | 57.4 | 154.25 / 0.00 | 0.00 / 0.00 | 4 | | |
| 5 16 12h 0m | 4.000 | 2270 | 87 | 0 | 0.0 | 0 | 0 | 16 | 2.000 | 480 | 38 | 71 | 0.743 5 / 0.743 | 0.250 | 48 | | 50 | 0.00 / 0.00 | 141.50 / 62.00 | 50 / 50 | 1.000 / 0.00 | 57.4 | 154.25 / 0.00 | 0.00 / 0.00 | 5 | | |
| 6 16 13h 0m | 5.000 | 2270 | 87 | 0 | 0.0 | 0 | 0 | 16 | 2.000 | 480 | 37 | 75 | 0.743 6 / 0.743 | 0.250 | 47 | | 50 | 0.00 / 0.00 | 150.75 / 62.00 | 50 / 50 | 1.000 / 0.00 | 57.4 | 154.25 / 0.00 | 0.00 / 0.00 | 6 | | |
| 7 16 14h 0m | 6.000 | 2250 | 87 | 0 | 0.0 | 0 | 0 | 16 | 2.000 | 470 | 37 | 75 | 0.743 7 / 0.743 | 0.250 | 48 | | 55 | 0.00 / 0.00 | 150.75 / 70.50 | 50 / 50 | 1.000 / 0.00 | 57.4 | 154.50 / 0.00 | 0.00 / 0.00 | 7 | | |
| 8 16 15h 0m | 7.000 | 2260 | 88 | 0 | 0.0 | 0 | 0 | 16 | 2.000 | 460 | 37 | 75 | 0.743 8 / 0.743 | 0.250 | 47 | | 55 | 0.00 / 0.00 | 160.00 / 70.50 | 50 / 50 | 1.000 / 0.00 | 57.4 | 154.50 / 0.00 | 0.00 / 0.00 | 8 | | |
| 9 16 16h 0m | 8.000 | 2260 | 87 | 0 | 0.0 | 0 | 0 | 16 | 2.000 | 460 | 37 | 73 | 0.743 9 / 0.743 | 0.250 | 47 | | 55 | 0.00 / 0.00 | 160.00 / 79.50 | 50 / 50 | 1.000 / 0.00 | 57.4 | 154.50 / 0.00 | 0.00 / 0.00 | 9 | | |
| 10 16 17h 0m | 9.000 | 2260 | 88 | 0 | 0.0 | 0 | 0 | 16 | 2.000 | 460 | 36 | 72 | 0.743 10 / 0.743 | 0.250 | 48 | | 50 | 0.00 / 0.00 | 168.50 / 79.50 | 50 / 50 | 1.000 / 0.00 | 57.4 | 154.75 / 0.00 | 0.00 / 0.00 | 10 | | |
| 11 16 18h 0m | 10.000 | 2270 | 88 | 0 | 0.0 | 0 | 0 | 16 | 2.000 | 460 | 36 | 72 | 0.743 11 / 0.743 | 0.250 | 47 | | 50 | 0.00 / 0.00 | 168.50 / 89.25 | 50 / 50 | 1.000 / 0.00 | 57.4 | 154.75 / 0.00 | 0.00 / 0.00 | 11 | | |
| 12 16 19h 0m | 11.000 | 2260 | 88 | 0 | 0.0 | 0 | 0 | 16 | 2.000 | 470 | 36 | 72 | 0.743 12 / 0.743 | 0.250 | 47 | | 45 | 0.00 / 0.00 | 177.25 / 89.25 | 50 / 50 | 1.000 / 0.00 | 57.4 | 154.75 / 0.00 | 0.00 / 0.00 | 12 | | |
| 13 16 20h 0m | 12.000 | 2270 | 88 | 0 | 0.0 | 0 | 0 | 16 | 2.000 | 470 | 35 | 72 | 0.743 13 / 0.773 | 0.250 | 46 | | 45 | 0.00 / 0.00 | 177.25 / 98.25 | 50 / 50 | 1.000 / 0.00 | 57.4 | 155.00 / 0.00 | 0.00 / 0.00 | 13 | | |
| 14 16 21h 0m | 13.000 | 2275 | 88 | 0 | 0.0 | 0 | 0 | 16 | 2.000 | 480 | 35 | 72 | 0.743 14 / 0.743 | 0.250 | 45 | | 45 | 0.00 / 0.00 | 185.75 / 98.25 | 50 / 50 | 1.000 / 0.00 | 57.4 | 155.00 / 0.00 | 0.00 / 0.00 | 14 | | |
| 15 16 22h 0m | 14.000 | 2270 | 88 | 0 | 0.0 | 0 | 0 | 16 | 2.000 | 480 | 35 | 75 | 0.743 15 / 0.743 | 0.250 | 46 | | 45 | 0.00 / 0.00 | 185.75 / 108.00 | 50 / 50 | 1.000 / 0.00 | 57.4 | 155.00 / 0.00 | 0.00 / 0.00 | 15 | | |
| 16 16 23h 0m | 15.000 | 2270 | 87 | 0 | 0.0 | 0 | 0 | 16 | 2.000 | 490 | 34 | 74 | 0.743 16 / 0.743 | 0.250 | 46 | | 45 | 0.00 / 0.00 | 194.00 / 108.00 | 50 / 50 | 1.000 / 0.00 | 57.4 | 155.25 / 0.00 | 0.00 / 0.00 | 16 | | |
| 17 17 | 16.000 | | | | | | | | | | | | 0.743 17 | | | | | 0.00 | 194.00 | 50 | 1.000 | | 155.25 | 0.00 | 17 | | |

**FIELD READINGS**
Two Stage Unit
OEC-904-1-A

| TEST NO. | WELL NAME OR NUMBER | INTERVAL TESTED (FEET) | BHP SURVEY DEPTH | FORMATION | DATE (DAY MO YR) | PAGE | OF |
|---|---|---|---|---|---|---|---|
| | LOGAN FEDERAL 1 | | 0 FT | | 1983NOV17 | 2 | 2 |

| CUSTOMER | FIELD | #1 GAS METER RUN SIZE | DIFF. RANGE (INS $H_2O$) | STATIC PRESSURE MEASURED | #1 OIL METER SIZE | METER RANGE (BBLS) |
|---|---|---|---|---|---|---|
| DAVIS OIL COMPANY | SUMMIT COUNTY | 4.026 (INS) | 0-100 | [ ] UPSTREAM [X] DOWNSTREAM | (INS) | |

| TEST UNIT DESCRIPTION (FLOW & PRESSURE RATINGS) | GAS PRODUCED TO | AREA (COUNTY, STATE, OR OCS #, BLK) | #2 GAS METER RUN SIZE | DIFF. RANGE (INS. $H_2O$) | STATIC PRESSURE MEASURED | #2 OIL METER SIZE | METER RANGE (BBLS) |
|---|---|---|---|---|---|---|---|
| PRODUCTION SEPARATOR | [ ] PIPE LINE [X] FLARE | UTAH | 2.000 (INS) | | [X] UPSTREAM [ ] DOWNSTREAM | (INS) | |

| TIME: DAY | TIME: 24 HOUR CLOCK | FLOW OR SHUT-IN DURATION (HOURS) | WELLHEAD DATA: TUBING PRESSURE (PSIG) | WELLHEAD DATA: TEMP (°F) | WELLHEAD DATA: CASING PRESSURE (PSIG) | DOWNHOLE DATA: BHP (PSI—) | DOWNHOLE DATA: BHT (°F) | FLOW CONTROL: MANIFOLD CHOKE SIZE (64TH INCH) | FLOW CONTROL: HEATER CHOKE SIZE (64TH INCH) | GAS METERING #1 GAS METER DATA: ORIFICE SIZE (INCH) | #1 GAS METER DATA: STATIC PRESSURE (PSIG) | #1 GAS METER DATA: DIFF PRESS (INS $H_2O$) | #1 GAS METER DATA: GAS TEMP (°F) | GAS GRAVITY #1 METER / GAS GRAVITY #2 METER | #2 GAS METER DATA: ORIFICE SIZE (INCH) | #2 GAS METER DATA: STATIC PRESSURE (PSIG) | #2 GAS METER DATA: DIFF PRESS (INS $H_2O$) | #2 GAS METER DATA: GAS TEMP (°F) | % $H_2S$ / %$CO_2$ | OIL OR CONDENSATE METERING: #1 TANK OR METER READING (INS OR BBL) / #2 TANK OR METER READING (INS OR BBL) | #1 OIL TEMP / #2 OIL TEMP (°F) | WEATHERING FACTOR (W&M) (%) | OIL GRAVITY @ 60 °F (° API) | WATER METERING: #1 TANK OR METER READING (INS OR BBL) / #2 TANK OR METER READING (INS OR BBL) | SALINITY (%) / PH |
|---|---|---|---|---|---|---|---|---|---|---|---|---|---|---|---|---|---|---|---|---|---|---|---|---|---|---|
| 1 17 | 17.000 | | | | | | | | | | | | | 0.743 1 | | | | | 0.00 | 202.75 | 50 | 1.000 | | 155.25 | 0.00 1 |
| 1h 0m | | | 2270 | 87 | 0 | 0.0 | 0 | 0 | 16 | 2.000 | 500 | 33 | 73 | 0.743 | 0.250 | 46 | | 45 | 0.00 | 117.00 | 50 | 0.00 | 57.4 | 0.00 | 0.00 |
| 2 17 | 18.000 | | | | | | | | | | | | | 0.743 2 | | | | | 0.00 | 202.75 | 50 | 1.000 | | 155.25 | 0.00 2 |
| 2h 0m | | | 2270 | 87 | 0 | 0.0 | 0 | 0 | 16 | 2.000 | 510 | 33 | 73 | 0.743 | 0.250 | 46 | | 45 | 0.00 | 126.00 | 50 | 0.00 | 57.4 | 0.00 | 0.00 |
| 3 17 | 19.000 | | | | | | | | | | | | | 0.743 3 | | | | | 0.00 | 212.25 | 50 | 1.000 | | 155.50 | 0.00 3 |
| 3h 0m | | | 2270 | 88 | 0 | 0.0 | 0 | 0 | 16 | 2.000 | 520 | 33 | 73 | 0.743 | 0.250 | 45 | | 45 | 0.00 | 126.00 | 50 | 0.00 | 57.4 | 0.00 | 0.00 |
| 4 17 | 20.000 | | | | | | | | | | | | | 0.743 4 | | | | | 0.00 | 212.25 | 50 | 1.000 | | 155.50 | 0.00 4 |
| 4h 0m | | | 2265 | 88 | 0 | 0.0 | 0 | 0 | 16 | 2.000 | 520 | 33 | 73 | 0.743 | 0.250 | 47 | | 45 | 0.00 | 135.25 | 50 | 0.00 | 57.4 | 0.00 | 0.00 |
| 5 17 | 21.000 | | | | | | | | | | | | | 0.743 5 | | | | | 0.00 | 220.75 | 50 | 1.000 | | 155.50 | 0.00 5 |
| 5h 0m | | | 2270 | 88 | 0 | 0.0 | 0 | 0 | 16 | 2.000 | 520 | 33 | 72 | 0.743 | 0.250 | 47 | | 45 | 0.00 | 135.25 | 50 | 0.00 | 57.4 | 0.00 | 0.00 |
| 6 17 | 22.000 | | | | | | | | | | | | | 0.743 6 | | | | | 0.00 | 220.75 | 50 | 1.000 | | 155.50 | 0.00 6 |
| 6h 0m | | | 2270 | 88 | 0 | 0.0 | 0 | 0 | 16 | 2.000 | 520 | 33 | 72 | 0.743 | 0.250 | 47 | | 50 | 0.00 | 144.00 | 50 | 0.00 | 57.4 | 0.00 | 0.00 |
| 7 17 | 23.000 | | | | | | | | | | | | | 0.743 7 | | | | | 0.00 | 228.00 | 50 | 1.000 | | 155.75 | 0.00 7 |
| 7h 0m | | | 2280 | 88 | 0 | 0.0 | 0 | 0 | 16 | 2.000 | 520 | 33 | 72 | 0.743 | 0.250 | 47 | | 50 | 0.00 | 146.00 | 50 | 0.00 | 57.4 | 0.00 | 0.00 |
| 8 17 | 24.000 | | | | | | | | | | | | | 0.743 8 | | | | | 0.00 | 228.00 | 50 | 1.000 | | 155.75 | 0.00 8 |
| 8h 0m | | | 2280 | 88 | 0 | 0.0 | 0 | 0 | 16 | 2.000 | 510 | 34 | 75 | 0.743 | 0.250 | 47 | | 45 | 0.00 | 154.75 | 50 | 0.00 | 57.4 | 0.00 | 0.00 |
| 9 17 | 25.000 | | | | | | | | | | | | | 0.743 9 | | | | | 0.00 | 228.00 | 50 | 1.000 | | 155.75 | 0.00 9 |
| 9h 0m | | | 2275 | 87 | 0 | 0.0 | 0 | 0 | 16 | 2.000 | 510 | 33 | 75 | 0.743 | 0.250 | 47 | | 45 | 0.00 | 162.25 | 50 | 0.00 | 57.4 | 0.00 | 0.00 |
| 10 17 | 26.000 | | | | | | | | | | | | | 0.743 10 | | | | | 0.00 | 84.50 | 50 | 1.000 | | 155.75 | 0.00 10 |
| 10h 0m | | | 2280 | 87 | 0 | 0.0 | 0 | 0 | 16 | 2.000 | 500 | 33 | 76 | 0.743 | 0.250 | 48 | | 50 | 0.00 | 171.00 | 50 | 0.00 | 57.4 | 0.00 | 0.00 |
| 11 17 | 27.000 | | | | | | | | | | | | | 0.743 11 | | | | | 0.00 | 93.50 | 50 | 1.000 | | 156.00 | 0.00 11 |
| 11h 0m | | | 2280 | 87 | 0 | 0.0 | 0 | 0 | 16 | 2.000 | 500 | 33 | 76 | 0.743 | 0.250 | 47 | | 50 | 0.00 | 171.00 | 50 | 0.00 | 57.4 | 0.00 | 0.00 |
| 12 17 | 28.000 | | | | | | | | | | | | | 0.743 12 | | | | | 0.00 | 93.50 | 50 | 1.000 | | 156.00 | 0.00 12 |
| 12h 0m | | | 2270 | 87 | 0 | 0.0 | 0 | 0 | 16 | 2.000 | 500 | 33 | 75 | 0.743 | 0.250 | 48 | | 55 | 0.00 | 180.50 | 50 | 0.00 | 57.4 | 0.00 | 0.00 |
| 13 17 | 29.000 | | | | | | | | | | | | | 0.743 13 | | | | | 0.00 | 101.00 | 50 | 1.000 | | 156.00 | 0.00 13 |
| 13h 0m | | | 2280 | 88 | 0 | 0.0 | 0 | 0 | 16 | 2.000 | 500 | 33 | 75 | 0.743 | 0.250 | 48 | | 55 | 0.00 | 180.50 | 50 | 0.00 | 57.4 | 0.00 | 0.00 |
| 14 17 | 30.000 | | | | | | | | | | | | | 0.743 14 | | | | | 0.00 | 101.00 | 50 | 1.000 | | 156.00 | 0.00 14 |
| 14h 0m | | | 2280 | 87 | 0 | 0.0 | 0 | 0 | 16 | 2.000 | 510 | 33 | 74 | 0.743 | 0.250 | 48 | | 55 | 0.00 | 189.00 | 50 | 0.00 | 57.4 | 0.00 | 0.00 |
| 15 17 | 31.000 | TRG PRESSURE TAKEN WITH ELECTRONIC DWT. | | | | | | | | | | | | 0.743 15 | | | | | 0.00 | 110.00 | 50 | 1.000 | | 156.25 | 0.00 15 |
| 15h 0m | | | 2315 | 87 | 0 | 0.0 | 0 | 0 | 16 | 2.000 | 520 | 33 | 72 | 0.743 | 0.250 | 48 | | 55 | 0.00 | 189.00 | 50 | 0.00 | 57.4 | 0.00 | 0.00 |
| 16 17 | 32.000 | END FLOW. | | | | | | | | | | | | 0.743 16 | | | | | 0.00 | 110.00 | 50 | 1.000 | | 156.25 | 0.00 16 |
| 16h 0m | | | 2305 | 87 | 0 | 0.0 | 0 | 0 | 16 | 2.000 | 520 | 33 | 72 | 0.743 | 0.250 | 48 | | 55 | 0.00 | 197.50 | 50 | 0.00 | 57.4 | 0.00 | 0.00 |
| 17 | | | | | | | | | | | | | | 17 | | | | | | | | | | | 17 |

DAVIS OIL COMPANY
410 — 17TH STREET, SUITE 1400
DENVER, COLORADO 80202-4472
TELEPHONE: 303-623-1000

NEW ORLEANS
HOUSTON
TULSA

RECEIVED
FEB 9 1984
DIV. OF OIL, GAS & MINING

January 30, 1984

Director
Utah Division of Oil, Gas and Mining
4241 State Office Building
Salt Lake City, UT 84114

Attn: Norm Stout

File: SRS-20-031.131

Re: Cause #203-1
Establishment of 80 Acre
Drilling and Spacing Units
For the North Pineview Field
of Summit County, Utah

Dear Mr. Shirazi:

The Utah Board of Oil, Gas and Mining entered into an order October 29, 1982, establishing 80 acre drilling and spacing units for the below described area:

T3N-R7E, Summit County, Utah

| | |
|---|---|
| Section 25 | W/2 |
| Section 26 | All |
| Section 35 | N/2 |
| Section 36 | NW/4 |

Paragraph 4 of the order states:

"4. The operator of each well shall be required to take a bottom hole pressure test for each well every thirty (30) days and promptly report the results to the Division of Oil, Gas and Mining until further Order of this Board."

File

Deliveries from the #1 Logan Federal (SE NE 26-T3N-R7E), commenced on April 6, 1983 at a rate of 2567 Mcfd and 233 bcpd. On January 10, 1984, the well was shut-in for a bottom hole pressure buildup survey after cumulating an estimated 644,827 Mcf (2709 Mcfd average for 238 days), and 69,128 bbls (290 bcpd average for 238 days). The results of this survey are attached hereto and presented below:

Initial reservoir pressure @12865' = 5022.85 psia
(midpoint of perforations)

Reservoir pressure from buildup of
1/10/84 = 4945.50 psia @12,726
calculated at 12865' (.144 psi/ft) = 4965.5 psia

Calculated loss in reservoir pressure = 57.3 psia

Reservoir Pressure History

| Date | Pressure @ 12865' | Cumulative Mcf | Production Bbls |
|---|---|---|---|
| 8/29/82 | 5022.85 | Initial | Pressure |
| 5/1/83 | 5000.58 | 65,346 | 7,276 |
| 5/31/83 | 4994.70 | 130,284 | 14,249 |
| 7/23/83 | 4983.38 | 235,786 | 25,996 |
| 9/6/83 | 4976.45 | 346,539 | 39,981 |
| 10/5/83 | 4976.25 | 418,494 | 46,045 |
| 11/17/83 | 4976.50 | 521,381 | 56,395 |
| 12/13/83 | 4960.50 | 582,506 | 62,876 |
| 1/10/84 | 4965.50 | 644,827 | 69,128 |

Paragraph 5 of the order states:

"5. Until a pressure maintenance system is approved by this Board and placed in operation for any well, production of gas and condensate from each such well within the spaced area may not exceed 350 barrels of condensate per day and 4 million cubic feet of gas per day, as long as the reservoir pressure is 150 psi or more above the retrograde dew point. If any bottom hole pressure test referred to above shows that the reservoir pressure is less than 150 psi above the retrograde dew point, all production from such well shall forthwith cease and said well shall be shut-in until the pressure in the well separately measured can be maintained at least 150 psi above the dew point, or until further Order of this Board."

Dew point pressure from Core Laboratory
study of 10/5/82 = 4731 psig = 4743 psia = 4743 psia

Dew point pressure +150 psi = 4893 psia

Reservoir pressure (12/13/83) = 4966

The #1 Logan Federal remains 73 psi above the pressure limit set by the Utah Board.

A copy of the referenced pressure measurements is attached.

If you have any questions, please advise.

Yours very truly,

DAVIS OIL COMPANY

SR Smith

Stephan R Smith
Chief Engineer

SRS:ee
Attachments

cc: Bob McDonald
Bill Cagle
Lynn Belcher
Don Rasmussen
Paul Messinger
Ed Lafaye
R.G. Giles, Amoco Production Co.
John Dolan, American Quasar

**DAVIS OIL COMPANY**

110 — 17TH STREET, SUITE 1400
DENVER, COLORADO 80202-4472
TELEPHONE: 303-623-1000

NEW ORLEANS
HOUSTON
TULSA

RECEIVED
FEB 15 1984
DIVISION OF
OIL, GAS & MINING

February 13, 1984

Working Interest Owners
State of Utah
Nat'l. Res. & Energy
Oil, Gas, & Mining
To: → Ronald J. Firth
4241 State Office Bldg.
Salt Lake CIty, UT 84114

File: REB-70-WF
RE: Logan Federal #1
N. Pineview Field
Sec. 26 T3N R7E
Summit County, Utah

Gentlemen:

Attached is a copy of the Well Test and Sampling Procedure for Dew Point confirmation for the Logan Federal #1 proposed by Davis Oil Company.

Copies are being furnished to all North Pineview Working Interest Owners, the State of Utah Natural Resources and Energy Oil, Has, and Mining, and the USGS as per requested by the Utah Board of Oil, Gas, and Mining Docket # 84-015, Cause # 203-5 on January 26 and 27, 1984.

Prior notice is hereby given that the sampling by Core Labs will commence on the morning of Wednesday February 22, 1984.

If you have any questions concerning this matter please contact Mr. Bill Cagle at the above number.

Sincerely,

DAVIS OIL COMPANY

Robert E. Blaylock
Rocky Mountain Division Manager

BRC/dd
encl.

February 8, 1984
Logan Federal #1
N. Pineview Field
Sec. 26 T3N R7E
Summit County, Utah

# PROPOSED WELL TEST AND SAMPLING PROCEDURE FOR DEW POINT CONFIRMATION

**Test Rate:** The rate at which the surface samples will be taken is the current stabilized producing rate. This rate is approximately 300 BOPD, 2 BWPD, 2,700 MCFD. The attached production curve shows a stable GOR of ±9000 CF/BBL.

**Production Monitoring Prior to Sampling** Otis Engineering will monitor production rates through a single stage test separator 3 days prior to sampling. Separator pressure will be maintained at approximately 1000 psi. The following measurements will be taken on an hourly basis:

- WH Temperature
- WH Pressure (DWT)
- Casing Pressure (Gauge)
- Choke Setting
- Static Pressure and differential
- Gas Out Temperature
- Gas Specific Gravity (Daily)
- Condensate Rate at Separator Pressure (Meter)
- Condensate Temperature at Sampling Point
- Condensate gravity
- Tank Volumes
- Tank Liquid Temperature
- Ambient Temperature

**Production Monitoring the Day of Sampling** Measurement frequency will be increased to every ½ hour 12 hours prior to sampling. During the actual sampling, measurements will be taken every ¼ hour.

**BH Pressure and Temperature** Rig up wireline with Surface readout-HP BHP and BHT instrumentation. Go in hole making flowing gradient stops every 1000' in the hole. Hang instrument @ 12,726' WLM. Allow well to restablize 1 hour before sampling.

**Gas and Condensate Sampling** Six gas and six condensate samples will be taken by a Core Lab representative. Gas sampling will be by the evacuated cylinder method and condensate sampling will be by the gas displacement method. Cylinders will be marked with time, temperature, and pressure. Attached is a copy of Core Labs' sampling procedure for the above methods.

GOR Determination

With a single stage test unit considerable shrinkage will occur when the condensate is flashed from separator pressure to the tanks. Oil measurement for the purpose of GOR Determination will be by the positive displacement meter upstream of a SNAP Acting Dump valve. The oil rate will be checked by tank measurement and corrected by a flash calculation that will be performed once the condensate analysis is available.

BHP & BHT Determination

After sampling is complete, the well will be SI for at least 48 hours BHP Build-up. Once the pressure response has stabilized the tool will be lowered to just above PBTD and six temperature and pressure gradient stops will be recorded (one every 50'). This will allow extrapolation to a mid reservoir datum of 13,000' KB Sonic log depth or -5486' TVD Subsea. See attached explanation. The extrapolated temperature and pressure will be supplied to Core Labs.

Lab Testing of Samples

The six gas samples will be analyzed and if all 6 samples are consistant indicating that the well was stable during the sampling period, a recombination and dew point pressure determination will be performed on one representative set of gas-condensate samples.

Per the State of Utahs' "Findings of Fact, Conclusions of Law and Order", found under Order, Sec. 9:g, Davis Oil Company will give seven days notice prior to the date of the proposed test to the Division as well as all affected parties. All final reports will be sent directly to the aforementioned parties.

Permanent Datum
NORTH PINEVIEW FIELD

USE - 5486 TVD Subsea

which equates to numeric midpoint between the top of Nugget porosity and the gas water contact of -5668' TVD in the DOC Logan Federal #1.

Also equates to log depths shown:

| | | | |
|---|---|---|---|
| LOGAN #1 | = | 13000') | |
| LOGAN #2-A | = | 13230') | SONIC LOGS |
| AMOCO 544 | = | 12794') | |

PLOT# 00001

DAILY PRODUCTION FOR WELL # 38024-01 LOGAN FED #1

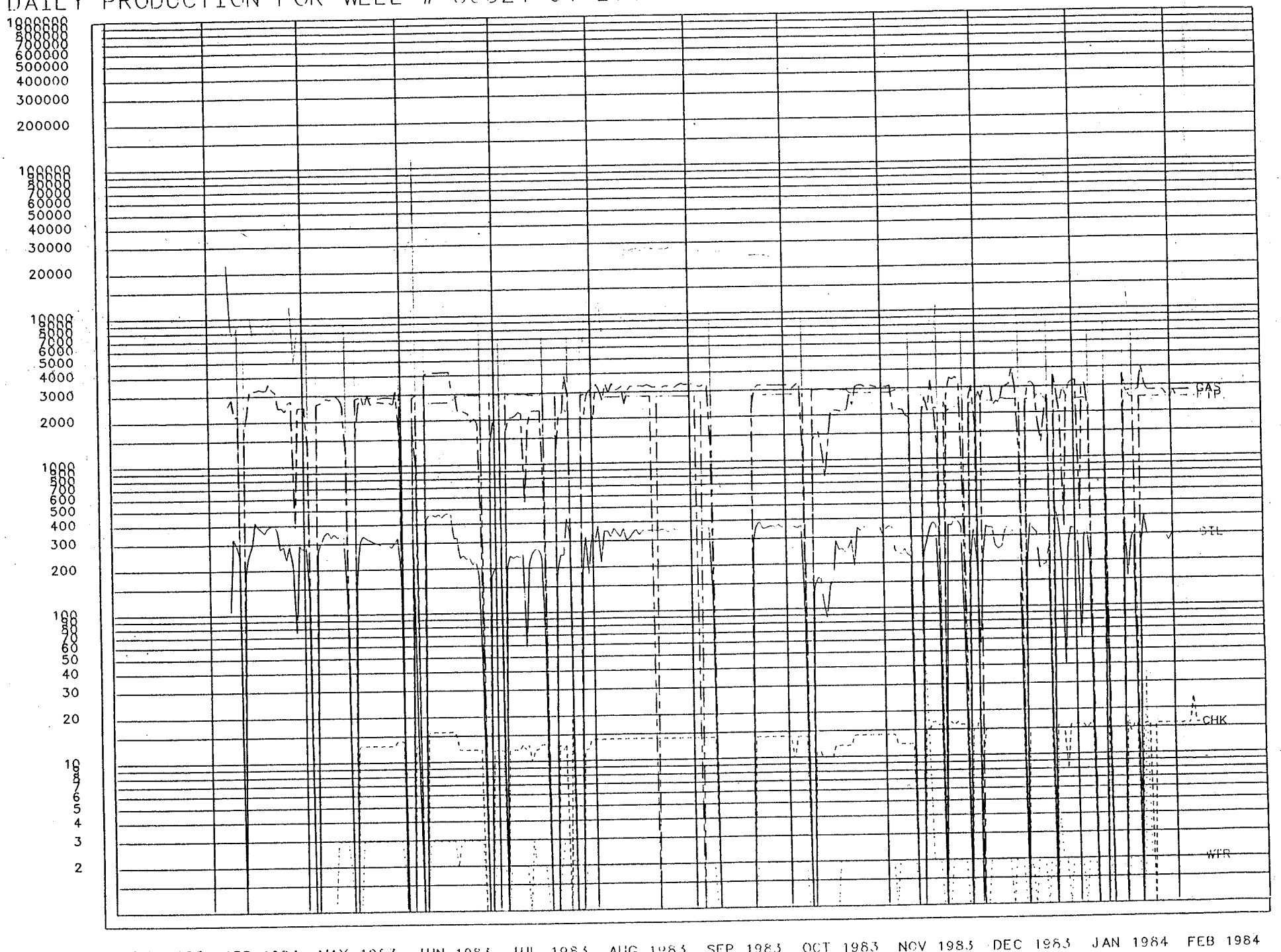

# SEPARATOR GAS SAMPLING

The EVACUATED CYLINDER method is recommended for all separator gas sampling. This is by far the simplest way to get good gas samples. The only disadvantage is that the gas sample cylinders must be thoroughly evacuated before being taken to the field. The vacuum removes virtually all air from the cylinder, and no excess liquid can accumulate in the cylinder since there is no purging.

If no evacuated cylinders can be obtained, the PURGE method is the second choice. Here the cylinders are filled with gas and then blown down several times. This will remove the air, but may contaminate the gas with heavy components.

Always contact the laboratory before sampling to determine the volume of gas that will be needed.

## Evacuated Cylinder Method

1. Evacuate all the gas cylinders and clean the sampling equipment before going to the field.

2. On location, select the gas and liquid sample source valves and remove all trash from them. Check both source valves by opening them briefly.

3. Connect a clean flexible hose to the gas source valve and one gas cylinder valve.

4. Purge the hose, tighten the fittings, and open the gas source valve.

5. Fill the gas cylinder slowly by cracking the cylinder inlet valve. You will hear gas flowing into the cylinder.

6. When the cylinder is full, close ALL the valves and disconnect the cylinder. Leave the hose connected to the source valve if more gas samples are needed, or if liquid samples will be taken by gas displacement.

7. Plug both cylinder valves.

8. Complete the tag and attach it to the cylinder inlet valve.

9. Always take at least two gas samples.

SEPARATOR GAS SAMPLING

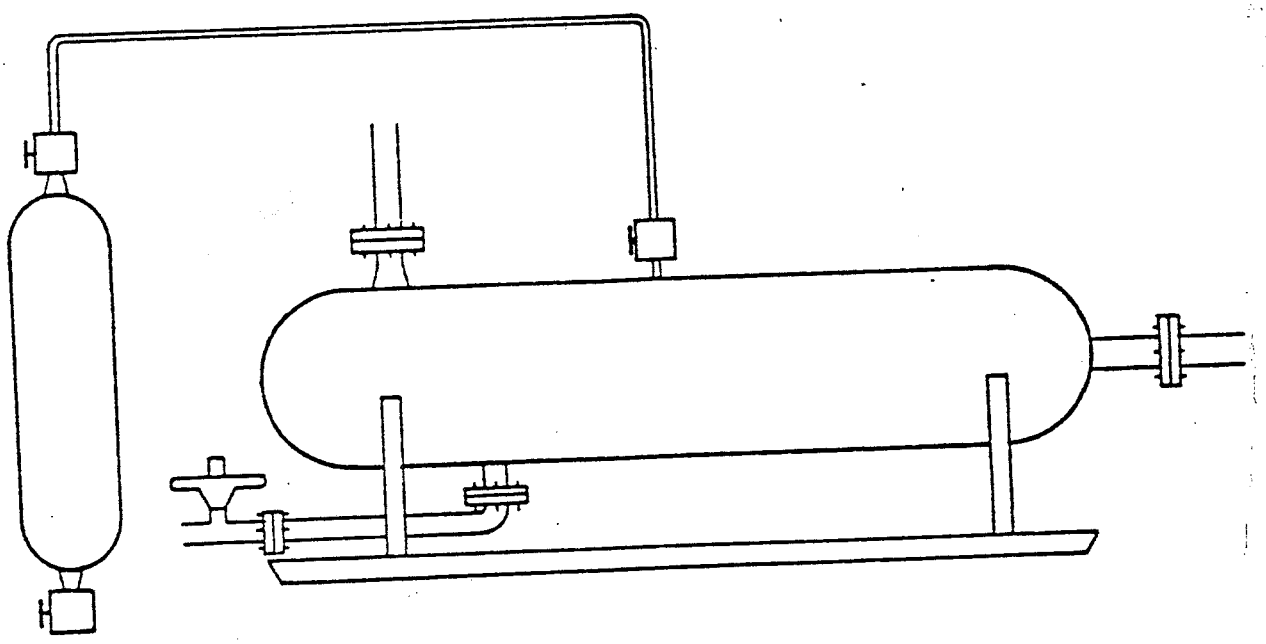

# SEPARATOR LIQUID SAMPLING

The GAS DISPLACEMENT method is recommended for collecting separator liquid samples. The cylinder is filled with separator gas, which is then displaced from the cylinder by separator liquid at the separator pressure. Since the pressure is not allowed to drop, the liquid composition cannot change during the displacement.

The most widely used method of liquid sampling is the WATER DISPLACEMENT method, in which separator liquid displaces water from the cylinder at separator pressure. Either liquid sampling method is perfectly acceptable.

## Gas Displacement Method

1. Fill the liquid cylinder with gas, vent the gas, and fill it with gas again.

2. Hang the cylinder upright in a convenient location.

3. Connect a clean flexible hose to the liquid source valve and the bottom cylinder valve.

4. Purge the hose, tighten the fittings, and open the liquid source valve.

5. Open the bottom cylinder valve. No liquid can enter the cylinder yet, since the cylinder is full of gas at separator pressure.

6. Crack the top cylinder valve and slowly bleed all the separator gas to the atmosphere. Control the flow rate to prevent pressure drop in the cylinder.

7. When liquid shows at the top cylinder valve, turn the cylinder upside down and continue producing liquid. Watch for water. After water production (if any) stops, close ALL the valves and disconnect the cylinder. Leave the hose connected to the source valve if more liquid samples are needed.

8. TAKE OUTAGE by allowing a small amount of liquid to flash out of the BOTTOM cylinder valve for about one second. This will not affect the sample quality, but is a very important safety procedure. Taking outage creates a small gas-cap in the cylinder.

9. Plug both cylinder valves.

10. Complete the tag and attach it to one of the cylinder valves.

11. Always take at least two liquid samples.

SEPARATOR LIQUID SAMPLING

BY GAS DISPLACEMENT

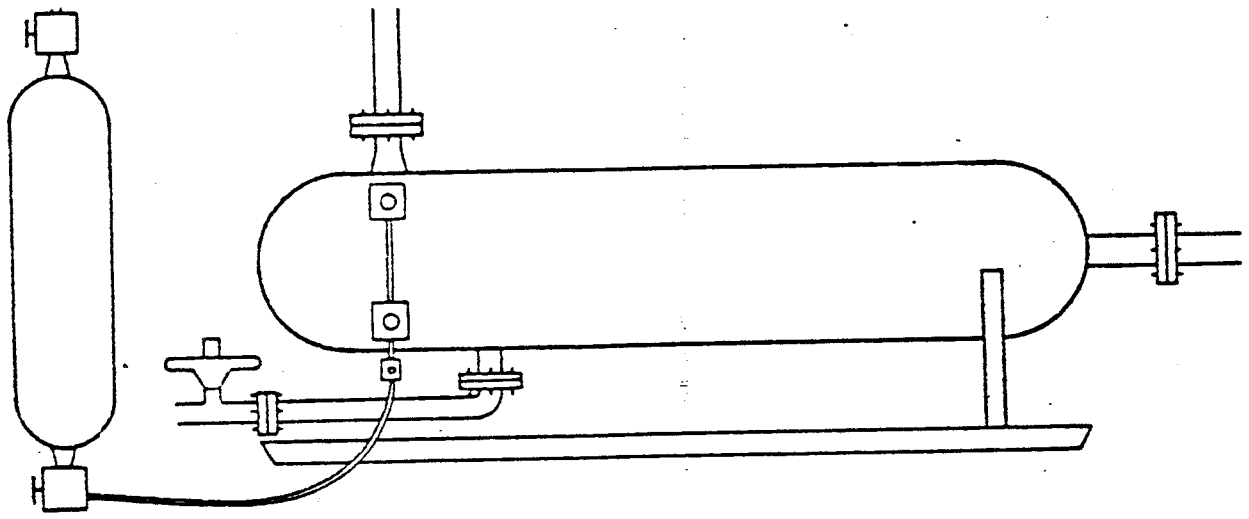

Water Displacement Method

1. Fill the liquid cylinders with water.

2. Hang the cylinder upright in a convenient location.

3. Connect a clean flexible hose to the liquid source valve and the top cylinder valve.

4. Purge the hose, tighten the fittings, and open the liquid source valve.

5. Open the top cylinder valve.

6. Crack the bottom cylinder valve and slowly drain all the water from the cylinder. Control the flow rate to prevent pressure drop in the cylinder.

7. When liquid shows at the bottom cylinder valve, close ALL valves and disconnect the cylinder. Leave the hose connected to the source valve if more liquid samples are needed.

8. TAKE OUTAGE by allowing a small amount of liquid to flash out of the BOTTOM cylinder valve for about one second. This will not affect the sample quality, but is a very important safety procedure. Taking outage creates a small gas-cap in the cylinder.

9. Plug both cylinder valves.

10. Complete the tag and attach it to the inlet valve.

11. Always take at least two liquid samples.

SEPARATOR LIQUID SAMPLING
BY WATER DISPLACEMENT

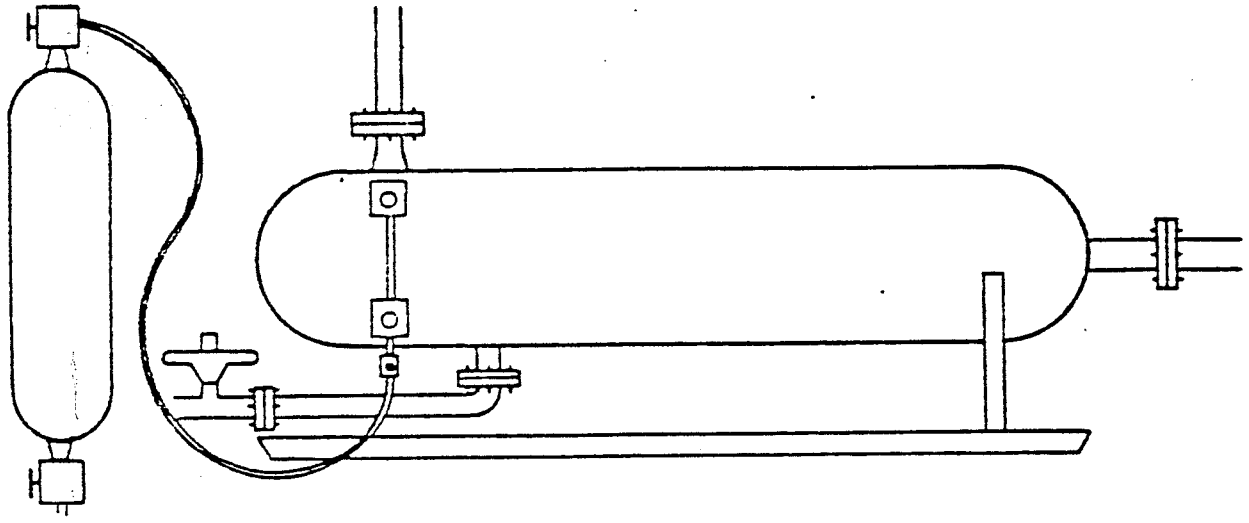

Form 3160-5
(November 1983)
(Formerly 9-331)

UNITED STATES
DEPARTMENT OF THE INTERIOR
BUREAU OF LAND MANAGEMENT

SUBMIT IN TRIPLICATE* (Other instructions on reverse side)

Form approved.
Budget Bureau No. 1004-0135
Expires August 31, 1985

# SUNDRY NOTICES AND REPORTS ON WELLS

(Do not use this form for proposals to drill or to deepen or plug back to a different reservoir. Use "APPLICATION FOR PERMIT—" for such proposals.)

5. LEASE DESIGNATION AND SERIAL NO.: U-47812

6. IF INDIAN, ALLOTTEE OR TRIBE NAME: -------

1. OIL WELL [X] GAS WELL [ ] OTHER

7. UNIT AGREEMENT NAME:

2. NAME OF OPERATOR: Davis Oil Company

8. FARM OR LEASE NAME: Logan Federal

3. ADDRESS OF OPERATOR: 410 17th St. Suite 1400 Denver, CO 80202

9. WELL NO.: 1 & 2-A

4. LOCATION OF WELL (Report location clearly and in accordance with any State requirements.* See also space 17 below.) At surface

SENE Sec. 26 T3N R7E Logan Federal #1
NWSE Sec. 26 T3N R7E Logan Federal #2-A

10. FIELD AND POOL, OR WILDCAT: North Pineview

11. SEC., T., R., M., OR BLK. AND SURVEY OR AREA: Sec. 26 T3N R7E

14. PERMIT NO.: #1- 43-043-330816
~~#2-A - 43-043-30223~~

15. ELEVATIONS (Show whether DF, RT, GR, etc.): 7498 GL, 7514 KB
~~7494 GL, 7520 KB~~

12. COUNTY OR PARISH: Summit

13. STATE: Utah

16. **Check Appropriate Box To Indicate Nature of Notice, Report, or Other Data**

| NOTICE OF INTENTION TO: | | | | SUBSEQUENT REPORT OF: | | | |
|---|---|---|---|---|---|---|---|
| TEST WATER SHUT-OFF | [ ] | PULL OR ALTER CASING | [ ] | WATER SHUT-OFF | [ ] | REPAIRING WELL | [ ] |
| FRACTURE TREAT | [ ] | MULTIPLE COMPLETE | [ ] | FRACTURE TREATMENT | [ ] | ALTERING CASING | [ ] |
| SHOOT OR ACIDIZE | [ ] | ABANDON* | [ ] | SHOOTING OR ACIDIZING | [ ] | ABANDONMENT* | [ ] |
| REPAIR WELL | [ ] | CHANGE PLANS | [ ] | (Other) | | | [ ] |
| (Other) | | VRU Installation | [ ] | (NOTE: Report results of multiple completion on Well Completion or Recompletion Report and Log form.) | | | |

17. DESCRIBE PROPOSED OR COMPLETED OPERATIONS (Clearly state all pertinent details, and give pertinent dates, including estimated date of starting any proposed work. If well is directionally drilled, give subsurface locations and measured and true vertical depths for all markers and zones pertinent to this work.)*

Davis Oil Company here by requests approval for site disturbance to install a Vapor Recovery Unit on the Logan Federal #1 Location. The Logan #2-A and the Logan Federal #1 will be utilizing the VRU since both wells are produced through a common battery on the #1 Location. Estimated date of initial construction is 6/4/84. We anticipate that the installation will be complete by July 4, 1984. Attached is a plot plan showing the placement of the LNG Storage tanks, compressor building, and associated lines. Estimated recovery will be 55 MCFD and 29 BBL Natural Gas Liquids per million cubic feet of inlet gas. Capital Expenditure for this project will exceed $360,000.

18. I hereby certify that the foregoing is true and correct

SIGNED REB TITLE Rocky Mountain Division Manager DATE 5/21/84

(This space for Federal or State office use)

APPROVED BY _____ TITLE _____ DATE _____
CONDITIONS OF APPROVAL, IF ANY:

***See Instructions on Reverse Side**

Title 18 U.S.C. Section 1001, makes it a crime for any person knowingly and willfully to make to any department or agency of the United States any false, fictitious or fraudulent statements or representations as to any matter within its jurisdiction.

01-20-1986

# CORE LABORATORIES, INC.
## ANALYTICAL REPORT

LAB #: W86008-1

APACHE CORPORATION

RECEIVED
MAY 19 86
OPERATIONS

WELL #: LOGAN FED. #1 FIELD:

COUNTY: SUMMIT STATE: UTAH LOCATION: SE NE SEC.21

FORMATION: INTERVAL:

DATE SAMPLED: 1/14/86 SAMPLE ORIGIN: SEPARATOR DUMP LINE

REMARKS:

| | MG/L | MEQ/L | | MG/L | MEQ/L | | MG/L |
|---|---|---|---|---|---|---|---|
| SODIUM | 14000 | 609.00 | SULFATE | 1520 | 31.62 | CALC. SODIUM | 13860 |
| POTASSIUM | 760 | 19.46 | CHLORIDE | 22600 | 637.32 | NACL EQUIVALENT | 39525 |
| CALCIUM | 870 | 43.41 | CARBONATE | 0 | 0.00 | CALC TDS* @356 F | 40071 |
| MAGNESIUM | 120 | 9.86 | BICARBONATE | 409 | 6.70 | API TDS* @221 F | 40279 |
| | | | HYDROXIDE | 0 | 0.00 | | |
| TOTAL CATIONS | | 681.73 | TOTAL ANIONS | | 675.64 | * TOTAL DISSOLVED SOLIDS | |

SPECIFIC RESISTANCE AT 68F (OHM-M):
OBSERVED 0.19
CALCULATED 0.17

OBSERVED pH 6.6

WATER ANALYSIS PATTERN
Scale
MEQ per Unit

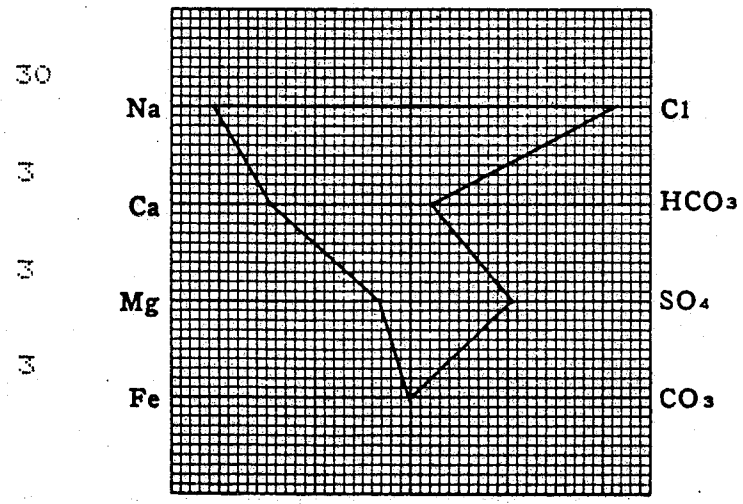


(Na value in above graph includes Na and K)

NOTE: Mg/1 = milligrams per liter
Meq/1 = milligram equivalent per liter

Sodium chloride equivalent = by Dunlap & Hawthorne calculation from components

These analyses, opinions or interpretations are based on observations and material supplied by the client to whom, and for whose exclusive and confidential use, this report is made. The interpretations or opinions expressed represent the best judgment of Core Laboratories, Inc. (all errors and omissions excepted); but Core Laboratories, Inc. and its officers and employees, assume no responsibility and make no warranty or representations, as to the productivity, proper operations, or profitableness of any oil, gas, coal or other mineral, property, well or sand in connection with which such report is used or relied upon.

**OTIS**
720 S. COLORADO BOULEVARD, SUITE 162
DENVER, COLORADO 80222

April 9, 1984

Mr. Steve Smith
Davis Oil Company
410 17th Street, Suite 1400
Denver, CO 80202

Re: Logan Federal No. 1
Summit County, UT
Flowback
1984 March 28, 1984

Dear Mr. Smith:

This report contains Test Results, oil flow rate calculations, and Field readings. The field gas flow rates were added to the test results because measurements through your production facility can not be run through our computer.

Total volumes produced during 4 hours of flow were, 579.5 mcsf gas, 60.8 bbls oil.

Thank you for the opportunity to perform this test. Questions concerning this test can be directed to this office at the above number.

Sincerely,

Dana Martinez

Dana Martinez
WDRG/Division

Davis Oil Company

✓Logan Federal No. 1

Summit County, UT

Flowback

28 March, 1984

RECEIVED
APR 12 1984
DIVISION OF OIL
GAS & MINING

Champlin Petroleum Co.
Frank D. McAtee
PO Box 1257
Englewood, CO 80150

American Quasar Petroleum Co.
Connie L. Wilson
2500 Ft. Worth National Bank Bldg.
Ft. Worth, TX 76102

Deca Energy Corp.
410 17th St.
Suite 2210
Denver, CO 80202

The Anschutz Corp.
Jack Haley
2400 Anaconda Tower
555 17th St.
Denver, CO 80202

Kennedy & Mitchell, Inc.
3190 South Wadsworth
Denver, CO 80227

Bill D. Farleigh
PO Box 3215
Casper, WY 82602

Shell Oil Company
1700 Broadway
Denver, CO 80290

Sun Production Company
PO BOX 2880
Da-las, TX 75221

Conquest Exploration Co.
4201 FM 1960 W.
Sutie 500
Houston, TX 77068

A & E Investment, Inc.
151 Farmington Ave.
Hartford, CN 06156

Century Chartering
650 5th Ave
Pter Ryan
New York, NY 10019

El Paso Exploration Co.
3535 East 30th St.
Farmington, NM 87401

Canadian- American Res.
2500 Ft. Worth Nat'l Bank
Ft. Worth, TX 76102

Sandefer Oil and Gas Inc.
G. Talkington
First City Tower
1001 Fann Suite 2300
Houston, TX 77002

State of Utah Nat'l Res. & Energy
Oil, Gas, & Mining
Ronald J. Firth
4241 State Office Bldg.
Salt Lake, UT 84114

USGS
University Club Bldg.
136 E. South Temple
Salt Lake, UT 84111

# TEST REPORT DISTRIBUTION LIST

COMPANY: Davis Oil Company

WELL: Logan Federal No. 1

AREA: Summit County, UT

TEST: Flowback

DATE: 28 March , 1984

COPIES OF THIS REPORT HAVE BEEN SENT TO THE FOLLOWING INDIVIDUALS OR COMPANIES:

| COPIES | RECIPIENTS |
|---|---|
| 3 | Davis Oil Company<br>410 17th St. Suite 1400<br>Denver, CO 80202<br>Attn: Steve Smith |
| 1 | Davis Oil Company<br>3211 Energy Lane, Suite 201<br>Casper, WY 82601<br>Attn: Jack Hale |
| 1 | Amoco Production Company<br>1670 Broadway, 7th Floor<br>Denver, CO 80202<br>Attn: Lon Buehner |
| 1 | Otis Eng. Corp<br>Box 2144<br>Casper, WY |
| 1 | Otis Eng. Corp<br>720 South Colo. Blvd.<br>Suite 164<br>Denver, CO 80202 |

TEST RESULTS.

OEC-865-1-C

BEST COPY AVAILABLE

| CUSTOMER | TEST NUMBER | WELL NAME OR NUMBER | AREA | RATE/BUILD-UP NUMBER | DATE (DAY MO YR) | PAGE |
|---|---|---|---|---|---|---|
| DAVIS OIL | 1 | LOGAN FEDERAL NO.1 | SUMMIT COUNTY | | 1984MAR28 | 1 |

| OIL GRAVITY @ 60°F (°API) | GAS SPECIFIC GRAVITY (AIR = 1) | INTERVAL TESTED (FEET) | STANDARD CONDITIONS PRESS 14.73 TEMP |
|---|---|---|---|
| 0.00 | | | |

| DAY / TIME (24 HR CLOCK) | FLOW OR SHUT-IN TIME (HOURS) | WELL HEAD PRESSURE (psi) | WELL HEAD TEMP (°F) | CHOKE SIZE (64TH INCH) | SEPARATOR PRESSURE (psi) | BOTTOM HOLE PRESSURE @ DEPTH (FT) (psi) | BOTTOM HOLE TEMP @ DEPTH (FT) (°F) | CORRECTED GAS FLOW RATE $Q_g$ (MSCF/D) | CORRECTED OIL FLOW RATE $Q_o$ (STO BPD) | WATER FLOW RATE (BPD) | GOR (MSCF/STO BBL) | OGR (STO BBL/MSCF) | WOR (BBL/STO BBL) | WGR (BBL/MMSCF) | PT (bbl/psi) LGR (bbl/mmscf) |
|---|---|---|---|---|---|---|---|---|---|---|---|---|---|---|---|
| 28 14h10m | 0.000 | 0 | BEGIN TEST. 92 | 0 | | | | | | | | | | | |
| 28 15h10m | 1.000 | 2666 | 92 | 0 | | | | | 0.00 | | | | | | |
| 28 16h10m | 2.000 | 2671 | 92 | 0 | | | | 3529.0 | 354.90 | | | | | | |
| 28 17h10m | 3.000 | 2670 | 92 | 0 | | | | 3453.0 | 375.18 | | | | | | |
| 28 18h10m | 4.000 | 2667 | 92 | 0 | | | | 3535.4 | 182.52 | | | | | | |
| 28 18h30m | 4.333 | 0 | END FLOW. 92 | 0 | | | | 3390.8 | 182.52 | | | | | | |
| | | | | | | | | | 0.00 | | | | | | |

TOTAL WELL EFFLUENTS PRODUCED

FLOW TIME FROM 14h10m TO 18h30m

NUMBER FOR RATE

GAS ( MSCF): 0.0 OIL (BBLS): 60.8 WATER (BBLS): 0.0

FLOW TIME/END FOR TEST UP TO END

NUMBER OF RATE TEST

GAS ( MSCF): 0.0 OIL (BBLS): 60.8 WATER (BBLS): 0.0

BEST COPY AVAILABLE

# OIL FLOW RATE CALCULATIONS-TANK MEASUREMENTS

OEC—871-1-B

| TEST NUMBER | RATE NUMBER | AREA | DATE (DAY MO YR) | PAGE OF |
|---|---|---|---|---|
| 1 | | SUMMIT COUNTY | 1984MAR28 | 1 |

| CUSTOMER | WELL NAME OR NUMBER | STO GRAVITY (API) @ 60 °F | STANDARD CONDITIONS | |
|---|---|---|---|---|
| DAVIS OIL | LOGAN FEDERAL NO.1 | 49.75 | 14.73 PRESS. | 60 TEMP |

| TANK # 1 CAPACITY (BBLS) | TANK # 1 INSIDE DIMENSIONS (INCHES) | BBLS PER INCH FOR TANK # 1 | TANK # 2 CAPACITY (BBLS) | TANK # 2 INSIDE DIMENSIONS (INCHES) | BBLS PER INCH FOR TANK # 2 |
|---|---|---|---|---|---|
| 400 | | 1.670 | 400 | | 1.670 |

| | DAY / TIME (24 HR CLOCK) | FLOW TIME (HOURS) | TANK USED (1 OR 2) | FIELD OIL TANK READINGS (INCHES) | INCREASE IN TANK READINGS SINCE LAST READING (INCHES) | VOLUME BY TANK SINCE LAST READING $V_t$ (BBLS) | TANK TEMP. (°F) | k FROM ASTM TABLES | BSW (%) | CORRECTED OIL VOLUME $V_o = V_t k (1-BSW/100)$ (STO BBLS) | CORRECTED OIL FLOW RATE $Q_o$ (STO BFD) | CORRECTED GAS FLOW RATE FROM GAS FLOW RATE CALC FORM $Q_g$ (MSCF/D) | GOR (MSCF / STO BBL) X / OGR (STO BBL / MMSCF) | |
|---|---|---|---|---|---|---|---|---|---|---|---|---|---|---|
| 1 | 28 15h10m | 1.000 | 1 | 24.25 | 8.75 | 14.61 | 38 | 1.0120 | 0.00 | 14.79 | 354.90 | 0.00 | 0.00 | |
| 2 | 28 16h10m | 2.000 | 2 | 59.00 | 9.25 | 15.45 | 38 | 1.0120 | 0.00 | 15.63 | 375.18 | 0.00 | 0.00 | |
| 3 | 28 17h10m | 3.000 | 1 | 33.25 | 9.00 | 15.03 | 38 | 1.0120 | 0.00 | 15.21 | 182.52 | 0.00 | 0.00 | |
| 4 | 28 18h10m | 4.000 | 2 | 68.00 | 9.00 | 15.03 | 38 | 1.0120 | 0.00 | 15.21 | 182.52 | 0.00 | 0.00 | |
| 5 | | | | | | | | | | | | | | |
| 6 | | | | | | | | | | | | | | |
| 7 | | | | | | | | | | | | | | |
| 8 | | | | | | | | | | | | | | |
| 9 | | | | | | | | | | | | | | |
| 10 | | | | | | | | | | | | | | |
| 11 | | | | | | | | | | | | | | |
| 12 | | | | | | | | | | | | | | |
| 13 | | | | | | | | | | | | | | |
| 14 | | | | | | | | | | | | | | |
| 15 | | | | | | | | | | | | | | |
| 16 | | | | | | | | | | | | | | |
| 17 | | | | | | | | | | | | | | |
| 18 | | | | | | | | | | | | | | |

FIELD READINGS
SINGLE STAGE UNIT
OEC - 905-1-A

**BEST COPY AVAILABLE**

| TEST NO. | WELL NAME OR NUMBER | TEST UNIT DESCRIPTION | DATE (DAY, MO., YR.) | PAGE | OF |
|---|---|---|---|---|---|
| 1 | LOGAN FEDERAL NO.1 | | 1984MAR28 | 1 | 1 |

| CUSTOMER | FIELD | FORMATION | OIL METER SIZE | METER RANGE (BBLS) |
|---|---|---|---|---|
| DAVIS OIL | | NUGGET | 0.000 | |

| INTERVAL TESTED | BHP SURVEY DEPTH | GAS PRODUCED TO | GAS METER RUN SIZE | DIFF. RANGE (INS. $H_2O$) | STATIC PRESSURE TAKEN |
|---|---|---|---|---|---|
| (FT.) | () (FT.) | ☐ PIPELINE ☐ FLARE | (INS) | | ☐ UPSTREAM ☐ DOWNSTREAM |

| TIME | | WELLHEAD DATA | | | DOWNHOLE DATA | | FLOW CONTROL | | GAS METERING | | | | | OIL OR CONDENSATE METERING | | | | WATER METERING | |
|---|---|---|---|---|---|---|---|---|---|---|---|---|---|---|---|---|---|---|---|
| DAY | FLOW OR SHUT-IN DURATION | TUBING PRESS. | TEMP. | CASING PRESS. | BHP | BHT | MAN. CHOKE | HEATER CHOKE | ORIFICE SIZE | STATIC PRESS. | DIFF. PRESS. | TEMP. | GAS GRAVITY (AIR=1) | # 1 TANK OR METER READING | # 1 OIL TEMP | OIL GRAVITY | $W_f$ | # 1 TANK OR METER READING | SALINITY |
| 24 HOUR CLOCK | (HOURS) | (PSIG) | (°F) | (PSIG) | (PSIG) | (°F) | (64TH IN) | (64TH IN) | (INS) | (PSIG) | (IN $H_2O$) | (°F) | % $H_2S$ | # 2 TANK OR METER READING (INS OR BBL) | # 2 OIL TEMP (°F) | @ 60°F °API | BSW (%) | # 2 TANK OR METER READING (INS OR BBL) | SAL. (PPM) |
| 1 28 | 0.000 | BEGIN TEST. | | | | | | | | | | 1 | | 0.00 | 0 | | 0.000 | | 1 |
| 14h10m | | 0 | 92 | 0 | 0.0 | 0 | 0 | 0 | | | | | | 0.00 | 0 | 0.0 | 0.0 | | |
| 2 28 | 1.000 | | | | | | | | | | | 2 | | 24.25 | 38 | | 1.000 | | |
| 15h10m | | 2666 | 92 | 2860 | 0.0 | 0 | 0 | 0 | | | | | | 0.00 | 0 | 49.8 | 0.0 | | |
| 3 28 | 2.000 | | | | | | | | | | | 3 | | 0.00 | 0 | | 1.000 | | 3 |
| 16h10m | | 2671 | 92 | 2830 | 0.0 | 0 | 0 | 0 | | | | | | 59.00 | 38 | 49.8 | 0.0 | | |
| 4 28 | 3.000 | | | | | | | | | | | 4 | | 33.25 | 38 | | 1.000 | | 4 |
| 17h10m | | 2670 | 92 | 2800 | 0.0 | 0 | 0 | 0 | | | | | | 0.00 | 0 | 49.8 | 0.0 | | |
| 5 28 | 4.000 | | | | | | | | | | | 5 | | 0.00 | 0 | | 1.000 | | 5 |
| 18h10m | | 2667 | 92 | 2750 | 0.0 | 0 | 0 | 0 | | | | | | 68.00 | 38 | 49.8 | 0.0 | | |
| 6 28 | 4.333 | END FLOW. | | | | | | | | | | 6 | | 0.00 | 0 | | 0.000 | | 6 |
| 18h30m | | 0 | 92 | 0 | 0.0 | 0 | 0 | 0 | | | | | | 0.00 | 0 | 0.0 | 0.0 | | |
| 7 | | | | | | | | | | | | 7 | | | | | | | 7 |
| 8 | | | | | | | | | | | | 8 | | | | | | | 8 |
| 9 | | | | | | | | | | | | 9 | | | | | | | 9 |
| 10 | | | | | | | | | | | | 10 | | | | | | | |
| 11 | | | | | | | | | | | | 11 | | | | | | | 11 |
| 12 | | | | | | | | | | | | 12 | | | | | | | 12 |
| 13 | | | | | | | | | | | | 13 | | | | | | | 13 |
| 14 | | | | | | | | | | | | 14 | | | | | | | 14 |
| 15 | | | | | | | | | | | | 15 | | | | | | | 15 |
| 16 | | | | | | | | | | | | 16 | | | | | | | 16 |
| 17 | | | | | | | | | | | | 17 | | | | | | | 17 |

DAVIS OIL COMPANY 110 — 17TH STREET, SUITE 1400
DENVER, COLORADO 80202-4472
TELEPHONE: 303-623-1000

NEW ORLEANS
HOUSTON
TULSA

RECEIVED
APR 22 1984
DIVISION OF OIL
GAS & MINING

April 19, 1984 May Hearing
Application/Amoco

Director
Utah Division of Oil, Gas and Mining
4241 State Office Building
Salt Lake City, UT 84114

May 15th to File Motions
Exhibits
Deadline

Attn: Norm Stout

File: SRS-104-031.131

Re: Cause #203-1
Establishment of 80 Acre
Drilling and Spacing Units
For the North Pineview Field
of Summit County, Utah

Dear Mr. Stout:

The Utah Board of Oil, Gas and Mining entered into an order October 29, 1982, establishing 80 acre drilling and spacing units for the below described area:

T3N-R7E, Summit County, Utah

| | |
|---|---|
| Section 25 | W/2 |
| Section 26 | All |
| Section 35 | N/2 |
| Section 36 | NW/4 |

Paragraph 4 of the order states:

"4. The operator of each well shall be required to take a bottom hole pressure test for each well every thirty (30) days and promptly report the results to the Division of Oil, Gas and Mining until further Order of this Board."

Deliveries from the #1 Logan Federal (SE NE 26-T3N-R7E), commenced on April 6, 1983 at a rate of 2567 Mcfd and 233 bcpd. On March 28, 1984, the well was shut-in for a bottom hole pressure buildup survey after cumulating an estimated 849,464 Mcf (2723 Mcfd average for 312 days), and 90,850 bbls (291 bcpd average for 312 days). The results of this survey are attached hereto and presented below:

Initial Res. (psia) 5043 psia
- 4975 psia
> 68 psia

| | | |
|---|---|---|
| Initial reservoir pressure @12865' (midpoint of perforations) | = 5022.85 psia @12865' midpt perfs | or 5042.67 psia @13000' midpt reservoir |
| Reservoir pressure from buildup of 3/28/84 = 4934.87 psia @12,726 calculated at 12865' (.144 psi/ft) | = 4955.3 psia @12865' midpt perfs | or 4975.1 psia @13000' midpt reservoir |
| Calculated loss in reservoir pressure | = 67.6 psia @12865' midpt perfs | or 67.6 psia @13000' midpt reservoir ✓ |

Reservoir Pressure History

| Date | Pressure @ 12865' | Pressure @ 13000' | Cumulative Mcf | Production Bbls |
|---|---|---|---|---|
| 8/29/82 | 5022.85 | 5042.7 | Initial | Pressure |
| 5/1/83 | 5000.58 | 5020.4 | 65,346 | 7,276 |
| 5/31/83 | 4994.70 | 5014.5 | 130,284 | 14,249 |
| 7/23/83 | 4983.38 | 5003.2 | 235,786 | 25,996 |
| 9/6/83 | 4976.45 | 4996.3 | 346,539 | 39,981 |
| 10/5/83 | 4976.25 | 4996.1 | 418,494 | 46,045 |
| 11/17/83 | 4976.50 | 4996.3 | 521,381 | 56,395 |
| 12/13/83 | 4960.50 | 4980.3 | 582,506 | 62,876 |
| 1/10/84 | 4965.50 | 4985.3 | 644,827 | 69,128 |
| 2/22/84 | 4961.50 | 4981.3 | 756,263 | 80,504 |
| 3/28/84 | 4955.30 | 4975.1 ✓ | 849,464 | 90,850 |

Init. Res 5043
Dew pt 4875
> 168 psia

Paragraph 5 of the order states:

"5. Until a pressure maintenance system is approved by this Board and placed in operation for any well, production of gas and condensate from each such well within the spaced area may not exceed 350 barrels of condensate per day and 4 million cubic feet of gas per day, as long as the reservoir pressure is 150 psi or more above the retrograde dew point. ✓ If any bottom hole pressure test referred to above shows that the reservoir pressure is less than 150 psi above the retrograde dew point, all production from such well shall forthwith cease and said well shall be shut-in until the pressure in the well separately measured can be maintained at least 150 psi above the dew point, or until further Order of this Board."

Dew point Difference

4875
-4743
+132

4/23/84
4863
+12
4875 psia

Director
Utah Division of Oil, Gas and Mining
Page 3

| | | |
|---|---|---|
| Dew point pressure from Core Laboratory study of 10/5/82 = 4731 psig = 4743 psia | = 4743 psia | |
| Dew point pressure +150 psi | = 4893 psia | |
| Reservoir pressure (3/28/84) | = 4955 | or 4975 psi @13000' midpt reservoir |

4875
+150
5075

The #1 Logan Federal remains 62 psi (@12865' midpt perfs) or 82 psi (@13000' midpt reservoir) above the pressure limit set by the Utah Board.

A copy of the referenced pressure measurements is attached.

By separate mailing, Otis Engineering has transmitted a copy of the buildup report to working interest owners in the North Pineview field and to the State of Utah.

If you have any questions, please advise.

Yours very truly,

DAVIS OIL COMPANY

225°F 4731# DAVIS (mitch)

SR Smith

Stephan R Smith
Chief Engineer

4863# DAVIS (nell)

SRS:ee
Attachments

cc: Bob McDonald
Bill Cagle
Lynn Belcher
Don Rasmussen
Paul Messinger
Ed Lafaye
G.E. Talkington, Sandefer Oil & Gas Co.
Field WIOs

218°F 4930# AMOCO (#544 P-1)

Form OGC-1b

SUBMIT IN TRIPLICATE
(Other instructions on reverse side)

STATE OF UTAH
DEPARTMENT OF NATURAL RESOURCES
DIVISION OF OIL, GAS, AND MINING

# SUNDRY NOTICES AND REPORTS ON WELLS

(Do not use this form for proposals to drill or to deepen or plug back to a different reservoir. Use "APPLICATION FOR PERMIT—" for such proposals.)

RECEIVED
OCT 24 1985
DIVISION OF OIL GAS & MINING

1. OIL WELL [X] GAS WELL [ ] OTHER

2. NAME OF OPERATOR: DAVIS OIL COMPANY

3. ADDRESS OF OPERATOR: 410 - 17th St., Suite 1400, Denver, CO 80202

4. LOCATION OF WELL (Report location clearly and in accordance with any State requirements. See also space 17 below.) At surface: SE NE Sec. 26-T3N-R7E; 1658' FNL 690' FEL

5. LEASE DESIGNATION AND SERIAL NO.: U-47812

6. IF INDIAN, ALLOTTEE OR TRIBE NAME: ---

7. UNIT AGREEMENT NAME: ----

8. FARM OR LEASE NAME: Logan Federal

9. WELL NO.: #1

10. FIELD AND POOL, OR WILDCAT: Undetermined

11. SEC., T., R., M., OR BLK. AND SURVEY OR AREA: Sec. 26-T3N-R7E

14. PERMIT NO.: 43-043-30186

15. ELEVATIONS (Show whether DF, RT, GR, etc.): 7489' GL 7514' KB

12. COUNTY OR PARISH: Summit

13. STATE: Utah

16. Check Appropriate Box To Indicate Nature of Notice, Report, or Other Data

NOTICE OF INTENTION TO:

| | | | |
|---|---|---|---|
| TEST WATER SHUT-OFF | [ ] | PULL OR ALTER CASING | [ ] |
| FRACTURE TREAT | [ ] | MULTIPLE COMPLETE | [ ] |
| SHOOT OR ACIDIZE | [ ] | ABANDON* | [ ] |
| REPAIR WELL | [ ] | CHANGE PLANS | [ ] |
| (Other) | | | [X] |

SUBSEQUENT REPORT OF:

| | | | |
|---|---|---|---|
| WATER SHUT-OFF | [ ] | REPAIRING WELL | [ ] |
| FRACTURE TREATMENT | [ ] | ALTERING CASING | [ ] |
| SHOOTING OR ACIDIZING | [ ] | ABANDONMENT* | [ ] |
| (Other) | | | [ ] |

(NOTE: Report results of multiple completion on Well Completion or Recompletion Report and Log form.)

17. DESCRIBE PROPOSED OR COMPLETED OPERATIONS (Clearly state all pertinent details, and give pertinent dates, including estimated date of starting any proposed work. If well is directionally drilled, give subsurface locations and measured and true vertical depths for all markers and zones pertinent to this work.)*

DAVIS OIL COMPANY has sold its working interest in the Logan Federal #1 to:

APC Operating Partnership
One United Bank Center, Suite 4900
1700 Lincoln St.
Denver, CO 80203-4549

Tele (303) 831-6500

APC Operating Partnership began operating the #1 Logan Federal on June 1, 1985

18. I hereby certify that the foregoing is true and correct

SIGNED [signature] TITLE Chief Engineer DATE 10/17/85

(This space for Federal or State office use)

APPROVED BY _____ TITLE _____ DATE _____

CONDITIONS OF APPROVAL, IF ANY:

*See Instructions on Reverse Side

SUITE 4900 ONE UNITED BANK CENTER/1700 LINCOLN STREET/DENVER, CO 80203-4549

Apache CORPORATION

303/831-6500

May 21, 1986

File No. DES-460

RECEIVED
MAY 23 1986
DIVISION OF
OIL, GAS & MINING

State of Utah
Division of Oil, Gas and Mining
355 W. North Temple
Salt Lake City, Utah 84180

Re: Logan Federal #1 WEll
Section 26 T3N R7E
Summit County, Utah

Gentlemen:

Enclosed please find a copy of the Notice of Intention and Subsequent Report of changing water disposal ponds, along with an attached water analysis for the subject well.

If you have any questions please advise.

Sincerely,

Jill D. Henderson

Jill D. Henderson
Engineering Technician

JH:bc
Enclosure

Form 3160-5
(November 1983)
(Formerly 9-331)

UNITED STATES
DEPARTMENT OF THE INTERIOR
BUREAU OF LAND MANAGEMENT

SUBMIT IN TRIPLICATE*
(Other instructions on reverse side)

Form approved.
Budget Bureau No. 1004-0135
Expires August 31, 1985

# SUNDRY NOTICES AND REPORTS ON WELLS

(Do not use this form for proposals to drill or to deepen or plug back to a different reservoir. Use "APPLICATION FOR PERMIT—" for such proposals.)

5. LEASE DESIGNATION AND SERIAL NO.: U-47812

6. IF INDIAN, ALLOTTEE OR TRIBE NAME:

1. OIL WELL [X] GAS WELL [ ] OTHER

7. UNIT AGREEMENT NAME:

2. NAME OF OPERATOR: Apache Corporation

8. FARM OR LEASE NAME: Logan Federal

3. ADDRESS OF OPERATOR: 1700 Lincoln St., Suite 4900, Denver, CO 80203

9. WELL NO.: #1

4. LOCATION OF WELL (Report location clearly and in accordance with any State requirements.* See also space 17 below.) At surface: SE NE 1,658' FNL & 690' FEL

10. FIELD AND POOL, OR WILDCAT:

11. SEC., T., R., M., OR BLK. AND SURVEY OR AREA: Sec. 26 T3N R7E

14. PERMIT NO.: 43-043 30186

15. ELEVATIONS (Show whether DF, RT, GR, etc.): 7,489' GL, 7,514' KB

12. COUNTY OR PARISH: Summit

13. STATE: Utah

16. **Check Appropriate Box To Indicate Nature of Notice, Report, or Other Data**

| NOTICE OF INTENTION TO: | | | | SUBSEQUENT REPORT OF: | | | |
|---|---|---|---|---|---|---|---|
| TEST WATER SHUT-OFF | [ ] | PULL OR ALTER CASING | [ ] | WATER SHUT-OFF | [ ] | REPAIRING WELL | [ ] |
| FRACTURE TREAT | [ ] | MULTIPLE COMPLETE | [ ] | FRACTURE TREATMENT | [ ] | ALTERING CASING | [ ] |
| SHOOT OR ACIDIZE | [ ] | ABANDON* | [ ] | SHOOTING OR ACIDIZING | [ ] | ABANDONMENT* | [ ] |
| REPAIR WELL | [ ] | CHANGE PLANS | [ ] | (Other) | | | [ ] |
| (Other) Change water disposal ponds | | | [X] | (NOTE: Report results of multiple completion on Well Completion or Recompletion Report and Log form.) | | | |

17. DESCRIBE PROPOSED OR COMPLETED OPERATIONS (Clearly state all pertinent details, and give pertinent dates, including estimated date of starting any proposed work. If well is directionally drilled, give subsurface locations and measured and true vertical depths for all markers and zones pertinent to this work.)*

Apache Corporation has made arrangements effective May 1, 1986 to begin disposing produced water from the Logan Federal #1 into Robinson's disposal pit which has been approved by State of Utah Department of Health (see attached list). Also attached please find a copy of a water analysis for the subject well. We will be disposing of approximately 150-200 barrels of water per day.

RECEIVED
MAY 23 1986
DIVISION OF
OIL, GAS & MINING

18. I hereby certify that the foregoing is true and correct

SIGNED Tony Koenig TITLE Operations Engineer DATE May 21, 1986

(This space for Federal or State office use)

APPROVED BY _____ TITLE _____ DATE _____

CONDITIONS OF APPROVAL, IF ANY:

*See Instructions on Reverse Side

Title 18 U.S.C. Section 1001, makes it a crime for any person knowingly and willfully to make to any department or agency of the United States any false, fictitious or fraudulent statements or representations as to any matter within its jurisdiction.

FILE COPY

STATE OF UTAH
DEPARTMENT OF HEALTH

NORMAN H. BANGERTER, GOVERNOR

SUZANNE DANDOY, M.D., M.P.H., EXECUTIVE DIRECTOR

533-6146

| Route To | Initial | Date |
|---|---|---|
| BLN | TLB | 5/15 |
| | | |
| | | |

Jill Henderson
Apache Corp
1700 lincoln st, suit 4900
Denver, CO 80203

Gentlemen:

Shown below is a listing of disposal ponds which have been determined to be in compliance with Part VI of the "Utah Wastewater Disposal Regulations" and have been approved for use by the Utah Water Pollution Control Committee.

| Owner | Sec | Location | | Area | County |
|---|---|---|---|---|---|
| Grant Bleazard | 30 | T2S | R4W | Blue Bench | Duchesne |
| Max Chapoose | 27 | T1N | R2W | Neola | Duchesne |
| Grant Hansen | 8 | T3S | R3W | Arcadia | Duchesne |
| Hansen - Mitchell | 8 | T3S | R4W | Arcadia | Duchesne |
| Marathon Oil Co. | 23 | T38S | R25W | Tin Cup Mesa | San Juan |
| Dave Murray | 12 | T~~R~~5S | R19E | Lapoint | Uintah |
| Sutherland Constr. | 13 | T39S | R24E | Hatch Trading Post | San Juan |
| Ronald Robinson | 1 | T2N | R5E | Chalk Creek | Summit |
| Grand County | 34 | T29S | R24E | Lisbon Valley | San Juan |
| Grand County | 30 | T21S | R22E | Cisco | Grand |
| Hay Hot Oil | 14 | T40S | K22E | Bluff | San Juan |

It should be noted that other applications have been submitted to the committee for approval.

Sincerely,

UTAH WATER POLLUTION CONTROL COMMITTEE

Calvin K. Sudweeks
Executive Secretary

BLN:jm
278

RECEIVED
MAY 19 86
OPERATIONS

Form 3160-5
(November 1983)
(Formerly 9-331)

UNITED STATES
DEPARTMENT OF THE INTERIOR
BUREAU OF LAND MANAGEMENT

SUBMIT IN TRIPLICATE*
(Other instructions on reverse side)

111036

Form approved.
Budget Bureau No. 1004-0135
Expires August 31, 1985

# SUNDRY NOTICES AND REPORTS ON WELLS

(Do not use this form for proposals to drill or to deepen or plug back to a different reservoir. Use "APPLICATION FOR PERMIT—" for such proposals.)

5. LEASE DESIGNATION AND SERIAL NO.: U-47812

6. IF INDIAN, ALLOTTEE OR TRIBE NAME: ----

1. OIL WELL [X] GAS WELL [ ] OTHER

7. UNIT AGREEMENT NAME: ---

2. NAME OF OPERATOR: Apache Corporation

8. FARM OR LEASE NAME: Logan Federal

3. ADDRESS OF OPERATOR: 1700 Lincoln, Ste. 4900, Denver, Colorado 80203-4549

9. WELL NO.: #1

4. LOCATION OF WELL (Report location clearly and in accordance with any State requirements.* See also space 17 below.) At surface: 1659' FNL & 689' FEL

10. FIELD AND POOL, OR WILDCAT: Wildcat

11. SEC., T., R., M., OR BLK. AND SURVEY OR AREA: SENE 26-T3N-R7E

14. PERMIT NO.:

15. ELEVATIONS (Show whether DF, RT, GR, etc.): 7507'

12. COUNTY OR PARISH: Summit

13. STATE: Utah

16. **Check Appropriate Box To Indicate Nature of Notice, Report, or Other Data**

| NOTICE OF INTENTION TO: | | | | SUBSEQUENT REPORT OF: | | | |
|---|---|---|---|---|---|---|---|
| TEST WATER SHUT-OFF | [ ] | PULL OR ALTER CASING | [ ] | WATER SHUT-OFF | [ ] | REPAIRING WELL | [ ] |
| FRACTURE TREAT | [ ] | MULTIPLE COMPLETE | [ ] | FRACTURE TREATMENT | [ ] | ALTERING CASING | [ ] |
| SHOOT OR ACIDIZE | [ ] | ABANDON* | [ ] | SHOOTING OR ACIDIZING | [ ] | ABANDONMENT* | [ ] |
| REPAIR WELL | [ ] | CHANGE PLANS | [ ] | (Other) | | | [ ] |
| (Other) | | | [XX] | | | | |

(NOTE: Report results of multiple completion on Well Completion or Recompletion Report and Log form.)

17. DESCRIBE PROPOSED OR COMPLETED OPERATIONS (Clearly state all pertinent details, and give pertinent dates, including estimated date of starting any proposed work. If well is directionally drilled, give subsurface locations and measured and true vertical depths for all markers and zones pertinent to this work.)*

This is a followup to verbal approval from Bob Hendricks on 11/3/86 concerning Apache Corporation request to pull tubing and install a downhole safety shut-off valve approximately 500'. The purpose of the valve is to shut the well in should the casing be sheared off from a landslide. The valve will not cause any obstruction to the production under normal operation.

RECEIVED
NOV 07 1986
DIVISION OF
OIL, GAS & MINING

18. I hereby certify that the foregoing is true and correct

SIGNED Alex Nash, Jr. TITLE S. Division Operations Supervisor DATE 11/5/86

(This space for Federal or State office use)

APPROVED BY _____ TITLE _____ DATE _____

CONDITIONS OF APPROVAL, IF ANY:

ACCEPTED BY THE STATE OF UTAH DIVISION OF OIL, GAS, AND MINING
DATE: 11-10-86
BY: John R. Baza

**Federal approval of this action is required before commencing operations**

*See Instructions on Reverse Side

Title 18 U.S.C. Section 1001, makes it a crime for any person knowingly and willfully to make to any department or agency of the United States any false, fictitious or fraudulent statements or representations as to any matter within its jurisdiction.

UTAH NATURAL RESOURCES
Oil, Gas & Mining
55 West North Temple, 3 Triad Center, Suite 350, Salt Lake City, Ut 4180-1203. (801-538-5340)

NOV 1992 RECEIVED ROCKY MTN REGION



# MONTHLY OIL AND GAS PRODUCTION REPORT

Operator name and address:

JOANN SMITH
APC OPERATING PARTNERSHIP
1700 LINCOLN STE 2000
DENVER CO 80203-4520

RECEIVED
NOV 30 1992
DIVISION OF OIL GAS & MINING

Utah Account No. N7180

Report Period (Month/Year) 10 / 92

Amended Report ☐

| Well Name / API Number Entity Location | Producing Zone | Days Oper | Oil (BBL) | Gas (MSCF) | Water (BBL) |
|---|---|---|---|---|---|
| LOGAN FED #1 / 4304330186 02775 03N 07E 26 | NGSD | — | U-47812 | | |
| LOGAN FED #2-A / 4304330223 02775 03N 07E 26 | NGSD | — | U-47812 | | |
| TOTAL | | | | | |

N7180 - sent blank turnaround for 10-92 AFC

LISHA 12-1-92

VICKY

#921203 APC - Sending Sundries ASAP. Also referred to BLM.
#921207 Forcenergy - Sundries Req.

Comments (attach separate sheet if necessary)

These wells have been sold to: Forcenergy Center
2730 SW 3rd Ave, #800
Miami, Florida 33129-2237
Attn: Julio Leon
#921215 Faxing "Forcenergy" (305) 856-8500

I have reviewed this report and certify the information to be accurate and complete. Date 11-25-92

Authorized signature [signature]

Telephone (303) 837-5438

PLEASE COMPLETE FORMS IN BLACK INK

Forcenergy

# FORCENERGY GAS EXPLORATION, INC.

2730 SW 3RD AVENUE -- SUITE 800
MIAMI, FLORIDA 33129-2237
(305) 856-8500 -- 856-4300 FAX

## FAX COVER SHEET

DATE:

TO: Lisha Romero

FROM: Julio Leon

PAGES TO FOLLOW: 2

MESSAGE:

FAX (801) 359-3940

AS PER REQUEST

* Logan Fed. #1
43-043-30186

K:\ACCT\DIANE\FORCE\FORMS\FAX 10/12/92

BUREAU OF LAND MANAGEMENT

**SUNDRY NOTICES AND REPORTS ON WELLS**

Do not use this form for proposals to drill or to deepen or reentry to a different reservoir. Use "APPLICATION FOR PERMIT—" for such proposals

SUBMIT IN TRIPLICATE

Type of Well: Oil Well [X] Gas Well [X] Other

Name of Operator: Forcenergy Gas Exploration, Inc.

Address and Telephone No.: 2700 NW 3rd Avenue, #800, Miami, Florida 33129 (305) 856-8500

Location of Well (Footage, Sec., T., R., M., or Survey Description): 1980' FNL, 1690' FEL, SW 1/4 NE 1/4 Section 26-T3N, R7E

UTU-47812

6. If Indian, Allottee or Tribe Name

7. If Unit or CA, Agreement Designation

8. Well Name and No.: Logan Federal #1

9. API Well No.: 43-043-30186

10. Field and Pool, or Exploratory Area: Pineview, North

11. County or Parish, State: Summit, Utah

CHECK APPROPRIATE BOX(s) TO INDICATE NATURE OF NOTICE, REPORT, OR OTHER DATA

| TYPE OF SUBMISSION | TYPE OF ACTION | |
|---|---|---|
| [X] Notice of Intent | [ ] Abandonment | [ ] Change of Plans |
| [ ] Subsequent Report | [ ] Recompletion | [ ] New Construction |
| [ ] Final Abandonment Notice | [ ] Plugging Back | [ ] Non-Routine Fracturing |
| | [ ] Casing Repair | [ ] Water Shut-Off |
| | [ ] Altering Casing | [ ] Conversion to Injection |
| | [X] Other Change of Operator | [ ] Dispose Water |
| | | (Note: Report results of multiple completion on Well Completion or Recompletion Report and Log form.) |

"Describe Proposed or Completed Operations (Clearly state all pertinent details, and give pertinent dates, including estimated date of starting any proposed work. If well is directionally drilled, give subsurface locations and measured and true vertical depths for all markers and zones pertinent to this work.)"

Please be advised, effective September 3, 1992, Forcenergy Gas Exploration, Inc. is considered to be Operator of the captioned well. Forcenergy Gas Exploration, Inc. will be responsible for its operations conducted under the terms of Lease UTU-47812.

I hereby certify that the foregoing is true and correct

Signed _____ Title Stig Wennerstrom, President Forcenergy Gas Exploration, Inc. Date 9/2/92

(This space for Federal or State office use)

Approved by _____ Title _____ Date _____

Conditions of approval, if any:

Title 18 U.S.C. Section 1001, makes it a crime for any person knowingly and willfully to make to any department or agency of the United States any false, fictitious or fraudulent statements or representations as to any matter within its jurisdiction.

*See Instruction on Reverse Side

Division of Oil, Gas and Mining
# PHONE CONVERSATION DOCUMENTATION FORM

Route original/copy to:
[X] Well File
Logan Fed. #1
(Location) Sec___ Twp___ Rng___
(API No.) 43-043-30186

[] Suspense
(Return Date) _____
(To - Initials) _____

[X] Other
Operator change

1. Date of Phone Call: 7-8-93 Time: 10:30

2. DOGM Employee (name) L. Cordova (Initiated Call [X])
Talked to:
Name Teresa (Initiated Call [ ]) - Phone No. (801) 539-4047
of (Company/Organization) BLM/S.L.

3. Topic of Conversation: U-47812 "Logan 1 & Logan 2-A" wells.

4. Highlights of Conversation:
Operator still Apache "APC". They have not received info. from Forcenergy Gas (self certification & bond req.). Forcenergy Gas has requested permission to PA, has not been approved.

JoAnn - APC Operating (303) 837-5438 notified.

* 930727 BLM/S.L. Approvals found - were misplaced. Approved 7-21-93 eff. 10-30-92. * Copies being mailed. (Rec'd 7-28-93)

United States Department of the Interior

BUREAU OF LAND MANAGEMENT
Salt Lake District Office
2370 South 2300 West
Salt Lake City, Utah 84119

TAKE PRIDE IN AMERICA

IN REPLY REFER TO:

3160
O&G 1005
O&G 2005
U-47812
(U-026)

RECEIVED
JUL 28 1993
DIVISION OF
OIL, GAS & MINING

JUL 21 1993

Stig Wennerstrom
Forcenergy Gas Exploration, Inc.
2730 SW 3rd Avenue, #800
Miami, Florida 33129

Dear Mr. Wennerstrom:

Enclosed are your copies of the approved Sundry Notices for a "Change of Operator" effective October 30, 1992 for Logan Federal #1, T3N, R7E, Sec. 26 SENE and Logan Federal #2-A, T3N, R7E, Sec. 26 NWSE wells Summit County, Utah. Our review of these notices found them to be administratively and technically adequate. Therefore, approval is granted.

If you have any questions concerning this matter, please feel free to contact Dan Washington of my staff at (801) 977-4300.

Sincerely,

Acting For Deane H. Zeller
District Manager

Enclosure
Sundry Notice (2)

Form 3160-5
(June 1990)

UNITED STATES
DEPARTMENT OF THE INTERIOR
BUREAU OF LAND MANAGEMENT

FORM APPROVED
Budget Bureau No. 1004-0135
Expires: March 31, 1993

5. Lease Designation and Serial No.
UTU-47812

6. If Indian, Allottee or Tribe Name

7. If Unit or CA, Agreement Designation

## SUNDRY NOTICES AND REPORTS ON WELLS

Do not use this form for proposals to drill or to deepen or reentry to a different reservoir. Use "APPLICATION FOR PERMIT—" for such proposals

*SUBMIT IN TRIPLICATE*

1. Type of Well
[X] Oil Well [X] Gas Well [ ] Other

8. Well Name and No.
Logan Federal #1

2. Name of Operator
Forcenergy Gas Exploration, Inc.

9. API Well No.
43-043-30186

3. Address and Telephone No.
2730 SW 3rd Avenue, #800, Miami, Florida 33129 (305) 856-8500

10. Field and Pool, or Exploratory Area
Pineview, North

4. Location of Well (Footage, Sec., T., R., M., or Survey Description)
1658' FNL, 690' FEL
SE 1/4 NE 1/4 Section 26-T3N, R7E

11. County or Parish, State
Summit, Utah

12. CHECK APPROPRIATE BOX(s) TO INDICATE NATURE OF NOTICE, REPORT, OR OTHER DATA

| TYPE OF SUBMISSION | TYPE OF ACTION | |
|---|---|---|
| [X] Notice of Intent | [ ] Abandonment | [ ] Change of Plans |
| | [ ] Recompletion | [ ] New Construction |
| [ ] Subsequent Report | [ ] Plugging Back | [ ] Non-Routine Fracturing |
| | [ ] Casing Repair | [ ] Water Shut-Off |
| [ ] Final Abandonment Notice | [ ] Altering Casing | [ ] Conversion to Injection |
| | [X] Other Change of Operator | [ ] Dispose Water (Note: Report results of multiple completion on Well Completion or Recompletion Report and Log form.) |

13. Describe Proposed or Completed Operations (Clearly state all pertinent details, and give pertinent dates, including estimated date of starting any proposed work. If well is directionally drilled, give subsurface locations and measured and true vertical depths for all markers and zones pertinent to this work.)*

Please be advised, effective September 3, 1992, Forcenergy Gas Exploration, Inc. is considered to be Operator of the captioned well. Forcenergy Gas Exploration, Inc. will be responsible for its operations conducted under the terms of Lease UTU-47812.

RECEIVED
JUL 28 1993
DIVISION OF
OIL, GAS & MINING

14. I hereby certify that the foregoing is true and correct

Signed [signature] Title Stig Wennerstrom, President Forcenergy Gas Exploration, Inc Date 9/2/92

(This space for Federal or State office use)

Approved by [signature] Title Acting DM Date 7/21/93

Conditions of Approval, if any:

Title 18 U.S.C. Section 1001, makes it a crime for any person knowingly and willfully to make to any department or agency of the United States any false, fictitious or fraudulent statements or representations as to any matter within its jurisdiction.

*See Instruction on Reverse Side

RICHARDSON OPERATING COMPANY

309 West First Avenue P.O. Box 9808
Denver, Colorado 80209 (303) 698-9000
FAX (303) 777-0607

RECEIVED
JUL 29 1993
DIVISION OF
OIL, GAS & MINING

July 27, 1993

Department of Natural Resources
Division of Oil, Gas & Mining
3 Triad Center, Suite 350
Salt Lake City, UT 84180-1203

Re: Transmittal of Sundry Notices
Change of Operator

Gentlemen:

Enclosed are two Sundry Notices, in duplicate, covering notice of change of operator to Richardson Operating Company, on the following wells:

Logan Federal #1
Township 3 North, Range 7 East
Section 26: SE/4NE/4
Summit County, UT

Logan Federal #2A
Township 3 North, Range 7 East
Section 26: NW/4SE/4
Summit County, UT

The Bureau of Land Management is holding our surety lease bond.

Please let me know if you need anything further in this regard.

Sincerely,

RICHARDSON OPERATING COMPANY

Cathleen Colby

Cathleen Colby
Landman

Form 9

STATE OF UTAH
DEPARTMENT OF NATURAL RESOURCES
DIVISION OF OIL, GAS AND MINING

6. Lease Designation and Serial Number: UTU-47812

7. Indian Allottee or Tribe Name: ---

8. Unit or Communitization Agreement: ---

# SUNDRY NOTICES AND REPORTS ON WELLS

Do not use this form for proposals to drill new wells, deepen existing wells, or to reenter plugged and abandoned wells.
Use APPLICATION FOR PERMIT— for such proposals

1. Type of Well: ☐ Oil Well ☒ Gas Well ☐ Other (specify)

9. Well Name and Number: Logan Federal #1

2. Name of Operator: Richardson Operating Company

10. API Well Number: 43-043-30186

3. Address of Operator: P.O. Box 9808, Denver, CO 80209

4. Telephone Number: (303) 698-9000

11. Field and Pool, or Wildcat: North Pineview

5. Location of Well
Footage : 1658' FNL, 690' FEL
QQ, Sec, T., R., M. : SE/4NE/4-Section 26-T3N-R7E
County : Summit
State : UTAH

12. CHECK APPROPRIATE BOXES TO INDICATE NATURE OF NOTICE, REPORT, OR OTHER DATA

**NOTICE OF INTENT** (Submit in Duplicate)

- ☐ Abandonment
- ☐ Casing Repair
- ☐ Change of Plans
- ☐ Conversion to Injection
- ☐ Fracture Treat
- ☐ Multiple Completion
- ☐ New Construction
- ☐ Pull or Alter Casing
- ☐ Recompletion
- ☐ Shoot or Acidize
- ☐ Vent or Flare
- ☐ Water Shut-Off
- ☒ Other Transfer of operations

Approximate Date Work Will Start _____

**SUBSEQUENT REPORT** (Submit Original Form Only)

- ☐ Abandonment *
- ☐ Casing Repair
- ☐ Change of Plans
- ☐ Conversion to Injection
- ☐ Fracture Treat
- ☐ Other _____
- ☐ New Construction
- ☐ Pull or Alter Casing
- ☐ Shoot or Acidize
- ☐ Vent or Flare
- ☐ Water Shut-Off

Date of Work Completion _____

Report results of Multiple Completions and Recompletions to different reservoirs on WELL COMPLETION OR RECOMPLETION AND LOG form.

* Must be accompanied by a cement verification report.

13. DESCRIBE PROPOSED OR COMPLETED OPERATIONS (Clearly state all pertinent details, and give pertinent dates. If well is directionally drilled, give subsurface locations and measured and true vertical depths for all markers and zones pertinent to this work.)

Notice of change of operator.
Effective August 1, 1993, seventy-five percent of the working interest elected Richardson Operating Company as operator of the above well. Richardson Operating Company is providing bond coverage under BLM Lease Bond, Surety Bond Number 123972095.

RECEIVED
JUL 29 1993
DIVISION OF
OIL, GAS & MINING

14. I hereby certify that the foregoing is true and correct

Name & Signature: RICHARDSON OPERATING COMPANY David B. Richardson Title: President Date: 7-26-93

(State Use Only)

(8/90) See Instructions on Reverse Side

RECEIVED
JUL 30 1993
BUREAU OF LAND MANAGEMENT
2370 SOUTH 2300 WEST
SALT LAKE CITY, UTAH 84119

Form 3160-5
(June 1990)

UNITED STATES
DEPARTMENT OF THE INTERIOR
BUREAU OF LAND MANAGEMENT

FORM APPROVED
Budget Bureau No. 1004-0135
Expires: March 31, 1993

## SUNDRY NOTICES AND REPORTS ON WELLS

Do not use this form for proposals to drill or to deepen or reentry to a different reservoir.
Use "APPLICATION FOR PERMIT—" for such proposals

5. Lease Designation and Serial No.
UTU-47812

6. If Indian, Allottee or Tribe Name

*SUBMIT IN TRIPLICATE*

7. If Unit or CA, Agreement Designation
---

1. Type of Well
☐ Oil Well ☒ Gas Well ☐ Other

8. Well Name and No.
Logan Federal #1

2. Name of Operator
Richardson Operating Company

9. API Well No.
43-043-30186

3. Address and Telephone No.
P.O. Box 9808, Denver, CO 80209 (303) 698-9000

10. Field and Pool, or Exploratory Area
North Pineview

4. Location of Well (Footage, Sec., T., R., M., or Survey Description)
1658' FNL, 690' FEL
SE/4NE/4-Section 26-T3N-R7E

11. County or Parish, State
Summit County, UT

12. CHECK APPROPRIATE BOX(s) TO INDICATE NATURE OF NOTICE, REPORT, OR OTHER DATA

| TYPE OF SUBMISSION | TYPE OF ACTION | |
|---|---|---|
| ☒ Notice of Intent | ☐ Abandonment | ☐ Change of Plans |
| ☐ Subsequent Report | ☐ Recompletion | ☐ New Construction |
| ☐ Final Abandonment Notice | ☐ Plugging Back | ☐ Non-Routine Fracturing |
| | ☐ Casing Repair | ☐ Water Shut-Off |
| | ☐ Altering Casing | ☐ Conversion to Injection |
| | ☒ Other Transfer of operations | ☐ Dispose Water (Note: Report results of multiple completion on Well Completion or Recompletion Report and Log form.) |

13. Describe Proposed or Completed Operations (Clearly state all pertinent details, and give pertinent dates, including estimated date of starting any proposed work. If well is directionally drilled, give subsurface locations and measured and true vertical depths for all markers and zones pertinent to this work.)*

Notice of change of operator.
Effective August 1, 1993, seventy-five percent of the working interest elected Richardson Operating Company as operator of the above well. Richardson Operating Company does hereby certify that it is responsible under the terms and conditions of the lease to conduct lease operations. Bond coverage pursuant to 43 CFR 3104 for lease activities is being provided by Richardson Operating Company under BLM bond number UT0954

14. I hereby certify that the foregoing is true and correct
Signed RICHARDSON OPERATING COMPANY David Richardson Title President Date July 23, 1993

(This space for Federal or State office use)
Approved by Deane H. Zeller Title District Manager Date Aug. 9, 1993
Conditions of approval, if any:

Title 18 U.S.C. Section 1001, makes it a crime for any person knowingly and willfully to make to any department or agency of the United States any false, fictitious or fraudulent statements or representations as to any matter within its jurisdiction.

*See Instruction on Reverse Side

Division of Oil, Gas and Mining
OPERATOR CHANGE WORKSHEET

Routing:

| | |
|---|---|
| 1-LCR | 7-LCR |
| 2-DTS | |
| 3-VLC | |
| 4-RJF | |
| 5-PL | |
| 6-SJ | |

Attach all documentation received by the division regarding this change.
Initial each listed item when completed. Write N/A if item is not applicable.

☒ Change of Operator (well sold) ☐ Designation of Agent
☐ Designation of Operator ☐ Operator Name Change Only

The operator of the well(s) listed below has changed (EFFECTIVE DATE: 9-03-92)

TO (new operator) FORCENERGY GAS EXPLOR INC
(address) 2730 S W 3RD AVE #800
MIAMI, FL 33129
phone (305) 856-8500
account no. N 3175

FROM (former operator) APC OPERATING PARTNERSHIP
(address) 1700 LINCOLN STE 2000
DENVER, CO 80203-4520
phone (303) 837-5438
account no. N 7180

Well(s) (attach additional page if needed):

| Name | API | Entity | Sec | Twp | Rng | Lease Type |
|---|---|---|---|---|---|---|
| LOGAN FED 1/NGSD | 43-043-30186 | 2775 | 26 | 3N | 7E | U-47812 |
| LOGAN FED 2-A/NGSD | 43-043-30223 | 2775 | 26 | 3N | 7E | U-47812 |
| | | | | | | |
| | | | | | | |
| | | | | | | |
| | | | | | | |
| | | | | | | |

OPERATOR CHANGE DOCUMENTATION

N/A 1. (Rule R615-8-10) Sundry or other legal documentation has been received from former operator (Attach to this form). (Reg. 12-3-92) (Reg. 1-4-93) (Reg. 2-2-93) (Reg. 4-5-93) (Reg. 7-8-93)

Lec 2. (Rule R615-8-10) Sundry or other legal documentation has been received from new operator (Attach to this form). (Rec'd 12-15-92)

N/A 3. The Department of Commerce has been contacted if the new operator above is not currently operating any wells in Utah. Is company registered with the state? (yes/no) _____ If yes, show company file number: _____.

Lec 4. (For Indian and Federal Wells ONLY) The BLM has been contacted regarding this change (attach Telephone Documentation Form to this report). Make note of BLM status in comments section of this form. Management review of Federal and Indian well operator changes should take place prior to completion of steps 5 through 9 below.

Lec 5. Changes have been entered in the Oil and Gas Information System (Wang/IBM) for each well listed above. (7-28-93)

Lec 6. Cardex file has been updated for each well listed above. (7-28-93)

Lec 7. Well file labels have been updated for each well listed above. (7-28-93)

Lec 8. Changes have been included on the monthly "Operator, Address, and Account Changes" memo for distribution to State Lands and the Tax Commission. (7-28-93)

Lec 9. A folder has been set up for the Operator Change file, and a copy of this page has been placed there for reference during routing and processing of the original documents.

ERATOR CHANGE WORKSHEET (CONTINUED) Initial each item when completed. Write N/A if item is not applicable.

ITITY REVIEW

1. (Rule R615-8-7) Entity assignments have been reviewed for all wells listed above. Were entity changes made? (yes/no) ____ (If entity assignments were changed, attach copies of Form 6, Entity Action Form).

N/A 2. State Lands and the Tax Commission have been notified through normal procedures of entity changes.

ND VERIFICATION (Fee wells only)

N/A 1. (Rule R615-3-1) The new operator of any fee lease well listed above has furnished a proper bond.

N/A 2. A copy of this form has been placed in the new and former operators' bond files.

N/A 3. The former operator has requested a release of liability from their bond (yes/no) ___. Today's date _____ 19___. If yes, division response was made by letter dated _____ 19___.

EASE INTEREST OWNER NOTIFICATION RESPONSIBILITY

N/A 1. (Rule R615-2-10) The former operator/lessee of any fee lease well listed above has been notified by letter dated _____ 19___, of their responsibility to notify any person with an interest in such lease of the change of operator. Documentation of such notification has been requested.

N/A 2. Copies of documents have been sent to State Lands for changes involving State leases.

ILMING

1. All attachments to this form have been microfilmed. Date: August 3 19 93.

ILING

1. Copies of all attachments to this form have been filed in each well file.

2. The original of this form and the original attachments have been filed in the Operator Change file.

OMMENTS

930728 Unable to get doc. from APC Operating. (see Bhm approvals)

E71/34-35

# Forcenergy

Gas Exploration, Inc.

October 14, 1993

RECEIVED
OCT 18 1993
DIVISION OF
OIL, GAS & MINING

State of Utah
Department of Natural Resources
355 West North Temple
3 Triad Center, Suite 350
Salt Lake City, UT 84180-1203

Attention: Lisha Cordova

**RE: Logan Federal #1 & #2A**
**N. Pineview Field, Utah**

Dear Ms. Cordova:

As per your request in your September 29, 1993 fax, enclosed please find three original sundry notices for each of the referenced wells.

This submittal is for the purpose of changing operator effective August 1, 1993 to Richardson Operating Company.

Should you require any additional information, please advise.

Sincerely,

FORCENERGY GAS EXPLORATION, INC.

M. J. Baiamonte
Land Manager

D184/MJB/yc


HEADQUARTERS
Forcenergy Center
2730 SW 3rd Avenue
Suite 800
Miami, Florida 33129-2237

TELEPHONE
305/856-8500
FAX
305/856-4300

REGIONAL OFFICE
Lakeway Three
3838 North Causeway Boulevard
Suite 2060
Metairie, Louisiana 70002

TELEPHONE
504/838-7022
FAX
504/838-7017

Form 9

STATE OF UTAH

DIVISION OF OIL, GAS AND MINING

UTU - 47812

7. Indian Allottee or Tribe Name

# SUNDRY NOTICES AND REPORTS ON WELLS

Do not use this form for proposals to drill new wells, deepen existing wells, or to reenter plugged and abandoned wells.
Use APPLICATION FOR PERMIT — for such proposals

8. Unit or Communitization Agreement

1. Type of Well
☒ Oil Well ☐ Gas Well ☐ Other (specify)

9. Well Name and Number
LOGAN FEDERAL #1

2. Name of Operator
RICHARDSON OPERATING COMPANY

10. API Well Number
43-043-30186

3. Address of Operator
1700 LINCOLN, #1700, DENVER, COLORADO 80203

4. Telephone Number
(303) 830-8000

11. Field and Pool, or Wildcat
PINEVIEW, NORTH

5. Location of Well
Footage : 1658' FNL, 690' FEL
QQ, Sec, T., R., M. : SE/4 NE/4 SEC 26 T3N-R7E
County : SUMMIT
State : UTAH UT

12. CHECK APPROPRIATE BOXES TO INDICATE NATURE OF NOTICE, REPORT, OR OTHER DATA

| NOTICE OF INTENT (Submit in Duplicate) | | SUBSEQUENT REPORT (Submit Original Form Only) | |
|---|---|---|---|
| ☐ Abandonment | ☐ New Construction | ☐ Abandonment * | ☐ New Construction |
| ☐ Casing Repair | ☐ Pull or Alter Casing | ☐ Casing Repair | ☐ Pull or Alter Casing |
| ☐ Change of Plans | ☐ Recompletion | ☐ Change of Plans | ☐ Shoot or Acidize |
| ☐ Conversion to Injection | ☐ Shoot or Acidize | ☐ Conversion to Injection | ☐ Vent or Flare |
| ☐ Fracture Treat | ☐ Vent or Flare | ☐ Fracture Treat | ☐ Water Shut-Off |
| ☐ Multiple Completion | ☐ Water Shut-Off | ☐ Other | |
| ☒ Other Change of Operator | | | |
| Approximate Date Work Will Start | | Date of Work Completion | |

Report results of Multiple Completions and Recompletions to different reservoirs on WELL COMPLETION OR RECOMPLETION AND LOG form.

* Must be accompanied by a cement verification report.

13. DESCRIBE PROPOSED OR COMPLETED OPERATIONS (Clearly state all pertinent details, and give pertinent dates. If well is directionally drilled, give subsurface locations and measured and true vertical depths for all markers and zones pertinent to this work.)

Be advised, effective August 1, 1993, Richardson Operating Company took over operations of the above subject well from Forcenergy Gas Exploration, Inc.

RECEIVED
OCT 18 1993
DIVISION OF
OIL, GAS & MINING

14. I hereby certify that the foregoing is true and correct

Name & Signature FORCENERGY GAS EXPLORATION, INC. Title PRESIDENT Date 10/8-93

(State Use Only) STIG WENNERSTROM

Division of Oil, Gas and Mining
# OPERATOR CHANGE WORKSHEET

Routing:
1-LEC 7-SJ
2-DTS 8-FILE
3-VLC
4-RJF
5-LEC
6-PL

Attach all documentation received by the division regarding this change.
Initial each listed item when completed. Write N/A if item is not applicable.

XXX Change of Operator (well sold) ☐ Designation of Agent
☐ Designation of Operator ☐ Operator Name Change Only

The operator of the well(s) listed below has changed (EFFECTIVE DATE: 8-01-93)

TO (new operator) RICHARDSON OPERATING CO
(address) PO BOX 9808
DENVER, CO 80209
DAVID RICHARDSON, PRES.
phone ( 303 ) 698-9000
account no. N 2400

FROM (former operator) FORCENERGY GAS EXPLOR INC
(address) 2730 S W 3RD AVE #800
MIAMI, FL 33129
phone ( 305 ) 856-8500
account no. N 3175

Well(s) (attach additional page if needed):

| Name | API | Entity | Sec | Twp | Rng | Lease Type |
|---|---|---|---|---|---|---|
| LOGAN FED 1/NGSD X | 43-043-30186 | 2775 | 26 | 3N | 7E | U-47812 |
| LOGAN FED 2-A/NGSD | 43-043-30223 | 2775 | 26 | 3N | 7E | U-47812 |
| | | | | | | |
| | | | | | | |
| | | | | | | |
| | | | | | | |
| | | | | | | |

OPERATOR CHANGE DOCUMENTATION

✗ 1. (Rule R615-8-10) Sundry or other legal documentation has been received from former operator (Attach to this form). (Rec. 7-29-93) (Rec. 8-30-93) (Rec. 9-29-93) (Rec'd 10-18-93)

Lec 2. (Rule R615-8-10) Sundry or other legal documentation has been received from new operator (Attach to this form). (Rec'd 7-29-93)

N/A 3. The Department of Commerce has been contacted if the new operator above is not currently operating any wells in Utah. Is company registered with the state? (yes/no) _____ If yes, show company file number: _____.

Lec 4. **(For Indian and Federal Wells ONLY)** The BLM has been contacted regarding this change (attach Telephone Documentation Form to this report). Make note of BLM status in comments section of this form. Management review of **Federal and Indian** well operator changes should take place prior to completion of steps 5 through 9 below.

Lec 5. Changes have been entered in the Oil and Gas Information System (Wang/IBM) for each well listed above. (9-29-93)

Lec 6. Cardex file has been updated for each well listed above. (9-29-93)

Lec 7. Well file labels have been updated for each well listed above. (9-29-93)

Lec 8. Changes have been included on the monthly "Operator, Address, and Account Changes" memo for distribution to State Lands and the Tax Commission. (9-29-93)

Lec 9. A folder has been set up for the Operator Change file, and a copy of this page has been placed there for reference during routing and processing of the original documents.

– OVER –

OPERATOR CHANGE WORKSHEET (CONTINUED) Initial each item when completed. Write N/A if item is not applicable.

## ENTITY REVIEW

Lec 1. (Rule R615-8-7) Entity assignments have been reviewed for all wells listed above. Were entity changes made? (yes/no) ____ (If entity assignments were changed, attach copies of Form 6, Entity Action Form).

N/A 2. State Lands and the Tax Commission have been notified through normal procedures of entity changes.

## BOND VERIFICATION (Fee wells only)

N/A 1. (Rule R615-3-1) The new operator of any fee lease well listed above has furnished a proper bond.

N/A 2. A copy of this form has been placed in the new and former operators' bond files.

N/A 3. The former operator has requested a release of liability from their bond (yes/no) ___. Today's date _____ 19___. If yes, division response was made by letter dated _____ 19___.
Lec

## LEASE INTEREST OWNER NOTIFICATION RESPONSIBILITY

N/A 1. (Rule R615-2-10) The former operator/lessee of any **fee lease** well listed above has been notified by letter dated _____ 19___, of their responsibility to notify any person with an interest in such lease of the change of operator. Documentation of such notification has been requested.
DTS 10/20/93

N/A 2. Copies of documents have been sent to State Lands for changes involving **State leases**.

## FILMING

✓ 1. All attachments to this form have been microfilmed. Date: 10-21 1993.

## FILING

Lec 1. Copies of all attachments to this form have been filed in each well file.

Lec 2. The original of this form and the original attachments have been filed in the Operator Change file.

## COMMENTS

930929 BLM/S.L. Approved 8-9-93. (Unable to get doc. fr. Forcenergy)

931019 Rec'd doc. from Forcenergy.

IE71/34-35

JN Exploration & Production

550 N. 31st Street, Suite 300
P.O. Box 7167
Billings, Montana 59103-7167
(406) 248-2222
FAX (406) 248-5253

September 6, 1995

Utah Division of Oil, Gas & Mining
3 Triad Center, Suite 350
Salt Lake City, Utah 84180-1203

Re: Change of Operator

| | | |
|---|---|---|
| Logan Fed #1 Well | Logan Fed #2A SWD Well | Champlin 846 B-1 |
| SE/NE Sec. 26, T3N-R7E | NW/SE Sec. 26, T3N-R7E | NW/NE Sec. 25, T5N-R7E |
| Summit Co., Utah | Summit Co., Utah | Summit Co., Utah |

Gentlemen:

Included with this letter please find the required copies of the change of operator forms for the above referenced wells. Also included are the required copies of the UIC Form 5, Transfer of Authority to Inject for the Logan Federal #2A well.

If you have questions concerning these forms, please contact me at our Billings, Montana office.

Sincerely,

RECEIVED
SEP 11 1995
DIV. OF OIL, GAS & MINING

W.M. Belden
W. M. Belden
Senior Engineer
JN Exploration & Production

\ss

orm 9

STATE OF UTAH
DEPARTMENT OF NATURAL RESOURCES
DIVISION OF OIL, GAS AND MINING

6. Lease Designation and Serial Number: UTU-47812

7. Indian Allottee or Tribe Name: –

# SUNDRY NOTICES AND REPORTS ON WELLS

Do not use this form for proposals to drill new wells, deepen existing wells, or to reenter plugged and abandoned wells.
Use APPLICATION FOR PERMIT — for such proposals.

8. Unit or Communitization Agreement: –

. Type of Well: ☐ Oil Well ☒ Gas Well ☐ Other (specify)

9. Well Name and Number: Logan Federal #1

. Name of Operator: JN Exploration & Production Limited Partnership

10. API Well Number: 43-043-30186

. Address of Operator: 550 N. 31st Street, Suite 300, Billings, MT 59101

4. Telephone Number: (406) 248-2222

11. Field and Pool, or Wildcat: North Pineview

. Location of Well

Footage : 1658' FNL and 690' FEL — County : Summit

QQ, Sec, T., R., M. : SE/4NE/4-Sec 26-T3N-R7E — State : UTAH

2. CHECK APPROPRIATE BOXES TO INDICATE NATURE OF NOTICE, REPORT, OR OTHER DATA

**NOTICE OF INTENT** (Submit in Duplicate)

- ☐ Abandonment
- ☐ Casing Repair
- ☐ Change of Plans
- ☐ Conversion to Injection
- ☐ Fracture Treat
- ☐ Multiple Completion
- ☒ Other Transfer of operations
- ☐ New Construction
- ☐ Pull or Alter Casing
- ☐ Recompletion
- ☐ Shoot or Acidize
- ☐ Vent or Flare
- ☐ Water Shut-Off

Approximate Date Work Will Start _____

**SUBSEQUENT REPORT** (Submit Original Form Only)

- ☐ Abandonment *
- ☐ Casing Repair
- ☐ Change of Plans
- ☐ Conversion to Injection
- ☐ Fracture Treat
- ☐ Other _____
- ☐ New Construction
- ☐ Pull or Alter Casing
- ☐ Shoot or Acidize
- ☐ Vent or Flare
- ☐ Water Shut-Off

Date of Work Completion _____

Report results of Multiple Completions and Recompletions to different reservoirs on WELL COMPLETION OR RECOMPLETION AND LOG form.

* Must be accompanied by a cement verification report.

3. DESCRIBE PROPOSED OR COMPLETED OPERATIONS (Clearly state all pertinent details, and give pertinent dates. If well is directionally drilled, give subsurface locations and measured and true vertical depths for all markers and zones pertinent to this work.)

Notice of change of operator.
Effective September 1, 1995, 100% of the working interest elected JN Exploration & Production Limited Partnership as operator of the above well. JN Exploration & Production Limited Partnership is providing bond coverage under BLM Bond No. WY-2395, Surety No. 5089867.

RECEIVED
SEP 11 1995
DIV. OF OIL, GAS & MINING

Richardson Operating Company
David B. Richardson, President

4. I hereby certify that the foregoing is true and correct
JN Exploration & Production Limited Partnership, by JN Oil and Gas, Inc., its General Partner

Name & Signature _____ Title President Date 8-31-95

State Use Only)

Division of Oil, Gas and Mining
**OPERATOR CHANGE WORKSHEET**

Routing: (GIL)

| | |
|---|---|
| 1 | LRC 7-PL |
| 2 | LWP 8-SJ |
| 3 | DTS 9-FILE |
| 4 | VLD |
| 5 | RJF |
| 6 | LWP |

Attach all documentation received by the division regarding this change.
Initial each listed item when completed. Write N/A if item is not applicable.

☒ Change of Operator (well sold) ☐ Designation of Agent
☐ Designation of Operator ☐ Operator Name Change Only

The operator of the well(s) listed below has changed (EFFECTIVE DATE: 9-1-95)

TO (new operator) JN EXPLORATION & PROD.
(address) 550 N 31ST ST STE 300
BILLINGS MT 59101

phone (406) 248-2222
account no. N 2955 (9-28-95)

FROM (former operator) RICHARDSON OPERATING CO
(address) 1700 LINCOLN ST STE 1700
DENVER CO 80202

phone (303) 830-8000
account no. N2400

Well(s) (attach additional page if needed): *WDW

| | | | | | | | | | |
|---|---|---|---|---|---|---|---|---|---|
| Name: LOGAN FEDERAL 1/NGSD | API: 43-043-30186 | Entity: 2775 | Sec 26 | Twp 3N | Rng 7E | Lease Type: U47812 |
| Name: *LOGAN FEDERAL 2-A/NGSD | API: 43-043-30223 | Entity: 2775 | Sec 26 | Twp 3N | Rng 7E | Lease Type: U47812 |
| Name: CHAMPLIN 846 B-1/TWNCR | API: 43-043-30253 | Entity: 9795 | Sec 25 | Twp 5N | Rng 7E | Lease Type: FEE |
| Name: | API: | Entity: | Sec | Twp | Rng | Lease Type: |
| Name: | API: | Entity: | Sec | Twp | Rng | Lease Type: |
| Name: | API: | Entity: | Sec | Twp | Rng | Lease Type: |
| Name: | API: | Entity: | Sec | Twp | Rng | Lease Type: |

**OPERATOR CHANGE DOCUMENTATION**

Lec 1. (Rule R615-8-10) Sundry or other legal documentation has been received from former operator (Attach to this form). (Rec'd 9-11-95)

Lec 2. (Rule R615-8-10) Sundry or other legal documentation has been received from new operator (Attach to this form). (Rec'd 9-11-95)

Lec 3. The Department of Commerce has been contacted if the new operator above is not currently operating any wells in Utah. Is company registered with the state? (yes/no) _____ If yes, show company file number: #dba 096211. (eff. 3-2-89)

Lec 4. **(For Indian and Federal Wells ONLY)** The BLM has been contacted regarding this change (attach Telephone Documentation Form to this report). Make note of BLM status in comments section of this form. Management review of **Federal and Indian** well operator changes should take place prior to completion of steps 5 through 9 below.

Lec 5. Changes have been entered in the Oil and Gas Information System (Wang/IBM) for each well listed above. (9-28-95)

LWP 6. Cardex file has been updated for each well listed above. 10-3-95

LWP 7. Well file labels have been updated for each well listed above 10-3-95

Lec 8. Changes have been included on the monthly "Operator, Address, and Account Changes" memo for distribution to State Lands and the Tax Commission. (9-28-95)

Lec 9. A folder has been set up for the Operator Change file, and a copy of this page has been placed there for reference during routing and processing of the original documents.

– OVER –

**OPERATOR CHANGE WORKSHEET (CONTINUED)** Initial each item when completed. Write N/A if item is not applicable.

---

**ENTITY REVIEW**

LEC 1. (Rule R615-8-7) Entity assignments have been reviewed for all wells listed above. Were entity changes made? (yes/no) ____ (If entity assignments were changed, attach copies of Form 6, Entity Action Form).

N/A 2. State Lands and the Tax Commission have been notified through normal procedures of entity changes.

---

**BOND VERIFICATION (Fee wells only)** Surety Bond No. 5845430/80,000 "Safeco Ins. Co. of America"

LEC 1. (Rule R615-3-1) The new operator of any fee lease well listed above has furnished a proper bond.

___ 2. A copy of this form has been placed in the new and former operator's' bond files. * Upon compl. of routing.

LEC 3. The former operator has requested a release of liability from their bond (yes/no) ___. Today's date _____ 19___. If yes, division response was made by letter dated _____ 19___.

---

**LEASE INTEREST OWNER NOTIFICATION RESPONSIBILITY**

N/A 1. (Rule R615-2-10) The former operator/lessee of any **fee lease** well listed above has been notified by letter dated _____ 19___, of their responsibility to notify any person with an interest in such lease of the change of operator. Documentation of such notification has been requested. This is no longer being done at directive of RJF. DTS

OTS 10/4/95

N/A 2. Copies of documents have been sent to State Lands for changes involving **State leases**.

---

**FILMING**

✓ 1. All attachments to this form have been microfilmed. Date: October 20 19 95.

---

**FILING**

___ 1. Copies of all attachments to this form have been filed in each well file.

___ 2. The original of this form and the original attachments have been filed in the Operator Change file.

---

**COMMENTS**

950927 Blm/SL Aprv. 9-19-95.

WE71/34-35

FORM 9

STATE OF UTAH
DIVISION OF OIL, GAS AND MINING

5. Lease Designation and Serial Number: UTU47812

# SUNDRY NOTICES AND REPORTS ON WELLS

6. If Indian, Allottee or Tribe Name:

Do not use this form for proposals to drill new wells, deepen existing wells, or to reenter plugged and abandoned wells. Use APPLICATION FOR PERMIT TO DRILL OR DEEPEN form for such proposals.

7. Unit Agreement Name:

1. Type of Well: OIL ☐ GAS ☒ OTHER:

8. Well Name and Number: LOGAN FEDERAL #1

2. Name of Operator: JN EXPLORATION & PRODUCTION, LP

9. API Well Number: 43-043-30186

3. Address and Telephone Number: P O BOX 7167, BILLINGS, MT 59103 (406) 248-2222

10. Field and Pool, or Wildcat: NORTH PINEVIEW

4. Location of Well

Footages:

County: SUMMIT

QQ, Sec.,T.,R.,M.: SENE Sec. 26, T3N-R7E

State: UTAH

11. CHECK APPROPRIATE BOXES TO INDICATE NATURE OF NOTICE, REPORT, OR OTHER DATA

**NOTICE OF INTENT** (Submit in Duplicate)

- ☐ Abandon
- ☐ Repair Casing
- ☐ Change of Plans
- ☐ Convert to Injection
- ☐ Fracture Treat or Acidize
- ☐ Multiple Completion
- ☐ New Construction
- ☐ Pull or Alter Casing
- ☐ Recomplete
- ☐ Reperforate
- ☐ Vent or Flare
- ☐ Water Shut-Off
- ☒ Other CHANGE OF OPERATOR

Approximate date work will start _____

**SUBSEQUENT REPORT** (Submit Original Form Only)

- ☐ Abandon *
- ☐ Repair Casing
- ☐ Change of Plans
- ☐ Convert to Injection
- ☐ Fracture Treat or Acidize
- ☐ Other _____
- ☐ New Construction
- ☐ Pull or Alter Casing
- ☐ Reperforate
- ☐ Vent or Flare
- ☐ Water Shut-Off

Date of work completion _____

Report results of Multiple Completions and Recompletions to different reservoirs on WELL COMPLETION OR RECOMPLETION REPORT AND LOG form.

* Must be accompanied by a cement verification report.

12. DESCRIBE PROPOSED OR COMPLETED OPERATIONS (Clearly state all pertinent details, and give pertinent dates. If well is directionally drilled, give subsurface locations and measured and true vertical depths for all markers and zones pertinent to this work.)

JN EXPLORATION & PRODUCTION, LP HAS SOLD ALL OF ITS INTEREST IN THE ABOVE REFERENCED WELL TO WILBANKS ACQUISITION I LLC, 1600 STOUT STREET, SUITE 1200, DENVER, CO 80202-3109

RIM OPERATING, INC. WILL ASSUME OPERATIONS OF THIS WELL FEBRUARY 14, 2001

13.

Name & Signature: RICHARD WALLING R Walling Title: VP OPERATIONS Date: 2-8-01

(This space for State use only)

RECEIVED
FEB 20 2001
DIVISION OF
OIL, GAS AND MINING

(4\94) (See Instructions on Reverse Side)

Form 3160-5
(November 1994)

UNITED STATES
DEPARTMENT OF THE INTERIOR
BUREAU OF LAND MANAGEMENT

FORM APPROVED
OMB No. 1004-0135
Expires July 31, 1996

# SUNDRY NOTICES AND REPORTS ON WELLS

***Do not use this form for proposals to drill or to re-enter an abandoned well. Use Form 3160-3 (APD) for such proposals.***

***SUBMIT IN TRIPLICATE - Other instructions on reverse side***

5. Lease Serial No. UTU47812
6. If Indian, Allottee or Tribe Name
7. If Unit or CA/Agreement, Name and/or No.
8. Well Name and No. LOGAN FEDERAL #1
9. API Well No. 4304330186
10. Field and Pool, or Exploratory Area NORTH PINEVIEW
11. County or Parish, State SUMMIT, UTAH

1. Type of Well ☐ Oil Well ☒ Gas Well ☐ Other
2. Name of Operator RIM OPERATING, INC.
3a. Address 5 INVERNESS DR.E., ENGLEWOOD,CO 80112
3b. Phone No. *(include area code)* (303) 799-9828
4. Location of Well *(Footage, Sec., T., R., M., or Survey Description)* SENE 26-T3N-R7E

12. CHECK APPROPRIATE BOX(ES) TO INDICATE NATURE OF NOTICE, REPORT, OR OTHER DATA

| TYPE OF SUBMISSION | TYPE OF ACTION | | | |
|---|---|---|---|---|
| ☐ Notice of Intent | ☐ Acidize | ☐ Deepen | ☐ Production (Start/Resume) | ☐ Water Shut-Off |
| ☐ Subsequent Report | ☐ Alter Casing | ☐ Fracture Treat | ☐ Reclamation | ☐ Well Integrity |
| ☐ Final Abandonment Notice | ☐ Casing Repair | ☐ New Construction | ☐ Recomplete | ☒ Other Chage of operator |
| | ☐ Change Plans | ☐ Plug and Abandon | ☐ Temporarily Abandon | |
| | ☐ Convert to Injection | ☐ Plug Back | ☐ Water Disposal | |

13. Describe Proposed or Completed Operation (clearly state all pertinent details, including estimated starting date of any proposed work and approximate duration thereof. If the proposal is to deepen directionally or recomplete horizontally, give subsurface locations and measured and true vertical depths of all pertinent markers and zones. Attach the Bond under which the work will be performed or provide the Bond No. on file with BLM/BIA. Required subsequent reports shall be filed within 30 days following completion of the involved operations. If the operation results in a multiple completion or recompletion in a new interval, a Form 3160-4 shall be filed once testing has been completed. Final Abandonment Notices shall be filed only after all requirements, including reclamation, have been completed, and the operator has determined that the site is ready for final inspection.)

Effective February 14, 2001, RIM Operating, Inc. will be responsible for compliance with all terms and conditions associated with that portion of the leases where the above well is located.

Bond coverage is provided by State of Utah Surety Bond RLB1427, Principal RIM Operating, Inc., Surety Underwriter's Indemnity, 10/7/99.

RIM Operating, Inc. is Agent for RIM LLP.

14. I hereby certify that the foregoing is true and correct
Name *(Printed/Typed)* Rene' Morin
Title Vice President
Signature Rene' Morin
Date 2/15/01

**THIS SPACE FOR FEDERAL OR STATE OFFICE USE**

Approved by [signature]
Title Field Manager
Date March 8, 2001
Office Salt Lake Field Office

Conditions of approval, if any, are attached. Approval of this notice does not warrant or certify that the applicant holds legal or equitable title to those rights in the subject lease which would entitle the applicant to conduct operations thereon.

Title 18 U.S.C. Section 1001, makes it a crime for any person knowingly and willfully to make to any department or agency of the United States any false, fictitious or fraudulent statements or representations as to any matter within its jurisdiction.

**STATE OF UTAH**
DEPARTMENT OF NATURAL RESOURCES
DIVISION OF OIL, GAS AND MINING

FORM 9

# SUNDRY NOTICES AND REPORTS ON WELLS

Do not use this form for proposals to drill new wells, significantly deepen existing wells below current bottom-hole depth, reenter plugged wells, or to drill horizontal laterals. Use APPLICATION FOR PERMIT TO DRILL form for such proposals.

5. LEASE DESIGNATION AND SERIAL NUMBER: UTU47812
6. IF INDIAN, ALLOTTEE OR TRIBE NAME:
7. UNIT or CA AGREEMENT NAME:
8. WELL NAME and NUMBER: LOGAN FEDERAL #1
9. API NUMBER: 43-043-30186
10. FIELD AND POOL, OR WILDCAT: NORTH PINEVIEW

1. TYPE OF WELL: OIL WELL [ ] GAS WELL [X] OTHER
2. NAME OF OPERATOR: RIM OPERATING, INC.
3. ADDRESS OF OPERATOR: 5 INVERNESS DRIVE EAST, ENGLEWOOD, COLORADO 80112 — PHONE NUMBER: (303) 799-9828
4. LOCATION OF WELL
FOOTAGES AT SURFACE:
COUNTY: SUMMIT
QTR/QTR, SECTION, TOWNSHIP, RANGE, MERIDIAN: SE NE SECTION 26-3N-7E
STATE: UTAH
UTAH

11. CHECK APPROPRIATE BOXES TO INDICATE NATURE OF NOTICE, REPORT, OR OTHER DATA

| TYPE OF SUBMISSION | TYPE OF ACTION | | |
|---|---|---|---|
| [ ] NOTICE OF INTENT (Submit in Duplicate) | [ ] ACIDIZE | [ ] DEEPEN | [ ] REPERFORATE CURRENT FORMATION |
| Approximate date work will start: | [ ] ALTER CASING | [ ] FRACTURE TREAT | [ ] SIDETRACK TO REPAIR WELL |
| | [ ] CASING REPAIR | [ ] NEW CONSTRUCTION | [ ] TEMPORARILY ABANDON |
| | [ ] CHANGE TO PREVIOUS PLANS | [X] OPERATOR CHANGE | [ ] TUBING REPAIR |
| | [ ] CHANGE TUBING | [ ] PLUG AND ABANDON | [ ] VENT OR FLARE |
| [X] SUBSEQUENT REPORT (Submit Original Form Only) | [ ] CHANGE WELL NAME | [ ] PLUG BACK | [ ] WATER DISPOSAL |
| Date of work completion: | [ ] CHANGE WELL STATUS | [ ] PRODUCTION (START/RESUME) | [ ] WATER SHUT-OFF |
| | [ ] COMMINGLE PRODUCING FORMATIONS | [ ] RECLAMATION OF WELL SITE | [ ] OTHER: |
| | [ ] CONVERT WELL TYPE | [ ] RECOMPLETE - DIFFERENT FORMATION | |

12. DESCRIBE PROPOSED OR COMPLETED OPERATIONS. Clearly show all pertinent details including dates, depths, volumes, etc.

Effective February 14, 2001, RIM Operating, Inc. will be responsible for compliance with all terms and conditions associated with that portion of the leases where the above well is located.

Bond coverage is provided by State of Utah Surety Bond RLB1427, Principal RIM Operating, Inc., Surety Underwriter's Indemnity, 10/7/99.

RIM Operating, Inc. is Agent for RIM LLP.

NAME (PLEASE PRINT) Rene' Morin TITLE Vice President
SIGNATURE Rene' Morin DATE 2/15/01

(This space for State use only)

RECEIVED
FEB 20 2001
DIVISION OF OIL, GAS AND MINING

(5/2000) (See Instructions on Reverse Side)

Division of Oil, Gas and Mining

# OPERATOR CHANGE WORKSHEET

**ROUTING**

| | | |
|---|---|---|
| 1. GLH | | 4-KAS |
| 2. CDW ✓ | | 5-LP ✓ |
| 3. JLT | | 6-FILE |

Enter date after each listed item is completed

**X Change of Operator (Well Sold)** Designation of Agent

Operator Name Change (Only) Merger

The operator of the well(s) listed below has changed, effective: **2-14-2001**

| **FROM:** (Old Operator): | **TO:** ( New Operator): |
|---|---|
| J N EXPLORATION & PRODUCTION LP | RIM OPERATING INC |
| Address: P O BOX 7167 | Address: 5 INVERNESS DR E |
| | |
| BILLINGS, MT 59103 | ENGLEWOOD, CO 80112 |
| Phone: 1-(406)-248-2222 | Phone: 1-(303)-799-9828 |
| Account N2955 | Account N1045 |

**CA No.** **Unit:**

**WELL(S)**

| NAME | API NO. | ENTITY NO. | SEC. TWN RNG | LEASE TYPE | WELL TYPE | WELL STATUS |
|---|---|---|---|---|---|---|
| LOGAN FEDERAL 2-A | 43-043-30223 | 2775 | 26-03N-07E | FEDERAL | SWD | A |
| LOGAN FEDERAL 1 | 43-043-30186 | 2775 | 26-03N-07E | FEDERAL | OW | P |
| | | | | | | |
| | | | | | | |
| | | | | | | |
| | | | | | | |
| | | | | | | |
| | | | | | | |
| | | | | | | |
| | | | | | | |

## OPERATOR CHANGES DOCUMENTATION

1. (R649-8-10) Sundry or legal documentation was received from the **FORMER** operator on: 02/20/2001
2. (R649-8-10) Sundry or legal documentation was received from the **NEW** operator on: 02/20/2001
3. The new company has been checked through the **Department of Commerce, Division of Corporations Database on:** 09/06/2001
4. Is the new operator registered in the State of Utah: YES Business Number: 1462814-0143
5. If **NO**, the operator was contacted contacted on: N/A
6. **Federal and Indian Lease Wells:** The BLM and or the BIA has approved the (merger, name change, or operator change for all wells listed on Federal or Indian leases on: 03/08/2001
7. **Federal and Indian Units:** The BLM or BIA has approved the successor of unit operator for wells listed on: N/A

8. **Federal and Indian Communization Agreements ("CA"):** The BLM or the BIA has approved the operator change for all wells listed involved in a CA on: N/A

9. **Underground Injection Control ("UIC")** The Division has approved UIC Form 5, **Transfer of Authority to Inject,** for the enhanced/secondary recovery unit/project for the water disposal well(s) listed on: 09/06/2001

## DATA ENTRY:

1. Changes entered in the **Oil and Gas Database on:** 09/06/2001
2. Changes have been entered on the **Monthly Operator Change Spread Sheet on:** 09/06/2001
3. Bond information entered in RBDMS on: N/A
4. Fee wells attached to bond in RBDMS on: N/A

## STATE BOND VERIFICATION:

1. State well(s) covered by Bond No.: N/A

## FEE WELLS - BOND VERIFICATION/LEASE INTEREST OWNER NOTIFICATION:

1. (R649-3-1) The **NEW** operator of any fee well(s) listed has furnished a bond: N/A
2. The **FORMER** operator has requested a release of liability from their bond on: N/A
   The Division sent response by letter on: N/A
3. (R649-2-10) The **FORMER** operator of the Fee wells has been contacted and informed by a letter from the Division of their responsibility to notify all interest owners of this change on: N/A

## FEDERAL BOND VERIFICATION:

1. Federal well(s) covered by Bond No.: RLB 1427

## FILMING:

1. All attachments to this form have been **MICROFILMED** on:

## FILING:

1. **ORIGINALS/COPIES** of all attachments pertaining to each individual well have been filled in each well file on: _____

**COMMENTS:**

Division of Oil, Gas and Mining

# OPERATOR CHANGE WORKSHEET (for state use only)

**ROUTING**
CDW

**X - Change of Operator (Well Sold)** Operator Name Change/Merger

The operator of the well(s) listed below has changed, effective: **10/1/2012**

| **FROM:** (Old Operator): | **TO:** ( New Operator): |
|---|---|
| N1045- RIM Operating, Inc. | N3920- EnerQuest Operating, LLC. |
| 5 Inverness Drive East | 9400 Broadway Ext, Suite 75 |
| Englewood, CO 80112 | Oklahoma City, OK 73114 |
| Phone: 1 (303) 799-9828 | Phone: 1 (405) 478-3300 |

**CA No.** **Unit:** N/A

| WELL NAME | SEC | TWN | RNG | API NO | ENTITY NO | LEASE TYPE | WELL TYPE | WELL STATUS |
|---|---|---|---|---|---|---|---|---|
| Logan Fed 1 | 26 | 03N | 07E | 4304330186 | 2775 | Federal | OW | P |

## OPERATOR CHANGES DOCUMENTATION

**Enter date after each listed item is completed**

1. (R649-8-10) Sundry or legal documentation was received from the **FORMER** operator on: 11/20/2012
2. (R649-8-10) Sundry or legal documentation was received from the **NEW** operator on: 10/24/2012
3. The new company was checked on the **Department of Commerce, Division of Corporations Database on:** 11/21/2012

4a. Is the new operator registered in the State of Utah: _____ Business Number: 8451859-0161

5a. (R649-9-2)Waste Management Plan has been received on: N/A

5b. Inspections of LA PA state/fee well sites complete on: N/A

5c. Reports current for Production/Disposition & Sundries on: 11/21/2012

6. **Federal and Indian Lease Wells:** The BLM and or the BIA has approved the merger, name change, or operator change for all wells listed on Federal or Indian leases on: BLM Not Yet BIA N/A
7. **Federal and Indian Units:**
   The BLM or BIA has approved the successor of unit operator for wells listed on: N/A
8. **Federal and Indian Communization Agreements ("CA"):**
   The BLM or BIA has approved the operator for all wells listed within a CA on: N/A
9. **Underground Injection Control ("UIC")** Division has approved UIC Form 5 Transfer of Authority to **Inject,** for the enhanced/secondary recovery unit/project for the water disposal well(s) listed on: N/A

## DATA ENTRY:

1. Changes entered in the **Oil and Gas Database on:** 11/21/2012
2. Changes have been entered on the **Monthly Operator Change Spread Sheet on:** 11/21/2012
3. Bond information entered in RBDMS on: 11/21/2012
4. Fee/State wells attached to bond in RBDMS on: N/A
5. Injection Projects to new operator in RBDMS on: N/A
6. Receipt of Acceptance of Drilling Procedures for APD/New on: N/A

## BOND VERIFICATION:

1. Federal well(s) covered by Bond Number: UTB000526
2. Indian well(s) covered by Bond Number: N/A

3a. (R649-3-1) The **NEW** operator of any state/fee well(s) listed covered by Bond Number N/A

3b. The **FORMER** operator has requested a release of liability from their bond on: N/A

## LEASE INTEREST OWNER NOTIFICATION:

4. (R649-2-10) The **NEW** operator of the fee wells has been contacted and informed by a letter from the Division of their responsibility to notify all interest owners of this change on: N/A

**COMMENTS:**

FORM 9

**STATE OF UTAH**
DEPARTMENT OF NATURAL RESOURCES
DIVISION OF OIL, GAS AND MINING

5. LEASE DESIGNATION AND SERIAL NUMBER: UTU-47812

# SUNDRY NOTICES AND REPORTS ON WELLS

6. IF INDIAN, ALLOTTEE OR TRIBE NAME: NA

7. UNIT or CA AGREEMENT NAME: NA

Do not use this form for proposals to drill new wells, significantly deepen existing wells below current bottom-hole depth, reenter plugged wells, or to drill horizontal laterals. Use APPLICATION FOR PERMIT TO DRILL form for such proposals.

1. TYPE OF WELL: OIL WELL ☑ GAS WELL ☐ OTHER _____

8. WELL NAME and NUMBER: Logan Federal #1

2. NAME OF OPERATOR: EnerQuest Operating L.L.C. N3920

9. API NUMBER: 4304330186

3. ADDRESS OF OPERATOR: 9400 Broadway Ext, Suite 75 CITY Oklahoma City STATE OK ZIP 73114 PHONE NUMBER: (405) 478-3300

10. FIELD AND POOL, OR WILDCAT: North Pineview

4. LOCATION OF WELL

FOOTAGES AT SURFACE: 1659' FNL & 689' FEL COUNTY: Summit

QTR/QTR, SECTION, TOWNSHIP, RANGE, MERIDIAN: SENE 26 3N 7E STATE: UTAH

11. CHECK APPROPRIATE BOXES TO INDICATE NATURE OF NOTICE, REPORT, OR OTHER DATA

| TYPE OF SUBMISSION | TYPE OF ACTION | | |
|---|---|---|---|
| ☐ NOTICE OF INTENT (Submit in Duplicate) | ☐ ACIDIZE | ☐ DEEPEN | ☐ REPERFORATE CURRENT FORMATION |
| Approximate date work will start: | ☐ ALTER CASING | ☐ FRACTURE TREAT | ☐ SIDETRACK TO REPAIR WELL |
| | ☐ CASING REPAIR | ☐ NEW CONSTRUCTION | ☐ TEMPORARILY ABANDON |
| | ☐ CHANGE TO PREVIOUS PLANS | ☑ OPERATOR CHANGE | ☐ TUBING REPAIR |
| | ☐ CHANGE TUBING | ☐ PLUG AND ABANDON | ☐ VENT OR FLARE |
| ☑ SUBSEQUENT REPORT (Submit Original Form Only) | ☐ CHANGE WELL NAME | ☐ PLUG BACK | ☐ WATER DISPOSAL |
| Date of work completion: | ☐ CHANGE WELL STATUS | ☐ PRODUCTION (START/RESUME) | ☐ WATER SHUT-OFF |
| | ☐ COMMINGLE PRODUCING FORMATIONS | ☐ RECLAMATION OF WELL SITE | ☐ OTHER: _____ |
| | ☐ CONVERT WELL TYPE | ☐ RECOMPLETE - DIFFERENT FORMATION | |

12. DESCRIBE PROPOSED OR COMPLETED OPERATIONS. Clearly show all pertinent details including dates, depths, volumes, etc.

Effective October 1, 2012 EnerQuest Operating L.L.C. will be taking over operatorship of the above mentioned well from Rim Operating, Inc., 5 Inverness Drive East, Englewood, CO 80112, 303-799-9829.

Bond coverage will be a "Personal Bond and Letter of Credit" - BLM Bond #UTB000526 (see attached documentation).

NAME (PLEASE PRINT) Matthew J. Mollman TITLE Vice President

SIGNATURE Matthew J. Mollman DATE 10/1/2012

(This space for State use only)

APPROVED

NOV 21 2012

DIV. OIL GAS & MINING

BY: Rachel Medina

RECEIVED

OCT 24 2012

DIV. OF OIL, GAS & MINING

(5/2000) (See Instructions on Reverse Side)

# United States Department of the Interior

BUREAU OF LAND MANAGEMENT
Utah State Office
P.O. Box 45155
Salt Lake City, UT 84145-0155
http://www.blm.gov/ut/st/en.html

IN REPLY REFER TO:
3104 (UTB000526)
UT-922000

OCT 19 2012

CERTIFIED MAIL – Return Receipt Requested
7010 3090 0000 8061 1226
7010 0780 00000 5750 1623

DECISION

| | |
|---|---|
| Obligor:<br>EnerQuest Operating, LLC<br>9400 Broadway Ext., Suite 750<br>Oklahoma City, Oklahoma 73114 | **BLM Bond No.: UTB000526**<br><br>Bond Type: Individual Oil & Gas |
| Financial Institution:<br>BancFirst<br>101 N. Broadway<br>Oklahoma City, Oklahoma 73102 | Bond Amount: $10,000<br><br>Lease Number: UTU47812 |

Personal Bond and Letter of Credit Accepted for Individual Lease

On October 16, 2012, this office received a personal bond and Letter of Credit (LOC) in the amount of $10,000 for coverage of all operations conducted by or on behalf of EnerQuest Operating, LLC on Federal oil and gas lease UTU47812. The bond and LOC have been examined, found satisfactory and are accepted October 16, 2012.

The pledge for the bond is a LOC written by the financial institution named above. The document will be retained by the Bureau of Land Management (BLM) until all terms and conditions of the lease have been fulfilled or a satisfactory replacement bond has been accepted. The LOC will be returned to the financial institution when this office determines that the bond is no longer required.

The LOC will continue indefinitely in the absence of notice from the financial institution of its determination not to renew the letter. Such a notice must be received in this office at least 90 days prior to the original expiration date of October 15, 2013, or the automatic extension dates falling on the same day in subsequent years. A copy of such notice also needs to be provided to the obligor, who would then be responsible for providing a replacement security to the BLM. Unless the obligor provides a satisfactory replacement bond at least 30 days prior to the then

fixed expiration date, the BLM will demand that the financial institution pay the full amount of the credit to ensure continuing bond coverage of the obligor. Any such funds thus obtained will be retained, as long as none are required to correct defaults, until the bond is no longer required or replacement bond coverage is accepted by the BLM.

If you have any questions, please contact Diane McComb of this office at (801) 539-4041.

Becky J. Hammond
Acting Chief, Branch of Minerals

cc: UT-922 (Al McKee)

**STATE OF UTAH**
DEPARTMENT OF NATURAL RESOURCES
DIVISION OF OIL, GAS AND MINING

FORM 9

# SUNDRY NOTICES AND REPORTS ON WELLS

Do not use this form for proposals to drill new wells, significantly deepen existing wells below current bottom-hole depth, reenter plugged wells, or to drill horizontal laterals. Use APPLICATION FOR PERMIT TO DRILL form for such proposals.

5. LEASE DESIGNATION AND SERIAL NUMBER: **2775**

6. IF INDIAN, ALLOTTEE OR TRIBE NAME:

7. UNIT or CA AGREEMENT NAME:

1. TYPE OF WELL: OIL WELL [X] GAS WELL [ ] OTHER _____

8. WELL NAME and NUMBER: **Logan Federal #1**

2. NAME OF OPERATOR: **RIM Operating, Inc.** N1045

9. API NUMBER: **43-037-30186**

3. ADDRESS OF OPERATOR: **5 Inverness Drive East Englewood CO 80112**

PHONE NUMBER:

10. FIELD AND POOL, OR WILDCAT: **North Pineview - Nugget**

4. LOCATION OF WELL

FOOTAGES AT SURFACE: **1658 FNL & 690 FEL**

COUNTY: **Summit**

QTR/QTR, SECTION, TOWNSHIP, RANGE, MERIDIAN: **SE NE sec. 26 T3N R7E**

STATE: **UTAH**

11. CHECK APPROPRIATE BOXES TO INDICATE NATURE OF NOTICE, REPORT, OR OTHER DATA

| TYPE OF SUBMISSION | TYPE OF ACTION | | |
|---|---|---|---|
| [ ] NOTICE OF INTENT (Submit in Duplicate) | [ ] ACIDIZE | [ ] DEEPEN | [ ] REPERFORATE CURRENT FORMATION |
| Approximate date work will start: _____ | [ ] ALTER CASING | [ ] FRACTURE TREAT | [ ] SIDETRACK TO REPAIR WELL |
| | [ ] CASING REPAIR | [ ] NEW CONSTRUCTION | [ ] TEMPORARILY ABANDON |
| | [ ] CHANGE TO PREVIOUS PLANS | [X] OPERATOR CHANGE | [ ] TUBING REPAIR |
| | [ ] CHANGE TUBING | [ ] PLUG AND ABANDON | [ ] VENT OR FLARE |
| [X] SUBSEQUENT REPORT (Submit Original Form Only) | [ ] CHANGE WELL NAME | [ ] PLUG BACK | [ ] WATER DISPOSAL |
| Date of work completion: | [ ] CHANGE WELL STATUS | [ ] PRODUCTION (START/RESUME) | [ ] WATER SHUT-OFF |
| _____ | [ ] COMMINGLE PRODUCING FORMATIONS | [ ] RECLAMATION OF WELL SITE | [ ] OTHER _____ |
| | [ ] CONVERT WELL TYPE | [ ] RECOMPLETE - DIFFERENT FORMATION | |

12. DESCRIBE PROPOSED OR COMPLETED OPERATIONS. Clearly show all pertinent details including dates, depths, volumes, etc.

**RIM Operating, Inc. transferred their interest to EnerQuest Oil & Gas, L.L.C. As a result EnerQuest assumed operations from RIM Operating, Inc. effective 10/1/2012.**

NAME (PLEASE PRINT): **Kenneth J. Kundrik** TITLE: **Operations Manager**

SIGNATURE: Kenneth J. Kundrik DATE: **11/14/2012**

(This space for State use only)

**APPROVED**

NOV 21 2012

DIV. OIL GAS & MINING

BY: Rachel Medina

(5/2000) (See Instructions on Reverse Side)

RECEIVED

NOV 20 2012

Div. of Oil, Gas & Mining

**FEDERAL APPROVAL OF THIS ACTION IS NECESSARY**

FORM 9

# STATE OF UTAH
DEPARTMENT OF NATURAL RESOURCES
DIVISION OF OIL, GAS, AND MINING

**5.LEASE DESIGNATION AND SERIAL NUMBER:** U-47812

## SUNDRY NOTICES AND REPORTS ON WELLS

Do not use this form for proposals to drill new wells, significantly deepen existing wells below current bottom-hole depth, reenter plugged wells, or to drill horizontal laterals. Use APPLICATION FOR PERMIT TO DRILL form for such proposals.

**6. IF INDIAN, ALLOTTEE OR TRIBE NAME:**

**7.UNIT or CA AGREEMENT NAME:**

**1. TYPE OF WELL**
Oil Well

**8. WELL NAME and NUMBER:** LOGAN FED 1

**2. NAME OF OPERATOR:**
ENERQUEST OPERATING, LLC

**9. API NUMBER:** 43043301860000

**3. ADDRESS OF OPERATOR:**
12368 Market Drive , Oklahoma City, OK, 73114

**PHONE NUMBER:** 405 478-3300 Ext

**9. FIELD and POOL or WILDCAT:** NORTH PINEVIEW

**4. LOCATION OF WELL**
**FOOTAGES AT SURFACE:**
1659 FNL 0689 FEL
**QTR/QTR, SECTION, TOWNSHIP, RANGE, MERIDIAN:**
Qtr/Qtr: SENE Section: 26 Township: 03.0N Range: 07.0E Meridian: S

**COUNTY:** SUMMIT

**STATE:** UTAH

**11.**
CHECK APPROPRIATE BOXES TO INDICATE NATURE OF NOTICE, REPORT, OR OTHER DATA

| TYPE OF SUBMISSION | TYPE OF ACTION | | |
|---|---|---|---|
| ✓ NOTICE OF INTENT<br>Approximate date work will start:<br>12/9/2014 | ☐ ACIDIZE | ☐ ALTER CASING | ☐ CASING REPAIR |
| | ☐ CHANGE TO PREVIOUS PLANS | ☐ CHANGE TUBING | ☐ CHANGE WELL NAME |
| | ☐ CHANGE WELL STATUS | ☐ COMMINGLE PRODUCING FORMATIONS | ☐ CONVERT WELL TYPE |
| ☐ SUBSEQUENT REPORT<br>Date of Work Completion: | ☐ DEEPEN | ☐ FRACTURE TREAT | ☐ NEW CONSTRUCTION |
| | ☐ OPERATOR CHANGE | ☐ PLUG AND ABANDON | ☐ PLUG BACK |
| | ☐ PRODUCTION START OR RESUME | ☐ RECLAMATION OF WELL SITE | ☐ RECOMPLETE DIFFERENT FORMATION |
| ☐ SPUD REPORT<br>Date of Spud: | ☐ REPERFORATE CURRENT FORMATION | ☐ SIDETRACK TO REPAIR WELL | ☐ TEMPORARY ABANDON |
| | ☐ TUBING REPAIR | ☐ VENT OR FLARE | ☐ WATER DISPOSAL |
| ☐ DRILLING REPORT<br>Report Date: | ☐ WATER SHUTOFF | ☐ SI TA STATUS EXTENSION | ☐ APD EXTENSION |
| | ☐ WILDCAT WELL DETERMINATION | ✓ OTHER | OTHER: Jet well with nitrogen |

**12. DESCRIBE PROPOSED OR COMPLETED OPERATIONS. Clearly show all pertinent details including dates, depths, volumes, etc.**

Intect nitrogen down 1-1/2" tubing for 1 day to unload well.

**Accepted by the Utah Division of Oil, Gas and Mining**

**Date:** December 08, 2014

**By:** Dark K Quist

| NAME (PLEASE PRINT) | PHONE NUMBER | TITLE |
|---|---|---|
| Charles M Burkhardt | 405 478-3300 | Senior Engineering Tech |

| SIGNATURE | DATE |
|---|---|
| N/A | 12/8/2014 |

RECEIVED: Dec. 08, 2014

**FEDERAL APPROVAL OF THIS ACTION IS NECESSARY**

FORM 9

# STATE OF UTAH
DEPARTMENT OF NATURAL RESOURCES
DIVISION OF OIL, GAS, AND MINING

**5.LEASE DESIGNATION AND SERIAL NUMBER:** U-47812

## SUNDRY NOTICES AND REPORTS ON WELLS

Do not use this form for proposals to drill new wells, significantly deepen existing wells below current bottom-hole depth, reenter plugged wells, or to drill horizontal laterals. Use APPLICATION FOR PERMIT TO DRILL form for such proposals.

**6. IF INDIAN, ALLOTTEE OR TRIBE NAME:**

**7.UNIT or CA AGREEMENT NAME:**

**1. TYPE OF WELL**
Oil Well

**8. WELL NAME and NUMBER:** LOGAN FED 1

**2. NAME OF OPERATOR:**
ENERQUEST OPERATING, LLC

**9. API NUMBER:** 43043301860000

**3. ADDRESS OF OPERATOR:**
12368 Market Drive , Oklahoma City, OK, 73114

**PHONE NUMBER:** 405 478-3300 Ext

**9. FIELD and POOL or WILDCAT:** NORTH PINEVIEW

**4. LOCATION OF WELL**
**FOOTAGES AT SURFACE:**
1659 FNL 0689 FEL
**QTR/QTR, SECTION, TOWNSHIP, RANGE, MERIDIAN:**
Qtr/Qtr: SENE Section: 26 Township: 03.0N Range: 07.0E Meridian: S

**COUNTY:** SUMMIT

**STATE:** UTAH

**11.**
CHECK APPROPRIATE BOXES TO INDICATE NATURE OF NOTICE, REPORT, OR OTHER DATA

| TYPE OF SUBMISSION | TYPE OF ACTION | | |
|---|---|---|---|
| ✓ NOTICE OF INTENT<br>Approximate date work will start:<br>12/18/2014 | ☐ ACIDIZE | ☐ ALTER CASING | ☐ CASING REPAIR |
| | ☐ CHANGE TO PREVIOUS PLANS | ☐ CHANGE TUBING | ☐ CHANGE WELL NAME |
| | ☐ CHANGE WELL STATUS | ☐ COMMINGLE PRODUCING FORMATIONS | ☐ CONVERT WELL TYPE |
| ☐ SUBSEQUENT REPORT<br>Date of Work Completion: | ☐ DEEPEN | ☐ FRACTURE TREAT | ☐ NEW CONSTRUCTION |
| | ☐ OPERATOR CHANGE | ☐ PLUG AND ABANDON | ☐ PLUG BACK |
| | ☐ PRODUCTION START OR RESUME | ☐ RECLAMATION OF WELL SITE | ☐ RECOMPLETE DIFFERENT FORMATION |
| ☐ SPUD REPORT<br>Date of Spud: | ☐ REPERFORATE CURRENT FORMATION | ☐ SIDETRACK TO REPAIR WELL | ☐ TEMPORARY ABANDON |
| | ☐ TUBING REPAIR | ☐ VENT OR FLARE | ☐ WATER DISPOSAL |
| ☐ DRILLING REPORT<br>Report Date: | ☐ WATER SHUTOFF | ☐ SI TA STATUS EXTENSION | ☐ APD EXTENSION |
| | ☐ WILDCAT WELL DETERMINATION | ✓ OTHER | OTHER: Pull coil tubing. |

**12. DESCRIBE PROPOSED OR COMPLETED OPERATIONS. Clearly show all pertinent details including dates, depths, volumes, etc.**

Remove 1 ½" coil tubing velocity string from wellbore. Inspect, repair and run the 1 ½" velocity string back in the hole . Operations will commence as soon as equipment is available and weather will permit operations.

**Accepted by the Utah Division of Oil, Gas and Mining**

**Date:** January 29, 2015

**By:** Dark K Quist

| NAME (PLEASE PRINT) | PHONE NUMBER | TITLE |
|---|---|---|
| Charles M Burkhardt | 405 478-3300 | Senior Engineering Tech |

| SIGNATURE | DATE |
|---|---|
| N/A | 12/16/2014 |

RECEIVED: Dec. 16, 2014

**STATE OF UTAH**
DEPARTMENT OF NATURAL RESOURCES
DIVISION OF OIL, GAS, AND MINING

**FORM 9**

**5.LEASE DESIGNATION AND SERIAL NUMBER:** U-47812

## SUNDRY NOTICES AND REPORTS ON WELLS

Do not use this form for proposals to drill new wells, significantly deepen existing wells below current bottom-hole depth, reenter plugged wells, or to drill horizontal laterals. Use APPLICATION FOR PERMIT TO DRILL form for such proposals.

**6. IF INDIAN, ALLOTTEE OR TRIBE NAME:**

**7.UNIT or CA AGREEMENT NAME:**

**1. TYPE OF WELL**
Oil Well

**8. WELL NAME and NUMBER:** LOGAN FED 1

**2. NAME OF OPERATOR:**
ENERQUEST OPERATING, LLC

**9. API NUMBER:** 43043301860000

**3. ADDRESS OF OPERATOR:**
12368 Market Drive , Oklahoma City, OK, 73114

**PHONE NUMBER:** 405 478-3300 Ext

**9. FIELD and POOL or WILDCAT:** NORTH PINEVIEW

**4. LOCATION OF WELL**
**FOOTAGES AT SURFACE:**
1659 FNL 0689 FEL
**QTR/QTR, SECTION, TOWNSHIP, RANGE, MERIDIAN:**
Qtr/Qtr: SENE Section: 26 Township: 03.0N Range: 07.0E Meridian: S

**COUNTY:** SUMMIT

**STATE:** UTAH

**11.**
CHECK APPROPRIATE BOXES TO INDICATE NATURE OF NOTICE, REPORT, OR OTHER DATA

**TYPE OF SUBMISSION**

- ☐ NOTICE OF INTENT
  Approximate date work will start:
- ✓ SUBSEQUENT REPORT
  Date of Work Completion: 12/9/2014
- ☐ SPUD REPORT
  Date of Spud:
- ☐ DRILLING REPORT
  Report Date:

**TYPE OF ACTION**

| | | |
|---|---|---|
| ☐ ACIDIZE | ☐ ALTER CASING | ☐ CASING REPAIR |
| ☐ CHANGE TO PREVIOUS PLANS | ☐ CHANGE TUBING | ☐ CHANGE WELL NAME |
| ☐ CHANGE WELL STATUS | ☐ COMMINGLE PRODUCING FORMATIONS | ☐ CONVERT WELL TYPE |
| ☐ DEEPEN | ☐ FRACTURE TREAT | ☐ NEW CONSTRUCTION |
| ☐ OPERATOR CHANGE | ☐ PLUG AND ABANDON | ☐ PLUG BACK |
| ☐ PRODUCTION START OR RESUME | ☐ RECLAMATION OF WELL SITE | ☐ RECOMPLETE DIFFERENT FORMATION |
| ☐ REPERFORATE CURRENT FORMATION | ☐ SIDETRACK TO REPAIR WELL | ☐ TEMPORARY ABANDON |
| ☐ TUBING REPAIR | ☐ VENT OR FLARE | ☐ WATER DISPOSAL |
| ☐ WATER SHUTOFF | ☐ SI TA STATUS EXTENSION | ☐ APD EXTENSION |
| ☐ WILDCAT WELL DETERMINATION | ✓ OTHER | OTHER: Jet well with nitrogen |

**12. DESCRIBE PROPOSED OR COMPLETED OPERATIONS. Clearly show all pertinent details including dates, depths, volumes, etc.**

12/9/2014 IPS moved equipment onto location. 1300 SCF of nitrogen was injected down 2 7/8" tubing and coiled tubing. Equipment was moved off location.

**Accepted by the Utah Division of Oil, Gas and Mining**
**FOR RECORD ONLY**
February 19, 2015

| NAME (PLEASE PRINT) | PHONE NUMBER | TITLE |
|---|---|---|
| Charles M Burkhardt | 405 478-3300 | Senior Engineering Tech |

| SIGNATURE | DATE |
|---|---|
| N/A | 2/18/2015 |

RECEIVED: Feb. 18, 2015

**STATE OF UTAH**
DEPARTMENT OF NATURAL RESOURCES
DIVISION OF OIL, GAS, AND MINING

**FORM 9**

**5.LEASE DESIGNATION AND SERIAL NUMBER:** U-47812

## SUNDRY NOTICES AND REPORTS ON WELLS

Do not use this form for proposals to drill new wells, significantly deepen existing wells below current bottom-hole depth, reenter plugged wells, or to drill horizontal laterals. Use APPLICATION FOR PERMIT TO DRILL form for such proposals.

**6. IF INDIAN, ALLOTTEE OR TRIBE NAME:**

**7.UNIT or CA AGREEMENT NAME:**

**1. TYPE OF WELL**
Oil Well

**8. WELL NAME and NUMBER:** LOGAN FED 1

**2. NAME OF OPERATOR:**
ENERQUEST OPERATING, LLC

**9. API NUMBER:** 43043301860000

**3. ADDRESS OF OPERATOR:**
12368 Market Drive , Oklahoma City, OK, 73114

**PHONE NUMBER:** 405 478-3300 Ext

**9. FIELD and POOL or WILDCAT:** NORTH PINEVIEW

**4. LOCATION OF WELL**
**FOOTAGES AT SURFACE:**
1659 FNL 0689 FEL
**QTR/QTR, SECTION, TOWNSHIP, RANGE, MERIDIAN:**
Qtr/Qtr: SENE Section: 26 Township: 03.0N Range: 07.0E Meridian: S

**COUNTY:** SUMMIT

**STATE:** UTAH

**11.**
CHECK APPROPRIATE BOXES TO INDICATE NATURE OF NOTICE, REPORT, OR OTHER DATA

**TYPE OF SUBMISSION**

- ☐ NOTICE OF INTENT
  Approximate date work will start:
- ✓ SUBSEQUENT REPORT
  Date of Work Completion: 2/7/2015
- ☐ SPUD REPORT
  Date of Spud:
- ☐ DRILLING REPORT
  Report Date:

**TYPE OF ACTION**

| | | |
|---|---|---|
| ☐ ACIDIZE | ☐ ALTER CASING | ☐ CASING REPAIR |
| ☐ CHANGE TO PREVIOUS PLANS | ☐ CHANGE TUBING | ☐ CHANGE WELL NAME |
| ☐ CHANGE WELL STATUS | ☐ COMMINGLE PRODUCING FORMATIONS | ☐ CONVERT WELL TYPE |
| ☐ DEEPEN | ☐ FRACTURE TREAT | ☐ NEW CONSTRUCTION |
| ☐ OPERATOR CHANGE | ☐ PLUG AND ABANDON | ☐ PLUG BACK |
| ☐ PRODUCTION START OR RESUME | ☐ RECLAMATION OF WELL SITE | ☐ RECOMPLETE DIFFERENT FORMATION |
| ☐ REPERFORATE CURRENT FORMATION | ☐ SIDETRACK TO REPAIR WELL | ☐ TEMPORARY ABANDON |
| ☐ TUBING REPAIR | ☐ VENT OR FLARE | ☐ WATER DISPOSAL |
| ☐ WATER SHUTOFF | ☐ SI TA STATUS EXTENSION | ☐ APD EXTENSION |
| ☐ WILDCAT WELL DETERMINATION | ✓ OTHER | OTHER: Pull coil tubing. |

**12. DESCRIBE PROPOSED OR COMPLETED OPERATIONS. Clearly show all pertinent details including dates, depths, volumes, etc.**

2/2/2015 IPS moved equipment onto location and rigged up. 2/3/2015 thru 2/6/2015 Attempted to pull 1 1/2" coiled tubing(see attachments). Recovered approximately 3,145'. Could not get a hold of the rest. 2/7/2015 Equipment was released and moved off location.

**Accepted by the Utah Division of Oil, Gas and Mining**
**FOR RECORD ONLY**
March 26, 2015

| NAME (PLEASE PRINT) | PHONE NUMBER | TITLE |
|---|---|---|
| Charles M Burkhardt | 405 478-3300 | Senior Engineering Tech |

| SIGNATURE | DATE |
|---|---|
| N/A | 3/19/2015 |

RECEIVED: Mar. 19, 2015

IPT — Integrated Petroleum Technologies, Inc.

# Daily Completion Report

| Date | Company | Well Name & Number | County | State | API Number | GL | KB |
|---|---|---|---|---|---|---|---|
| 2/2/15 | Enerquest Oil & Gas, LLC | Logan Federal #1 | Summit | UT | 43-043-30186 | 7489 | 7514 |

| Report Day | TVD | TMD | PBTD | QtrQtr Sec-Twp-Rge | Daily Cost | Cumulative Cost | AFE Amount |
|---|---|---|---|---|---|---|---|
| 4 | 13,492' | 13,492' | 12,822' | SENE Sec 26-T3N-R7E | $21,271 | $27,867 | |

Directions to Location: Travel SW on Yellow crk RD 16 miles turn south on Dirt road, 7 mile at pavement Gate on right, 7 miles to loa

Supervisor: Bo Stinson

Actual Operations Current 24 Hours: Pulled in equipment, roads muddy, spot in equipment, blow down tubing & cleaned casing valve

Proposed Operations Next 24 Hours: Bleed down 9.625 Casing to check against 7" casing and kill well and pull Coil tubing

| Pressures | Tubing | Tubing/ 4.5" Annulus | Tubing/ 7" Annulus | Surface Casing | Other |
|---|---|---|---|---|---|
| Beginning Pressure | 250 psi | 900 psi | 2100 psi | 1800 psi | psi |
| Ending Pressure | psi | psi | psi | psi | psi |

| Time Log From | To | Hrs | |
|---|---|---|---|
| 6:00 | 7:00 | 1:00 | Travel to location |
| 7:00 | 15:30 | 8:30 | chained up trucks, stated into location road 1st steep grade Coil truck spun out, blocked road, called in grader operater |
| | | | Towed in equipment, coil tubing crew 4 trucks, weatherford hydraulic window, man lift, and valve service company |
| | | | while waiting on trucks to arrive at location serviced casing valve, freed up steam but threads on companion flage threads |
| 15:30 | 17:00 | 1:30 | are rusted out, pressure on 9 5/8 casing & 7" 1800#, 7" casing & 2.7/8" tubing 2100#, 2.7/8 tubing & 1.5" coil 900# |
| | | | 1.5" coil 250#, blew down tubing thru production tank, 8 minutes to bleed off, |
| | | | Spot in equipment & prep to rig up in the AM. |
| 17:00 | 18:30 | 1:30 | Travel back to town |
| | | | * roads in really bad shape, with melting and water run and last .25 mile to location had to help equipment down to loc. |
| | | | caused major delay's to get rigged up and started. |
| TOTAL HOURS: | | 12:30 | |

| Perforation Record | | | | | TUBING DESC. (Top to Bottom) | | | | | | | |
|---|---|---|---|---|---|---|---|---|---|---|---|---|
| | DEPTH | | PLUGS | | # Jts. | Desc. | Size | Grade | Thread | Weight | Length | Set @ |
| Formation | From | To | Frac Plug | CIBP | | | | | | | | |

IPT Integrated Petroleum Technologies, Inc.

# Daily Completion Report

| Date | Company | Well Name & Number | County | State | API Number | GL | KB |
|---|---|---|---|---|---|---|---|
| 2/3/15 | Enerquest Oil & Gas, LLC | Logan Federal #1 | Summit | UT | 43-043-30186 | 7489 | 7514 |

| Report Day | TVD | TMD | PBTD | QtrQtr Sec-Twp-Rge | Daily Cost | Cumulative Cost | AFE Amount |
|---|---|---|---|---|---|---|---|
| 5 | 13,492' | 13,492' | 12,822' | SENE Sec 26-T3N-R7E | $34,659 | $62,526 | |

Directions to Location: Travel SW on Yellow crk RD 16 miles turn south on Dirt road, 7 mile at pavement Gate on right, 7 miles to loa

Supervisor: Bo Stinson

Actual Operations Current 24 Hours: Check communication between casing, killed well & rigged up to pull coil

Proposed Operations Next 24 Hours: Finish nipple up stack, and pull test coil, release hanger and Pull coil out of 2 7/8 tubing

| Pressures | Tubing | Tubing/ 4.5" Annulus | Tubing/ 7" Annulus | Surface Casing | Other |
|---|---|---|---|---|---|
| Beginning Pressure | 250 psi | 400 psi | 2100 psi | 1800 psi | psi |
| Ending Pressure | 0 psi | 0 psi | 2200 psi | 2200 psi | psi |

| Time Log From | To | Hrs | |
|---|---|---|---|
| 6:00 | 7:00 | 1:00 | Travel to location |
| 7:00 | 8:00 | 1:00 | start up equipment, check well head pressures, rig up hard line to kill well down coil, Safety meeting with all personel |
| 8:00 | 11:00 | 3:00 | Bleed down tubing pressure, 3 minutes to bleed off, some fluid sluggs, weatherford changing out companion flage on |
| | | | casing valve, to bleed down pressure, & check communication between 9 5/8 & 7" casings, |
| 11:00 | 12:00 | 1:00 | Bleed off from 9 5/8 casing thru 16/64 choke, 30 minutes starting pressure @ 2200# on both CP ending pressure @ 7"1950 |
| | | | 9 5/8 @ 1900#, shut in at gate valve on well head, steam leaking on valve, |
| 12:00 | 13:00 | 1:00 | changed out hard line to tubing cross, Safty meeting, pressure test lines to 4000# |
| 13:00 | 16:00 | 3:00 | Pumped displacement of 101 bbls down coil monitor 2 7/8 tubing pressure after 22 bbls tubing pressure rising to 300# |
| | | | continued pumping displacement, coil pressure rising to 3100#, tubing to 1750#, SD ISIP @ Coil 2800#, tubing 1750# |
| | | | watched for 15 minutes, pressured dropped in coil 450#, Tubing 350#, opened up to return tank, coil flow back 2 bbls |
| | | | tubing gas bubble blew down in 3 minutes, no flow, watched 1 hr. per CTS safety rule |
| 16:00 | 16:30 | 0:30 | started breaking down flow lines, well started flowing up coil, SD and watched for flow to stop, 15 minute flow stopped |
| 16:30 | 18:30 | 2:00 | started breaking down flow lines, & start nipple up coil stack, set Hydraulic window, and coil bop, hooked up hydraulic |
| | | | hoses and funtion tested BOP, closed blind and shear rams as back up (swab valve leaking) |
| | | | SWIFN & SD |
| 18:30 | 19:30 | 1:00 | Travel back to town. |
| | | | * bullhead displacement with production water, pumped @ 1.5 bpm, pressure increased to 3100# @ 101 bbls into |
| | | | displacement, SD and monitored pressures, |
| | | | ISIP @ 2800 coil 2 7/8 tubing 1750# |
| | | | 5 min @ 450# coil 2 7/8 tubing 400# |
| | | | 10 min @ 450# coil 2 7/8 tubing 350# |
| | | | 15 min @ 450# coil 2 7/8 tubing 350# |
| | | | Bleed off coil with flow back of 2 bbls, opened up tubing bleed back gas then dead, watched well 1 hr per CTS safety rule |
| | | | * pressure increased on 2 7/8 tubing at 22 bbls into displacement, total displacment pumped @ 1.5 BPM, because of |
| | | | steady increase in pressure, pumped steady to 101 bbls pressure up to 3100# on coil, SD pump. |
| | | | Estamated fluid level @ 4000-4500' |
| | | | * Production water used to kill well, from tank battery, |
| TOTAL HOURS: | | 13:30 | |

| Perforation Record | | | | | TUBING DESC. (Top to Bottom) | | | | | | | |
|---|---|---|---|---|---|---|---|---|---|---|---|---|
| | DEPTH | | PLUGS | | # Jts. | Desc. | Size | Grade | Thread | Weight | Length | Set @ |
| Formation | From | To | Frac Plug | CIBP | coil | N2 string | 1.5" | ? | n/a | | 12710.00 | 12710.00 |
| Nugget ST | 12804 | 12820 | N/A | 12848 | ? | mixed STR. | 2.875 | L-80 | EUE | 6.5 | 12712.00 | 12710.00 |

IPT

Integrated Production Technologies, Inc.

# Daily Completion Report

| Date | Company | Well Name & Number | County | State | API Number | GL | KB |
|---|---|---|---|---|---|---|---|
| 2/4/15 | Enerquest Oil & Gas, LLC | Logan Federal #1 | Summit | UT | 43-043-30186 | 7489 | 7514 |

| Report Day | TVD | TMD | PBTD | QtrQtr Sec-Twp-Rge | Daily Cost | Cumulative Cost | AFE Amount |
|---|---|---|---|---|---|---|---|
| 6 | 13,492' | 13,492' | 12,822' | SENE Sec 26-T3N-R7E | $21,073 | $83,599 | |

Directions to Location: Travel SW on Yellow crk RD 16 miles turn south on Dirt road, 7 mile at pavement Gate on right, 7 miles to loa

Supervisor: Bo Stinson

Actual Operations Current 24 Hours: finish NUCTS, pull test fishing tools, POOH with 2680' of coil tubing.

Proposed Operations Next 24 Hours: fish coil with coil tubing unit, 1.25" coil if approved,

| Pressures | Tubing | Tubing/ 4.5" Annulus | Tubing/ 7" Annulus | Surface Casing | Other |
|---|---|---|---|---|---|
| Beginning Pressure | 0 psi | 0 psi | 2200 psi | 2200 psi | psi |
| Ending Pressure | 0 psi | 0 psi | 2200 psi | 2200 psi | psi |

| Time Log From | To | Hrs | |
|---|---|---|---|
| 6:00 | 7:00 | 1:00 | Travel to location, 2" snow and muddy roads, temp @ 32-33 degrees, |
| 7:00 | 8:00 | 1:00 | start up, check WHP , |
| 8:00 | 9:00 | 1:00 | continue NUCTS, |
| 9:00 | 10:00 | 1:00 | MU fishing tool on bait line, broke loose above coil hanger, latched on to 1.5" stump, made up flange above hanger |
| | | | Weatherford Fishing tool ( over shot OD 2.5", Motor head assembly 2 1/8, basket grapple series 20 short catch 1.375" ID) |
| | | | Tigh back injector assembly,prep to pull test tools, safety meeting with crew |
| 10:00 | 12:00 | 2:00 | pulled test tools to 15k pipe sliped up shut down 5k wieght on coil, pipe part @ 2019' estamated (1.5"coil@2.47 PPF 1.75) |
| | | | clamped off coil, released hanger, pins all seized up backed out with cheater pipes & wrenches, cut off fishing tool, |
| | | | Slight pitting at stump, (Pic taken), |
| 12:00 | 14:00 | 2:00 | dressed up coil top attached roller, cut off bait line, tied into valve bank (TIW), |
| 14:00 | 17:00 | 3:00 | hooked up line counter, POOH with 1.5" coil at 32-37 FPM, extremely pitted pulled at a slow rate to prevent coil from |
| | | | parting, POOH with a total of 2680' of coil. |
| 17:00 | 17:30 | 0:30 | rig down injector, shut well in for night, |
| 17:30 | 18:30 | 1:00 | Travel to town. |
| TOTAL HOURS: | | 12:30 | |

| Perforation Record | | | | | TUBING DESC. (Top to Bottom) | | | | | | | |
|---|---|---|---|---|---|---|---|---|---|---|---|---|
| | DEPTH | | PLUGS | | # Jts. | Desc. | Size | Grade | Thread | Weight | Length | Set @ |
| Formation | From | To | Frac Plug | CIBP | | | | | | | | |

IPT Integrated Petroleum Technologies, Inc.

# Daily Completion Report

| Date | Company | Well Name & Number | County | State | API Number | GL | KB |
|---|---|---|---|---|---|---|---|
| 2/5/15 | Enerquest Oil & Gas, LLC | Logan Federal #1 | Summit | UT | 43-043-30186 | 7489 | 7514 |

| Report Day | TVD | TMD | PBTD | QtrQtr Sec-Twp-Rge | Daily Cost | Cumulative Cost | AFE Amount |
|---|---|---|---|---|---|---|---|
| 7 | 13,492' | 13,492' | 12,822' | SENE Sec 26-T3N-R7E | $5,957 | $89,556 | |

Directions to Location: Travel SW on Yellow crk RD 16 miles turn south on Dirt road, 7 mile at pavement Gate on right, 7 miles to loa

Supervisor: Bo Stinson

Actual Operations Current 24 Hours: Pull in 1.25" coil tubing trailer to fish with, break down well head to rig up for 1.25 BOP and to run fishing tools

Proposed Operations Next 24 Hours: RIH with fishing tools to start fishing

| Pressures | Tubing | Tubing/ 4.5" Annulus | Tubing/ 7" Annulus | Surface Casing | Other |
|---|---|---|---|---|---|
| Beginning Pressure | 0 psi | 0 psi | 2200 psi | 2200 psi | psi |
| Ending Pressure | 0 psi | 0 psi | 2200 psi | 2200 psi | psi |

| Time Log From | To | Hrs | |
|---|---|---|---|
| 6:00 | 7:00 | 1:00 | Travel to location, |
| 7:00 | 9:00 | 2:00 | bring truck from location to meet Road truck and bring up 1.25" coil fishing trailer |
| 9:00 | 13:30 | 4:30 | NDBOPS, and strip off coil tubing hanger and swab valve, |
| 13:30 | 16:30 | 3:00 | NUWH cross to fish thru, MU hydraulic window, & 1.25" BOP, funtion test bop all operational |
| 16:30 | 17:30 | 1:00 | Travel back to town |
| TOTAL HOURS: | | 11:30 | |

| Perforation Record | | | | | TUBING DESC. (Top to Bottom) | | | | | | | |
|---|---|---|---|---|---|---|---|---|---|---|---|---|
| | DEPTH | | PLUGS | | # Jts. | Desc. | Size | Grade | Thread | Weight | Length | Set @ |
| Formation | From | To | Frac Plug | CIBP | | | | | | | | |

IPT Integrated Petroleum Technologies, Inc.

# Daily Completion Report

| Date | Company | Well Name & Number | County | State | API Number | GL | KB |
|---|---|---|---|---|---|---|---|
| 2/6/15 | Enerquest Oil & Gas, LLC | Logan Federal #1 | Summit | UT | 43-043-30186 | 7489 | 7514 |

| Report Day | TVD | TMD | PBTD | QtrQtr Sec-Twp-Rge | Daily Cost | Cumulative Cost | AFE Amount |
|---|---|---|---|---|---|---|---|
| 8 | 13,492' | 13,492' | 12,822' | SENE Sec 26-T3N-R7E | $41,654 | $150,539 | |

Directions to Location: Travel SW on Yellow crk RD 16 miles turn south on Dirt road, 7 mile at pavement Gate on right, 7 miles to loa

Supervisor: Bo Stinson

Actual Operations Current 24 Hours: RIH with overshot & motor caught 465' of fish, two more failed runs, blew down coil and shut down for night

Proposed Operations Next 24 Hours: RIH with concave mill 2.266 OD, dress up fish top, attempt to fish rest of 1.5" coil tubing

| Pressures | Tubing | Tubing/ 4.5" Annulus | Tubing/ 7" Annulus | Surface Casing | Other |
|---|---|---|---|---|---|
| Beginning Pressure | 0 psi | 0 psi | 2200 psi | 2200 psi | psi |
| Ending Pressure | psi | psi | psi | psi | psi |

| Time Log From | To | Hrs | |
|---|---|---|---|
| 6:00 | 7:00 | 1:00 | Traveled to location |
| 7:00 | 8:30 | 1:30 | MU fishing tools, fill coil with 2% KCL, pull tested tools to 25K, pressure tested tools to 2650#, NU injecter |
| 8:30 | 11:00 | 2:30 | RIH @ 55 FPM pumped 1/2 bbls every thousand feet, slowed @ 2400', tagged fish top set down 3k, picked up on fish |
| | | | Wiegth pulled up to 17K, fish parted, attempt to set down twice more, no more over pull TOOH with 1000#'s of fish |
| 11:00 | 13:30 | 2:30 | ND injector, and started pulling fish out cutting off in 55-57' pieces using crane, holes in some of the fish brought out. |
| | | | brittle and breaking off, redress fishing tools, prep to RIH again |
| 13:30 | 15:30 | 2:00 | Rih tagged fish top @ 3180' set down 3k, pick up no over pull, kicked in motor with .25 BPM set down again, no change |
| | | | set down 4K, with same results, POOH to check tools and if small fish broke off in overshot |
| 15:30 | 16:00 | 0:30 | Checked guide, some scaring, no parts stuck in tool, grapple in tack, |
| 16:00 | 17:00 | 1:00 | TIH with same tools, worked motor to get over fish top @ .25 & .50 bpm worked wieghts, but no over pull after 4 attempts |
| | | | 2nd attempt set down on fish top, slipped over fish gained 2k, picked up and slid off,no overpull, POOH to check tools, |
| 17:00 | 17:30 | 0:30 | checked overshot, scaring on guide shoe, discussed bringing undersize grapple to run after we dress up fish top with |
| | | | Weatherford tool hand. |
| 17:30 | 18:30 | 1:00 | Blew down coil with N2, to prevent Ice blockage in coil over night, ND injector, Boom down crane, SWIFN & SD |
| 18:30 | 19:30 | 1:00 | Travel to town |
| | | | * fish retrieve 465', holes thru out fish, |
| TOTAL HOURS: | | 13:30 | |

| Perforation Record | | | | | TUBING DESC. (Top to Bottom) | | | | | | | |
|---|---|---|---|---|---|---|---|---|---|---|---|---|
| | DEPTH | | PLUGS | | # Jts. | Desc. | Size | Grade | Thread | Weight | Length | Set @ |
| Formation | From | To | Frac Plug | CIBP | | | | | | | | |

IPT Integrated Production Technologies, Inc.

# Daily Completion Report

| Date | Company | Well Name & Number | County | State | API Number | GL | KB |
|---|---|---|---|---|---|---|---|
| 2/7/15 | Enerquest Oil & Gas, LLC | Logan Federal #1 | Summit | UT | 43-043-30186 | 7489 | 7514 |

| Report Day | TVD | TMD | PBTD | QtrQtr Sec-Twp-Rge | Daily Cost | Cumulative Cost | AFE Amount |
|---|---|---|---|---|---|---|---|
| 9 | 13,492' | 13,492' | 12,822' | SENE Sec 26-T3N-R7E | $51,481 | $202,020 | |

Directions to Location: Travel SW on Yellow crk RD 16 miles turn south on Dirt road, 7 mile at pavement Gate on right, 7 miles to loa

Supervisor: Bo Stinson

Actual Operations Current 24 Hours: Attempt to dress up fish top with concave mill, RIH with grapple could not get over fish, POOH, RD and released services

Proposed Operations Next 24 Hours: Replumb well to sell gas off casing valve

| Pressures | Tubing | Tubing/ 4.5" Annulus | Tubing/ 7" Annulus | Surface Casing | Other |
|---|---|---|---|---|---|
| Beginning Pressure | 0 psi | 0 psi | 2200 psi | 2200 psi | psi |
| Ending Pressure | 0 psi | 0 psi | 2200 psi | 2200 psi | psi |

| Time Log From | To | Hrs | |
|---|---|---|---|
| 6:00 | 7:00 | 1:00 | Travel to location |
| 7:00 | 8:00 | 1:00 | RD injector, cut off 60' of coil as per CTS, refill coil with 2% Kcl, reconnect fishing tools, Pull test to 20K, PT to 2500 |
| 8:00 | 9:30 | 1:30 | NU injector, RIH to tag fish, filling hole while RIH |
| 9:30 | 11:30 | 2:00 | hole circulation @ 36 bbls, tagged fish top @ 3180', started milling worked wieghts and torque with motor, 2 hrs. |
| | | | smooth up no torque, POOH, checked mill cut right on scareded tip on blde broken, |
| 11:30 | 12:00 | 0:30 | TOOH |
| 12:00 | 12:30 | 0:30 | picked up over shot, and cut lip guide shoe, with spirale 1.5" grapple |
| 12:30 | 13:30 | 1:00 | RIH, pump 1/2 bbls every 1000', tagged fish top, |
| 13:30 | 15:30 | 2:00 | worked tools to get on fish, turned with motor to latch, set down multiple wieghts, and tried to turn on fish with up to 3/4 |
| | | | BPM to catch fish top, no over pull, POOH to check tools, Fish not getting past guide shoe, |
| | | | Contacted Matt Mollman, informed him of the results of to day, Matt's opinion was to release services, and come back |
| | | | after spring thaw and bring in work over rig to complete task. |
| 15:30 | 16:30 | 1:00 | Released all services, blew down coil to flow back tank, ND stack, load out flow back iron, |
| 16:30 | 19:30 | 3:00 | move all equipment off location, both coil units needed pull up steep grade to get out. |
| 19:30 | 20:30 | 1:00 | Travel back to town |
| | | | * I will contact Cameron to meet service tech and get them to bring out parts to NUWH and tie in casing to sales line. |
| TOTAL HOURS: | | 14:30 | |

| Perforation Record | | | | | TUBING DESC. (Top to Bottom) | | | | | | | |
|---|---|---|---|---|---|---|---|---|---|---|---|---|
| | DEPTH | | PLUGS | | # Jts. | Desc. | Size | Grade | Thread | Weight | Length | Set @ |
| Formation | From | To | Frac Plug | CIBP | | | | | | | | |

**FEDERAL APPROVAL OF THIS ACTION IS NECESSARY**

FORM 9

# STATE OF UTAH
DEPARTMENT OF NATURAL RESOURCES
DIVISION OF OIL, GAS, AND MINING

**5.LEASE DESIGNATION AND SERIAL NUMBER:** U-47812

## SUNDRY NOTICES AND REPORTS ON WELLS

Do not use this form for proposals to drill new wells, significantly deepen existing wells below current bottom-hole depth, reenter plugged wells, or to drill horizontal laterals. Use APPLICATION FOR PERMIT TO DRILL form for such proposals.

**6. IF INDIAN, ALLOTTEE OR TRIBE NAME:**

**7.UNIT or CA AGREEMENT NAME:**

**1. TYPE OF WELL**
Oil Well

**8. WELL NAME and NUMBER:** LOGAN FED 1

**2. NAME OF OPERATOR:**
ENERQUEST OPERATING, LLC

**9. API NUMBER:** 43043301860000

**3. ADDRESS OF OPERATOR:**
12368 Market Drive , Oklahoma City, OK, 73114

**PHONE NUMBER:** 405 478-3300 Ext

**9. FIELD and POOL or WILDCAT:** NORTH PINEVIEW

**4. LOCATION OF WELL**
**FOOTAGES AT SURFACE:**
1659 FNL 0689 FEL
**QTR/QTR, SECTION, TOWNSHIP, RANGE, MERIDIAN:**
Qtr/Qtr: SENE Section: 26 Township: 03.0N Range: 07.0E Meridian: S

**COUNTY:** SUMMIT

**STATE:** UTAH

**11.**
CHECK APPROPRIATE BOXES TO INDICATE NATURE OF NOTICE, REPORT, OR OTHER DATA

| TYPE OF SUBMISSION | TYPE OF ACTION | | |
|---|---|---|---|
| ✓ NOTICE OF INTENT<br>Approximate date work will start:<br>6/8/2015 | ☐ ACIDIZE | ☐ ALTER CASING | ☐ CASING REPAIR |
| | ☐ CHANGE TO PREVIOUS PLANS | ☐ CHANGE TUBING | ☐ CHANGE WELL NAME |
| | ☐ CHANGE WELL STATUS | ☐ COMMINGLE PRODUCING FORMATIONS | ☐ CONVERT WELL TYPE |
| ☐ SUBSEQUENT REPORT<br>Date of Work Completion: | ☐ DEEPEN | ☐ FRACTURE TREAT | ☐ NEW CONSTRUCTION |
| | ☐ OPERATOR CHANGE | ☐ PLUG AND ABANDON | ☐ PLUG BACK |
| | ☐ PRODUCTION START OR RESUME | ☐ RECLAMATION OF WELL SITE | ☐ RECOMPLETE DIFFERENT FORMATION |
| ☐ SPUD REPORT<br>Date of Spud: | ☐ REPERFORATE CURRENT FORMATION | ☐ SIDETRACK TO REPAIR WELL | ☐ TEMPORARY ABANDON |
| | ☐ TUBING REPAIR | ☐ VENT OR FLARE | ☐ WATER DISPOSAL |
| ☐ DRILLING REPORT<br>Report Date: | ☐ WATER SHUTOFF | ☐ SI TA STATUS EXTENSION | ☐ APD EXTENSION |
| | ☐ WILDCAT WELL DETERMINATION | ✓ OTHER | OTHER: Pull coil tubing. |

**12. DESCRIBE PROPOSED OR COMPLETED OPERATIONS. Clearly show all pertinent details including dates, depths, volumes, etc.**

Remove 1 ½" coil tubing velocity string from wellbore. Procedure will require pulling the 2 7/8" tubing and packer. Inspect, repair, return all tubing to well and otherwise return the well to production. Operations will commence as soon as equipment and crew is available and weather will permit operations.

**Accepted by the Utah Division of Oil, Gas and Mining**

**Date:** June 04, 2015

**By:** Dark K Quist

| NAME (PLEASE PRINT) | PHONE NUMBER | TITLE |
|---|---|---|
| Charles M Burkhardt | 405 478-3300 | Senior Engineering Tech |

| SIGNATURE | DATE |
|---|---|
| N/A | 5/29/2015 |

RECEIVED: May. 29, 2015

**STATE OF UTAH**
DEPARTMENT OF NATURAL RESOURCES
DIVISION OF OIL, GAS, AND MINING

FORM 9

**5.LEASE DESIGNATION AND SERIAL NUMBER:** U-47812

## SUNDRY NOTICES AND REPORTS ON WELLS

Do not use this form for proposals to drill new wells, significantly deepen existing wells below current bottom-hole depth, reenter plugged wells, or to drill horizontal laterals. Use APPLICATION FOR PERMIT TO DRILL form for such proposals.

**6. IF INDIAN, ALLOTTEE OR TRIBE NAME:**

**7.UNIT or CA AGREEMENT NAME:**

**1. TYPE OF WELL**
Oil Well

**8. WELL NAME and NUMBER:** LOGAN FED 1

**2. NAME OF OPERATOR:**
ENERQUEST OPERATING, LLC

**9. API NUMBER:** 43043301860000

**3. ADDRESS OF OPERATOR:**
12368 Market Drive , Oklahoma City, OK, 73114

**PHONE NUMBER:** 405 478-3300 Ext

**9. FIELD and POOL or WILDCAT:** NORTH PINEVIEW

**4. LOCATION OF WELL**
**FOOTAGES AT SURFACE:**
1659 FNL 0689 FEL
**QTR/QTR, SECTION, TOWNSHIP, RANGE, MERIDIAN:**
Qtr/Qtr: SENE Section: 26 Township: 03.0N Range: 07.0E Meridian: S

**COUNTY:** SUMMIT

**STATE:** UTAH

**11.**
CHECK APPROPRIATE BOXES TO INDICATE NATURE OF NOTICE, REPORT, OR OTHER DATA

**TYPE OF SUBMISSION**

- ☐ NOTICE OF INTENT
  Approximate date work will start:
- ✓ SUBSEQUENT REPORT
  Date of Work Completion: 8/29/2015
- ☐ SPUD REPORT
  Date of Spud:
- ☐ DRILLING REPORT
  Report Date:

**TYPE OF ACTION**

| | | |
|---|---|---|
| ☐ ACIDIZE | ☐ ALTER CASING | ☐ CASING REPAIR |
| ☐ CHANGE TO PREVIOUS PLANS | ☐ CHANGE TUBING | ☐ CHANGE WELL NAME |
| ☐ CHANGE WELL STATUS | ☐ COMMINGLE PRODUCING FORMATIONS | ☐ CONVERT WELL TYPE |
| ☐ DEEPEN | ☐ FRACTURE TREAT | ☐ NEW CONSTRUCTION |
| ☐ OPERATOR CHANGE | ☐ PLUG AND ABANDON | ☐ PLUG BACK |
| ☐ PRODUCTION START OR RESUME | ☐ RECLAMATION OF WELL SITE | ☐ RECOMPLETE DIFFERENT FORMATION |
| ☐ REPERFORATE CURRENT FORMATION | ☐ SIDETRACK TO REPAIR WELL | ☐ TEMPORARY ABANDON |
| ☐ TUBING REPAIR | ☐ VENT OR FLARE | ☐ WATER DISPOSAL |
| ☐ WATER SHUTOFF | ☐ SI TA STATUS EXTENSION | ☐ APD EXTENSION |
| ☐ WILDCAT WELL DETERMINATION | ✓ OTHER | OTHER: Pull coil tubing. |

**12. DESCRIBE PROPOSED OR COMPLETED OPERATIONS. Clearly show all pertinent details including dates, depths, volumes, etc.**

6/24/15 Moved in rig and prepared location. Pulled 2 7/8" tubing in order to recover coiled tubing(1 ½"). Ran new 2 3/8" tubing string back in hole, end of tubing @ 12,675' KB. Set Baker packer @12,653' KB. Returned well to production. 8/29/15 Cleaned up and restored location

**Accepted by the Utah Division of Oil, Gas and Mining**
**FOR RECORD ONLY**
September 30, 2015

| NAME (PLEASE PRINT) | PHONE NUMBER | TITLE |
|---|---|---|
| Charles M Burkhardt | 405 478-3300 | Senior Engineering Tech |

| SIGNATURE | DATE |
|---|---|
| N/A | 9/29/2015 |

RECEIVED: Sep. 29, 2015

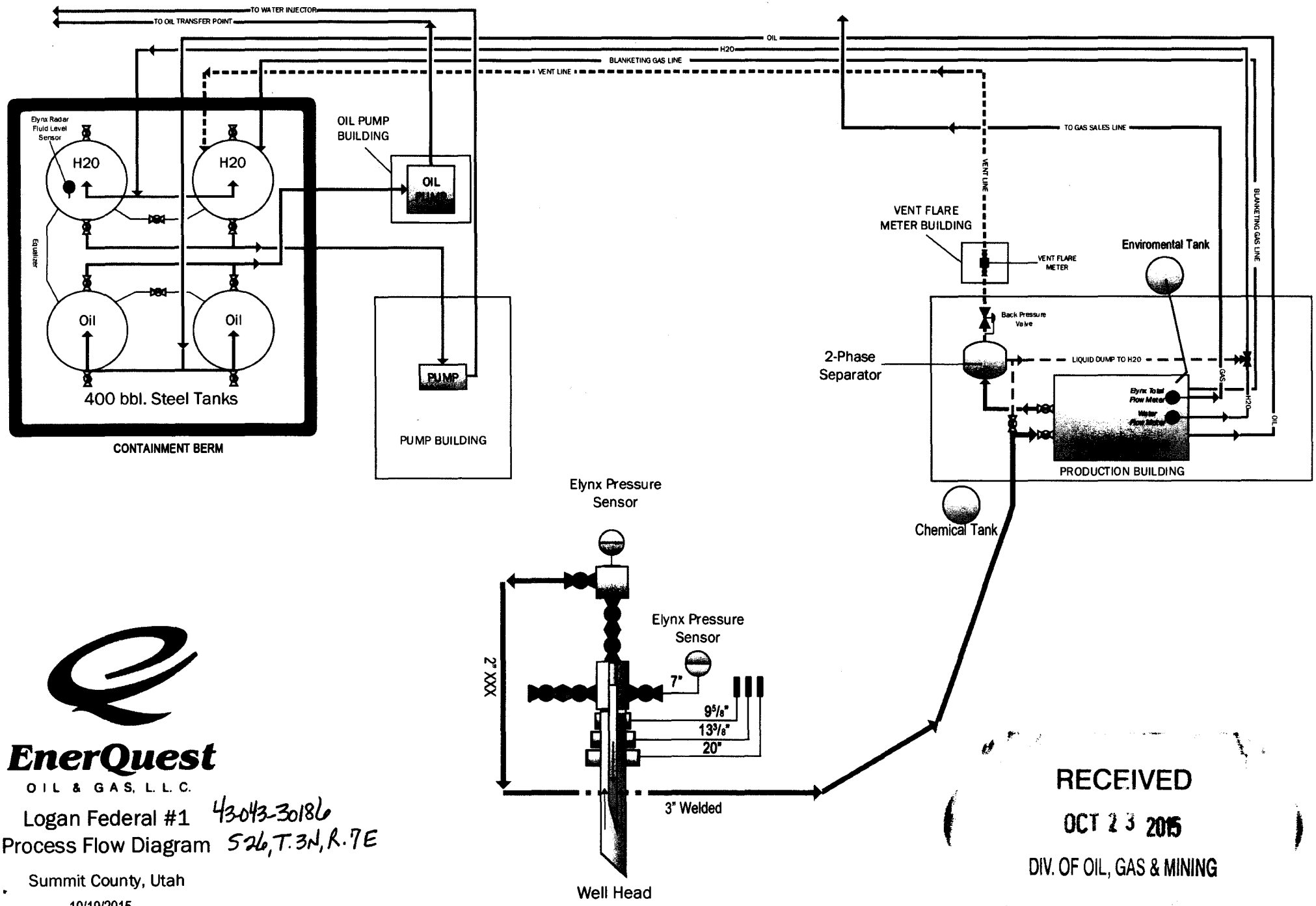


EnerQuest
OIL & GAS, L.L.C.

Logan Federal #1 43-043-30186
Process Flow Diagram S26, T.3N, R.7E

Summit County, Utah

10/19/2015

By: Kevin Johns

RECEIVED
OCT 23 2015
DIV. OF OIL, GAS & MINING

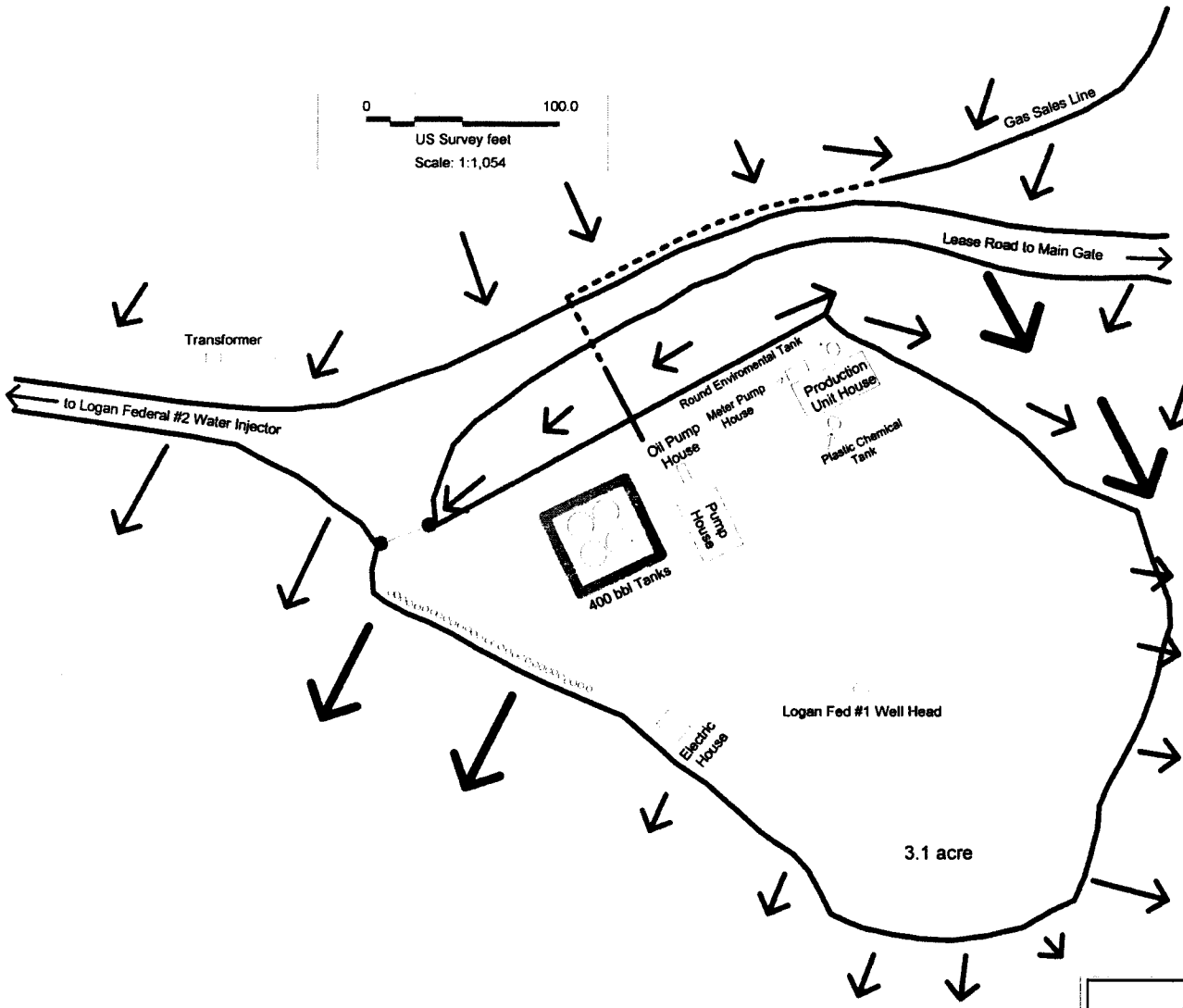


RECEIVED
OCT 14 2015
DIV. OF OIL, GAS & MINING

EnerQuest
OIL & GAS, L.L.C.

Logan Federal #1

North Pineview Field
Summit County, UT

Author : Kevin Johns
Date: 11/17/2013

Scale:

**Lisha Cordova <lishacordova@utah.gov>**

# After New Construction.pdf - Adobe Acrobat Standard

1 message

**Charles Burkhardt** <C.Burkhardt@enerquest.net> Wed, Oct 14, 2015 at 12:37 PM
To: "lishacordova@utah.gov" <lishacordova@utah.gov>

This is after the new tanks were installed. I don't think anything has changed.

Charles M. Burkhardt

EnerQuest Oil & Gas, L.L.C.

12368 Market Drive

Oklahoma City, OK 73114

Phone: (405) 478-3300 ext.-104

Fax: (405) 478-3686

mailto: c.burkhardt@enerquest.net

**After New Construction.pdf**
541K

ENERQUEST OIL & GAS, L.L.C.
LOGAN FEDERAL #1 43-043-30186
NORTH PINEVIEW FIELD
SUMMIT COUNTY, UT
KB 7520'
(26' ABOVE GROUND LEVEL)
SPUD: DEC 20 1981

S26, T.3N, R.7E
(SENE)

RECEIVED
OCT 09 2015
DIV. OF OIL, GAS & MINING

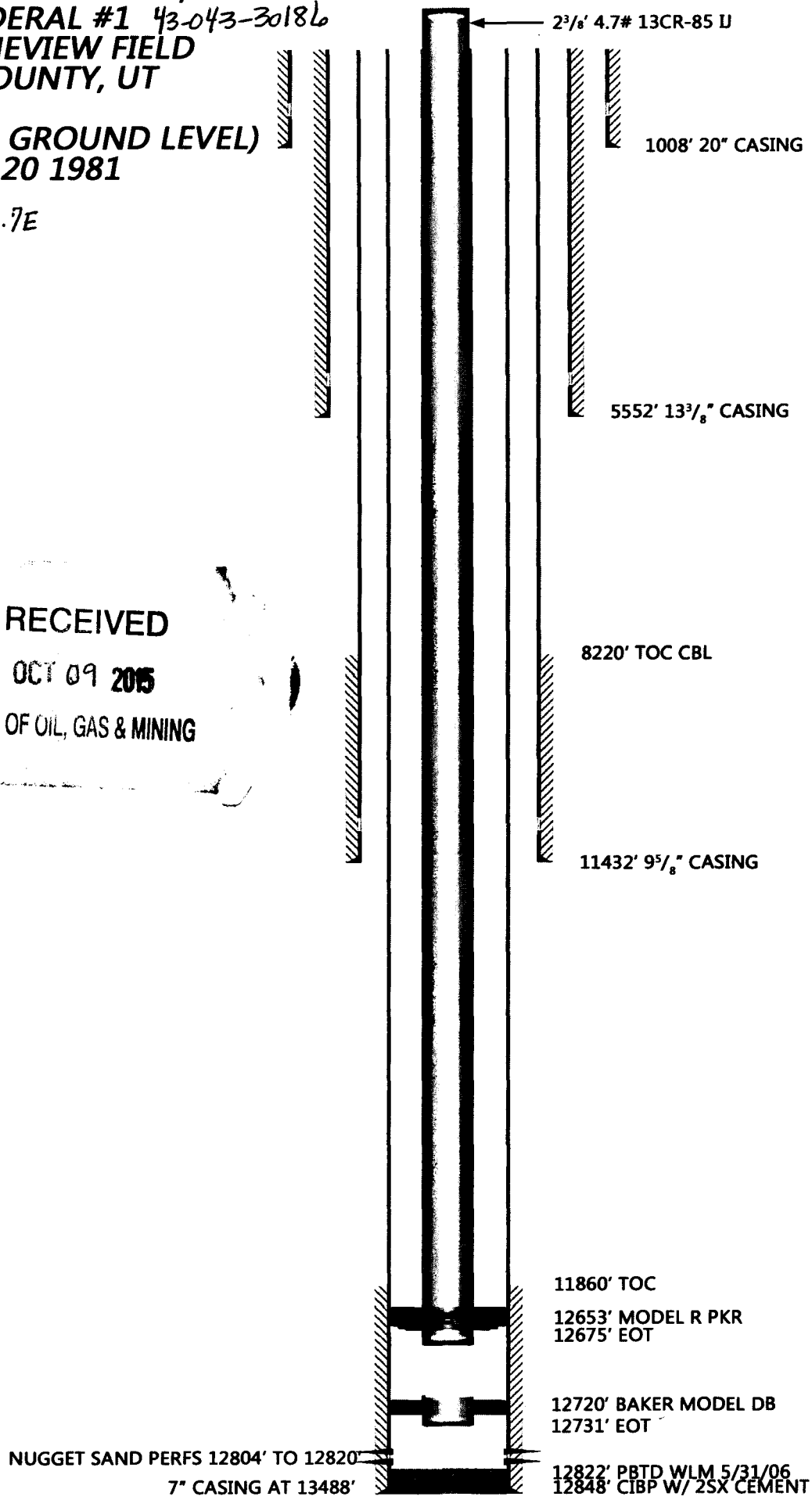


NOT TO SCALE

**Lisha Cordova <lishacordova@utah.gov>**

# LOGAN FEDERAL #1 WELLBORE DIAGRAM.pdf - Adobe Acrobat Standard

1 message

**Charles Burkhardt** <C.Burkhardt@enerquest.net> Fri, Oct 9, 2015 at 2:01 PM
To: "lishacordova@utah.gov" <lishacordova@utah.gov>

Lisha

Will this work? It was nice talking to you again.

Charles M. Burkhardt

EnerQuest Oil & Gas, L.L.C.

12368 Market Drive

Oklahoma City, OK 73114

Phone: (405) 478-3300 ext.-104

Fax: (405) 478-3686

mailto: c.burkhardt@enerquest.net

**LOGAN FEDERAL #1 WELLBORE DIAGRAM.pdf**
3533K