THE ANSCHUTZ CORPORATION

2400 ANACONDA TOWER · 555 SEVENTEENTH STREET · DENVER, COLORADO 80202 · 303-825-6100 · TWX 910-931-2620

December 16, 1980

Mr. Cleon B. Feight
Division of Oil, Gas & Mining
1588 West North Temple
Salt Lake City, Utah 84116

Re: Anschutz Ranch East No. 6-20U
NW 1/4 Sec. 20 T4N R8E
Summit County, Utah

Dear Jack,

Enclosed please find our application for permit to drill the above referenced location along with the required surveyor plat submitted in triplicate. I trust that if there are any difficulties or questions you shall feel free to call us.

Sincerely,

Peter B. Doty
Operations Coordinator

PBD:racd
Enc.

RECEIVED
DEC 1 9 1980
DIVISION OF
OIL, GAS & MINING

Form OGC-1a

SUBMIT IN TRIPLICATE*
(Other instructions on reverse side)

STATE OF UTAH
DEPARTMENT OF NATURAL RESOURCES
DIVISION OF OIL, GAS, AND MINING

APPLICATION FOR PERMIT TO DRILL, DEEPEN, OR PLUG BACK

1a. Type of Work: DRILL [X] DEEPEN [ ] PLUG BACK [ ]

b. Type of Well: Oil Well [X] Gas Well [ ] Other Single Zone [ ] Multiple Zone [ ]

2. Name of Operator: The Anschutz Corporation

3. Address of Operator: 2400 Anaconda Tower, 555 17th Street, Denver, Colorado 80202

4. Location of Well (Report location clearly and in accordance with any State requirements.*)
At surface: 1290 FNL and 936 FWL (NWNW)
At proposed prod. zone: Pursuant to applicable spacing order

5. Lease Designation and Serial No.: FEE

6. If Indian, Allottee or Tribe Name:

7. Unit Agreement Name:

8. Farm or Lease Name: Anschutz Ranch East

9. Well No.: 6-20U

10. Field and Pool, or Wildcat: Anschutz Ranch East

11. Sec., T., R., M., or Blk. and Survey or Area: Sec. 20 T4N R8E

12. County or Parrish: Summit 13. State: Utah

14. Distance in miles and direction from nearest town or post office*: 15 miles south southwest of Evanston, Wyoming,

15. Distance from proposed* location to nearest property or lease line, ft. (Also to nearest drlg. line, if any): 936

16. No. of acres in lease: 640

17. No. of acres assigned to this well: 160

18. Distance from proposed location* to nearest well, drilling, completed, or applied for, on this lease, ft.: 1518

19. Proposed depth: 14,100 Nugget

20. Rotary or cable tools: Rotary

21. Elevations (Show whether DF, RT, GR, etc.): 7534 GR ungraded 7550 KB EST

22. Approx. date work will start*: 1-1-81

23. PROPOSED CASING AND CEMENTING PROGRAM

Size of Hole	Size of Casing	Weight per Foot	Setting Depth	Quantity of Cement
26	20	94	100	Redi Mix
17 1/2	13 3/8	48	2500	To Surface
12 1/4	9 5/8	36	11,800	1500 sx
8 1/2	5 1/2 - 7	17-20	T.D.	from caliper

This well will be drilled to an approximate total depth of 14,100 feet to test the Nugget formation. Mud and BOP programs will be those generally used in the area. Electric logs will be run to T.D. Drill stem tests will be run as warranted. No cores are planned. If production is obtained, casing will be run through the productive intervals and selectively perforated. Frac'ing or acidizing may be required to stimulate production. Blanket bond is on file. Survey plats are attached.

APPROVED BY THE DIVISION OF OIL, GAS, AND MINING
DATE: 1/5/81
BY: C B Feight

IN ABOVE SPACE DESCRIBE PROPOSED PROGRAM: If proposal is to deepen or plug back, give data on present productive zone and proposed new productive zone. If proposal is to drill or deepen directionally, give pertinent data on subsurface locations and measured and true vertical depths. Give blowout preventer program, if any.

24.

Signed: Peter B. Doty Title: Operations Coordinator Date: 12-16-80

(This space for Federal or State office use)

Permit No. ..... Approval Date .....

Approved by ..... Title ..... Date .....
Conditions of approval, if any:

*See Instructions On Reverse Side

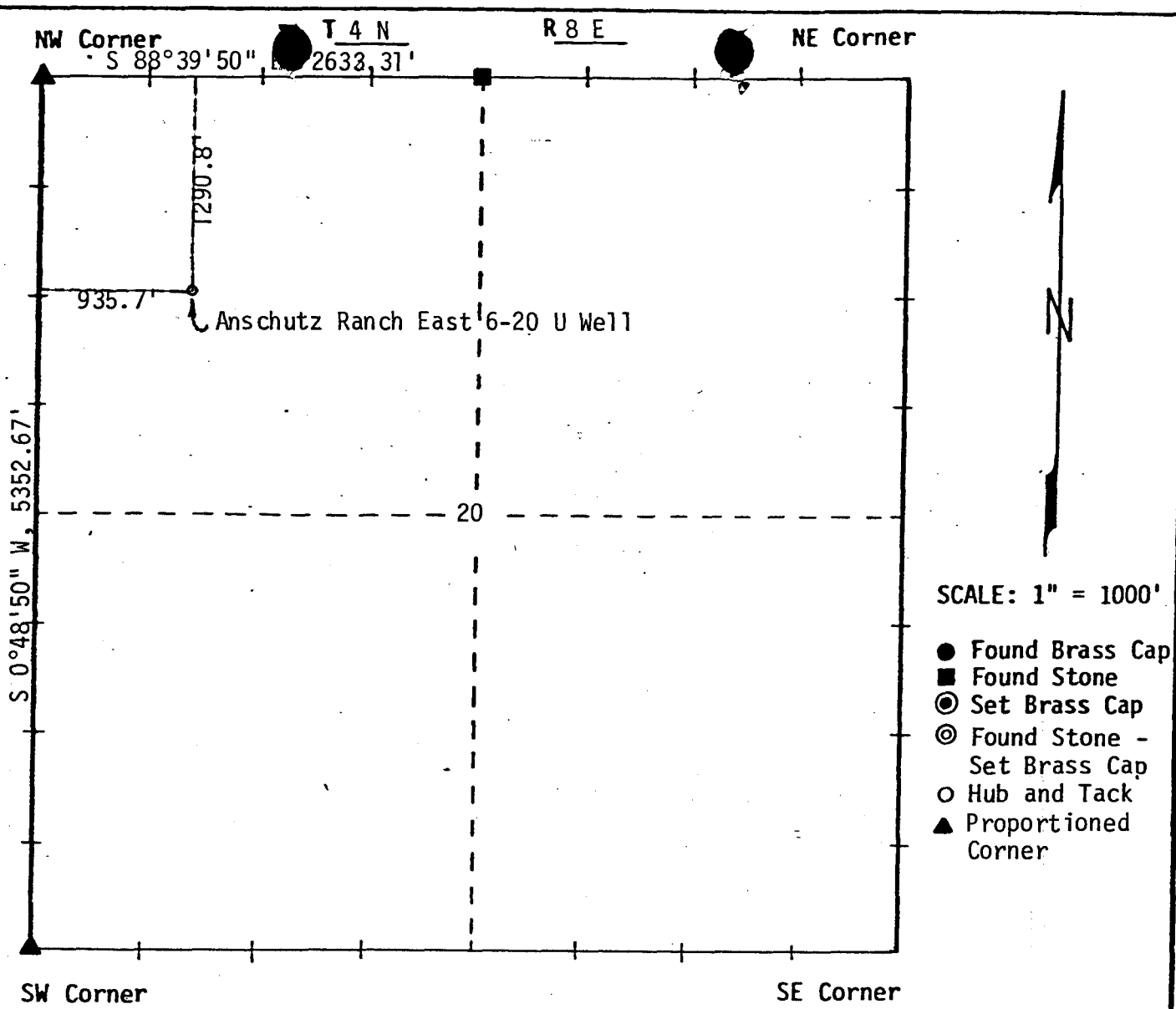

I, John A. Proffit of Evanston, Wyoming certify that in accordance with a request from Pete Doty of Denver, Colorado for The Anschutz Corporation I made a survey on the 29th day of October, 19 80 for Location and Elevation of the Anschutz Ranch East 6-20 U Well as shown on the above map, the wellsite is in the NW¼ of Section 20, Township 4 N, Range 8 E of the Salt Lake Base & Meridian, Summit County, State of Utah, Elevation is 7534 Feet top of hub Datum U.S.G.S. Quadrangle - Porcupine Ridge, Utah/Wyo. BM #15 EAM 1965 Elev. 7122 At Yellow Creek Road

Reference point

Reference point

Reference point

Reference point

NOTE: These distances and bearings are dependent upon the acceptance of our method of proportionately reseting lost section corners by the Utah BLM Cadastral Surveyor.

John A. Proffit 12/11/80

JOHN A. PROFFIT UTAH R.L.S. NO. 2860

DATE: 12-11-80
JOB NO.: 80-20-10

UINTA ENGINEERING & SURVEYING, INC.
808 MAIN STREET, EVANSTON, WYOMING

** FILE NOTATIONS **

DATE: January 2, 1981

OPERATOR: Anschutz Corporation

WELL NO: Anschutz Ranch East 6-20U

Location: Sec. 20 T. 4N R. 8E County: Summit

File Prepared: ☐ Entered on N.I.D: ☐

Card Indexed: ☐ Completion Sheet: ☐

API Number 43-043-30159

CHECKED BY:

Petroleum Engineer: M.J. Minder

Director: OK as per order issued in Cause 183-2

Administrative Aide: Order # 183-2

APPROVAL LETTER:

Bond Required: ☑ Survey Plat Required: ☐

Order No. 183-2, 4/10/80 O.K. Rule C-3 ☐

Rule C-3(c), Topographic Exception - company owns or controls acreage within a 660' radius of proposed site ☐

Lease Designation Fee (private) Plotted on Map ☑

Approval Letter Written ☑

Hot Line ☑ P.I. ☑

January 9, 1981

The Anschutz Corporation
2400 Anaconda Tower,
555 17th Street
Denver, Colorado 80202

Re: Well No. Anschutz Ranch East 6-20U
Sec. 20, T. 4N, R. 8E
Summit County, Utah

Insofar as this office is concerned, approval to drill the above referred to oil well is hereby granted in accordance with the Order issued in Cause No. 183-2, dated April,10, 1980.

Should you determine that it will be necessary to plug and abandon this well, you are hereby requested to immediately notify the following:

MICHAEL T. MINDER - Petroleum Engineer
Office: 533-5771
Home: 876-3001

Enclosed please find Form OGC-8-X, which is to be completed whether or not water sands (Acquifers) are encountered during drilling. Your cooperation in completing this form will be appreciated.

Further, it is requested that this Division be notified within 24 hours after drilling operations commence, and that the drilling contractor and rig number be identified.

The API number assigned to this well is 43-043-30159.

Sincerely,

DIVISION OF OIL, GAS, AND MINING

Cleon B. Feight
Director

/ko
cc:

STATE OF UTAH
NATURAL RESOURCES & ENERGY
Oil, Gas & Mining

Scott M. Matheson, Governor
Temple A. Reynolds, Executive Director
Cleon B. Feight, Division Director

4241 State Office Building • Salt Lake City, UT 84114 • 801-533-5771

December 16, 1981

Anschutz Corporation
555 17th Street, Suite 2400
Denver, Colorado 80202

Re: See attached

Gentlemen:

In reference to the above mentioned wells, considerable time has gone by since approval was obtained from this office.

This office has not received any notification of spudding. If you do not intend to drill these wells, please notify this Division. If spudding or any other activity has taken place, please send necessary forms. If you plan to drill this location at a later date, please notify as such.

Your prompt attention to the above will be greatly appreciated.

Very truly yours,

DIVISION OF OIL, GAS AND MINING

Cari Furse

CARI FURSE
CLERK TYPIST

Board/Charles R. Henderson, Chairman • John L. Bell • E. Steele McIntyre • Edward T. Beck
Robert R. Norman • Margaret R. Bird • Herm Olsen

an equal opportunity employer • please recycle paper

Well No. Antelope Island # 9-17
Sec. 17, T. 3N, R. 3W
DAVIS COUNTY, UTAH

Well No. Anschutz Ranch East 6-20U
Sec. 20, T. 4N, R. 8E
Summit County, Utah

Well No. Anschutz Ranch East 8-30U
Sec. 30, T. 4N, R. 8E
Summit County, Utah

Well No. Anschutz Ranch East 16-30U
Sec. 30, T. 4N, R. 8E
Summit County, Utah

Form OGCC-1 b

STATE OF UTAH

OIL & GAS CONSERVATION COMMISSION

SUBMIT IN TRIPLICATE*
(Other instructions on reverse side)

SUNDRY NOTICES AND REPORTS ON WELLS

(Do not use this form for proposals to drill or to deepen or plug back to a different reservoir. Use "APPLICATION FOR PERMIT—" for such proposals.)

1. OIL WELL [X] GAS WELL [ ] OTHER

2. NAME OF OPERATOR: The Anschutz Corporation

3. ADDRESS OF OPERATOR: 2400 Anaconda Tower, 555-17th St., Denver, CO 80202

4. LOCATION OF WELL (Report location clearly and in accordance with any State requirements.* See also space 17 below.) At surface

5. LEASE DESIGNATION AND SERIAL NO.: Fee

6. IF INDIAN, ALLOTTEE OR TRIBE NAME:

7. UNIT AGREEMENT NAME:

8. FARM OR LEASE NAME: Anschutz Ranch East

9. WELL NO.: 6-20U

10. FIELD AND POOL, OR WILDCAT: Anschutz Ranch East

11. SEC., T., R., M., OR BLK. AND SURVEY OR AREA: Section 20, T4N-R8E

12. COUNTY OR PARISH: Summit

13. STATE: Utah

14. PERMIT NO.:

15. ELEVATIONS (Show whether DF, RT, GR, etc.): 7350' KB

16. **Check Appropriate Box To Indicate Nature of Notice, Report, or Other Data**

NOTICE OF INTENTION TO:				SUBSEQUENT REPORT OF:			
TEST WATER SHUT-OFF	[ ]	PULL OR ALTER CASING	[ ]	WATER SHUT-OFF	[ ]	REPAIRING WELL	[ ]
FRACTURE TREAT	[ ]	MULTIPLE COMPLETE	[ ]	FRACTURE TREATMENT	[ ]	ALTERING CASING	[ ]
SHOOT OR ACIDIZE	[ ]	ABANDON*	[ ]	SHOOTING OR ACIDIZING	[ ]	ABANDONMENT*	[ ]
REPAIR WELL	[ ]	CHANGE PLANS	[ ]	(Other) Report on Well			[X]
(Other)			[ ]	(NOTE: Report results of multiple completion on Well Completion or Recompletion Report and Log form.)			

17. DESCRIBE PROPOSED OR COMPLETED OPERATIONS (Clearly state all pertinent details, and give pertinent dates, including estimated date of starting any proposed work. If well is directionally drilled, give subsurface locations and measured and true vertical depths for all markers and zones pertinent to this work.)*

Spud 0500 hrs. 5/19/81.
Ran 13-3/8" csg. to 5413'.
Logged with Schlumberger @ 11,080'.
Ran 9-5/8" csg. to 11,330'.
Cut cores from 12,996-13,707'.
Plug back to 13,273' from 13,548'.
Cut cores from 13,700-14,048'.
Ran logs with Schlumberger @ 14,163'.
Ran 7" csg. to 14,163'.
Rig released @ 1800 hrs. 12/30/81.

18. I hereby certify that the foregoing is true and correct

SIGNED David Kingston TITLE _____ DATE 2/8/82

(This space for Federal or State office use)

APPROVED BY _____ TITLE _____ DATE _____

CONDITIONS OF APPROVAL, IF ANY:

*See Instructions on Reverse Side

TERRA TEK CORE SERVICES

360 Wakara Way, Salt Lake City, Utah 84108 (801) 584-2480

ANSCHUTZ CORPORATION

Well:	ARE #6-20U	State:	Utah	Date:	12 Mar 1982
Field:	Anschutz Ranch East	County:	Summit	TTCS File #:	91
Drilling Fluid:	Water Base	Location:	Sec. 20 T4N R8E	Elevation:	N/A

DEAN-STARK FULL DIAMETER ANALYSIS

Sample Number	Depth (feet)	Permeability Horz (md)	Horz-90° (md)	Vert (md)	Porosity (%)	Saturation Oil (%)	H2O (%)	Grain Density (gm/cc)	Lithology	
NUGGET FORMATION										
1	12996.0-97.0	0.04	0.03	0.02	4.5	11.5	37.2	2.64	Sd,fg,lam,sl/calc	vf
2	12997.0-98.0	0.04	0.03	0.03	5.4	11.7	30.0	2.64	Sd,fg,lam,sl/calc	
3	12998.0-99.0	0.08	*	0.08	7.2	22.4	21.0	2.64	Sd,fg,lam,sl/calc	vf
4	12999.0-00.0	696	0.03	11697	5.4	24.6	21.1	2.64	Sd,fg,lam,sl/calc	vf
5	13000.0-01.0	1873	0.05	4025	5.0	24.2	21.7	2.65	Sd,fg,lam,sl/calc	vf
6	13001.0-02.0	0.02	*	0.05	4.1	16.2	25.7	2.64	Sd,fg,lam,sl/calc	vf
7	13002.0-03.0	78	0.18	0.02	1.9	43.3	54.8	2.66	Sd,fg,lam,sl/calc	vf
	13003.0 - 13005.0								NOT SUITABLE FOR ANALYSIS	
8	13005.0-06.0	5.1	4.9	0.84	11.8	9.0	17.2	2.64	Sd,fg,lam,sl/calc	
9	13006.0-07.0	4.0	2.0	0.05	8.8	8.2	23.1	2.64	Sd,fg,lam,sl/calc	vf
10	13007.0-08.0	13	11	1.7	12.5	4.0	24.1	2.64	Sd,fg,lam,sl/calc	
11	13008.0-09.0	9.9	7.0	3.6	12.5	6.9	22.4	2.64	Sd,fg,lam,sl/calc	vf
12	13009.0-10.0	5.0	4.6	0.85	11.4	7.9	23.5	2.64	Sd,fg,lam,sl/calc	vf
13	13010.0-11.0	8.2	6.7	1.9	11.4	2.1	21.0	2.64	Sd,fg,lam,sl/calc	vf
14	13011.0-12.0	2.3	2.1	0.76	11.0	7.3	23.3	2.64	Sd,fg,lam,sl/calc	vf
15	13012.0-13.0	4.9	4.6	1.1	11.2	6.5	21.6	2.64	Sd,fg,lam,sl/calc	vf
16	13013.0-14.0	1.5	1.3	0.50	10.7	11.7	22.0	2.64	Sd,fg,lam,sl/calc	vf

* Plug permeability - sample not suitable for full diameter measurement

TERRA TEK CORE SERVICES

360 Wakara Way , Salt Lake City, Utah 84108 (801) 584-2480

ANSCHUTZ CORPORATION Date: 12 Mar 1982 TTCS File #: 91

Well: ARE #6-20U

Sample Number	Depth (feet)	Permeability Horz (md)	Horz-90° (md)	Vert (md)	Porosity (%)	Saturation Oil (%)	H2O (%)	Grain Density (gm/cc)	Lithology	
17	13014.0-15.0	3.8	3.4	0.75	11.6	6.7	21.6	2.64	Sd,fg,lam,sl/calc	vf
18	13015.0-16.0	0.70	0.54	0.16	9.9	9.3	25.6	2.64	Sd,fg,lam,sl/calc	vf
19	13016.0-17.0	11+	11	0.86	11.1	5.5	27.0	2.64	Sd,fg,lam,sl/calc	
20	13017.0-18.0	3.8	3.5	0.90	11.5	7.7	26.6	2.64	Sd,fg,lam,sl/calc	vf
21	13018.0-19.0	1.5	1.3	0.62	11.4	7.1	28.6	2.64	Sd,fg,lam,sl/calc	
22	13019.0-20.0	17+	1.5	1.5	11.2	7.3	26.0	2.63	Sd,fg,lam,sl/calc	
23	13020.0-21.0	2.0	1.5	0.37	10.2	7.6	26.1	2.64	Sd,fg,lam,sl/calc	vf
24	13021.0-22.0	1.4	1.3	0.42	9.9	8.7	26.6	2.64	Sd,fg,lam,sl/calc	vf
25	13022.0-23.0	1.4	1.2	0.22	9.8	10.4	25.6	2.64	Sd,fg,lam,sl/calc	vf
26	13023.0-24.0	1.3	1.3	0.19	9.5	11.3	25.1	2.64	Sd,fg,lam,sl/calc	
27	13024.0-25.0	1.6	1.5	0.20	9.5	13.7	21.0	2.64	Sd,fg,lam,sl/calc	vf
28	13025.0-26.0	2.0	2.0	0.26	9.2	7.8	24.4	2.64	Sd,fg,lam,sl/calc	
29	13026.0-27.0	1.9	1.8	0.23	9.6	6.7	25.7	2.64	Sd,fg,lam,sl/calc	
30	13027.0-28.0	1.6	1.5	0.24	9.6	7.6	24.3	2.64	Sd,fg,lam,sl/calc	
31	13028.0-29.0	1.1	0.91	0.14	9.2	10.9	24.7	2.64	Sd,fg,lam,sl/calc	vf
32	13029.0-30.0	0.67	0.63	0.11	8.3	9.7	26.9	2.64	Sd,fg,lam,sl/calc	
33	13030.0-31.0	0.60	0.55	0.20	9.4	8.7	25.6	2.64	Sd,fg,lam,sl/calc	
34	13031.0-32.0	0.50	0.50	0.13	8.9	9.1	27.6	2.64	Sd,fg,lam,sl/calc	
35	13032.0-33.0	0.93	0.90	0.13	8.7	10.1	26.6	2.64	Sd,fg,lam,sl/calc	
36	13033.0-34.0	0.65	0.63	0.10	8.5	10.6	28.9	2.64	Sd,fg,lam,sl/calc	
37	13034.0-35.0	0.75	0.71	0.16	9.2	9.3	25.9	2.64	Sd,fg,lam,sl/calc	
38	13035.0-36.0	0.26	0.26	0.12	8.4	14.3	22.0	2.64	Sd,fg,lam,sl/calc	

+ Horizontal dehydration crack

TERRA TEK CORE SERVICES

360 Wakara Way , Salt Lake City, Utah 84108 (801) 584-2480

ANSCHUTZ CORPORATION Date: 12 Mar 1982 TTCS File #: 91
Well: ARE #6-20U

Sample Number	Depth (feet)	Permeability Horz (md)	Horz-90° (md)	Vert (md)	Porosity (%)	Saturation Oil (%)	H2O (%)	Grain Density (gm/cc)	Lithology	
39	13036.0-37.0	0.27	0.27	0.08	7.6	9.3	29.5	2.64	Sd,fg,lam,sl/calc	
40	13037.0-38.0	5.3+	0.44	0.05	6.7	16.2	28.6	2.64	Sd,fg,lam,sl/calc	
41	13038.0-39.0	0.19	0.17	0.06	7.1	9.3	29.7	2.64	Sd,fg,lam,sl/calc	
42	13039.0-40.0	0.20	0.15	0.06	7.0	15.4	25.5	2.65	Sd,fg,lam,sl/calc	vf
43	13040.0-41.0	0.37	0.35	0.08	7.9	14.9	23.7	2.64	Sd,fg,lam,sl/calc	vf
44	13041.0-42.0	0.46	0.45	0.09	7.9	24.4	16.1	2.64	Sd,fg,lam,sl/calc	vf
45	13042.0-43.0	25	0.96	0.14	8.9	10.3	25.5	2.64	Sd,fg,lam,sl/calc	vf
46	13043.0-44.0	1.9	1.8	0.22	9.5	12.2	22.2	2.64	Sd,fg,lam,sl/calc	vf
47	13044.0-45.0	1.3	1.0	0.21	8.5	10.6	24.2	2.64	Sd,fg,lam,sl/calc	vf
48	13045.0-46.0	1.9	1.3	0.27	8.1	13.7	24.0	2.64	Sd,fg,lam,sl/calc	
49	13046.0-47.0	2.4	0.45	0.29	7.3	15.5	27.2	2.64	Sd,fg,lam,sl/calc	vf
50	13047.0-48.0	2.0	2.0	1.5	8.6	10.5	24.9	2.64	Sd,fg,lam,sl/calc	
51	13048.0-49.0	1.4	1.2	0.67	9.7	12.5	26.9	2.65	Sd,fg,lam,sl/calc	
52	13049.0-50.0	0.79	0.72	0.50	8.2	8.9	26.5	2.65	Sd,fg,lam,sl/calc	
53	13050.0-51.0	9.6+	6.3	0.33	7.2	10.8	24.0	2.65	Sd,fg,lam,sl/calc	
54	13051.0-52.0	1.3	1.2	0.84	8.1	18.2	25.3	2.64	Sd,fg,lam,sl/calc	
55	13052.0-53.0	1.1	1.0	4.2	9.3	10.5	19.9	2.64	Sd,fg,lam,sl/calc	vf
56	13053.0-54.0	3.8	3.7	0.77	9.0	10.2	23.3	2.64	Sd,fg,lam,sl/calc	vf
57	13054.0-55.0	1.6	1.0	0.35	9.4	7.6	24.4	2.64	Sd,fg,lam,sl/calc	
58	13055.0-56.0	2.2	1.6	0.28	8.8	7.2	22.9	2.64	Sd,fg,lam,sl/calc	
59	13056.0-57.0	1.4	1.3	0.24	7.9	6.7	25.4	2.64	Sd,fg,lam,sl/calc	
60	13057.0-58.0	4.0	2.0	0.28	8.1	8.2	23.1	2.64	Sd,fg,lam,sl/calc	

+ Horizontal dehydration crack

TERRA TEK CORE SERVICES

360 Wakara Way , Salt Lake City, Utah 84108 (801) 584-2480

ANSCHUTZ CORPORATION Date: 12 Mar 1982 TTCS File #: 91

Well: ARE #6-20U

Sample Number	Depth (feet)	Permeability Horz (md)	Horz-90° (md)	Vert (md)	Porosity (%)	Saturation Oil (%)	H2O (%)	Grain Density (gm/cc)	Lithology	
61	13058.0-59.0	1.1	0.89	0.37	8.2	6.4	22.1	2.64	Sd,fg,lam,sl/calc	
62	13059.0-60.0	0.85	0.57	0.16	8.2	5.0	22.9	2.64	Sd,fg,lam,sl/calc	
63	13060.0-61.0	0.96	0.10	0.28	6.3	5.9	30.9	2.64	Sd,fg,lam,sl/calc	vf
64	13061.0-62.0	0.11	*	0.07	6.7	5.0	28.8	2.64	Sd,fg,lam,sl/calc	vf
65	13062.0-63.0	0.08	0.07	0.05	6.2	4.9	31.0	2.64	Sd,fg,lam,sl/calc	vf
66	13063.0-64.0	0.07	0.06	0.05	6.2	5.3	30.9	2.64	Sd,fg,lam,sl/calc	
67	13064.0-65.0	513	0.06	0.03	5.4	5.7	29.6	2.64	Sd,fg,lam,sl/calc	vf
68	13065.0-66.0	0.03	*	0.03	2.1	16.5	74.3	2.65	Sd,fg,lam,sl/calc	vf
69	13066.0-67.0	0.03	*	0.02	4.4	13.2	51.7	2.66	Sd,fg,lam,sl/calc	vf
70	13067.0-68.0	875	0.48	2039	7.0	13.5	26.9	2.64	Sd,fg,lam,sl/calc	vf
71	13068.0-69.0	1.5	1.3	1.1	7.4	5.3	19.2	2.64	Sd,fg,lam,sl/calc	
72	13069.0-70.0	0.10	0.07	4.0	5.0	0.4	52.9	2.64	Sd,fg,lam,sl/calc	vf
73	13070.0-71.0	335	0.12	729	5.6	16.2	56.9	2.64	Sd,fg,lam,sl/calc	vf
74	13071.0-72.0	264	8.3	1212	5.5	25.0	58.1	2.65	Sd,fg,lam,sl/calc	vf
75	13072.0-73.0	209	0.03	401	5.0	35.0	44.6	2.65	Sd,fg,lam,sl/calc	vf
76	13073.0-74.0	0.04	0.03	1.1	4.1	29.0	40.4	2.66	Sd,fg,lam,sl/calc	vf
77	13074.0-75.0	221	0.05	326	4.9	24.9	42.3	2.66	Sd,fg,lam,sl/calc	vf
78	13075.0-76.0	2.0	0.16	0.20	4.7	17.1	30.3	2.65	Sd,fg,lam,sl/calc	vf
79	13076.0-77.0	1.3	1.2	0.16	8.8	4.8	18.3	2.64	Sd,fg,lam,sl/calc	
80	13077.0-78.0	1.8	1.1	0.33	7.8	7.1	15.5	2.64	Sd,fg,lam,sl/calc	
81	13078.0-79.0	0.61	0.55	0.15	7.9	5.4	20.1	2.64	Sd,fg,lam,sl/calc	
82	13079.0-80.0	0.46	0.42	0.13	8.0	5.6	20.2	2.64	Sd,fg,lam,sl/calc	

* Plus permeability - sample not suitable for full diameter measurement

TERRA TEK CORE SERVICES

360 Wakara Way , Salt Lake City, Utah 84108 (801) 584-2480

ANSCHUTZ CORPORATION Date: 12 Mar 1982 TTCS File #: 91

Well: ARE #6-20U

Sample Number	Depth (feet)	Permeability Horz (md)	Horz-90° (md)	Vert (md)	Porosity (%)	Saturation Oil (%)	H2O (%)	Grain Density (gm/cc)	Lithology	
83	13080.0-81.0	0.17	0.16	1.9	6.8	5.3	22.6	2.64	Sd,fg,lam,sl/calc	
84	13081.0-82.0	0.18	0.16	0.08	6.8	4.5	23.8	2.64	Sd,fg,lam,sl/calc	
85	13082.0-83.0	0.15	0.15	0.07	7.2	5.2	23.0	2.64	Sd,fg,lam,sl/calc	
86	13083.0-84.0	0.34	0.34	0.07	7.1	10.9	24.5	2.64	Sd,fg,lam,sl/calc	
87	13084.0-85.0	0.33	0.27	0.16	8.0	6.9	19.6	2.64	Sd,fg,lam,sl/calc	
88	13085.0-86.0	0.27	0.23	0.08	7.4	6.3	21.2	2.64	Sd,fg,lam,sl/calc	
89	13086.0-87.0	0.29	0.25	0.10	7.3	9.2	18.3	2.64	Sd,fg,lam,sl/calc	
90	13087.0-88.0	0.28	0.24	0.14	7.8	6.4	19.7	2.64	Sd,fg,lam,sl/calc	vf
91	13088.0-89.0	0.83	0.56	0.15	9.7	8.1	18.6	2.64	Sd,fg,lam,sl/calc	
92	13089.0-90.0	0.73	0.53	0.25	11.2	10.0	14.3	2.64	Sd,fg,lam,sl/calc	
93	13090.0-91.0	7.0	5.6	2.7	12.3	5.3	16.4	2.64	Sd,fg,lam,sl/calc	vf
94	13091.0-92.0	5.3	3.4	1.6	11.8	8.6	14.2	2.64	Sd,fg,lam,sl/calc	
95	13092.0-93.0	6.4	1.7	1.3	11.6	5.7	17.0	2.64	Sd,fg,lam,sl/calc	
96	13093.0-94.0	300	8.9	910	12.3	8.1	15.9	2.64	Sd,fg,lam,sl/calc	vf
97	13094.0-95.0	106	2.7	68	11.9	7.8	14.3	2.64	Sd,fg,lam,sl/calc	vf
98	13095.0-96.0	8.3	5.5	2.5	12.4	5.1	13.8	2.64	Sd,fg,lam,sl/calc	
99	13096.0-97.0	6.8	4.9	2.1	12.6	7.1	12.0	2.64	Sd,fg,lam,sl/calc	
100	13097.0-98.0	7.0	6.3	1.2	12.8	4.8	15.3	2.64	Sd,fg,lam,sl/calc	
101	13098.0-99.0	6.2	4.1	1.6	12.0	4.7	13.7	2.64	Sd,fg,lam,sl/calc	
102	13099.0-00.0	5.3	3.3	1.6	11.8	4.8	14.1	2.64	Sd,fg,lam,sl/calc	
103	13100.0-01.0	6.7	3.4	2.1	12.1	5.1	12.7	2.64	Sd,fg,lam,sl/calc	
104	13101.0-02.0	4.9	3.6	1.2	11.9	4.6	14.6	2.64	Sd,fg,lam,sl/calc	

TERRA TEK CORE SERVICES

360 Wakara Way , Salt Lake City, Utah 84108 (801) 584-2480

ANSCHUTZ CORPORATION
Well: ARE #6-20U

Date: 12 Mar 1982

TTCS File #: 91

Sample Number	Depth (feet)	Permeability Horz (md)	Permeability Horz-90° (md)	Permeability Vert (md)	Porosity (%)	Saturation Oil (%)	Saturation H2O (%)	Grain Density (gm/cc)	Lithology	
105	13102.0-03.0	5.4	4.6	0.52	10.8	4.6	14.4	2.64	Sd,fg,lam,sl/calc	
106	13103.0-04.0	6.9	5.1	1.4	10.7	5.1	15.5	2.64	Sd,fg,lam,sl/calc	
107	13104.0-05.0	12+	2.7	0.90	10.7	5.0	16.9	2.64	Sd,fg,lam,sl/calc	
108	13105.0-06.0	4.2	3.2	0.38	10.3	6.5	15.5	2.64	Sd,fg,lam,sl/calc	
109	13106.0-07.0	7.5	5.9	1.2	11.2	5.6	13.8	2.64	Sd,fg,lam,sl/calc	vf
110	13107.0-08.0	5.7	4.7	0.45	9.9	4.0	17.5	2.64	Sd,fg,lam,sl/calc	
111	13108.0-09.0	1.5	1.1	0.18	8.9	10.9	17.1	2.64	Sd,fg,lam,sl/calc	vf
112	13109.0-10.0	1.5	1.5	0.58	11.4	5.5	21.8	2.64	Sd,fg,lam,sl/calc	
113	13110.0-11.0	0.95	0.91	0.36	11.0	5.1	25.5	2.64	Sd,fg,lam,sl/calc	
114	13111.0-12.0	1.1	0.58	0.31	10.7	5.8	25.8	2.64	Sd,fg,lam,sl/calc	
115	13112.0-13.0	0.22	*	0.26	9.3	11.9	28.4	2.64	Sd,fg,lam,sl/calc	vf
116	13113.0-14.0	0.71	0.37	0.17	8.9	4.5	20.1	2.64	Sd,fg,lam,sl/calc	vf
117	13114.0-15.0	1.1	0.80	0.13	8.7	4.4	31.2	2.64	Sd,fg,lam,sl/calc	
118	13115.0-16.0	0.24	0.23	0.06	8.0	5.1	39.2	2.65	Sd,fg,lam,sl/calc	
119	13116.0-17.0	0.18	0.17	0.06	8.2	14.0	26.5	2.64	Sd,fg,lam,sl/calc	
120	13117.0-18.0	0.12	0.11	0.05	7.7	3.3	35.0	2.65	Sd,fg,lam,sl/calc	
121	13118.0-19.0	0.08	0.08	0.02	5.9	7.1	33.1	2.64	Sd,fg,lam,sl/calc	
122	13119.0-20.0	0.12	0.08	0.07	5.0	11.8	21.1	2.64	Sd,fg,lam,sl/calc	vf
123	13120.0-21.0	76	1.5	0.12	4.3	13.5	46.9	2.64	Sd,fg,lam,sl/calc	vf
124	13121.0-22.0	147	0.08	1935	4.7	28.2	49.3	2.64	Sd,fg,lam,sl/calc	vf
125	13122.0-23.0	0.09	0.03	0.03	4.5	26.6	29.9	2.64	Sd,fg,lam,sl/calc	
126	13123.0-24.0	2.3	0.04	0.01	3.0	28.3	49.4	2.64	Sd,fg,lam,sl/calc	vf

* Plus permeability - sample not suitable for full diameter measurement
\+ Horizontal dehydration crack

TERRA TEK CORE SERVICES

360 Wakara Way , Salt Lake City, Utah 84108 (801) 584-2480

ANSCHUTZ CORPORATION Date: 12 Mar 1982 TTCS File #: 91

Well: ARE #6-20U

Sample Number	Depth (feet)	Permeability Horz (md)	Permeability Horz-90' (md)	Permeability Vert (md)	Porosity (%)	Saturation Oil (%)	Saturation H2O (%)	Grain Density (gm/cc)	Lithology	
127	13124.0-25.0	0.05	0.05	0.02	3.5	29.1	52.9	2.65	Sd,fg,lam,sl/calc	
128	13125.0-26.0	232	0.10	1794	5.9	22.5	23.4	2.64	Sd,fg,lam,sl/calc	vf
129	13126.0-27.0	0.58	0.43	0.10	8.7	9.0	23.3	2.64	Sd,fg,lam,sl/calc	
130	13127.0-28.0	0.40	0.38	0.15	9.6	6.8	24.1	2.64	Sd,fg,lam,sl/calc	
131	13128.0-29.0	0.34	0.30	0.18	9.6	7.0	24.4	2.64	Sd,fg,lam,sl/calc	
132	13129.0-30.0	2.1	0.72	0.27	9.5	7.2	21.3	2.64	Sd,fg,lam,sl/calc	
133	13130.0-31.0	0.50	0.41	0.14	8.7	8.1	25.7	2.64	Sd,fg,lam,sl/calc	
134	13131.0-32.0	4.6	2.9	2.2	12.6	6.7	23.1	2.64	Sd,fg,lam,sl/calc	
135	13132.0-33.0	3.1	1.8	1.3	11.9	6.8	23.1	2.64	Sd,fg,lam,sl/calc	
136	13133.0-34.0	2.0	1.9	1.1	11.3	6.6	23.9	2.64	Sd,fg,lam,sl/calc	
137	13134.0-35.0	2.8	2.3	1.5	11.9	6.9	23.2	2.64	Sd,fg,lam,sl/calc	
138	13135.0-36.0	4.7	2.8	1.7	11.9	7.1	19.5	2.64	Sd,fg,lam,sl/calc	
139	13136.0-37.0	1.8	0.23	0.57	5.1	13.5	29.4	2.64	Sd,fg,lam,sl/calc	vf
140	13137.0-38.0	9.4	3.9	2.8	11.6	5.9	17.9	2.65	Sd,fg,lam,sl/calc	
141	13138.0-39.0	2.1	1.5	0.35	9.1	7.0	20.4	2.64	Sd,fg,lam,sl/calc	
142	13139.0-40.0	1.3	1.2	0.67	9.5	7.9	22.3	2.64	Sd,fg,lam,sl/calc	
143	13140.0-41.0	0.58	0.35	0.08	5.6	8.3	21.7	2.64	Sd,fg,lam,sl/calc	
144	13141.0-42.0	0.20	0.11	0.05	5.8	11.4	27.5	2.64	Sd,fg,lam,sl/calc	
145	13142.0-43.0	0.22	0.21	0.05	6.4	11.1	26.7	2.64	Sd,fg,lam,sl/calc	
146	13143.0-44.0	0.21	0.20	0.10	7.6	11.3	20.1	2.64	Sd,fg,lam,sl/calc	
147	13144.0-45.0	3.1	0.27	0.23	7.7	16.3	20.4	2.64	Sd,fg,lam,sl/calc	vf
148	13145.0-46.0	0.20	0.15	0.12	8.1	13.6	17.4	2.64	Sd,fg,lam,sl/calc	

TERRA TEK CORE SERVICES

360 Wakara Way , Salt Lake City, Utah 84108 (801) 584-2480

ANSCHUTZ CORPORATION Date: 12 Mar 1982 TTCS File #: 91
Well: ARE #6-20U

Sample Number	Depth (feet)	Permeability Horz (md)	Horz-90° (md)	Vert (md)	Porosity (%)	Saturation Oil (%)	H2O (%)	Grain Density (gm/cc)	Lithology	
149	13146.0-47.0	0.10	0.09	0.06	7.7	18.8	17.6	2.64	Sd,fg,lam,sl/calc	
150	13147.0-48.0	0.19	0.19	0.06	8.3	17.0	20.3	2.64	Sd,fg,lam,sl/calc	
151	13148.0-49.0	0.12	0.08	0.06	4.5	32.6	35.3	2.64	Sd,fg,lam,sl/calc	
152	13149.0-50.0	2.5	0.06	1028	8.6	21.8	24.8	2.64	Sd,fg,lam,sl/calc	vf
153	13150.0-51.0	354	0.06	1044	8.1	7.7	33.8	2.64	Sd,fg,lam,sl/calc	vf
154	13151.0-52.0	2.3	0.47	0.22	8.4	6.8	26.5	2.64	Sd,fg,lam,sl/calc	vf
155	13152.0-53.0	0.13	0.12	0.07	7.9	8.6	24.6	2.64	Sd,fg,lam,sl/calc	
156	13153.0-54.0	0.12	0.11	0.07	8.0	6.4	22.2	2.64	Sd,fg,lam,sl/calc	
157	13154.0-55.0	0.30	0.30	0.20	9.1	6.7	19.9	2.64	Sd,fg,lam,sl/calc	
158	13155.0-56.0	0.19	0.17	0.18	9.2	6.5	23.2	2.64	Sd,fg,lam,sl/calc	
159	13156.0-57.0	663	1.9	1451	10.3	4.8	25.4	2.64	Sd,fg,sl/calc	vf
160	13157.0-58.0	0.04	*	0.03	6.8	7.0	38.3	2.66	Sd,fg,sl/calc	vf
161	13158.0-59.0	0.06	0.05	0.04	6.5	7.9	38.8	2.65	Sd,fg	
162	13159.0-60.0	0.10	0.10	0.09	7.0	4.9	30.9	2.64	Sd,fg	
163	13160.0-61.0	<0.01	<0.01	0.01	6.7	10.2	37.1	2.64	Sd,fg	
164	13161.0-62.0	0.11	0.10	0.06	8.4	5.3	27.2	2.64	Sd,fg,sl/calc	
165	13162.0-63.0	0.61	0.16	0.12	8.8	6.8	25.9	2.64	Sd,fg,sl/calc	
166	13163.0-64.0	0.13	0.07	0.04	4.8	3.2	36.6	2.64	Sd,fg,sl/calc	
167	13164.0-65.0	0.06	0.05	0.04	5.5	4.5	17.3	2.65	Sd,fg,sl/calc	
168	13165.0-66.0	0.49	0.37	0.35	10.2	6.4	24.2	2.64	Sd,fg,sl/calc	
169	13166.0-67.0	0.36	0.21	0.14	9.0	4.4	27.0	2.64	Sd,fg,sl/calc	
170	13167.0-68.0	4.8	2.2	0.27	9.8	7.9	26.7	2.64	Sd,fg,sl/calc	

* Plug permeability - sample not suitable for full diameter measurement

TERRA TEK CORE SERVICES

360 Wakara Way , Salt Lake City, Utah 84108 (801) 584-2480

ANSCHUTZ CORPORATION
Well: ARE #6-20U

Date: 12 Mar 1982

TTCS File #: 91

Sample Number	Depth (feet)	Permeability Horz (md)	Horz-90° (md)	Vert (md)	Porosity (%)	Saturation Oil (%)	H2O (%)	Grain Density (gm/cc)	Lithology	
171	13168.0-69.0	0.87	0.87	0.94	11.9	4.7	7.6	2.64	Sd,fg,sl/calc	
172	13169.0-70.0	2.2	2.0	0.66	12.0	2.1	7.9	2.64	Sd,fg,sl/calc	
173	13170.0-71.0	20	18	1.5	12.2	1.8	7.9	2.64	Sd,fg,sl/calc	
174	13171.0-72.0	2033	2.7	94	12.3	5.6	9.0	2.64	Sd,fg,sl/calc	vf
175	13172.0-73.0	0.13	0.09	0.05	10.7	1.5	6.9	2.64	Sd,fg,sl/calc	
176	13173.0-74.0	0.81	*	0.56	9.8	2.3	8.3	2.64	Sd,fg,sl/calc	vf
177	13174.0-75.0	0.46	0.36	0.17	9.5	5.4	8.9	2.64	Sd,fg,sl/calc	
178	13175.0-76.0	16	4.8	349	9.4	12.0	10.2	2.64	Sd,fg,sl/calc	vf
179	13176.0-77.0	3.5	3.5	0.13	9.1	16.2	12.4	2.64	Sd,fg,sl/calc	vf
180	13177.0-78.0	0.15	0.14	0.05	7.1	2.5	15.6	2.64	Sd,fg,sl/calc	
181	13178.0-79.0	0.17	0.15	0.06	7.2	4.6	11.5	2.64	Sd,fg,sl/calc	
182	13179.0-80.0	0.29	0.26	0.05	6.2	3.3	12.4	2.64	Sd,fg,sl/calc	
183	13180.0-81.0	0.11	0.11	0.06	8.7	7.4	8.1	2.64	Sd,fg,sl/calc	
184	13181.0-82.0	0.11	0.10	0.07	8.7	7.9	8.6	2.64	Sd,fg,sl/calc	
185	13182.0-83.0	244	0.13	312	9.2	5.6	13.8	2.64	Sd,fg,sl/calc	vf
186	13183.0-84.0	0.61	0.31	0.27	9.7	6.3	13.5	2.64	Sd,fg,sl/calc	vf
187	13184.0-85.0	2.4	1.1	2.1	9.9	3.4	12.8	2.64	Sd,fg,sl/calc	vf
188	13185.0-86.0	0.44	*	0.20	10.2	3.0	12.0	2.64	Sd,fg,sl/calc	vf
189	13186.0-87.0	29	0.09	22	6.1	3.1	13.4	2.64	Sd,fg,sl/calc	vf
190	13187.0-88.0	0.10	0.09	0.04	6.8	2.0	13.3	2.64	Sd,fg,sl/calc	
191	13188.0-89.0	0.56	0.22	0.10	7.0	1.5	13.6	2.64	Sd,fg,sl/calc	
192	13189.0-90.0	0.14	0.12	0.04	6.3	2.4	14.4	2.64	Sd,fg,sl/calc	

* Plug permeability - sample not suitable for full diameter measurement

TERRA TEK CORE SERVICES

360 Wakara Way , Salt Lake City, Utah 84108 (801) 584-2480

ANSCHUTZ CORPORATION Date: 12 Mar 1982 TTCS File #: 91
Well: ARE #6-20U

Sample Number	Depth (feet)	Permeability Horz (md)	Horz-90° (md)	Vert (md)	Porosity (%)	Saturation Oil (%)	H2O (%)	Grain Density (gm/cc)	Lithology	
193	13190.0-91.0	0.28	0.11	0.39	6.3	1.0	14.7	2.64	Sd,fg,sl/calc	
194	13191.0-92.0	0.20	0.10	0.03	5.9	1.2	11.5	2.64	Sd,fg,sl/calc	vf
195	13192.0-93.0	426	0.45	996	7.6	12.0	12.2	2.64	Sd,fg,sl/calc	vf
196	13193.0-94.0	99	0.33	2695	6.2	4.1	12.9	2.64	Sd,fg,sl/calc	vf
197	13194.0-95.0	366	0.09	1422	4.3	14.7	17.2	2.65	Sd,fg,sl/calc	vf
198	13195.0-96.0	0.03	0.03	0.03	4.8	14.1	11.0	2.64	Sd,fg,sl/calc	
199	13196.0-97.0	0.30	0.07	0.06	6.2	4.0	6.1	2.64	Sd,sl/calc	vf
200	13197.0-98.0	0.36	0.30	0.21	7.4	1.6	7.3	2.64	Sd,m-fg	
201	13198.0-99.0	226	4.4	7.6	8.4	5.1	6.9	2.64	Sd,fg,sl/calc	vf
202	13199.0-00.0	1.5	1.1	0.18	8.0	4.7	7.0	2.64	Sd,m-fg,sl/calc	
203	13200.0-01.0	5.5	2.9	0.43	9.1	2.0	5.4	2.64	Sd,m-fg,lam,sl/calc	vf
204	13201.0-02.0	1.0	0.53	0.22	9.1	6.1	4.8	2.64	Sd,m-fg,sl/calc	
205	13202.0-03.0	1.4	0.26	0.13	7.5	5.7	6.5	2.64	Sd,m-fg,sl/calc	
206	13203.0-04.0	0.52	0.48	0.08	7.1	4.3	6.4	2.64	Sd,m-fg,sl/calc,lam	
207	13204.0-05.0	2.1	0.63	0.66	7.2	3.7	4.6	2.64	Sd,m-fg,sl/calc	
208	13205.0-06.0	2.2	0.50	0.20	7.3	5.7	6.8	2.64	Sd,m-fg,sl/calc	
209	13206.0-07.0	1.3	0.21	0.08	6.1	15.7	6.1	2.63	Sd,m-fg,sl/calc	
210	13207.0-08.0	0.37	0.12	0.06	5.1	3.8	5.5	2.64	Sd,m-fg,lam,sl/calc	vf
211	13208.0-09.0	0.17	0.06	0.04	4.3	3.8	14.8	2.64	Sd,m-fg,lam,sl/calc	vf
212	13209.0-10.0	0.12	0.12	0.04	5.4	3.7	12.7	2.64	Sd,m-fg,lam,sl,calc	
213	13210.0-11.0	0.11	0.10	0.05	5.3	3.7	12.2	2.64	Sd,m-fg,lam,sl,calc	
214	13211.0-12.0	0.40	0.36	0.12	7.3	3.0	6.9	2.64	Sd,m-fg,lam,sl,calc	

TERRA TEK CORE SERVICES

360 Wakara Way , Salt Lake City, Utah 84108 (801) 584-2480

ANSCHUTZ CORPORATION Date: 12 Mar 1982 TTCS File #: 91
Well: ARE #6-20U

Sample Number	Depth (feet)	Permeability Horz (md)	Horz-90° (md)	Vert (md)	Porosity (%)	Saturation Oil (%)	H2O (%)	Grain Density (gm/cc)	Lithology	
215	13212.0-13.0	1.2	0.41	0.08	6.1	6.3	7.9	2.64	Sd,m-fg,sl/calc	
216	13213.0-14.0	0.52	0.23	0.07	6.8	4.9	8.4	2.65	Sd,m-fg,sl/calc	vf
217	13214.0-15.0	17	0.26	0.09	6.3	2.7	11.6	2.64	Sd,m-fg,sl/calc,lam	vf
218	13215.0-16.0	599	0.18	2065	5.9	15.7	11.3	2.64	Sd,m-fg,sl/calc	vf
219	13216.0-17.0	1155	0.48	497	4.6	1.4	13.6	2.64	Sd,m-fg,sl/calc	vf
220	13217.0-18.0	0.02	*	0.03	3.4	4.6	12.4	2.65	Sd,m-fg,lam,sl/calc	
221	13218.0-19.0	0.19	0.11	0.05	6.0	2.4	7.8	2.64	Sd,m-fg,lam,sl/calc	
222	13219.0-20.0	0.19	0.17	0.05	6.4	2.8	9.1	2.64	Sd,m-fg,lam,sl/calc	
223	13220.0-21.0	2.4	1.9	0.16	7.0	4.1	5.6	2.64	Sd,m-fg,calc	
224	13221.0-22.0	0.16	0.15	0.67	7.2	4.3	11.7	2.64	Sd,m-fg,sl/calc	vf
225	13222.0-23.0	0.54	0.43	0.10	8.6	4.8	9.3	2.64	Sd,m-fg,sl/calc	
226	13223.0-24.0	2.0	1.7	0.50	9.5	5.3	7.1	2.64	Sd,m-fg,sl/calc	
227	13224.0-25.0	5.1	3.0	4.1	11.1	4.0	3.1	2.64	Sd,fg,sl/calc	
228	13225.0-26.0	3.9	3.4	1.5	10.7	5.3	4.1	2.64	Sd,fg,sl/calc	
229	13226.0-27.0	7.2	4.7	2.4	12.2	4.5	2.8	2.64	Sd,fg	
230	13227.0-28.0	1868	157	743	13.4	11.4	6.9	2.64	Sd,fg,sl/calc	vf
231	13228.0-29.0	8.7	7.0	0.58	12.5	5.4	5.3	2.64	Sd,fg,sl/calc	
232	13229.0-30.0	8.6	6.1	2.5	12.8	4.6	4.5	2.64	Sd,fg,sl/calc	
233	13230.0-31.0	0.58	0.27	0.10	8.7	4.4	10.1	2.64	Sd,fg,sl/calc	
234	13231.0-32.0	6.1	6.0	1.2	10.8	5.3	9.4	2.64	Sd,fg,sl/calc	vf
235	13232.0-33.0	11	10	1.0	10.3	18.0	9.5	2.64	Sd,fg,sl/calc	
236	13233.0-34.0	3.7	3.5	22	10.7	12.9	18.6	2.64	Sd,fg,sl/calc	vf

* Plug permeability - sample not suitable for full diameter measurement

TERRA TEK CORE SERVICES

360 Wakara Way , Salt Lake City, Utah 84108 (801) 584-2480

ANSCHUTZ CORPORATION Date: 12 Mar 1982 TTCS File #: 91
Well: ARE #6-20U

Sample Number	Depth (feet)	Permeability Horz (md)	Horz-90° (md)	Vert (md)	Porosity (%)	Saturation Oil (%)	H2O (%)	Grain Density (gm/cc)	Lithology	
237	13234.0-35.0	0.60	*	1.6	7.4	7.4	10.8	2.64	Sd,fg,calc	vf
238	13235.0-36.0	1.4	1.00	5.2	11.1	9.9	20.5	2.64	Sd,fg,calc	vf
239	13236.0-37.0	15	0.66	0.34	10.0	10.8	17.6	2.65	Sd,fg,calc	vf
240	13237.0-38.0	2.7	2.7	101	12.5	8.3	7.8	2.64	Sd,fg,sl/calc	vf
241	13238.0-39.0	2.4	2.4	0.91	10.8	11.5	4.3	2.64	Sd,fg,sl/calc	
242	13239.0-40.0	44	6.8	1.1	13.1	9.1	9.2	2.64	Sd,fg,sl/calc	
243	13240.0-41.0	3.3	3.1	5.3	12.7	10.7	12.3	2.64	Sd,fg,sl/calc	vf
244	13241.0-42.0	4.7	4.3	1.1	9.2	2.4	7.0	2.64	Sd,m-fg,sl/calc	
	13242.0 - 13245.0								NOT RECOVERED	
245	13245.0-46.0	6.4+	6.3	0.73	9.7	5.7	14.2	2.64	Sd,fg,sl/calc	
246	13246.0-47.0	4.0	3.9	0.61	9.7	5.1	14.5	2.64	Sd,fg,calc	
247	13247.0-48.0	3.2	2.7	4.2	9.8	5.0	14.7	2.64	Sd,fg,calc	vf
248	13248.0-49.0	0.76	*	0.28	9.8	6.3	16.0	2.65	Sd,fg,sl/calc	
249	13249.0-50.0	22	13	5.3	11.4	9.5	12.6	2.64	Sd,fg,sl/calc	vf
250	13250.0-51.0	208	29	4.0	14.9	8.2	8.9	2.64	Sd,fg,sl/calc	
251	13251.0-52.0	136	103	6.9	13.4	5.8	12.8	2.64	Sd,fg,sl/calc	vf
252	13252.0-53.0	99	64	8.6	14.5	7.1	9.2	2.64	Sd,fg,sl/calc	
253	13253.0-54.0	324	26	6.9	16.1	13.2	12.1	2.64	Sd,fg,sl/calc	
254	13254.0-55.0	23	22	25	15.0	4.7	14.5	2.64	Sd,m-fg,sl/calc	
255	13255.0-56.0	17	3.9	14	14.0	5.2	15.5	2.64	Sd,m-fg,sl/calc	vf
256	13256.0-57.0	17	17	16	14.6	7.0	14.7	2.64	Sd,m-fg,sl/calc	vf
257	13257.0-58.0	35	25	25	13.9	4.4	13.8	2.64	Sd,m-fg,sl/calc	vf

* Plug permeability - sample not suitable for full diameter measurement
\+ Horizontal dehydration crack

TERRA TEK CORE SERVICES

360 Wakara Way , Salt Lake City, Utah 84108 (801) 584-2480

ANSCHUTZ CORPORATION Date: 12 Mar 1982 TTCS File #: 91
Well: ARE #6-20U

Sample Number	Depth (feet)	Permeability Horz (md)	Horz-90° (md)	Vert (md)	Porosity (%)	Saturation Oil (%)	H2O (%)	Grain Density (gm/cc)	Lithology	
258	13258.0-59.0	27	22	27	14.6	5.8	14.7	2.64	Sd,m-fg,sl/calc	
259	13259.0-60.0	21	17	24	13.8	4.1	12.0	2.64	Sd,m-fg,calc	
260	13260.0-61.0	37	*	15	13.6	8.1	12.8	2.64	Sd,fg,sl/calc	
261	13261.0-62.0	56	47	41	12.8	4.9	14.2	2.64	Sd,m-fg,sl/calc	
262	13262.0-63.0	40	38	16	13.1	5.4	10.2	2.64	Sd,m-fg,sl/calc	
263	13263.0-64.0	14	11	2.2	11.4	3.6	14.0	2.64	Sd,m-fg,sl/calc	
264	13264.0-65.0	90	18	11	14.6	6.3	24.0	2.64	Sd,m-fg	
265	13265.0-66.0	26	18	4.5	14.4	6.9	9.9	2.64	Sd,m-fg	vf
266	13266.0-67.0	251	88	24	14.7	6.9	16.2	2.64	Sd,m-fg,sl/calc	vf
267	13267.0-68.0	19	15	1.9	11.2	7.3	8.9	2.64	Sd,m-fg,sl/calc	
268	13268.0-69.0	8.3	5.5	0.30	9.0	5.0	9.7	2.64	Sd,fg,calc	
269	13269.0-70.0	3.1	2.5	0.12	7.1	7.4	9.3	2.64	Sd,fg,calc	
270	13270.0-71.0	3.0	2.2	0.31	10.7	5.5	11.6	2.64	Sd,m-fg,lam	
271	13271.0-72.0	0.90	0.82	0.16	10.3	7.3	17.8	2.64	Sd,m-fg,sl/calc	
272	13272.0-73.0	17	17	0.63	13.2	4.9	13.8	2.64	Sd,m-fg,lam,sl/calc	
273	13273.0-74.0	1.5	0.98	0.68	12.7	6.6	11.6	2.64	Sd,fg,sl/calc	
274	13274.0-75.0	0.62	0.55	0.27	11.8	4.0	15.3	2.64	Sd,fg,sl/calc	
275	13275.0-76.0	23	13	2.7	14.9	6.5	11.9	2.64	Sd,fg,sl/calc	
276	13276.0-77.0	11	9.0	1.7	12.5	5.0	11.8	2.64	Sd,m-fg,lam,sl/calc	
277	13277.0-78.0	12	9.7	3.8	13.1	4.7	13.4	2.64	Sd,m-fg,lam,sl/calc	
278	13278.0-79.0	19	14	1.7	11.3	7.1	9.6	2.64	Sd,m-fg,lam,sl/calc	
279	13279.0-80.0	0.42	0.36	0.14	10.6	6.3	17.7	2.64	Sd,m-fg,lam,sl/calc	

* Plug permeability - sample not suitable for full diameter measurement

TERRA TEK CORE SERVICES

360 Wakara Way , Salt Lake City, Utah 84108 (801) 584-2480

ANSCHUTZ CORPORATION Date: 12 Mar 1982 TTCS File #: 91
Well: ARE #6-20U

Sample Number	Depth (feet)	Permeability Horz (md)	Horz-90° (md)	Vert (md)	Porosity (%)	Saturation Oil (%)	H2O (%)	Grain Density (gm/cc)	Lithology	
280	13280.0-81.0	0.39	0.31	0.14	10.3	4.7	16.3	2.64	Sd,m-fg,lam,sl/calc	vf
281	13281.0-82.0	1.3	1.2	0.25	11.7	3.8	15.8	2.64	Sd,m-fg,lam,sl/calc	vf
282	13282.0-83.0	1.8	1.2	0.58	10.5	6.5	8.9	2.64	Sd,m-fg,sl/calc	
283	13283.0-84.0	1.3	1.3	0.15	9.2	2.8	15.3	2.64	Sd,m-fg,lam,sl/calc	
284	13284.0-85.0	1.00	0.98	0.19	11.0	2.8	15.5	2.64	Sd,m-fg,lam,sl/calc	
285	13285.0-86.0	1.6	1.4	0.41	12.3	4.0	15.5	2.64	Sd,m-fg,sl/calc	
286	13286.0-87.0	3.7	3.4	1.7	13.7	4.5	13.0	2.64	Sd,m-fg,sl/calc	
287	13287.0-88.0	1.5	1.2	0.14	13.1	6.2	13.0	2.64	Sd,m-fg,sl/calc	
288	13288.0-89.0	5.3	3.9	0.72	13.0	3.8	14.7	2.64	Sd,m-fg,lam,sl/calc	
289	13289.0-90.0	4.6	4.4	1.6	13.5	3.8	14.3	2.64	Sd,m-fg,lam,sl/calc	
290	13290.0-91.0	8.8	8.0	4.6	13.9	8.1	11.2	2.64	Sd,fg,calc	
291	13291.0-92.0	6.3	4.9	2.5	13.8	3.5	12.0	2.64	Sd,m-fg,lam,sl/calc	
292	13292.0-93.0	7.9	6.7	2.8	14.4	5.9	11.0	2.64	Sd,fg,sl/calc	
293	13293.0-94.0	4.3	4.3	2.4	13.5	7.0	8.4	2.64	Sd,fg,calc	
294	13294.0-95.0	4.9	4.2	2.3	13.8	3.5	10.1	2.64	Sd,fg,sl/calc	
295	13295.0-96.0	3.6	3.1	1.4	13.4	3.7	12.5	2.64	Sd,m-fg,sl/calc	
296	13296.0-97.0	9.5	8.0	5.2	14.1	4.1	10.1	2.64	Sd,m-fg,sl/calc	
297	13297.0-98.0	8.1	7.1	4.4	13.8	8.2	8.4	2.64	Sd,m-fg,sl/calc	
298	13298.0-99.0	22	19	10	15.2	3.0	11.4	2.64	Sd,m-fg,sl/calc	
299	13299.0-00.0	5.4	5.2	1.00	10.3	5.1	7.1	2.64	Sd,m-fg,lam,sl/calc	
300	13300.0-01.0	4.5	4.4	0.93	11.1	3.8	8.7	2.64	Sd,m-fg,lam	
301	13301.0-02.0	4.7	4.3	2.3	12.0	5.5	8.5	2.63	Sd,fg,sl/calc	

TERRA TEK CORE SERVICES

360 Wakara Way , Salt Lake City, Utah 84108 (801) 584-2480

ANSCHUTZ CORPORATION Date: 12 Mar 1982 TTCS File #: 91
Well: ARE #6-20U

Sample Number	Depth (feet)	Permeability Horz (md)	Horz-90° (md)	Vert (md)	Porosity (%)	Saturation Oil (%)	H2O (%)	Grain Density (gm/cc)	Lithology
302	13302.0-03.0	6.7	5.0	1.2	12.1	3.6	8.3	2.64	Sd,m-fg,lam
303	13303.0-04.0	5.5	4.1	1.1	12.4	5.6	7.1	2.64	Sd,m-fg
304	13304.0-05.0	5.3	4.4	1.3	12.2	3.9	8.3	2.64	Sd,fg,sl/calc
305	13305.0-06.0	4.8	3.7	1.2	11.9	3.7	9.5	2.64	Sd,fg,sl/calc
306	13306.0-07.0	2.0	0.19	2.1	11.5	6.4	10.2	2.63	Sd,fg,sl/calc
307	13307.0-08.0	2.5	2.4	1.2	11.8	4.4	8.5	2.64	Sd,fg,sl/calc
308	13308.0-09.0	7.0	6.3	1.2	11.3	3.4	7.0	2.64	Sd,fg,sl/calc
309	13309.0-10.0	4.3	3.8	1.0	11.8	5.8	7.2	2.64	Sd,fg,sl/calc
310	13310.0-11.0	7.9	7.7	2.8	11.9	5.3	13.6	2.64	Sd,fg,sl/calc
311	13311.0-12.0	6.3	*	2.3	12.4	4.2	13.7	2.64	Sd,fg,sl/calc
312	13312.0-13.0	19	16	1.1	11.7	3.0	5.5	2.64	Sd,fg,sl/calc
313	13313.0-14.0	17	*	2.6	12.1	2.6	5.2	2.64	Sd,fg,sl/calc
314	13314.0-15.0	5.9	4.7	2.5	11.1	4.7	5.8	2.64	Sd,fg,sl/calc
315	13315.0-16.0	14	13	4.9	11.4	3.0	5.3	2.64	Sd,fg,sl/calc
316	13316.0-17.0	2.0	1.9	0.28	10.0	6.4	9.2	2.64	Sd,fg,sl/calc
317	13317.0-18.0	3.0	2.2	0.11	8.5	5.9	13.4	2.65	Sd,fg
318	13318.0-19.0	3.8	3.8	0.19	8.6	6.2	9.8	2.64	Sd,m-fg,calc,lam
319	13319.0-20.0	3.5	3.2	0.23	8.0	7.3	9.8	2.64	Sd,m-fg,calc,lam
320	13320.0-21.0	1.6	1.3	0.29	10.0	6.6	8.5	2.64	Sd,fg,sl/calc
321	13321.0-22.0	1.1	1.0	0.16	9.5	6.0	11.6	2.64	Sd,fg,calc
322	13322.0-23.0	1.3	1.2	0.15	7.3	9.7	14.2	2.65	Sd,fg,calc
323	13323.0-24.0	3.9	3.2	0.13	8.4	7.7	9.4	2.64	Sd,fg,calc

* Plus permeability - sample not suitable for full diameter measurement

TERRA TEK CORE SERVICES

360 Wakara Way , Salt Lake City, Utah 84108 (801) 584-2480

ANSCHUTZ CORPORATION Date: 12 Mar 1982 TTCS File #: 91
Well: ARE #6-20U

Sample Number	Depth (feet)	Permeability Horz (md)	Horz-90° (md)	Vert (md)	Porosity (%)	Saturation Oil (%)	H2O (%)	Grain Density (gm/cc)	Lithology	
324	13324.0-25.0	31	0.97	0.13	8.7	7.9	9.0	2.64	Sd,fg,calc	vf
325	13325.0-26.0	0.41	0.21	0.06	6.2	3.7	16.0	2.64	Sd,fg,sl/calc	vf
326	13326.0-27.0	0.17	0.17	0.05	5.8	3.7	20.4	2.65	Sd,fg,sl/calc	
327	13327.0-28.0	7.2	6.3	0.49	9.4	6.6	9.3	2.64	Sd,fg,calc	
328	13328.0-29.0	7.0	5.5	0.59	10.5	5.2	9.1	2.64	Sd,fg,calc	
329	13329.0-30.0	11	9.6	0.42	10.7	7.1	7.2	2.64	Sd,fg,calc	
330	13330.0-31.0	19	8.5	0.41	11.1	6.7	8.3	2.64	Sd,fg,calc	
331	13331.0-32.0	3.9	3.8	0.35	8.5	6.4	5.8	2.64	Sd,fg,sl/calc	
332	13332.0-33.0	30	18	0.33	10.4	5.9	6.8	2.64	Sd,fg,sl/calc,lam	
333	13333.0-34.0	6.8	4.4	0.16	8.4	5.6	7.9	2.64	Sd,fg,sl/calc	
334	13334.0-35.0	1.2	1.2	0.09	7.6	7.0	9.8	2.64	Sd,fg,calc	
335	13335.0-36.0	0.22	0.18	0.04	5.9	7.1	13.6	2.65	Sd,fg,calc	
336	13336.0-37.0	0.17	0.14	0.05	6.1	6.1	13.9	2.64	Sd,fg,sl/calc	
337	13337.0-38.0	16	14	0.10	10.4	6.1	4.6	2.64	Sd,fg,calc	
338	13338.0-39.0	14	5.5	1.7	11.8	3.0	8.6	2.64	Sd,fg,calc	
339	13339.0-40.0	14	12	2.9	14.0	2.4	7.0	2.64	Sd,fg,sl/calc	
340	13340.0-41.0	85+	*	5.3	14.5	3.7	6.5	2.65	Sd,fg,sl/calc	vf
341	13341.0-42.0	18	11	1.6	11.9	4.5	5.5	2.64	Sd,fg,sl/calc	
342	13342.0-43.0	22+	0.82	0.56	10.4	5.0	5.8	2.64	Sd,fg,sl/calc	
343	13343.0-44.0	1.2	0.81	0.35	8.7	3.2	6.6	2.64	Sd,fg,sl/calc	
344	13344.0-45.0	2.6	2.5	0.19	7.9	2.3	7.3	2.64	Sd,fg,sl/calc	
345	13345.0-46.0	0.91	0.75	0.15	6.5	5.8	6.8	2.64	Sd,fg,sl/calc	

* Plug permeability - sample not suitable for full diameter measurement
\+ Horizontal dehydration crack

TERRA TEK CORE SERVICES

360 Wakara Way , Salt Lake City, Utah 84108 (801) 584-2480

ANSCHUTZ CORPORATION Date: 12 Mar 1982 TTCS File #: 91

Well: ARE #6-20U

Sample Number	Depth (feet)	Permeability Horz (md)	Horz-90' (md)	Vert (md)	Porosity (%)	Saturation Oil (%)	H2O (%)	Grain Density (gm/cc)	Lithology	
346	13346.0-47.0	2.4	1.4	0.12	8.0	5.9	8.2	2.64	Sd,fg,calc	
347	13347.0-48.0	0.42	0.31	0.07	8.1	5.5	9.2	2.64	Sd,fg,sl/calc	
348	13348.0-49.0	0.37	0.28	0.10	7.4	6.7	8.6	2.64	Sd,m-fg,calc	
349	13349.0-50.0	0.99	0.96	0.49	7.4	3.9	9.2	2.64	Sd,fg,sl/calc	
350	13350.0-51.0	0.39	0.22	0.07	7.5	5.9	10.4	2.65	Sd,fg,sl/calc	
351	13351.0-52.0	4.7+	0.19	0.11	6.8	6.0	12.8	2.64	Sd,fg,sl/calc	
352	13352.0-53.0	0.02	0.02	0.02	4.1	4.8	15.3	2.65	Sd,fg,sl/calc	vf
353	13353.0-54.0	0.54	0.11	7.2	4.7	1.7	22.0	2.64	Sd,fg,calc	
354	13354.0-55.0	0.11	0.07	3.8	7.9	2.0	15.6	2.64	Sd,fg,calc	
355	13355.0-56.0	0.06	0.05	0.05	8.9	3.4	15.7	2.64	Sd,fg,sl/calc	
356	13356.0-57.0	0.10	0.09	0.07	9.7	3.8	12.7	2.64	Sd,fg,sl/calc	vf
357	13357.0-58.0	0.44	*	0.20	10.4	7.1	11.2	2.64	Sd,fg,sl/calc	
358	13358.0-59.0	0.36	0.30	0.23	10.9	5.4	11.3	2.64	Sd,fg,sl/calc	
359	13359.0-60.0	0.53	0.49	0.27	12.4	6.0	10.5	2.64	Sd,fg,sl/calc	
360	13360.0-61.0	0.58	0.52	0.32	12.2	3.0	11.3	2.64	Sd,fg,sl/calc	
361	13361.0-62.0	0.47	0.45	0.04	12.0	6.2	9.5	2.64	Sd,fg,sl/calc	
362	13362.0-63.0	0.73	0.68	0.34	12.1	3.0	11.2	2.64	Sd,fg,sl/calc	
363	13363.0-64.0	0.71	0.69	0.40	12.1	5.5	10.3	2.64	Sd,fg,sl/calc	
364	13364.0-65.0	2.1	1.1	1.0	11.9	3.6	7.4	2.64	Sd,fg,sl/calc	vf
365	13365.0-66.0	2.9	*	1.2	13.9	7.3	13.5	2.64	Sd,fg,sl/calc	
366	13366.0-67.0	0.72	*	0.47	12.4	4.9	15.0	2.64	Sd,fg,sl/calc	vf
367	13367.0-68.0	4.6	*	9.2	13.4	5.5	11.5	2.64	Sd,fg,sl/calc	

* Plus permeability - sample not suitable for full diameter measurement
\+ Horizontal dehydration crack

TERRA TEK CORE SERVICES

360 Wakara Way , Salt Lake City, Utah 84108 (801) 584-2480

ANSCHUTZ CORPORATION Date: 12 Mar 1982 TTCS File #: 91
Well: ARE #6-20U

Sample Number	Depth (feet)	Permeability Horz (md)	Horz-90° (md)	Vert (md)	Porosity (%)	Saturation Oil (%)	H2O (%)	Grain Density (gm/cc)	Lithology
368	13368.0-69.0	2.3	*	2.6	13.3	8.6	10.4	2.64	Sd,fg,sl/calc
369	13369.0-70.0	4.0	3.8	1.8	12.1	6.9	14.0	2.64	Sd,fg,sl/calc
370	13370.0-71.0	0.50	*	0.73	12.5	7.5	14.4	2.64	Sd,fg,sl/calc
	13371.0 - 13373.0								NOT SUITABLE FOR ANALYSIS
371	13373.0-74.0	0.94	0.91	0.39	12.8	8.1	14.7	2.64	Sd,fg,sl/calc
372	13374.0-75.0	0.61	0.59	0.45	12.5	3.3	19.9	2.64	Sd,fg,sl/calc
373	13375.0-76.0	0.66	0.64	0.44	12.5	3.2	20.0	2.64	Sd,fg,sl/calc
374	13376.0-77.0	2.2	2.0	0.93	12.9	4.5	17.1	2.64	Sd,fg,sl/calc
375	13377.0-78.0	3.0	2.0	1.0	12.8	4.1	18.6	2.64	Sd,fg,sl/calc
376	13378.0-79.0	3.8	3.7	0.44	9.3	5.1	18.5	2.64	Sd,fg,sl/calc
377	13379.0-80.0	6.8	2.4	1.2	12.6	6.2	15.9	2.64	Sd,fg,sl/calc
378	13380.0-81.0	57	*	2.7	13.3	7.8	10.5	2.64	Sd,fg,sl/calc
379	13381.0-82.0	9.9	7.7	0.65	10.9	4.1	17.1	2.64	Sd,fg,calc
380	13382.0-83.0	3.5	3.5	0.34	10.7	7.1	17.8	2.64	Sd,fg,sl/calc
381	13383.0-84.0	1.4	1.4	0.16	9.0	4.1	23.8	2.64	Sd,fg,sl/calc
382	13384.0-85.0	1.9	1.4	0.13	8.7	4.0	23.2	2.64	Sd,fg,calc
383	13385.0-86.0	4.5	4.5	0.77	10.9	5.8	17.1	2.64	Sd,fg,calc
384	13386.0-87.0	1.6	1.4	0.30	10.0	2.7	19.0	2.64	Sd,fg,sl/calc
385	13387.0-88.0	0.75	0.73	0.25	9.7	5.5	20.7	2.64	Sd,fg,sl/calc
386	13388.0-89.0	1.7	1.7	0.26	10.1	6.1	19.0	2.64	Sd,fg,sl/calc
387	13389.0-90.0	0.99	0.94	0.20	9.6	4.4	19.7	2.64	Sd,fg,sl/calc
	13390.0 - 13391.0								NOT SUITABLE FOR ANALYSIS

* Plug permeability - sample not suitable for full diameter measurement

TERRA TEK CORE SERVICES

360 Wakara Way , Salt Lake City, Utah 84108 (801) 584-2480

ANSCHUTZ CORPORATION Date: 12 Mar 1982 TTCS File #: 91
Well: ARE #6-20U

Sample Number	Depth (feet)	Permeability Horz (md)	Horz-90° (md)	Vert (md)	Porosity (%)	Saturation Oil (%)	H2O (%)	Grain Density (gm/cc)	Lithology	
	13391.0 - 13408.0								NOT RECOVERED	
388	13408.0-09.0	0.31	*	0.17	7.5	5.1	21.5	2.64	Sd,fg,sl/calc	
389	13409.0-10.0	0.15	0.15	0.06	6.9	2.8	34.9	2.65	Sd,fg,calc	
390	13410.0-11.0	0.15	0.13	0.06	6.9	4.8	29.6	2.65	Sd,fg,sl/calc	
391	13411.0-12.0	0.23	0.22	0.06	7.6	1.8	26.9	2.65	Sd,fg,calc	
392	13412.0-13.0	3.0+	*	0.58	10.0	3.4	15.1	2.64	Sd,fg,calc	vf
393	13413.0-14.0	1.1	*	0.40	10.5	6.0	15.3	2.64	Sd,fg,calc	
394	13414.0-15.0	7.6	*	0.41	11.4	8.3	15.6	2.64	Sd,fg,sl/calc	
395	13415.0-16.0	2.4	2.3	0.21	10.5	7.8	19.1	2.64	Sd,fg,calc	
396	13416.0-17.0	1.2	1.1	0.26	9.8	7.5	19.7	2.64	Sd,fg,calc	
397	13417.0-18.0	0.55	*	0.10	9.4	3.7	21.3	2.65	Sd,fg,calc	
398	13418.0-19.0	0.25	0.21	0.07	8.2	4.9	28.2	2.65	Sd,fg,calc	
399	13419.0-20.0	0.29	*	0.23	12.4	3.2	11.6	2.66	Sd,fg,calc	vf
400	13420.0-21.0	7.6	*	3.2	13.8	8.4	15.2	2.64	Sd,fg,calc	
401	13421.0-22.0	14	13	1.7	12.4	8.9	20.2	2.65	Sd,fg,sol,calc incl	
402	13422.0-23.0	2.3	*	0.33	10.9	6.7	14.3	2.64	Sd,fg,calc	
403	13423.0-24.0	5.1	*	0.69	11.8	8.2	17.4	2.64	Sd,fg,calc	
404	13424.0-25.0	0.87	0.86	0.18	9.5	8.4	25.1	2.65	Sd,fg,calc	
405	13425.0-26.0	3.4	*	0.40	11.9	10.6	15.0	2.64	Sd,fg,calc	
406	13426.0-27.0	7.1	*	1.3	12.0	7.0	15.7	2.64	Sd,fg,calc	
	13427.0 - 13466.0								NOT RECOVERED	
407	13466.0-67.0	2.6	2.4	0.85	11.9	8.8	19.2	2.64	Sd,fg,sl/calc,calc incl	

* Plug permeability - sample not suitable for full diameter measurement
\+ Horizontal dehydration crack

TERRA TEK CORE SERVICES

360 Wakara Way , Salt Lake City, Utah 84108 (801) 584-2480

ANSCHUTZ CORPORATION Date: 12 Mar 1982 TTCS File #: 91

Well: ARE #6-20U

Sample Number	Depth (feet)	Permeability Horz (md)	Horz-90' (md)	Vert (md)	Porosity (%)	Saturation Oil (%)	H2O (%)	Grain Density (gm/cc)	Lithology	
408	13467.0-68.0	8.6	5.5	34	11.8	12.0	17.6	2.64	Sd,fg,sl/calc	vf
409	13468.0-69.0	7.5	4.7	1.0	11.4	8.9	17.8	2.64	Sd,fg,sl/calc	
410	13469.0-70.0	14	10	1.3	12.4	10.2	17.1	2.64	Sd,fg	
411	13470.0-71.0	9.1	5.9	1.3	12.2	10.0	23.5	2.64	Sd,fg,sl/calc	
412	13471.0-72.0	4.1	3.9	0.43	11.0	8.7	26.9	2.64	Sd,fg,sl/calc	
413	13472.0-73.0	2.1	1.9	0.16	10.4	6.9	27.0	2.64	Sd,fg,sl/calc	
414	13473.0-74.0	1.5	0.42	0.69	7.9	5.9	31.8	2.64	Sd,fg,sl/calc	
415	13474.0-75.0	0.86	0.40	0.18	7.8	7.4	34.7	2.64	Sd,fg,sl/calc	
416	13475.0-76.0	0.45	0.40	0.13	9.3	6.9	38.8	2.65	Sd,fg,sl/calc,lam	
417	13476.0-77.0	0.62	0.53	0.10	9.2	15.9	29.7	2.64	Sd,fg,sl/calc	
418	13477.0-78.0	2.0	1.4	0.13	9.9	7.9	32.3	2.64	Sd,fg,sl/calc	
419	13478.0-79.0	0.68	0.61	0.13	10.0	7.1	33.1	2.65	Sd,fg,sl/calc	
420	13479.0-80.0	1.2	1.1	0.11	9.2	6.9	29.4	2.65	Sd,fg,sl/calc	
421	13480.0-81.0	0.61	0.58	0.01	8.0	7.4	33.8	2.65		
422	13481.0-82.0	0.38	0.35	0.01	8.7	7.0	33.7	2.65	Sd,fg,sl/calc	
423	13482.0-83.0	0.31	*	0.09	9.1	6.7	39.8	2.65	Sd,fg,sl/calc	vf
424	13483.0-84.0	0.36	*	0.10	9.4	11.6	34.2	2.66	Sd,fg,sl/calc	vf
425	13484.0-85.0	2.2	0.43	0.67	9.6	13.5	34.8	2.66	Sd,fg,sl/calc	vf
426	13485.0-86.0	0.65	0.54	0.30	12.1	4.4	27.2	2.65	Sd,fg	
427	13486.0-87.0	2.1	1.7	0.47	12.2	4.3	22.4	2.64	Sd,fg,sl/calc	
428	13487.0-88.0	2.7	2.0	0.57	11.5	2.2	30.1	2.64	Sd,fg,sl/calc	
429	13488.0-89.0	0.79	0.68	0.27	10.4	9.3	29.9	2.64	Sd,fg,sl/calc	

* Plug permeability - sample not suitable for full diameter measurement

TERRA TEK CORE SERVICES

360 Wakara Way , Salt Lake City, Utah 84108 (801) 584-2480

ANSCHUTZ CORPORATION Date: 12 Mar 1982 TTCS File #: 91
Well: ARE #6-20U

Sample Number	Depth (feet)	Permeability Horz (md).	Horz-90' (md)	Vert (md)	Porosity (%)	Saturation Oil (%)	H2O (%)	Grain Density (gm/cc)	Lithology	
430	13489.0-90.0	3.8	2.5	1.4	11.2	9.1	20.9	2.64	Sd,fg,sl/calc	
431	13490.0-91.0	0.21	0.20	0.09	8.2	7.5	43.0	2.65	Sd,fg,sl/calc,lam	
432	13491.0-92.0	2.3	0.08	<0.01	8.1	1.1	43.6	2.64	Sd,fg,sl/calc	
433	13492.0-93.0	7542	0.28	35	8.7	8.7	48.2	2.64	Sd,fg	vf
434	13493.0-94.0	1689	0.40	976	7.7	10.8	68.6	2.64	Sd,fg	vf
435	13494.0-95.0	757	0.09	0.05	7.6	11.0	57.0	2.65	Sd,fg,lam	vf
436	13495.0-96.0	1611	0.08	588	7.7	12.0	55.1	2.65	Sd,fg	vf
437	13496.0-97.0	3.8	3.1	0.79	13.0	7.7	25.0	2.64	Sd,fg,sl/calc	vf
438	13497.0-98.0	6.6	6.3	3.3	12.8	6.3	21.6	2.64	Sd,fg,sl/calc	
439	13498.0-99.0	1.7	1.3	0.79	12.9	8.1	23.9	2.64	Sd,fg,sl/calc	
440	13499.0-00.0	0.90	0.61	0.26	10.0	5.0	34.2	2.64	Sd,fg,sl/calc,calc lam	
441	13500.0-01.0	1026	0.22	43	9.1	8.5	39.0	2.64	Sd,fg,sl/calc	vf
442	13501.0-02.0	802	0.43	814	9.3	6.4	34.3	2.64	Sd,fg	vf
443	13502.0-03.0	529	0.03	430	5.9	20.0	67.0	2.66	Sd,fg	vf
444	13503.0-04.0	1.1	0.80	0.44	13.6	9.1	30.6	2.64	Sd,fg,sl/calc	
445	13504.0-05.0	2.1	1.8	0.98	15.4	7.3	26.1	2.64	Sd,fg,sl/calc	
446	13505.0-06.0	3.9	3.2	1.5	15.3	6.7	22.5	2.64	Sd,fg,sl/calc	
447	13506.0-07.0	0.57	0.50	941	13.7	8.9	27.2	2.65	Sd,fg,sl/calc	
448	13507.0-08.0	0.92	0.86	0.43	14.0	9.3	23.2	2.64	Sd,fg,sl/calc	
449	13508.0-09.0	3.4	3.2	0.27	13.3	7.5	26.6	2.64	Sd,fg,sl/calc	
450	13509.0-10.0	2.7	2.0	0.41	14.2	11.3	20.6	2.64	Sd,fg	
451	13510.0-11.0	3.4	3.3	1.2	15.3	8.5	25.6	2.64	Sd,fg	vf

TERRA TEK CORE SERVICES

360 Wakara Way , Salt Lake City, Utah 84108 (801) 584-2480

ANSCHUTZ CORPORATION Date: 12 Mar 1982 TTCS File #: 91
Well: ARE #6-20U

Sample Number	Depth (feet)	Permeability Horz (md)	Horz-90° (md)	Vert (md)	Porosity (%)	Saturation Oil (%)	H2O (%)	Grain Density (gm/cc)	Lithology	
452	13511.0-12.0	1.3	1.3	0.86	14.4	5.9	26.1	2.64	Sd,fg,sl/calc	
453	13512.0-13.0	1.9	1.6	0.94	14.3	6.4	23.7	2.64	Sd,fg	
454	13513.0-14.0	2.5	2.2	1.3	15.0	7.3	22.2	2.64	Sd,fg,sl/calc	
455	13514.0-15.0	1.8	1.5	0.65	14.8	6.9	29.1	2.64	Sd,fg	
456	13515.0-16.0	6.2	5.2	2.6	16.3	8.7	22.2	2.64	Sd,fg,sl/calc	
457	13516.0-17.0	12	8.7	4.9	17.8	13.7	22.3	2.64	Sd,fg,sl/calc	
458	13517.0-18.0	6.2	5.9	2.6	16.9	7.3	22.3	2.64	Sd,fg,sl/calc	
459	13518.0-19.0	4.8	3.8	2.7	16.0	10.8	19.1	2.64	Sd,fg,sl/calc	
460	13519.0-20.0	4.7	3.7	2.7	14.8	6.2	28.0	2.64	Sd,fg,sl/calc	
461	13520.0-21.0	5.4	4.6	2.5	15.9	7.7	22.4	2.64	Sd,fg,sl/calc	
462	13521.0-22.0	5.3	3.0	0.67	15.7	9.3	24.0	2.64	Sd,fg,sl/calc	
463	13522.0-23.0	4.6	2.9	0.52	14.1	13.6	20.3	2.64	Sd,fg,sl/calc	
464	13523.0-24.0	4.1	3.4	0.41	15.4	5.7	34.1	2.64	Sd,fg,sl/calc	
	13524.0 - 13525.0								NOT SUITABLE FOR ANALYSIS	
	13525.0 - 13526.0								NOT RECOVERED	
465	13526.0-27.0	0.70	0.65	0.28	12.7	9.9	23.2	2.64	Sd,fg,sl/calc	
466	13527.0-28.0	1.4	1.3	0.19	13.1	9.0	17.6	2.64	Sd,fg,sl/calc	
467	13528.0-29.0	0.67	0.56	0.17	11.9	8.0	21.8	2.64	Sd,fg,sl/calc	
468	13529.0-30.0	0.26	0.25	0.07	9.3	5.2	29.8	2.64	Sd,fg,sl/calc	
469	13530.0-31.0	0.15	0.15	0.11	9.6	6.5	24.8	2.65	Sd,fg,sl/calc	
470	13531.0-32.0	3960	0.28	410	6.8	8.3	51.0	2.66	Sd,fg,sl/calc	vf
471	13532.0-33.0	1111	0.08	1268	6.8	4.6	45.3	2.66	Sd,fg,sl/calc	vf

TERRA TEK CORE SERVICES

360 Wakara Way , Salt Lake City, Utah 84108 (801) 584-2480

ANSCHUTZ CORPORATION Date: 12 Mar 1982 TTCS File #: 91
Well: ARE #6-20U

Sample Number	Depth (feet)	Permeability Horz (md)	Horz-90' (md)	Vert (md)	Porosity (%)	Saturation Oil (%)	H2O (%)	Grain Density (gm/cc)	Lithology	
472	13533.0-34.0	633	8.7	748	6.6	12.3	38.3	2.65	Sd,fg,sl/calc	vf
473	13534.0-35.0	627	7.5	662	6.2	5.2	50.4	2.65	Sd,fg	vf
474	13535.0-36.0	1082	0.10	839	7.0	9.4	45.8	2.65	Sd,fg	vf
475	13536.0-37.0	0.10	0.08	0.04	7.8	5.2	39.2	2.65	Sd,fg	
476	13537.0-38.0	1225	0.07	576	7.9	2.5	45.7	2.65	Sd,fg	vf
477	13538.0-39.0	32	0.06	0.09	7.7	2.0	45.3	2.64	Sd,fg	vf
478	13539.0-40.0	1073	0.07	524	8.3	7.3	41.1	2.64	Sd,fg	vf
479	13540.0-41.0	602	0.14	3763	8.4	5.2	40.1	2.64	Sd,fg	vf
480	13541.0-42.0	1284	0.06	1013	8.6	3.2	31.0	2.64	Sd,fg	vf
481	13542.0-43.0	3.6+	0.15	0.09	9.7	3.5	28.5	2.64	Sd,fg	
482	13543.0-44.0	0.13	0.10	0.07	10.3	3.9	24.6	2.64	Sd,fg	
483	13544.0-45.0	0.23	0.21	0.11	11.0	5.4	22.8	2.64	Sd,fg,sl/calc	
484	13545.0-46.0	0.20	0.17	0.14	11.5	4.9	20.6	2.64	Sd,fg,sl/calc	
485	13546.0-47.0	0.15	0.13	0.09	10.4	6.9	25.3	2.64	Sd,fg,sl/calc	
486	13547.0-48.0	1.4	1.2	1.1	13.9	7.1	18.3	2.64	Sd,fg,sl/calc	
487	13548.0-49.0	0.85	0.68	0.46	13.4	6.1	20.4	2.64	Sd,fg,sl/calc	
488	13549.0-50.0	3.4	2.2	1.2	13.9	6.6	16.5	2.64	Sd,fg,sl/calc	
489	13550.0-51.0	2.9	2.8	2.1	13.9	7.3	17.1	2.64	Sd,fg,sl/calc	
490	13551.0-52.0	2.1	1.8	1.1	14.2	7.2	16.7	2.64	Sd,fg,sl/calc	
491	13552.0-53.0	2.5	2.1	0.65	13.7	6.3	16.9	2.64	Sd,fg,sl/calc	
492	13553.0-54.0	3.0	2.6	0.35	14.8	6.7	16.9	2.64	Sd,fg,sl/calc	
493	13554.0-55.0	2.7	2.6	0.88	14.1	7.7	15.8	2.64	Sd,fg,sl/calc	

+ Horizontal dehydration crack

TERRA TEK CORE SERVICES

360 Wakara Way , Salt Lake City, Utah 84108 (801) 584-2480

ANSCHUTZ CORPORATION Date: 12 Mar 1982 TTCS File #: 91
Well: ARE #6-20U

Sample Number	Depth (feet)	Permeability Horz (md)	Horz-90' (md)	Vert (md)	Porosity (%)	Saturation Oil (%)	H2O (%)	Grain Density (gm/cc)	Lithology
494	13555.0-56.0	1.3	1.2	0.67	13.6	6.3	17.7	2.64	Sd,fg,sl/calc
495	13556.0-57.0	18	1.2	1.2	14.0	9.7	16.3	2.64	Sd,fg,sl/calc
496	13557.0-58.0	1.5	1.3	0.39	13.0	7.3	17.4	2.64	Sd,fg,sl/calc
497	13558.0-59.0	1.3	1.2	0.55	13.2	6.0	18.7	2.64	Sd,fg,sl/calc
498	13559.0-60.0	5.3	4.3	2.5	14.6	6.3	16.1	2.64	Sd,fg,sl/calc
499	13560.0-61.0	3.5	2.8	1.7	14.6	7.7	17.2	2.64	Sd,fg,sl/calc
500	13561.0-62.0	1.2	0.79	0.34	13.0	6.8	19.4	2.64	Sd,fg,sl/calc
501	13562.0-63.0	3.0	2.7	1.1	13.8	6.3	17.3	2.64	Sd,fg,sl/calc
502	13563.0-64.0	2.6	2.2	1.1	14.6	5.5	17.4	2.65	Sd,fg,sl/calc
503	13564.0-65.0	2.9	2.5	1.7	14.8	6.7	15.2	2.64	Sd,fg,sl/calc
504	13565.0-66.0	2.9	2.6	1.4	14.9	8.1	14.7	2.64	Sd,fg,sl/calc
505	13566.0-67.0	4.4	3.4	0.51	13.0	5.7	18.9	2.64	Sd,fg
506	13567.0-68.0	2.9	2.4	1.4	16.3	7.0	14.0	2.64	Sd,fg
507	13568.0-69.0	3.7	3.6	2.4	16.5	6.0	16.3	2.64	Sd,fg
508	13569.0-70.0	2.4	2.0	1.3	14.0	5.3	17.9	2.64	Sd,fg
509	13570.0-71.0	2.8	2.3	0.97	13.8	8.2	14.5	2.64	Sd,fg
510	13571.0-72.0	4.2	3.3	0.96	13.6	6.6	15.7	2.64	Sd,m-fg
511	13572.0-73.0	1.8	1.5	0.64	13.3	5.0	17.7	2.64	Sd,m-fg
512	13573.0-74.0	2.2	1.7	0.80	13.4	5.7	15.9	2.64	Sd,fg
513	13574.0-75.0	4.0	3.2	1.5	14.1	4.8	17.6	2.64	Sd,fg
514	13575.0-76.0	7.1	6.1	1.8	14.1	5.2	16.3	2.64	Sd,fg
515	13576.0-77.0	7.0	5.5	1.9	14.5	5.1	14.1	2.64	Sd,fg

TERRA TEK CORE SERVICES

360 Wakara Way , Salt Lake City, Utah 84108 (801) 584-2480

ANSCHUTZ CORPORATION Date: 12 Mar 1982 TTCS File #: 91
Well: ARE #6-20U

Sample Number	Depth (feet)	Permeability Horz (md)	Horz-90° (md)	Vert (md)	Porosity (%)	Saturation Oil (%)	H2O (%)	Grain Density (gm/cc)	Lithology	
516	13577.0-78.0	6.5	5.9	2.6	15.0	4.7	14.6	2.64	Sd,fg,sl/calc	
517	13578.0-79.0	12	11	0.76	12.5	5.2	15.4	2.64	Sd,fg	
518	13579.0-80.0	4.8	4.7	1.1	14.5	4.2	13.7	2.64	Sd,fg	
519	13580.0-81.0	4.0	3.9	1.0	13.6	5.5	14.6	2.64	Sd,fg	
520	13581.0-82.0	312	1.8	850	10.2	9.3	24.2	2.64	Sd,fg	vf
521	13582.0-83.0	0.88	0.64	0.24	10.0	6.5	15.7	2.64	Sd,fg	
522	13583.0-84.0	0.44	0.44	0.19	9.8	5.5	17.0	2.64	Sd,fg	
523	13584.0-85.0	0.30	0.26	0.09	8.8	8.4	16.8	2.64	Sd,fg	
524	13585.0-86.0	4.5+	4.5	0.13	9.7	8.7	18.3	2.64	Sd,fg	
525	13586.0-87.0	0.27	0.24	0.08	8.2	7.1	16.2	2.64	Sd,fg	
526	13587.0-88.0	0.83	0.31	0.14	8.0	8.5	18.0	2.64	Sd,fg,sl/calc	vf
527	13588.0-89.0	0.19	0.18	0.06	7.6	8.4	19.1	2.64	Sd,fg	
528	13589.0-90.0	0.12	0.10	0.11	7.7	6.5	18.0	2.65	Sd,fg	vf
529	13590.0-91.0	0.13	0.13	0.05	7.5	8.1	20.0	2.65	Sd,fg	
530	13591.0-92.0	0.24	0.22	0.13	9.8	5.5	18.3	2.64	Sd,fg	vf
531	13592.0-93.0	0.18	0.17	0.11	9.4	7.2	17.4	2.64	Sd,fg	
532	13593.0-94.0	0.29	0.26	0.16	10.5	7.5	14.8	2.64	Sd,fg	
533	13594.0-95.0	0.29	0.28	0.15	10.8	5.1	18.0	2.64	Sd,fg,lam	
534	13595.0-96.0	0.84	0.73	0.16	10.4	6.3	24.1	2.64	Sd,fg,lam	
535	13596.0-97.0	0.82	0.74	0.32	12.4	6.5	15.8	2.64	Sd,fg	
536	13597.0-98.0	1.0	0.93	0.47	11.8	6.8	19.2	2.64	Sd,fg	
537	13598.0-99.0	0.92	0.89	0.29	11.7	6.2	13.4	2.64	Sd,fg	

+ Horizontal dehydration crack

TERRA TEK CORE SERVICES

360 Wakara Way , Salt Lake City, Utah 84108 (801) 584-2480

ANSCHUTZ CORPORATION
Well: ARE #6-20U

Date: 12 Mar 1982

TTCS File #: 91

Sample Number	Depth (feet)	Permeability Horz (md)	Permeability Horz-90° (md)	Permeability Vert (md)	Porosity (%)	Saturation Oil (%)	Saturation H2O (%)	Grain Density (gm/cc)	Lithology
538	13599.0-00.0	0.22	0.21	0.12	10.8	6.8	16.2	2.64	Sd,fg
539	13600.0-01.0	0.67	*	0.35	11.6	9.4	14.0	2.64	Sd,fg
540	13601.0-02.0	0.57	0.44	0.23	10.0	8.3	15.1	2.64	Sd,fg
541	13602.0-03.0	3.1+	3.1	0.08	9.2	10.0	15.8	2.64	Sd,fg
542	13603.0-04.0	0.87	0.53	0.30	12.4	5.4	15.0	2.64	Sd,fg
543	13604.0-05.0	1.1	0.36	0.20	11.8	6.2	18.1	2.64	Sd,fg
544	13605.0-06.0	0.32	0.30	0.14	11.0	6.1	19.6	2.64	Sd,fg
545	13606.0-07.0	0.41	0.39	0.25	11.9	6.9	15.8	2.64	Sd,fg vf
546	13607.0-08.0	0.59	0.53	0.22	11.5	4.5	16.3	2.64	Sd,fg
547	13608.0-09.0	0.70	0.68	0.15	10.9	6.3	15.3	2.64	Sd,fg
548	13609.0-10.0	81+	11	0.40	12.8	6.5	17.7	2.64	Sd,fg
549	13610.0-11.0	0.74	0.64	0.22	10.8	8.1	15.7	2.64	Sd,fg
550	13611.0-12.0	0.29	0.25	0.08	10.0	7.1	18.1	2.64	Sd,fg
551	13612.0-13.0	0.33	0.27	0.12	10.2	6.9	18.3	2.64	Sd,fg
552	13613.0-14.0	0.67	0.40	0.27	10.6	8.5	16.3	2.64	Sd,fg
553	13614.0-15.0	4.1+	0.23	0.05	5.9	8.2	54.2	2.65	Sd,fg
554	13615.0-16.0	0.55	0.38	0.09	8.7	7.3	41.1	2.64	Sd,fg,sl/calc,lam
555	13616.0-17.0	0.23	0.11	0.25	7.0	9.1	63.0	2.65	Sd,fg,sl,calc
556	13617.0-18.0	11	0.58	2.4	12.2	4.1	29.4	2.64	Sd,fg,sl,calc
557	13618.0-19.0	1.2	0.91	1.2	12.5	7.8	26.4	2.64	Sd,fg,sl/calc
558	13619.0-20.0	1.1	0.86	1.4	13.0	5.9	19.7	2.64	Sd,fg,sl/calc
559	13620.0-21.0	2.7	2.6	1.1	13.7	4.2	19.9	2.64	Sd,fg,sl/calc

* Plug permeability - sample not suitable for full diameter measurement
+ Horizontal dehydration crack

TERRA TEK CORE SERVICES

360 Wakara Way , Salt Lake City, Utah 84108 (801) 584-2480

ANSCHUTZ CORPORATION Date: 12 Mar 1982 TTCS File #: 91
Well: ARE #6-20U

Sample Number	Depth (feet)	Permeability Horz (md)	Horz-90° (md)	Vert (md)	Porosity (%)	Saturation Oil (%)	H2O (%)	Grain Density (gm/cc)	Lithology
560	13621.0-22.0	2.8	2.4	1.8	12.5	6.6	20.6	2.64	Sd,fg,lam
561	13622.0-23.0	4.1	3.0	0.88	14.3	5.2	17.6	2.64	Sd,fg,sl/calc
562	13623.0-24.0	4.7	2.9	0.56	12.1	5.9	23.2	2.64	Sd,fg,sl/calc
563	13624.0-25.0	2.1	1.5	1.2	13.0	7.2	15.6	2.64	Sd,fg,sl/calc
564	13625.0-26.0	2.5	1.9	0.47	11.5	5.0	20.3	2.64	Sd,fg,sl/calc
565	13626.0-27.0	0.77	0.71	0.60	12.4	7.0	19.4	2.64	Sd,fg,sl/calc
566	13627.0-28.0	11	8.0	0.59	10.1	11.0	21.7	2.64	Sd,fg,sl/calc
567	13628.0-29.0	5.7	4.8	0.46	10.5	13.1	19.3	2.64	Sd,fg,sl/calc,lam
568	13629.0-30.0	0.67	0.50	0.31	11.5	15.3	12.8	2.64	Sd,fg,sl/calc
569	13630.0-31.0	0.59	0.57	0.72	11.5	7.5	14.1	2.64	Sd,fg,sl/calc
570	13631.0-32.0	0.62	0.44	0.42	11.5	8.0	11.4	2.64	Sd,fg,sl/calc
571	13632.0-33.0	6.4	4.3	0.66	10.6	9.5	11.8	2.64	Sd,fg,sl/calc
572	13633.0-34.0	3.0	2.3	0.92	12.5	7.6	18.2	2.64	Sd,fg,sl/calc
573	13634.0-35.0	1.5	1.3	0.83	12.6	4.6	20.5	2.64	Sd,fg,sl/calc
574	13635.0-36.0	1.3	0.90	0.57	13.0	6.8	17.3	2.64	Sd,fg,sl/calc
575	13636.0-37.0	2.8	2.1	0.64	12.2	6.6	12.4	2.64	Sd,fg,sl/calc
576	13637.0-38.0	1.6	1.5	0.76	13.5	6.9	18.3	2.64	Sd,fg,sl/calc
577	13638.0-39.0	2.3	2.1	0.53	13.1	10.5	27.8	2.64	Sd,fg,sl/calc
578	13639.0-40.0	0.73	0.56	0.86	13.2	9.3	14.6	2.64	Sd,fg,sl/calc
579	13640.0-41.0	4.5	3.0	0.60	15.4	7.2	27.3	2.64	Sd,fg,sl/calc
580	13641.0-42.0	3.5	3.1	0.67	15.3	6.8	14.2	2.64	Sd,fg,sl/calc
581	13642.0-43.0	2.1	1.9	1.3	15.2	6.6	23.8	2.64	Sd,fg,sl/calc

TERRA TEK CORE SERVICES

360 Wakara Way , Salt Lake City, Utah 84108 (801) 584-2480

ANSCHUTZ CORPORATION Date: 12 Mar 1982 TTCS File #: 91
Well: ARE #6-20U

Sample Number	Depth (feet)	Permeability Horz (md)	Horz-90° (md)	Vert (md)	Porosity (%)	Saturation Oil (%)	H2O (%)	Grain Density (gm/cc)	Lithology	
582	13643.0-44.0	0.18	0.14	0.95	7.7	7.9	45.4	2.65	Sd,fg,sl/calc	
583	13644.0-45.0	2.9	2.6	0.47	13.7	6.2	20.5	2.64	Sd,fg,sl/calc	
584	13645.0-46.0	4.5	4.3	0.89	11.9	5.8	20.8	2.66	Sd,fg,sl/calc	
585	13646.0-47.0	1.7	1.7	0.93	14.7	8.3	16.9	2.64	Sd,fg,sl/calc	
586	13647.0-48.0	3.0	2.9	0.21	8.2	10.1	49.1	2.65	Sd,fg,sl/calc	
587	13648.0-49.0	28	*	10	16.5	7.8	14.7	2.65	Sd,fg,sl/calc	
588	13649.0-50.0	24	22	0.26	12.6	9.0	21.7	2.64	Sd,fg,sl/calc	
589	13650.0-51.0	0.36	0.35	0.17	8.5	8.4	50.3	2.66	Sd,fg,sl/calc	
590	13651.0-52.0	0.34	0.32	0.11	6.0	0.0	78.6	2.66	Sd,fg	
591	13652.0-53.0	0.16	0.15	0.07	6.5	0.0	52.3	2.65	Sd,fg	
592	13653.0-54.0	0.14	0.14	0.06	6.2	0.0	76.2	2.65	Sd,fg,lam	
593	13654.0-55.0	0.34	0.20	0.07	5.9	0.0	76.3	2.66	Sd,fg,lam	
594	13655.0-56.0	0.14	0.12	0.05	5.4	0.0	78.5	2.65	Sd,fg,lam	
595	13656.0-57.0	0.33	0.21	0.05	5.2	0.0	64.8	2.65	Sd,fg	
596	13657.0-58.0	4.3+	0.09	0.07	4.7	0.0	92.1	2.65	Sd,fg	
597	13658.0-59.0	0.08	0.08	0.07	6.9	0.0	83.0	2.65	Sd,fg	
598	13659.0-60.0	0.09	0.09	0.08	7.4	0.0	82.4	2.65	Sd,fg	
599	13660.0-61.0	0.09	0.07	0.07	7.3	0.0	84.3	2.65	Sd,fg	
600	13661.0-62.0	0.10	0.08	0.08	6.2	0.0	77.5	2.65	Sd,fg	
601	13662.0-63.0	9.9+	0.15	0.27	5.7	0.0	88.2	2.67	Sd,fg	vf
602	13663.0-64.0	0.10	0.08	0.06	6.2	0.0	87.1	2.67	Sd,fg	
603	13664.0-65.0	0.31	0.20	0.10	6.9	0.0	87.1	2.66	Sd,fg	

* Plug permeability - sample not suitable for full diameter measurement
\+ Horizontal dehydration crack

TERRA TEK CORE SERVICES

360 Wakara Way , Salt Lake City, Utah 84108 (801) 584-2480

ANSCHUTZ CORPORATION Date: 12 Mar 1982 TTCS File #: 91
Well: ARE #6-20U

Sample Number	Depth (feet)	Permeability Horz (md)	Horz-90° (md)	Vert (md)	Porosity (%)	Saturation Oil (%)	H2O (%)	Grain Density (gm/cc)	Lithology	
604	13665.0-66.0	0.29	0.19	0.14	7.6	0.0	84.7	2.65	Sd,fg	
	13666.0 - 13668.0								NOT SUITABLE FOR ANALYSIS	
605	13668.0-69.0	0.11	*	0.06	4.8	0.0	93.4	2.66	Sd,fg	vf
606	13669.0-70.0	2686	0.08	4500	4.1	0.0	97.8	2.65	Sd,fg	vf
607	13670.0-71.0	1834	0.14	2938	5.3	0.0	80.6	2.64	Sd,fg	vf
608	13671.0-72.0	0.53	0.14	0.15	4.5	0.0	94.8	2.65	Sd,fg	vf
609	13672.0-73.0	0.19	0.16	0.03	5.2	0.0	92.8	2.64	Sd,fg	
610	13673.0-74.0	0.05	0.03	0.04	5.6	0.0	87.7	2.65	Sd,fg	
611	13674.0-75.0	0.20	0.03	0.04	5.8	0.0	88.4	2.65	Sd,fg	
612	13675.0-76.0	0.09	0.07	0.04	6.6	0.0	89.3	2.65	Sd,fg	
613	13676.0-77.0	1849	9.8	3906	8.3	0.0	80.3	2.65	Sd,fg	vf
614	13677.0-78.0	0.31	0.11	0.07	8.1	0.0	81.9	2.65	Sd,fg	
615	13678.0-79.0	0.09	0.05	0.05	6.5	0.0	86.1	2.65	Sd,fg	
616	13679.0-80.0	1648	0.06	8099	5.9	0.0	85.7	2.65	Sd,fg	vf
617	13680.0-81.0	0.05	0.05	0.06	5.8	0.0	87.1	2.66	Sd,fg	
618	13681.0-82.0	0.06	0.02	0.03	5.4	0.0	86.5	2.66	Sd,fg	vf
619	13682.0-83.0	2317	0.05	1140	5.2	0.0	85.9	2.66	Sd,fg	vf
620	13683.0-84.0	1405	0.05	92	5.2	0.0	87.1	2.65	Sd,fg	vf
621	13684.0-85.0	0.08	0.03	0.05	4.9	0.0	95.6	2.65	Sd,fg	vf
622	13685.0-86.0	0.46	0.06	0.05	5.2	0.0	94.1	2.65	Sd,fg	vf
623	13686.0-87.0	0.06	0.03	0.05	4.6	0.0	95.0	2.65	Sd,fg	
624	13687.0-88.0	1478	0.03	107	4.8	0.0	94.9	2.66	Sd,fg	vf

* Plug permeability - sample not suitable for full diameter measurement

TERRA TEK CORE SERVICES

360 Wakara Way , Salt Lake City, Utah 84108 (801) 584-2480

ANSCHUTZ CORPORATION Date: 12 Mar 1982 TTCS File #: 91

Well: ARE #6-20U

Sample Number	Depth (feet)	Permeability Horz (md)	Horz-90° (md)	Vert (md)	Porosity (%)	Saturation Oil (%)	H2O (%)	Grain Density (gm/cc)	Lithology	
625	13688.0-89.0	1.1	0.03	0.05	3.3	0.0	98.6	2.67	Sd,fg	vf
626	13689.0-90.0	0.04	0.03	0.05	4.1	0.0	90.5	2.66	Sd,fg	vf
627	13690.0-91.0	0.15	0.12	134	4.4	0.0	93.3	2.65	Sd,fg	vf
628	13691.0-92.0	0.03	0.03	0.03	4.3	0.0	91.8	2.66	Sd,fg	
629	13692.0-93.0	0.08	0.04	0.02	4.5	0.0	87.7	2.69	Sd,fg	
630	13693.0-94.0	0.05	*	0.04	4.8	0.0	91.8	2.66	Sd,fg	vf
631	13694.0-95.0	0.09	0.08	0.07	6.8	0.0	93.4	2.65	Sd,fg	
632	13695.0-96.0	0.03	<0.01	0.04	5.5	0.0	54.3	2.65	Sd,fg	
633	13696.0-97.0	0.14	0.06	0.04	4.9	0.0	94.4	2.66	Sd,fg	
634	13697.0-98.0	0.04	0.02	385	4.3	0.0	91.2	2.66	Sd,fg	vf
635	13698.0-99.0	144	0.21	320	3.9	0.0	91.4	2.66	Sd,fg	vf
636	13699.0-00.0	0.03	0.02	336	3.9	0.0	90.5	2.67	Sd,fg	vf
637	13700.0-01.0	0.04	0.03	0.09	3.6	0.0	94.9	2.66	Sd,fg	vf
638	13701.0-02.0	0.04	0.02	0.03	3.1	0.0	95.8	2.66	Sd,fg	
639	13702.0-03.0	0.04	0.03	0.03	3.3	0.0	91.2	2.66	Sd,fg	
640	13703.0-04.0	18+	0.16	0.03	3.7	0.0	91.3	2.66	Sd,fg	
	13704.0 - 13705.0								NOT SUITABLE FOR ANALYSIS	
641	13705.0-06.0	0.04	*	0.04	3.6	0.0	90.7	2.67	Sd,fg	vf
									BEGINNING OF SIDETRACK CORE	
642	13700.0-01.0	0.22+	0.17	0.04	6.3	0.0	63.2	2.64	Sd,fg	
643	13701.0-02.0	0.09	0.09	0.07	8.6	0.0	53.3	2.64	Sd,fg	
644	13702.0-03.0	0.11	0.10	0.10	9.0	0.0	51.5	2.64	Sd,fg	

* Plug permeability - sample not suitable for full diameter measurement
\+ Horizontal dehydration crack

TERRA TEK CORE SERVICES

360 Wakara Way , Salt Lake City, Utah 84108 (801) 584-2480

ANSCHUTZ CORPORATION Date: 12 Mar 1982 TTCS File #: 91
Well: ARE #6-20U

Sample Number	Depth (feet)	Permeability Horz (md)	Horz-90° (md)	Vert (md)	Porosity (%)	Saturation Oil (%)	H2O (%)	Grain Density (gm/cc)	Lithology	
645	13703.0-04.0	0.08	0.05	0.05	6.6	0.0	65.1	2.65	Sd,fg	vf
646	13704.0-05.0	0.06	0.04	0.05	6.1	0.0	65.8	2.65	Sd,fg	
647	13705.0-06.0	77	0.03	109	3.6	0.0	77.3	2.67	Sd,fg	vf
648	13706.0-07.0	0.05	0.04	0.03	3.7	0.0	81.7	2.66	Sd,fg	vf
649	13707.0-08.0	0.10	0.08	0.03	3.5	0.0	80.1	2.67	Sd,fg	
650	13708.0-09.0	0.06	0.05	0.04	4.1	0.0	72.3	2.65	Sd,fg	
651	13709.0-10.0	0.05	0.03	0.03	4.5	0.0	67.9	2.65	Sd,fg	
652	13710.0-11.0	0.04	0.03	0.03	4.2	0.0	73.8	2.65	Sd,fg	
653	13711.0-12.0	0.08	0.04	0.04	4.6	0.0	77.1	2.65	Sd,fg	vf
654	13712.0-13.0	14	0.03	0.05	3.7	0.0	81.4	2.66	Sd,fg	vf
655	13713.0-14.0	107	0.04	45	4.1	0.0	79.3	2.64	Sd,fg	vf
656	13714.0-15.0	93	0.03	105	3.9	0.0	85.4	2.65	Sd,fg	vf
657	13715.0-16.0	278	0.07	265	4.6	0.0	76.7	2.65	Sd,fg	vf
658	13716.0-17.0	0.27+	0.03	0.03	4.4	0.0	70.7	2.65	Sd,fg	
659	13717.0-18.0	0.05	0.04	0.03	3.4	0.0	75.1	2.65	Sd,fg	
660	13718.0-19.0	939	0.07	1208	4.9	0.0	77.0	2.65	Sd,fg	vf
661	13719.0-20.0	0.04	0.02	0.04	4.7	0.0	68.9	2.65	Sd,fg	
662	13720.0-21.0	0.05	0.03	0.04	5.2	0.0	73.2	2.65	Sd,fg	
663	13721.0-22.0	57	0.06	112	5.0	0.0	73.2	2.66	Sd,fg	vf
664	13722.0-23.0	54	0.04	6.4	4.5	0.0	79.7	2.65	Sd,fg	vf
665	13723.0-24.0	0.03	0.03	136	3.7	0.0	79.4	2.65	Sd,fg	vf
666	13724.0-25.0	0.03	0.03	0.02	4.2	0.0	66.8	2.65	Sd,fg	vf

+ Horizontal dehydration crack

TERRA TEK CORE SERVICES

360 Wakara Way , Salt Lake City, Utah 84108 (801) 584-2480

ANSCHUTZ CORPORATION Date: 12 Mar 1982 TTCS File #: 91

Well: ARE #6-20U

Sample Number	Depth (feet)	Permeability Horz (md)	Horz-90° (md)	Vert (md)	Porosity (%)	Saturation Oil (%)	H2O (%)	Grain Density (gm/cc)	Lithology	
667	13725.0-26.0	0.04	0.03	0.02	3.3	0.0	80.4	2.65	Sd,fg	
668	13726.0-27.0	0.02	0.02	0.02	3.1	0.0	81.2	2.65	Sd,fg	
669	13727.0-28.0	0.04	0.03	0.03	2.7	0.0	81.7	2.65	Sd,fg	
670	13728.0-29.0	521	0.04	887	3.0	0.0	91.3	2.65	Sd,fg	vf
671	13729.0-30.0	134	0.04	407	3.4	0.0	81.8	2.65	Sd,fg	vf
672	13730.0-31.0	41	0.03	329	3.7	0.0	77.9	2.65	Sd,fg	vf
673	13731.0-32.0	633	0.03	1208	3.7	0.0	80.2	2.65	Sd,fg	vf
674	13732.0-33.0	210	0.03	857	3.5	0.0	78.7	2.65	Sd,fg	vf
675	13733.0-34.0	0.06	0.05	0.05	3.2	0.0	77.4	2.65	Sd,fg	
676	13734.0-35.0	0.03	0.02	0.03	4.2	0.0	74.6	2.65	Sd,fg	
677	13735.0-36.0	0.05	0.04	0.03	4.2	0.0	75.4	2.65	Sd,fg	
678	13736.0-37.0	0.05	0.04	0.02	3.5	0.0	77.6	2.65	Sd,fg	
679	13737.0-38.0	0.05	0.03	0.01	3.2	0.0	77.4	2.65	Sd,fg	
680	13738.0-39.0	1650	0.05	362	3.8	0.0	73.5	2.65	Sd,fg	vf
681	13739.0-40.0	0.02	0.02	0.02	3.6	0.0	71.4	2.65	Sd,fg	
682	13740.0-41.0	0.05	0.04	0.03	3.7	0.0	76.7	2.65	Sd,fg	
683	13741.0-42.0	0.09	0.07	0.03	2.7	0.0	78.0	2.66	Sd,fg	
684	13742.0-43.0	1541	0.04	441	3.2	0.0	80.0	2.64	Sd,fg	vf
685	13743.0-44.0	0.08	0.07	0.02	3.3	0.0	75.8	2.66	Sd,fg	
686	13744.0-45.0	0.07	0.06	0.03	3.1	0.0	72.0	2.65	Sd,fg	
687	13745.0-46.0	425	0.07	351	3.1	0.0	78.4	2.66	Sd,fg	vf
688	13746.0-47.0	61	0.07	0.15	2.3	0.0	79.2	2.67	Sd,fg	vf

TERRA TEK CORE SERVICES

360 Wakara Way , Salt Lake City, Utah 84108 (801) 584-2480

ANSCHUTZ CORPORATION
Well: ARE #6-20U

Date: 12 Mar 1982

TTCS File #: 91

Sample Number	Depth (feet)	Permeability Horz (md)	Permeability Horz-90° (md)	Permeability Vert (md)	Porosity (%)	Saturation Oil (%)	Saturation H2O (%)	Grain Density (gm/cc)	Lithology	
689	13747.0-48.0	0.07	0.05	0.04	3.4	0.0	79.3	2.66	Sd,fg	
690	13748.0-49.0	0.08	0.07	879	4.2	0.0	80.8	2.66	Sd,fg	vf
691	13749.0-50.0	0.15	0.08	1698	4.5	0.0	79.2	2.65	Sd,fg	vf
692	13750.0-51.0	0.20	0.15	1603	4.5	0.0	77.7	2.65	Sd,fg	vf
693	13751.0-52.0	0.05	0.03	0.04	4.5	0.0	68.2	2.66	Sd,fg	vf
694	13752.0-53.0	0.11	0.09	0.04	4.1	0.0	81.9	2.66	Sd,fg	vf
	13753.0 - 13760.0								NOT RECOVERED	
695	13760.0-61.0	0.04	0.03	0.02	4.0	0.0	73.9	2.66	Sd,fg	
696	13761.0-62.0	0.08	0.07	0.02	4.2	0.0	73.3	2.65	Sd,fg	
697	13762.0-63.0	0.03	0.02	0.03	4.6	0.0	61.8	2.65	Sd,fg	
698	13763.0-64.0	0.04	0.03	<0.01	4.4	0.0	65.5	2.65	Sd,fg	vf
699	13764.0-65.0	0.04	0.03	0.03	3.9	0.0	62.6	2.65	Sd,fg	
700	13765.0-66.0	0.04	0.03	0.03	4.2	0.0	68.7	2.66	Sd,fg	
701	13766.0-67.0	0.03	0.01	0.03	5.0	0.0	78.6	2.64	Sd,fg	
702	13767.0-68.0	0.03	0.03	0.02	5.1	0.0	61.5	2.65	Sd,fg	
703	13768.0-69.0	0.03	0.03	0.03	5.5	0.0	61.6	2.65	Sd,fg	
704	13769.0-70.0	0.10	0.03	0.02	5.4	0.0	58.8	2.65	Sd,fg	
705	13770.0-71.0	0.12	0.09	0.12	5.5	0.0	61.4	2.65	Sd,fg	vf
706	13771.0-72.0	0.15	0.14	312	5.6	0.0	64.7	2.65	Sd,fg	vf
707	13772.0-73.0	0.07	0.06	0.03	5.5	0.0	61.6	2.65	Sd,fg	vf
708	13773.0-74.0	0.05	0.04	0.03	5.7	0.0	56.8	2.65	Sd,fg	
709	13774.0-75.0	0.04	0.03	<0.01	5.5	0.0	62.5	2.65	Sd,fg	

TERRA TEK CORE SERVICES

360 Wakara Way , Salt Lake City, Utah 84108 (801) 584-2480

ANSCHUTZ CORPORATION Date: 12 Mar 1982 TTCS File #: 91

Well: ARE #6-20U

Sample Number	Depth (feet)	Permeability Horz (md)	Horz-90° (md)	Vert (md)	Porosity (%)	Saturation Oil (%)	H2O (%)	Grain Density (gm/cc)	Lithology	
710	13775.0-76.0	0.03	0.02	0.01	5.6	0.0	61.3	2.65	Sd,fg	
711	13776.0-77.0	0.04	0.03	<0.01	6.0	0.0	59.0	2.65	Sd,fg	
712	13777.0-78.0	0.03	0.03	<0.01	6.0	0.0	58.5	2.65	Sd,fg	
713	13778.0-79.0	0.09	0.05	0.06	7.1	0.0	51.7	2.65	Sd,fg	
714	13779.0-80.0	0.03	0.03	0.02	6.4	0.0	53.9	2.65	Sd,fg	
715	13780.0-81.0	0.04	0.03	364	7.0	0.0	59.8	2.64	Sd,fg	vf
716	13781.0-82.0	0.06	0.04	0.02	6.7	0.0	57.7	2.65	Sd,fg	vf
717	13782.0-83.0	0.04	0.03	<0.01	6.7	0.0	59.4	2.65	Sd,fg	
718	13783.0-84.0	0.22	0.07	0.13	6.5	0.0	66.5	2.65	Sd,fg	vf
719	13784.0-85.0	0.71	0.05	0.02	5.9	0.0	62.6	2.65	Sd,fg	vf
720	13785.0-86.0	0.12	0.07	382	6.2	0.0	65.9	2.65	Sd,fg	vf
721	13786.0-87.0	0.10	0.10	0.05	6.8	0.0	55.8	2.65	Sd,fg	
722	13787.0-88.0	0.13	0.12	0.08	6.4	0.0	57.9	2.65	Sd,fg	
723	13788.0-89.0	0.10	0.08	0.06	5.7	0.0	56.3	2.65	Sd,fg	
724	13789.0-90.0	0.07	0.05	0.03	7.3	0.0	59.1	2.65	Sd,fg	vf
725	13790.0-91.0	0.09	0.08	0.06	8.6	0.0	45.4	2.65	Sd,fg	vf
726	13791.0-92.0	0.13	0.10	0.03	8.1	0.0	55.8	2.65	Sd,fg	
727	13792.0-93.0	0.11	0.08	0.06	8.5	0.0	51.8	2.65	Sd,fg	
728	13793.0-94.0	0.14	0.10	0.04	8.6	0.0	56.6	2.65	Sd,fg	
729	13794.0-95.0	0.07	0.05	0.06	8.6	0.0	58.6	2.65	Sd,fg	
730	13795.0-96.0	0.08	0.06	0.05	8.4	0.0	58.4	2.64	Sd,fg	
731	13796.0-97.0	0.10	0.08	0.05	8.6	0.0	55.2	2.65	Sd,fg	

TERRA TEK CORE SERVICES

360 Wakara Way , Salt Lake City, Utah 84108 (801) 584-2480

ANSCHUTZ CORPORATION Date: 12 Mar 1982 TTCS File #: 91
Well: ARE #6-20U

Sample Number	Depth (feet)	Permeability Horz (md)	Horz-90° (md)	Vert (md)	Porosity (%)	Saturation Oil (%)	H2O (%)	Grain Density (gm/cc)	Lithology	
732	13797.0-98.0	0.09	0.09	0.06	8.5	0.0	54.9	2.65	Sd,fg	
733	13798.0-99.0	82	0.07	0.10	8.3	0.0	57.5	2.65	Sd,fg	vf
734	13799.0-00.0	41+	1.3	0.04	8.6	0.0	48.3	2.65	Sd,fg	
735	13800.0-01.0	0.10	0.08	0.07	8.5	0.0	50.1	2.65	Sd,fg	
736	13801.0-02.0	0.12	0.09	0.03	8.2	0.0	51.7	2.65	Sd,fg	
737	13802.0-03.0	13+	0.58	0.04	7.5	0.0	54.1	2.65	Sd,fg	
738	13803.0-04.0	0.07	0.06	0.08	7.6	0.0	48.3	2.65	Sd,fg	
739	13804.0-05.0	0.09	0.06	0.04	6.7	0.0	58.3	2.66	Sd,fg,lam	
740	13805.0-06.0	0.09	0.07	789	7.1	0.0	59.2	2.65	Sd,fg	vf
741	13806.0-07.0	0.24	0.08	0.04	6.9	0.0	57.0	2.66	Sd,fg,lam	
742	13807.0-08.0	0.48	0.08	0.05	6.9	0.0	58.7	2.66	Sd,fg	vf
743	13808.0-09.0	0.10	0.05	0.06	6.9	0.0	63.8	2.67	Sd,fg	vf
744	13809.0-10.0	0.09	0.09	0.05	9.0	0.0	49.2	2.66	Sd,fg	vf
745	13810.0-11.0	0.08	0.06	0.08	8.7	0.0	53.0	2.64	Sd,fg	vf
746	13811.0-12.0	354	0.08	7.3	9.3	0.0	55.9	2.65	Sd,fg	vf
747	13812.0-13.0	0.05	*	0.09	8.3	0.0	73.0	2.66	Sd,fg	
748	13813.0-14.0	0.07	*	0.25	11.2	0.0	54.3	2.64	Sd,fg	
749	13814.0-15.0	0.12	*	0.07	10.8	0.0	63.1	2.65	Sd,fg	
750	13815.0-16.0	0.14	*	0.05	10.1	0.0	60.3	2.66	Sd,fg	
751	13816.0-17.0	0.09	*	0.06	9.5	0.0	46.6	2.66	Sd,fg	
752	13817.0-18.0	0.19	*	0.04	10.5	0.0	40.1	2.65	Sd,fg	
753	13818.0-19.0	0.60	*	0.16	9.8	0.0	59.3	2.65	Sd,fg	

* Plus permeability - sample not suitable for full diameter measurement
\+ Horizontal dehydration crack

TERRA TEK CORE SERVICES

360 Wakara Way , Salt Lake City, Utah 84108 (801) 584-2480

ANSCHUTZ CORPORATION
Well: ARE #6-20U

Date: 12 Mar 1982

TTCS File #: 91

Sample Number	Depth (feet)	Permeability Horz (md)	Horz-90° (md)	Vert (md)	Porosity (%)	Saturation Oil (%)	H2O (%)	Grain Density (gm/cc)	Lithology	
754	13819.0-20.0	0.12	*	0.06	9.3	0.0	50.9	2.65	Sd,fg	
755	13820.0-21.0	0.07	0.07	0.08	9.3	0.0	56.4	2.65	Sd,fg	
756	13821.0-22.0	0.08	0.06	0.12	10.0	0.0	44.5	2.64	Sd,fg	
757	13822.0-23.0	0.17	0.08	0.04	8.0	0.0	66.4	2.66	Sd,fg	vf
758	13823.0-24.0	0.07	0.05	0.05	9.1	0.0	63.2	2.66	Sd,fg	
759	13824.0-25.0	0.05	0.05	0.15	9.2	0.0	60.0	2.65	Sd,fg	
760	13825.0-26.0	0.06	0.03	0.40	9.1	0.0	62.0	2.65	Sd,fg	
761	13826.0-27.0	716	0.06	227	6.6	0.0	70.6	2.67	Sd,fg	vf
762	13827.0-28.0	12	0.08	4.4	7.7	0.0	67.2	2.65	Sd,fg	vf
763	13828.0-29.0	12	0.10	0.31	8.5	0.0	64.8	2.65	Sd,fg	
764	13829.0-30.0	0.43+	0.05	0.05	7.0	0.0	60.7	2.64	Sd,fg	
765	13830.0-31.0	21+	0.07	0.09	7.5	0.0	72.1	2.67	Sd,fg	
766	13831.0-32.0	0.04	0.04	0.03	7.9	0.0	72.3	2.66	Sd,fg	
767	13832.0-33.0	0.16	0.05	0.03	8.0	0.0	70.9	2.66	Sd,fg	
768	13833.0-34.0	0.06	0.06	0.03	6.8	0.0	69.5	2.66	Sd,fg	vf
769	13834.0-35.0	0.17	0.08	0.04	6.9	0.0	72.3	2.66	Sd,fg	
770	13835.0-36.0	0.52+	0.06	0.04	7.7	0.0	72.6	2.66	Sd,fg	
771	13836.0-37.0	0.08	0.06	0.03	7.8	0.0	72.1	2.66	Sd,fg	
772	13837.0-38.0	0.18	0.12	0.03	7.9	0.0	71.7	2.65	Sd,fg	vf
773	13838.0-39.0	569	0.10	1533	7.5	0.0	77.3	2.65	Sd,fg	vf
774	13839.0-40.0	109	0.03	0.09	4.5	0.0	79.8	2.66	Sd,fg	vf
775	13840.0-41.0	693	0.08	1757	6.9	0.0	70.2	2.65	Sd,fg	vf

* Plug permeability - sample not suitable for full diameter measurement
\+ Horizontal dehydration crack

TERRA TEK CORE SERVICES

360 Wakara Way , Salt Lake City, Utah 84108 (801) 584-2480

ANSCHUTZ CORPORATION
Well: ARE #6-20U

Date: 12 Mar 1982

TTCS File #: 91

Sample Number	Depth (feet)	Permeability Horz (md)	Permeability Horz-90° (md)	Permeability Vert (md)	Porosity (%)	Saturation Oil (%)	Saturation H2O (%)	Grain Density (gm/cc)	Lithology	
776	13841.0-42.0	1380	0.05	2662	6.7	0.0	71.2	2.65	Sd,fg	vf
777	13842.0-43.0	0.07	0.05	0.02	6.8	0.0	69.1	2.66	Sd,fg	vf
778	13843.0-44.0	0.06	0.05	0.03	6.9	0.0	66.8	2.65	Sd,fg	
779	13844.0-45.0	0.08	0.06	0.03	6.7	0.0	65.4	2.65	Sd,fg	
780	13845.0-46.0	0.11	0.04	0.03	6.8	0.0	67.0	2.66	Sd,fg	
781	13846.0-47.0	0.07	0.07	0.03	6.9	0.0	68.1	2.66	Sd,fg	
782	13847.0-48.0	404	0.43	2356	5.7	0.0	78.5	2.66	Sd,fg	vf
783	13848.0-49.0	275	0.07	361	5.7	0.0	75.5	2.66	Sd,fg	vf
784	13849.0-50.0	396	0.08	2713	5.9	0.0	68.4	2.66	Sd,fg	vf
785	13850.0-51.0	580	0.08	1269	6.4	0.0	69.1	2.65	Sd,fg	vf
786	13851.0-52.0	454	0.05	2675	6.3	0.0	76.8	2.65	Sd,fg	vf
787	13852.0-53.0	414	0.13	3593	6.0	0.0	79.0	2.65	Sd,fg	vf
788	13853.0-54.0	3.4	0.35	1461	5.8	0.0	80.8	2.66	Sd,fg	vf
789	13854.0-55.0	480	0.04	1670	6.2	0.0	76.6	2.66	Sd,fg	vf
790	13855.0-56.0	317	0.03	2030	5.7	0.0	74.8	2.65	Sd,fg	vf
791	13856.0-57.0	1085	0.07	745	5.8	0.0	73.8	2.66	Sd,fg	vf
792	13857.0-58.0	384	0.05	1300	5.0	0.0	82.5	2.67	Sd,fg	vf
793	13858.0-59.0	0.04	0.04	0.04	5.0	0.0	68.6	2.65	Sd,fg,lam	
794	13859.0-60.0	0.05	0.03	0.03	5.6	0.0	65.6	2.65	Sd,fg	
795	13860.0-61.0	0.04	0.03	0.02	5.4	0.0	64.0	2.65	Sd,fg	vf
796	13861.0-62.0	0.03	0.02	0.01	5.2	0.0	63.3	2.64	Sd,fg,lam	vf
797	13862.0-63.0	0.15+	0.03	0.02	5.5	0.0	66.5	2.65	Sd,fg,lam	

+ Horizontal dehydration crack

TERRA TEK CORE SERVICES

360 Wakara Way , Salt Lake City, Utah 84108 (801) 584-2480

ANSCHUTZ CORPORATION
Well: ARE #6-20U

Date: 12 Mar 1982

TTCS File #: 91

Sample Number	Depth (feet)	Permeability Horz (md)	Horz-90° (md)	Vert (md)	Porosity (%)	Saturation Oil (%)	H2O (%)	Grain Density (gm/cc)	Lithology	
798	13863.0-64.0	0.04	0.03	0.03	6.2	0.0	64.5	2.64	Sd,fg	
799	13864.0-65.0	0.03	0.03	0.03	6.1	0.0	61.9	2.65	Sd,fg,lam	
800	13865.0-66.0	0.03	0.03	0.04	6.3	0.0	65.1	2.65	Sd,fg,lam	
801	13866.0-67.0	89	0.05	0.25	6.1	0.0	63.9	2.64	Sd,fg,lam	vf
802	13867.0-68.0	0.02	0.02	0.03	5.9	0.0	62.7	2.64	Sd,fg,lam	
803	13868.0-69.0	0.02	0.02	0.03	5.7	0.0	66.6	2.65	Sd,fg,lam	
804	13869.0-70.0	0.05	0.03	289	6.6	0.0	64.2	2.65	Sd,fg,lam	vf
805	13870.0-71.0	0.05	0.03	480	6.6	0.0	60.6	2.64	Sd,fg,lam	vf
806	13871.0-72.0	0.07	0.02	1461	6.3	0.0	64.7	2.65	Sd,fg,lam	vf
807	13872.0-73.0	4.1	0.51	129	5.5	0.0	67.4	2.65	Sd,fg,lam	vf
808	13873.0-74.0	0.01	*	0.04	4.7	0.0	61.9	2.65	Sd,fg,lam	vf
809	13874.0-75.0	0.02	0.02	0.02	4.8	0.0	63.6	2.65	Sd,fg,lam	
810	13875.0-76.0	0.03	0.03	0.02	5.1	0.0	62.1	2.65	Sd,fg,lam	
811	13876.0-77.0	0.03	0.03	0.05	5.5	0.0	59.4	2.65	Sd,fg,lam	
812	13877.0-78.0	0.03	0.03	0.04	5.5	0.0	54.9	2.64	Sd,fg,lam	
813	13878.0-79.0	0.04	0.03	0.02	5.4	0.0	58.1	2.65	Sd,fg,lam	
814	13879.0-80.0	0.08	0.01	0.02	5.6	0.0	51.1	2.65	Sd,fg,lam	vf
815	13880.0-81.0	0.01	<0.01	0.01	3.8	0.0	74.9	2.66	Sd,fg,lam	vf
816	13881.0-82.0	0.03	0.02	0.03	3.2	0.0	74.6	2.65	Sd,fg,lam	
817	13882.0-83.0	0.02	0.02	0.01	2.6	0.0	72.9	2.64	Sd,fg	
818	13883.0-84.0	5.0	0.03	915	3.2	0.0	85.8	2.66	Sd,fg	vf
819	13884.0-85.0	10	0.02	376	4.6	0.0	56.9	2.64	Sd,fg	vf

* Plus permeability - sample not suitable for full diameter measurement

TERRA TEK CORE SERVICES

360 Wakara Way , Salt Lake City, Utah 84108 (801) 584-2480

ANSCHUTZ CORPORATION
Well: ARE #6-20U

Date: 12 Mar 1982

TTCS File #: 91

Sample Number	Depth (feet)	Permeability Horz (md)	Permeability Horz-90° (md)	Permeability Vert (md)	Porosity (%)	Saturation Oil (%)	Saturation H2O (%)	Grain Density (gm/cc)	Lithology	
820	13885.0-86.0	1203	0.05	245	5.6	0.0	58.0	2.64	Sd,fg	vf
821	13886.0-87.0	0.03	0.02	0.08	5.0	0.0	47.8	2.66	Sd,fg,lam	vf
822	13887.0-88.0	12	0.04	0.85	4.6	0.0	60.5	2.65	Sd,fg	vf
823	13888.0-89.0	<0.01	<0.01	0.02	3.0	0.0	80.4	2.67	Sd,fg,lam	vf
824	13889.0-90.0	6.2	0.02	0.07	2.7	0.0	86.0	2.66	Sd,fg,lam	vf
825	13890.0-91.0	3.4+	3.2	0.04	3.4	0.0	71.9	2.64	Sd,fg,lam	
826	13891.0-92.0	0.03	0.02	0.02	3.3	0.0	72.1	2.62	Sd,fg,lam	
827	13892.0-93.0	23	0.02	0.03	3.7	0.0	76.3	2.66	Sd,fg,lam	vf
828	13893.0-94.0	0.07	0.06	0.02	4.6	0.0	71.3	2.67	Sd,fg	
829	13894.0-95.0	0.03	0.01	<0.01	5.2	0.0	73.5	2.67	Sd,fg	vf
830	13895.0-96.0	0.03	0.02	0.01	7.3	0.0	58.3	2.65	Sd,fg,lam	
831	13896.0-97.0	0.03	0.02	<0.01	6.9	0.0	61.4	2.66	Sd,fg,lam	
832	13897.0-98.0	0.03	0.02	<0.01	5.9	0.0	66.9	2.66	Sd,fg,lam	
833	13898.0-99.0	0.02	0.02	<0.01	5.4	0.0	70.8	2.67	Sd,fg,lam	
834	13899.0-00.0	0.10	0.04	0.02	5.2	0.0	68.6	2.66	Sd,fg,lam	
835	13900.0-01.0	0.03	0.03	0.01	6.4	0.0	51.9	2.65	Sd,fg,lam	
836	13901.0-02.0	0.02	0.02	0.01	6.6	0.0	52.2	2.65	Sd,fg,lam	
837	13902.0-03.0	0.04	0.03	0.02	7.4	0.0	49.1	2.65	Sd,fg,lam	
838	13903.0-04.0	0.03	0.03	0.02	8.2	0.0	47.8	2.65	Sd,fg,lam	
839	13904.0-05.0	0.04	0.04	0.02	7.8	0.0	47.9	2.65	Sd,fg,lam	
840	13905.0-06.0	0.05	0.05	0.03	7.8	0.0	45.5	2.65	Sd,fg,lam	
841	13906.0-07.0	0.08	0.08	0.09	7.8	0.0	49.2	2.65	Sd,fg,lam	

+ Horizontal dehydration crack

TERRA TEK CORE SERVICES

360 Wakara Way , Salt Lake City, Utah 84108 (801) 584-2480

ANSCHUTZ CORPORATION Date: 12 Mar 1982 TTCS File #: 91
Well: ARE #6-20U

Sample Number	Depth (feet)	Permeability Horz (md)	Horz-90° (md)	Vert (md)	Porosity (%)	Saturation Oil (%)	H2O (%)	Grain Density (gm/cc)	Lithology	
842	13907.0-08.0	0.13	0.13	0.04	10.4	0.0	46.9	2.65	Sd,fg,lam	
843	13908.0-09.0	0.12	0.12	0.02	9.3	0.0	50.6	2.65	Sd,fg,lam	
844	13909.0-10.0	0.07	0.07	0.02	9.2	0.0	50.3	2.65	Sd,fg,lam	
845	13910.0-11.0	0.03	0.02	0.03	5.9	0.0	67.3	2.66	Sd,fg	vf
846	13911.0-12.0	0.02	0.02	<0.01	6.1	0.0	66.9	2.66	Sd,fg,lam	vf
847	13912.0-13.0	0.01	0.01	<0.01	4.0	0.0	93.0	2.68	Sd,fg,lam	
848	13913.0-14.0	0.01	0.01	<0.01	4.6	0.0	79.4	2.68	Sd,fg,lam	vf
849	13914.0-15.0	0.01	0.01	<0.01	4.7	0.0	76.7	2.68	Sd,fg	vf
850	13915.0-16.0	0.01	0.01	<0.01	4.9	0.0	75.6	2.67	Sd,fg	
851	13916.0-17.0	0.02	0.02	<0.01	5.2	0.0	73.0	2.67	Sd,fg	
852	13917.0-18.0	0.03	0.03	0.01	4.5	0.0	70.0	2.67	Sd,fg	
853	13918.0-19.0	0.04	0.03	0.02	5.6	0.0	61.6	2.65	Sd,fg	vf
854	13919.0-20.0	0.03	0.03	0.02	5.6	0.0	60.6	2.65	Sd,fg	
855	13920.0-21.0	0.03	0.02	0.02	5.6	0.0	55.5	2.65	Sd,fg,lam	
856	13921.0-22.0	0.03	0.03	0.02	6.1	0.0	57.2	2.65	Sd,fg,lam	
857	13922.0-23.0	0.04	0.03	0.02	5.7	0.0	68.0	2.66	Sd,fg,lam	vf
858	13923.0-24.0	0.02	0.02	0.01	6.8	0.0	60.4	2.65	Sd,fg,lam	
859	13924.0-25.0	0.05	0.05	0.01	7.3	0.0	58.0	2.64	Sd,fg,lam	
860	13925.0-26.0	0.05	0.04	0.02	6.0	0.0	62.3	2.66	Sd,fg	
861	13926.0-27.0	0.05	0.05	0.02	4.9	0.0	63.6	2.66	Sd,fg	
862	13927.0-28.0	0.15	0.13	0.05	7.5	0.0	38.1	2.64	Sd,fg	
863	13928.0-29.0	0.10	0.09	0.06	9.1	0.0	48.4	2.65	Sd,fg	

TERRA TEK CORE SERVICES

360 Wakara Way , Salt Lake City, Utah 84108 (801) 584-2480

ANSCHUTZ CORPORATION Date: 12 Mar 1982 TTCS File #: 91

Well: ARE #6-20U

Sample Number	Depth (feet)	Permeability Horz (md)	Horz-90° (md)	Vert (md)	Porosity (%)	Saturation Oil (%)	H2O (%)	Grain Density (gm/cc)	Lithology
864	13929.0-30.0	0.08	0.07	0.07	9.8	0.0	52.8	2.65	Sd,fg
865	13930.0-31.0	0.05	0.04	0.12	9.9	0.0	50.4	2.65	Sd,fg
866	13931.0-32.0	0.16	0.06	0.10	11.4	0.0	46.0	2.64	Sd,fg
	13932.0 - 13939.0								NOT SUITABLE FOR ANALYSIS
867	13939.0-40.0	0.05	0.04	0.10	9.2	0.0	68.6	2.65	Sd,fg vf
868	13940.0-41.0	0.07	0.06	0.03	10.3	0.0	56.9	2.66	Sd,fg
869	13941.0-42.0	0.07	0.06	0.03	10.5	0.0	60.3	2.65	Sd,fg
870	13942.0-43.0	0.05	0.05	0.08	10.5	0.0	58.8	2.66	Sd,fg
871	13943.0-44.0	0.05	0.05	0.05	9.8	0.0	60.9	2.65	Sd,fg
872	13944.0-45.0	0.05	0.05	0.03	8.6	0.0	61.1	2.65	Sd,fg
873	13945.0-46.0	0.05	0.04	0.04	10.2	0.0	58.7	2.65	Sd,fg
874	13946.0-47.0	0.05	0.04	0.04	9.8	0.0	59.0	2.65	Sd,fg
875	13947.0-48.0	0.04	0.04	0.04	9.5	0.0	58.9	2.65	Sd,fg
876	13948.0-49.0	0.05	0.04	0.05	9.3	0.0	61.8	2.64	Sd,fg vf
877	13949.0-50.0	0.06	0.05	0.05	9.9	0.0	56.5	2.65	Sd,fg vf
878	13950.0-51.0	0.06	0.05	0.03	8.9	0.0	64.5	2.65	Sd,fg
879	13951.0-52.0	0.06	0.06	0.03	7.7	0.0	64.4	2.66	Sd,fg
880	13952.0-53.0	0.05	0.04	0.03	7.7	0.0	55.5	2.65	Sd,fg
881	13953.0-54.0	0.02	0.02	0.02	6.7	0.0	55.8	2.64	Sd,fg
882	13954.0-55.0	0.02	0.02	0.02	6.1	0.0	64.8	2.65	Sd,fg
883	13955.0-56.0	0.02	0.02	0.02	6.5	0.0	62.2	2.65	Sd,fg
884	13956.0-57.0	0.02	0.02	<0.01	5.7	0.0	57.4	2.64	Sd,fg

TERRA TEK CORE SERVICES

360 Wakara Way , Salt Lake City, Utah 84108 (801) 584-2480

ANSCHUTZ CORPORATION
Well: ARE #6-20U

Date: 12 Mar 1982

TTCS File #: 91

Sample Number	Depth (feet)	Permeability Horz (md)	Horz-90° (md)	Vert (md)	Porosity (%)	Saturation Oil (%)	H2O (%)	Grain Density (gm/cc)	Lithology	
885	13957.0-58.0	0.06	0.02	<0.01	5.8	0.0	66.4	2.66	Sd,fg	
886	13958.0-59.0	0.04	0.02	0.02	2.1	0.0	94.0	2.66	Sd,fg	
887	13959.0-60.0	0.02	0.02	0.01	5.4	0.0	75.0	2.65	Sd,fg	
888	13960.0-61.0	0.03	0.02	0.01	5.3	0.0	75.1	2.65	Sd,fg	
889	13961.0-62.0	0.02	0.02	0.02	7.1	0.0	64.0	2.65	Sd,fg	
890	13962.0-63.0	0.03	0.03	0.02	6.2	0.0	69.7	2.65	Sd,fg	
891	13963.0-64.0	0.01	0.01	0.03	5.5	0.0	69.7	2.65	Sd,fg	vf
892	13964.0-65.0	89	0.01	0.10	4.8	0.0	73.9	2.65	Sd,fg	vf
893	13965.0-66.0	205	0.03	920	4.8	0.0	66.4	2.64	Sd,fg	
894	13966.0-67.0	0.03	0.01	0.02	4.8	0.0	55.7	2.64	Sd,fg	vf
895	13967.0-68.0	1.6	0.01	0.02	4.8	0.0	59.8	2.65	Sd,fg	vf
896	13968.0-69.0	0.02	*	0.03	4.6	0.0	55.7	2.64	Sd,fg	vf
897	13969.0-70.0	0.01	*	0.02	4.8	0.0	58.7	2.64	Sd,fg	vf
898	13970.0-71.0	0.01	*	<0.01	4.3	0.0	72.8	2.64	Sd,fg	vf
899	13971.0-72.0	<0.01	*	<0.01	5.1	0.0	68.1	2.65	Sd,fg	vf
900	13972.0-73.0	100	0.02	1494	5.4	0.0	77.4	2.65	Sd,fg	
901	13973.0-74.0	0.02	0.01	0.04	6.3	0.0	62.1	2.65	Sd,fg	
902	13974.0-75.0	0.01	*	0.01	7.0	0.0	59.6	2.66	Sd,fg	
903	13975.0-76.0	0.02	0.01	0.02	7.0	0.0	60.8	2.66	Sd,fg	
904	13976.0-77.0	0.01	<0.01	<0.01	7.2	0.0	60.1	2.65	Sd,fg	
905	13977.0-78.0	0.01	0.01	0.01	7.4	0.0	60.2	2.65	Sd,fg	
906	13978.0-79.0	0.02	0.02	<0.01	7.7	0.0	59.4	2.65	Sd,fg	

* Plug permeability - sample not suitable for full diameter measurement

TERRA TEK CORE SERVICES

360 Wakara Way , Salt Lake City, Utah 84108 (801) 584-2480

ANSCHUTZ CORPORATION Date: 12 Mar 1982 TTCS File #: 91
Well: ARE #6-20U

Sample Number	Depth (feet)	Permeability Horz (md)	Horz-90° (md)	Vert (md)	Porosity (%)	Saturation Oil (%)	H2O (%)	Grain Density (gm/cc)	Lithology	
907	13979.0-80.0	0.05	*	0.04	9.2	0.0	59.9	2.66	Sd,fg	
908	13980.0-81.0	0.03	0.03	0.02	8.3	0.0	63.1	2.65	Sd,fg	
909	13981.0-82.0	0.03	0.03	0.03	8.3	0.0	61.0	2.65	Sd,fg	
910	13982.0-83.0	0.04	0.02	0.03	8.2	0.0	61.9	2.65	Sd,fg	
911	13983.0-84.0	0.60	0.06	9.0	7.9	0.0	56.1	2.65	Sd,fg	vf
912	13984.0-85.0	542	0.03	5.1	8.0	0.0	62.3	2.65	Sd,fg	vf
913	13985.0-86.0	0.10	0.06	0.13	9.2	0.0	57.5	2.65	Sd,fg	vf
914	13986.0-87.0	684	0.26	46	9.7	0.0	55.5	2.65	Sd,fg	vf
915	13987.0-88.0	0.05	0.02	0.03	7.4	0.0	62.8	2.66	Sd,fg	
916	13988.0-89.0	0.05	*	0.03	9.0	0.0	53.9	2.67	Sd,fg	
	13989.0 - 13990.0								NOT RECOVERED	
917	13990.0-91.0	0.02	0.02	0.03	8.6	0.0	58.9	2.65	Sd,fg	
918	13991.0-92.0	0.02	0.02	0.03	8.6	0.0	62.5	2.64	Sd,fg	
919	13992.0-93.0	0.06	0.04	0.03	9.3	0.0	59.1	2.65	Sd,fg	
920	13993.0-94.0	0.04	0.03	0.03	8.5	0.0	59.5	2.64	Sd,fg	
921	13994.0-95.0	0.02	0.02	0.04	8.2	0.0	57.9	2.65	Sd,fg	
922	13995.0-96.0	0.02	0.02	0.04	7.8	0.0	58.5	2.65	Sd,fg	
923	13996.0-97.0	0.02	0.02	0.04	7.8	0.0	60.1	2.65	Sd,fg	
924	13997.0-98.0	0.03	0.02	0.03	7.6	0.0	62.7	2.65	Sd,fg	
925	13998.0-99.0	0.02	0.02	0.03	7.0	0.0	64.9	2.65	Sd,fg	
926	13999.0-00.0	0.02	0.02	0.03	7.2	0.0	60.5	2.65	Sd,fg	
927	14000.0-01.0	0.01	0.01	0.03	6.9	0.0	61.2	2.64	Sd,fg	

* Plug permeability - sample not suitable for full diameter measurement

TERRA TEK CORE SERVICES

360 Wakara Way , Salt Lake City, Utah 84108 (801) 584-2480

ANSCHUTZ CORPORATION Date: 12 Mar 1982 TTCS File #: 91
Well: ARE #6-20U

Sample Number	Depth (feet)	Permeability Horz (md)	Horz-90° (md)	Vert (md)	Porosity (%)	Saturation Oil (%)	H2O (%)	Grain Density (gm/cc)	Lithology	
928	14001.0-02.0	0.01	0.01	0.04	6.5	0.0	62.2	2.65	Sd,fg	
929	14002.0-03.0	0.02	0.02	0.04	9.5	0.0	30.8	2.65	Sd,fg	
930	14003.0-04.0	0.02	0.02	0.02	6.5	0.0	66.8	2.64	Sd,fg	
931	14004.0-05.0	0.02	0.01	0.03	6.5	0.0	62.6	2.65	Sd,fg	
932	14005.0-06.0	0.02	0.02	0.03	5.8	0.0	66.2	2.66	Sd,fg	
933	14006.0-07.0	0.01	0.01	0.03	5.2	0.0	66.7	2.66	Sd,fg	
934	14007.0-08.0	<0.01	<0.01	0.03	6.3	0.0	55.1	2.66	Sd,fg	
935	14008.0-09.0	0.01	0.01	0.02	5.2	0.0	70.4	2.66	Sd,fg	
936	14009.0-10.0	<0.01	<0.01	0.02	4.6	0.0	75.5	2.66	Sd,fg	
937	14010.0-11.0	0.03	0.02	0.02	5.6	0.0	61.5	2.67	Sd,fg	
938	14011.0-12.0	0.06	0.04	0.05	6.9	0.0	54.6	2.67	Sd,fg	
939	14012.0-13.0	0.01	0.01	0.02	6.4	0.0	66.0	2.67	Sd,fg	
940	14013.0-14.0	0.02	0.02	0.03	6.2	0.0	64.9	2.66	Sd,fg	
941	14014.0-15.0	0.03	0.03	0.02	4.1	0.0	70.2	2.67	Sd,fg	
942	14015.0-16.0	0.01	0.01	0.02	4.7	0.0	63.6	2.66	Sd,fg	
943	14016.0-17.0	0.12	0.07	0.04	2.0	0.0	88.8	2.65	Sd,fg	vf
944	14017.0-18.0	392	0.03	965	2.0	0.0	99.3	2.65	Sd,fg	vf
945	14018.0-19.0	0.04	*	0.03	3.1	0.0	70.5	2.65	Sd,fg	
946	14019.0-20.0	0.02	0.02	0.02	2.2	0.0	79.3	2.67	Sd,fg	
947	14020.0-21.0	0.01	0.01	0.02	3.2	0.0	85.6	2.68	Sd,fg	
948	14021.0-22.0	0.03	0.03	0.03	8.5	0.0	43.9	2.65	Sd,fg	
949	14022.0-23.0	5.0+	0.03	0.04	8.7	0.0	46.9	2.66	Sd,fg	

* Plus permeability - sample not suitable for full diameter measurement
\+ Horizontal dehydration crack

TERRA TEK CORE SERVICES

360 Wakara Way , Salt Lake City, Utah 84108 (801) 584-2480

ANSCHUTZ CORPORATION
Well: ARE #6-20U

Date: 12 Mar 1982

TTCS File #: 91

Sample Number	Depth (feet)	Permeability Horz (md)	Permeability Horz-90° (md)	Permeability Vert (md)	Porosity (%)	Saturation Oil (%)	Saturation H2O (%)	Grain Density (gm/cc)	Lithology	
950	14023.0-24.0	0.02	0.02	0.71	10.5	0.0	46.3	2.66	Sd,fg	vf
951	14024.0-25.0	3.4	3.3	0.03	10.4	0.0	41.3	2.65	Sd,fg	vf
952	14025.0-26.0	0.02	0.02	0.03	6.8	0.0	62.1	2.67	Sd,fg	
953	14026.0-27.0	0.01	<0.01	0.02	2.5	0.0	80.4	2.66	Sd,fg	
954	14027.0-28.0	0.02	0.02	0.06	4.4	0.0	81.1	2.66	Sd,fg	vf
955	14028.0-29.0	0.02	0.02	0.25	9.8	0.0	55.1	2.66	Sd,fg	vf
956	14029.0-30.0	0.02	0.02	0.11	10.2	0.0	54.9	2.66	Sd,fg	vf
957	14030.0-31.0	0.01	0.01	0.08	7.9	0.0	57.6	2.66	Sd,fg	vf
958	14031.0-32.0	0.01	<0.01	0.20	8.0	0.0	53.4	2.67	Sd,fg	vf
959	14032.0-33.0	0.02	0.01	0.07	6.8	0.0	53.9	2.66	Sd,fg	vf
960	14033.0-34.0	0.02	0.02	0.05	5.3	0.0	59.1	2.67	Sd,fg	vf
961	14034.0-35.0	0.02	0.01	0.03	4.6	0.0	64.2	2.67	Sd,fg	
962	14035.0-36.0	0.02	0.01	0.02	4.5	0.0	63.6	2.66	Sd,fg	
963	14036.0-37.0	0.02	0.02	0.03	6.4	0.0	48.3	2.65	Sd,fg	
964	14037.0-38.0	0.02	0.01	0.03	4.3	0.0	59.0	2.65	Sd,fg	
965	14038.0-39.0	0.03	0.02	0.04	2.4	0.0	88.7	2.69	Sd,fg	
966	14039.0-40.0	2.2	0.03	225	1.9	0.0	98.1	2.68	Sd,fg	vf
967	14040.0-41.0	0.07	0.05	17	2.5	0.0	86.8	2.67	Sd,fg	vf
968	14041.0-42.0	16	14	82	1.5	0.0	89.0	2.68	Sd,fg	vf
969	14042.0-43.0	0.30	0.17	134	1.4	0.0	86.1	2.68	Sd,fg	vf
970	14043.0-44.0	0.02	*	0.02	1.2	0.0	83.4	2.69	Sd,fg	vf
971	14044.0-45.0	1.2	0.02	132	1.0	0.0	87.6	2.71	Sd,fg	vf

* Plug permeability - sample not suitable for full diameter measurement

TERRA TEK CORE SERVICES

360 Wakara Way , Salt Lake City, Utah 84108 (801) 584-2480

ANSCHUTZ CORPORATION Date: 12 Mar 1982 TTCS File #: 91
Well: ARE #6-20U

Sample Number	Depth (feet)	Permeability Horz (md)	Horz-90° (md)	Vert (md)	Porosity (%)	Saturation Oil (%)	H2O (%)	Grain Density (gm/cc)	Lithology	
972	14045.0-46.0	429	0.01	289	0.3	0.0	94.3	2.75	Sd,fg	vf
973	14046.0-47.0	1354	289	152	0.8	0.0	96.2	2.76	Sd,fg	vf
974	14047.0-48.0	<0.01	*	<0.01	0.7	0.0	81.9	2.73	Sd,fg	

* Plug permeability - sample not suitable for full diameter measurement

TERRA TEK CORE SERVICES

360 Wakara Way, Salt Lake City, Utah 84108 (801) 584-2480

ANSCHUTZ CORPORATION

Well:	ARE #6-20U	State:	Utah	Date:	15 Mar 1982
Field:	Anschutz Ranch East	County:	Summit	TTCS File #:	91
Drilling Fluid:	Water Base	Location:	Sec. 20 T4N R8E	Elevation:	N/A

DATA SUMMARY
DEAN-STARK FULL DIAMETER ANALYSIS

Zone Number	Depth Interval (feet)	Number of samples	Permeability Horz (md)	Permeability Horz-90° (md)	Permeability Vert (md)	Porosity (%)	Saturation Oil (%)	Saturation H2O (%)	Grain Density (gm/cc)
NUGGET FORMATION									
1	12996.0-003.0	7	378	0.06	2246	4.8	22.0	30.2	2.64
			[707]	[0.07]	[4429]	[1.6]	[10.9]	[12.3]	[0.0]
2	13005.0-060.0	55	3.3	2.1	0.57	9.3	9.8	24.5	2.64
			[4.6]	[2.4]	[0.79]	[1.5]	[3.7]	[2.7]	[0.0]
3	13060.0-076.0	16	151	0.84	295	5.4	13.9	40.6	2.65
			[250]	[2.3]	[579]	[1.3]	[10.2]	[14.8]	[0.0]
4	13076.0-118.0	42	13	2.2	24	9.9	6.4	19.5	2.64
			[48]	[2.3]	[140]	[1.9]	[2.3]	[6.1]	[0.0]
5	13118.0-126.0	8	57	0.24	466	4.6	20.9	38.2	2.64
			[89]	[0.49]	[864]	[1.0]	[8.8]	[12.8]	[0.0]
6	13126.0-167.0	41	26	0.66	86	8.4	9.2	25.2	2.64
			[116]	[0.94]	[314]	[2.0]	[5.5]	[5.8]	[0.0]
7	13167.0-186.0	19	123	2.2	40	9.7	5.4	11.3	2.64
			[466]	[4.4]	[105]	[1.7]	[3.7]	[4.5]	[0.0]

[ ] Sample standard deviation

TERRA TEK CORE SERVICES

360 Wakara Way , Salt Lake City, Utah 84108 (801) 584-2480

ANSCHUTZ CORPORATION
Well: ARE #6-20U

Date: 15 Mar 1982

TTCS File #: 91

DATA SUMMARY

Zone Number	Depth Interval (feet)	Number of samples	Permeability Horz (md)	Permeability Horz-90° (md)	Permeability Vert (md)	Porosity (%)	Saturation Oil (%)	Saturation H2O (%)	Grain Density (gm/cc)
8	13186.0-196.0	10	92 [164]	0.16 [0.13]	514 [921]	6.1 [1.0]	5.6 [5.6]	13.4 [1.8]	2.64 [0.0]
9	13196.0-223.0	27	75 [247]	0.63 [0.98]	95 [405]	6.6 [1.4]	4.8 [3.4]	8.5 [3.0]	2.64 [0.0]
10	13223.0-250.0	24	85 [380]	11 [33]	38 [152]	10.8 [1.5]	7.6 [3.6]	10.1 [5.1]	2.64 [0.0]
11	13250.0-317.0	67	26 [57]	13 [19]	5.4 [8.3]	12.6 [1.7]	5.3 [1.8]	11.6 [3.5]	2.64 [0.0]
12	13317.0-343.0	26	12 [17]	4.7 [4.9]	0.64 [1.2]	9.3 [2.3]	5.9 [1.6]	9.7 [3.7]	2.64 [0.0]
13	13343.0-356.0	13	1.1 [1.4]	0.59 [0.71]	0.99 [2.1]	7.2 [1.4]	4.4 [1.7]	11.3 [4.6]	2.64 [0.0]
14	13356.0-390.0	32	3.8 [10.0]	1.7 [1.7]	0.92 [1.6]	11.5 [1.4]	5.3 [1.7]	15.2 [4.3]	2.64 [0.0]
15	13408.0-412.0	4	0.21 [0.08]	0.17 [0.05]	0.09 [0.06]	7.2 [0.4]	3.6 [1.6]	28.2 [5.6]	2.64 [0.0]
16	13412.0-473.0	22	4.8 [4.2]	4.3 [3.9]	2.2 [7.2]	11.2 [1.3]	7.7 [2.3]	19.0 [4.6]	2.64 [0.0]

[ ] Sample standard deviation

TERRA TEK CORE SERVICES

360 Wakara Way , Salt Lake City, Utah 84108 (801) 584-2480

ANSCHUTZ CORPORATION
Well: ARE #6-20U

Date: 15 Mar 1982

TTCS File #: 91

DATA SUMMARY

Zone Number	Depth Interval (feet)	Number of samples	Permeability Horz (md)	Permeability Horz-90° (md)	Permeability Vert (md)	Porosity (%)	Saturation Oil (%)	Saturation H2O (%)	Grain Density (gm/cc)
17	13473.0-485.0	12	0.94 [0.65]	0.62 [0.34]	0.20 [0.23]	9.0 [0.7]	8.7 [3.2]	33.8 [3.1]	2.65 [0.0]
18	13485.0-490.0	5	2.0 [1.3]	1.5 [0.84]	0.60 [0.46]	11.5 [0.7]	5.9 [3.2]	26.1 [4.2]	2.64 [0.0]
19	13490.0-496.0	6	1934 [2845]	0.19 [0.13]	267 [418]	8.0 [0.4]	8.5 [4.0]	52.6 [9.7]	2.64 [0.0]
20	13496.0-499.0	3	4.0 [2.5]	3.5 [2.5]	1.6 [1.4]	12.9 [0.1]	7.4 [0.9]	23.5 [1.7]	2.64 [0.0]
21	13499.0-503.0	4	590 [442]	0.32 [0.25]	322 [381]	8.6 [1.8]	10.0 [6.8]	43.6 [15.7]	2.65 [0.0]
22	13503.0-531.0	26	3.1 [2.6]	2.6 [2.0]	37 [184]	14.3 [1.9]	8.3 [2.2]	24.4 [3.8]	2.64 [0.0]
23	13531.0-541.0	10	1034 [1115]	1.7 [3.4]	879 [1081]	7.4 [0.8]	6.2 [3.2]	44.2 [4.5]	2.65 [0.0]
24	13541.0-546.0	5	258 [574]	0.14 [0.06]	203 [453]	10.2 [1.1]	4.2 [0.9]	25.5 [4.2]	2.64 [0.0]
25	13546.0-581.0	35	3.8 [3.3]	2.9 [2.0]	1.2 [0.64]	14.0 [1.0]	6.4 [1.2]	16.8 [2.2]	2.64 [0.0]

[ ] Sample standard deviation

TERRA TEK CORE SERVICES

360 Wakara Way , Salt Lake City, Utah 84108 (801) 584-2480

ANSCHUTZ CORPORATION Date: 15 Mar 1982 TTCS File #: 91
Well: ARE #6-20U

DATA SUMMARY

Zone Number	Depth Interval (feet)	Number of samples	Permeability Horz (md)	Permeability Horz-90° (md)	Permeability Vert (md)	Porosity (%)	Saturation Oil (%)	Saturation H2O (%)	Grain Density (gm/cc)
26	13581.0-614.0	33	13	1.0	26	10.3	7.1	17.3	2.64
			[56]	[2.1]	[148]	[1.4]	[1.3]	[2.4]	[0.0]
27	13614.0-617.0	3	1.6	0.24	0.13	7.2	8.2	52.8	2.65
			[2.1]	[0.14]	[0.11]	[1.4]	[0.9]	[11.0]	[0.0]
28	13617.0-651.0	34	4.3	2.7	1.1	12.4	7.6	21.7	2.64
			[6.0]	[3.8]	[1.7]	[2.0]	[2.4]	[9.6]	[0.0]
29	13651.0-790.0	135	150	0.14	252	4.9	0.0	76.8	2.65
			[475]	[0.85]	[925]	[1.4]	[0.0]	[12.2]	[0.0]
30	13790.0-826.0	36	14	0.13	22	8.7	0.0	55.6	2.65
			[60]	[0.25]	[131]	[1.1]	[0.0]	[6.6]	[0.0]
31	13826.0-928.0	102	95	0.09	297	6.0	0.0	66.2	2.65
			[254]	[0.32]	[725]	[1.4]	[0.0]	[9.9]	[0.0]
32	13928.0-951.0	16	0.06	0.05	0.06	9.8	0.0	57.7	2.65
			[0.03]	[0.01]	[0.03]	[0.7]	[0.0]	[5.9]	[0.0]
33	13951.0-016.0	64	25	0.02	39	6.7	0.0	62.8	2.65
			[111]	[0.03]	[218]	[1.6]	[0.0]	[7.9]	[0.0]
34	14016.0-021.0	5	78	0.03	193	2.5	0.0	84.7	2.66
			[175]	[0.03]	[431]	[0.6]	[0.0]	[10.7]	[0.0]

[ ] Sample standard deviation

TERRA TEK CORE SERVICES

360 Wakara Way , Salt Lake City, Utah 84108 (801) 584-2480

ANSCHUTZ CORPORATION
Well: ARE #6-20U

Date: 15 Mar 1982

TTCS File #: 91

DATA SUMMARY

Zone Number	Depth Interval (feet)	Number of samples	Permeability Horz (md)	Permeability Horz-90° (md)	Permeability Vert (md)	Porosity (%)	Saturation Oil (%)	Saturation H2O (%)	Grain Density (gm/cc)
35	14021.0-038.0	17	0.51 [1.4]	0.21 [0.80]	0.11 [0.17]	7.0 [2.5]	0.0 [0.0]	57.1 [11.2]	2.66 [0.0]
36	14038.0-048.0	10	180 [434]	38 [102]	103 [102]	1.4 [0.7]	0.0 [0.0]	89.2 [5.4]	2.70 [0.0]

[ ] Sample standard deviation

TERRA TEK CORE SERVICES

Anschutz Corporation
ARE #6-20U
Anschutz Ranch East
Summit County, Utah

CORE ORIENTATION DATA

Core	Depth	Bedding Strike	Bedding Dip	Fractures Strike	Fractures Dip
1		NO DATA			
2		NO DATA			
3		NO DATA			
4		CORE NOT SUITABLE FOR ORIENTATION			
5	13200	N 35 W	27 S	N 59 W	82 N
	13215	N 42 W	18 N	N 34 W	88 N
	13230	N 79 W	18 S	N 60 W	65 S
	13245	NOT RECOVERED			
6		NO DATA			
7	13310	N 05 W	34 S		
	13340	N 21 W	39 S	N 62 W	76 S
8	13375	N 10 E	14 S		
9		NO DATA			
10		NO DATA			
11	13556	N 05 W	33 S		
	13586	N 70 W	23 S		
12	13617	N 42 E N 40 W	15 S 25 S	N 71 W	07 S
	13647	N 38 W	40 S		

Core	Depth	Bedding Strike	Bedding Dip	Fractures Strike	Fractures Dip
13		NO DATA			
14		NO DATA			
15	13715	NO VISIBLE BEDDING		N 48 W	89 S
	13730	NO VISIBLE BEDDING		N 23 W	89 N
	13745	NO VISIBLE BEDDING		N 44 W	68 N
	13760	NOT RECOVERED			
16	13772	N 84 E	20 N	N 05 E	82 S
	13792	N 14 W	40 S	N 42 E	49 S
	13812	N 30 W	27 S	N 15 W	90
17	13826	N 06 E	27 N	N 12 W N 27 W	89 S 70 N
	13847	N 48 E	01 S	N 00 W	89 E
	13870	N 32 W	39 S	N 10 W	84 N
18	13900	N 70 E	21 N	N 61 E	48 S
	13930	N 20 E	01 S	N 01 W N 32 E	83 S 87 N
19	13960	NOT RECOVERED			
20	13990	CORE NOT SUITABLE FOR ORIENTATION			
21	14016	N 52 E	26 N		
	14048	CORE NOT SUITABLE FOR ORIENTATION			

TERRA TEK CORE SERVICES INC.

360 Wakara Way, SLC Utah 84108 (801) 584-2480

ANSCHUTZ CORPORATION

ARE #6-20U

10 Feb 1982

TEKLOG

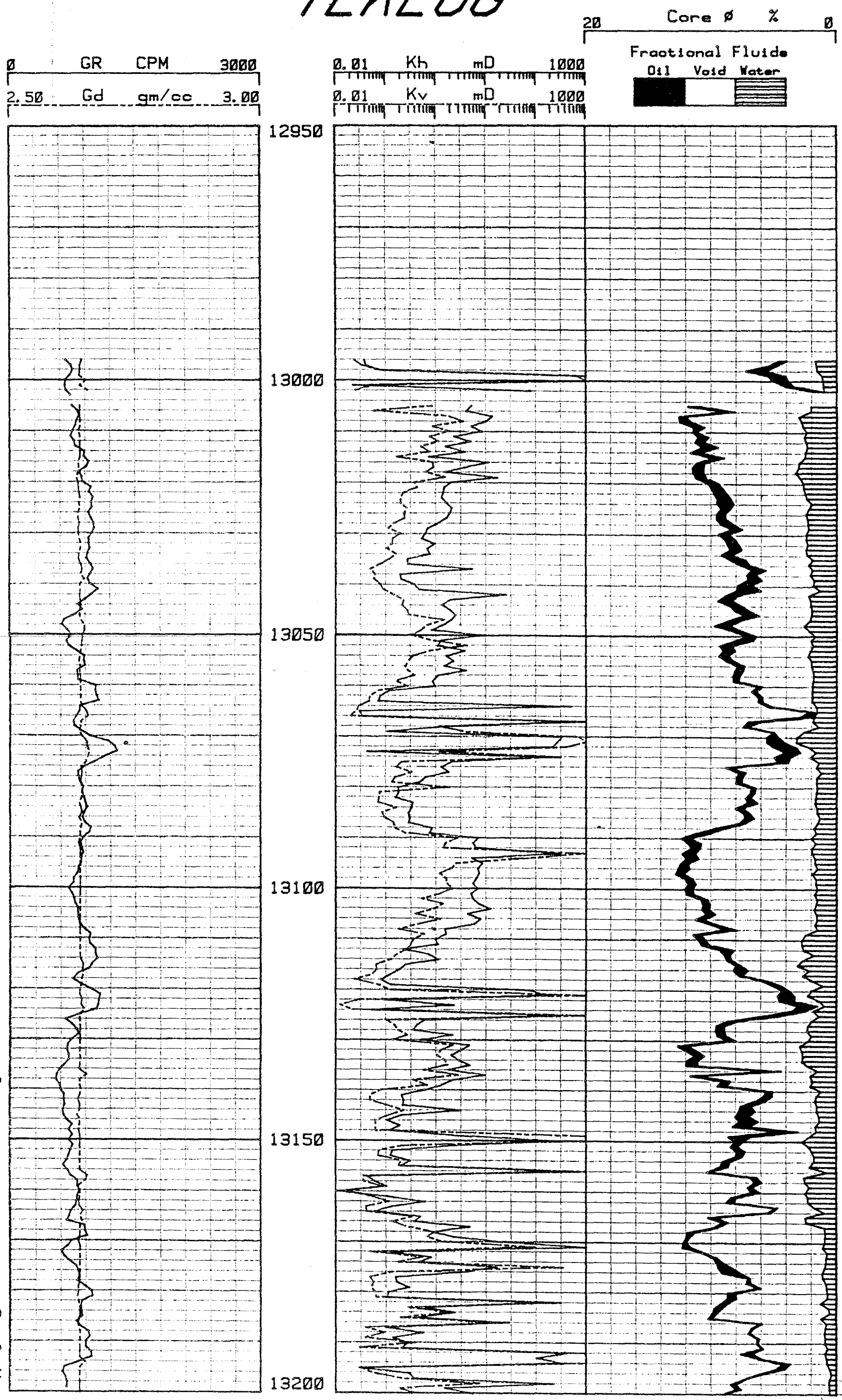

Copyright © Terra Tek Core Services All Rights Reserved

TERRA TEK CORE SERVICES INC.

360 Wakara Way, SLC Utah 84108 (801) 584-2480

ANSCHUTZ CORPORATION

ARE #6-20U

10 Feb 1982

TEKLOG

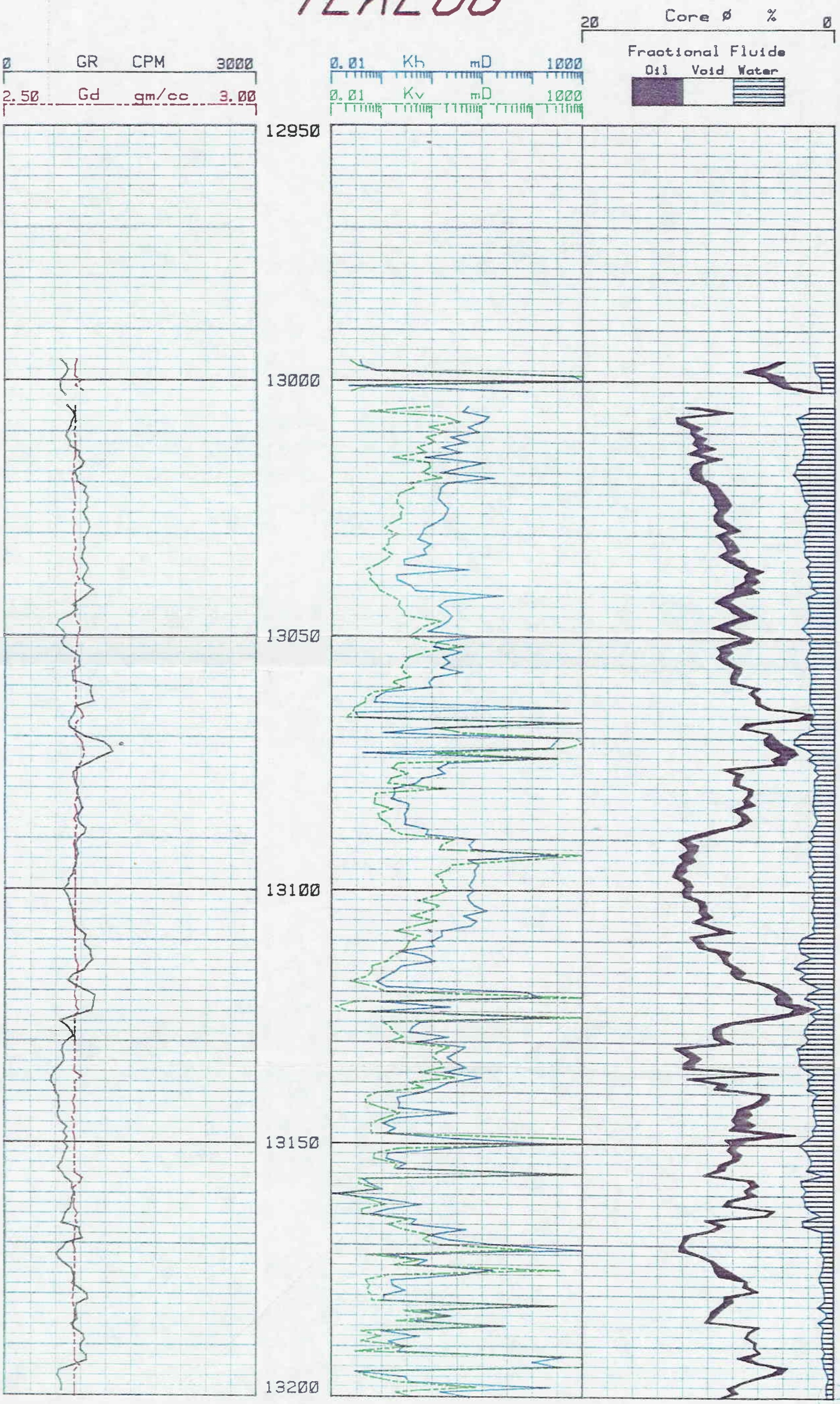

Copyright © Terra Tek Core Services All Rights Reserved

TERRA TEK CORE SERVICES INC.

360 Wakara Way, SLC Utah 84108 (801) 584-2480

ANSCHUTZ CORPORATION
ARE #6-20U

10 Feb 1982

TEKLOG

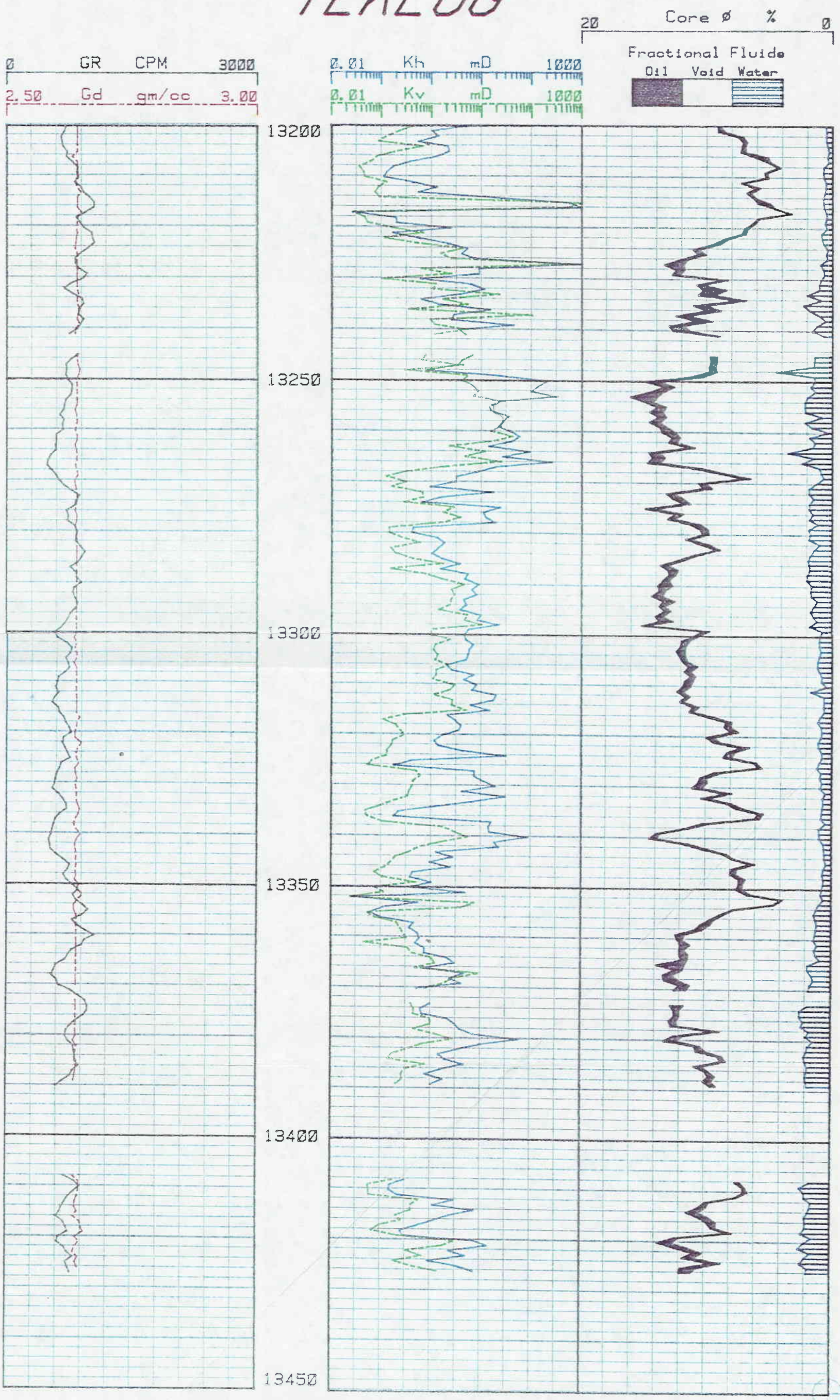

Copyright © Terra Tek Core Services All Rights Reserved

TERRA TEK CORE SERVICES INC.
360 Wakara Way. SLC Utah 84108 (801) 584-2480

ANSCHUTZ CORPORATION
ARE #6-20U

10 Feb 1982

TEKLOG

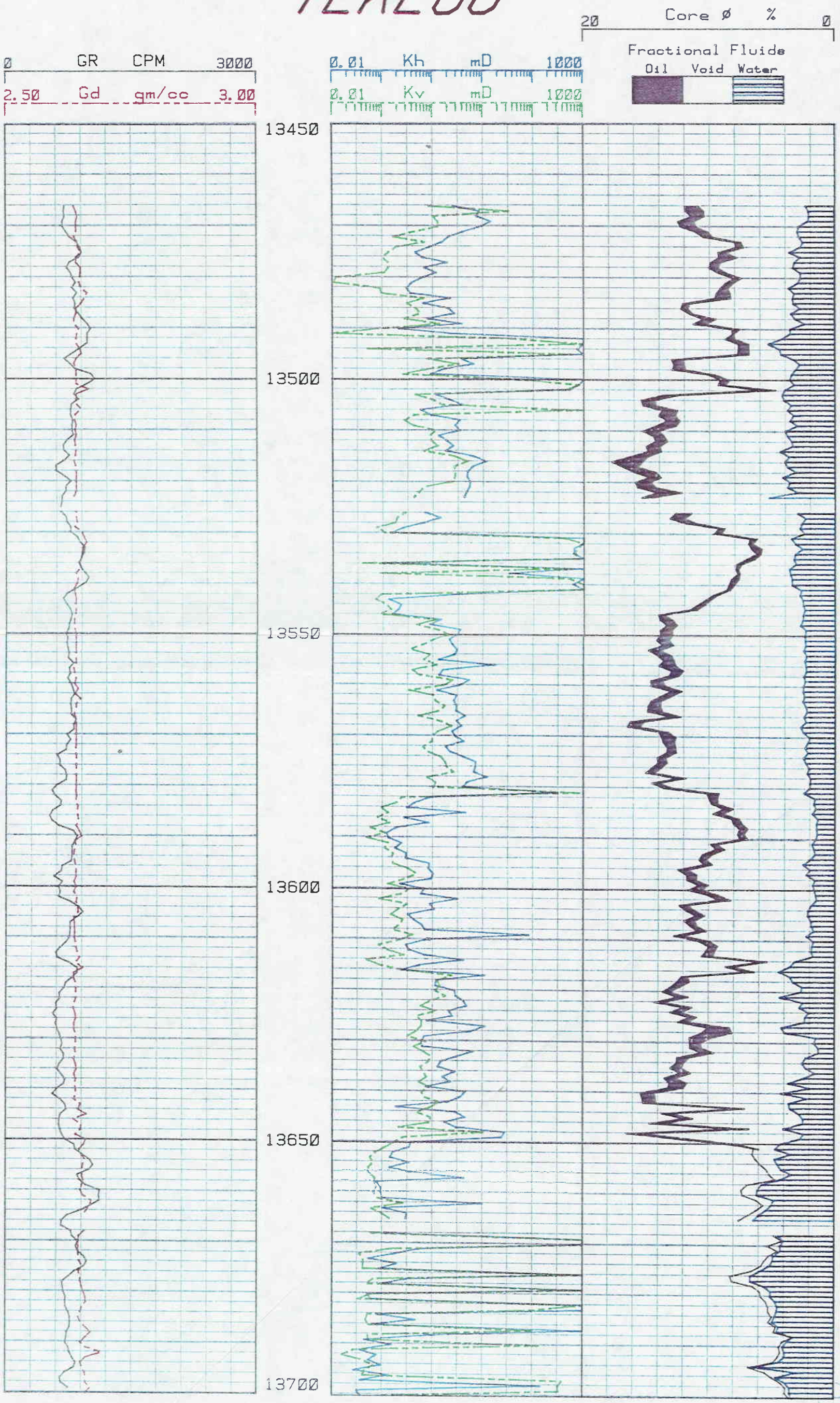

Copyright © Terra Tek Core Services All Rights Reserved

TERRA TEK CORE SERVICES INC.

360 Wakara Way. SLC Utah 84108 (801) 584-2480

ANSCHUTZ CORPORATION
ARE #6-20U

10 Feb 1982

TEKLOG

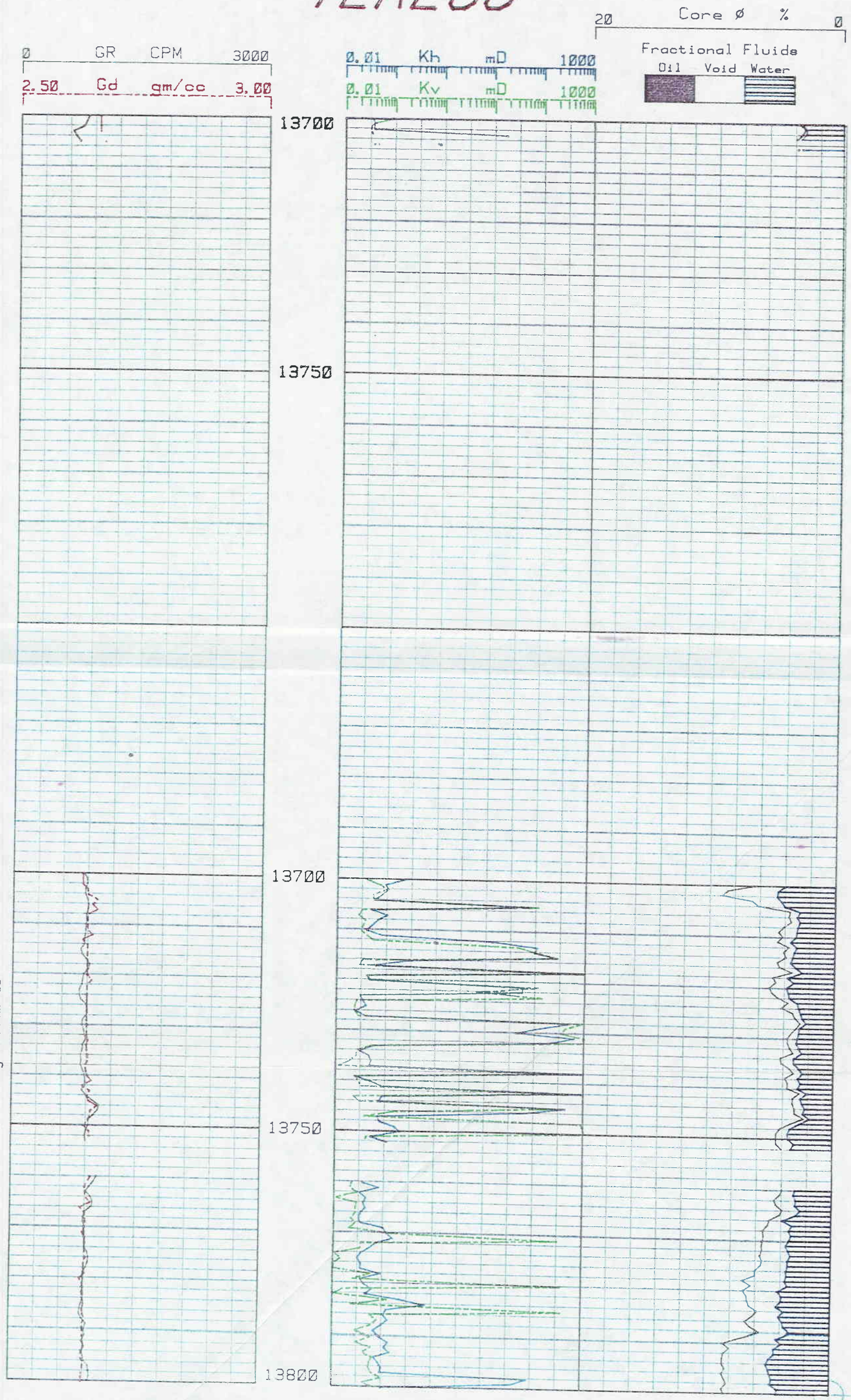

Copyright © Terra Tek Core Services All Rights Reserved

TERRA TEK CORE SERVICES INC.
360 Wakara Way, SLC Utah 84108 (801) 584-2480

ANSCHUTZ CORPORATION
ARE #6-20U

10 Feb 1982

TEKLOG

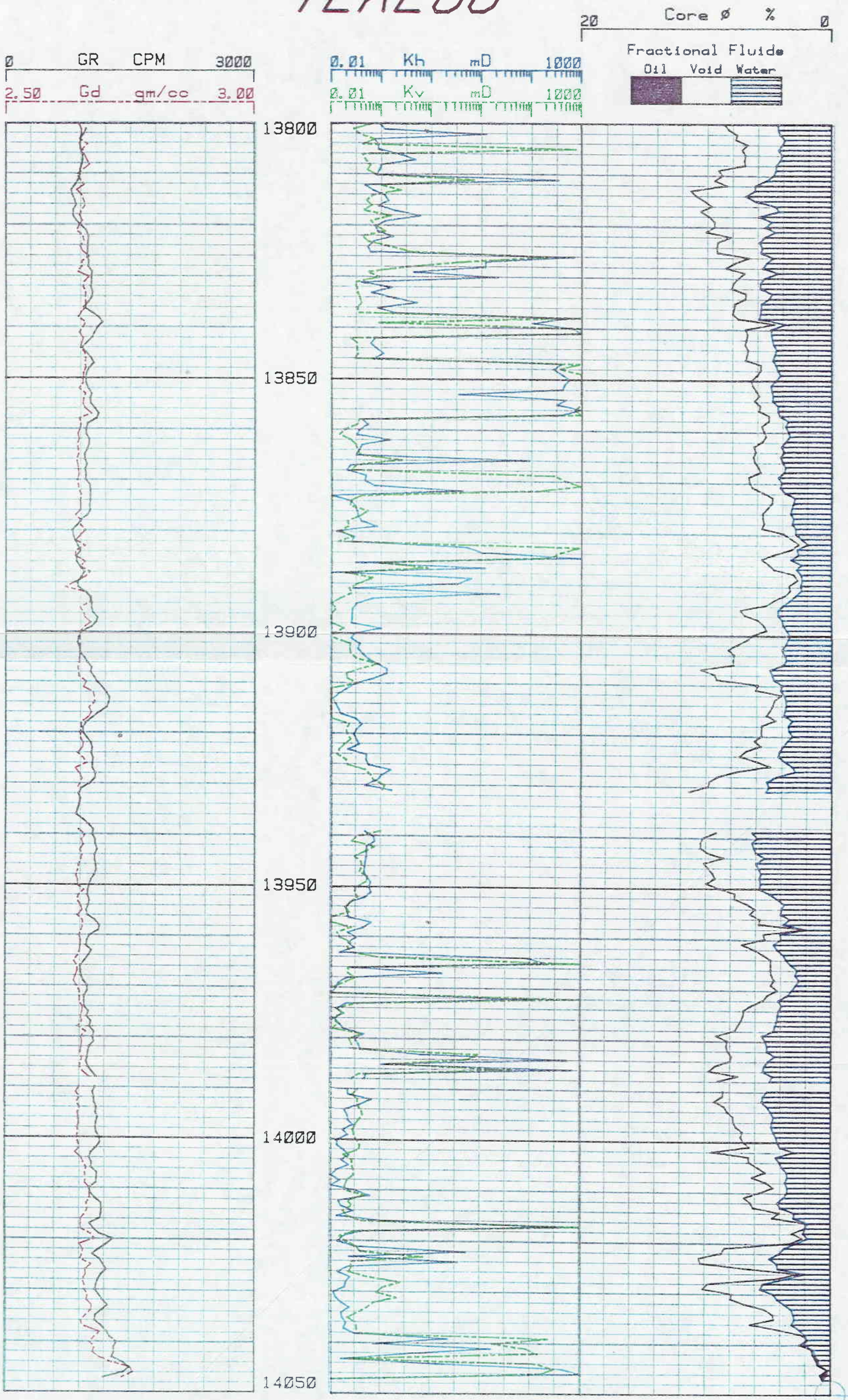

Copyright © Terra Tek Core Services All Rights Reserved

TerraTek
Core Services

Anschutz Corporation
Anschutz Ranch
East No. 6-20U Well
Summit County, Utah
TTCS File No. 91

MICROFICHE

RECEIVED
MAR 30 1982
DIVISION OF
OIL, GAS & MINING

University Research Park · 360 Wakara Way · Salt Lake City, Utah 84108 · (801) 584-2480 · TWX. 910-925-5284

TerraTek
Core Services

March 12, 1982

Allan Livingston
Anschutz Corporation
2400 Anaconda Tower
555 17th Street
Denver, CO 80202

Subject: Core Analysis Data; Anschutz Ranch East No. 6-20U Well; Summit County, Utah; TTCS File No. 91

Gentlemen:

Diamond coring equipment and water base mud were used to obtain 3.5 - inch diameter cores from the Nugget formation between 12996 and 14048 feet in the subject well. A representative of Terra Tek Core Services received the cores at the well site where they were preserved in plastic polytubing and transported to our Salt Lake City laboratory for routine full diameter analysis.

A surface core gamma log was recorded and is presented for correlation with downhole electrical surveys.

Residual fluid removal was accomplished by the Dean-Stark low temperature solvent extraction method. Porosities were determined by Boyles'law (helium) grain volumes and Archimedes (water) bulk volumes. Horizontal and vertical permeabilities to nitrogen were measured in a hassler sleeve using an orifice manometer and flowing miniscus to monitor downstream flow.

Data resulting from this analysis is tabulated on the following pages. Following the core analysis data is a summary reflecting average data by zones. Many of the permeability averages are high due to the influence of vertical fracture permeabilities that were included. Matrix permeability averages are reflected best in the Horz - 90° column.

Based on these analyses results, the Nugget formation between 12996 and 13651 feet (Sample Nos. 1 - 589) is predicted to be gas condensate productive at this well. Below 13651 feet, water production is possible, primarily through vertical fractures.

Special equipment was used at the well site to orient most of the cores while they were being cut. Data derived therefrom was used by Terra Tek Core Services to mark a North line on the cores where possible, and hence determine bedding strike and dip, and fracture orientation. This orientation data is included in the back of the report.

University Research Park · 360 Wakara Way · Salt Lake City, Utah 84108 · (801) 584-2480 · TWX. 910-925-5284

Per your request, the cores were slabbed and color photographs taken of the slab segments. These photographs, enlarged to 16 X 20 inches, have already been submitted to you.

The core slabs have been shipped to Amoco Production Company's core storage facility in Denver, Colorado. The core butts are being stored in our Salt Lake City warehouse awaiting further instructions.

We sincerely appreciate this opportunity to be of service.

Very truly yours,

Jack R. Good

Jack R. Good
Laboratory Director

JRG:lv

STATE OF UTAH
NATURAL RESOURCES & ENERGY
Oil, Gas & Mining

Scott M. Matheson, Governor
Temple A. Reynolds, Executive Director
Cleon B. Feight, Division Director

4241 State Office Building • Salt Lake City, UT 84114 • 801-533-5771

September 13, 1982

Anschutz Corporation
Att: Mark Buckland
2400 Anaconda Tower
555 Seventeenth Street
Denver, Colorado 80202

Re: Well No. Anschutz Ranch East #6-20U
Well No. Anschutz Ranch East #16-20U
Sec. 20, T. 4N, R. 8E.
Summit County, Utah
(March - August 1982)

Well No. Anschutz Ranch East #8-30UA
Sec. 30, T. 4N, R. 8E.
Summit County, Utah
(May- August 1982)

Well No. Anschutz Ranch East #16-30U
Sec. 30, T. 4N, R. 8E.
Summit County, Utah
(March- August 1982)

Gentlemen:

Our records indicate that you have not filed the monthly drilling reports for the months indicated above on the subject wells.

Rule C-22, General Rules and Regulations and Rules of Practice and Prcoedure, requires that said reports be filed on or before the sixteenth (16) day of the succeeding month. This report may be filed on Form OGC-1B, (U.S. Geological Survey Form 9-331) "Sundry Notices and Reports on Wells", or on company forms containing substantially the same information. We are enclosing forms for your convenience.

Your prompt attention to the above will be greatly appreciated.

Very truly yours,

DIVISION OF OIL, GAS AND MINING

Cari Furse

Cari Furse
Clerk Typist

Board/Charles R. Henderson, Chairman • John L. Bell • E. Steele McIntyre • Edward T. Beck
Robert R. Norman • Margaret R. Bird • Herm Olsen

an equal opportunity employer • please recycle paper

Form OGCC-1 b

STATE OF UTAH

OIL & GAS CONSERVATION COMMISSION

SUBMIT IN TRIPLICATE* (Other instructions on reverse side)

SUNDRY NOTICES AND REPORTS ON WELLS

(Do not use this form for proposals to drill or to deepen or plug back to a different reservoir. Use "APPLICATION FOR PERMIT—" for such proposals.)

1. OIL WELL [ ] GAS WELL [X] OTHER

2. NAME OF OPERATOR: The Anschutz Corp.

3. ADDRESS OF OPERATOR: 555 17th. St., Suite 2400, Denver, Co. 80202

4. LOCATION OF WELL (Report location clearly and in accordance with any State requirements.* See also space 17 below.) At surface: 936' FWL, 1291' FNL

5. LEASE DESIGNATION AND SERIAL NO.: Fee

6. IF INDIAN, ALLOTTEE OR TRIBE NAME: ---

7. UNIT AGREEMENT NAME: ---

8. FARM OR LEASE NAME: Anschutz Ranch East

9. WELL NO.: 6-20U

10. FIELD AND POOL, OR WILDCAT: Anschutz Ranch East

11. SEC., T., R., M., OR BLK. AND SURVEY OR AREA: Sec. 20, T4N, R8E

12. COUNTY OR PARISH: Summit

13. STATE: Utah

14. PERMIT NO.:

15. ELEVATIONS (Show whether DF, RT, GR, etc.): 7350' KB

16. **Check Appropriate Box To Indicate Nature of Notice, Report, or Other Data**

NOTICE OF INTENTION TO:				SUBSEQUENT REPORT OF:			
TEST WATER SHUT-OFF		PULL OR ALTER CASING		WATER SHUT-OFF		REPAIRING WELL	
FRACTURE TREAT		MULTIPLE COMPLETE		FRACTURE TREATMENT		ALTERING CASING	
SHOOT OR ACIDIZE	X	ABANDON*		SHOOTING OR ACIDIZING		ABANDONMENT*	
REPAIR WELL		CHANGE PLANS		(Other)			
(Other)							

(NOTE: Report results of multiple completion on Well Completion or Recompletion Report and Log form.)

17. DESCRIBE PROPOSED OR COMPLETED OPERATIONS (Clearly state all pertinent details, and give pertinent dates, including estimated date of starting any proposed work. If well is directionally drilled, give subsurface locations and measured and true vertical depths for all markers and zones pertinent to this work.)*

As outlined below, we propose to start well operations on or about September 20, 1982. Zones to be tested are in the Jurassic Nugget formation.

MIRU service unit, test BOP stack to 5000.
Kill well and RIH w/tubing and packer.
Retest perfs @ 13910'-13930'. Squeeze if water productive.
Perforate: 13680'-92', 13699'-708', 13716'-26', 13736'-46', 13772'-800'. 13830'=60'.
Test perfs, acidize if necessary, secure draw down, buildup data.
Perforate and test: 13514'-33', 13556'-80', 13606'-18', 13628'-50'.
Perforate and test: 13248'-68', 13292'-346', 13370'-92', 13418'-46', 13470'-90'.
Run 3 1/2" production tbg. w/5000# Tree
Run 48 hr. production test followed by build-up.

APPROVED BY THE STATE OF UTAH DIVISION OF OIL, GAS, AND MINING
DATE: 9/27/82
BY: [signature]

18. I hereby certify that the foregoing is true and correct

SIGNED David Holt TITLE Drlg/Prod. Engineer DATE 9-17-82

(This space for Federal or State office use)

APPROVED BY _____ TITLE _____ DATE _____

CONDITIONS OF APPROVAL, IF ANY:

*See Instructions on Reverse Side

M

THE ANSCHUTZ CORPORATION

2400 ANACONDA TOWER
555 SEVENTEENTH STREET
DENVER, COLORADO 80202
TELEPHONE 303-825-6100
TWX 910-931-2620

September 16, 1982

RECEIVED
SEP 22 1982
DIVISION OF
OIL, GAS & MINING

State of Utah
Dept. of Natural Resources
Division of Oil, Gas, & Mining

Gentlemen,

We are submitting Sundry Notices for work to be done on three wells in The Anschutz Ranch East field. The program is to perforate and test various Nugget formation intervals, and after testing, run a 3 1/2" production string. Sundry Notices are submitted in triplicate.

Sincerely,

David Hobbs

David Hobbs
Drilling Engineer

encl: 3

THE ANSCHUTZ CORPORATION

2400 ANACONDA TOWER
555 SEVENTEENTH STREET
DENVER, COLORADO 80202
TELEPHONE 303-825-6100
TWX 910-931-2620

September 29, 1982

State of Utah
Natural Resources and Energy
4241 State Office Building
Salt Lake City, Utah 84114

Attention: Cari Furse

Dear Ms. Furse

In regards to your notice dated September 13, 1982, the following wells have finished drilling on the dates shown:

ARE 6-20U	-	12/30/81	These are all located in sections 20 and 30; T4N R8E, Summit County, Utah.
ARE 16-20U	-	8/29/81	
ARE 8-30UA	-	5/26/82	
ARE 16-30A	-	12/23/81	

Our records show that all sundries were submitted up to rig release date and all rigs released were shown on the final sundry notices for each well. As we intend to complete these wells, all sundries to show intent have been filed 9-17-82.

If you have any questions, please contact me at (303) 825-6100.

Sincerely yours,

Mark Buckland

Mark Buckland
Jr. Drilling Engineer

MB/ahs

RECEIVED
OCT 04 1982
DIVISION OF
OIL, GAS & MINING

GEARHART
THE GO COMPANY

GEARHART INDUSTRIES, INC.
WIRELINE SERVICES
P.O. BOX 1258 • FORT WORTH, TEXAS 76101 • TELEPHONE 817/293-1775

HEWLETT PACKARD PRESSURE DATA

Company The Anschutz Corporation Location 20-4N-8E

Well Anschutz Ranch East 6-20 U. County Summit State Utah

Field Anschutz Ranch East Formation Date 10/07/82

RECEIVED
NOV 05 1982
DIVISION OF
OIL, GAS & MINING

GEARHART INDUSTRIES
PRESSURE BUILD-UP SURVEY

Well No.: ANSCHUTZ Date: 10/07/82 Gradient: 0.195PSI/ft
Tool positioned at: 13760 MD. 13650 TVD. 13650 S.S.

T+dt / dt	Time	dt(hrs)	deg F	P (PSIA)	P @ $$$$	Delta P	Comments
	3:41:0		114.6	3392.31	3399.53		Last reading 4000'
	3:49:0		137.2	3773.11	3780.33		10/07/82
	3:50:0		137.4	3781.03	3788.25		10/07/82
	3:51:0		137.5	3786.77	3793.99		10/07/82
	3:52:0		137.6	3791.25	3798.47		10/07/82
	3:53:0		137.6	3794.96	3802.18		10/07/82
	3:54:0		137.7	3798.00	3805.22		Last reading 6000'
	4:1 :0		161.2	4184.15	4191.37		First reading 8000'
	4:2 :0		161.4	4194.14	4201.36		10/07/82
	4:3 :0		161.5	4198.49	4205.71		10/07/82
	4:4 :0		161.6	4200.51	4207.73		10/07/82
	4:5 :0		161.6	4201.41	4208.63		10/07/82
	4:6 :0		161.7	4201.81	4209.03		Last reading 8000'
	4:14:0		184.9	4606.52	4613.74		First reading 10000'
	4:15:0		185.0	4606.86	4614.08		10/07/82
	4:16:0		185.1	4604.53	4611.75		10/07/82
	4:17:0		185.1	4601.09	4608.31		10/07/82
	4:18:0		185.2	4597.93	4605.15		10/07/82
	4:19:0		185.2	4595.16	4602.38		Last reading 10000'
	4:26:0		207.9	5017.66	5024.88		First reading 12000'
	4:27:0		208.1	5015.54	5022.76		10/07/82
	4:28:0		208.2	5009.38	5016.60		10/07/82
	4:29:0		208.2	5002.30	5009.52		10/07/82
	4:30:0		208.3	4995.34	5002.56		10/07/82
	4:31:0		208.2	4989.01	4996.23		Last reading 12000'
	5:17:0		218.9	5320.26	5327.48		Start 6hr flow
	5:18:0		218.9	5320.51	5327.73		readings--13,760ft
	5:19:0		218.9	5318.80	5326.02		10/07/82
	5:20:0		219.0	5320.53	5327.75		10/07/82
	5:21:0		219.0	5320.11	5327.33		10/07/82
	5:22:0		219.0	5320.44	5327.66		10/07/82
	5:30:0		219.0	5321.92	5329.14		10/07/82
	5:40:0		219.0	5321.87	5329.09		10/07/82
	5:50:0		219.1	5323.79	5331.01		10/07/82
	6:0 :0		219.2	5324.47	5331.69		10/07/82
	6:10:0		219.2	5325.95	5333.17		10/07/82
	6:20:0		219.2	5328.51	5335.73		10/07/82
	6:30:0		219.3	5333.61	5340.83		10/07/82
	6:40:0		219.4	5343.09	5350.31		10/07/82
	6:50:0		219.4	5347.85	5355.07		10/07/82
	7:0 :0		219.5	5352.48	5359.70		10/07/82
	7:10:0		219.4	5334.62	5341.84		10/07/82
	7:20:0		218.9	5250.52	5257.74		Open choke to 30/64
	7:30:0		218.5	5210.47	5217.69		10/07/82
	7:40:0		218.4	5214.63	5221.85		10/07/82
	7:50:0		218.6	5255.13	5262.35		10/07/82
	8:0 :0		218.6	5231.04	5238.26		Open choke to 40/64
	8:10:0		218.5	5215.51	5222.73		10/07/82
	8:20:0		218.7	5255.34	5262.56		10/07/82
	8:30:0		218.7	5245.16	5252.38		10/07/82
	8:40:0		218.6	5231.41	5238.63		10/07/82
	8:50:0		218.6	5227.12	5234.34		10/07/82
	9:0 :0		218.6	5221.09	5228.31		10/07/82
	9:10:0		218.6	5217.69	5224.91		10/07/82
	9:20:0		218.6	5216.60	5223.82		10/07/82

GEARHART INDUSTRIES
PRESSURE BUILD-UP SURVEY

Well No.: ANSCHUTZ Date: 10/07/82 Gradient: 0.195PSI/ft
Tool positioned at: 13760 MD. 13650 TVD. 13650 S.S.

T+dt / dt	Time	dt(hrs)	deg F	P (PSIA)	P @ $$$$	Delta P	Comments
	9:30:0		218.6	5218.15	5225.37		10/07/82
	9:40:0		218.7	5223.72	5230.94		10/07/82
	9:50:0		218.8	5234.58	5241.80		10/07/82
	10:0 :0		218.6	5213.29	5220.51		10/07/82
	10:10:0		218.6	5202.08	5209.30		10/07/82
	10:20:0		218.7	5201.11	5208.33		Shut-in
4.149E 02	10:30:0	0.167	218.8	5243.60	5250.82	42.49	10/07/82
3.773E 02	10:31:0	0.183	218.8	5243.66	5250.88	42.55	Start 10 sec reading
3.716E 02	10:31:10	0.186	218.8	5240.65	5247.87	39.54	10/07/82
3.662E 02	10:31:20	0.189	218.8	5251.13	5258.35	50.02	10/07/82
3.609E 02	10:31:30	0.192	218.8	5260.34	5267.56	59.23	10/07/82
3.558E 02	10:31:40	0.194	218.9	5266.58	5273.80	65.47	10/07/82
3.508E 02	10:31:50	0.197	218.9	5271.90	5279.12	70.79	10/07/82
3.459E 02	10:32:0	0.200	218.9	5276.42	5283.64	75.31	10/07/82
3.412E 02	10:32:10	0.203	218.9	5280.44	5287.66	79.33	10/07/82
3.366E 02	10:32:20	0.206	218.9	5284.05	5291.27	82.94	10/07/82
3.321E 02	10:32:30	0.208	218.9	5287.34	5294.56	86.23	10/07/82
3.277E 02	10:32:40	0.211	218.9	5290.38	5297.60	89.27	10/07/82
3.235E 02	10:32:50	0.214	218.9	5293.19	5300.41	92.08	10/07/82
3.194E 02	10:33:0	0.217	218.9	5295.85	5303.07	94.74	10/07/82
3.153E 02	10:33:10	0.219	218.9	5298.35	5305.57	97.24	10/07/82
3.114E 02	10:33:20	0.222	218.9	5300.69	5307.91	99.58	10/07/82
3.076E 02	10:33:30	0.225	218.9	5302.89	5310.11	101.78	10/07/82
3.038E 02	10:33:40	0.228	218.9	5304.97	5312.19	103.86	10/07/82
3.002E 02	10:33:50	0.231	218.9	5306.95	5314.17	105.84	10/07/82
2.966E 02	10:34:0	0.233	219.0	5308.86	5316.08	107.75	10/07/82
2.932E 02	10:34:10	0.236	218.9	5310.63	5317.85	109.52	10/07/82
2.898E 02	10:34:20	0.239	219.0	5312.41	5319.63	111.30	10/07/82
2.864E 02	10:34:30	0.242	218.9	5314.03	5321.25	112.92	10/07/82
2.832E 02	10:34:40	0.244	219.0	5315.65	5322.87	114.54	10/07/82
2.800E 02	10:34:50	0.247	218.9	5317.14	5324.36	116.03	10/07/82
2.769E 02	10:35:0	0.250	219.0	5318.65	5325.87	117.54	10/07/82
2.739E 02	10:35:10	0.253	219.0	5320.05	5327.27	118.94	10/07/82
2.709E 02	10:35:20	0.256	219.0	5321.39	5328.61	120.28	10/07/82
2.680E 02	10:35:30	0.258	219.1	5322.73	5329.95	121.62	10/07/82
2.652E 02	10:35:40	0.261	219.0	5323.94	5331.16	122.83	10/07/82
2.624E 02	10:35:50	0.264	219.0	5325.14	5332.36	124.03	10/07/82
2.597E 02	10:36:0	0.267	219.0	5326.28	5333.50	125.17	10/07/82
2.570E 02	10:36:10	0.269	219.0	5327.37	5334.59	126.26	10/07/82
2.544E 02	10:36:20	0.272	219.1	5328.47	5335.69	127.36	10/07/82
2.518E 02	10:36:30	0.275	219.1	5329.51	5336.73	128.40	10/07/82
2.493E 02	10:36:40	0.278	219.0	5330.46	5337.68	129.35	10/07/82
2.469E 02	10:36:50	0.281	219.1	5331.46	5338.68	130.35	10/07/82
2.445E 02	10:37:0	0.283	219.1	5332.39	5339.61	131.28	10/07/82
2.421E 02	10:37:10	0.286	219.1	5333.29	5340.51	132.18	10/07/82
2.398E 02	10:37:20	0.289	219.1	5334.17	5341.39	133.06	10/07/82
2.375E 02	10:37:30	0.292	219.1	5335.02	5342.24	133.91	10/07/82
2.353E 02	10:37:40	0.294	219.1	5335.85	5343.07	134.74	10/07/82
2.331E 02	10:37:50	0.297	219.1	5336.63	5343.85	135.52	10/07/82
2.309E 02	10:38:0	0.300	219.1	5337.43	5344.65	136.32	10/07/82
2.288E 02	10:38:10	0.303	219.1	5338.19	5345.41	137.08	10/07/82
2.268E 02	10:38:20	0.306	219.1	5338.91	5346.13	137.80	10/07/82
2.247E 02	10:38:30	0.308	219.2	5339.65	5346.87	138.54	10/07/82
2.227E 02	10:38:40	0.311	219.1	5340.30	5347.52	139.19	10/07/82
2.208E 02	10:38:50	0.314	219.1	5340.96	5348.18	139.85	10/07/82

GEARHART INDUSTRIES
PRESSURE BUILD-UP SURVEY

Well No.: ANSCHUTZ Date: 10/07/82 Gradient: 0.195PSI/ft
Tool positioned at: 13760 MD. 13650 TVD. 13650 S.S.

T+dt / dt	Time	dt(hrs)	deg F	P (PSIA)	P @ $$$$	Delta P	Comments
2.188E 02	10:39:0	0.317	219.2	5341.63	5348.85	140.52	10/07/82
2.169E 02	10:39:10	0.319	219.1	5342.23	5349.45	141.12	10/07/82
2.151E 02	10:39:20	0.322	219.1	5342.84	5350.06	141.73	10/07/82
2.132E 02	10:39:30	0.325	219.2	5343.49	5350.71	142.38	10/07/82
2.114E 02	10:39:40	0.328	219.2	5344.09	5351.31	142.98	10/07/82
2.097E 02	10:39:50	0.331	219.2	5344.65	5351.87	143.54	10/07/82
2.079E 02	10:40:0	0.333	219.1	5345.16	5352.38	144.05	10/07/82
2.062E 02	10:40:10	0.336	219.2	5345.75	5352.97	144.64	10/07/82
2.045E 02	10:40:20	0.339	219.2	5346.29	5353.51	145.18	10/07/82
2.029E 02	10:40:30	0.342	219.2	5346.81	5354.03	145.70	10/07/82
2.013E 02	10:40:40	0.344	219.2	5347.31	5354.53	146.20	10/07/82
1.997E 02	10:40:50	0.347	219.2	5347.81	5355.03	146.70	10/07/82
1.981E 02	10:41:0	0.350	219.1	5348.26	5355.48	147.15	10/07/82
1.965E 02	10:41:10	0.353	219.2	5348.78	5356.00	147.67	10/07/82
1.950E 02	10:41:20	0.356	219.2	5349.23	5356.45	148.12	10/07/82
1.935E 02	10:41:30	0.358	219.2	5349.71	5356.93	148.60	10/07/82
1.920E 02	10:41:40	0.361	219.2	5350.15	5357.37	149.04	10/07/82
1.906E 02	10:41:50	0.364	219.2	5350.58	5357.80	149.47	10/07/82
1.891E 02	10:42:0	0.367	219.2	5351.02	5358.24	149.91	Start 30 sec reading
1.849E 02	10:42:30	0.375	219.3	5352.24	5359.46	151.13	10/07/82
1.809E 02	10:43:0	0.383	219.2	5353.38	5360.60	152.27	10/07/82
1.771E 02	10:43:30	0.392	219.2	5354.47	5361.69	153.36	10/07/82
1.735E 02	10:44:0	0.400	219.2	5355.49	5362.71	154.38	10/07/82
1.699E 02	10:44:30	0.408	219.2	5356.45	5363.67	155.34	10/07/82
1.666E 02	10:45:0	0.417	219.3	5357.39	5364.61	156.28	10/07/82
1.633E 02	10:45:30	0.425	219.3	5358.28	5365.50	157.17	10/07/82
1.602E 02	10:46:0	0.433	219.3	5359.16	5366.38	158.05	10/07/82
1.572E 02	10:46:30	0.442	219.3	5359.97	5367.19	158.86	10/07/82
1.543E 02	10:47:0	0.450	219.2	5360.70	5367.92	159.59	10/07/82
1.515E 02	10:47:30	0.458	219.3	5361.50	5368.72	160.39	10/07/82
1.488E 02	10:48:0	0.467	219.3	5362.20	5369.42	161.09	10/07/82
1.462E 02	10:48:30	0.475	219.3	5362.87	5370.09	161.76	10/07/82
1.437E 02	10:49:0	0.483	219.4	5363.56	5370.78	162.45	10/07/82
1.413E 02	10:49:30	0.492	219.4	5364.20	5371.42	163.09	10/07/82
1.390E 02	10:50:0	0.500	219.4	5364.85	5372.07	163.74	10/07/82
1.367E 02	10:50:30	0.508	219.3	5365.37	5372.59	164.26	10/07/82
1.345E 02	10:51:0	0.517	219.4	5365.94	5373.16	164.83	10/07/82
1.324E 02	10:51:30	0.525	219.4	5366.45	5373.67	165.34	10/07/82
1.303E 02	10:52:0	0.533	219.3	5366.95	5374.17	165.84	10/07/82
1.283E 02	10:52:30	0.542	219.3	5367.46	5374.68	166.35	10/07/82
1.264E 02	10:53:0	0.550	219.3	5367.94	5375.16	166.83	10/07/82
1.245E 02	10:53:30	0.558	219.3	5368.41	5375.63	167.30	10/07/82
1.227E 02	10:54:0	0.567	219.3	5368.82	5376.04	167.71	10/07/82
1.210E 02	10:54:30	0.575	219.3	5369.19	5376.41	168.08	10/07/82
1.193E 02	10:55:0	0.583	219.4	5369.55	5376.77	168.44	10/07/82
1.176E 02	10:55:30	0.592	219.4	5369.92	5377.14	168.81	10/07/82
1.160E 02	10:56:0	0.600	219.4	5370.25	5377.47	169.14	10/07/82
1.144E 02	10:56:30	0.608	219.4	5370.61	5377.83	169.50	10/07/82
1.129E 02	10:57:0	0.617	219.4	5370.92	5378.14	169.81	10/07/82
1.114E 02	10:57:30	0.625	219.4	5371.18	5378.40	170.07	10/07/82
1.099E 02	10:58:0	0.633	219.4	5371.54	5378.76	170.43	10/07/82
1.085E 02	10:58:30	0.642	219.4	5371.90	5379.12	170.79	10/07/82
1.071E 02	10:59:0	0.650	219.4	5372.27	5379.49	171.16	10/07/82
1.058E 02	10:59:30	0.658	219.4	5372.60	5379.82	171.49	10/07/82
1.045E 02	11:0 :0	0.667	219.4	5372.94	5380.16	171.83	10/07/82

GEARHART INDUSTRIES
PRESSURE BUILD-UP SURVEY

Well No.: ANSCHUTZ Date: 10/07/82 Gradient: 0.195PSI/ft
Tool positioned at: 13760 MD. 13650 TVD. 13650 S.S.

T+dt / dt	Time	dt(hrs)	deg F	P (PSIA)	P @ $$$$	Delta P	Comments
1.032E 02	11:0 :30	0.675	219.5	5373.31	5380.53	172.20	10/07/82
1.019E 02	11:1 :0	0.683	219.5	5373.61	5380.83	172.50	10/07/82
1.007E 02	11:1 :30	0.692	219.5	5373.95	5381.17	172.84	10/07/82
9.954E 01	11:2 :0	0.700	219.5	5374.21	5381.43	173.10	10/07/82
9.838E 01	11:2 :30	0.708	219.5	5374.51	5381.73	173.40	10/07/82
9.725E 01	11:3 :0	0.717	219.4	5374.77	5381.99	173.66	10/07/82
9.614E 01	11:3 :30	0.725	219.5	5375.10	5382.32	173.99	10/07/82
9.506E 01	11:4 :0	0.733	219.5	5375.41	5382.63	174.30	10/07/82
9.401E 01	11:4 :30	0.742	219.4	5375.63	5382.85	174.52	10/07/82
9.297E 01	11:5 :0	0.750	219.5	5375.92	5383.14	174.81	10/07/82
9.196E 01	11:5 :30	0.758	219.5	5376.16	5383.38	175.05	10/07/82
9.097E 01	11:6 :0	0.767	219.5	5376.43	5383.65	175.32	Start 1 min reading
8.906E 01	11:7 :0	0.783	219.5	5376.92	5384.14	175.81	10/07/82
8.723E 01	11:8 :0	0.800	219.5	5377.41	5384.63	176.30	10/07/82
8.547E 01	11:9 :0	0.817	219.5	5377.85	5385.07	176.74	10/07/82
8.378E 01	11:10:0	0.833	219.5	5378.28	5385.50	177.17	10/07/82
8.215E 01	11:11:0	0.850	219.5	5378.67	5385.89	177.56	10/07/82
8.059E 01	11:12:0	0.867	219.5	5379.06	5386.28	177.95	10/07/82
7.909E 01	11:13:0	0.883	219.5	5379.45	5386.67	178.34	10/07/82
7.764E 01	11:14:0	0.900	219.5	5379.81	5387.03	178.70	10/07/82
7.625E 01	11:15:0	0.917	219.6	5380.20	5387.42	179.09	10/07/82
7.491E 01	11:16:0	0.933	219.5	5380.50	5387.72	179.39	10/07/82
7.361E 01	11:17:0	0.950	219.6	5380.84	5388.06	179.73	10/07/82
7.236E 01	11:18:0	0.967	219.6	5381.15	5388.37	180.04	10/07/82
7.115E 01	11:19:0	0.983	219.6	5381.46	5388.68	180.35	10/07/82
6.998E 01	11:20:0	1.000	219.6	5381.76	5388.98	180.65	10/07/82
6.885E 01	11:21:0	1.017	219.7	5382.06	5389.28	180.95	10/07/82
6.775E 01	11:22:0	1.033	219.6	5382.32	5389.54	181.21	10/07/82
6.670E 01	11:23:0	1.050	219.6	5382.58	5389.80	181.47	10/07/82
6.567E 01	11:24:0	1.067	219.6	5382.87	5390.09	181.76	10/07/82
6.467E 01	11:25:0	1.083	219.6	5383.11	5390.33	182.00	10/07/82
6.371E 01	11:26:0	1.100	219.7	5383.40	5390.62	182.29	10/07/82
6.277E 01	11:27:0	1.117	219.6	5383.61	5390.83	182.50	10/07/82
6.186E 01	11:28:0	1.133	219.6	5383.85	5391.07	182.74	10/07/82
6.098E 01	11:29:0	1.150	219.7	5384.11	5391.33	183.00	10/07/82
6.013E 01	11:30:0	1.167	219.7	5384.31	5391.53	183.20	10/07/82
5.929E 01	11:31:0	1.183	219.7	5384.52	5391.74	183.41	10/07/82
5.848E 01	11:32:0	1.200	219.7	5384.72	5391.94	183.61	10/07/82
5.770E 01	11:33:0	1.217	219.7	5384.91	5392.13	183.80	10/07/82
5.693E 01	11:34:0	1.233	219.7	5385.13	5392.35	184.02	10/07/82
5.618E 01	11:35:0	1.250	219.7	5385.35	5392.57	184.24	10/07/82
5.546E 01	11:36:0	1.267	219.7	5385.51	5392.73	184.40	10/07/82
5.475E 01	11:37:0	1.283	219.8	5385.75	5392.97	184.64	10/07/82
5.406E 01	11:38:0	1.300	219.7	5385.91	5393.13	184.80	10/07/82
5.339E 01	11:39:0	1.317	219.7	5386.11	5393.33	185.00	10/07/82
5.274E 01	11:40:0	1.333	219.8	5386.29	5393.51	185.18	10/07/82
5.210E 01	11:41:0	1.350	219.7	5386.40	5393.62	185.29	10/07/82
5.147E 01	11:42:0	1.367	219.7	5386.58	5393.80	185.47	10/07/82
5.087E 01	11:43:0	1.383	219.7	5386.76	5393.98	185.65	10/07/82
5.027E 01	11:44:0	1.400	219.7	5386.89	5394.11	185.78	10/07/82
4.969E 01	11:45:0	1.417	219.7	5387.09	5394.31	185.98	10/07/82
4.913E 01	11:46:0	1.433	219.7	5387.26	5394.48	186.15	10/07/82
4.857E 01	11:47:0	1.450	219.7	5387.43	5394.65	186.32	10/07/82
4.803E 01	11:48:0	1.467	219.7	5387.60	5394.82	186.49	10/07/82
4.750E 01	11:49:0	1.483	219.7	5387.76	5394.98	186.65	10/07/82

GEARHART INDUSTRIES
PRESSURE BUILD-UP SURVEY

Well No.: ANSCHUTZ Date: 10/07/82 Gradient: 0.195PSI/ft
Tool positioned at: 13760 MD. 13650 TVD. 13650 S.S.

T+dt / dt	Time	dt(hrs)	deg F	P (PSIA)	P @ $$$$	Delta P	Comments
4.699E 01	11:50:0	1.500	219.8	5387.93	5395.15	186.82	10/07/82
4.648E 01	11:51:0	1.517	219.7	5389.05	5395.27	186.94	10/07/82
4.599E 01	11:52:0	1.533	219.8	5388.25	5395.47	187.14	10/07/82
4.550E 01	11:53:0	1.550	219.8	5388.38	5395.60	187.27	10/07/82
4.503E 01	11:54:0	1.567	219.7	5388.50	5395.72	187.39	10/07/82
4.457E 01	11:55:0	1.583	219.7	5388.61	5395.83	187.50	10/07/82
4.411E 01	11:56:0	1.600	219.7	5388.75	5395.97	187.64	10/07/82
4.367E 01	11:57:0	1.617	219.8	5388.87	5396.09	187.76	10/07/82
4.323E 01	11:58:0	1.633	219.8	5389.02	5396.24	187.91	10/07/82
4.281E 01	11:59:0	1.650	219.8	5389.18	5396.40	188.07	10/07/82
4.239E 01	12:0 :0	1.667	219.7	5389.25	5396.47	188.14	Start 10 min reading
3.863E 01	12:10:0	1.833	219.8	5390.34	5397.56	189.23	10/07/82
3.549E 01	12:20:0	2.000	219.8	5390.64	5397.86	189.53	10/07/82
3.284E 01	12:30:0	2.167	219.9	5390.98	5398.20	189.87	10/07/82
3.056E 01	12:40:0	2.333	219.9	5391.14	5398.36	190.03	10/07/82
2.859E 01	12:50:0	2.500	219.9	5391.27	5398.49	190.16	10/07/82
2.687E 01	13:0 :0	2.667	220.0	5391.33	5398.55	190.22	10/07/82
2.535E 01	13:10:0	2.833	220.0	5391.34	5398.56	190.23	10/07/82
2.399E 01	13:20:0	3.000	220.1	5391.39	5398.61	190.28	10/07/82
2.278E 01	13:30:0	3.167	220.0	5391.24	5398.46	190.13	10/07/82
10/07/82	13:43:0		205.5	4999.24			First reading 12000'
10/07/82	13:44:0		205.5	5000.68			
10/07/82	13:45:0		205.4	5006.00			
10/07/82	13:46:0		205.3	5011.76			
10/07/82	13:47:0		205.2	5017.09			
10/07/82	13:48:0		205.3	5021.65			
10/07/82	13:49:0		205.2	5025.51			
10/07/82	13:50:0		205.2	5028.73			
10/07/82	13:51:0		205.2	5031.39			
10/07/82	13:52:0		205.1	5033.60			
10/07/82	13:53:0		205.1	5035.46			
10/07/82	13:54:0		205.0	5036.84			
10/07/82	13:55:0		205.1	5038.11			
10/07/82	13:56:0		205.0	5039.24			
10/07/82	13:57:0		205.0	5040.12			
10/07/82	13:58:0		204.9	5040.81			
10/07/82	13:59:0		204.9	5041.40			
10/07/82	14:0 :0		204.9	5041.94			
10/07/82	14:1 :0		204.9	5042.38			
10/07/82	14:2 :0		204.9	5042.75			Last reading 12000'
10/07/82	14:9 :0		0.0	4606.84			
10/07/82	14:12:0		185.0	4624.93			First reading 10000'
10/07/82	14:13:0		185.0	4630.80			
10/07/82	14:14:0		185.0	4635.65			
10/07/82	14:15:0		185.0	4639.65			
10/07/82	14:16:0		185.0	4642.90			
10/07/82	14:17:0		185.0	4645.52			
10/07/82	14:18:0		185.0	4647.64			
10/07/82	14:19:0		185.0	4649.35			
10/07/82	14:20:0		185.0	4650.75			
10/07/82	14:21:0		185.0	4651.87			
10/07/82	14:22:0		185.0	4652.77			
10/07/82	14:23:0		185.0	4653.49			
10/07/82	14:24:0		185.0	4654.08			
10/07/82	14:25:0		185.0	4654.56			

GEARHART INDUSTRIES
PRESSURE BUILD-UP SURVEY

Well No.: ANSCHUTZ Date: 10/07/82 Gradient: 0.195PSI/ft
Tool positioned at: 13760 MD. 13650 TVD. 13650 S.S.

T+dt / dt	Time	dt(hrs)	deg F	P (PSIA)	P @ $$$$	Delta P	Comments
10/07/82	14:26:0		185.0	4654.96			
10/07/82	14:27:0		185.0	4655.26			
10/07/82	14:28:0		185.0	4655.50			Last reading 10000'
10/07/82	14:34:0		161.0	4245.14			First reading 8000'
10/07/82	14:35:0		161.0	4244.58			
10/07/82	14:36:0		161.0	4247.24			
10/07/82	14:37:0		161.0	4249.93			
10/07/82	14:38:0		161.0	4252.20			
10/07/82	14:39:0		161.0	4253.92			
10/07/82	14:40:0		161.0	4255.15			
10/07/82	14:41:0		161.0	4256.04			
10/07/82	14:42:0		161.0	4256.61			
10/07/82	14:43:0		161.0	4257.07			
10/07/82	14:44:0		161.0	4257.38			
10/07/82	14:45:0		161.0	4257.65			Last reading 8000'
10/07/82	14:52:0		137.0	3871.93			First reading 6000'
10/07/82	14:53:0		137.0	3869.97			
10/07/82	14:54:0		137.0	3868.44			
10/07/82	14:55:0		137.0	3866.76			
10/07/82	14:56:0		137.0	3865.02			
10/07/82	14:57:0		137.0	3863.28			
10/07/82	14:58:0		137.0	3861.67			
10/07/82	14:59:0		137.0	3860.18			
10/07/82	15:0 :0		137.0	3858.35			
10/07/82	15:1 :0		137.0	3857.68			
10/07/82	15:2 :0		137.0	3856.67			
10/07/82	15:3 :0		137.0	3855.78			
10/07/82	15:4 :0		137.0	3855.04			
10/07/82	15:5 :0		137.0	3854.39			
10/07/82	15:6 :0		137.0	3853.83			
10/07/82	15:7 :0		137.0	3853.32			
10/07/82	15:8 :0		137.0	3852.91			
10/07/82	15:9 :0		137.0	3852.55			Last reading 6000'
10/07/82	15:14:0		114.0	3504.61			First reading 4000'
10/07/82	15:15:0		114.0	3501.39			
10/07/82	15:16:0		114.0	3498.48			
10/07/82	15:17:0		114.0	3490.87			
10/07/82	15:18:0		114.0	3485.19			
10/07/82	15:19:0		114.0	3479.85			
10/07/82	15:20:0		114.0	3475.00			
10/07/82	15:21:0		114.0	3470.66			
10/07/82	15:22:0		114.0	3466.70			
10/07/82	15:23:0		114.0	3463.24			
10/07/82	15:24:0		114.0	3460.20			
10/07/82	15:25:0		114.0	3457.60			
10/07/82	15:26:0		114.0	3455.39			
10/07/82	15:27:0		114.0	3453.50			
10/07/82	15:28:0		114.0	3451.91			
10/07/82	15:29:0		114.0	3450.55			
10/07/82	15:30:0		114.0	3449.41			
10/07/82	15:31:0		114.0	3448.41			
10/07/82	15:32:0		114.0	3447.59			
10/07/82	15:33:0		114.0	3446.88			
10/07/82	15:34:0		114.0	3446.36			Last reading 4000'
10/07/82	15:41:0		89.0	3137.07			First reading 2000'

GEARHART INDUSTRIES
PRESSURE BUILD-UP SURVEY

Well No.: ANSCHUTZ Date: 10/07/82 Gradient: 0.195PSI/ft
Tool positioned at: 13760 MD. 13650 TVD. 13650 S.S.

T+dt / dt	Time	dt(hrs)	deg F	P (PSIA)	P @ $$$$	Delta P	Comments
10/07/82	15:42:0		89.0	3129.62			
10/07/82	15:43:0		89.0	3120.64			
10/07/82	15:44:0		89.0	3111.63			
10/07/82	15:45:0		89.0	3103.39			
10/07/82	15:46:0		89.0	3096.18			
10/07/82	15:47:0		89.0	3089.73			
10/07/82	15:48:0		89.0	3084.15			
10/07/82	15:49:0		89.0	3079.34			
10/07/82	15:50:0		89.0	3075.25			
10/07/82	15:51:0		89.0	3071.72			
10/07/82	15:52:0		89.0	3068.71			
10/07/82	15:53:0		89.0	3066.16			
10/07/82	15:54:0		89.0	3063.96			
10/07/82	15:55:0		89.0	3062.06			
10/07/82	15:56:0		89.0	3060.47			
10/07/82	15:57:0		89.0	3059.11			
10/07/82	15:58:0		89.0	3057.90			
10/07/82	15:59:0		89.0	3056.90			
10/07/82	16:0 :0		89.0	3056.02			
10/07/82	16:1 :0		89.0	3055.26			Last reading 2000'
10/07/82	16:2 :0		89.0	3054.63			End of Data

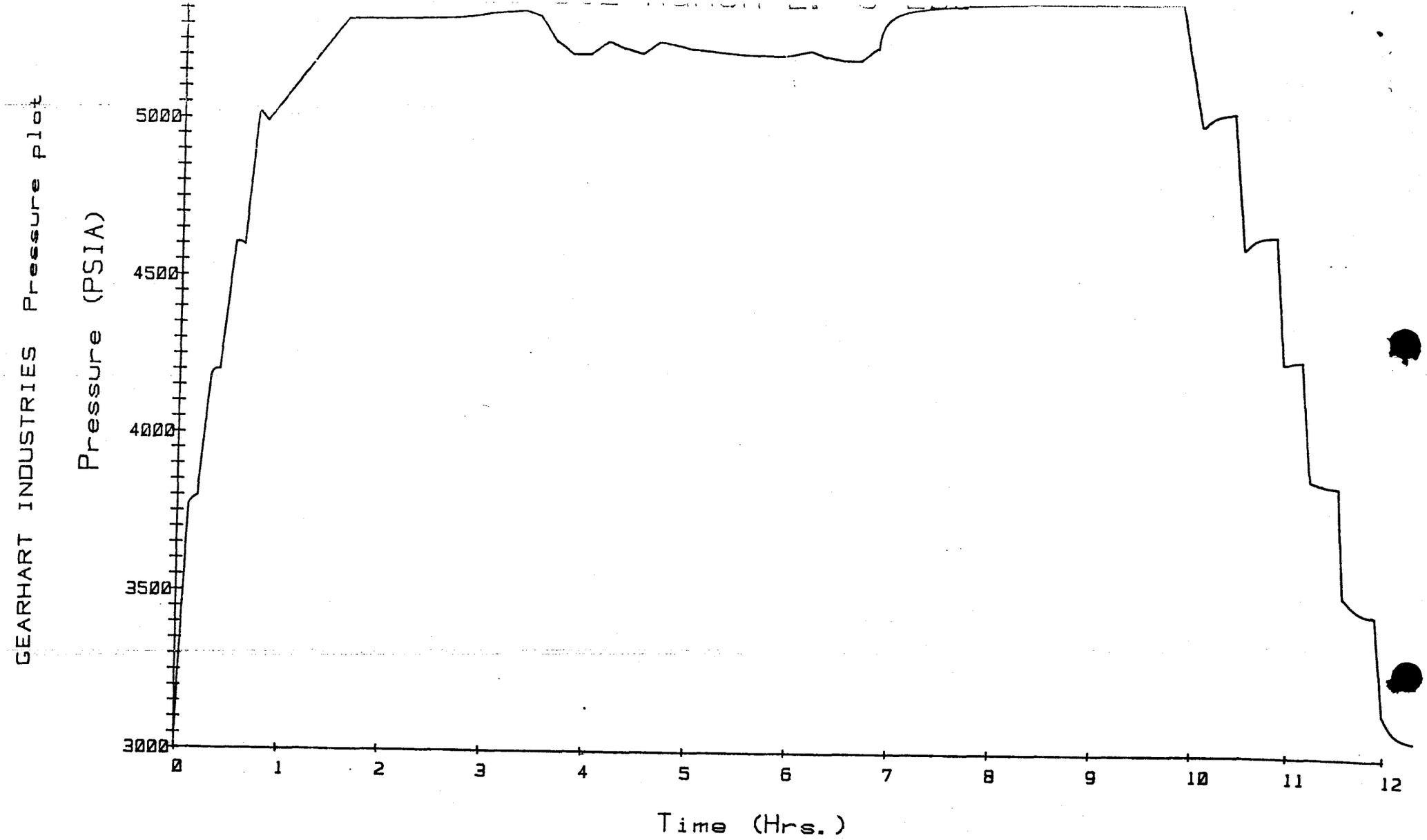
GEARHART INDUSTRIES Pressure plot
Pressure (PSIA)
5000
4500
4000
3500
3000
0
1
2
3
4
5
6
7
8
9
10
11
12
Time (Hrs.)

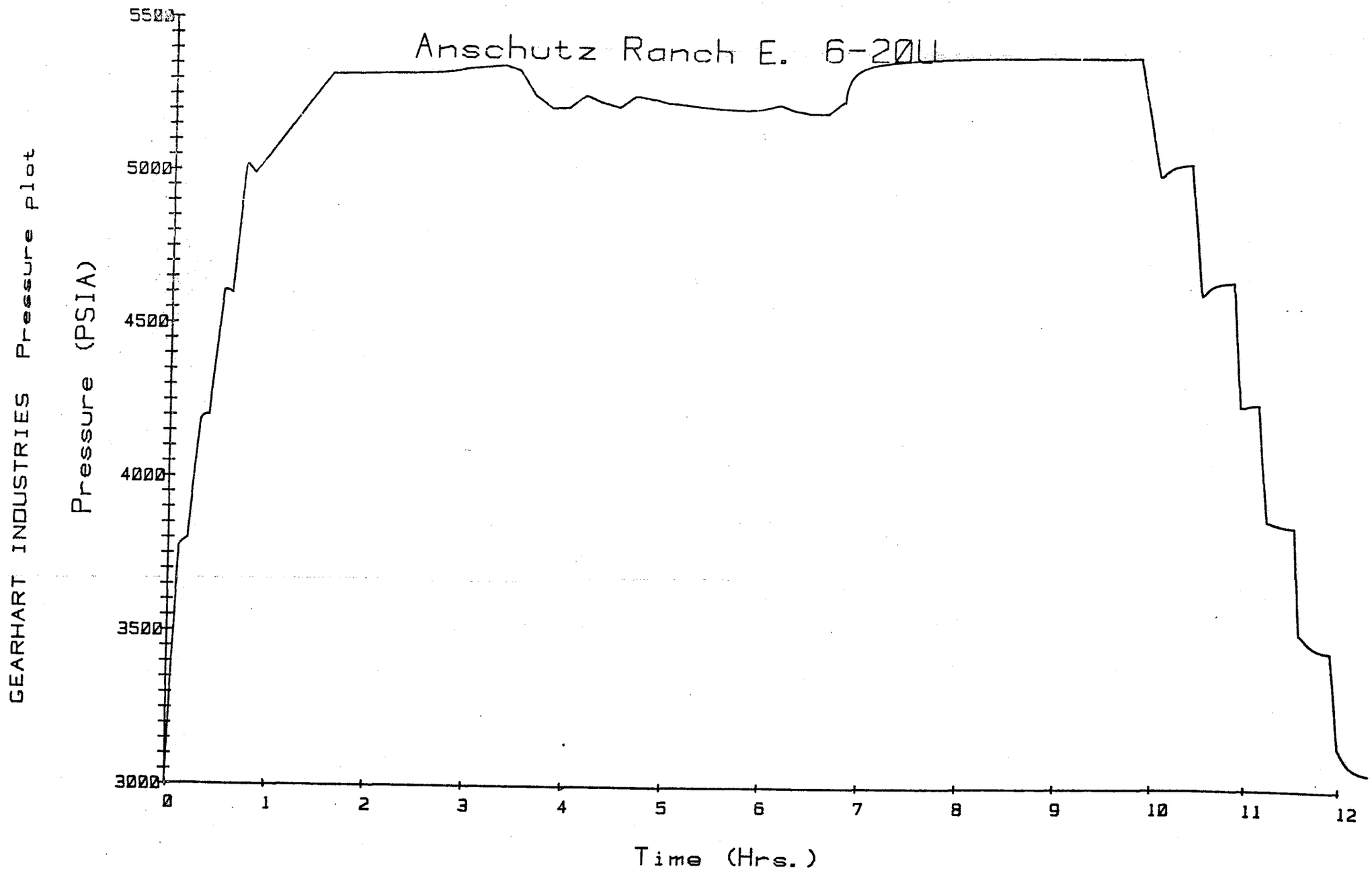
GEARHART INDUSTRIES Pressure plot
Anschutz Ranch E. 6-20U
Pressure (PSIA)
5500
5000
4500
4000
3500
3000
0
1
2
3
4
5
6
7
8
9
10
11
12
Time (Hrs.)

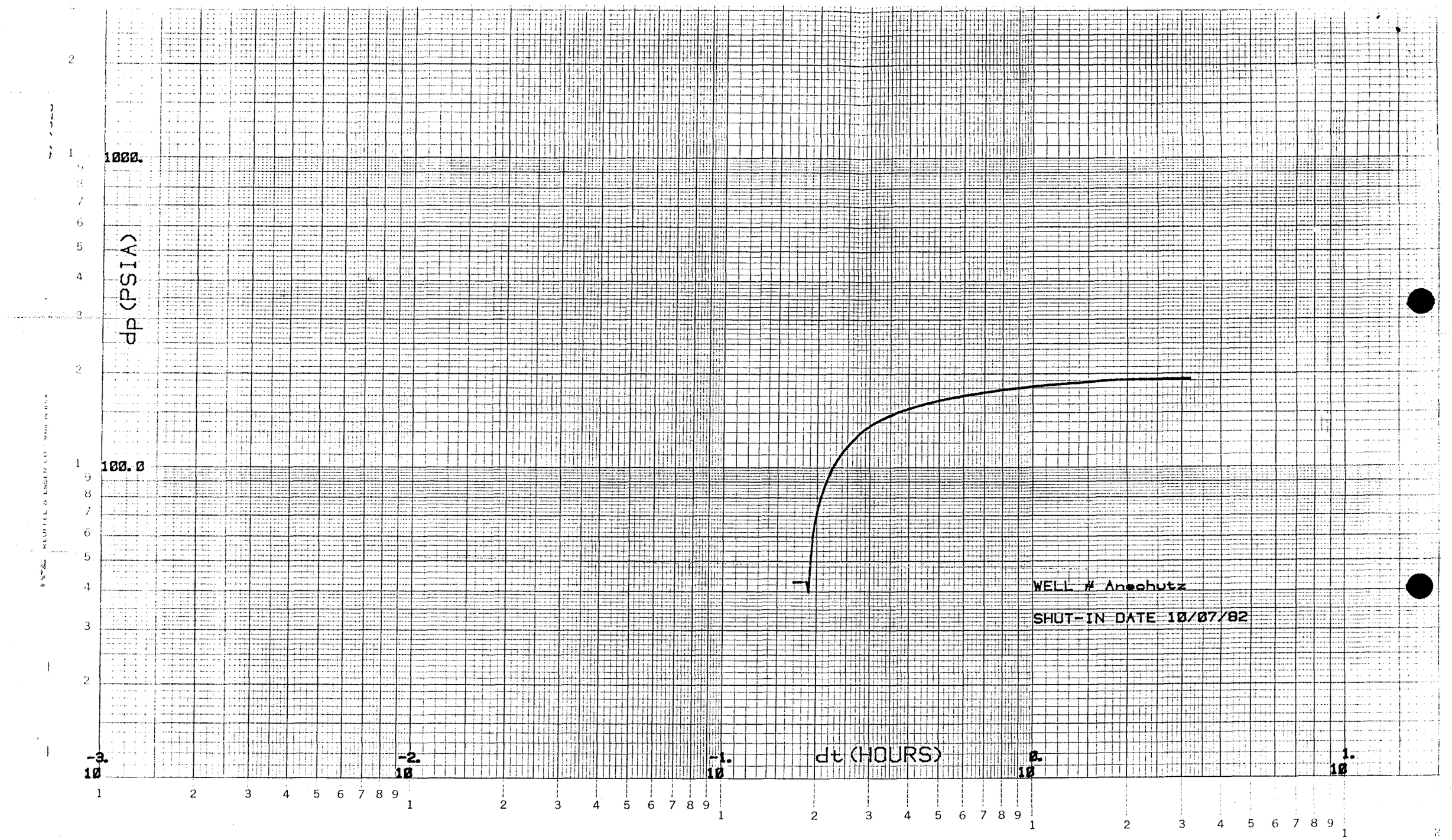
dP (PSIA)
1000.
100.0
dt (HOURS)
-3.
10
-2.
10
-1.
10
0.
10
1.
10
WELL # Anschutz
SHUT-IN DATE 10/07/82

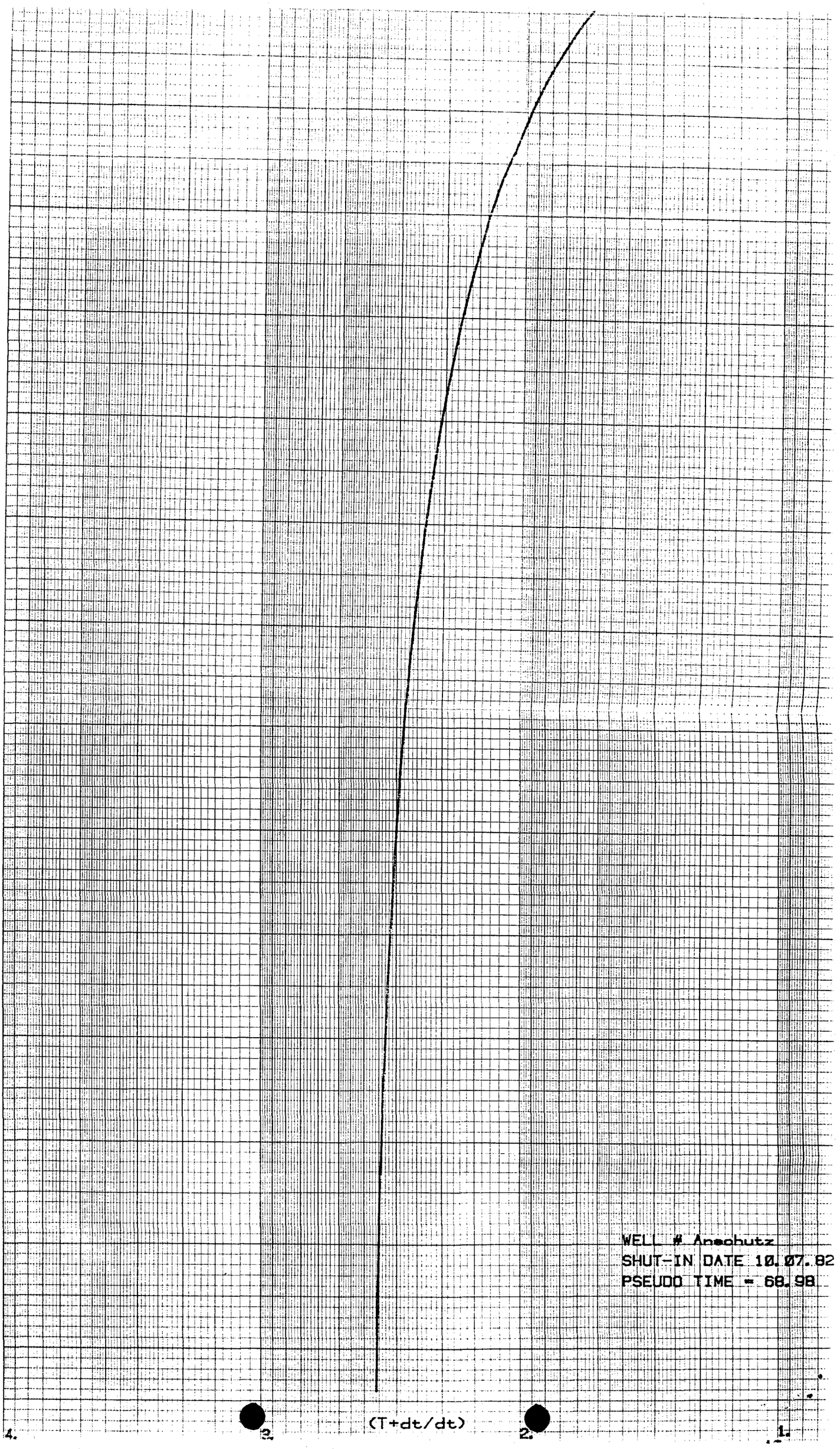
WELL # Ansohutz
SHUT-IN DATE 10.07.82
PSEUDO TIME = 68.98
(T+dt/dt)
4.
3.
2.
1.

HEWLETT PACKARD PRESSURE DATA

WELL DATA

Date: 10/20/82 - 10/23/82
Company: Anschutz Corporation
Well: Anschutz 6-20-U
Field: Anschutz Ranch East
County: Summit
State: Utah
Location: NW NW S20 - T4N - R8E
Engineer: Stephen Feingold
Witness: Ted Heidrich

TOOL DATA

Gauge No.: 1413A-0550
Calibration Date: 6/30/81
Panel No.: 012

		TIME	PRESSURE	TEMPERATURE °F
Date:	10/20/82	16:15	5238.64	214.1
Depth:	12,905'	16:16	5235.25	214.5
	WELL SHUT IN	16:17	5232.34	214.6
		16:18	5229.47	214.6
		16:19	5227.55	214.6
		16:20	5225.88	214.6
		16:21	5224.45	214.7
		16:22	5223.17	214.7
		16:23	5222.08	214.6
		16:24	5221.14	214.7
		16:25	5220.41	214.8
		16:26	5219.73	214.7
		16:27	5219.21	214.7
		16:28	5218.75	214.7
		16:29	5218.36	214.7
		16:30	5218.02	214.7
		16:31	5217.75	214.7
		16:32	5217.53	214.7
		16:33	5217.36	214.8
		16:34	5217.16	214.7
		16:35	5217.03	214.7
		16:36	5216.91	214.7
		16:37	5216.81	214.7
		16:38	5216.73	214.8
		16:39	5216.67	214.8
		16:40	5216.60	214.8
		16:41	5216.51	214.7
		16:42	5216.51	214.8
		16:43	5216.45	214.7
		16:44	5216.43	214.8
		16:45	5216.40	214.8
		16:46	5216.37	214.8
		16:47	5216.34	214.8
		16:48	5216.29	214.7
		16:49	5216.30	214.8

	TIME	PRESSURE	TEMPERATURE °F
Date: 10/20/82	16:50	5216.28	214.8
Depth: 12,905'	16:51	5216.28	214.8
	16:52	5216.26	214.8
	16:53	5216.24	214.8
	16:54	5216.21	214.7
	16:55	5216.19	214.7
	16:56	5216.16	214.7
	16:57	5216.16	214.8
	16:58	5216.15	214.8
	16:59	5216.15	214.8
	17:00	5216.12	214.7
	17:01	5216.14	214.7
	17:02	5216.12	214.7
	17:03	5216.12	214.7
	17:04	5216.11	214.8
	17:05	5216.12	214.8
	17:06	5216.11	214.7
WELL FLOWING	17:07	5186.58	215.1
	17:08	5199.67	215.4
	17:09	5202.55	215.4
	17:10	5201.64	215.5
	17:11	5195.71	215.6
	17:12	5187.42	215.7
	17:13	5152.84	215.8
	17:14	5103.71	215.9
	17:15	5037.98	215.9
	17:16	4998.75	216.1
	17:17	4972.31	216.3
	17:18	5018.43	216.6
	17:19	5047.33	216.8
	17:20	5062.62	216.9
	17:21	5071.47	217.0
	17:22	5077.00	217.1
	17:23	5088.45	217.2
	17:24	5082.49	217.1

		TIME	PRESSURE	TEMPERATURE °F
Date:	10/20/82	17:25	5051.53	217.1
Depth:	12,905'	17:26	5000.55	217.0
		17:27	4966.38	217.0
		17:28	4921.92	217.0
		17:29	4875.24	217.1
		17:30	4841.72	217.1
		17:31	4823.87	217.3
		17:32	4807.82	217.3
		17:33	4794.34	217.5
		17:34	4781.49	217.6
		17:35	4754.56	217.6
		17:36	4726.34	217.6
		17:37	4705.19	217.7
		17:38	4688.51	217.7
		17:39	4671.95	217.8
		17:40	4645.88	217.9
		17:41	4645.88	217.9
		17:42	4634.73	218.0
		17:43	4623.55	218.1
		17:44	4612.79	218.0
		17:45	4602.54	218.1
		17:46	4591.56	218.1
		17:47	4584.44	218.1
		17:48	4576.02	218.2
		17:49	4566.74	218.2
		17:50	4557.95	218.3
		17:51	4547.98	218.3
		17:52	4539.73	218.3
		17:53	4532.64	218.3
		17:54	4525.97	218.4
		17:55	4519.44	218.4
		17:56	4513.19	218.4
		17:57	4507.10	218.4
		17:58	4500.71	218.5
		17:59	4495.00	218.5

Date: 10/20/82

Depth: 12,905'

TIME	PRESSURE	TEMPERATURE °F
18:00	4489.31	218.5
18:10	4449.79	218.7
18:20	4406.96	218.8
18:30	4368.17	218.8
18:40	4355.26	219.0
18:50	4353.80	219.0
19:00	4338.78	219.1
19:10	4321.67	219.0
19:20	4316.05	219.3
19:30	4313.57	219.3
19:40	4313.51	219.3
19:50	4315.85	219.5
20:00	4325.22	219.5
20:10	4329.52	219.5
20:20	4333.35	219.5
20:30	4334.62	219.5
20:40	4335.62	219.6
20:50	4340.19	219.7
21:00	4339.35	219.7
21:10	4342.34	219.7
21:20	4339.97	219.7
21:30	4338.03	219.8
21:40	4337.79	219.8
21:50	4337.10	219.8
22:00	4337.82	219.8
22:10	4341.97	219.9
22:20	4344.33	219.9
22:30	4345.85	219.9
22:40	4348.69	219.9
22:50	4352.23	219.9
23:00	4354.37	220.0
23:10	4358.69	220.0
23:20	4362.13	220.0
23:30	4363.32	220.0
23:40	4364.41	220.0

	TIME	PRESSURE	TEMPERATURE °F
Date: 10/20/82	23:50	4365.26	220.1
Depth: 12,905'			
Date: 10/21/82	00:00	4366.60	220.0
Depth: 12,905'	00:30	4372.76	220.1
	01:00	4382.35	220.2
	01:30	4391.05	220.3
	02:00	4396.00	220.3
	02:30	4404.18	220.4
	03:00	4411.51	220.4
	03:30	4419.50	220.4
	04:00	4423.15	220.5
	04:30	4428.64	220.5
	05:00	4435.48	220.6
	05:30	4441.92	220.7
	06:00	4446.03	220.7
	06:30	4452.30	220.7
	07:00	4457.60	220.8
	07:30	4460.91	220.9
	08:00	4467.39	220.7
	08:30	4473.15	220.9
Choke: Was blocking	09:00	4475.71	220.9
off, had to shake	09:30	4419.92	220.8
choke.	10:00	4391.22	220.8
	10:30	4388.63	220.8
	11:00	4391.78	221.0
	11:30	4394.84	220.9
	12:00	4398.18	221.0
	12:30	4405.48	221.1
	13:00	4411.02	221.1
	13:30	4414.11	221.1
	14:00	4422.91	221.1
Choke: Was blocking	14:30	4427.25	221.2
off, had to shake	15:00	4431.57	221.2
choke.	15:30	4435.68	221.2
	16:00	4440.13	221.3

		TIME	PRESSURE	TEMPERATURE °F
Date:	10/21/82	16:30	4443.73	221.3
Depth:	12,905'	17:00	4447.34	221.3
		17:30	4450.79	221.3
		18:00	4454.82	221.4
		18:30	4458.58	221.4
		19:00	4461.96	221.4
		19:30	4464.74	221.4
		20:00	4468.20	221.4
		20:30	4471.74	221.5
		21:00	4474.61	221.5
		21:30	4477.82	221.5
		22:00	4480.92	221.6
		22:30	4483.55	221.6
		23:00	4486.46	221.6
		23:30	4487.80	221.6
Date:	10/22/82	00:00	4489.99	221.7
Depth:	12,905'	00:30	4492.69	221.7
		01:00	4495.10	221.7
		01:30	4498.86	221.7
		02:00	4500.75	221.7
		02:30	4502.34	221.7
		03:00	4505.16	221.8
		03:30	4507.82	221.8
		04:00	4510.78	221.8
		04:30	4512.57	221.9
		05:00	4513.76	221.8
		05:30	4516.91	221.9
		06:00	4519.52	221.9
		06:30	4521.77	221.9
		07:00	4524.14	221.9
		07:30	4526.01	221.9
		08:00	4528.49	222.0
		08:30	4531.03	222.0
		09:00	4533.17	222.0

Date: 10/22/82

Depth: 12,905'

TIME	PRESSURE	TEMPERATURE °F
09:30	4535.46	222.0
10:00	4537.00	222.1
10:30	4538.89	222.0
11:00	4541.02	222.1
11:30	4542.81	222.1
12:00	4544.71	222.1
12:30	4545.78	222.1
13:00	4548.70	222.2
13:30	4550.54	222.1
14:00	4552.52	222.2
14:30	4555.00	222.2
15:00	4552.97	222.2
15:30	4553.93	222.2
16:00	4558.63	222.2
16:30	4559.70	222.2
17:00	4561.75	222.3
17:00:10	4573.61	222.3
17:00:20	4603.07	222.4
17:00:30	4629.39	222.5
17:00:40	4655.44	22. 6
17:00:50	4679.18	222.7
17:01:00	4700.94	222.7
17:01:10	4721.43	222.9
17:01:20	4740.55	222.9
17:01:30	4758.26	222.9
17:01:40	4774.85	223.0
17:01:50	4790.34	223.1
17:02:00	4804.65	223.1
17:02:10	4818.25	223.2
17:02:20	4830.95	223.2
17:02:30	4843.05	223.3
17:02:40	4854.36	223.3
17:02:50	4865.05	223.3
17:03:00	4875.13	223.4
17:03:10	4884.69	223.4

Date: 10/22/82

Depth: 12,905'

TIME	PRESSURE	TEMPERATURE °F
17:03:20	4893.75	223.4
17:03:30	4902.36	223.4
17:03:40	4910.52	223.4
17:03:50	4918.29	223.4
17:04:00	4925.69	223.5
17:04:10	4932.68	223.5
17:04:20	4939.34	223.5
17:04:30	4945.73	223.5
17:04:40	4951.79	223.4
17:04:50	4957.66	223.5
17:05:00	4963.23	223.5
17:05:10	4968.58	223.5
17:05:20	4973.69	223.4
17:05:30	4978.61	223.5
17:05:40	4983.20	223.4
17:05:50	4987.61	223.4
17:06:00	4991.88	223.4
17:06:10	4995.95	223.4
17:06:20	4999.94	223.4
17:06:30	5003.74	223.4
17:06:40	5007.43	223.4
17:06:50	5011.05	223.4
17:07:00	5014.47	223.3
17:07:10	5017.79	223.3
17:07:20	5021.00	223.3
17:07:30	5024.12	223.3
17:07:40	5027.06	223.2
17:07:50	5029.97	223.3
17:08:00	5032.71	223.3
17:08:10	5035.39	223.3
17:08:20	5037.91	223.2
17:08:30	5040.40	223.2
17:08:40	5042.82	223.3
17:08:50	5045.13	223.2

		TIME	PRESSURE	TEMPERATURE °F
Date:	10/22/82	17:09:00	5047.34	223.2
Depth:	12,905'	17:09:10	5049.34	223.2
		17:09:20	5051.66	223.2
		17:09:30	5053.68	223.2
		17:09:40	5055.61	223.2
		17:09:50	5057.54	223.1
		17:10:00	5059.43	223.2
		17:10:30	5064.77	223.1
		17:11:00	5069.36	223.1
		17:11:30	5073.69	223.1
		17:12:00	5077.50	223.1
		17:12:30	5081.08	223.1
		17:13:00	5084.42	223.0
		17:13:30	5087.60	223.1
		17:14:00	5090.59	223.0
		17:14:30	5093.32	222.9
		17:15:00	5096.32	222.9
		17:15:30	5098.45	222.9
		17:16:00	5100.87	222.9
		17:16:30	5103.16	222.9
		17:17:00	5105.23	222.8
		17:17:30	5107.30	222.8
		17:18:00	5109.26	222.8
		17:18:30	5111.16	222.8
		17:19:00	5112.85	222.7
		17:19:30	5114.56	222.7
		17:20:00	5116.24	222.8
		17:20:30	5117.75	222.7
		17:21:00	5119.25	222.7
		17:21:30	5120.72	222.7
		17:22:00	5122.10	222.6
		17:22:30	5123.47	222.6
		17:23:00	5124.78	222.6
		17:23:30	5126.01	222.5

Date: 10/22/82

Depth: 12,905'

TIME	PRESSURE	TEMPERATURE °F
17:24:00	5127.29	222.6
17:24:30	5128.52	222.6
17:25:00	5129.64	222.5
17:25:30	5130.76	222.6
17:26:00	5131.83	222.5
17:26:30	5132.86	222.5
17:27:00	5133.89	222.5
17:27:30	5134.85	222.5
17:28:00	5135.80	222.4
17:28:30	5136.74	222.5
17:29:00	5137.60	222.4
17:29:30	5138.48	222.4
17:30:00	5139.31	222.3
17:31:00	5140.92	222.3
17:32:00	5142.44	222.3
17:33:00	5143.92	222.2
17:34:00	5145.35	222.3
17:35:00	5146.69	222.3
17:36:00	5147.95	222.2
17:37:00	5149.20	222.2
17:38:00	5150.33	222.1
17:39:00	5151.54	222.1
17:40:00	5152.56	222.1
17:41:00	5153.63	222.1
17:42:00	5154.64	222.0
17:43:00	5155.58	222.0
17:44:00	5156.56	222.0
17:45:00	5157.46	222.0
17:46:00	5158.29	221.9
17:47:00	5159.20	221.9
17:48:00	5159.99	221.9
17:49:00	5160.80	221.9
17:50:00	5161.59	221.9
17:51:00	5162.31	221.8

		TIME	PRESSURE	TEMPERATURE °F
Date:	10/22/82	17:52:00	5163.00	221.9
Depth:	12,905'	17:53:00	5163.70	221.8
		17:54:00	5164.37	221.8
		17:55:00	5164.98	221.7
		17:56:00	5165.62	221.7
		17:57:00	5166.25	221.7
		17:58:00	5166.87	221.7
		17:59:00	5167.46	221.7
		18:00:00	5168.00	221.7
		18:10	5172.94	221.6
		18:20	5176.78	221.3
		18:30	5179.98	221.2
		18:40	5182.63	221.1
		18:50	5184.88	221.0
		19:00	5186.77	220.8
		19:10	5188.45	220.8
		19:20	5189.88	220.7
		19:30	5191.18	220.6
		19:40	5192.26	220.5
		19:50	5193.21	220.4
		20:00	5194.14	220.4
		20:10	5195.02	220.3
		20:20	5196.97	220.3
		20:30	5198.87	220.3
		20:40	5199.51	220.2
		20:50	5200.60	220.2
		21:00	5201.98	220.1
		21:30	5203.96	219.7
		22:00	5204.74	219.6
		22:30	5205.39	219.6
Date:	10/23/82	00:00	5205.96	219.5
Depth:	12,905'	00:30	5206.44	219.4
		01:00	5206.89	219.3
		01:30	5207.28	219.2

		TIME	PRESSURE	TEMPERATURE °F
Date:	10/23/82	02:00	5207.63	219.2
Depth:	12,905'	02:30	5207.96	219.2
		03:00	5208.24	219.2
		03:30	5208.46	219.0
		04:00	5208.65	218.9
		04:30	5208.85	218.9
		05:00	5209.04	218.9
		05:30	5209.20	218.8
		06:00	5209.32	218.7
		06:30	5209.46	218.7
		07:00	5209.62	218.8
		07:30	5209.71	218.7
		08:00	5209.83	218.7
		08:30	5209.85	218.6
		09:00	5210.07	218.6
		10:00	5210.34	218.5
		11:00	5210.52	218.6
		12:00	5210.73	218.5
Date:	10/23/82	12:09	5009.26	207.2
Depth:	12,000'	12:10	5011.10	207.2
		12:11	5014.72	207.2
		12:12	5018.51	207.1
		12:13	5021.95	207.0
		12:14	5024.95	207.0
		12:15	5027.48	206.9
		12:16	5029.61	206.9
		12:17	5031.41	207.0
		12:18	5032.87	206.9
		12:19	5034.07	206.9
		12:20	5035.07	206.9
		12:21	5035.89	206.9
		12:22	5036.58	206.9
		12:23	5037.12	206.8
		12:24	5037.58	206.8

		TIME	PRESSURE	TEMPERATURE °F
Date:	10/23/82	12:25	5037.98	206.9
Depth:	12,000'	12:26	5038.26	206.8
		12:27	5038.53	206.8
		12:28	5038.74	206.8
		12:29	5038.93	206.9
		12:30	5039.08	206.9
		12:31	5039.17	206.8
		12:32	5039.26	206.8
		12:33	5039.35	206.8
		12:34	5039.40	206.8
		12:35	5039.46	206.8
		12:36	5039.50	206.8
		12:37	5039.55	206.8
		12:38	5039.58	206.8
		12:39	5039.60	206.7
Date:	10/23/82	12:49	4607.60	184.1
Depth:	10,000'	12:50	4610.77	184.1
		12:51	4615.00	184.1
		12:52	4618.89	184.1
		12:53	4622.19	184.1
		12:54	4624.94	184.0
		12:55	4627.17	184.0
		12:56	4629.00	184.1
		12:57	4630.46	184.1
		12:58	4631.66	184.1
		12:59	4632.63	184.0
		13:00	4633.41	184.0
		13:01	4634.04	184.0
		13:02	4634.55	183.9
		13:03	4634.99	184.0
		13:04	4635.02	183.9
		13:05	4635.59	183.9
		13:06	4635.82	184.0
		13:07	4636.00	184.0

		TIME	PRESSURE	TEMPERATURE °F
Date:	10/23/82	13:08	4636.15	183.9
Depth:	10,000'	13:09	4636.25	183.9
		13:10	4636.36	184.0
		13:11	4636.44	184.0
		13:12	4636.48	183.9
		13:13	4636.53	183.9
		13:14	4636.58	184.0
		13:15	4636.58	183.9
		13:16	4636.60	183.9
		13:17	4636.63	183.9
		13:18	4636.64	183.9
Date:	10/23/82	13:28	4208.49	159.8
DEpth:	8,000'	13:29	4205.00	159.9
		13:30	4205.84	159.8
		13:31	4207.35	159.8
		13:32	4208.77	159.8
		13:33	4209.96	159.8
		13:34	4210.89	159.7
		13:35	4211.59	159.6
		13:36	4212.13	159.6
		13:37	4212.54	159.6
		13:38	4212,83	159.7
		13:39	4213.05	159.6
		13:40	4213.21	159.6
		13:41	4213.32	159.5
		13:42	4213.41	159.6
		13:43	4213.46	159.6
		13:44	4213.5	159.6
		13:45	4213.52	159.5
		13:46	4213.53	159.5
		13:47	4213.54	159.5
		13:48	4213.53	159.5
		13:49	4213.52	159.6

		TIME	PRESSURE	TEMPERATURE °F
Date:	10/23/82	13:50	4213.50	159.6
Depth:	8,000'	13:51	4213.48	159.5
		13:52	4213.44	159.5
		13:53	4213.44	159.5
		13:54	4213.39	159.5
		13:55	4213.37	159.5
		13:56	4213.33	159.6
		13:57	4213.31	159.5
Date:	10/23/82	14:06	3792.97	135.2
Depth:	6,000'	14:07	3789.58	135.2
		14:08	3787.55	135.3
		14:09	3785.76	135.2
		14:10	3784.10	135.2
		14:11	3782.57	135.2
		14:12	3781.20	135.2
		14:13	3779.93	135.2
		14:14	3778.82	135.2
		14:15	3777.83	135.2
		14:16	3776.97	135.2
		14:17	3776.27	135.2
		14:18	3775.54	135.2
		14:19	3775.12	135.1
		14:20	3774.65	135.1
		14:21	3774.25	135.1
		14:22	3773.91	135.1
		14:23	3773.62	135.1
		14:24	3773.37	135.1
		14:25	3773.14	135.1
		14:26	3772.94	135.1
		14:27	3772.78	135.1
		14:28	3772.62	135.1
		14:29	3772.47	135.1
		14:30	3772.35	135.0

		TIME	PRESSURE	TEMPERATURE ° F
Date:	10/23/82	14:31	3772.24	135.0
Depth:	6,000'	14:32	3772.12	135.1
		14:33	3772.02	135.0
		14:34	3771.94	135.1
		14:35	3771.88	135.0
Date:	10/23/82	14:46	3397.35	108.6
Depth:	4,000'	14:47	3392.45	108.7
		14:48	3387.68	108.7
		14:49	3383.18	108.6
		14:50	3378.91	108.6
		14:51	3375.02	108.5
		14:52	3371.52	108.4
		14:53	3368.46	108.3
		14:54	3365.80	108.3
		14:55	3363.52	108.2
		14:56	3361.57	108.2
		14:57	3351.93	108.2
		14:58	3358.50	108.1
		14:59	3357.32	108.1
		15:00	3356.31	108.0
		15:01	3355.43	108.1
		15:02	3354.70	108.0
		15:03	3354.07	108.0
		15:04	3353.53	108.0
		15:05	3353.10	107.9
		15:06	3352.69	108.0
		15:07	3352.37	107.9
		15:08	3352.09	107.9
		15:09	3351.85	107.9
		15:10	3351.64	107.9
		15:11	3351.46	107.9
		15:12	3351.30	107.9
		15:13	3351.17	107.9

		TIME	PRESSURE	TEMPERATURE ° F
Date:	10/23/82	15:14	3351.07	107.8
Depth:	4,000'	15:15	3350.97	107.8
Date:	10/23/82	15:27	3111.64	86.6
Depth:	2,000'	15:28	3104.70	86.7
		15:29	3098.73	86.8
		15:30	3093.71	86.8
		15:31	3089.47	86.7
		15:32	3085.90	86.7
		15:33	3082.87	86.7
		15:34	3080.35	86.7
		15:35	3078.22	86.7
		15:36	3076.43	86.7
		15:37	3074.93	86.7
		15:38	3073.67	86.7
		15:39	3072.60	86.7
		15:40	3071.70	86.7
		15:41	3070.94	86.7
		15:42	3070.29	86.7
		15:43	3069.76	86.7
		15:44	3069.30	86.7
		15:45	3068.91	86.7
		15:46	3068.58	86.7
		15:47	3068.29	86.7
		15:48	3068.05	86.7
		15:49	3067.83	86.7
		15:50	3067.66	86.7
		15:51	3067.48	86.7
		15:52	3067.35	86.7
		15:53	3067.23	86.6
		15:54	3067.13	86.7
		15:55	3067.04	86.7
		15:56	3066.95	86.7

		TIME	PRESSURE	TEMPERATURE °F
Date:	10/23/82	16:10	2850.03	68.9
Depth:	100'	16:11	2844.42	68.9
		16:12	2839.56	68.9
		16:13	2835.47	68.9
		16:14	2832.05	68.9
		16:15	2829.18	68.9
		16:16	2826.76	68.9
		16:17	2824.74	68.9
		16:18	2823.06	68.9
		16:19	2821.65	68.9
		16:20	2820.46	68.9
		16:21	2819.45	68.9
		16:22	2818.62	68.9
		16:23	2817.91	68.9
		16:24	2817.31	68.9
		16:25	2816.83	68.8
		16:26	2816.41	68.8
		16:27	2816.04	68.8
		16:28	2815.72	68.8
		16:29	2815.45	68.8
		16:30	2815.22	68.8
		16:31	2815.01	68.6
		16:32	2814.82	68.7
		16:33	2814.68	68.7
		16:34	2814.60	68.7
		16:35	2814.53	68.7
		16:36	2814.40	68.7
		16:37	2814.28	68.7
		16:38	2814.15	68.7
		16:39	2814.05	68.7

Form OGC-1b

STATE OF UTAH
DEPARTMENT OF NATURAL RESOURCES
DIVISION OF OIL, GAS, AND MINING

SUBMIT IN TRIPLICATE*
(Other instructions on reverse side)

SUNDRY NOTICES AND REPORTS ON WELLS

(Do not use this form for proposals to drill or to deepen or plug back to a different reservoir. Use "APPLICATION FOR PERMIT—" for such proposals.)

1. OIL WELL [X] GAS WELL [ ] OTHER

2. NAME OF OPERATOR: The Anschutz Corp.

3. ADDRESS OF OPERATOR: 555 17th St., Suite 2400, Denver, CO 80202

4. LOCATION OF WELL (Report location clearly and in accordance with any State requirements.* See also space 17 below.) At surface: 936 FWL, 1291 FNL

5. LEASE DESIGNATION AND SERIAL NO.: FEE

6. IF INDIAN, ALLOTTEE OR TRIBE NAME:

7. UNIT AGREEMENT NAME:

8. FARM OR LEASE NAME: Anschutz Ranch East

9. WELL NO.: 6-20U

10. FIELD AND POOL, OR WILDCAT: Anschutz Ranch East

11. SEC., T., R., M., OR BLK. AND SURVEY OR AREA: Sec 20 T4N R8E

14. PERMIT NO.:

15. ELEVATIONS (Show whether DF, RT, GR, etc.): 7350' KB

12. COUNTY OR PARISH: Summit

13. STATE: Utah

16. **Check Appropriate Box To Indicate Nature of Notice, Report, or Other Data**

NOTICE OF INTENTION TO:				SUBSEQUENT REPORT OF:			
TEST WATER SHUT-OFF		PULL OR ALTER CASING		WATER SHUT-OFF		REPAIRING WELL	
FRACTURE TREAT		MULTIPLE COMPLETE		FRACTURE TREATMENT		ALTERING CASING	
SHOOT OR ACIDIZE		ABANDON*		SHOOTING OR ACIDIZING	X	ABANDONMENT*	
REPAIR WELL		CHANGE PLANS		(Other)			
(Other)				(NOTE: Report results of multiple completion on Well Completion or Recompletion Report and Log form.)			

17. DESCRIBE PROPOSED OR COMPLETED OPERATIONS (Clearly state all pertinent details, and give pertinent dates, including estimated date of starting any proposed work. If well is directionally drilled, give subsurface locations and measured and true vertical depths for all markers and zones pertinent to this work.) *

This well has been completed as per the sundry notice for this well dated 9/17/82. The initial produciton rate for this well from the gross interval 13248-13860' has been calculated to be 5997 MCFD, 1128 BOPD. FTP = 2200 psi, 26/64" choke.

18. I hereby certify that the foregoing is true and correct

SIGNED David Hobbs TITLE Drilling Engineer DATE 1-17-83

(This space for Federal or State office use)

APPROVED BY _____ TITLE _____ DATE _____

CONDITIONS OF APPROVAL, IF ANY:

*See Instructions on Reverse Side

Amoco Production Company
Post Office Box 17675
Salt Lake City, Utah 84117
801-272-9253

T. G. Doss
District Superintendent

February 9, 1983

DIVISION OF
GAS & MINING

State of Utah
Division of Oil, Gas, and Mining
4241 State Office Building
Salt Lake City, Utah 84114

File: DSD-251-031.190

Anschutz Ranch East Unit Operations - Summit County, Utah

Amoco Production Company herewith advises that the following wells within the subject unit have been renamed as noted:

Old Well Name:	New Well Name/Location:
Anschutz U2-30	Anschutz Ranch East Unit W30-02 Sec. 30, T4N, R8E
Anschutz U6-20	Anschutz Ranch East Unit W20-06 Sec. 20, T4N, R8E
Anschutz U30-06	Anschutz Ranch East Unit W30-06 Sec. 30, T4N, R8E
Anschutz U8-20	Anschutz Ranch East Unit W20-08 Sec. 20, T4N, R8E
Anschutz U8-30	Anschutz Ranch East Unit W30-08 Sec. 30, T4N, R8E
Anschutz U10-20	Anschutz Ranch East Unit W20-10 Sec. 20, T4N, R8E
Anschutz U10-30	Anschutz Ranch East Unit W30-10 Sec. 30, T4N, R8E
Anschutz U12-20	Anschutz Ranch East Unit W20-12 Sec. 20, T4N, R8E

Old Well Name:	New Well Name/Location:
Anschutz U14-20	Anschutz Ranch East Unit W20-14 Sec. 20, T4N, R8E
Anschutz U14-30	Anschutz Ranch East Unit W30-14 Sec. 30, T4N, R8E
Anschutz U16-20	Anschutz Ranch East Unit W20-16 Sec. 20, T4N, R8E
Anschutz U16-30	Anschutz Ranch East Unit W30-16 Sec. 30, T4N, R8E
Bountiful Livestock #1	Anschutz Ranch East Unit W16-14 Sec. 16, T4N, R8E
Bountiful Livestock "A" #1	Anschutz Ranch East Unit W16-06 Sec. 16, T4N, R8E
Champlin 458 Amoco "D" #1	Anschutz Ranch East Unit W29-04 Sec. 29, T4N, R8E
Champlin 458 Amoco "D" #2	Anschutz Ranch East Unit W29-02 Sec. 29, T4N, R8E
Champlin 458 Amoco "D" #3	Anschutz Ranch East Unit W29-12 Sec. 29, T4N, R8E
✓Champlin 458 Amoco "D" #5	Anschutz Ranch East Unit W29-14 Sec. 29, T4N, R8E
Champlin 458 Amoco "D" #6	Anschutz Ranch East Unit W29-06 Sec. 29, T4N, R8E
Champlin 458 Amoco "E" #1	Anschutz Ranch East Unit W31-08 Sec. 31, T4N, R8E
Champlin 458 Amoco "E" #2	Anschutz Ranch East Unit W31-04 Sec. 31, T4N, R8E
✓Champlin 458 Amoco "E" #5	Anschutz Ranch East Unit W31-02 Sec. 31, T4N, R8E
Champlin 458 Amoco "E" #6	Anschutz Ranch East Unit W31-06 Sec. 31, T4N, R8E
Champlin 458 Amoco "F" #1	Anschutz Ranch East Unit W21-04 Sec. 21, T4N, R8E
Champlin 458 Amoco "F" #2	Anschutz Ranch East Unit E21-14 Sec. 21, T4N, R8E
Island Ranching "E" #2	Anschutz Ranch East Unit W36-08 Sec. 36, T3N, R7E
Thousand Peaks Ranches #1	Anschutz Ranch East Unit W32-04 Sec. 32, T4N, R8E

For your information the letter preceding the well number (W-E) refers to the West/East Nugget structure within the Anschutz Ranch East Unit. Should you have questions concerning the well name changes, please contact Scheree Wilcox at this office, 801-264-2200.

T.G. Doss

T.G. Doss
District Superintendent

SW/

cc: State of Wyoming
Oil and Gas Conservation Commission
P.O. Box 2640
Casper, Wyoming 82601

STATE OF UTAH
NATURAL RESOURCES & ENERGY
Oil, Gas & Mining

Scott M. Matheson, Governor
Temple A. Reynolds, Executive Director
Cleon B. Feight, Division Director

4241 State Office Building • Salt Lake City, UT 84114 • 801-533-5771

March 21, 1983

Anschutz Corporation
Att: Mark Buckland
2400 Anaconda Tower
555 17th Street
Denver, Colorado 80202

Re: Anschutz Ranch East Unit # W20-06
Sec. 20, T. 4N, R. 8E.
Summit County, Utah

Well No. AREU # W 20-16
Sec. 20, T. 4N,. R. 8E.
Summit County, Utah

Well No. AREU # W 30-16
Sec. 30, T. 4N, R. 8E.
Summit County, Utah

Gentlemen:

This letter is to advise you that the Well Completion or Recompletion Report and Log for the above mentioned wells are due and have not been filed with this office as required by our rules and regulations.

Please complete the enclosed Form OGC-3, in duplicate, and forward them to this office as soon as possible.

We will be happy to acknowledge receipt of response to this notice if you will include an extra copy of the transmittal letter with a place for our signature, and a self addressed envelope for the return. Such acknowledgement should avoid unnecessary mailing of a firm second notice from our agency.

Your prompt attention to the above will be greatly appreciated.

Respectfully,

DIVISION OF OIL, GAS AND MINING

Cari Furse

Cari Furse
Well Records Specialist

CF/cf
Enclosure

Board/Charles R. Henderson, Chairman • John L. Bell • E. Steele McIntyre • Edward T. Beck
Robert R. Norman • Margaret R. Bird • Herm Olsen

an equal opportunity employer • please recycle paper

Form OGCC-3

4

STATE OF UTAH

OIL & GAS CONSERVATION COMMISSION

SUBMIT IN DUPLICATE*
(See other instructions on reverse side)

WELL COMPLETION OR RECOMPLETION REPORT AND LOG*

1a. TYPE OF WELL: OIL WELL [X] GAS WELL [ ] DRY [ ] Other

b. TYPE OF COMPLETION: NEW WELL [ ] WORK OVER [X] DEEP-EN [ ] PLUG BACK [ ] DIFF. RESVR. [ ] Other

2. NAME OF OPERATOR: The Anschutz Corporation

3. ADDRESS OF OPERATOR: 555 17th St. Suite 2400, Denver, CO 80202

4. LOCATION OF WELL (*Report location clearly and in accordance with any State requirements*)*
At surface 936' FWL, 1291 FNL
At top prod. interval reported below 1913 FWL, 1987 BNL
At total depth 2090 FWL, 2172 FNL

5. LEASE DESIGNATION AND SERIAL NO.: FEE

6. IF INDIAN, ALLOTTEE OR TRIBE NAME:

7. UNIT AGREEMENT NAME:

8. FARM OR LEASE NAME: Anschutz Ranch East

9. WELL NO.: 6-20U

10. FIELD AND POOL, OR WILDCAT: Anschutz Ranch East

11. SEC., T., R., M., OR BLOCK AND SURVEY OR AREA: Sec 20 4N-8E

14. PERMIT NO.: 43-043-30159 DATE ISSUED:

12. COUNTY OR PARISH: Summit

13. STATE: Utah

15. DATE SPUDDED	16. DATE T.D. REACHED	17. DATE COMPL. (*Ready to prod.*)	18. ELEVATIONS (DF, RKB, RT, GR, ETC.)*	19. ELEV. CASINGHEAD
5/19/81	12/30/81	2/15/82	KB 7559 GL 7534	7534

20. TOTAL DEPTH, MD & TVD	21. PLUG, BACK T.D., MD & TVD	22. IF MULTIPLE COMPL., HOW MANY*	23. INTERVALS DRILLED BY	ROTARY TOOLS	CABLE TOOLS
14163 MC	14051 MD		→	0-TD	

24. PRODUCING INTERVAL(S), OF THIS COMPLETION—TOP, BOTTOM, NAME (MD AND TVD)*
13248-268, 13292-346, 13370-392, 13418-446, 13470-490, 13556-580, 13680-692, 13699-708, 13716-726, 13736-746, 13772-800, 13830-860

25. WAS DIRECTIONAL SURVEY MADE: Yes

26. TYPE ELECTRIC AND OTHER LOGS RUN
GR, CNL, FDC, BHCS, DIL, DLL, NGRS, TDT, VDL, HDT, FK

27. WAS WELL CORED: Yes

28. CASING RECORD (*Report all strings set in well*)

CASING SIZE	WEIGHT, LB./FT.	DEPTH SET (MD)	HOLE SIZE	CEMENTING RECORD	AMOUNT PULLED
13 3/8	61-72	5411	17 1/2	1510 Sx	
9 5/8	43.5-62.8	11330	12 1/4	950 Sx	
7	26-32	10048	8 3/4	450 Sx	
6 5/8	27	11048-14163	8 3/4		

29. LINER RECORD

SIZE	TOP (MD)	BOTTOM (MD)	SACKS CEMENT*	SCREEN (MD)

30. TUBING RECORD

SIZE	DEPTH SET (MD)	PACKER SET (MD)
2 7/8	12916	12916

31. PERFORATION RECORD (*Interval, size and number*)
(See 24 above)

32. ACID, SHOT, FRACTURE, CEMENT SQUEEZE, ETC.

DEPTH INTERVAL (MD)	AMOUNT AND KIND OF MATERIAL USED
13772-860	2000 Gal 7 1/2% HCL
13514-860	20,000 Gal 7 1/2% HCL

33.* PRODUCTION

DATE FIRST PRODUCTION: 2/15/82
PRODUCTION METHOD (*Flowing, gas lift, pumping—size and type of pump*): Flowing
WELL STATUS (*Producing or shut-in*): Producing

DATE OF TEST	HOURS TESTED	CHOKE SIZE	PROD'N. FOR TEST PERIOD	OIL—BBL.	GAS—MCF.	WATER—BBL.	GAS-OIL RATIO
10/22/82	48	26/64	→	2256	11994	Tr	5316

FLOW. TUBING PRESS.	CASING PRESSURE	CALCULATED 24-HOUR RATE	OIL—BBL.	GAS—MCF.	WATER—BBL.	OIL GRAVITY-API (CORR.)
2200		→	1128	5997	Tr	

34. DISPOSITION OF GAS (*Sold, used for fuel, vented, etc.*): Sold

TEST WITNESSED BY: T. Heidrich

35. LIST OF ATTACHMENTS

36. I hereby certify that the foregoing and attached information is complete and correct as determined from all available records

SIGNED Mark L. Buckland TITLE Jr. Drilling Engineer DATE 3/30/83

*(See Instructions and Spaces for Additional Data on Reverse Side)

INSTRUCTIONS

General: This form is designed for submitting a complete and correct well completion report and log on all types of lands and leases to either a Federal agency or a State agency, or both, pursuant to applicable Federal and/or State laws and regulations. Any necessary special instructions concerning the use of this form and the number of copies to be submitted, particularly with regard to local, area, or regional procedures and practices, either are shown below or will be issued by, or may be obtained from, the local Federal and/or State office. See instructions on items 22 and 24, and 33, below regarding separate reports for separate completions.
If not filed prior to the time this summary record is submitted, copies of all currently available logs (drillers, geologists, sample and core analysis, all types electric, etc.), formation and pressure tests, and directional surveys, should be attached hereto, to the extent required by applicable Federal and/or State laws and regulations. All attachments should be listed on this form, see item 35.
Item 4: If there are no applicable State requirements, locations on Federal or Indian land should be described in accordance with Federal requirements. Consult local State or Federal office for specific instructions.
Item 18: Indicate which elevation is used as reference (where not otherwise shown) for depth measurements given in other spaces on this form and in any attachments.
Items 22 and 24: If this well is completed for separate production from more than one interval zone (multiple completion), so state in item 22, and in item 24 show the producing interval, or intervals, top(s), bottom(s) and name(s) (if any) for only the interval reported in item 33. Submit a separate report (page) on this form, adequately identified, for each additional interval to be separately produced, showing the additional data pertinent to such interval.
Item 29: *"Sacks Cement":* Attached supplemental records for this well should show the details of any multiple stage cementing and the location of the cementing tool.
Item 33: Submit a separate completion report on this form for each interval to be separately produced. (See instruction for items 22 and 24 above.)

37. SUMMARY OF POROUS ZONES:
SHOW ALL IMPORTANT ZONES OF POROSITY AND CONTENTS THEREOF; CORED INTERVALS; AND ALL DRILL-STEM TESTS, INCLUDING DEPTH INTERVAL TESTED, CUSHION USED, TIME TOOL OPEN, FLOWING AND SHUT-IN PRESSURES, AND RECOVERIES

FORMATION	TOP	BOTTOM	DESCRIPTION, CONTENTS, ETC.
Nugget	12995		oil and gas

38. GEOLOGIC MARKERS

NAME	TOP MEAS. DEPTH	TOP TRUE VERT. DEPTH
Aspen	5385	
Gannet	6950	
Pruess	9950	
Salt	10970	
Twin Creek	11180	
Nugget	12995	
Ankareh	14028	

Amoco Production Company
Post Office Box 829
Evanston, Wyoming 82930
307-789-1700

T. G. Doss
District Superintendent

RECEIVED
OCT 18 1983
DIVISION OF
OIL, GAS & MINING

October 14, 1983

Division of Oil, Gas and Mining
4241 State Office Building
Salt Lake City, UT 84114

Attn: Mary Alice Peterson

File: JEK-630-416

This letter is in response to a phone conversation on October 11, 1983, with Mary Alice Peterson, an employee of the Division of Oil, Gas, and Mining for the State of Utah. The wells listed below were formerly operated by the Anschutz Corporation and are now operated by Amoco Production Company as a part of the Anschutz Ranch East Unit. The wells are shown with their before unitization and after unitization names.

Before Unitization	After Unitization
Anschutz U2-30	Anschutz W30-02
Anschutz U6-20	Anschutz W20-06 4N 8E sec. 20
Anschutz U6-30	Anschutz W30-06
Anschutz U8-20	Anschutz W20-08
Anschutz U8-30	Anschutz W30-08
Anschutz U10-20	Anschutz W20-10
Anschutz U10-30	Anschutz W30-10
Anschutz U12-20	Anschutz W20-12
Anschutz U14-20	Anschutz W20-14
Anschutz U14-30	Anschutz W30-14
Anschutz U16-20	Anschutz W20-16
Anschutz U16-30	Anschutz W30-16

If there are any questions please contact John Sprague at 307-789-1700, extension 2118.

T. G. Doss

T. G. Doss

JCS/sh

Form OGC-1b

SUBMIT IN TRIPLICATE*
(Other instructions on reverse side)

STATE OF UTAH
DEPARTMENT OF NATURAL RESOURCES
DIVISION OF OIL, GAS, AND MINING

SUNDRY NOTICES AND REPORTS ON WELLS

(Do not use this form for proposals to drill or to deepen or plug back to a different reservoir. Use "APPLICATION FOR PERMIT—" for such proposals.)

1. OIL WELL ☐ GAS WELL ☒ OTHER

2. NAME OF OPERATOR: Amoco Production Company

3. ADDRESS OF OPERATOR: P.O. Box 829, Evanston, WY 82930

4. LOCATION OF WELL (Report location clearly and in accordance with any State requirements.* See also space 17 below.) At surface: 936' FWL 1291' FNL

5. LEASE DESIGNATION AND SERIAL NO.: FEE

6. IF INDIAN, ALLOTTEE OR TRIBE NAME:

7. UNIT AGREEMENT NAME:

8. FARM OR LEASE NAME: Anschutz Ranch East

9. WELL NO.: W20-06

10. FIELD AND POOL, OR WILDCAT: Anschutz Ranch East

11. SEC., T., R., M., OR BLK. AND SURVEY OR AREA: Sec. 20-T4N-R8E

14. PERMIT NO.: API #430433015900

15. ELEVATIONS (Show whether DF, RT, GR, etc.): 7534'

12. COUNTY OR PARISH: Summit

13. STATE: Utah

16. **Check Appropriate Box To Indicate Nature of Notice, Report, or Other Data**

NOTICE OF INTENTION TO:				SUBSEQUENT REPORT OF:			
TEST WATER SHUT-OFF	☐	PULL OR ALTER CASING	☐	WATER SHUT-OFF	☐	REPAIRING WELL	☐
FRACTURE TREAT	☐	MULTIPLE COMPLETE	☐	FRACTURE TREATMENT	☐	ALTERING CASING	☐
SHOOT OR ACIDIZE	☐	ABANDON*	☐	SHOOTING OR ACIDIZING	☐	ABANDONMENT*	☐
REPAIR WELL	☐	CHANGE PLANS	☐	(Other) Stimulation & Squeeze			☐
(Other)			☐	(NOTE: Report results of multiple completion on Well Completion or Recompletion Report and Log form.)			

17. DESCRIBE PROPOSED OR COMPLETED OPERATIONS (Clearly state all pertinent details, and give pertinent dates, including estimated date of starting any proposed work. If well is directionally drilled, give subsurface locations and measured and true vertical depths for all markers and zones pertinent to this work.)*

Stimulations: (1) 13680'-13860' 7600 gallons 7½% HCl acid. Completed 9-22-83.
(2) 13248'-13650' 16,000 7½ HCl acid complete 10-22-83.

Squeeze work 35 sxs Class H cement into perforations 13680'-13692' completed 10-4-83.

Currently flow testing.

Reason for work. Based on the nonuniform production profiles experienced in the Anschutz Ranch East Field, this well was selected to have extensive remedial work performed in an attempt at obtaining a more uniform profile.

RECEIVED
OCT 21 1983
DIV. OF OIL, GAS & MINING

18. I hereby certify that the foregoing is true and correct

SIGNED Lauryl L. Smith TITLE Staff Admin. Anaylist (SG) DATE 10/20/83

(This space for Federal or State office use)

APPROVED BY _____ TITLE _____ DATE _____
CONDITIONS OF APPROVAL, IF ANY:

*See Instructions on Reverse Side

Claudia:
Wells that we (Amoco) took over from Anschutz Corp.
George

RECEIVED
FEB 0 1984
DIVISION OF
OIL, GAS & MINING

ARCF FILE C

02/06/83

ANSCHUTZ RANCH EAST UNIT NEW NUMBERING SYSTEM

UTAH/WEST NUGGET

Our

OLD WELL NAME	NEW WELL NAME
ANSCHUTZ U06-20 ✓	ANSCHUTZ W20-06
ANSCHUTZ U06-30 ✓	ANSCHUTZ W30-06
ANSCHUTZ U08-20 ✓	ANSCHUTZ W20-08
ANSCHUTZ U08-30 ✓	ANSCHUTZ W30-08
ANSCHUTZ U14-20 ✓	ANSCHUTZ W20-14
ANSCHUTZ U14-30 ✓	ANSCHUTZ W30-14
ANSCHUTZ U16-20 ✓	ANSCHUTZ W20-16
ANSCHUTZ U16-30 ✓	ANSCHUTZ W30-16

WYOMING/EAST NUGGET

MORE... TIMESHAR

OLD WELL NAME	NEW WELL NAME
ANSCHUTZ U11-26	ANSCHUTZ E26-11
ANSCHUTZ U12-26	ANSCHUTZ E26-12

R; T=0.01/0.01 16:51:39

RUNNING TIMESHAR

Amoco Production Company

May 16, 1986

RECEIVED
MAY 21 1986
DIVISION OF
OIL, GAS & MINING

Utah Division of Oil, Gas & Mining
355 West North Temple
3 Triad Center, Suite 350
Salt Lake City, Utah 84180

Re: **Name change on wells being brought into the Anschutz Ranch East Unit**

Attn: Claudia Jones

Dear Claudia:

The following is a list of all wells, East & West Lobe (production and Injection) at Anschtuz Ranch East referenced by well name, API No. and legal description, that should be rolled over from Amoco Production Company to Amoco Rockmount Company upon completion and being brought into the Unit.

Production wells

Well Name	API No.	Legal Description
W01-04	43-043-30270	NWNW, Sec 1, T3N, R7E
W01-06	43-043-30188	SENW, Sec 1, T3N, R7E
W01-12	43-043-30271	NWSW, Sec 1, T3N, R7E
W20-04	43-043-30238	NWNW, Sec 20, T4N, R8E
W16-~~60~~ 06	43-043-30138	NENE, Sec 16, T4N, R8E
W16-12	43-043-30231	SWNW, Sec 16, T4N, R8E
W17-~~12~~ 16?	43-043-30176	NWSE, Sec 17, T4N, R8E
W19-16	43-043-95008 ? 30204	SWSE, Sec 19, T4N, R8E
W20-02	43-043-30228	NWNE, Sec 20, T4N, R8E
W20-06	43-043-30159	NWNW, Sec 20, T4N, R8E
W20-10	43-043-30229	SENW, Sec 20, T4N, R8E
W20-12	43-043-30220	NWSW, Sec 20, T4N, R8E
W20-16	43-043-30148	SWSE, Sec 20, T4N, R8E
W21-04	43-043-30135	NWNW, Sec 21, T4N, R8E
W29-04	43-043-30129	NWNW, Sec 29, T4N, R8E
W29-06A	43-043-30250	SENW, Sec 29, T4N, R8E
W29-14A	43-043-30251	NWSW, Sec 29, T4N, R8E
W30-06	43-043-30273	NESW, Sec 30, T4N, R8E
W30-08	43-043-30183	SENE, Sec 30, T4N, R8E
W30-10	43-043-30215	NWSE, Sec 30, T4N, R8E
W30-14	43-043-30185	SESW, Sec 30, T4N, R8E
W30-16	43-043-30156	NESE, SEc 30, T4N, R8E

Production wells (cont.)

Well Name	API NO.	Legal Description
W31-04	43-043-30165	NWNW, Sec 31, T4N, R8E
W31-06	43-043-30217	SENW, Sec 31, T4N, R8E
W31-08	43-043-30164	NWNE, Sec 31, T4N, R8E
W31-12	43-043-30190	SWNW, Sec 31, T4N, R8E
W32-04	43-043-30162	NWNW, Sec 32, T4N, R8E
W36-10	43-043-30227	NESW, Sec 36, T4N, R7E
W36-16	43-043-30157	SESE, Sec 36, T4N, R7E

Injection wells

W01-02	43-043-30209	? NWNE, Sec 1, T3N, R7E
W02-10	43-043-30265	NWSE, Sec 2, T3N, R7E
W16-14	43-043-30096	NWSW, Sec 16, T4N, R8E
W19-08	43-043-30272	SENE, Sec 19, T4N, R8E
W20-08	43-043-30212 ? 30123	SWNW, Sec 20, T4N, R8E
W20-14	43-043-30145	NWSW, Sec 20, T4N, R8E
W29-02	43-043-30220 ? 30136	NWNE, Sec 29, T4N, R8E
W29-12	43-043-30154	NWSW, Sec 29, T4N, R8E
W30-02	43-043-95014 ? 30218	NWNE, Sec 30, T4N, R8E
W30-12A	43-043-30248 ? 30230	NWSW, Sec 30, T4N, R8E
W30-15	43-043-95012 ? 30216	? NWNE, Sec 30, T4N, R8E
W36-08	43-043-30167	SENE, Sec 36, T4N, R7E
W36-14	43-043-30255	SESW. Sec 36, T4N, R7E

This should help to clarify your files and if any changes are necessary we will notify you of such.

If further information is needed please contact Louis F. Lozzie of this office at 307-789-1700 ext. 2226.

Thank you,

R. M. Ramsey

R. M. Ramsey
District Admn. Supervisor

/kg

cc: Pam Collier - Amoco Denver

Form OGC-1b

STATE OF UTAH
DEPARTMENT OF NATURAL RESOURCES
DIVISION OF OIL, GAS, AND MINING

SUBMIT IN TRIPLICATE*
(Other instructions on reverse side)

2

080416

SUNDRY NOTICES AND REPORTS ON WELLS

(Do not use this form for proposals to drill or to deepen or plug back to a different reservoir. Use "APPLICATION FOR PERMIT—" for such proposals.)

1. OIL WELL [ ] GAS WELL [X] OTHER

2. NAME OF OPERATOR: AMOCO PRODUCTION COMPANY

3. ADDRESS OF OPERATOR: P. O. BOX 829, EVANSTON, WYOMING 82930

4. LOCATION OF WELL (Report location clearly and in accordance with any State requirements.* See also space 17 below.) At surface: 936' FWL & 1291' FNL

5. LEASE DESIGNATION AND SERIAL NO.: Fee

6. IF INDIAN, ALLOTTEE OR TRIBE NAME:

7. UNIT AGREEMENT NAME: Anschtuz Ranch East

8. FARM OR LEASE NAME: W20-06

9. WELL NO.: W20-06

10. FIELD AND POOL, OR WILDCAT: Nugget

11. SEC., T., R., M., OR BLK. AND SURVEY OR AREA: Sec. 20, T4N, R8E

12. COUNTY OR PARISH: Summit

13. STATE: Utah

14. PERMIT NO.: 43-043-301590

15. ELEVATIONS (Show whether DF, RT, GR, etc.): 7559' KB 7534' GL

16. **Check Appropriate Box To Indicate Nature of Notice, Report, or Other Data**

NOTICE OF INTENTION TO:				SUBSEQUENT REPORT OF:			
TEST WATER SHUT-OFF	[ ]	PULL OR ALTER CASING	[ ]	WATER SHUT-OFF	[ ]	REPAIRING WELL	[ ]
FRACTURE TREAT	[ ]	MULTIPLE COMPLETE	[ ]	FRACTURE TREATMENT	[ ]	ALTERING CASING	[ ]
SHOOT OR ACIDIZE	[ ]	ABANDON*	[ ]	SHOOTING OR ACIDIZING	[ ]	ABANDONMENT*	[ ]
REPAIR WELL	[ ]	CHANGE PLANS	[ ]	(Other)			[ ]
(Other)			[X]				

(NOTE: Report results of multiple completion on Well Completion or Recompletion Report and Log form.)

17. DESCRIBE PROPOSED OR COMPLETED OPERATIONS (Clearly state all pertinent details, and give pertinent dates, including estimated date of starting any proposed work. If well is directionally drilled, give subsurface locations and measured and true vertical depths for all markers and zones pertinent to this work.)*

Upper Zone II perforations (13,248'-13,286' & 13,292'-13,346') will be cement squeezed with 100 sx Class "H" .
The cement will then be drilled out to the cast iron bridge plug (CBIP) set at 13,360'. Casing will be pressure-tested and then a cement bond log will be run. The CIBP will then be drilled out and the well will be placed on production to test remaining Zone 2 and 3 perforated intervals. Work will begin 7-25-86 and should be complete in seven (7) days.

Confirmed per telecon between Bruce Leggett (Amoco) and John Baza (UtO&G) on 7-25-86 @ 8:20 a.m.

RECEIVED
JUL 31 1986
DIVISION OF OIL
GAS & MINING

18. I hereby certify that the foregoing is true and correct

SIGNED [signature] TITLE Eng. Supervisor So. Operations DATE 7-28-86

(This space for Federal or State office use)

APPROVED BY _____ TITLE _____ DATE _____
CONDITIONS OF APPROVAL, IF ANY:

APPROVED BY THE STATE OF UTAH DIVISION OF OIL, GAS, AND MINING
DATE: 8-1-86
BY: John R. Baza

*See Instructions on Reverse Side

Form OGC-1b

STATE OF UTAH
DEPARTMENT OF NATURAL RESOURCES
DIVISION OF OIL, GAS, AND MINING

SUBMIT IN TRIPLICATE
(Other instructions on reverse side)

081810

SUNDRY NOTICES AND REPORTS ON WELLS

(Do not use this form for proposals to drill or to deepen or plug back to a different reservoir. Use "APPLICATION FOR PERMIT—" for such proposals.)

1. OIL WELL [ ] GAS WELL [X] OTHER

2. NAME OF OPERATOR: AMOCO PRODUCTION COMPANY

3. ADDRESS OF OPERATOR: P. O. BOX 829, Evanston, Wyoming 82930

4. LOCATION OF WELL (Report location clearly and in accordance with any State requirements.* See also space 17 below.) At surface: 936' FWL & 1291' FNL

5. LEASE DESIGNATION AND SERIAL NO.: Fee

6. IF INDIAN, ALLOTTEE OR TRIBE NAME:

7. UNIT AGREEMENT NAME: Anschtuz Ranch East

8. FARM OR LEASE NAME: W20-06

9. WELL NO.: W20-06

10. FIELD AND POOL, OR WILDCAT: Nugget

11. SEC., T., R., M., OR BLK. AND SURVEY OR AREA: Sec. 20, T4N, R8E

14. PERMIT NO.: 43-043-30159

15. ELEVATIONS (Show whether DF, RT, GR, etc.): 7559' KB 7534' GL

12. COUNTY OR PARISH: Summit

13. STATE: Utah

16. **Check Appropriate Box To Indicate Nature of Notice, Report, or Other Data**

NOTICE OF INTENTION TO:				SUBSEQUENT REPORT OF:			
TEST WATER SHUT-OFF	[ ]	PULL OR ALTER CASING	[ ]	WATER SHUT-OFF	[ ]	REPAIRING WELL	[ ]
FRACTURE TREAT	[ ]	MULTIPLE COMPLETE	[ ]	FRACTURE TREATMENT	[ ]	ALTERING CASING	[ ]
SHOOT OR ACIDIZE	[X]	ABANDON*	[ ]	SHOOTING OR ACIDIZING	[ ]	ABANDONMENT*	[ ]
REPAIR WELL	[ ]	CHANGE PLANS	[ ]	(Other)			[ ]
(Other)			[ ]				

(NOTE: Report results of multiple completion on Well Completion or Recompletion Report and Log form.)

17. DESCRIBE PROPOSED OR COMPLETED OPERATIONS (Clearly state all pertinent details, and give pertinent dates, including estimated date of starting any proposed work. If well is directionally drilled, give subsurface locations and measured and true vertical depths for all markers and zones pertinent to this work.)*

As a result of dicovering cement underneath a castiron bridge plug after cement squeezing the intervals:

13,248' - 13,268'
13,292' - 13,346'

The following lower Zone 2 intervals will be re-perforated:

13,370' - 13,392'
13,418' - 13,446'
13,470' - 13,490'
13,514' - 13,533'

Work should begin 8-12-86 and should be complete by 8-13-86

RECEIVED
AUG 13 1986
DIVISION OF OIL, GAS & MINING

18. I hereby certify that the foregoing is true and correct

SIGNED Lon C. Buehner TITLE Operations Supervisor DATE 8-11-86

(This space for Federal or State office use)

APPROVED BY _____ TITLE _____

CONDITIONS OF APPROVAL, IF ANY:

APPROVED BY THE STATE OF UTAH DIVISION OF OIL, GAS, AND MINING
DATE: 8-18-86
BY: John R. Baza

*See Instructions on Reverse Side

Form OGC-1b

STATE OF UTAH
DEPARTMENT OF NATURAL RESOURCES
DIVISION OF OIL, GAS, AND MINING

SUBMIT IN TRIPLICATE
(Other instructions on reverse side)

4

081817

SUNDRY NOTICES AND REPORTS ON WELLS

(Do not use this form for proposals to drill or to deepen or plug back to a different reservoir. Use "APPLICATION FOR PERMIT—" for such proposals.)

1. OIL WELL [ ] GAS WELL [X] OTHER

2. NAME OF OPERATOR: AMOCO PRODUCTION COMPANY

3. ADDRESS OF OPERATOR: P. O. Box 829, Evanston, Wyoming 82930

4. LOCATION OF WELL (Report location clearly and in accordance with any State requirements.* See also space 17 below.) At surface: 936' FWL & 1291' FNL

5. LEASE DESIGNATION AND SERIAL NO.: Fee

6. IF INDIAN, ALLOTTEE OR TRIBE NAME:

7. UNIT AGREEMENT NAME: Anschutz Ranch East

8. FARM OR LEASE NAME: W20-06

9. WELL NO.: W20-06

10. FIELD AND POOL, OR WILDCAT: Nugget

11. SEC., T., R., M., OR BLK. AND SURVEY OR AREA: Sec. 20, T4N, R8E

14. PERMIT NO.: 43-043-30159

15. ELEVATIONS (Show whether DF, RT, GR, etc.): 7559' KB 7534' GL

12. COUNTY OR PARISH: Summit

13. STATE: Utah

16. **Check Appropriate Box To Indicate Nature of Notice, Report, or Other Data**

NOTICE OF INTENTION TO:				SUBSEQUENT REPORT OF:			
TEST WATER SHUT-OFF	[ ]	PULL OR ALTER CASING	[ ]	WATER SHUT-OFF	[ ]	REPAIRING WELL	[ ]
FRACTURE TREAT	[ ]	MULTIPLE COMPLETE	[ ]	FRACTURE TREATMENT	[ ]	ALTERING CASING	[ ]
SHOOT OR ACIDIZE	[ ]	ABANDON*	[ ]	SHOOTING OR ACIDIZING	[ ]	ABANDONMENT*	[ ]
REPAIR WELL	[ ]	CHANGE PLANS	[ ]	(Other)			[X] ✓
(Other)			[ ]				

(NOTE: Report results of multiple completion on Well Completion or Recompletion Report and Log form.)

17. DESCRIBE PROPOSED OR COMPLETED OPERATIONS (Clearly state all pertinent details, and give pertinent dates, including estimated date of starting any proposed work. If well is directionally drilled, give subsurface locations and measured and true vertical depths for all markers and zones pertinent to this work.)*

A cast iron bridge plug was set by wireline @ 13,361' and a cement retainer was set @ 13,120'. The two perforated intervals: 13,248'-13,268' and 13,292' - 13,346' were squeezed with 200 sx Class "H" cement. The cement retainer and cast iron bridge plug were then drilled out to a PBTD of 13,880'. A production packer and tubing were then run in the well and the well was placed back on production 8-9-86.

RECEIVED
AUG 13 1986
DIVISION OF OIL, GAS & MINING

18. I hereby certify that the foregoing is true and correct

SIGNED Don O. Buehner TITLE Operations Supervisor DATE 8-11-86

(This space for Federal or State office use)

APPROVED BY _____ TITLE _____ DATE _____

CONDITIONS OF APPROVAL, IF ANY:

*See Instructions on Reverse Side

Form OGC-1b

STATE OF UTAH
DEPARTMENT OF NATURAL RESOURCES
DIVISION OF OIL, GAS, AND MINING

SUBMIT IN TRIPLICATE
(Other instructions on reverse side)

082604

SUNDRY NOTICES AND REPORTS ON WELLS

(Do not use this form for proposals to drill or to deepen or plug back to a different reservoir. Use "APPLICATION FOR PERMIT—" for such proposals.)

RECEIVED
AUG 22 1986
DIVISION OF OIL, GAS & MINING

1. OIL WELL [ ] GAS WELL [X] OTHER

2. NAME OF OPERATOR: AMOCO PRODCUTION COMPANY

3. ADDRESS OF OPERATOR: P. O. BOX 829, EVANSTON, WYOMING 82930

4. LOCATION OF WELL (Report location clearly and in accordance with any State requirements. See also space 17 below.) At surface: 936' FWL & 1291' FNL

5. LEASE DESIGNATION AND SERIAL NO.: Fee

6. IF INDIAN, ALLOTTEE OR TRIBE NAME:

7. UNIT AGREEMENT NAME: Anschutz Ranch East

8. FARM OR LEASE NAME: W20-06

9. WELL NO.: W20-06

10. FIELD AND POOL, OR WILDCAT: Nugget

11. SEC., T., R., M., OR BLK. AND SURVEY OR AREA: Sec. 20, T4N, R8E

14. PERMIT NO.: 43-043-30159

15. ELEVATIONS (Show whether DF, RT, GR, etc.): 7559' KB 7534' GL

12. COUNTY OR PARISH: Summit

13. STATE: Utah

16. **Check Appropriate Box To Indicate Nature of Notice, Report, or Other Data**

NOTICE OF INTENTION TO:				SUBSEQUENT REPORT OF:			
TEST WATER SHUT-OFF	[ ]	PULL OR ALTER CASING	[ ]	WATER SHUT-OFF	[ ]	REPAIRING WELL	[ ]
FRACTURE TREAT	[ ]	MULTIPLE COMPLETE	[ ]	FRACTURE TREATMENT	[ ]	ALTERING CASING	[ ]
SHOOT OR ACIDIZE	[ ]	ABANDON*	[ ]	SHOOTING OR ACIDIZING	[X]	ABANDONMENT*	[ ]
REPAIR WELL	[ ]	CHANGE PLANS	[ ]	(Other)			[ ]
(Other)			[ ]	(NOTE: Report results of multiple completion on Well Completion or Recompletion Report and Log form.)			

17. DESCRIBE PROPOSED OR COMPLETED OPERATIONS (Clearly state all pertinent details, and give pertinent dates, including estimated date of starting any proposed work. If well is directionally drilled, give subsurface locations and measured and true vertical depths for all markers and zones pertinent to this work.)*

The following intervals were perforated with 2" through tubing guns at 4JSPF on 08-18-86:

13,370' - 13,392'
13,418' - 13,446'
13,470' - 13,490'
13,514' - 13,533'

The work was done with a wireline mast truck and work was completed on 08-18-86.

18. I hereby certify that the foregoing is true and correct

SIGNED R. D. Moritz TITLE Staff Fac. Eng. Supervisor DATE 8-20-86

(This space for Federal or State office use)

APPROVED BY _____ TITLE _____ DATE _____

CONDITIONS OF APPROVAL, IF ANY:

*See Instructions on Reverse Side

Form OGC-1b

STATE OF UTAH
DEPARTMENT OF NATURAL RESOURCES
DIVISION OF OIL, GAS, AND MINING 090907

SUBMIT IN TRIPLICATE*
(Other instructions on reverse side)

SUNDRY NOTICES AND REPORTS ON WELLS

(Do not use this form for proposals to drill or to deepen or plug back to a different reservoir. Use "APPLICATION FOR PERMIT—" for such proposals.)

1. OIL WELL ☐ GAS WELL ☒ OTHER

2. NAME OF OPERATOR: AMOCO PRODUCTION COMPANY

3. ADDRESS OF OPERATOR: P. O. BOX 829, EVANSTON, WYOMING 82930

4. LOCATION OF WELL (Report location clearly and in accordance with any State requirements.* See also space 17 below.) At surface: 936' FWL & 1291' FNL

5. LEASE DESIGNATION AND SERIAL NO.: Fee

6. IF INDIAN, ALLOTTEE OR TRIBE NAME:

7. UNIT AGREEMENT NAME: Anschutz Ranch East

8. FARM OR LEASE NAME: W20-06

9. WELL NO.: W20-06

10. FIELD AND POOL, OR WILDCAT: Nugget

11. SEC., T., R., M., OR BLK. AND SURVEY OR AREA: Sec. 20, T4N, R8E

12. COUNTY OR PARISH: Summit

13. STATE: Utah

14. PERMIT NO.: 43-043-30159

15. ELEVATIONS (Show whether DF, RT, GR, etc.): 7559' KB 7534' GL

16. Check Appropriate Box To Indicate Nature of Notice, Report, or Other Data

NOTICE OF INTENTION TO:				SUBSEQUENT REPORT OF:			
TEST WATER SHUT-OFF		PULL OR ALTER CASING		WATER SHUT-OFF		REPAIRING WELL	
FRACTURE TREAT		MULTIPLE COMPLETE		FRACTURE TREATMENT		ALTERING CASING	
SHOOT OR ACIDIZE	X	ABANDON*		SHOOTING OR ACIDIZING		ABANDONMENT*	
REPAIR WELL		CHANGE PLANS		(Other)			
(Other)							

(NOTE: Report results of multiple completion on Well Completion or Recompletion Report and Log form.)

17. DESCRIBE PROPOSED OR COMPLETED OPERATIONS (Clearly state all pertinent details, and give pertinent dates, including estimated date of starting any proposed work. If well is directionally drilled, give subsurface locations and measured and true vertical depths for all markers and zones pertinent to this work.)*

A cast iron bridge plug will be run and set at 13,240' to isolate Zone 1 pay from Zones 2 & 3 pay. Production tubing and a packer will be run back in the well and the following lower Zone 1 interval will be perforated: 13,135' - 13,215'. Work is expected to begin on September 2, 1986 and should conclude September 5, 1986. This work was discussed between Bruce Leggett (Amoco) and John Baza of UTO&G on August 28, 1986 at 2:45 p.m.

RECEIVED
SEP 02 1986
DIVISION OF
OIL, GAS & MINING

18. I hereby certify that the foregoing is true and correct

SIGNED Vann E. Prater TITLE Sr Stf PEt Eng Supervisor DATE 8-29-86

(This space for Federal or State office use)

APPROVED BY _____ TITLE _____
CONDITIONS OF APPROVAL, IF ANY:

APPROVED BY THE STATE OF UTAH DIVISION OF OIL, GAS, AND MINING
DATE: 9-2-86
BY: John R. Baza

*See Instructions on Reverse Side

Form OGC-1b

SUBMIT IN TRIPLICATE*
(Other instructions on reverse side)

4

STATE OF UTAH
DEPARTMENT OF NATURAL RESOURCES
DIVISION OF OIL, GAS, AND MINING

091904

SUNDRY NOTICES AND REPORTS ON WELLS

(Do not use this form for proposals to drill or to deepen or plug back to a different reservoir. Use "APPLICATION FOR PERMIT—" for such proposals.)

1. OIL WELL [ ] GAS WELL [X] OTHER

2. NAME OF OPERATOR: AMOCO PRODUCTION COMPANY

3. ADDRESS OF OPERATOR: P. O. BOX 829, EVANSTON, WYOMING 82930

4. LOCATION OF WELL (Report location clearly and in accordance with any State requirements.* See also space 17 below.) At surface: 936' FWL & 1291' FNL

5. LEASE DESIGNATION AND SERIAL NO.: Fee

6. IF INDIAN, ALLOTTEE OR TRIBE NAME:

7. UNIT AGREEMENT NAME: Anschutz Ranch East

8. FARM OR LEASE NAME: Anschtuz Ranch East

9. WELL NO.: W20-06

10. FIELD AND POOL, OR WILDCAT: Nugget

11. SEC., T., R., M., OR BLK. AND SURVEY OR AREA: Sec. 20, T4N, R8E

12. COUNTY OR PARISH: Summit

13. STATE: Utah

14. PERMIT NO.: 43-043-30159

15. ELEVATIONS (Show whether DF, RT, GR, etc.): 7559' KB 7534' GL

16. **Check Appropriate Box To Indicate Nature of Notice, Report, or Other Data**

NOTICE OF INTENTION TO:				SUBSEQUENT REPORT OF:			
TEST WATER SHUT-OFF	[ ]	PULL OR ALTER CASING	[ ]	WATER SHUT-OFF	[ ]	REPAIRING WELL	[ ]
FRACTURE TREAT	[ ]	MULTIPLE COMPLETE	[ ]	FRACTURE TREATMENT	[ ]	ALTERING CASING	[ ]
SHOOT OR ACIDIZE	[ ]	ABANDON*	[ ]	SHOOTING OR ACIDIZING	[X]	ABANDONMENT*	[ ]
REPAIR WELL	[ ]	CHANGE PLANS	[ ]	(Other)			[ ]
(Other)			[ ]	(NOTE: Report results of multiple completion on Well Completion or Recompletion Report and Log form.)			

17. DESCRIBE PROPOSED OR COMPLETED OPERATIONS (Clearly state all pertinent details, and give pertinent dates, including estimated date of starting any proposed work. If well is directionally drilled, give subsurface locations and measured and true vertical depths for all markers and zones pertinent to this work.)*

A castiron bridge plug was run and set at 13,240' isolating Zones 2 & 3 from Zone 1. A retrievable packer and production tubing were run back in the well and the packer was set at 12,714'. The interval 13,135' - 13,215' was perforated in lower Zone 1 and the well was flared to a pit to clean it up. The rig was moved off location on September 8, 1986 and the well was flowing to the Anschtuz Ranch East Plant.

RECEIVED
SEP 17 1986
DIVISION OF
OIL, GAS & MINING

18. I hereby certify that the foregoing is true and correct

SIGNED [signature] TITLE _____ DATE 9-15-86

(This space for Federal or State office use)

APPROVED BY _____ TITLE _____ DATE _____

CONDITIONS OF APPROVAL, IF ANY:

*See Instructions on Reverse Side

Form OGC-1b

STATE OF UTAH
DEPARTMENT OF NATURAL RESOURCES
DIVISION OF OIL, GAS, AND MINING

SUBMIT IN TRIPLICATE*
(Other instructions on reverse side)

2

082904

SUNDRY NOTICES AND REPORTS ON WELLS

(Do not use this form for proposals to drill or to deepen or plug back to a different reservoir. Use "APPLICATION FOR PERMIT—" for such proposals.)

RECEIVED SEP 25 1986 DIVISION OF OIL, GAS & MINING

1. OIL WELL [ ] GAS WELL [X] OTHER

2. NAME OF OPERATOR: AMOCO PRODUCTION COMPANY

3. ADDRESS OF OPERATOR: P. O. BOX 829, EVANSTON, WYOMING 82930

4. LOCATION OF WELL (Report location clearly and in accordance with any State requirements. See also space 17 below.) At surface: 936' FWL & 1291' FNL

5. LEASE DESIGNATION AND SERIAL NO.: Fee

6. IF INDIAN, ALLOTTEE OR TRIBE NAME:

7. UNIT AGREEMENT NAME: Anschutz Ranch East

8. FARM OR LEASE NAME: W20-06

9. WELL NO.: W20-06

10. FIELD AND POOL, OR WILDCAT: Nugget

11. SEC., T., R., M., OR BLK. AND SURVEY OR AREA: Sec. 20, T4N, R8E

14. PERMIT NO.: 43-043-30159

15. ELEVATIONS (Show whether DF, RT, GR, etc.): 7559' KB 7534' GL

12. COUNTY OR PARISH: Summit

13. STATE: Utah

16. **Check Appropriate Box To Indicate Nature of Notice, Report, or Other Data**

NOTICE OF INTENTION TO:				SUBSEQUENT REPORT OF:			
TEST WATER SHUT-OFF	[ ]	PULL OR ALTER CASING	[ ]	WATER SHUT-OFF	[ ]	REPAIRING WELL	[ ]
FRACTURE TREAT	[ ]	MULTIPLE COMPLETE	[ ]	FRACTURE TREATMENT	[ ]	ALTERING CASING	[ ]
SHOOT OR ACIDIZE	[X]	ABANDON*	[ ]	SHOOTING OR ACIDIZING	[ ]	ABANDONMENT*	[ ]
REPAIR WELL	[ ]	CHANGE PLANS	[ ]	(Other)			[ ]
(Other)			[ ]				

(NOTE: Report results of multiple completion on Well Completion or Recompletion Report and Log form.)

17. DESCRIBE PROPOSED OR COMPLETED OPERATIONS (Clearly state all pertinent details, and give pertinent dates, including estimated date of starting any proposed work. If well is directionally drilled, give subsurface locations and measured and true vertical depths for all markers and zones pertinent to this work.)*

The following intervals in Zone 1 of the Nugget will be perforated:

13,092' - 13,115'
13,008' - 13,063'

The guns to be used will be 4JSPF, 0 degrees phased, decentralized 6.4 gm premimum charges. The bottom most interval will be perforated first and tested, then the top interval will be perforated and tested together with the intervals open below.

18. I hereby certify that the foregoing is true and correct

SIGNED [signature] TITLE STAF FAC ENG SUPV DATE 9-22-86

(This space for Federal or State office use)

APPROVED BY _____ TITLE _____ DATE _____

CONDITIONS OF APPROVAL, IF ANY:

APPROVED BY THE STATE OF UTAH DIVISION OF OIL, GAS, AND MINING
DATE: 9-26-86
BY: John R. Baya

*See Instructions on Reverse Side

Form OGC-1b

STATE OF UTAH
DEPARTMENT OF NATURAL RESOURCES
DIVISION OF OIL, GAS, AND MINING

SUBMIT IN TRIPLICATE*
(Other instructions on reverse side)

100709

SUNDRY NOTICES AND REPORTS ON WELLS

(Do not use this form for proposals to drill or to deepen or plug back to a different reservoir. Use "APPLICATION FOR PERMIT—" for such proposals.)

1. OIL WELL [ ] GAS WELL [X] OTHER

2. NAME OF OPERATOR: AMOCO PRODUCTION COMPANY

3. ADDRESS OF OPERATOR: P. O. BOX 829, EVANSTON, WYOMING 82930

4. LOCATION OF WELL (Report location clearly and in accordance with any State requirements.* See also space 17 below.) At surface: 936' FWL & 1291' FNL

RECEIVED SEP 29 1986 DIVISION OF OIL, GAS & MINING

5. LEASE DESIGNATION AND SERIAL NO.: Fee

6. IF INDIAN, ALLOTTEE OR TRIBE NAME:

7. UNIT AGREEMENT NAME: Anshcutz Ranch East

8. FARM OR LEASE NAME: W20-06

9. WELL NO.: W20-06

10. FIELD AND POOL, OR WILDCAT: Nugget

11. SEC., T., R., M., OR BLK. AND SURVEY OR AREA: Sec. 20, T4N, R8E

12. COUNTY OR PARISH: Summit

13. STATE: UT

14. PERMIT NO.: 43-043-30159

15. ELEVATIONS (Show whether DF, RT, GR, etc.): 7559' KB 7534' GL

16. **Check Appropriate Box To Indicate Nature of Notice, Report, or Other Data**

NOTICE OF INTENTION TO:				SUBSEQUENT REPORT OF:			
TEST WATER SHUT-OFF	[ ]	PULL OR ALTER CASING	[ ]	WATER SHUT-OFF	[ ]	REPAIRING WELL	[ ]
FRACTURE TREAT	[ ]	MULTIPLE COMPLETE	[ ]	FRACTURE TREATMENT	[ ]	ALTERING CASING	[ ]
SHOOT OR ACIDIZE	[ ]	ABANDON*	[ ]	SHOOTING OR ACIDIZING	[ ]	ABANDONMENT*	[ ]
REPAIR WELL	[ ]	CHANGE PLANS	[ ]	(Other)			[ ]
(Other)			[X]				

(NOTE: Report results of multiple completion on Well Completion or Recompletion Report and Log form.)

17. DESCRIBE PROPOSED OR COMPLETED OPERATIONS (Clearly state all pertinent details, and give pertinent dates, including estimated date of starting any proposed work. If well is directionally drilled, give subsurface locations and measured and true vertical depths for all markers and zones pertinent to this work.)*

A cement retainer will be set at 13,080' and the following intervals in Zone 1 will be cement squeezed with 150 sx of Class "H" cement:

13,092' - 13,115'
13,135' - 13,215'

The well will then be perforated at 13,008' to 13,063'.
Work should begin September 16th and should be compelted by October 1, 1986.

This work was discussed between John Baza UTO&GC and Bruce Leggett Amoco on September 26, 1986 at 8:15 a.m.

18. I hereby certify that the foregoing is true and correct

SIGNED [signature] TITLE Stf. Fac. Eng. Supervisor DATE 9-26-86

(This space for Federal or State office use)

APPROVED BY _____ TITLE _____ DATE _____

CONDITIONS OF APPROVAL, IF ANY:

APPROVED BY THE STATE OF UTAH DIVISION OF OIL, GAS, AND MINING
DATE: 10-3-86
BY: John R. Baza

*See Instructions on Reverse Side

Form OGC-1b

STATE OF UTAH
DEPARTMENT OF NATURAL RESOURCES
DIVISION OF OIL, GAS, AND MINING

SUBMIT IN TRIPLICATE*
(Other instructions on reverse side)

101626

4

SUNDRY NOTICES AND REPORTS ON WELLS

(Do not use this form for proposals to drill or to deepen or plug back to a different reservoir. Use "APPLICATION FOR PERMIT—" for such proposals.)

1. OIL WELL ☐ GAS WELL ☒ OTHER

2. NAME OF OPERATOR: AMOCO PRODUCTION COMPANY

3. ADDRESS OF OPERATOR: P. O. BOX 829, EVANSTON, WYOMING 82930

4. LOCATION OF WELL (Report location clearly and in accordance with any State requirements. See also space 17 below.) At surface: 936' FWL & 1291' FNL

RECEIVED OCT 14 1986 DIVISION OF OIL, GAS & MINING

5. LEASE DESIGNATION AND SERIAL NO.: Fee

6. IF INDIAN, ALLOTTEE OR TRIBE NAME:

7. UNIT AGREEMENT NAME: Anschutz Ranch East

8. FARM OR LEASE NAME: W20-06

9. WELL NO.: W20-06

10. FIELD AND POOL, OR WILDCAT: Nugget

11. SEC., T., R., M., OR BLK. AND SURVEY OR AREA: Sec. 20, T4N, R8E

12. COUNTY OR PARISH: Summit

13. STATE: UT

14. PERMIT NO.: 43-043-30159

15. ELEVATIONS (Show whether DF, RT, GR, etc.): 7559' KB 7534' GL

16. **Check Appropriate Box To Indicate Nature of Notice, Report, or Other Data**

NOTICE OF INTENTION TO:				SUBSEQUENT REPORT OF:			
TEST WATER SHUT-OFF	☐	PULL OR ALTER CASING	☐	WATER SHUT-OFF	☐	REPAIRING WELL	☐
FRACTURE TREAT	☐	MULTIPLE COMPLETE	☐	FRACTURE TREATMENT	☐	ALTERING CASING	☐
SHOOT OR ACIDIZE	☐	ABANDON*	☐	SHOOTING OR ACIDIZING	X	ABANDONMENT*	☐
REPAIR WELL	☐	CHANGE PLANS	☐	(Other) Cement squeeze			☐
(Other)	☐						

(NOTE: Report results of multiple completion on Well Completion or Recompletion Report and Log form.)

17. DESCRIBE PROPOSED OR COMPLETED OPERATIONS (Clearly state all pertinent details, and give pertinent dates, including estimated date of starting any proposed work. If well is directionally drilled, give subsurface locations and measured and true vertical depths for all markers and zones pertinent to this work.)*

The interval: 13,092' - 13,115' was perforated in the middle of Zone 1 while the well was flowing in an underbalanced condition. The well was then tested to the ARE plant for several days and produced a high GOR-high nitrogen content gas. Our original plan of perforating 13,008' - 13,063' was changed based upon the high GOR tests already seen in the other two Zone 1 intervals perforated. The interval 13,008' - 13,063' was not perforated and a cement retainer was run and set at 12,960'. The two Zone 1 intervals: 13,092' - 13,115' and 13,135' - 13,215' were cement squeezed with 75 sx of Class H cement. The cement retainer cement, and cast iron bridge plug at 13,240' were drilled and pushed to bottom at 13,864'. A packer and production tubing were run back in the well and the packer was set at 13,008'. The well was back on production to the plant on 10-4-86.

18. I hereby certify that the foregoing is true and correct

SIGNED Louis T. Lozzie TITLE Administrative Supervisor DATE 10-9-86

(This space for Federal or State office use)

APPROVED BY _____ TITLE _____ DATE _____

CONDITIONS OF APPROVAL, IF ANY:

*See Instructions on Reverse Side

Form OGC-1b

SUBMIT IN TRIPLICATE*
(Other instructions on reverse side)

STATE OF UTAH
DEPARTMENT OF NATURAL RESOURCES
DIVISION OF OIL, GAS, AND MINING

SUNDRY NOTICES AND REPORTS ON WELLS

(Do not use this form for proposals to drill or to deepen or plug back to a different reservoir. Use "APPLICATION FOR PERMIT—" for such proposals.)

5. LEASE DESIGNATION AND SERIAL NO.	FEE
6. IF INDIAN, ALLOTTEE OR TRIBE NAME	
7. UNIT AGREEMENT NAME	Anschutz Ranch East
8. FARM OR LEASE NAME	Anschutz Ranch East
9. WELL NO.	W20-06
10. FIELD AND POOL, OR WILDCAT	Nugget
11. SEC., T., R., M., OR BLK. AND SURVEY OR AREA	Sec. 20, T4N-R8E
12. COUNTY OR PARISH	Summit
13. STATE	Utah

1. OIL WELL ☐ GAS WELL ☒ OTHER
2. NAME OF OPERATOR: Amoco Production Company
3. ADDRESS OF OPERATOR: P. O. Box 800, Rm 1870, Denver, CO 80201
4. LOCATION OF WELL (Report location clearly and in accordance with any State requirements.* See also space 17 below.) At surface: Sec. 20, 1291' FNL x 936' FWL
14. PERMIT NO.: 43-043-30159
15. ELEVATIONS (Show whether DF, RT, GR, etc.):

16. **Check Appropriate Box To Indicate Nature of Notice, Report, or Other Data**

NOTICE OF INTENTION TO:				SUBSEQUENT REPORT OF:			
TEST WATER SHUT-OFF	☐	PULL OR ALTER CASING	☐	WATER SHUT-OFF	☐	REPAIRING WELL	☐
FRACTURE TREAT	☐	MULTIPLE COMPLETE	☐	FRACTURE TREATMENT	☐	ALTERING CASING	☐
SHOOT OR ACIDIZE	☐	ABANDON*	☐	SHOOTING OR ACIDIZING	☐	ABANDONMENT*	☐
REPAIR WELL	☐	CHANGE PLANS	☐	(Other)			☐
(Other)			☒				

(Note: Report results of multiple completion on Well Completion or Recompletion Report and Log form.)

17. DESCRIBE PROPOSED OR COMPLETED OPERATIONS (Clearly state all pertinent details, and give pertinent dates, including estimated date of starting any proposed work. If well is directionally drilled, give subsurface locations and measured and true vertical depths for all markers and zones pertinent to this work.)*

Amoco Production Company requests authorization to repair/replace corroded tubing to eliminate tubing to annulus communication in addition to reperforating the Nugget formation using the following procedure:

1. Pull tubing for inpsection and replacement purposes.
2. Reperforate in the Nugget formation from 13,008'-13038', 13046'-13064' and 13092'-13115' using 4 JSPF.
3. Pressure test the annulus to 1500 psi.
4. Run new tubing string.
5. RTP.

If you require additional information, please contact Raelene Kneil at (303) 830-5399.

APPROVED BY THE STATE OF UTAH DIVISION OF OIL, GAS, AND MINING
DATE: 7-1-92
BY: [signature]

18. I hereby certify that the foregoing is true and correct
SIGNED [signature] TITLE Permitting Representative DATE

(This space for Federal or State office use)

APPROVED BY _____ TITLE _____ DATE _____
CONDITIONS OF APPROVAL, IF ANY:

*See Instructions on Reverse Side

Facsimile Transmission

	Addressee's Telecopier Phone	Date	Page of
To: Frank Matthews	Company	Location	Mail Code/Room
From: R. Kreil	Company Amoco	Location Denver	Mail Code/Room
Initiated By	Department	Approved By	
Typed By	Ext.	Mail Code/Room	☐ Call Sender for Pickup of Originals ☐ Call _____ for Pickup at Receiving Location

Sundry notice attached per conversation between Rick Ross (Amoco) & Frank Matthews ~~(Be~~ (Utah). The original is in the mail.

Please call w/ questions.
(303) 830-5399

Raelene Kreil

Form 1008 Jun-88

Form OGC-1b

STATE OF UTAH
DEPARTMENT OF NATURAL RESOURCES
DIVISION OF OIL, GAS, AND MINING

SUBMIT IN TRIPLICATE*
(Other instructions on reverse side)

SUNDRY NOTICES AND REPORTS ON WELLS

(Do not use this form for proposals to drill or to deepen or plug back to a different reservoir. Use "APPLICATION FOR PERMIT—" for such proposals.)

1. OIL WELL ☐ GAS WELL ☒ OTHER

2. NAME OF OPERATOR: Amoco Production Company

3. ADDRESS OF OPERATOR: P. O. Box 800, Rm 1878, Denver, CO 80201

4. LOCATION OF WELL (Report location clearly and in accordance with any State requirements.* See also space 17 below.) At surface: Sec. 20, 1291' FNL x 936' FWL

5. LEASE DESIGNATION AND SERIAL NO.: FEE

6. IF INDIAN, ALLOTTEE OR TRIBE NAME:

7. UNIT AGREEMENT NAME: Anschutz Ranch East

8. FARM OR LEASE NAME: Anschutz Ranch East

9. WELL NO.: W20-06

10. FIELD AND POOL, OR WILDCAT: Nugget

11. SEC., T., R., M., OR BLK. AND SURVEY OR AREA: Sec. 20, T4N-R8E

14. PERMIT NO.: 43-043-30159

15. ELEVATIONS (Show whether DF, RT, GR, etc.):

12. COUNTY OR PARISH: Summit

13. STATE: Utah

16. **Check Appropriate Box To Indicate Nature of Notice, Report, or Other Data**

NOTICE OF INTENTION TO:				SUBSEQUENT REPORT OF:			
TEST WATER SHUT-OFF	☐	PULL OR ALTER CASING	☐	WATER SHUT-OFF	☐	REPAIRING WELL	☐
FRACTURE TREAT	☐	MULTIPLE COMPLETE	☐	FRACTURE TREATMENT	☐	ALTERING CASING	☐
SHOOT OR ACIDIZE	☐	ABANDON*	☐	SHOOTING OR ACIDIZING	☐	ABANDONMENT*	☐
REPAIR WELL	☐	CHANGE PLANS	☐	(Other)			☐
(Other)			☒				

(NOTE: Report results of multiple completion on Well Completion or Recompletion Report and Log form.)

17. DESCRIBE PROPOSED OR COMPLETED OPERATIONS (Clearly state all pertinent details, and give pertinent dates, including estimated date of starting any proposed work. If well is directionally drilled, give subsurface locations and measured and true vertical depths for all markers and zones pertinent to this work.)*

Amoco Production Company requests authorization to repair/replace corroded tubing to eliminate tubing to annulus communication in addition to reperforating the Nugget formation using the following procedure:

1. Pull tubing for inpsection and replacement purposes.
2. Reperforate in the Nugget formation from 13,008'-13038', 13046'-13064' and 13092'-13115' using 4 JSPF.
3. Pressure test the annulus to 1500 psi.
4. Run new tubing string.
5. RTP.

RECEIVED
JUL 0 6 1992
DIVISION OF OIL GAS & MINING

APPROVED BY THE STATE OF UTAH DIVISION OF OIL, GAS, AND MINING
DATE: 7-7-92
BY: [illegible]

If you require additional information please contact Raelene Krcil at (303) 830-5399.

18. I hereby certify that the foregoing is true and correct

SIGNED: Raelene Krcil TITLE: Permitting Representative DATE: 07/01/92

(This space for Federal or State office use)

APPROVED BY _____ TITLE _____ DATE _____

CONDITIONS OF APPROVAL, IF ANY:

*See Instructions on Reverse Side

LAST UPDATED: 7/19/86

ANSCHUTZ RANCH EAST WELLBORE DIAGRAM
W20-06

LOCATION: 1289' FNL X 930' FWL. SECT. 20. T4N. R8E
ELEVATION: 7534' GL / 7563' KB

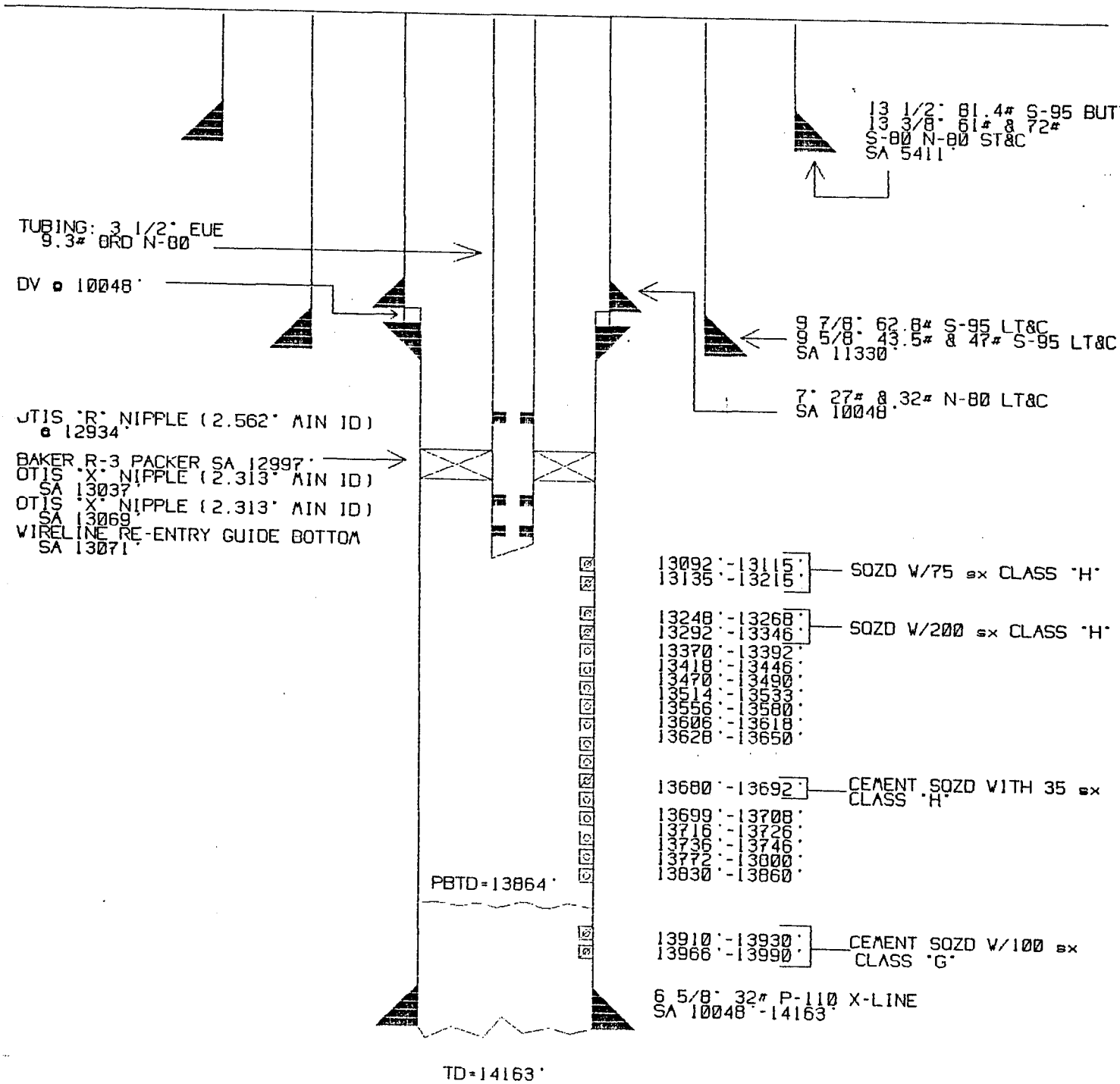

TUBING IN HOLE SINCE 1986. NO HISTORICAL PROBLEMS WITH CORROSION

Form OGC-1b

STATE OF UTAH
DEPARTMENT OF NATURAL RESOURCES
DIVISION OF OIL, GAS, AND MINING

SUBMIT IN TRIPLICATE*
(Other instructions on reverse side)

SUNDRY NOTICES AND REPORTS ON WELLS

(Do not use this form for proposals to drill or to deepen or plug back to a different reservoir. Use "APPLICATION FOR PERMIT—" for such proposals.)

RECEIVED
JUL 29 1992
DIVISION OF OIL, GAS & MINING

1. OIL WELL ☐ GAS WELL ☒ OTHER

2. NAME OF OPERATOR: Amoco Production Company

3. ADDRESS OF OPERATOR: P. O. Box 800, Rm 1870, Denver, CO 80201

4. LOCATION OF WELL (Report location clearly and in accordance with any State requirements.* See also space 17 below.) At surface: Sec. 20, 1291' FNL x 936' FWL

5. LEASE DESIGNATION AND SERIAL NO.: FEE

6. IF INDIAN, ALLOTTEE OR TRIBE NAME:

7. UNIT AGREEMENT NAME: Anschutz Ranch East

8. FARM OR LEASE NAME: Anschutz Ranch East

9. WELL NO.: W20-06

10. FIELD AND POOL, OR WILDCAT: Nugget

11. SEC., T., R., M., OR BLK. AND SURVEY OR AREA: Sec. 20, T4N-R8E

14. PERMIT NO.: 43-043-30159

15. ELEVATIONS (Show whether DF, RT, GR, etc.):

12. COUNTY OR PARISH: Summit

13. STATE: Utah

16. **Check Appropriate Box To Indicate Nature of Notice, Report, or Other Data**

NOTICE OF INTENTION TO:				SUBSEQUENT REPORT OF:			
TEST WATER SHUT-OFF	☐	PULL OR ALTER CASING	☐	WATER SHUT-OFF	☐	REPAIRING WELL	☐
FRACTURE TREAT	☐	MULTIPLE COMPLETE	☐	FRACTURE TREATMENT	☐	ALTERING CASING	☐
SHOOT OR ACIDIZE	☐	ABANDON*	☐	SHOOTING OR ACIDIZING	☒	ABANDONMENT*	☐
REPAIR WELL	☐	CHANGE PLANS	☐	(Other)			☐
(Other)			☐				

(NOTE: Report results of multiple completion on Well Completion or Recompletion Report and Log form.)

17. DESCRIBE PROPOSED OR COMPLETED OPERATIONS (Clearly state all pertinent details, and give pertinent dates, including estimated date of starting any proposed work. If well is directionally drilled, give subsurface locations and measured and true vertical depths for all markers and zones pertinent to this work.)*

Amoco Production Company replaced corroded tubing to eliminate tubing to annulus communication in addition to reperforating the Nugget formation using the following procedure:

1. Pressure tested casing to 1500 psi.
2. Pulled tubing.
3. Reperforated in the Nugget formation from 13,008'-13032', 13032'-13038' and 13046'-13064' and 13092'-13115' using 4 JSPF.
4. Ran new 2 7/8" tubing string.
5. RTP. Workover completed 7/18/92 w/ 13.8 MMCFD, 5.1 BWPD, and 331.9 BWPD.

If you require additional information, please contact Raelene Krcil at (303) 830-5399.

18. I hereby certify that the foregoing is true and correct

SIGNED: Raelene K. Krcil TITLE: Permitting Representative DATE: 07/24/92

(This space for Federal or State office use)

APPROVED BY _____ TITLE _____ DATE _____

CONDITIONS OF APPROVAL, IF ANY:

*See Instructions on Reverse Side

Division of Oil, Gas and Mining

OPERATOR CHANGE WORKSHEET

Routing:	
1-LEC ✓	6-LEC ✓
2-GLH ✓	7-KAS ✓
~~3-DTS~~ ✓	8-SJ ✓
4-VLD ✓	9-FILE ✓
5-JRB ✓	

Attach all documentation received by the division regarding this change.
Initial each listed item when completed. Write N/A if item is not applicable.

XXX ☐ Change of Operator (~~well sold~~) ☐ Designation of Agent
☐ Designation of Operator ☐ Operator Name Change Only

The operator of the well(s) listed below has changed, **effective:** 1-31-95

TO: (new operator) AMOCO PRODUCTION COMPANY
(address) PO BOX 800
DENVER CO 80201
Phone: (303)830-5340
Account no. N0050

FROM: (old operator) AMOCO ROCMOUNT COMPANY
(address) PO BOX 800
DENVER CO 80201
ED HADLOCK
Phone: (303)830-5340
Account no. N1390

WELL(S) attach additional page if needed: *ANSCHUTZ RANCH EAST UNIT

Name:	API:	Entity:	S	T	R	Lease:
SEE ATTACHED	43-043-30159					

OPERATOR CHANGE DOCUMENTATION

Lec 1. (r649-8-10) Sundry or other legal documentation has been received from the **FORMER** operator (attach to this form). (Req. 2-19-98) (Rec'd 2-26-98)

Lec 2. (r649-8-10) Sundry or other legal documentation has been received from the **NEW** operator (Attach to this form). (Rec'd 2-11-98)

N/A 3. The **Department of Commerce** has been contacted if the new operator above is not currently operating any wells in Utah. Is the company **registered with the state?** (yes/no) _____ If yes, show company file number: _____.

N/A 4. **FOR INDIAN AND FEDERAL WELLS ONLY.** The BLM has been contacted regarding this change. Make note of BLM status in comments section of this form. BLM approval of **Federal** and **Indian** well operator changes should ordinarily take place prior to the division's approval, and before the completion of **steps 5 through 9** below.

Lec 5. Changes have been entered in the **Oil and Gas Information System** (3270) for each well listed above. (2-26-98) X QuattroPro/UIC "No Chg." , DBASE/UIC "No Chg." (See comments)

Lec 6. **Cardex** file has been updated for each well listed above. (2-26-98)

Lec 7. Well **file labels** have been updated for each well listed above. (2-26-98)

Lec 8. Changes have been included on the monthly "Operator, Address, and Account Changes" **memo** for distribution to Trust Lands, Sovereign Lands, UGS, Tax Commission, etc. (2-26-98)

Lec 9. A folder has been set up for the **Operator Change file**, and a copy of this page has been placed there for reference during routing and processing of the original documents.

c:\dons\wpdocs\forms\operchng

- OVER -

OPERATOR CHANGE WORKSHEET (continued) - Initial each item when completed. Write N/A if item is not applicable.

ENTITY REVIEW

Lec 1. (r649-8-7) **Entity assignments have been reviewed** for all wells listed above. Were entity changes made? (yes/no) ____ If entity assignments were changed, attach copies of Form 6, Entity Action Form.
4540 "Unit Entity"

N/A 2. Trust Lands, Sovereign Lands, Tax Commission, etc., have been **notified** through normal procedures of entity changes.

BOND VERIFICATION - (FEE WELLS ONLY)

Surety No. 831094 (80,000) Issued by Seaboard Surety Co. in behalf of Amoco Prod. Co. and Amoco Rocmount Co.

Lec 1. (r649-3-1) The **NEW** operator of any fee lease well listed above has furnished a proper bond.

Lec 2. A **copy of this form** has been placed in the new and former operator's bond files.

Lec 3. The **FORMER** operator has requested a release of liability from their bond (yes/no) ____, as of today's date 2-19-98. If yes, division response was made to this request by letter dated _____.

LEASE INTEREST OWNER NOTIFICATION OF RESPONSIBILITY

N/A/Lec 1. Copies of documents have been sent on _____ to _____ at Trust Lands for changes involving State leases, in order to remind that agency of their responsibility to review for proper bonding.

Lec 2. (r649-2-10) The former operator of any fee lease wells listed above has been contacted and informed by letter dated Feb. 26, 1998, of their responsibility to notify all interest owners of this change.

FILMING

VB 1. All attachments to this form have been **microfilmed**. Today's date: 3.20.98.

FILING

CHD 1. **Copies** of all attachments to this form have been filed in each **well file**.

__ 2. The **original of this form**, and the **original attachments** are now being filed in the Operator Change file.

COMMENTS

980219 Recognized oper. for Anschutz Ranch East Unit (State Unit) already Amoco Production Co.

* UIC Wells (Disposal & Gas Injection) were never changed to Amoco Rocmount Company, no change necessary! They were changed in 3270 and have now been changed back to Amoco Prod. Co.

FORM 9

STATE OF UTAH

DIVISION OF OIL, GAS AND MINING

APR - 8 1996

SUNDRY NOTICES AND REPORTS ON WELLS

Do not use this form for proposals to drill new wells, deepen existing wells, or to reenter plugged and abandoned wells.
Use APPLICATION FOR PERMIT TO DRILL OR DEEPEN form for such proposals.

5. Lease Designation and Serial Number: FEE

6. If Indian, Allottee or Tribe Name:

7. Unit Agreement Name: Anschutz Ranch East

8. Well Name and Number: ARE W20-06

9. API Well Number: 43-043-30159

10. Field and Pool, or Wildcat: ARE- Nugget

1. Type of Well: OIL ☐ GAS ☒ OTHER:

2. Name of Operator: Amoco Production Company

3. Address and Telephone Number: P.O. Box 800 Room 1720A Denver, CO 80201 (303) 830-5399

4. Location of Well

Footages: 1291' FNL x 936' FWL

QQ, Sec.,T.,R.,M.: m Sec 20 T4N-R8E

County: Summit

State: Utah

11. CHECK APPROPRIATE BOXES TO INDICATE NATURE OF NOTICE, REPORT, OR OTHER DATA

NOTICE OF INTENT
(Submit in Duplicate)

- ☐ Abandonment
- ☐ Casing Repair
- ☐ Change of Plans
- ☐ Conversion to Injection
- ☒ Fracture Treat
- ☐ Multiple Completion
- ☐ Other
- ☐ New Construction
- ☐ Pull or Alter Casing
- ☐ Recompletion
- ☐ Shoot or Acidize
- ☐ Vent or Flare
- ☐ Water Shut-Off

Approximate date work will start

SUBSEQUENT REPORT
(Submit Original Form Only)

- ☐ Abandonment *
- ☐ Casing Repair
- ☐ Change of Plans
- ☐ Conversion to Injection
- ☐ Fracture Treat
- ☐ Other
- ☐ New Construction
- ☐ Pull or Alter Casing
- ☒ Shoot or Acidize
- ☐ Vent or Flare
- ☐ Water Shut-Off

Date of work completion

Report results of **Multiple Completions** and **Recompletions** to different reservoirs on WELL COMPLETION OR RECOMPLETION AND LOG form.

* Must be accompanied by a cement verification report.

12. DESCRIBE PROPOSED OR COMPLETED OPERATIONS (Clearly state all pertinent details, and give pertinent dates. If well is directionally drilled, give subsurface locations and measured and true vertical depths for all markers and zones pertinent to this work.)

Amoco Production Company perforated additional pay in the Nugget formation by performing the following:

1. Perforated 20' of Nugget formation from 13,680'-13,700' using 4 JSPF .29".
2. Perforated 80' of additional pay from 13,230'-13,250', 13,250'-13,270', 13,270'-13,290', 13,290'-13,310' using 4 JSPF .29".
3. RTP on 3/25/96.

If you require additional information, please contact Felicia Yuen (Project Engineer) @ (303) 830-4859 or Raelene Krcil @ (303) 830-5399.

13.

Name & Signature: Raelene K. Krcil Raelene Krcil Title: Regulatory Analyst Date: 4/2/96

(This space for State use only)

WO fax credit review - 6/97, 10/97

(1\93)

(See Instructions on Reverse Side)

FORM 10

STATE OF UTAH
DIVISION OF OIL, GAS AND MINING
1594 West North Temple, Suite 1210, PO Box 145801, Salt Lake City, UT 84114-5801

MONTHLY OIL AND GAS PRODUCTION REPORT

OPERATOR NAME AND ADDRESS:

DEMETRIA MARTINEZ
AMOCO ROCMOUNT COMPANY
PO BOX 800
DENVER CO 80201

UTAH ACCOUNT NUMBER: N1390

REPORT PERIOD (MONTH/YEAR): 12 / 97

AMENDED REPORT ☐ **(Highlight Changes)**

Well Name API Number Entity Location	Producing Zone	Well Status	Days Oper	Production Volumes OIL(BBL)	GAS(MCF)	WATER(BBL)
ANSCHUTZ RANCH EAST W20-08 4304330123 04540 04N 08E 20	NGSD			Fee	Anschutz Ranch	East Unit
ANSCHUTZ RANCH EAST 29-04ST1 4304330129 04540 04N 08E 29	NGSD			"		
ANSCHUTZ RANCH EAST E21-14 4304330130 04540 04N 08E 21	TWNCR			"		
ANSCHUTZ RANCH EAST W21-04 4304330135 04540 04N 08E 21	NGSD			"		
ANSCHUTZ RANCH EAST W29-02 4304330136 04540 04N 08E 29	NGSD			"		
ANSCHUTZ RANCH EAST W16-06 4304330138 04540 04N 08E 16	NGSD			"		
ANSCHUTZ RANCH EAST W20-16 4304330148 04540 04N 08E 20	NGSD			"		
ANSCHUTZ RANCH EAST W30-16 4304330156 04540 04N 08E 30	NGSD			"		
ANSCHUTZ RANCH EAST W36-16 4304330157 04540 04N 07E 36	NGSD			"		
ANSCHUTZ RANCH EAST W20-06 4304330159 04540 04N 08E 20	NGSD			"		
ANSCHUTZ RANCH EAST W32-04 4304330162 04540 04N 08E 32	NGSD			"		
ANSCHUTZ RANCH EAST W31-08 4304330164 04540 04N 08E 31	NGSD			"		
ANSCHUTZ RANCH EAST W31-04 4304330165 04540 04N 08E 31	NGSD			"		
			TOTALS			

COMMENTS:

I hereby certify that this report is true and complete to the best of my knowledge. Date:

Name and Signature: Telephone Number:

FORM 9

STATE OF UTAH

DIVISION OF OIL, GAS AND MINING

SUNDRY NOTICES AND REPORTS ON WELLS

Do not use this form for proposals to drill new wells, deepen existing wells, or to reenter plugged and abandoned wells. Use APPLICATION FOR PERMIT TO DRILL OR DEEPEN form for such proposals.

5. Lease Designation and Serial Number:

6. If Indian, Allottee or Tribe Name: Anschutz Ranch East

7. Unit Agreement Name: W20-06

8. Well Name and Number:

9. API Well Number: 43-043-30159

10. Field and Pool, or Wildcat: Nugget

1. Type of Well: OIL ☐ GAS ☒ OTHER:

2. Name of Operator: Amoco Production Company

3. Address and Telephone Number: P.O. Box 800, Rm 812B, Denver, CO 80201 (303) 830-4781

4. Location of Well

Footages: 936' FWL, 1291' FNL

County: Summit

QQ, Sec.,T.,R.,M.: Sec 20, T4N, R8E

State: Utah

11. CHECK APPROPRIATE BOXES TO INDICATE NATURE OF NOTICE, REPORT, OR OTHER DATA

NOTICE OF INTENT (Submit in Duplicate)

- ☐ Abandonment
- ☐ Casing Repair
- ☐ Change of Plans
- ☐ Conversion to Injection
- ☐ Fracture Treat
- ☐ Multiple Completion
- ☐ Other
- ☐ New Construction
- ☐ Pull or Alter Casing
- ☐ Recompletion
- ☐ Shoot or Acidize
- ☐ Vent or Flare
- ☐ Water Shut-Off

Approximate date work will start _____

SUBSEQUENT REPORT (Submit Original Form Only)

- ☐ Abandonment *
- ☐ Casing Repair
- ☐ Change of Plans
- ☐ Conversion to Injection
- ☐ Fracture Treat
- ☐ Other
- ☐ New Construction
- ☐ Pull or Alter Casing
- ☐ Shoot or Acidize
- ☐ Vent or Flare
- ☐ Water Shut-Off

Date of work completion _____

Report results of **Multiple Completions** and **Recompletions** to different reservoirs on WELL COMPLETION OR RECOMPLETION AND LOG form.

* Must be accompanied by a cement verification report.

DESCRIBE PROPOSED OR COMPLETED OPERATIONS (Clearly state all pertinent details, and give pertinent dates. If well is directionally drilled, give subsurface locations and measured and true vertical depths for all markers and zones pertinent to this work.)

Amoco Production Company is now the operator of the above mentioned well. We will be operating under Utah Bond # 831094. This is effective 1/31/95.

If you require additional information, please contact Gigi Martinez @ (303) 830-4781.

RECEIVED FEB 1 1998 DIV. OF OIL, GAS & MINING

Name & Signature: G. G. Martinez Title: Permit Agent Date: 2/5/98

(This space for State use only)

State of Delaware

Office of the Secretary of State

I, EDWARD J. FREEL, SECRETARY OF STATE OF THE STATE OF DELAWARE, DO HEREBY CERTIFY THE ATTACHED IS A TRUE AND CORRECT COPY OF THE CERTIFICATE OF DISSOLUTION OF "AMOCO ROCMOUNT COMPANY", FILED IN THIS OFFICE ON THE THIRTY-FIRST DAY OF JANUARY, A.D. 1995, AT 10 O'CLOCK A.M.

A CERTIFIED COPY OF THIS CERTIFICATE HAS BEEN FORWARDED TO THE NEW CASTLE COUNTY RECORDER OF DEEDS FOR RECORDING.

Change of operator. Amoco Rocmount to Amoco Production Co Effective 1/31/95

Edward J. Freel

Edward J. Freel, Secretary of State

0934277 8100

950022938

AUTHENTICATION: 7391913

DATE: 01-31-95

ATTN: Lisha Cordova
801-359-3904

4 pages

Ed Hadlock
Amoco Prod. Co
303-830-4993

CERTIFICATE OF DISSOLUTION

OF

AMOCO ROCMOUNT COMPANY

AMOCO ROCMOUNT COMPANY, a corporation organized and existing under and by virtue of the General Corporation Law of the State of Delaware,

DOES HEREBY CERTIFY:

FIRST: That dissolution was authorized on January 19, 1995.

SECOND: That dissolution has been authorized by the unanimous written consent of all of the stockholders of the corporation entitled to vote on a dissolution in accordance with the provisions of subsection (c) of section 275 of the General Corporation Law of the State of Delaware.

THIRD: That the names and addresses of the directors and officers of AMOCO ROCMOUNT COMPANY are as follows:

DIRECTORS

NAMES	ADDRESSES
J. M. Brown	501 WestLake Park Boulevard Houston, TX 77079
J. M. Gross	501 WestLake Park Boulevard Houston, TX 77079
D. H. Welch	200 East Randolph Drive Chicago, IL 60601

OFFICERS

NAMES	OFFICES	ADDRESS
J. M. Brown	President	501 WestLake Park Blvd. Houston, TX 77079
M. R. Gile	Vice President	1670 Broadway Denver, CO 80202
J. N. Jaggers	Vice President	1670 Broadway Denver, CO 80202

NAMES	OFFICES	ADDRESS
D. H. Welch	Vice President	200 East Randolph Drive Chicago, IL 60601
J. M. Gross	Secretary	501 WestLake Park Blvd. Houston, TX 77079
R. B. Wilson	Assistant Secretary	1670 Broadway Denver, CO 80202
Rebecca Gormezano	Assistant Secretary	200 East Randolph Drive Chicago, IL 60601
C. F. Helm	Assistant Secretary	519 S. Boston Tulsa, OK 74103
A. L. Haws	Assistant Secretary	501 WestLake Park Blvd. Houston, TX 77079
Daniel B. Pinkert	Assistant Secretary	200 East Randolph Drive Chicago, IL 60601
G. L. Paulson	Assistant Secretary	1670 Broadway Denver, CO 80202
J. E. Rutter	Assistant Secretary	501 WestLake Park Blvd. Houston, TX 77079
J. L. Siddall	Assistant Secretary	200 East Randolph Drive Chicago, IL 60601
M. J. Stonecipher	Assistant Secretary	519 S. Boston Tulsa, OK 74103
Rebecca S. McGee	Assistant Secretary	1670 Broadway Denver, CO 80202
Gerald M. Wilson	Assistant Secretary	200 East Randolph Drive Chicago, IL 60601
Marsha Williams	Treasurer	200 East Randolph Drive Chicago, IL 60601

IN WITNESS WHEREOF, said AMOCO ROCMOUNT COMPANY has caused this certificate to be signed by M. R. Gile, its Vice President, and attested by Rebecca S. McGee, its Assistant Secretary, this 26th day of January, 1995.

AMOCO ROCMOUNT COMPANY

ATTEST:

By _____
M. R. Gile, Vice President

By Rebecca S. McGee
Assistant Secretary

STATE OF COLORADO)
) ss.
CITY OF DENVER)

I, Sheryl A. White, a Notary Public, do hereby certify that M. R. GILE and Robert S. McGee of the above named AMOCO ROCMOUNT COMPANY, personally known to me to be the same persons whose names are subscribed to the foregoing instrument as Vice President and Assistant Secretary, respectively, appeared before me this day in person, and acknowledged that they signed, sealed and delivered the said instrument as the free and voluntary act of said AMOCO ROCMOUNT COMPANY, and as their own free and voluntary act as Vice President and Assistant Secretary, respectively, for the uses and purposes therein set forth.

GIVEN under my hand and official seal this 26th day of January, 1995.

Sheryl A. White
Notary Public

ANSCHUTZ RANCH EAST UNIT

Summit County, Utah

EFFECTIVE: DECEMBER 2, 1982

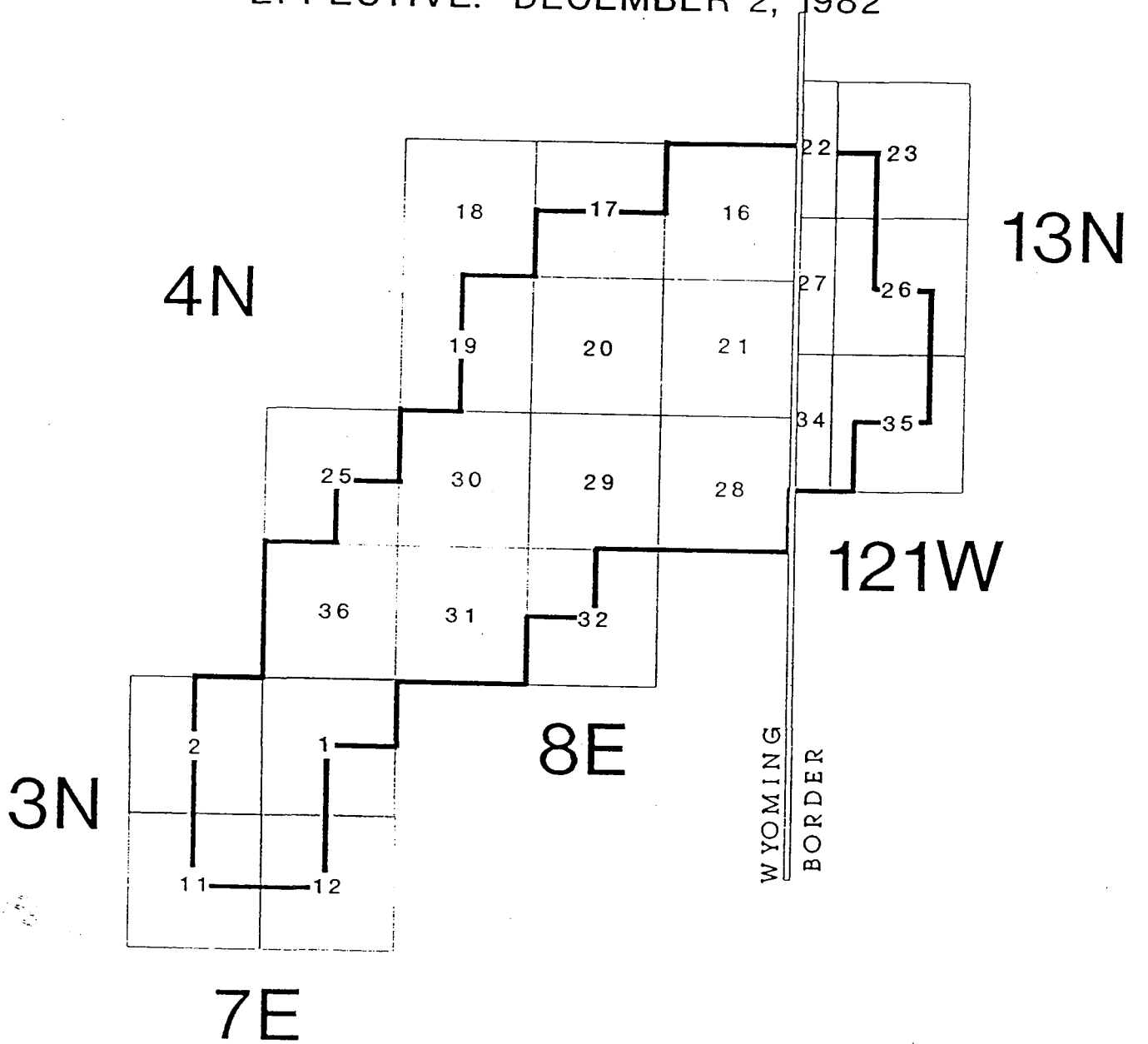

UNIT OUTLINE (UTU67938X)

AS CONTRACTED DECEMBER 1, 1992

22,158.00 ACRES

State of Utah
DEPARTMENT OF NATURAL RESOURCES
DIVISION OF OIL, GAS AND MINING

Michael O. Leavitt
Governor
Ted Stewart
Executive Director
Lowell P. Braxton
Division Director

1594 West North Temple, Suite 1210
PO Box 145801
Salt Lake City, Utah 84114-5801
801-538-5340
801-359-3940 (Fax)
801-538-7223 (TDD)

February 26, 1998

G. G. Martinez
Amoco Production Company
P. O. Box 800, Room 812B
Denver, Colorado 80201

Re: Notification of Sale or Transfer of Fee Lease Interest

The Division has received notification of a change of operator from Amoco Rocmount Company to Amoco Production Company for the following wells which are located on fee leases:

Well Name	Sec.-T.-R.	API Number
(Anschutz Ranch East "ARE")		
ARE W20-08	20-04N-08E	43-043-30123
ARE 29-04ST1	29-04N-08E	43-043-30129
ARE E21-14	21-04N-08E	43-043-30130
ARE W21-04	21-04N-08E	43-043-30135
ARE W29-02	29-04N-08E	43-043-30136
ARE W16-06	16-04N-08E	43-043-30138
ARE W20-16	20-04N-08E	43-043-30148
ARE W30-16	30-04N-08E	43-043-30156
ARE W36-16	36-04N-07E	43-043-30157
ARE W20-06	20-04N-08E	43-043-30159
ARE W32-04	32-04N-08E	43-043-30162
ARE W31-08	31-04N-08E	43-043-30164
ARE W31-04	31-04N-08E	43-043-30165
ARE W17-16	17-04N-08E	43-043-30176
ARE W30-08	30-04N-08E	43-043-30183
ARE W30-14	30-04N-08E	43-043-30185
ARE W01-06	01-03N-07E	43-043-30188
ARE W31-12	31-04N-08E	43-043-30190
ARE W19-16	19-04N-08E	43-043-30204
ARE W30-10	30-04N-08E	43-043-30215
ARE W31-06	31-04N-08E	43-043-30217

ARE W20-12	20-04N-08E	43-043-30220
ARE E28-06	28-04N-08E	43-043-30226
ARE W36-10	36-04N-07E	43-043-30227
ARE W20-02	20-04N-08E	43-043-30228
ARE W20-10	20-04N-08E	43-043-30229
ARE W16-12	16-04N-08E	43-043-30231
ARE W20-04	20-04N-08E	43-043-30238
ARE W29-06A	29-04N-08E	43-043-30250
ARE W29-14A	29-04N-08E	43-043-30251
ARE E28-12	28-04N-08E	43-043-30257
ARE W01-04	01-03N-07E	43-043-30270
ARE W01-12	01-03N-07E	43-043-30271
ARE W30-06	30-04N-08E	43-043-30273
ARE W11-1	11-03N-07E	43-043-30277
ARE W30-13	25-04N-07E	43-043-30279
ARE W12-04	02-03N-07E	43-043-30283
ARE W20-09	20-04N-08E	43-043-30286
ARE W20-03	20-04N-08E	43-043-30291

Utah Administrative Rule R649-2-10 states; the owner of a lease shall provide notification to any person with an interest in such lease, when all or part of that interest in the lease is sold or transferred.

This letter is written to advise Amoco Production Company of its responsibility to notify all individuals with an interest in these leases (royalty interest and working interest) of the change of operator. Please provide written documentation of this notification to:

Utah Royalty Owners Association
Box 1292
Roosevelt, Utah 84066

Your assistance in this matter is appreciated.

Sincerely,

Lisha Cordova

Lisha Cordova
Admin. Analyst, Oil & Gas

cc: Amoco Rocmount Company, Ed Hadlock
Utah Royalty Owners Association, Stephen Evans
John R. Baza, Associate Director
Operator File(s)

STATE OF UTAH
DEPARTMENT OF NATURAL RESOURCES
DIVISION OF OIL, GAS AND MINING

FORM 9

SUNDRY NOTICES AND REPORTS ON WELLS

Do not use this form for proposals to drill new wells, significantly deepen existing wells below current bottom-hole depth, reenter plugged wells, or to drill horizontal laterals. Use APPLICATION FOR PERMIT TO DRILL form for such proposals.

5. LEASE DESIGNATION AND SERIAL NUMBER:

6. IF INDIAN, ALLOTTEE OR TRIBE NAME:

7. UNIT or CA AGREEMENT NAME: See Attached

1. TYPE OF WELL: OIL WELL ☐ GAS WELL ☐ OTHER See Attached

8. WELL NAME and NUMBER: See Attached

2. NAME OF OPERATOR: Amoco Production Company

9. API NUMBER: Attached

3. ADDRESS OF OPERATOR: 501 Westlake Park Blvd CITY Houston STATE TX ZIP 77079

PHONE NUMBER: (281) 366-5328

10. FIELD AND POOL, OR WILDCAT: See Attached

4. LOCATION OF WELL

FOOTAGES AT SURFACE: See Attached

COUNTY: See Attached

QTR/QTR, SECTION, TOWNSHIP, RANGE, MERIDIAN:

STATE: UTAH

11. CHECK APPROPRIATE BOXES TO INDICATE NATURE OF NOTICE, REPORT, OR OTHER DATA

TYPE OF SUBMISSION	TYPE OF ACTION		
☑ NOTICE OF INTENT (Submit in Duplicate)	☐ ACIDIZE	☐ DEEPEN	☐ REPERFORATE CURRENT FORMATION
Approximate date work will start:	☐ ALTER CASING	☐ FRACTURE TREAT	☐ SIDETRACK TO REPAIR WELL
	☐ CASING REPAIR	☐ NEW CONSTRUCTION	☐ TEMPORARILY ABANDON
	☐ CHANGE TO PREVIOUS PLANS	☐ OPERATOR CHANGE	☐ TUBING REPAIR
	☐ CHANGE TUBING	☐ PLUG AND ABANDON	☐ VENT OR FLARE
☐ SUBSEQUENT REPORT (Submit Original Form Only)	☐ CHANGE WELL NAME	☐ PLUG BACK	☐ WATER DISPOSAL
Date of work completion:	☐ CHANGE WELL STATUS	☐ PRODUCTION (START/RESUME)	☐ WATER SHUT-OFF
	☐ COMMINGLE PRODUCING FORMATIONS	☐ RECLAMATION OF WELL SITE	☑ OTHER: Operator Name Change
	☐ CONVERT WELL TYPE	☐ RECOMPLETE - DIFFERENT FORMATION	

12. DESCRIBE PROPOSED OR COMPLETED OPERATIONS. Clearly show all pertinent details including dates, depths, volumes, etc.

Amoco Production Company proposes to change its name to BP America Production Company, effective December 31, 2001. Mailing addresses and designated agents shall remain the same.

Attached to this sundry is a listing of wells currently operated by Amoco Production Company. This list includes all wells with the exception of those wells which have a plugged or D&A status.

Also attached for the Board's file is a copy of the Board Resolution approving the name change.

NAME (PLEASE PRINT) Alan Wood

TITLE Regulatory Engineer

SIGNATURE

DATE 12/11/2001

(This space for State use only)

RECEIVED

DEC 13 2001

DIVISION OF
OIL, GAS AND MINING

(5/2000)

(See Instructions on Reverse Side)

UNITED STATES OF AMERICA §
STATE OF TEXAS §
COUNTY OF HARRIS §
CITY OF HOUSTON §

CERTIFICATE

M. S. Haskins, of lawful age, first being duly sworn on oath, deposes and says:

1. That she is the duly elected, qualified and acting Assistant Secretary of Amoco Production Company, a corporation organized and existing under the laws of the State of Delaware, U.S.A.;

2. That on November 12, 2001, by consent action of the Board of Directors of Amoco Production Company (hereinafter referred to as "Company"), the following resolutions were adopted:

> WHEREAS, in connection with BP America Inc.'s ("BP") integration of Atlantic Richfield Company ("ARCO") and Vastar Resources, Inc. ("Vastar"), BP has elected to reorganize, consolidate and merge its upstream onshore Lower 48 assets into a single legal entity to align BP's legal structure with its business organization and to improve operating efficiencies; and
>
> WHEREAS, BP desires Amoco Production Company ("Company") to be such single legal entity for the purposes of such reorganization, consolidation and merger; and
>
> WHEREAS such reorganization, consolidation and merger shall be accomplished by December 31, 2001 pursuant to a Reorganization Agreement ("Agreement") by and between ARCO and BP Company North America Inc. ("BP Company NA"), the parent of Company, resulting in ARCO's upstream onshore Lower 48 assets being transferred to Company and Vastar being merged into Company; and
>
> WHEREAS, pursuant to such Agreement, asset, stock and liability transfers will occur in consideration for Class B common stock of BP Company NA and Company's agreement to assume all obligations and indemnify ARCO for all past and future liabilities relating to such transfers; and
>
> WHEREAS, in connection with such reorganization, Company desires to change its name to BP America Production Company, effective December 31, 2001 with corporate seal as follows; and

WHEREAS all officers and directors of Company will remain unchanged.

NOW, THEREFORE, BE IT,

RESOLVED, Company will accept asset, stock and liability transfers effective December 31, 2001 pursuant to the Agreement and will assume all obligations and indemnify ARCO for all past or future liabilities relating to such transfers.

FURTHER RESOLVED, Company will change its name and corporate seal to BP America Production Company, effective December 31, 2001 and all officers and directors will remain unchanged.

3. That the aforesaid resolutions have not been amended, rescinded, or annulled, but remain in full force and effect on the date hereof.

EXECUTED in the City of Houston, State of Texas, on this the 13 day of November, 2001.

[Corporate Seal]

M. S. Haskins

SUBSCRIBED and sworn to before me this 13 day of November, 2001.

(Notary Seal)

DENISE ROBERTSON
Notary Public, State of Texas
My Commission Expires
October 12, 2004

NOTARY PUBLIC, STATE OF TEXAS

API Well Number	Operator	Well Name	Well Type	Well Status	Field Name	Sec	Twp-Rng
43-043-30096-00-00	AMOCO PRODUCTION CO	ANSCHUTZ RANCH EAST W16-14	Gas Well	Shut_In	ANSCHUTZ RANCH EAST	16	4N-8E
43-043-30106-00-00	AMOCO PRODUCTION CO	ANSCHUTZ RANCH EAST 34-2	SWD	Active Well	ANSCHUTZ RANCH EAST	34	4N-7E
43-043-30123-00-00	AMOCO PRODUCTION CO	ARE W20-08	Gas Well	Producing Well	ANSCHUTZ RANCH EAST	20	4N-8E
43-043-30129-00-00	AMOCO PRODUCTION CO	ARE 29-04ST1	Gas Well	Producing Well	ANSCHUTZ RANCH EAST	29	4N-8E
43-043-30130-00-00	AMOCO PRODUCTION CO	ANSCHUTZ RANCH EAST E21-14	Gas Well	Shut_In	ANSCHUTZ RANCH EAST	21	4N-8E
43-043-30135-00-00	AMOCO PRODUCTION CO	ANSCHUTZ RANCH EAST W21-04	Gas Well	Shut_In	ANSCHUTZ RANCH EAST	21	4N-8E
43-043-30136-00-00	AMOCO PRODUCTION CO	ARE W29-02	Gas Well	Producing Well	ANSCHUTZ RANCH EAST	29	4N-8E
43-043-30138-00-00	AMOCO PRODUCTION CO	ANSCHUTZ RANCH EAST W16-06	Gas Well	Shut_In	ANSCHUTZ RANCH EAST	16	4N-8E
43-043-30139-00-00	AMOCO PRODUCTION CO	ISLAND RANCHING C-1	SWD	Active Well	ANSCHUTZ RANCH EAST	26	4N-7E
43-043-30143-00-00	AMOCO PRODUCTION CO	CHAMPLIN 372 AMOCO C 1	Gas Well	Producing Well	ANSCHUTZ RANCH EAST	23	4N-7E
43-043-30145-00-00	AMOCO PRODUCTION CO	ARE W20-14	Gas Well	Producing Well	ANSCHUTZ RANCH EAST	20	4N-8E
43-043-30148-00-00	AMOCO PRODUCTION CO	ARE W20-16	Gas Well	Producing Well	ANSCHUTZ RANCH EAST	20	4N-8E
43-043-30154-00-00	AMOCO PRODUCTION CO	ARE W29-12	Gas Well	Producing Well	ANSCHUTZ RANCH EAST	29	4N-8E
43-043-30156-00-00	AMOCO PRODUCTION CO	ARE W30-16	Gas Well	Producing Well	ANSCHUTZ RANCH EAST	30	4N-8E
43-043-30157-00-00	AMOCO PRODUCTION CO	ARE W36-16	Gas Well	Producing Well	ANSCHUTZ RANCH EAST	36	4N-7E
43-043-30159-00-00	AMOCO PRODUCTION CO	ANSCHUTZ RANCH EAST W20-06	Gas Well	Shut_In	ANSCHUTZ RANCH EAST	20	4N-8E
43-043-30161-00-00	AMOCO PRODUCTION CO	ISLAND RANCHING D-1	Gas Well	Shut_In	**WEBER FORMATION**	14	4N-7E
43-043-30162-00-00	AMOCO PRODUCTION CO	ARE W32-04	Gas Well	Producing Well	ANSCHUTZ RANCH EAST	32	4N-8E
43-043-30164-00-00	AMOCO PRODUCTION CO	ARE W31-08	Gas Well	Producing Well	ANSCHUTZ RANCH EAST	31	4N-8E
43-043-30165-00-00	AMOCO PRODUCTION CO	ANSCHUTZ RANCH EAST W31-04 E	Gas Well	Shut_In	ANSCHUTZ RANCH EAST	31	4N-8E
43-043-30167-00-00	AMOCO PRODUCTION CO	ARE W36-08	Gas Well	Producing Well	ANSCHUTZ RANCH EAST	36	4N-7E
43-043-30168-00-00	AMOCO PRODUCTION CO	CHAMPLIN 387 B1A	Gas Well	Shut_In	ANSCHUTZ RANCH EAST	9	3N-7E
43-043-30170-00-00	AMOCO PRODUCTION CO	CHAMPLIN 372 D-1	Gas Well	Producing Well	ANSCHUTZ RANCH EAST	23	4N-7E
43-043-30176-00-00	AMOCO PRODUCTION CO	ANSCHUTZ RANCH EAST W17-16	Gas Well	Shut_In	ANSCHUTZ RANCH EAST	17	4N-8E
43-043-30183-00-00	AMOCO PRODUCTION CO	ARE W30-08	Gas Well	Producing Well	ANSCHUTZ RANCH EAST	30	4N-8E
43-043-30185-00-00	AMOCO PRODUCTION CO	ANSCHUTZ RANCH EAST W30-14	Gas Well	Producing Well	ANSCHUTZ RANCH EAST	30	4N-8E
43-043-30188-00-00	AMOCO PRODUCTION CO	ARE W01-06	Gas Well	Producing Well	ANSCHUTZ RANCH EAST	1	3N-7E
43-043-30190-00-00	AMOCO PRODUCTION CO	ANSCHUTZ RANCH EAST W31-12	Gas Well	Shut_In	ANSCHUTZ RANCH EAST	31	4N-8E
43-043-30204-00-00	AMOCO PRODUCTION CO	ANSCHUTZ RANCH EAST W19-16	Gas Well	Shut_In	ANSCHUTZ RANCH EAST	19	4N-8E
43-043-30209-00-00	AMOCO PRODUCTION CO	ARE W1-02	Gas Well	Producing Well	ANSCHUTZ RANCH EAST	1	3N-7E
43-043-30215-00-00	AMOCO PRODUCTION CO	ARE W30-10	Gas Well	Producing Well	ANSCHUTZ RANCH EAST	30	4N-8E
43-043-30216-00-00	AMOCO PRODUCTION CO	ARE W30-15	Gas Well	Producing Well	ANSCHUTZ RANCH EAST	30	4N-8E
43-043-30217-00-00	AMOCO PRODUCTION CO	ARE W31-06	Gas Well	Producing Well	ANSCHUTZ RANCH EAST	31	4N-8E
43-043-30218-00-00	AMOCO PRODUCTION CO	ARE W30-02	Gas Well	Producing Well	ANSCHUTZ RANCH EAST	30	4N-8E

API Well Number	Operator	Well Name	Well Type	Well Status	Field Name	Sec	Twp-Rng
43-043-30220-00-00	AMOCO PRODUCTION CO	ANSCHUTZ RANCH EAST W20-12	Gas Well	Shut_In	ANSCHUTZ RANCH EAST	20	4N-8E
43-043-30226-00-00	AMOCO PRODUCTION CO	ARE E28-06	Gas Well	Producing Well	ANSCHUTZ RANCH EAST	28	4N-8E
43-043-30227-00-00	AMOCO PRODUCTION CO	ANSCHUTZ RANCH EAST W36-10	Gas Well	Producing Well	ANSCHUTZ RANCH EAST	36	4N-7E
43-043-30228-00-00	AMOCO PRODUCTION CO	ANSCHUTZ RANCH EAST W20-02	Gas Well	Shut_In	ANSCHUTZ RANCH EAST	20	4N-8E
43-043-30229-00-00	AMOCO PRODUCTION CO	ANSCHUTZ RANCH EAST W20-10	Gas Well	Producing Well	ANSCHUTZ RANCH EAST	20	4N-8E
43-043-30231-00-00	AMOCO PRODUCTION CO	ANSCHUTZ RANCH EAST W16-12	Gas Well	Shut_In	ANSCHUTZ RANCH EAST	16	4N-8E
43-043-30238-00-00	AMOCO PRODUCTION CO	ANSCHUTZ RANCH EAST W20-04	Gas Well	Shut_In	ANSCHUTZ RANCH EAST	20	4N-8E
43-043-30248-00-00	AMOCO PRODUCTION CO	ANSCHUTZ RANCH EAST W30-12A	GIW	Active Well	ANSCHUTZ RANCH EAST	30	4N-8E
43-043-30250-00-00	AMOCO PRODUCTION CO	ANSCHUTZ RANCH EAST W29-06A	Gas Well	Producing Well	ANSCHUTZ RANCH EAST	29	4N-8E
43-043-30251-00-00	AMOCO PRODUCTION CO	ANSCHUTZ RANCH EAST W29-14A	Gas Well	Producing Well	ANSCHUTZ RANCH EAST	29	4N-8E
43-043-30255-00-00	AMOCO PRODUCTION CO	ANSCHUTZ RANCH EAST W36-14	Gas Well	Shut_In	ANSCHUTZ RANCH EAST	36	4N-7E
43-043-30257-00-00	AMOCO PRODUCTION CO	ANSCHUTZ RANCH EAST E28-12	Gas Well	Producing Well	ANSCHUTZ RANCH EAST	28	4N-8E
43-043-30265-00-00	AMOCO PRODUCTION CO	ANSCHUTZ RANCH EAST W2-10	GIW	Active Well	ANSCHUTZ RANCH EAST	2	3N-7E
43-043-30270-00-00	AMOCO PRODUCTION CO	ANSCHUTZ RANCH EAST W01-04	Gas Well	Shut_In	ANSCHUTZ RANCH EAST	1	3N-7E
43-043-30271-00-00	AMOCO PRODUCTION CO	ANSCHUTZ RANCH EAST W01-12	Gas Well	Shut_In	ANSCHUTZ RANCH EAST	1	3N-7E
43-043-30272-00-00	AMOCO PRODUCTION CO	ANSCHUTZ RANCH EAST W19-08	GIW	Active Well	ANSCHUTZ RANCH EAST	19	4N-8E
43-043-30273-00-00	AMOCO PRODUCTION CO	ANSCHUTZ RANCH EAST W30-06	Gas Well	Shut_In	ANSCHUTZ RANCH EAST	30	4N-8E
43-043-30277-00-00	AMOCO PRODUCTION CO	ANSCHUTZ RANCH EAST W11-1	Gas Well	Shut_In	ANSCHUTZ RANCH EAST	11	3N-7E
43-043-30279-00-00	AMOCO PRODUCTION CO	ANSCHUTZ RANCH EAST W30-13	Gas Well	Shut_In	ANSCHUTZ RANCH EAST	25	4N-7E
43-043-30280-00-00	AMOCO PRODUCTION CO	ANSCHUTZ RANCH EAST W31-05	Gas Well	Producing Well	ANSCHUTZ RANCH EAST	31	4N-8E
43-043-30283-00-00	AMOCO PRODUCTION CO	ANSCHUTZ RANCH EAST W12-04	Gas Well	Producing Well	ANSCHUTZ RANCH EAST	2	3N-7E
43-043-30286-00-00	AMOCO PRODUCTION CO	ANSCHUTZ RANCH EAST W20-09	Gas Well	Producing Well	ANSCHUTZ RANCH EAST	20	4N-8E
43-043-30291-00-00	AMOCO PRODUCTION CO	ANSCHUTZ RANCH EAST W20-03	Gas Well	Shut_In	ANSCHUTZ RANCH EAST	20	4N-8E

Division of Oil, Gas and Mining

OPERATOR CHANGE WORKSHEET

ROUTING

1. GLH		4-KAS
2. CDW ✓		5-LP
3. JLT		6-FILE

Enter date after each listed item is completed

Change of Operator (Well Sold) — Designation of Agent

X Operator Name Change — Merger

The operator of the well(s) listed below has changed, effective: **12-31-2001**

FROM: (Old Operator):	**TO:** (New Operator):
AMOCO PRODUCTION COMPANY	BP AMERICA PRODUCTION COMPANY
Address: 501 WESTLAKE PARK BLVD	Address: 501 WESTLAKE PARK BLVD
HOUSTON, TX 77079	HOUSTON,TX 77079
Phone: 1-(281)-366-5328	Phone: 1-(281)-366-5328
Account N0050	Account N1990

CA No. **Unit:** **ANSCHUTZ RANCH EAST**

WELL(S)

NAME	API NO.	ENTITY NO.	SEC. TWN RNG	LEASE TYPE	WELL TYPE	WELL STATUS
ANSCHUTZ RANCH EAST W01-06	43-043-30188	4540	01-3N-7E	FEE	GW	P
ANSCHUTZ RANCH EAST W01-02	43-043-30209	4540	01-3N-7E	FEE	GW	P
ANSCHUTZ RANCH EAST W01-04	43-043-30270	4540	01-3N-7E	FEE	GW	S
ANSCHUTZ RANCH EAST W01-12	43-043-30271	4540	01-3N-7E	FEE	GW	S
ANSCHUTZ RANCH EAST W12-04	43-043-30283	4540	02-3N-7E	FEE	GW	P
ANSCHUTZ RANCH EAST W11-1	43-043-30277	4540	11-3N-7E	FEE	GW	S
ANSCHUTZ RANCH EAST W30-13	43-043-30279	4540	25-4N-7E	FEE	GW	S
ANSCHUTZ RANCH EAST W36-08	43-043-30167	4540	36-4N-7E	FEE	GW	P
ANSCHUTZ RANCH EAST W36-16	43-043-30157	4540	36-4N-7E	FEE	GW	P
ANSCHUTZ RANCH EAST W36-10	43-043-30227	4540	36-4N-7E	FEE	GW	P
ANSCHUTZ RANCH EAST W36-14	43-043-30255	4540	36-4N-7E	FEE	GW	S
ANSCHUTZ RANCH EAST W16-06	43-043-30138	4540	16-4N-8E	FEE	GW	S
ANSCHUTZ RANCH EAST W16-12	43-043-30231	4540	16-4N-8E	FEE	GW	S
ANSCHUTZ RANCH EAST W16-14	43-043-30096	4540	16-4N-8E	FEE	GW	S
ANSCHUTZ RANCH EAST W17-16	43-043-30176	4540	17-4N-8E	FEE	GW	S
ANSCHUTZ RANCH EAST W19-16	43-043-30204	4540	19-4N-8E	FEE	GW	S
ANSCHUTZ RANCH EAST W20-08	43-043-30123	4540	20-4N-8E	FEE	GW	P
ANSCHUTZ RANCH EAST W20-14	43-043-30145	4540	20-4N-8E	FEE	GW	P
ANSCHUTZ RANCH EAST W20-06	43-043-30159	4540	20-4N-8E	FEE	GW	S
ANSCHUTZ RANCH EAST W20-16	43-043-30148	4540	20-4N-8E	FEE	GW	P

OPERATOR CHANGES DOCUMENTATION

1. (R649-8-10) Sundry or legal documentation was received from the **FORMER** operator on: 12/13/2001
2. (R649-8-10) Sundry or legal documentation was received from the **NEW** operator on: 12/13/2001

3. The new company has been checked through the **Department of Commerce, Division of Corporations Database on:** 12/14/2001

4. Is the new operator registered in the State of Utah: YES Business Number: PENDING

5. If **NO**, the operator was contacted contacted on: N/A

---

6. **Federal and Indian Lease Wells:** The BLM and or the BIA has approved the (merger, name change, or operator change) for all wells listed on Federal or Indian leases on: N/A

---

7. **Federal and Indian Units:** The BLM or BIA has approved the successor of unit operator for wells listed on: N/A

---

8. **Federal and Indian Communization Agreements ("CA"):** The BLM or the BIA has approved the operator change for all wells listed involved in a CA on: N/A

---

9. **Underground Injection Control ("UIC")** The Division has approved UIC Form 5, **Transfer of Authority to Inject,** for the enhanced/secondary recovery unit/project for the water disposal well(s) listed on: N/A

DATA ENTRY:

1. Changes entered in the **Oil and Gas Database on:** 12/17/2001

2. Changes have been entered on the **Monthly Operator Change Spread Sheet on:** 12/17/2001

3. Bond information entered in RBDMS on: 12/11/2001

4. Fee wells attached to bond in RBDMS on: 12/17/2001

STATE BOND VERIFICATION:

1. State well(s) covered by Bond No.: N/A

INDIAN BOND VERIFICATION:

1. Indian well(s) covered by Bond No.: N/A

FEDERAL BOND VERIFICATION:

1. Federal well(s) covered by Bond No.: N/A

FEE WELLS - BOND VERIFICATION/LEASE INTEREST OWNER NOTIFICATION:

1. (R649-3-1) The **NEW** operator of any fee well(s) listed has furnished a bond: 103172911249

2. The **FORMER** operator has requested a release of liability from their bond on: N/A
   The Division sent response by letter on: N/A

3. (R649-2-10) The **FORMER** operator of the Fee wells has been contacted and informed by a letter from the Division of their responsibility to notify all interest owners of this change on: 12/19/2001

COMMENTS:

Division of Oil, Gas and Mining

OPERATOR CHANGE WORKSHEET

ROUTING		
1. GLH		4-KAS
2. CDW✓		5-LP
3. JLT		6-FILE

Enter date after each listed item is completed

Change of Operator (Well Sold) — Designation of Agent

X Operator Name Change — Merger

The operator of the well(s) listed below has changed, effective: **12-31-2001**

FROM: (Old Operator):	**TO:** (New Operator):
AMOCO PRODUCTION COMPANY	BP AMERICA PRODUCTION COMPANY
Address: 501 WESTLAKE PARK BLVD	Address: 501 WESTLAKE PARK BLVD
HOUSTON, TX 77079	HOUSTON,TX 77079
Phone: 1-(281)-366-5328	Phone: 1-(281)-366-5328
Account N0050	Account N1990

CA No. **Unit:** **ANSCHUTZ RANCH EAST**

WELL(S)

NAME	API NO.	ENTITY NO.	SEC. TWN RNG	LEASE TYPE	WELL TYPE	WELL STATUS
ANSCHUTZ RANCH EAST W20-02	43-043-30228	4540	20-4N-8E	FEE	GW	S
ANSCHUTZ RANCH EAST W20-03	43-043-30291	4540	20-4N-8E	FEE	GW	S
ANSCHUTZ RANCH EAST W20-04	43-043-30238	4540	20-4N-8E	FEE	GW	S
ANSCHUTZ RANCH EAST W20-06	43-043-30159	4540	20-4N-8E	FEE	GW	S
ANSCHUTZ RANCH EAST W20-09	43-043-30286	4540	20-4N-8E	FEE	GW	P
ANSCHUTZ RANCH EAST W20-10	43-043-30229	4540	20-4N-8E	FEE	GW	P
ANSCHUTZ RANCH EAST W20-12	43-043-30220	4540	20-4N-8E	FEE	GW	S
ANSCHUTZ RANCH EAST E21-14	43-043-30130	4540	21-4N-8E	FEE	GW	S
ANSCHUTZ RANCH EAST W21-04	43-043-30135	4540	21-4N-8E	FEE	GW	S
ANSCHUTZ RANCH EAST E28-06	43-043-30226	4540	28-4N-8E	FEE	GW	P
ANSCHUTZ RANCH EAST E28-12	43-043-30257	4540	28-4N-8E	FEE	GW	P
ARE 29-04ST1	43-043-30129	4540	29-4N-8E	FEE	GW	P
ANSCHUTZ RANCH EAST W29-02	43-043-30136	4540	29-4N-8E	FEE	GW	P
ANSCHUTZ RANCH EAST W29-12	43-043-30154	4540	29-4N-8E	FEE	GW	P
ANSCHUTZ RANCH EAST W29-06A	43-043-30250	4540	29-4N-8E	FEE	GW	P
ANSCHUTZ RANCH EAST W29-14A	43-043-30251	4540	29-4N-8E	FEE	GW	P
ANSCHUTZ RANCH EAST W30-08	43-043-30183	4540	30-4N-8E	FEE	GW	P
ANSCHUTZ RANCH EAST W30-10	43-043-30215	4540	30-4N-8E	FEE	GW	P
ANSCHUTZ RANCH EAST W30-14	43-043-30185	4540	30-4N-8E	FEE	GW	S
ANSCHUTZ RANCH EAST W30-16	43-043-30156	4540	30-4N-8E	FEE	GW	P

OPERATOR CHANGES DOCUMENTATION

1. (R649-8-10) Sundry or legal documentation was received from the **FORMER** operator on: 12/13/2001
2. (R649-8-10) Sundry or legal documentation was received from the **NEW** operator on: 12/13/2001

3. The new company has been checked through the **Department of Commerce, Division of Corporations Database on:** 12/14/2001

4. Is the new operator registered in the State of Utah: YES Business Number: PENDING

5. If **NO**, the operator was contacted contacted on: N/A

6. **Federal and Indian Lease Wells:** The BLM and or the BIA has approved the (merger, name change, or operator change) for all wells listed on Federal or Indian leases on: N/A

7. **Federal and Indian Units:** The BLM or BIA has approved the successor of unit operator for wells listed on: N/A

8. **Federal and Indian Communization Agreements ("CA"):** The BLM or the BIA has approved the operator change for all wells listed involved in a CA on: N/A

9. **Underground Injection Control ("UIC")** The Division has approved UIC Form 5, **Transfer of Authority to Inject,** for the enhanced/secondary recovery unit/project for the water disposal well(s) listed on: N/A

DATA ENTRY:

1. Changes entered in the **Oil and Gas Database on:** 12/17/2001

2. Changes have been entered on the **Monthly Operator Change Spread Sheet on:** 12/17/2001

3. Bond information entered in RBDMS on: 12/11/2001

4. Fee wells attached to bond in RBDMS on: 12/17/2001

STATE BOND VERIFICATION:

1. State well(s) covered by Bond No.: N/A

INDIAN BOND VERIFICATION:

1. Indian well(s) covered by Bond No.: N/A

FEDERAL BOND VERIFICATION:

1. Federal well(s) covered by Bond No.: N/A

FEE WELLS - BOND VERIFICATION/LEASE INTEREST OWNER NOTIFICATION:

1. (R649-3-1) The **NEW** operator of any fee well(s) listed has furnished a bond: 103172911249

2. The **FORMER** operator has requested a release of liability from their bond on: N/A
   The Division sent response by letter on: N/A

3. (R649-2-10) The **FORMER** operator of the Fee wells has been contacted and informed by a letter from the Division of their responsibility to notify all interest owners of this change on: 12/19/2001

COMMENTS:

STATE OF UTAH
DEPARTMENT OF NATURAL RESOURCES
DIVISION OF OIL, GAS AND MINING

FORM 9

SUNDRY NOTICES AND REPORTS ON WELLS

Do not use this form for proposals to drill new wells, significantly deepen existing wells below current bottom-hole depth, reenter plugged wells, or to drill horizontal laterals. Use APPLICATION FOR PERMIT TO DRILL form for such proposals.

5. LEASE DESIGNATION AND SERIAL NUMBER:

6. IF INDIAN, ALLOTTEE OR TRIBE NAME:

7. UNIT or CA AGREEMENT NAME: See Attached

1. TYPE OF WELL: OIL WELL ☐ GAS WELL ☐ OTHER See Attached

8. WELL NAME and NUMBER: See Attached

2. NAME OF OPERATOR: BP America Production Company

9. API NUMBER: Attached

3. ADDRESS OF OPERATOR: 501 WestLake Park Blv CITY Houston STATE TX ZIP 77079 PHONE NUMBER: (281) 366-2000

10. FIELD AND POOL, OR WILDCAT: See Attached

4. LOCATION OF WELL

FOOTAGES AT SURFACE: See Attached

COUNTY: See Attached

QTR/QTR, SECTION, TOWNSHIP, RANGE, MERIDIAN:

STATE: UTAH

11. CHECK APPROPRIATE BOXES TO INDICATE NATURE OF NOTICE, REPORT, OR OTHER DATA

TYPE OF SUBMISSION	TYPE OF ACTION		
☑ NOTICE OF INTENT (Submit in Duplicate)	☐ ACIDIZE	☐ DEEPEN	☐ REPERFORATE CURRENT FORMATION
Approximate date work will start:	☐ ALTER CASING	☐ FRACTURE TREAT	☐ SIDETRACK TO REPAIR WELL
	☐ CASING REPAIR	☐ NEW CONSTRUCTION	☐ TEMPORARILY ABANDON
	☐ CHANGE TO PREVIOUS PLANS	☑ OPERATOR CHANGE	☐ TUBING REPAIR
	☐ CHANGE TUBING	☐ PLUG AND ABANDON	☐ VENT OR FLARE
☐ SUBSEQUENT REPORT (Submit Original Form Only)	☐ CHANGE WELL NAME	☐ PLUG BACK	☐ WATER DISPOSAL
Date of work completion:	☐ CHANGE WELL STATUS	☐ PRODUCTION (START/RESUME)	☐ WATER SHUT-OFF
	☐ COMMINGLE PRODUCING FORMATIONS	☐ RECLAMATION OF WELL SITE	☐ OTHER:
	☐ CONVERT WELL TYPE	☐ RECOMPLETE - DIFFERENT FORMATION	

12. DESCRIBE PROPOSED OR COMPLETED OPERATIONS. Clearly show all pertinent details including dates, depths, volumes, etc.

BP America Production Company, effective May 1, 2003, has transferred its interest in the attached list of properties to :

Merit Energy Company
13727 Noel Road, Suite 500
Dallas, TX 75240

Transfer of operations is effective July 1, 2003.

By Merit Energy Company

Name Fred N. Dizm Title V.P.

Signature [signature] Date 7/1/03

BP America Production Company

NAME (PLEASE PRINT) David G. Peterson TITLE Attorney-In-Fact

SIGNATURE [signature] DATE 6/26/03

(This space for State use only)

RECEIVED
JUL 03 2003
DIV. OF OIL, GAS & MINING

(5/2000)

(See Instructions on Reverse Side)

BP OPERATED PROPERTIES TRANSFERRED TO MERIT ENERGY COMPANY

API Well Number	Operator	Well Name	Well Type	Well Status	Field Name	County Name	Location (Twp-Rng)	Section	Qtr/Qtr	Ft. NS	NS	Ft. EW	EW
43-043-30096-00-00	BP AMERICA PRODUCTION CO	ARE W16-14	Gas Well	Shut_In	ANSCHUTZ RANCH EAST	SUMMIT	4N-8E	16	NWSW	2137	S	686	W
43-043-30106-00-00	BP AMERICA PRODUCTION CO	ARE 34-2	Water Disposal	Active Well	ANSCHUTZ RANCH	SUMMIT	4N-7E	34	NWNW	1036	N	1100	W
43-043-30123-00-00	BP AMERICA PRODUCTION CO	ARE W20-08	Gas Well	Shut_In	ANSCHUTZ RANCH EAST	SUMMIT	4N-8E	20	SENE	2202	N	1592	E
43-043-30129-00-00	BP AMERICA PRODUCTION CO	ARE 29-04ST1	Gas Well	Producing Well	ANSCHUTZ RANCH EAST	SUMMIT	4N-8E	29	NWNW	627	N	435	W
43-043-30130-00-00	BP AMERICA PRODUCTION CO	ARE E21-14	Gas Well	Shut_In	ANSCHUTZ RANCH EAST	SUMMIT	4N-8E	21	NWSW	2365	S	200	W
43-043-30135-00-00	BP AMERICA PRODUCTION CO	ARE W21-04	Gas Well	Shut_In	ANSCHUTZ RANCH EAST	SUMMIT	4N-8E	21	NWNW	1063	N	401	W
43-043-30136-00-00	BP AMERICA PRODUCTION CO	ARE W29-02	Gas Well	Producing Well	ANSCHUTZ RANCH EAST	SUMMIT	4N-8E	29	NWNE	662	N	2460	E
43-043-30138-00-00	BP AMERICA PRODUCTION CO	ARE W16-06	Gas Well	Shut_In	ANSCHUTZ RANCH EAST	SUMMIT	4N-8E	16	SENE	1314	N	618	E
43-043-30139-00-00	BP AMERICA PRODUCTION CO	ISLAND RANCHING C-1	Water Disposal	Active Well	ANSCHUTZ RANCH	SUMMIT	4N-7E	26	SWSE	1324	S	1722	E
43-043-30143-00-00	BP AMERICA PRODUCTION CO	CHAMPLIN 372 AMOCO C 1	Gas Well	Shut_In	ANSCHUTZ RANCH	SUMMIT	4N-7E	23	NWNW	860	N	536	W
43-043-30145-00-00	BP AMERICA PRODUCTION CO	ARE W20-14	Gas Well	Producing Well	ANSCHUTZ RANCH EAST	SUMMIT	4N-8E	20	NWSW	1518	S	1283	W
43-043-30148-00-00	BP AMERICA PRODUCTION CO	ARE W20-16	Gas Well	Producing Well	ANSCHUTZ RANCH EAST	SUMMIT	4N-8E	20	SWSE	257	S	1640	E
43-043-30154-00-00	BP AMERICA PRODUCTION CO	ARE W29-12	Gas Well	Producing Well	ANSCHUTZ RANCH EAST	SUMMIT	4N-8E	29	NWSW	2204	S	22	W
43-043-30156-00-00	BP AMERICA PRODUCTION CO	ARE W30-16	Gas Well	Producing Well	ANSCHUTZ RANCH EAST	SUMMIT	4N-8E	30	NESE	1345	S	968	E
43-043-30157-00-00	BP AMERICA PRODUCTION CO	ARE W36-16	Gas Well	Producing Well	ANSCHUTZ RANCH EAST	SUMMIT	4N-7E	36	SESE	890	S	447	E
43-043-30159-00-00	BP AMERICA PRODUCTION CO	ARE W20-06	Gas Well	Shut_In	ANSCHUTZ RANCH EAST	SUMMIT	4N-8E	20	NWNW	1291	N	936	W
43-043-30162-00-00	BP AMERICA PRODUCTION CO	ARE W32-04	Gas Well	Producing Well	ANSCHUTZ RANCH EAST	SUMMIT	4N-8E	32	NWNW	642	N	791	W
43-043-30164-00-00	BP AMERICA PRODUCTION CO	ARE W31-08	Gas Well	Producing Well	ANSCHUTZ RANCH EAST	SUMMIT	4N-8E	31	NWNE	468	N	2201	E
43-043-30165-00-00	BP AMERICA PRODUCTION CO	ARE W31-04E	Gas Well	Shut_In	ANSCHUTZ RANCH EAST	SUMMIT	4N-8E	31	NWNW	111	N	737	W
43-043-30167-00-00	BP AMERICA PRODUCTION CO	ARE W36-08	Gas Well	Shut_In	ANSCHUTZ RANCH EAST	SUMMIT	4N-7E	36	SENE	1641	N	1183	E
43-043-30168-00-00	BP AMERICA PRODUCTION CO	CHAMPLIN 387 B1A	Gas Well	Shut_In	ANSCHUTZ RANCH	SUMMIT	3N-7E	9	SWNW	1837	N	1286	W
43-043-30170-00-00	BP AMERICA PRODUCTION CO	CHAMPLIN 372 D-1	Gas Well	Producing Well	ANSCHUTZ RANCH	SUMMIT	4N-7E	23	NESE	2170	S	680	E
43-043-30176-00-00	BP AMERICA PRODUCTION CO	ARE W17-16	Gas Well	Shut_In	ANSCHUTZ RANCH EAST	SUMMIT	4N-8E	17	NWSE	1765	S	1444	E
43-043-30183-00-00	BP AMERICA PRODUCTION CO	ARE W30-08	Gas Well	Producing Well	ANSCHUTZ RANCH EAST	SUMMIT	4N-8E	30	SENE	2109	N	665	E
43-043-30185-00-00	BP AMERICA PRODUCTION CO	ARE W30-14	Gas Well	Shut_In	ANSCHUTZ RANCH EAST	SUMMIT	4N-8E	30	SESW	1195	S	1405	W
43-043-30188-00-00	BP AMERICA PRODUCTION CO	ARE W01-06	Gas Well	Producing Well	ANSCHUTZ RANCH EAST	SUMMIT	3N-7E	1	SENW	1777	N	1666	W
43-043-30190-00-00	BP AMERICA PRODUCTION CO	ARE W31-12	Gas Well	Shut_In	ANSCHUTZ RANCH EAST	SUMMIT	4N-8E	31	SWNW	1778	N	640	W
43-043-30204-00-00	BP AMERICA PRODUCTION CO	ARE W19-16	Gas Well	Shut_In	ANSCHUTZ RANCH EAST	SUMMIT	4N-8E	19	SWSE	1229	S	1350	E
43-043-30209-00-00	BP AMERICA PRODUCTION CO	ARE W01-02	Gas Well	Producing Well	ANSCHUTZ RANCH EAST	SUMMIT	3N-7E	1	NENW	386	N	2013	W
43-043-30215-00-00	BP AMERICA PRODUCTION CO	ARE W30-10	Gas Well	Producing Well	ANSCHUTZ RANCH EAST	SUMMIT	4N-8E	30	NWSE	2230	S	2432	E
43-043-30216-00-00	BP AMERICA PRODUCTION CO	ARE W30-15	Gas Well	Producing Well	ANSCHUTZ RANCH EAST	SUMMIT	4N-8E	30	SESW	626	S	2848	E
43-043-30217-00-00	BP AMERICA PRODUCTION CO	ARE W31-06	Gas Well	Producing Well	ANSCHUTZ RANCH EAST	SUMMIT	4N-8E	31	SENW	1397	N	2181	W
43-043-30218-00-00	BP AMERICA PRODUCTION CO	ARE W30-02	Gas Well	Shut_In	ANSCHUTZ RANCH EAST	SUMMIT	4N-8E	30	NWNE	715	N	2182	E
43-043-30220-00-00	BP AMERICA PRODUCTION CO	ARE W20-12	Gas Well	Shut_In	ANSCHUTZ RANCH EAST	SUMMIT	4N-8E	20	NWSW	2531	S	7	W
43-043-30226-00-00	BP AMERICA PRODUCTION CO	ARE E28-06	Gas Well	Producing Well	ANSCHUTZ RANCH EAST	SUMMIT	4N-8E	28	SENW	1900	N	1652	W
43-043-30227-00-00	BP AMERICA PRODUCTION CO	ARE W36-10	Gas Well	Shut_In	ANSCHUTZ RANCH EAST	SUMMIT	4N-7E	36	NESW	2315	S	3185	E
43-043-30228-00-00	BP AMERICA PRODUCTION CO	ARE W20-02	Gas Well	Shut_In	ANSCHUTZ RANCH EAST	SUMMIT	4N-8E	20	NWNE	319	N	2000	E
43-043-30229-00-00	BP AMERICA PRODUCTION CO	ARE W20-10	Gas Well	Producing Well	ANSCHUTZ RANCH EAST	SUMMIT	4N-8E	20	SENW	2560	N	2567	W
43-043-30231-00-00	BP AMERICA PRODUCTION CO	ARE W16-12	Gas Well	Shut_In	ANSCHUTZ RANCH EAST	SUMMIT	4N-8E	16	SWNW	2756	S	454	W
43-043-30238-00-00	BP AMERICA PRODUCTION CO	ARE W20-04	Gas Well	Shut_In	ANSCHUTZ RANCH EAST	SUMMIT	4N-8E	20	NWNW	702	N	414	W
43-043-30248-00-00	BP AMERICA PRODUCTION CO	ARE W30-12A	Gas Injection	Inactive Well	ANSCHUTZ RANCH EAST	SUMMIT	4N-8E	30	NWSW	1886	S	47	W
43-043-30250-00-00	BP AMERICA PRODUCTION CO	ARE W29-06A	Gas Well	Producing Well	ANSCHUTZ RANCH EAST	SUMMIT	4N-8E	29	SENW	1513	N	1548	W
43-043-30251-00-00	BP AMERICA PRODUCTION CO	ARE W29-14A	Gas Well	Producing Well	ANSCHUTZ RANCH EAST	SUMMIT	4N-8E	29	NWSW	1786	S	795	W
43-043-30255-00-00	BP AMERICA PRODUCTION CO	ARE W36-14	Gas Well	Shut_In	ANSCHUTZ RANCH EAST	SUMMIT	4N-7E	36	SESW	901	S	1780	W
43-043-30257-00-00	BP AMERICA PRODUCTION CO	ARE E28-12	Gas Well	Producing Well	ANSCHUTZ RANCH EAST	SUMMIT	4N-8E	28	NWSW	1994	S	806	W
43-043-30265-00-00	BP AMERICA PRODUCTION CO	ARE W2-10	Gas Injection	Inactive Well	ANSCHUTZ RANCH EAST	SUMMIT	3N-7E	2	NWSE	1959	S	1463	E
43-043-30270-00-00	BP AMERICA PRODUCTION CO	ARE W01-04	Gas Well	Shut_In	ANSCHUTZ RANCH EAST	SUMMIT	3N-7E	1	SWNW	697	N	465	W
43-043-30271-00-00	BP AMERICA PRODUCTION CO	ARE W01-12	Gas Well	Shut_In	ANSCHUTZ RANCH EAST	SUMMIT	3N-7E	1	NWSW	2072	S	1669	W
43-043-30272-00-00	BP AMERICA PRODUCTION CO	ARE W19-08	Gas Injection	Inactive Well	ANSCHUTZ RANCH EAST	SUMMIT	4N-8E	19	SENE	2227	N	301	E

BP OPERATED PROPERTIES TRANSFERRED TO MERIT ENERGY COMPANY

43-043-30273-00-00	BP AMERICA PRODUCTION CO	ARE W30-06	Gas Well	Shut_In	ANSCHUTZ RANCH EAST	SUMMIT	4N-8E	30 SENW	2393 S	1645 W
43-043-30277-00-00	BP AMERICA PRODUCTION CO	ARE W11-1	Gas Well	Shut_In	ANSCHUTZ RANCH EAST	SUMMIT	3N-7E	11 NENE	533 N	1486 E
43-043-30279-00-00	BP AMERICA PRODUCTION CO	ARE W30-13	Gas Well	Shut_In	ANSCHUTZ RANCH EAST	SUMMIT	4N-7E	25 SESE	597 S	382 E
43-043-30280-00-00	BP AMERICA PRODUCTION CO	ARE W31-05	Gas Well	Producing Well	ANSCHUTZ RANCH EAST	SUMMIT	4N-8E	31 SWNW	2361 N	282 E
43-043-30283-00-00	BP AMERICA PRODUCTION CO	ARE W12-04	Gas Well	Producing Well	ANSCHUTZ RANCH EAST	SUMMIT	3N-7E	2 SESE	373 S	865 E
43-043-30286-00-00	BP AMERICA PRODUCTION CO	ARE W20-09	Gas Well	Producing Well	ANSCHUTZ RANCH EAST	SUMMIT	4N-8E	20 SENE	2360 N	430 E
43-043-30291-00-00	BP AMERICA PRODUCTION CO	ARE W20-03	Gas Well	Shut_In	ANSCHUTZ RANCH EAST	SUMMIT	4N-8E	20 SESW	641 S	1810 W

Division of Oil, Gas and Mining

OPERATOR CHANGE WORKSHEET

ROUTING
1. GLH
2. CDW
3. FILE

X **Change of Operator (Well Sold)** — **Designation of Agent/Operator**

Operator Name Change — Merger

The operator of the well(s) listed below has changed, effective: **7/1/2003**

FROM: (Old Operator):	**TO:** (New Operator):
N1990-BP America Production Company 501 WestLake Park Blvd Houston, TX 77079 Phone: (281) 366-2000	N4900-Merit Energy Company 13727 Noel Road, Suite 500 Dallas, TX 75240 Phone: (972) 628-1558

CA No. **Unit:** ANSCHUTZ RANCH EAST

WELL(S)

NAME	SEC	TWN	RNG	API NO	ENTITY NO	LEASE TYPE	WELL TYPE	WELL STATUS
ARE W01-06	01	030N	070E	4304330188	4540	FEE	GW	P
ARE W36-16	36	040N	070E	4304330157	4540	FEE	GW	P
ARE W36-08	36	040N	070E	4304330167	4540	FEE	GW	S
ARE W16-14	16	040N	080E	4304330096	4540	FEE	GW	S
ARE W16-06	16	040N	080E	4304330138	4540	FEE	GW	S
ARE W17-16	17	040N	080E	4304330176	4540	FEE	GW	S
ARE W20-08	20	040N	080E	4304330123	4540	FEE	GW	S
ARE W20-14	20	040N	080E	4304330145	4540	FEE	GW	P
ARE W20-16	20	040N	080E	4304330148	4540	FEE	GW	P
ARE W20-06	20	040N	080E	4304330159	4540	FEE	GW	S
ARE E21-14	21	040N	080E	4304330130	4540	FEE	GW	S
ARE W21-04	21	040N	080E	4304330135	4540	FEE	GW	S
ARE 29-04ST1	29	040N	080E	4304330129	4540	FEE	GW	P
ARE W29-02	29	040N	080E	4304330136	4540	FEE	GW	P
ARE W29-12	29	040N	080E	4304330154	4540	FEE	GW	P
ARE W30-16	30	040N	080E	4304330156	4540	FEE	GW	P
ARE W30-08	30	040N	080E	4304330183	4540	FEE	GW	P
ARE W30-14	30	040N	080E	4304330185	4540	FEE	GW	S
ARE W31-08	31	040N	080E	4304330164	4540	FEE	GW	P
ARE W31-04E	31	040N	080E	4304330165	4540	FEE	GW	S
ARE W32-04	32	040N	080E	4304330162	4540	FEE	GW	P

OPERATOR CHANGES DOCUMENTATION

Enter date after each listed item is completed

1. (R649-8-10) Sundry or legal documentation was received from the **FORMER** operator on: 7/3/2003
2. (R649-8-10) Sundry or legal documentation was received from the **NEW** operator on: 7/3/2003
3. The new company was checked on the **Department of Commerce, Division of Corporations Database on:** 8/7/2003
4. Is the new operator registered in the State of Utah: YES Business Number: 1348145-0143
5. If **NO**, the operator was contacted contacted on: _____

21

6. (R649-9-2)Waste Management Plan has been received on: IN PLACE

7. **Federal and Indian Lease Wells:** The BLM and or the BIA has approved the merger, name change, or operator change for all wells listed on Federal or Indian leases on: n/a

8. **Federal and Indian Units:**
The BLM or BIA has approved the successor of unit operator for wells listed on: n/a

9. **Federal and Indian Communization Agreements ("CA"):**
The BLM or BIA has approved the operator for all wells listed within a CA on: n/a

10. **Underground Injection Control ("UIC")** The Division has approved UIC Form 5, **Transfer of Authority to Inject,** for the enhanced/secondary recovery unit/project for the water disposal well(s) listed on: n/a

DATA ENTRY:

1. Changes entered in the **Oil and Gas Database on:** 8/26/2003
2. Changes have been entered on the **Monthly Operator Change Spread Sheet on:** 8/26/2003
3. Bond information entered in RBDMS on: 8/26/2003
4. Fee wells attached to bond in RBDMS on: 8/26/2003

STATE WELL(S) BOND VERIFICATION:

1. State well(s) covered by Bond Number: n/a

FEDERAL WELL(S) BOND VERIFICATION:

1. Federal well(s) covered by Bond Number: n/a

INDIAN WELL(S) BOND VERIFICATION:

1. Indian well(s) covered by Bond Number: n/a

FEE WELL(S) BOND VERIFICATION:

1. (R649-3-1) The **NEW** operator of any fee well(s) listed covered by Bond Number 103912218

2. The **FORMER** operator has requested a release of liability from their bond on: n/a
The Division sent response by letter on: n/a

LEASE INTEREST OWNER NOTIFICATION:

3. (R649-2-10) The **FORMER** operator of the fee wells has been contacted and informed by a letter from the Division of their responsibility to notify all interest owners of this change on: 8/26/2003

COMMENTS:

State of Utah
DEPARTMENT OF NATURAL RESOURCES
DIVISION OF OIL, GAS AND MINING

Michael O. Leavitt
Governor
Robert L. Morgan
Executive Director
Lowell P. Braxton
Division Director

1594 West North Temple, Suite 1210
PO Box 145801
Salt Lake City, Utah 84114-5801
(801) 538-5340 telephone
(801) 359-3940 fax
(801) 538-7223 TTY
www.nr.utah.gov

August 26, 2003

Bruce Williams
BP America Production Company
501 WestLake Park Blvd
Houston, TX 77079

Subject: Notification of Sale or Transfer of Fee Lease Interest

Dear Mr. Williams:

The Division has processed your request for an operator change from BP America Production Company to Merit Energy Company effective July 1, 2003 for the attached list of fee wells.

Utah Administrative Code Rule R649-2-10 states: "The owner of a lease shall provide notification to any person with an interest in such lease, when all or part of that interest in the lease is sold or transferred".

This letter is written to advise you of your responsibility to notify all individuals with an interest in these leases (royalty interest and working interest) of the changer. Please provide written documentation of this notification to:

Utah Royalty Owners Association
PO Box 1292
Roosevelt, Utah 84066

Your assistance in this matter is appreciated.

Sincerely,

Earlene Russell

Earlene Russell
Engineering Technician

Attachment

cc: Merit Energy Company
Utah Royalty Owners Association

Clint

State of Utah

Department of
Natural Resources

Division of
Oil, Gas & Mining

ROBERT L. MORGAN
Executive Director

LOWELL P. BRAXTON
Division Director

MICHAEL O. LEAVITT
Governor

OLENE S. WALKER
Lieutenant Governor

January 22, 2004

CERTIFIED MAIL #7002 0510 0003 8602 4798

Lance Taylor
Merit Energy Company
13727 Noel Road, Suite 500
Dallas, TX 75240-7312

Re: Extended Shut-in and Temporary Abandoned Well Requirements for Fee or State Leases.

Dear Mr. Taylor:

Merit Energy Company, as of January 2004, has twenty-four (24) Fee Lease Wells (see attachment A) that are currently in non-compliance for extended shut-in or temporary abandonment status. This includes twenty (20) Fee Lease Wells with returned Sundry Notices and attached requirement sheet dated November 19, 2003. Wells SI/TA beyond twelve (12) consecutive months requires filing a Sundry Notice (R649-3-36-1). Wells with five (5) years non-activity or non-productivity shall be plugged, unless the Division grants approval for extended shut-in time upon a showing of good cause by the operator (649-3-36-1.3.3). For extended SI/TA consideration the operator shall provide the Utah Division of Oil, Gas & Mining with the following:

1. Reasons for SI/TA of the well (R649-3-36-1.1).
2. The length of time the well is expected to be SI/TA (R649-3-36-1.2), and
3. An explanation and supporting data if necessary, for showing the well has integrity, meaning that the casing, cement, equipment condition, static fluid level, pressure, existence or absence of Underground Sources of Drinking Water and other factors do not make the well a risk to public health and safety or the environment (R649-3-36-1.3).

Submitting the information suggested below may help show well integrity and may help qualify your well for extended SI/TA. **Note: As of July 1, 2003, wells in violation of the SI/TA rule R649-3-36 may be subject to full cost bonding (R649-3-1-4.2, 4.3).**

1. Wellbore diagram, and
2. Copy of recent casing pressure test, and
3. Current pressures on the wellbore (tubing pressure, casing pressure, and casing/casing annuli pressure) showing wellbore has integrity, and
4. Fluid level in the wellbore, and
5. An explanation of how the submitted information proves integrity.

If the required information is not received within 30 days of the date of this notice, further actions may be initiated. If you have any questions concerning this matter, please contact me at (801) 538-5281.

Sincerely,

Dustin K. Doucet
Petroleum Engineer

jc
cc: John Baza
Well File

	Well Name	API	Lease Type	Years Inactive
1	ARE W20-06	43-043-30159	Fee	1 Year 2 Months
2	ARE W31-04E	43-043-30165	Fee	1 Year 3 Months
3	ARE W36-10	43-043-30227	Fee	1 Year 3 Months
4	ARE W36-08	43-043-30167	Fee	1 Year 7 Months

Wells with returned Sundry Notices and attached requirement sheet dated November 19, 2003

1	ARE W21-04	43-043-30135	Fee	1 Year 10 Months
2	Champlin 372 Amoco C1	43-043-30143	Fee	1 Year 11 Months
3	ARE W16-06	43-043-30138	Fee	1 Year 11 Months
4	ARE W01-12	43-043-30271	Fee	2 Years 4 Months
5	ARE W30-02	43-043-30218	Fee	3 Years 2 Months
6	ARE W36-14	43-043-30255	Fee	4 Years 5 Months
7	ARE W30-06	43-043-30273	Fee	5 Years 4 Months
8	ARE W20-02	43-043-30228	Fee	5 Years 4 Months
9	ARE W30-13	43-043-30279	Fee	5 Years 6 Months
10	ARE W19-16	43-043-30204	Fee	5 Years 8 Months
11	ARE W20-4	43-043-30238	Fee	6 Years 3 Months
12	ARE W31-12	43-043-30190	Fee	7 Years 3 Months
13	ARE W01-04	43-043-30270	Fee	7 Years 4 Months
14	ARE W11-01	43-043-30277	Fee	7 Years 4 Months
15	ARE W20-03	43-043-30291	Fee	8 Years 1 Month
16	ARE W16-14	43-043-30096	Fee	8 Years 1 Month
17	ARE 16-12	43-043-30231	Fee	8 Years 3 Months
18	Champlin 387 B1A	43-043-30168	Fee	8 Years 6 Months
19	ARE W17-16	43-043-30176	Fee	8 Years 7 Months
20	ARE E21-14	43-043-30130	Fee	10 Years 8 Months

Attachment A

Wellfile
43-043-30159

State of Utah

Department of
Natural Resources

Division of
Oil, Gas & Mining

ROBERT L. MORGAN
Executive Director

LOWELL P. BRAXTON
Division Director

MICHAEL O. LEAVITT
Governor

OLENE S. WALKER
Lieutenant Governor

January 22, 2004

CERTIFIED MAIL #7002 0510 0003 8602 4798

Lance Taylor
Merit Energy Company
13727 Noel Road, Suite 500
Dallas, TX 75240-7312

Re: Extended Shut-in and Temporary Abandoned Well Requirements for Fee or State Leases.

Dear Mr. Taylor:

Merit Energy Company, as of January 2004, has twenty-four (24) Fee Lease Wells (see attachment A) that are currently in non-compliance for extended shut-in or temporary abandonment status. This includes twenty (20) Fee Lease Wells with returned Sundry Notices and attached requirement sheet dated November 19, 2003. Wells SI/TA beyond twelve (12) consecutive months requires filing a Sundry Notice (R649-3-36-1). Wells with five (5) years non-activity or non-productivity shall be plugged, unless the Division grants approval for extended shut-in time upon a showing of good cause by the operator (649-3-36-1.3.3). For extended SI/TA consideration the operator shall provide the Utah Division of Oil, Gas & Mining with the following:

1. Reasons for SI/TA of the well (R649-3-36-1.1).
2. The length of time the well is expected to be SI/TA (R649-3-36-1.2), and
3. An explanation and supporting data if necessary, for showing the well has integrity, meaning that the casing, cement, equipment condition, static fluid level, pressure, existence or absence of Underground Sources of Drinking Water and other factors do not make the well a risk to public health and safety or the environment (R649-3-36-1.3).

Submitting the information suggested below may help show well integrity and may help qualify your well for extended SI/TA. **Note: As of July 1, 2003, wells in violation of the SI/TA rule R649-3-36 may be subject to full cost bonding (R649-3-1-4.2, 4.3).**

1. Wellbore diagram, and
2. Copy of recent casing pressure test, and
3. Current pressures on the wellbore (tubing pressure, casing pressure, and casing/casing annuli pressure) showing wellbore has integrity, and
4. Fluid level in the wellbore, and
5. An explanation of how the submitted information proves integrity.

If the required information is not received within 30 days of the date of this notice, further actions may be initiated. If you have any questions concerning this matter, please contact me at (801) 538-5281.

Sincerely,

Dustin K. Doucet
Petroleum Engineer

jc
cc: John Baza
Well File

	Well Name	API	Lease Type	Years Inactive
1	ARE W20-06	43-043-30159	Fee	1 Year 2 Months
2	ARE W31-04E	43-043-30165	Fee	1 Year 3 Months
3	ARE W36-10	43-043-30227	Fee	1 Year 3 Months
4	ARE W36-08	43-043-30167	Fee	1 Year 7 Months

Wells with returned Sundry Notices and attached requirement sheet dated November 19, 2003

1	ARE W21-04	43-043-30135	Fee	1 Year 10 Months
2	Champlin 372 Amoco C1	43-043-30143	Fee	1 Year 11 Months
3	ARE W16-06	43-043-30138	Fee	1 Year 11 Months
4	ARE W01-12	43-043-30271	Fee	2 Years 4 Months
5	ARE W30-02	43-043-30218	Fee	3 Years 2 Months
6	ARE W36-14	43-043-30255	Fee	4 Years 5 Months
7	ARE W30-06	43-043-30273	Fee	5 Years 4 Months
8	ARE W20-02	43-043-30228	Fee	5 Years 4 Months
9	ARE W30-13	43-043-30279	Fee	5 Years 6 Months
10	ARE W19-16	43-043-30204	Fee	5 Years 8 Months
11	ARE W20-4	43-043-30238	Fee	6 Years 3 Months
12	ARE W31-12	43-043-30190	Fee	7 Years 3 Months
13	ARE W01-04	43-043-30270	Fee	7 Years 4 Months
14	ARE W11-01	43-043-30277	Fee	7 Years 4 Months
15	ARE W20-03	43-043-30291	Fee	8 Years 1 Month
16	ARE W16-14	43-043-30096	Fee	8 Years 1 Month
17	ARE 16-12	43-043-30231	Fee	8 Years 3 Months
18	Champlin 387 B1A	43-043-30168	Fee	8 Years 6 Months
19	ARE W17-16	43-043-30176	Fee	8 Years 7 Months
20	ARE E21-14	43-043-30130	Fee	10 Years 8 Months

Attachment A

MERIT ENERGY COMPANY

13727 Noel Road, Suite 500
Dallas, TX 75240
Ph: 972-701-8377 **Fx:** 972-960-1252
www.meritenergy.com

Date: February 13, 2004

Subject: Extended Shut-in wells in the Anschutz Ranch East Field

Dear Mr. Doucet:

In response to your letter dated January 22, 2004, I would like to submit the attached supporting documentation regarding our extended shut-in wells. Merit Energy Company purchased an operating interest in the Anschutz Ranch East Unit from BP Production Company effective July 1, 2003, and has spent the last seven months evaluating the production capability of all active and inactive wells in the field. This process has resulted in workovers that have reestablished production in several of these wells, and revealed future opportunities for all of the others. Here is a quick synopsis of our plans for each well.

- **ARE W20-06-** Workover is planned to immediately reactive this well by running smaller tubing, and putting the well on gas lift. Should be reactivated by mid year 2004.
- **ARE W31-04-** BP attempted a directional reentry of this wellbore in 2001, during which time the drill pipe was inadvertently cemented in the horizontal section of the wellbore. Merit is investigating methods to effectively stimulate this wellbore and return it to production. If unable to do so, it will be plugged.
- **ARE W36-10-** This well will be the first test candidate for an experimental production method for artificial lifting gas wells. An electric submersible pump will be run in this well in the next couple of months in an attempt to reestablish production by removing large volumes of water from the formation. If this project is successful it could lead to the reactivation of virtually every inactive well in the field. The project is approved internally, and we are waiting on equipment and supplies before mobilizing a service rig.
- **ARE W36-08-** This well has been reactivated following a workover last fall. A sundry notice was filed and approved by the Utah Oil and Gas Commission.
- **ARE W21-04-** Surface tubing pressure indicates this well may be capable of producing again. However attempts to return this well to production with the current wellbore configuration have not been successful. Merit plans to install smaller tubing and gas lift on this well. If that is unsuccessful, this well is also a candidate for an electric submersible pump installation. If all attempts to reactivate the Nugget formation fail, this well is a recompletion candidate in the Twin Creek formation.
- **Champlin 372 C-1-** This well is capable of producing for a few days at a time, but quickly loads up with water and dies. Again, this well is a candidate for an electric submersible pump installation, or may be used as a salt water disposal well if additional capacity is needed due to the ESP program.
- **ARE W16-06-** This well will have an electric submersible pump installed if the program is successful. Otherwise it will be plugged.
- **ARE W01-12-** This well will have an electric submersible pump installed if the program is successful. It is also considered for an uphole recompletion.
- **ARE W30-02-** An attempt was made to return this well to production last fall, but was unsuccessful due to high water production. Pending the success of the W36-10, this well will also have an electric submersible pump installed.
- **ARE W36-14-** This well will have an electric submersible pump installed if the program is successful. It is also considered for an uphole recompletion.
- **ARE W30-06-** This well will have an electric submersible pump installed if the program is successful. It is also considered for an uphole recompletion.
- **ARE W20-02-** A workover has been approved internally to reactivate this well, and should begin in the next few weeks A sundry notice was filed and approved by the Utah Oil and Gas Commission.
- **ARE W30-13-** This well will have an electric submersible pump installed if the program is successful. It is also considered for an uphole recompletion.
- **ARE W19-16-** This well will have an electric submersible pump installed if the program is successful. It is also considered for an uphole recompletion.

RECEIVED
FEB 2 0 2004
DIV. OF OIL, GAS & MINING

- **ARE W20-04-** This well will have an electric submersible pump installed if the program is successful. It is also considered for an uphole recompletion.
- **ARE W31-12-** An attempt was made to reactivate this well in late 2003, but was unsuccessful. A sundry notice was filed and approved by the Utah Oil and Gas Commission. An uphole recompletion in the Twin Creek formation is planned and will be completed in the next few months.
- **ARE W01-04-** This well will have an electric submersible pump installed if the program is successful. It is also considered for an uphole recompletion.
- **ARE W11-01-** This well will have an electric submersible pump installed if the program is successful. Otherwise it will be plugged.
- **ARE W20-03-** This well will have an electric submersible pump installed if the program is successful. It is also considered for an uphole recompletion.
- **ARE W16-14-** This well will have an electric submersible pump installed if the program is successful. It is also considered for salt water disposal well if additional capacity is needed.
- **ARE W16-12-** This well will have an electric submersible pump installed if the program is successful. It is also considered for salt water disposal well if additional capacity is needed.
- **Champlin 387 B-1A-** Merit Energy is in the process of obtaining records from BP for this well. Once historical information is obtained, we will evaluate all feasible methods to return this well to producing status. Otherwise it will be plugged.
- **ARE W17-16-** This well will have an electric submersible pump installed if the program is successful. It is also considered for salt water disposal well if additional capacity is needed.
- **ARE E21-14-** This well was returned to producing status on 12/19/03.

In addition to this information, I have enclosed pressure data for all wells, and a wellbore schematic for all wells except the Champlin 387 B-1A. The static bottom hole pressures and static fluid levels were collected in September 2003 with bottom hole gauges. If you need any further information, please contact me at 972-628-1651 or electronically at lance.taylor@meritenergy.com.

Regards,

Lance L. Taylor
Operations Engineer

Cc: Rusty Ginnetti
Arlene Valliquette
Dennis Longwell

Attachments: (1) page of pressure data, (23) wellbore schematics

Return-path: <Lance.Taylor@meritenergy.com>
Received: from imail.meritenergy.com [208.133.141.18]
by UTSTDP13.state.ut.us; Tue, 24 Feb 2004 07:06:49 -0700
Subject: Anschutz Ranch East Unit
To: clintondworshak@utah.gov
Cc: Rusty Ginnetti <Rusty.Ginnetti@meritenergy.com>,
Arlene Valliquette <Arlene.Valliquette@meritenergy.com>,
Dennis Longwell <Dennis.Longwell@meritenergy.com>
X-Mailer: Lotus Notes Release 5.0.10 March 22, 2002
Message-ID: <OF2FAC50A1.BE12C251-ON86256E44.004B0584-86256E44.004D8670@meritenergy.com>
From: Lance Taylor <Lance.Taylor@meritenergy.com>
Date: Tue, 24 Feb 2004 08:06:46 -0600
X-MIMETrack: Serialize by Router on imail/Meritenergy(Release 6.0.3|September 26, 2003) at 02/24/2004 08:06:49 AM
MIME-Version: 1.0
Content-type: text/plain; charset=US-ASCII

Mr. Dworshak,

I'd like to confirm our 2/23/04 telephone conversation in response to my letter dated 2/13/04 regarding extended shut in and temporarily abandoned wellbores in the Anschutz Ranch East Unit ("ARE Unit") of Summit county Utah. It is Merit Energy Company's intention to utilize each wellbore to it's full capacity. As such, Merit is in the process of attempting to reactivate the wellbores in question. Several wellbore specific workovers have been identified, and the approximate timing of each is mentioned in my original letter.

However, the majority of the reactivation work depends on the successful utilization of electric submersible pumps for artificial lift. It is the timing of this project that I would like to address. As you know, this is a capital intensive project, so Merit plans to do the appropriate research prior to implementation. Merit intends to test the idea on the ARE W36-10 within the next 8-12 weeks. Following a 4-12 week test period, Merit will perform a strenuous economic and operational evaluation. If it is determined that the project is valid, full scale implementation could begin as early as June. However, due to the complexity of the equipment, depth of the wells, and unavailability of service rigs, Merit anticipates this project will take several months, possibly one year, to complete. Due to the large volumes of water to be produced by this project, it is likely that one or more of the shut in wells will need to be reactivated as salt water disposal wells. All regulatory and state documentation will be completed prior to SWD conversion.

Finally, if the ESP project is unsuccessful, several of these wellbore have recompletion potential in shallower formations. Specifically, Merit has identified the Jurassic aged Twin Creek formation as a possible recompletion target. Completion practices must be researched and developed in order to ensure economic quantities of hydrocarbons. Again, all state and federal permits will be approved prior to project implementation.

If after all our efforts to economically reactivate these wells fail, Merit Energy will begin the plug and abandonment process. I trust this will clear up any issues of timing. If you have further questions or concerns please feel free to contact me at any of the numbers below.

Regards,

Lance L. Taylor
Operations Engineer-Rockies Region
Merit Energy Company
direct: 972-628-1651
fax: 972-701-0351
mobile: 972-998-9116
lance.taylor@meritenergy.com

State of Utah

Department of Natural Resources

Division of Oil, Gas & Mining

ROBERT L. MORGAN
Executive Director

LOWELL P. BRAXTON
Division Director

MICHAEL O. LEAVITT
Governor

OLENE S. WALKER
Lieutenant Governor

March 5, 2004

CERTIFIED RETURN RECEIPT NO. 7002 0510 0003 8602 4880

Mr. Lance Taylor
Merit Energy Company
13727 Noel Road, Suite 500
Dallas, TX 75240

Re: Extended Shut-in and Temporary Abandoned Well Requirements for Fee or State Leases dated January 22, 2004.

Dear Mr. Taylor,

The Division of Oil, Gas and Mining (DOGM) is in receipt of your letter dated February 13, 2004 in regards to the twenty-four (24) shut-in wells operated by Merit Energy Company (Merit). DOGM accepts Merit's plan of action to recomplete all twenty-four wells by year-end 2004. Many of the recompletions are dependent upon the success of electric submersible pumps; if this experimental procedure is not successful, keep the Division advised of any changes in Merit's plan of action. Based upon the plan of action and other information provided, DOGM approves the twenty-four (24) wells for extended shut-in until January 1, 2005. Please submit recompletion procedures and notice of intent sundries upon finalization.

For reference, Attachment A lists the wells subject to this request. If you have any questions or need additional assistance in regards to the above matters please contact me at (801) 538-5281.

Sincerely,

Dustin Doucet
Petroleum Engineer

1594 West North Temple, Suite 1210, PO Box 145801, Salt Lake City, UT 84114-5801
telephone (801) 538-5340 • facsimile (801) 359-3940 • TTY (801) 538-7223 • *www.ogm.utah.gov*

Utah!
Where ideas connect

	Well Name	API	Lease Type	Years Inactive
1	ARE W20-06	43-043-30159	Fee	1 Year 2 Months
2	ARE W31-04E	43-043-30165	Fee	1 Year 3 Months
3	ARE W36-10	43-043-30227	Fee	1 Year 3 Months
4	ARE W36-08	43-043-30167	Fee	1 Year 7 Months

Wells with returned Sundry Notices and attached requirement sheet dated November 19, 2003

1	ARE W21-04	43-043-30135	Fee	1 Year 10 Months
2	Champlin 372 Amoco C1	43-043-30143	Fee	1 Year 11 Months
3	ARE W16-06	43-043-30138	Fee	1 Year 11 Months
4	ARE W01-12	43-043-30271	Fee	2 Years 4 Months
5	ARE W30-02	43-043-30218	Fee	3 Years 2 Months
6	ARE W36-14	43-043-30255	Fee	4 Years 5 Months
7	ARE W30-06	43-043-30273	Fee	5 Years 4 Months
8	ARE W20-02	43-043-30228	Fee	5 Years 4 Months
9	ARE W30-13	43-043-30279	Fee	5 Years 6 Months
10	ARE W19-16	43-043-30204	Fee	5 Years 8 Months
11	ARE W20-4	43-043-30238	Fee	6 Years 3 Months
12	ARE W31-12	43-043-30190	Fee	7 Years 3 Months
13	ARE W01-04	43-043-30270	Fee	7 Years 4 Months
14	ARE W11-01	43-043-30277	Fee	7 Years 4 Months
15	ARE W20-03	43-043-30291	Fee	8 Years 1 Month
16	ARE W16-14	43-043-30096	Fee	8 Years 1 Month
17	ARE 16-12	43-043-30231	Fee	8 Years 3 Months
18	Champlin 387 B1A	43-043-30168	Fee	8 Years 6 Months
19	ARE W17-16	43-043-30176	Fee	8 Years 7 Months
20	ARE E21-14	43-043-30130	Fee	10 Years 8 Months

Attachment A

MERIT ENERGY COMPANY

13727 Noel Road · Suite 500 · Dallas, TX 75240

Fax

To:	Utah Oil & Gas	**From:**	Karla Stines
Fax:	801.359.3940	**Fax:**	972.701.0351
Phone:		**Phone:**	972.628.1658
Re:	Verbal Approval	**C:**	
Date:	3/8/2004	**Pages:**	3 (Including Cover Page)

☑ **Urgent** ☐ **For Review** ☐ **Please Comment** ☐ **Please Reply** ☐ **Please Recycle**

• **Comments:**

Attached for your review & verbal approval are sundry notices for the:

ARE W 21-04
ARE W 20-06

Contingent on approval, work could begin as early as Tuesday, March 9, 2004.

Once the verbal approval of the sundries has been received, we will FedEx the original & required copies for Wednesday delivery to Utah Division Oil, Gas and Mining.

Should you have any questions, please advise.

Kindest regards, Karla

STATE OF UTAH
DEPARTMENT OF NATURAL RESOURCES
DIVISION OF OIL, GAS AND MINING

FORM 9

SUNDRY NOTICES AND REPORTS ON WELLS

Do not use this form for proposals to drill new wells, significantly deepen existing wells below current bottom-hole depth, reenter plugged wells, or to drill horizontal laterals. Use APPLICATION FOR PERMIT TO DRILL form for such proposals.

5. LEASE DESIGNATION AND SERIAL NUMBER: FEE
6. IF INDIAN, ALLOTTEE OR TRIBE NAME:
7. UNIT or CA AGREEMENT NAME:
1. TYPE OF WELL: OIL WELL ☐ GAS WELL ☑ OTHER
8. WELL NAME and NUMBER: ARE W 20-06
2. NAME OF OPERATOR: Merit Energy Company
9. API NUMBER: 4304330159
3. ADDRESS OF OPERATOR: 13727 Noel Ste 500 CITY Dallas STATE TX ZIP 75240
PHONE NUMBER: (972) 628-1658
10. FIELD AND POOL, OR WILDCAT: ARE / Nugget
4. LOCATION OF WELL
FOOTAGES AT SURFACE: ~~1324' FSL & 1722' FEL~~ 1291' FNL 936' FWL
COUNTY: Summit
QTR/QTR, SECTION, TOWNSHIP, RANGE, MERIDIAN: ~~SWSE~~ NWNW ~~26~~ 20 4N ~~7~~ 8E
STATE: UTAH

11. CHECK APPROPRIATE BOXES TO INDICATE NATURE OF NOTICE, REPORT, OR OTHER DATA

TYPE OF SUBMISSION	TYPE OF ACTION		
☑ NOTICE OF INTENT (Submit in Duplicate)	☐ ACIDIZE	☐ DEEPEN	☐ REPERFORATE CURRENT FORMATION
Approximate date work will start:	☐ ALTER CASING	☐ FRACTURE TREAT	☐ SIDETRACK TO REPAIR WELL
3/9/2004	☐ CASING REPAIR	☐ NEW CONSTRUCTION	☐ TEMPORARILY ABANDON
	☐ CHANGE TO PREVIOUS PLANS	☐ OPERATOR CHANGE	☐ TUBING REPAIR
	☑ CHANGE TUBING	☐ PLUG AND ABANDON	☐ VENT OR FLARE
☐ SUBSEQUENT REPORT (Submit Original Form Only)	☐ CHANGE WELL NAME	☐ PLUG BACK	☐ WATER DISPOSAL
Date of work completion:	☑ CHANGE WELL STATUS	☑ PRODUCTION (START/RESUME)	☐ WATER SHUT-OFF
	☐ COMMINGLE PRODUCING FORMATIONS	☐ RECLAMATION OF WELL SITE	☐ OTHER:
	☐ CONVERT WELL TYPE	☐ RECOMPLETE - DIFFERENT FORMATION	

12. DESCRIBE PROPOSED OR COMPLETED OPERATIONS. Clearly show all pertinent details including dates, depths, volumes, etc.

Merit Energy Company proposes to reactivate the above shut-in well as follows:

MIRU. Set tanks, flowlines & kill lines. Blow well down to pit & control w/4% KCL as needed. ND WH. NU BOP. PU on tbg to rls R-3 pkr. TOH & stand back 3-1/2" tbg. TIH w/5.5" bladed bit & scraper to PBTD @ 13886'. Rotate thru perfs. TOH & LD 3-1/2" tbg. RU WL. RIH w/GR to PBTD. RIH w/pulsed neutron log from PBTD to intermediate csg @ 10079'. TIH w/RBP & two pkrs on 2-7/8" tbg to isolate Nugget intervals. RU swab rig for extened swab testing of multiple Nugget intervals. RU workover rig. Rls & retrieve tools. TOH. RU WL. RIH & perf 13130-13220', 13310-70' 13650-13700' w/4 spf. TIH w/production tbg. Set pkr @ +/- 12990'. ND BOP. NU WH. RWTP. RDMO.

NAME (PLEASE PRINT) Karla Stines
TITLE Regulatory Analyst
SIGNATURE
DATE 3/8/2004

(This space for State use only)

APPROVED BY THE STATE OF UTAH DIVISION OF OIL, GAS, AND MINING
DATE 3/9/2004
BY:

COPY SENT TO OPERATOR
Date: 3-11-04
Initials: CHD

(5/2000) (See Instructions on Reverse Side)

STATE OF UTAH
DEPARTMENT OF NATURAL RESOURCES
DIVISION OF OIL, GAS AND MINING

FORM 9

SUNDRY NOTICES AND REPORTS ON WELLS

Do not use this form for proposals to drill new wells, significantly deepen existing wells below current bottom-hole depth, reenter plugged wells, or to drill horizontal laterals. Use APPLICATION FOR PERMIT TO DRILL form for such proposals.

5. LEASE DESIGNATION AND SERIAL NUMBER:

6. IF INDIAN, ALLOTTEE OR TRIBE NAME:

7. UNIT or CA AGREEMENT NAME:

1. TYPE OF WELL: OIL WELL ☐ GAS WELL ☑ OTHER

8. WELL NAME and NUMBER: ARE W 20-06

2. NAME OF OPERATOR: Merit Energy Company

9. API NUMBER: 4304330159

3. ADDRESS OF OPERATOR: 13727 Noel Ste 500 CITY Dallas STATE TX ZIP 75240 PHONE NUMBER: (972) 628-1658

10. FIELD AND POOL, OR WILDCAT: ARE / Nugget

4. LOCATION OF WELL

FOOTAGES AT SURFACE: 1324' FSL & 1722' FEL COUNTY: Summit

QTR/QTR, SECTION, TOWNSHIP, RANGE, MERIDIAN: SWSE ~~26~~ 20 4N ~~7~~ 9E STATE: UTAH

11. CHECK APPROPRIATE BOXES TO INDICATE NATURE OF NOTICE, REPORT, OR OTHER DATA

TYPE OF SUBMISSION	TYPE OF ACTION		
☑ NOTICE OF INTENT (Submit in Duplicate)	☐ ACIDIZE	☐ DEEPEN	☐ REPERFORATE CURRENT FORMATION
Approximate date work will start:	☐ ALTER CASING	☐ FRACTURE TREAT	☐ SIDETRACK TO REPAIR WELL
3/9/2004	☐ CASING REPAIR	☐ NEW CONSTRUCTION	☐ TEMPORARILY ABANDON
	☐ CHANGE TO PREVIOUS PLANS	☐ OPERATOR CHANGE	☐ TUBING REPAIR
	☑ CHANGE TUBING	☐ PLUG AND ABANDON	☐ VENT OR FLARE
☐ SUBSEQUENT REPORT (Submit Original Form Only)	☐ CHANGE WELL NAME	☐ PLUG BACK	☐ WATER DISPOSAL
Date of work completion:	☑ CHANGE WELL STATUS	☑ PRODUCTION (START/RESUME)	☐ WATER SHUT-OFF
	☐ COMMINGLE PRODUCING FORMATIONS	☐ RECLAMATION OF WELL SITE	☐ OTHER:
	☐ CONVERT WELL TYPE	☐ RECOMPLETE - DIFFERENT FORMATION	

12. DESCRIBE PROPOSED OR COMPLETED OPERATIONS. Clearly show all pertinent details including dates, depths, volumes, etc.

Merit Energy Company proposes to reactivate the above shut-in well as follows:

MIRU. Set tanks, flowlines & kill lines. Blow well down to pit & control w/4% KCL as needed. ND WH. NU BOP. PU on tbg to rls R-3 pkr. TOH & stand back 3-1/2" tbg. TIH w/5.5" bladed bit & scraper to PBTD @ 13886'. Rotate thru perfs. TOH & LD 3-1/2" tbg. RU WL. RIH w/GR to PBTD. RIH w/pulsed neutron log from PBTD to intermediate csg @ 10079'. TIH w/RBP & two pkrs on 2-7/8" tbg to isolate Nugget intervals. RU swab rig for extened swab testing of multiple Nugget intervals. RU workover rig. Rls & retrieve tools. TOH. RU WL. RIH & perf 13130-13220', 13310-70' 13650-13700' w/4 spf. TIH w/production tbg. Set pkr @ +/- 12990'. ND BOP. NU WH. RWTP. RDMO.

Verbal approval by Dustin Doucet on 3/9/04.

NAME (PLEASE PRINT) Karla Stines TITLE Regulatory Analyst

SIGNATURE Karla Stines DATE 3/8/2004

RECEIVED
MAR 1 1 2004
DIV. OF OIL, GAS & MINING

(This space for State use only)

(5/2000) (See Instructions on Reverse Side)

FORM 9

STATE OF UTAH
DEPARTMENT OF NATURAL RESOURCES
DIVISION OF OIL, GAS AND MINING

5. LEASE DESIGNATION AND SERIAL NUMBER: Fee

SUNDRY NOTICES AND REPORTS ON WELLS

6. IF INDIAN, ALLOTTEE OR TRIBE NAME:

7. UNIT or CA AGREEMENT NAME:

Do not use this form for proposals to drill new wells, significantly deepen existing wells below current bottom-hole depth, reenter plugged wells, or to drill horizontal laterals. Use APPLICATION FOR PERMIT TO DRILL form for such proposals.

1. TYPE OF WELL: OIL WELL ☐ GAS WELL ☑ OTHER

8. WELL NAME and NUMBER: ARE W 20-06

2. NAME OF OPERATOR: Merit Energy Company

9. API NUMBER: 4304330159

3. ADDRESS OF OPERATOR: 13727 Noel Ste 500 CITY Dallas STATE TX ZIP 75240

PHONE NUMBER: (972) 628-1658

10. FIELD AND POOL, OR WILDCAT: Anschutz Ranch East / Nugget

4. LOCATION OF WELL

FOOTAGES AT SURFACE: 1291 FNL 0936 FWL

COUNTY: Summit

QTR/QTR, SECTION, TOWNSHIP, RANGE, MERIDIAN: NWNW 20 04N 08E S

STATE: UTAH

11. CHECK APPROPRIATE BOXES TO INDICATE NATURE OF NOTICE, REPORT, OR OTHER DATA

TYPE OF SUBMISSION	TYPE OF ACTION		
☐ NOTICE OF INTENT (Submit in Duplicate)	☑ ACIDIZE	☐ DEEPEN	☐ REPERFORATE CURRENT FORMATION
Approximate date work will start:	☐ ALTER CASING	☐ FRACTURE TREAT	☐ SIDETRACK TO REPAIR WELL
	☐ CASING REPAIR	☐ NEW CONSTRUCTION	☐ TEMPORARILY ABANDON
	☐ CHANGE TO PREVIOUS PLANS	☐ OPERATOR CHANGE	☐ TUBING REPAIR
	☑ CHANGE TUBING	☐ PLUG AND ABANDON	☐ VENT OR FLARE
☑ SUBSEQUENT REPORT (Submit Original Form Only)	☐ CHANGE WELL NAME	☐ PLUG BACK	☐ WATER DISPOSAL
Date of work completion:	☐ CHANGE WELL STATUS	☑ PRODUCTION (START/RESUME)	☐ WATER SHUT-OFF
	☐ COMMINGLE PRODUCING FORMATIONS	☐ RECLAMATION OF WELL SITE	☐ OTHER:
	☐ CONVERT WELL TYPE	☐ RECOMPLETE - DIFFERENT FORMATION	

12. DESCRIBE PROPOSED OR COMPLETED OPERATIONS. Clearly show all pertinent details including dates, depths, volumes, etc.

Merit Energy Company performed the following work:

3/10-6/21/04: MIRU. ND WH. NU BOP. RU lines to test csg & pkr. Pumped 70 bbls 4% KCL. Unseat pkr. TOH w/3-1/2" tbg. Chg'd rams to 2-7/8". TIH w/bit & scraper. Tagged @ 13848'. TOH. TIH w/RBP & pkr. Set RBP @ 12890'. RU Sanjel N2. Tested RBP & csg fr/12890 to surf - ok. TOH. RU Computalog. Run Pulse Neutron Decay log. Tagged @ 13823' (PBTD). TIH. Set RBP @ 13803'. Set bttm pkr @ 13670'. RU swab equip. Swabbed well. RU WL. TIH w/GR to 13655'. TIH w/plug in XN nipple to isolate lower zones. Set plug. RU hot oil truck. Pressured up to 1000 psi on tbg & plug to set hydraulic pkr @ 13355'. TIH w/shifting tool & open sliding sleeve @ 13400'. With plug in place & sliding sleeve open this opens up perfs fr/13370-13650'. Swabbed well. RU BJ. Tested lines to 3000 psi. Treated perfs fr/13370-13650' w/2000 gals 15% acid w/chemicals added. Flushed w/3387 gals treated wtr. Swabbed well. Fished plug, closed sliding sleeve, tested next zone. Swabbed well. Tried to fish pkr. No luck. Pushed pkr to 13791'. TIH w/CIBP. Set @ 14220'. TOC @ 13210'. TIH w/7-5/8" pkr. Set @ 12858'. Land hanger. Pumped pkr fluid. Press tested to 500 psi - good. ND BOP. NU WH. Cleared location. Swabbed well. Pumped 2000 gals 15% acid w/chemical added. Flushed w/3387 gals treated wtr. Swabbed well. ND BOP. NU WH. RDMO.

NAME (PLEASE PRINT): Karla Stines

TITLE: Regulatory Analyst

SIGNATURE: Karla Stines

DATE: 4/19/2005

(This space for State use only)

RECEIVED
APR 29 2005
DIV. OF OIL, GAS & MINING

(5/2000)

(See Instructions on Reverse Side)

State of Utah
DEPARTMENT OF NATURAL RESOURCES

MICHAEL R. STYLER
Executive Director

Division of Oil, Gas and Mining

JOHN R. BAZA
Division Director

JON M. HUNTSMAN, JR.
Governor

GARY R. HERBERT
Lieutenant Governor

August 26, 2008

CERTIFIED MAIL NO. 7004 2510 0004 1824 6053

Mr. Michael Mercer
Merit Energy Company
13727 Noel Road, Suite 500
Dallas, TX 75240

43 043 30159
ARE W20-06
4N 8E 20

Re: **Third Notice** of Extended Shut-in and Temporarily Abandoned Well Requirements for Fee or State Leases

Dear Mr. Mercer:

As of July 2008, Merit Energy Company has fifteen (15) Fee Lease Wells that are in non-compliance with the requirements for extended shut-in or temporarily abandoned (SI/TA) status (see attachment A). All wells SI/TA beyond twelve (12) consecutive months require the filing of a Sundry Notice in accordance with R649-3-36-1 for Utah Division of Oil, Gas & Mining ("Division") approval. Wells with five (5) years non-activity or non-productivity shall be plugged, unless the Division grants approval for extended shut-in time upon a showing of good cause by the operator (R649-3-36-1.3.3).

On January 22, 2004 the Division notified Merit by certified mail 24 wells were on the SI/TA list. Merit responded by letters of February 13, 2004, November 10, 2004, and January 5, 2005, with evaluation plans for each of the 24 wells. By the time an extension of SI/TA status was granted to Merit by the Division on April 8, 2005, six of the original 24 wells had been returned to production.

To date, 10 of the original 24 wells remain as SI/TA. Two wells were producing briefly in 2005 but have since returned to SI/TA status. These wells are listed as number 8 and number 10 on Attachment A. Two additional wells (ARE W36-08 API# 43-043-30167 & ARE 29-04 ST1 API# 43-043-30129) were producing briefly for 3 months in 2007, but are now showing as SI, and will soon be added to this list.

Five (5) new wells have been added to the current list. These are the wells numbered 11 through 15 on Attachment A

Please submit your plans to produce or plug these wells to DOGM within 30 days of this notice or a Notice of Violation (NOV) will be issued.

For extended SI/TA consideration of each well on the SI/TA list, the operator shall provide the Division with the following:

1. Reasons for SI/TA of the well (R649-3-36-1.1).
2. The length of time the well is expected to be SI/TA (R649-3-36-1.2), and
3. An explanation and supporting data if necessary, showing the well has integrity, meaning that the casing, cement, equipment condition, static fluid level, pressure, existence/or absence of Underground Sources of Drinking Water, and other factors do not make the well a risk to public health and safety or the environment (R649-3-36-1.3).

Submitting the information suggested below may help show well integrity and may help qualify your well for extended SI/TA. **Note: As of July 1, 2003, wells in violation of the SI/TA rule R649-3-36 may be subject to full cost bonding (R649-3-1-4.2, 4.3).**

1. Wellbore diagram, and
2. Copy of recent casing pressure test, and
3. Current pressures on the wellbore (tubing pressure, casing pressure, and casing/casing annuli pressure) showing wellbore has integrity, and
4. Fluid level in the well bore, and
5. An explanation of how the submitted information proves integrity.

If the required information is not received within 30 days of the date of this notice, further actions will be initiated. If you have any questions concerning this matter, please contact me at (801) 538-5281.

Sincerely,

Dustin K. Doucet
Petroleum Engineer

JP/js
Attachment
cc: Well File
Operator Compliance File

ATTACHMENT A

	Well Name	API	Lease Type	Years Inactive
1	CHAMPLIN 387 B1A	43-043-30168	Fee	14 Years 3 Months
2	ARE W16-12	43-043-30231	Fee	12 Years 11 Months
3	ARE W16-14	43-043-30096	Fee	12 Years 9 Months
4	ARE W31-12	43-043-30190	Fee	11 Years 11 Months
5	ARE W31-04E	43-043-30165	Fee	5 Years 10 Months
6	CHAMPLIN 372 AMOCO C 1	43-043-30143	Fee	6 Years 8 Months
7	ARE W16-06	43-043-30138	Fee	3 Years 1 Month
8	ARE W20-06	43-043-30159	Fee	2 Years 10 Months
9	ARE W17-16	43-043-30176	Fee	1 Year 9 Months
10	ARE W20-02	43-043-30228	Fee	2 Years 0 Months
Newly Added				
11	ARE W20-12	43-043-30220	Fee	2 Years 3 Months
12	ARE W31-06	43-043-30217	Fee	1 Year 5 Months
13	ARE W31-08	43-043-30164	Fee	1 Year 6 Months
14	ARE W36-16	43-043-30157	Fee	1 Year 3 Months
15	ARE E28-06	43-043-30226	Fee	1 Year 1 Month

FORM 9

STATE OF UTAH
DEPARTMENT OF NATURAL RESOURCES
DIVISION OF OIL, GAS AND MINING

5. LEASE DESIGNATION AND SERIAL NUMBER: FEE

SUNDRY NOTICES AND REPORTS ON WELLS

6. IF INDIAN, ALLOTTEE OR TRIBE NAME:

7. UNIT or CA AGREEMENT NAME:

Do not use this form for proposals to drill new wells, significantly deepen existing wells below current bottom-hole depth, reenter plugged wells, or to drill horizontal laterals. Use APPLICATION FOR PERMIT TO DRILL form for such proposals.

1. TYPE OF WELL: OIL WELL ☐ GAS WELL ☑ OTHER

8. WELL NAME and NUMBER: ARE W20-06

2. NAME OF OPERATOR: Merit Energy Company

9. API NUMBER: 4304330159

3. ADDRESS OF OPERATOR: 13727 Noel Road, Suite 500 CITY Dallas STATE TX ZIP 75240

PHONE NUMBER: (972) 628-1658

10. FIELD AND POOL, OR WILDCAT: Anschutz Ranch East

4. LOCATION OF WELL

FOOTAGES AT SURFACE: 1291' FNL 936' FWL 6th P.M.

COUNTY: Summit

QTR/QTR, SECTION, TOWNSHIP, RANGE, MERIDIAN: NWNW 20 T4N R8E

STATE: UTAH

11. CHECK APPROPRIATE BOXES TO INDICATE NATURE OF NOTICE, REPORT, OR OTHER DATA

TYPE OF SUBMISSION	TYPE OF ACTION		
☑ NOTICE OF INTENT (Submit in Duplicate)	☐ ACIDIZE	☐ DEEPEN	☐ REPERFORATE CURRENT FORMATION
Approximate date work will start:	☐ ALTER CASING	☐ FRACTURE TREAT	☐ SIDETRACK TO REPAIR WELL
	☐ CASING REPAIR	☐ NEW CONSTRUCTION	☐ TEMPORARILY ABANDON
	☐ CHANGE TO PREVIOUS PLANS	☐ OPERATOR CHANGE	☐ TUBING REPAIR
	☐ CHANGE TUBING	☐ PLUG AND ABANDON	☐ VENT OR FLARE
☐ SUBSEQUENT REPORT (Submit Original Form Only)	☐ CHANGE WELL NAME	☐ PLUG BACK	☐ WATER DISPOSAL
Date of work completion:	☐ CHANGE WELL STATUS	☐ PRODUCTION (START/RESUME)	☐ WATER SHUT-OFF
	☐ COMMINGLE PRODUCING FORMATIONS	☐ RECLAMATION OF WELL SITE	☑ OTHER: Continuation of SI status
	☐ CONVERT WELL TYPE	☐ RECOMPLETE - DIFFERENT FORMATION	

12. DESCRIBE PROPOSED OR COMPLETED OPERATIONS. Clearly show all pertinent details including dates, depths, volumes, etc.

Merit Energy Company Requests to keep the aforementioned well in SI status pending ability to perform a workover on the well. Please see attached documentation including planned workover for future utility and an explanation of work and casing integrity.

COPY SENT TO OPERATOR
Date: 6·4·2009
Initials: KS

NAME (PLEASE PRINT) Michal Karam White TITLE Regulatory Anlayst

SIGNATURE DATE 4/13/2009

(This space for State use only)

REQUEST DENIED
Utah Division of
Oil, Gas and Mining
Date: 6/3/09
By:

RECEIVED
APR 22 2009
DIV. OF OIL, GAS & MINING

(5/2000) (See Instructions on Reverse Side)

* MIT required for extended SI/TA consideration
** Sundry for change of lift system/recompletion may be submitted seperately for approval

ARE W20-06
Sec. 20-T4N-R8E
Summit County, Utah
API #43-043-30159
4/9/2009

Drill Out CIBP & Install Reverse Gas Lift

Well Data

Tubing:	2-7/8", 6.5#, N-80
Casing:	6-5/8" & 7", 27 & 32#, N-80 & P-110 @ 14,163'
TD:	14,163'
PBTD:	13,791'
Elevation:	7,559' KB 7,534' GL

Packer @ 12,898'

Open Perforations:
Nugget 13,008' – 13,038', 13,046' – 13,064', 13,092' – 13,115', 13,230' – 13,310', 13,370' – 13,392', 13,418' – 13,446', 13,470' – 13,490', 13,514' – 13,533', 13,556' – 13,580', 13,606' – 13,618', 13,628' – 13,650', 13,680' – 13,708', 13,716' – 13,726', 13,736' – 13,746', 13,772' – 13,800', 13,830' – 13,860'

CIBP @ 13,220' w/ 10' cement on top

Squeezed Perforations:
Nugget 13,135' – 13,215', 13,310' – 13,346', 13,910' – 13,930', 13,966' – 13,990'

Procedure

1. RU slickline. RIH with memory pressure and temperature recorders for static survey. POH making static gradient stops per Altec's recommendations. RD slickline. Send data to Altec for reverse gas lift design.
2. MIRU PU. ND WH. NU BOP. Release packer. TOH laying down 2-7/8" production tubing.
3. If unable to release packer, RU WL. RIH with guage ring for chemical cutter. POH. RIH with chemical cutter and cut tubing at 12,890'. POH. RD WL. TOH laying down 2-7/8" production tubing.
4. PU overshot, jars, and 2-7/8" P-110 workstring. TIH and latch onto fish. Jar packer free. TOH. Lay down fishing tools and packer.
5. PU 5-3/8" bit and bailer and 2-7/8" workstring. TIH and knock out CIBP. Chase to bottom. TOH w/ 2-7/8" workstring lying down.
6. PU and TIH with 3-1/2" and 2-7/8" reverse gas lift set according to design (do not run until wellhead and surface work are done). Band 1/4" cap string to 13,000'.

7. ND BOP. NU WH. Kick the well up with gas lift. RDMO PU.

Contacts

Foreman: Don Baucum (307) 380-8300
Operations Manager: Bruce Vargo (307) 320-5113
Operations Engineer: Nick Tunnell (972) 628-1084

Explanation of Work and Casing Integrity

Due to the current pricing environment, the proposed project is currently uneconomical. However, as prices come up at a future point and time and as Merit is able to lower operating costs, Merit is confident that the proposed project is still a viable project and there is future utility for the wellbore. Attached is a proposed procedure to open up additional perforations and install reverse gas lift to unload the well. Merit selectively swab tested different intervals in the subject in 2004, but due to unexpected fishing operations and costs, Merit did not complete the workover to reactivate the well at the time.

In 2004, the casing in the subject well was pressure tested to 500 psi and tested good. Currently, there is no pressure on the tubing or casing, giving no indication that there is potential concern in regards to the casing integrity.

WELL NAME: **ARE W20-06**

COUNTY:	SUMMIT	ST:	UT	FIELD:	Anschutz	TD:	14,163
QTR QTR:		SEC:	20	API #:	43-043-30159	PBTD:	14,051'
UPDATED:	04/07/09	TWN:	4N	SPUD DATE:	05/19/81	KB:	7,559'
UPDATED BY:	NICK TUNNELL	RNG:	8E	MAX TEMP:	188 °F	GL:	7,534'

MERIT ENERGY COMPANY

CASING DETAILS

PURPOSE	TOC	CMT	SIZE	WEIGHT	GRADE	SET DEPTH
SURFACE		3810 SX	13-1/2" & 13-3/8"	61, 72, 81.4#	S-95, S-80, N-80	5,411'
INTERMEDIATE		950 SX	9-5/8" & 9-7/8"	43.5, 47, 62.8#	S-95	11,330'
PRODUCTION		650 SX	6-5/8" & 7"	27 & 32#	N-80 & P-110	14,163'

TUBING DETAILS

DESCRIPTION	SIZE	WEIGHT	GRADE	SET DEPTH
TUBING	2-7/8"	6.5#	N-80	
PACKER				12,898'
X NIPPLE				
1 JT TUBING				
X NIPPLE				
1 JT TUBING				
WL REENTRY GUIDE				

Based on pull-run dated 6/2/2004

PERFORATIONS

DATE	TOP	BOTTOM	GROSS	HOLES	SPF
7/7/1992	**13,008'**	**13,038'**	**30'**	120	4
7/7/1992	**13,046'**	**13,064'**	**18'**	72	4
7/7/1992	**13,092'**	**13,115'**	**23'**	92	4
9/6/1983	*13,135'*	*13,215'*	*80'*	320	4
3/25/1996	**13,230'**	**13,310'**	**80'**	320	4
10/11/1983	*13,248'*	*13,268'*	*20'*	80	4
10/10/1982	*13,292'*	*13,346'*	*54'*	216	4
8/19/1986	**13,370'**	**13,392'**	**22'**	88	4
8/19/1986	**13,418'**	**13,446'**	**28'**	112	4
8/19/1986	**13,470'**	**13,490'**	**20'**	80	4
8/19/1986	**13,514'**	**13,533'**	**19'**	38	2
10/5/1982	**13,556'**	**13,580'**	**24'**	96	4
10/11/1983	**13,606'**	**13,618'**	**12'**	24	2
3/3/1982	**13,628'**	**13,650'**	**22'**	44	2
3/25/1996	**13,680'**	**13,700'**	**20'**	80	4
9/30/1982	**13,699'**	**13,708'**	**9'**	36	4
9/30/1982	**13,716'**	**13,726'**	**10'**	40	4
9/30/1982	**13,736'**	**13,746'**	**10'**	40	4
9/30/1982	**13,772'**	**13,800'**	**28'**	112	4
9/30/1982	**13,830'**	**13,860'**	**30'**	120	4
2/8/1982	*13,910'*	*13,930'*	*20'*	40	2
2/1/1982	*13,966'*	*13,990'*	*24'*	48	2

FORMATION TOPS	
ASPEN	
BEAR RIVER	
GANNET	
PREUSS	
TWIN CREEK	
WATTON CANYON	
BOUNDRY RIDGE	
RICH	
SLIDE ROCK	
GYPSUM SPRING	
NUGGET	
ANKAREH	

NOTES: **6-5/8" CASING FROM 10,079' - 14,163'.**

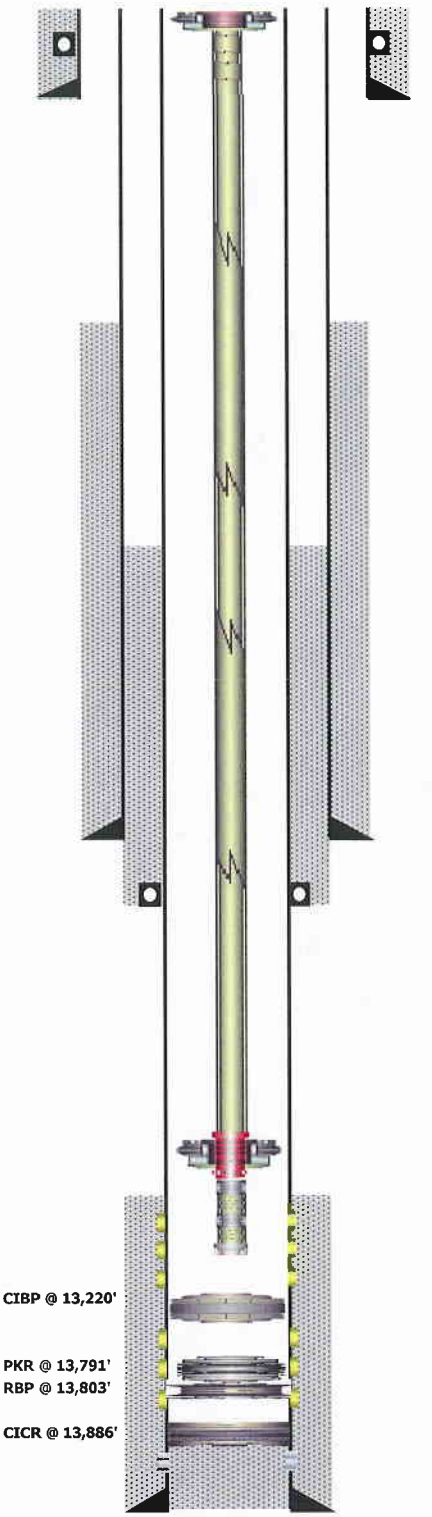

DV TOOL. 13-3/8" @ 2491', 7" @ 10048'

JON M. HUNTSMAN, JR.
Governor

GARY R. HERBERT
Lieutenant Governor

State of Utah
DEPARTMENT OF NATURAL RESOURCES

MICHAEL R. STYLER
Executive Director

Division of Oil Gas and Mining

JOHN R. BAZA
Division Director

January 21, 2009

Mr. Nicholas Tunnell
Merit Energy Company
13727 Noel Road, Suite 500
Dallas, TX 75240

43 043 30159
ARE W20-06
4N 8E 20

Subject: Extended Shut-in and Temporary Abandoned Well Requirements for Fee or State Leases dated August 26, 2008.

Dear Mr. Tunnell:

The Division of Oil, Gas and Mining (the Division) is in receipt of your letter dated October 17, 2008 in regards to the fifteen (15) shut-in or temporarily abandoned (SI/TA) Fee Lease Wells (Attachment A) operated by Merit Energy Company (Merit).

The Division does not object to the proposed work on the said wells. Several of the wells listed look as though they may have integrity. However, due to insufficient evidence the Division is unable to grant extended SI/TA status for these wells. Not enough data was received per R649-3-36 providing proof of integrity or lengths of time wells are expected to be shut-in. The Divisions preferred method of demonstrating well integrity is to perform an MIT. Please submit the necessary information to bring these wells back into compliance. Please note, approval will be necessary prior to continuing with the planned work for these wells.

Please submit an individual sundry for each well along with required information to help expedite approval and documentation processes. If the required information is not received within 30 days of the date of this notice, further actions may be initiated. If you have any questions concerning this matter, please contact me at (801) 538-5281.

Sincerely,

Dustin K. Doucet
Petroleum Engineer

DKD/JP/js
Enclosure
cc: Well Files
Compliance File
N:\O&G Reviewed Docs\ChronFile\PetroleumEngineer\SITA

ATTACHMENT A

	Well Name	API	Lease Type	Years Inactive
1	CHAMPLIN 387 B1A	43-043-30168	Fee	14 Years 3 Months
2	ARE W16-12	43-043-30231	Fee	12 Years 11 Months
3	ARE W16-14	43-043-30096	Fee	12 Years 9 Months
4	ARE W31-12	43-043-30190	Fee	11 Years 11 Months
5	ARE W31-04E	43-043-30165	Fee	5 Years 10 Months
6	CHAMPLIN 372 AMOCO C 1	43-043-30143	Fee	6 Years 8 Months
7	ARE W16-06	43-043-30138	Fee	3 Years 1 Month
8	ARE W20-06	43-043-30159	Fee	2 Years 10 Months
9	ARE W17-16	43-043-30176	Fee	1 Year 9 Months
10	ARE W20-02	43-043-30228	Fee	2 Years 0 Months
11	ARE W20-12	43-043-30220	Fee	2 Years 3 Months
12	ARE W31-06	43-043-30217	Fee	1 Year 5 Months
13	ARE W31-08	43-043-30164	Fee	1 Year 6 Months
14	ARE W36-16	43-043-30157	Fee	1 Year 3 Months
15	ARE E28-06	43-043-30226	Fee	1 Year 1 Month

MERIT ENERGY COMPANY

13727 Noel Road · Suite 500 · Dallas, Texas 75240
Ph 972.701.8377 · Fx 972.960.1252 · www.meritenergy.com

October 17, 2008

State of Utah – Department of Natural Resources
Division of Oil, Gas, & Mining
Attn: Mr. Dustin Doucet
PO Box 145801
Salt Lake City, UT 84114-5801

Dear Mr. Doucet:

In response to your letter dated August 26, 2008, I would like to submit the attached supporting documentation regarding our extended shut-in wells.

Enclosed, please find a summary sheet with Merit Energy Company's future plans for each of the wells listed in your letter, a sheet with explanations and supporting data showing each well's integrity, as well as wellbore diagrams for the subject wells.

If you have any questions or wish to discuss this further, please contact me at (972) 628-1084 or electronically at nick.tunnell@meritenergy.com.

Sincerely,

Nicholas R. Tunnell

Nicholas R. Tunnell
Operations Engineer
Merit Energy Company

UTAH DOGM – SI WELL LIST

Last Work	Integrity	circa 2004	
	NP	✓ •	**CHAMPLIN 387 B1A** – Plan to P&A well in March 2009 due to availability of rig. Bridge broken, missing valves
3/95	OK	✓ •	**ARE W16-12** – Plan to run slickline to verify PBTD, swab test Nugget to evaluate potential, if unsuccessful, will attempt a Twin Creek completion.
	?	✓ •	**ARE W16-14** – Plan to run slickline to verify PBTD, swab test Nugget to evaluate potential, if unsuccessful, will attempt a Twin Creek completion.
1/04		✓ •	**ARE W31-12** – Plan to swab test the Nugget, if unsuccessful, will attempt a Twin Creek completion.
11/99	✓	✓ •	**ARE W31-04** – Plan to swab test Nugget, if unsuccessful, will attempt a Twin Creek completion.
2001	OK	✓ •	**CHAMPLIN 372 C1** – Swabbed in October 2004. Swab results were encouraging. There are no production facilities or flowlines in place. Merit is in the process of trying to buy a flowline in the area to tie into, at which point Merit will attempt to reactivate the well in the Nugget or attempt a Twin Creek completion. 4 1/2" liner run after patch ? Hole in csg @ 3612 csg patch
2001		✓ •	**ARE W16-06** – Ran ESP in the well, unsuccessful due to water volumes, will attempt a Twin Creek completion. 1 string tites spot @ 8000' to 8200'
2004	OK	✓ •	**ARE W20-06** – Tested upper zone of Nugget in 2004, unsuccessful, plan to drill out cement & CIBP and produce lower zone.
		✓ •	**ARE W17-16** – SI due to availability of gas lift gas, gas is available, plan to kick well off with gas lift, if unsuccessful, will attempt a Twin Creek completion.
2000		✓ •	**ARE W20-02** – Installed conventional gas lift, unsuccessful, plan to run survey to evaluate reverse gas lift potential, if unsuccessful, will attempt Twin Creek completion.
2003		•	**ARE W20-12** – Installed conventional gas lift, cycling gas, plan to run survey to evaluate reverse gas lift potential, if unsuccessful, will attempt Twin Creek completion.
2004	OK	•	**ARE W31-06** – Plan to install reverse gas lift to reactivate well, if unsuccessful, will attempt Twin Creek completion. 2 strings Tites spot @ 10416 (2001)
	NP	•	**ARE W31-08** – Rig on location, squeezed off casing leak, drilling out cement, plan to install reverse gas lift to reactivate well, if unsuccessful, will attempt Twin Creek completion. Tites spot @ 11095' to 11099'
	✓	•	**ARE W36-16** – Coil tubing gas lift design in the well, plan to pull the coil tubing and install reverse gas lift to reactivate well, if unsuccessful, will attempt Twin Creek completion. 2 strings
2005	OK	•	**ARE W28-06** – Collapsed casing at 12,678', will attempt a Twin Creek completion. collapse @ 12678 2 strings

UTAH DOGM – SI WELL LIST

Wells to be Reactivated in 2009

- ARE W16-12
  - Packer at 10,304
  - Top of cement (TOC) at 10,100 (9-5/8" casing)
  - Tubing Pressure 50#
  - Casing Pressure 0#
  - The packer is located below the TOC. The tubing pressure and casing pressure are different. Therefore, the casing and tubing are not in communication and the ground waters are protected.

Thg Csg
insp 2007 0 0
2006 0 0
2005 0 130
2004 100 0
2003 0 0

- ARE W16-14
  - Packer (PBR) at 10,500
  - Top of cement (TOC) at 9,650 (9-5/8" casing)
  - Tubing Pressure 1650#
  - Casing Pressure 850#
  - The tubing is tied into the 4-1/2" liner with a PBR at 10,500. This is below the TOC for the 9-5/8" casing string. The tubing pressure and casing pressure are different. Therefore, the casing and tubing are not in communication and the ground waters are protected.

2007 0 NA
2006 0 NA
2005 0 NA
2004 1500 250
2003 100 0
1990 4600 1575

- ARE W31-12
  - Packer at none
  - Top of cement (TOC) at 10,700
  - Casing Pressure 100#
  - Fluid Level 1000' from Surface
  - There is not a packer or tubing in this well. The static fluid level is 1000' from surface. There is a 13-3/8" casing string set at 2846', a 9-5/8" casing string set at 10272', and a 7" tie-back casing string set at 9919'. These three casing strings are protecting the ground waters.

2007 NA NA
2006 NA NA
2005 NA NA
2004 NA NA
2003 480 0

- ARE W31-04
  - Packer at 14,000
  - Top of cement (TOC) at 11,900
  - Tubing Pressure 1000#
  - Casing Pressure 0#
  - This well is a horizontal sidetrack. The primary cement job on the original production casing had a TOC at 11,900. The kick-off point for the horizontal leg is below this depth. Additionally, the drill string was cemented in the horizontal section with the TOC estimated to be between 13126 and 13310. Based on the fact that the tubing and casing pressures are different, the two are not in communication and therefore, the ground waters are protected.

2007 30 20
2006 150 0
2005 150 30
2004 1200 25
2003 0 0

- CHAMPLIN 372 C1
  - Packer at 8,320 (MD) 6,648 (TVD)
  - Top of cement (TOC) at 4,906
  - Tubing Pressure 0#
  - Casing Pressure 0#
  - The 4-1/2" liner is cemented in place at 5090 (below the TOC).

2007 0 0
2006 600 0
2005 0 0
2004 0 0
2003 0 0

- ARE W16-06
  - Packer at none
  - Top of cement (TOC) at 12,640
  - Casing Pressure 0#
  - When Merit set a packer in October 2004, we pressure tested the annulus to 500 psi and it held. Therefore, the casing has integrity and the ground waters are protected.

2007 NA NA
2006 NA NA
2004 NA NA
2003 0 0

- ARE W20-06
  - Packer at 12,858'
  - Top of cement (TOC) at 9,650' (9-5/8" casing)
  - Tubing Pressure 0#
  - Casing Pressure 0#
  - When Merit set the packer in June 2004, we pressure tested the annulus to 500 psi and it held. There is a 13-3/8" casing string set at 5411', a 9-5/8" casing string set at 11330',

2007 120 100
2006 220 250
2005 350 350
2004 NA 0
2003 0 0

UTAH DOGM – SI WELL LIST

and a 7" tie-back casing string set at 10079'. These three casing strings are protecting the ground waters.

- ARE W17-16
  - Packer 13,747'
  - Top of cement (TOC) at 10,371' (7-5/8" casing)
  - Tubing Pressure 78#
  - Casing Pressure 53#
  - There is a 13-3/8" casing string set at 2526', a 9-5/8" casing string set at 10701', and a 7" tie-back casing string set at 10237'. These three casing strings are protecting the ground waters.

2007	1180	1300
2006	0	1100
2005	0	80
2004	0	0
2003	0	0

- ARE W20-02
  - Packer at 12,646'
  - Top of cement (TOC) at 8,910' (7" casing)
  - Tubing Pressure 384#
  - Casing Pressure 310#
  - There is a 13-3/8" casing string set at 5140', a 9-5/8" casing string set at 10934', and a 7" casing string set at 13928'. These three casing strings are protecting the ground waters.

2007	464	500
2006	150	1200
2005	100	1150
2004	0	1000
2003	0	0
1990	5500	0

- ARE W20-12
  - Packer at 12,863'
  - Top of cement (TOC) at 10,372' (9-5/8" casing)
  - Tubing Pressure 912#
  - Casing Pressure 930#
  - There is a 13-3/8" casing string set at 5362', a 9-5/8" casing string set at 11245', and a 7" tie-back casing string set at 10109'. These three casing strings are protecting the ground waters.

2007	435	1050
2005	NA	680
2004	180	800
2003	0	0

No truck ok

- ARE W31-06
  - Packer at 10284'
  - Top of cement (TOC) at 9996' (7" casing)
  - Tubing Pressure 0#
  - Casing Pressure 0#
  - There is a 13-3/8" casing string set at 2301', a 9-5/8" casing string set at 10689', and a 7" casing string set at 14033'. These three casing strings are protecting the ground waters.

2007	0	NA
2006	250	NA
2005	0	425
2004	110	940
2003	200	920

- ARE W36-16
  - Packer (PBR) at 10,680
  - Top of cement (TOC) at 10,172 (7" casing)
  - Tubing Pressure 1357#
  - Casing Pressure 0#
  - The packer is located below the TOC. The tubing pressure and casing pressure are different. Therefore, the casing and tubing are not in communication and the ground waters are protected.

2007	1200	0
2006	250	0
2005	500	100
2004	250	0
2003	180	0

- ARE E28-06
  - Packer at none
  - Top of cement (TOC) at 11,900' (7" casing)
  - Tubing Pressure 0#
  - Casing Pressure 0#
  - There is a 13-3/8" casing string set at 3988', a 9-5/8" casing string set at 12990', and a 7" tie-back casing string set at 12313'. These three casing strings are protecting the ground waters.

2007	NA	0
2005	0	0
2004	180	0
2003	200	1350

ARE W31-08

2007	1220	NA
2005	0	0
2004	NA	0
2003	180	0

WELL NAME:	**ARE W16-12**			FIELD:	**ANSCHUTZ RANCH EAST**		
QTR QTR:		SEC:	**16**	TWN:	**4N**	RNG:	**8E**
COUNTY:	**SUMMIT**		ST:	**UT**	SPUD DATE:		
KB: **7387**	GL:	**7360**	TD:	**15112**	PBTD:	**13395**	
LAST UPDATED:	**10/11/04**		BY:	**MIKE MERCER**			

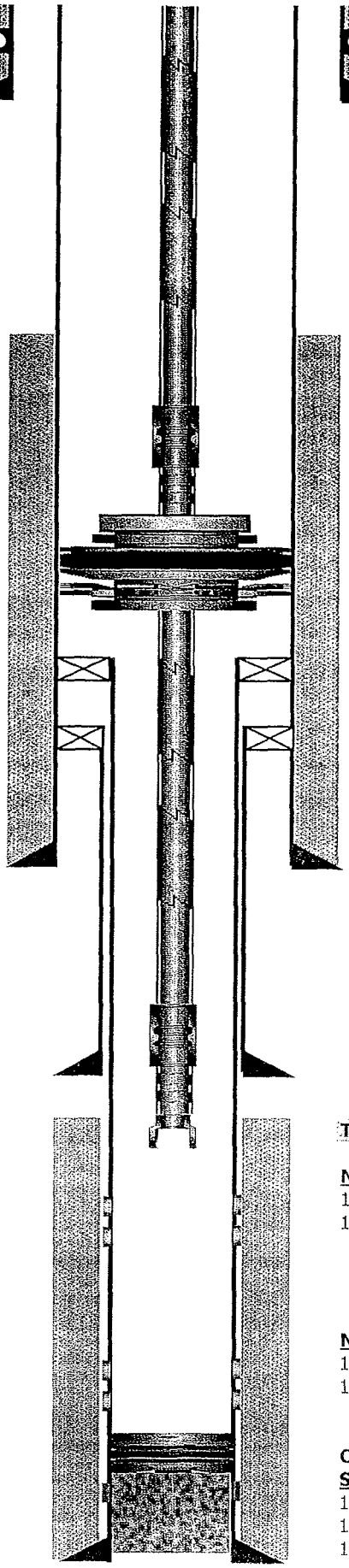

CASING DETAILS

PURPOSE	SIZE	WEIGHT	GRADE	SET DEPTH
SURFACE	13-3/8"	61-72#	S-80, HC-95	4862'
INTERMEDIATE	9-5/8", 9-7/8"	53.5-62.8#	S-95, S-105	11757'
INTERMEDIATE	7-5/8"	45.3#	P-110	F/10852-12102
PRODUCTION	5"	17.93#	P-110	F/10473-15105

TUBING DETAILS

DESCRIPTION	SIZE	WEIGHT	GRADE	SET DEPTH
KB				27.00
XO	3-1/2" X 2-7/8"			
229 JTS	2-7/8"	8.7#	PH-6	
XO				
89 JTS	2-7/8"	8.6#	L-80	
R-NIPPLE	2.215"			10,272.00
1 JT	2-7/8"	8.7#	L-80	
BAKER 51A2				10,304.00
XO	2-7/8" X 2-3/8"			
86 JTS	2-3/8"	4.7#	J-55 CS-HYDR	
XN NIPPLE	1.875" W/ 1.791			12,981.00
1 JT	2-3/8"	4.7#	J-55 CS-HYDR	
XO				
WL REENTRY				13,015.00

Based on 06/02/95 WBS

WELL HISTORY:

Apr-85	Sqz Z2, perf Z1 & Z2
Aug-86	Sqz upper Z1
Sep-86	Reperf lower Z1 & Z2
Jul-87	PLT run
Jul-89	Opened 9-5/8" casing
Sep-91	Re-sqzd and mechanically isolated upper Z1
May-95	Downsized f/ 3-1/2" to 2-3/8" tubing. Reperf Z1 & upper Z2

TOC @ 12890'

NUGGET PERFS
13130-156, 13166-181
13194-232, 13240-244

NUGGET PERFS
13252-264, 13275-313
13325-344, 13352-376

CICR @ 13420' w/ 25' cmt on top
SQZD PERFS
13394-474, 13480-520
13552-648, 13684-728
13738-750

DV TOOL. 13-3/8" @ 1992'

WELL NAME:	**ARE W16-14**				FIELD:	**ANSCHUTZ RANCH EAST**	
QTR QTR:		SEC:	**16**	TWN:	**4N**	RNG:	**8E**
COUNTY:	**SUMMIT**		ST:	**UT**	SPUD DATE:		
KB:	**7324**	GL:	**7305**	TD:	**14050**	PBTD:	**13516**
LAST UPDATED:		**10/08/04**		BY:		**MIKE MERCER**	

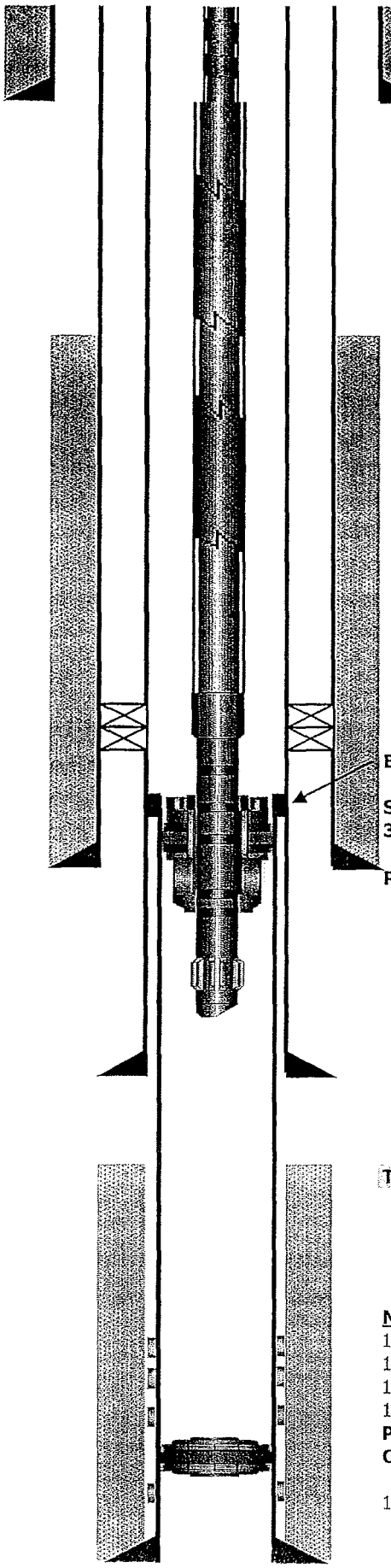

CASING DETAILS

PURPOSE	SIZE	WEIGHT	GRADE	SET DEPTH
SURFACE	13-3/8"	61-68#		2040'
INTERMEDIATE	9-5/8", 9-7/8"	40-62.8#		11091'
INTERMEDIATE	7-5/8"	39#		F/10331-11310
PRODUCTION	4-1/2"	13.5#	SS-95, P-110	F/10500-14045
PRODUCTION	7"	23-29#		F/0-10331

TUBING DETAILS

DESCRIPTION	SIZE	WEIGHT	GRADE	SET DEPTH
KB				19.00
1 JT	3-1/2"	12.7#	N-80 Vam	50.24
PUP JT	3-1/2"	12.7#	N-80 Vam	56.19
PUP JT	3-1/2"	12.7#	N-80 Vam	66.27
XO	3-1/2" X 4-1/2"			67.12
323 JTS	4-1/2"	12.7#	N-80 Hydril	10,493.23
XO	4-1/2" X 3-1/2"			10,494.00
Seal Assembly				10,511.20

Based on 04/07/85 Pulling Report

Baker Model A Simplex Hangar & Tie back sleeve

Size 80-40 Model G-22 Locator Seal Assembly. Landed w/ 6' out, 11' in
30,000# to pull out of PBR

PBR @ 10500'

WELL HISTORY:

TOC @ 11570'

NUGGET PERFS
12816-864, 12890-990
13016-076, 13100-180
13202-250, 13332-376
13400-464, 13500-515
PBTD 13516 (Fill)
CIBP @ 13630

14720-740

ANSCHUTZ RANCH EAST UNIT W31-12

Summit County, Utah
Location: 640' FWL & 1778' FNL Sec 31-T4N-R8E
Elevation: 7870' GL/ 7890' KB
Last Updated by LLT 2/12/2004

13-3/8" Surface Casing @ 2846'
61# J-55 STC (85')
48# H-40 STC (1112')
54.5# K-55 STC (826')
61#J-55 STC (845')
Cmtd w/ 3500 sxs 13.2 ppg 50/50 poz & 500 sxs 15.8 ppg class "G"

Production Tubing removed 1/6/04

7" Production Casing into Tie Back @ 9,919'
29# N-80 LTC (86')
23# SOO-95 LTC (5423')
23# S-95 LTC (513')
26# N-80 LTC (3303')
29# N-80 LTC (504')
Cmtd w/ 200 sxs 15.8 ppg class "G"

9-5/8"x4-1/2" TIW hydr hanger @ 9,927'
4" ID TIW PBR @ 9,937'
9-5/8"x7-5/8" TIW hydr hanger @ 10,030'

9-5/8" Intermediate Casing @ 10,272'
53.5# N-80 LTC (83')
43.5# N-80 LTC (520')
40# N-80 LTC (3608')
43.5# N-80 LTC (1606')
47# N-80 LTC (2204')
53.5# N-80 LTC (2191')
Cmtd w/ 500 sxs 14.2 ppg 50/50 poz & 300 sxs 15.8 ppg class "G"

TOC ?

7-5/8" Intermediate Liner @ 10,030-11,159'
45.3# P-110 FL4S
Cmtd w/ 600 sxs 16.1ppg class "G"

Nugget Sand Z1 & Z2 Perfs
12752-72, 12800-20, 12854-94, 12960-80, 13035-55, 13022-100, 13120-188

CIBP @13,202' w/ cmt to 13,190'

Nugget Sand Z3 Perfs
13210-72, 13294-402, 13426-94, 13520-78, 13640-720, 13760-850, 13872-956, 13980-98, 14048-141, 14168-270, 14292-326

4-1/2" Production Liner @ 9919-14418'
15.1# P-110 LTC
7"x4-1/2" TIW Tie Back Sleeve @ 9919'
9-5/8"x7-5/8" TIW hydraulic hanger @ 9927'
4" ID TIW polished bore recepticle @ 9937'
Cmt'd w/ 140 sxs 11.0 ppg Dowell "Hi Lift" & 170 sxs 9.0 ppg Amoco "Bubble" *(CBL shows poor bond)*

FISH
FISH
PBTD: 14,338'
TD: 14,418'

WELL HISTORY & NOTES
2/82 Champlin 458E-3 Spud by Amoco
10/27/82 TD @ 14,418'
11/30/82 Complete @ Zone 3 Producer
Perf 14,210-70' @ 4 spf & 90° phasing
Acidize w/ 6,255g 7.5% in 3 wash stages
Perf 13900-56' @ 4 spf & 90° phasing
Acidize w/ 5,250g 7.5% & 250# BAF
Set CIBP above all perfs
Perf 13042-578(OA) @ 4 spf & 90° phasing
Acidize w/ 22,000g 7.5% & 1500# BAF
5/13/82 Squeeze Zone 3 and Reperf
Sqz w/ total of 500sx in 3 tries under CICR
Drill out all to 14,370'
TCP perf 13872-14326 OA @ 6 spf & 60°
10/11/89 Add Zone 2 Perfs
TCP perf 13022-850 OA @ 6 spf & 60°
12/12/89 Acidize All
Pump 3,000g 15% HCL
4/20/90 Lost spinner tool @ 14,000'
11/93 convert to Injector
7/16/96 Attempted water shut-off
Dump 10,180# 20/40 sand & 60' cmt (tag @ 13,266' by WLM)
Missing Reports of CIBP set @ 12,537'
12/22/00 Pull tbg and clean out
Clean out cmt/sand & CIBP down to cmt @ 13,266'. No tbg in well.
1/10/01 Run new 3-1/2" tbg
Caliper shows good csg/liner above 10,318'
11/13/03 Install 2-3/8" tbg
Set CIBP @ 13,202' w/ 10' cmt. TCP perf 12,854-94' @ 4 spf. Stimulate entire Nugget interval w/ propellant sleeves. Unable to swab down. Suspect cement integrity issues. RDMO to evaluate.
1/6/04 TOH w/ 2-3/8" tbg
1/9/04 Ran Pulsed Neutron Log
1/14/04 Ran Cement Mapping Tool
**All in dications are water influx is via fractures in the formation. Evaluate isolation/recompletion options.

Printed 10/14/2008

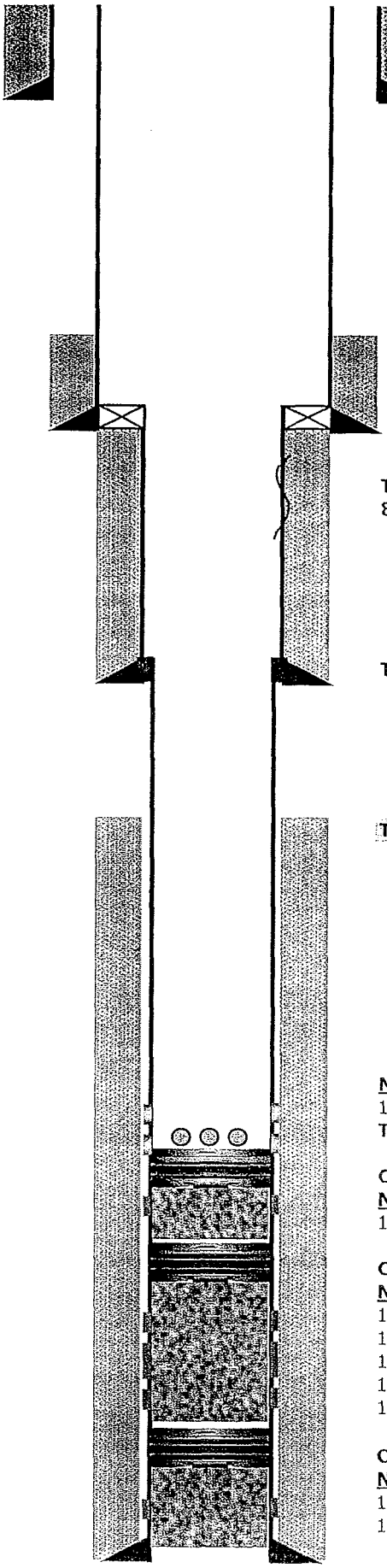

WELL NAME:	ARE W16-06			FIELD:	ANSCHUTZ RANCH EAST
QTR QTR:		SEC:	16	TWN: 4N	RNG: 8E
COUNTY:	SUMMIT	ST:	UT	SPUD DATE:	
KB: 7344	GL: 7314	TD:	13493	PBTD:	
LAST UPDATED:	09/13/05	BY:	MIKE MERCER		

CASING DETAILS

PURPOSE	SIZE	WEIGHT	GRADE	SET DEPTH
SURFACE	13-3/8"	54.5#	K-55	1998'
INTERMEDIATE	9-5/8"	40-47#	S-95	7999'
INTERMEDIATE	7-5/8"	45.3#	P-110	F/7657-12044
PRODUCTION	4-1/2"	13.5#	P-110	F/11007-13957

TUBING DETAILS

DESCRIPTION	SIZE	WEIGHT	GRADE	SET DEPTH
KB				30.00

Tite Spot
8060-8200

TOL @ 11007'

TOC @ 12640'

WELL HISTORY:

Oct-81	Perf 13918, sqz w/ 150 sxs. Perf 13835, sqz w/ 100 sxs
	Perf 13800, sqz w/ 230 sxs
	Perf 13896-908, acidize w/ 1200g 7.5% HCL.
	Set CICR @ 13850, sqz w/ 100 sxs
	Perf 13812-830, acidize w/ 1350g 7.5% HCL
Nov-81	Perf 13794-796. Sqz 13794-796, 13812-830 w/ 200 sxs
	Perf 13770-780, acidize w/ 500g 7.5% HCL
	Perf 13755-780. Sqz 13755-780 w/ 150 sxs
Dec-81	Perf 13792-794. Sqz w/ ??? Sxs
	Perf 13755-770, acidize w/ 1500g 15% HCL
	Set CICR @ 13687, sqz w/ ??? Sxs
Jan-82	DO CICR to 13688. Perf 13664-685, acidize w/ 2200g 7.5% HCL
	Perf 13440-458, 13480-548, 13578-610
	Acidize w/ 9000g 7.5% HCL
08/06/91	Set CICR @ 13563, sqz w/ 380 sxs
08/12/91	Milled tite spot in casing f/ 8060-8200 w/ 6.28" OD tapered mill
08/18/91	Perf 13440-458, 13480-548 thru tubing
04/10/01	TIH w/ 3-3/4" bit, tag fill @ 13449', DO to 13498
04/11/01	Lost 3 cones off of bit
04/13/01	2 magnet runs, no recovery, impression block, circle in center
04/20/01	Tag @ 13498, washover fill to 13508. Rec'd sand.
04/25/01	SD WO. SI well w/ 27' landing joint.

NUGGET PERFS
13440-458, 13480-548
Three cones off bit

CICR @ 13563'
NUGGET PERFS (SQZD)
13578-610, 13664-685

CIBP @ 13688' (PARTIAL
NUGGET PERFS (SQZD)
13755-770, 13770-80
13792-794, 13794-796
13800 (SQZ)
13812-830
13835 (SQZ)

CICR @ 13850'
NUGGET PERFS (SQZD)
13896-908
13918 (SQZ)

OTHER INFORMATION:

PBTD - 13498'. Bottom 50' of perfs are covered up.

MERIT ENERGY COMPANY

WELL NAME:	CHAMPLIN 387 B1A			FIELD:	ANSCHUTZ RANCH EAST		
QTR QTR:		SEC:	9	TWN:	3N	RNG:	7E
COUNTY:	SUMMIT		ST:	UT	SPUD DATE:		10/04/80
KB: 7342	GL: 7327	TD:	8309	PBTD:	7800		
LAST UPDATED:	01/11/05		BY:	MIKE MERCER			

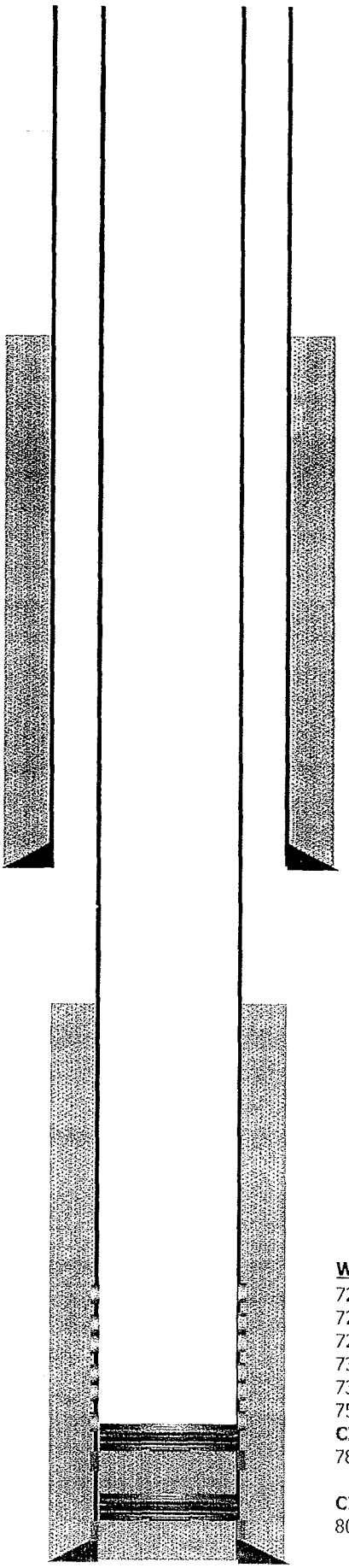

CASING DETAILS

PURPOSE	SIZE	WEIGHT	GRADE	SET DEPTH
SURFACE	9-5/8"	32.3#		1412'
PRODUCTION	7"	23, 26#		8299'

TUBING DETAILS

DESCRIPTION	SIZE	WEIGHT	GRADE	SET DEPTH
KB				15.00

NO TBG DETAILS

WELL HISTORY:

WATTON CANYON PERFS

7200-7220
7224-7230, 7248-7256
7268-7274, 7282-7298
7308-7314, 7332-7350
7390-7404, 7432-7446
7500-7520, 7540-7550
CICR @ 7800
7818-7910

CICR @ 7900
8018-8101

AMOCO PRODUCTION CO
OPERATOR:
Submitted by:

WELLBORE DI[illegible]AM
Field: Anschutz R[illegible]ch
Well: CH 372 C #1
SEC: 23 **TWP:** 4N **RGE:** 7E

KB 16.70'

DEPTH KB

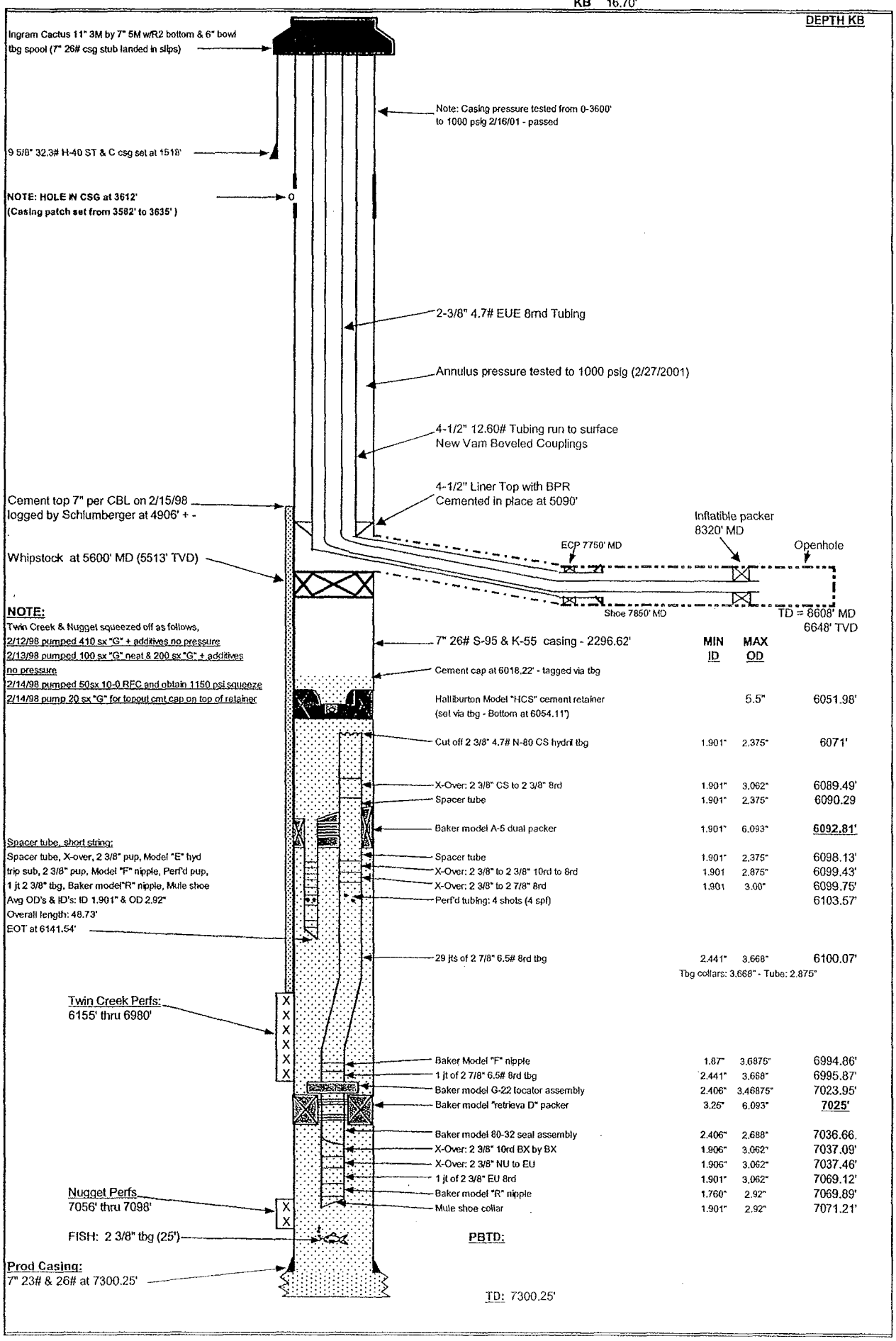

	MIN ID	MAX OD	DEPTH KB
Halliburton Model "HCS" cement retainer (set via tbg - Bottom at 6054.11')		5.5"	6051.98'
Cut off 2 3/8" 4.7# N-80 CS hydril tbg	1.901"	2.375"	6071'
X-Over: 2 3/8" CS to 2 3/8" 8rd	1.901"	3.062"	6089.49'
Spacer tube	1.901"	2.375"	6090.29
Baker model A-5 dual packer	1.901"	6.093"	**6092.81'**
Spacer tube	1.901"	2.375"	6098.13'
X-Over: 2 3/8" to 2 3/8" 10rd to 8rd	1.901	2.875"	6099.43'
X-Over: 2 3/8" to 2 7/8" 8rd	1.901	3.00"	6099.75'
Perf'd tubing: 4 shots (4 spf)			6103.57'
29 jts of 2 7/8" 6.5# 8rd tbg	2.441"	3.668"	6100.07'
Baker Model "F" nipple	1.87"	3.6875"	6994.86'
1 jt of 2 7/8" 6.5# 8rd tbg	2.441"	3.668"	6995.87'
Baker model G-22 locator assembly	2.406"	3.46875"	7023.95'
Baker model "retrieva D" packer	3.25"	6.093"	**7025'**
Baker model 80-32 seal assembly	2.406"	2.688"	7036.66.
X-Over: 2 3/8" 10rd BX by BX	1.906"	3.062"	7037.09'
X-Over: 2 3/8" NU to EU	1.906"	3.062"	7037.46'
1 jt of 2 3/8" EU 8rd	1.901"	3.062"	7069.12'
Baker model "R" nipple	1.760"	2.92"	7069.89'
Mule shoe collar	1.901"	2.92"	7071.21'

ANSCHUTZ RANCH EAST UNIT W31-04

Summit County, Utah
Location: 731' FWL & 87' FNL Sec 31-T4N-R7E
Elevation:7894' GL/ 7926' KB
Last Updated by CAM 12/17/2007

30" Conductor Casing @ 71'
cemented to surface

20" Conductor Casing @ 299'
94#, K-55, ST&C
cemented to surface w/ 775 sxs class "A"

13-3/8" Surface Casing @ 2,672'
541' of 61# K-55; 321' of 54.5# K-55; 1119' of 61# J-55; 39' of 61# S-80; 620' of 61# J-55;
ALL ST&C
Cmt w/ 1700 sxs 50/50 Poz/"A" & 636 sxs class "G" neat.

9-5/8" Intermediate Casing @11,695'
257' of 53.5# S-95; 1112' of 47# S-95; 1314' of 43.5# S-95; 1609' of 40# S-95; 1555' of 43.5# S-95; 2035' of 47# S-95; 848' of 53.5# S-95; 1055' of 53.5# S-95; 856' of 53.5# CYS-95; 1027' of 62.8# S-105
ALL LT&C
Cemented with 2200 sxs of Class G

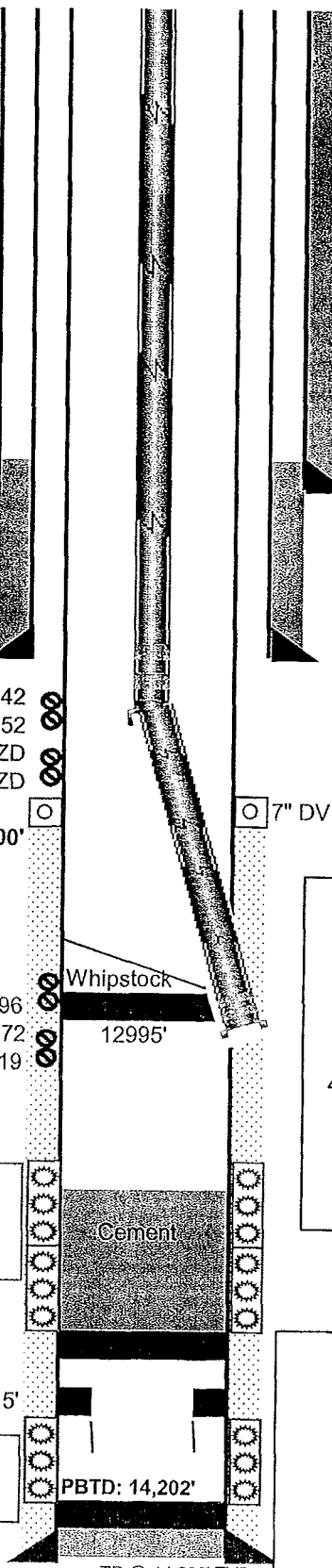

WELL HISTORY & NOTES

11/82 Completed as a Z1/Z2/Z3 Injector
Acidize w/ 8000 gals 7.5% HCL
8/82 Set cmt RET and squeeze
Set @11760'; Pump 75 sxs G cmt;
Perf 13588-590, 13582-584, 13420-22, set retainer @13438, squeeze
DO cmt 12623-13012, pressure test ok
7/93 Run replacement pkr and tubing string
1/96 Replace tubing string with 13% chrome
Good 900 psi casing test
11/99 Drill 2 laterals and cement 4" DP and perf
Notes:
From reports is it suspected that the south lateral has a significant amount of cement. High water rates are the reason the well was shut-in. Highest recorded water rate was 250 bwpd in 2000.

Tubing Detail(North Lateral):
3-1/2" 12.7# VAM N-80 set at 12,860'
X-over: 3-1/2" x 4-1/2"
x-over: 4-1/2" x 4" HT 38
4" HT 38 Drill pipe to 13970' MD (??TVD)
Baker payzone pkr @ 14,000 MD
76' ft of logging tools at 14,478' MD
Cemented to 13130'
4" DP perforated from 13,310'-13460'; 13,820'-13,970'

Tubing Detail(South Lateral):
Kickoff from North lateral @ 13,126'
5-7/8" OH to plug @ 14023'

Nugget Sand Z1/Z2 Perfs
12998-13000(SQZD w/200 sxs), 13055-13096, 13111-128, 13138-187, 13200-232, 13257-261(SQZD w/50 sxs) 13290-13356, 13376-13450

Nugget Sand Z2/Z3 Perfs
13588-13630, 13660-13760, 13790-13850, 13874-13932, 14030-14070, 14100-14140

7" Production Casing @14,303'
816': 26# S-95 8rd
4358': 23# S-95 8rd
4066': 26# S-95 8rd
394': 32# N-80 8rd
1290': 32# S-95 8rd
898': 35# S-95
2459': 32# S-95
cemented with 325 sxs Class G

Printed 10/16/2008

WELL NAME:	ARE W20-06			FIELD:	ANSCHUTZ RANCH EAST
QTR QTR:		SEC:	20	TWN: 4N	RNG: 8E
COUNTY:	SUMMIT	ST:	UT	SPUD DATE:	05/19/81
KB: 7563	GL: 7534	TD:	14163	PBTD:	13823
LAST UPDATED:	11/04/04	BY:	NICK TUNNELL		

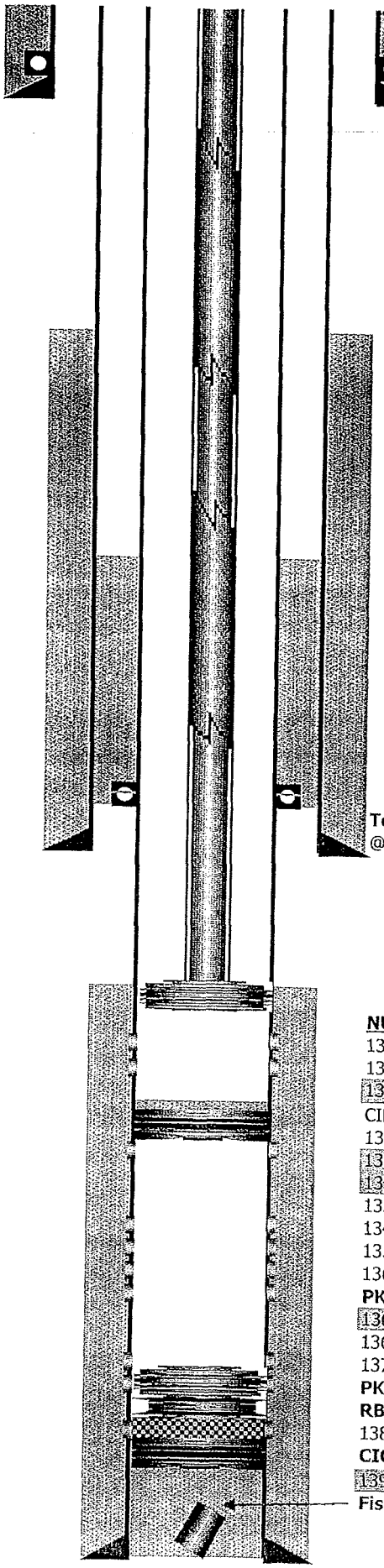

CASING DETAILS

PURPOSE	SIZE	WEIGHT	GRADE	SET DEPTH
SURFACE	13-3/8", 13-1/2"	61-81.4#	N-80, S-80, S-95	5411'
INTERMEDIATE	9-5/8", 9-7/8"	43.5-62.8#	S-95	11330'
PRODUCTION	7", 6-5/8"	26-32#	N-80, P-110	14163'

TUBING DETAILS

DESCRIPTION	SIZE	WEIGHT	GRADE	SET DEPTH
KB				29.00
TBG	2-7/8"	6.5#	N-80	
PKR				12,858'

All depths are estimates based on "Daily Activity Report" dated 06/2/04

NUGGET PERFS:

13008-038, 13046-064
13092-115
13135-215 (sqzd)
CIBP w/ cmt @ 13220'
13230-310
13248-268 (sqzd)
13292-346 (sqzd)
13370-392, 13418-446
13470-490, 13514-533
13556-580, 13606-618
13628-650
PKR @ 13670'
13680-692 (sqzd)
13699-708, 13716-726
13736-746, 13772-800
PKR @ 13791'
RBP @ 13803'
13830-860 (fill)
CICR @ 13886'
13910-930, 13966-990 (sqzd)

WELL HISTORY:

01/01/82	Initial completion - perf'd 13966-990, 13910-930, 13628-650
	13606-618, 13514-533, 13680-692, 13699-708, 13716-726
	13736-746, 13772-800, 13830-860, 13556-580, 13248-268
	13292-346, 13370-392, 13418-446, 13470-490.
	Sqzd 13910-990
09/20/83	Sqzd 13680-692 (for conformance). Perf'd 13610-22, 13632-54
07/29/86	Sqzd 13248-346 (OA)
	Perf'd 13370-92, 13418-46, 13470-90, 13514-33
09/05/86	Perf'd 13135-215, 13092-115, sqzd 13092-215
07/01/92	Replace corroded tbg, Perf'd 13008-38, 13046-64, 13092-115
03/22/96	Perf'd 13230-310...may have squeeze some perfs, no records
03/10/04	Pulled tubing and packer, selectively swab tested

WELL NAME:	ARE W17-16			FIELD:	ANSCHUTZ RANCH EAST
QTR QTR:		SEC:	17	TWN: 4N	RNG: 8E
COUNTY:	SUMMIT	ST:	UT	SPUD DATE:	
KB: 7375	GL: 7350	TD:	14671	PBTD:	14140
LAST UPDATED:	10/16/08	BY:	NICK TUNNELL		

CASING DETAILS

PURPOSE	SIZE	WEIGHT	GRADE	SET DEPTH
SURFACE	13-3/8"			2526'
INTERMEDIATE	9-5/8"			10701'
INTERMEDIATE	7-5/8"			F/10371-11800
PRODUCTION	5"	18#	P-110	F/10237-14671
PRODUCTION	7"			F/0-10237

TUBING DETAILS

DESCRIPTION	SIZE	WEIGHT	GRADE	SET DEPTH

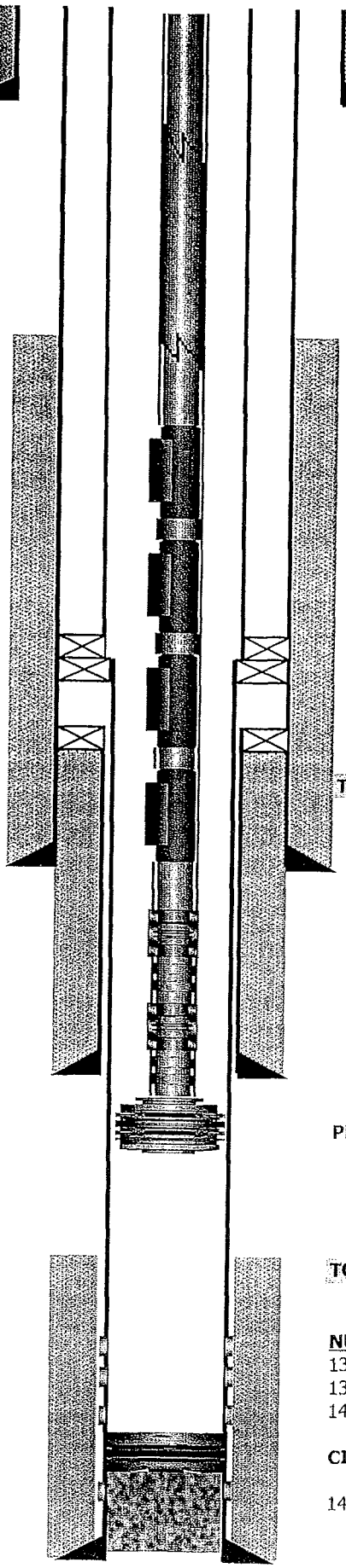

TOC @ 10371'

PKR @ 13747'

TOC @ 13100'

NUGGET PERFS
13806-844, 13864-912
13932-976, 14010-040
14064-094

CICR @ 14140'

14150-180 (SQZD)

WELL HISTORY:

DV TOOL. 7" @ 11856'

WELL NAME:	**ARE W20-02**				FIELD:	**ANSCHUTZ RANCH EAST**	
QTR QTR:		SEC:	**20**	TWN:	**4N**	RNG:	**8E**
COUNTY:	**SUMMIT**		ST:	**UT**	SPUD DATE:		**05/01/83**
KB: **7331**	GL:	**7310**	TD:	**13928**	PBTD:	**12950**	
LAST UPDATED:		**11/09/07**		BY:		**CASEY MORTON**	

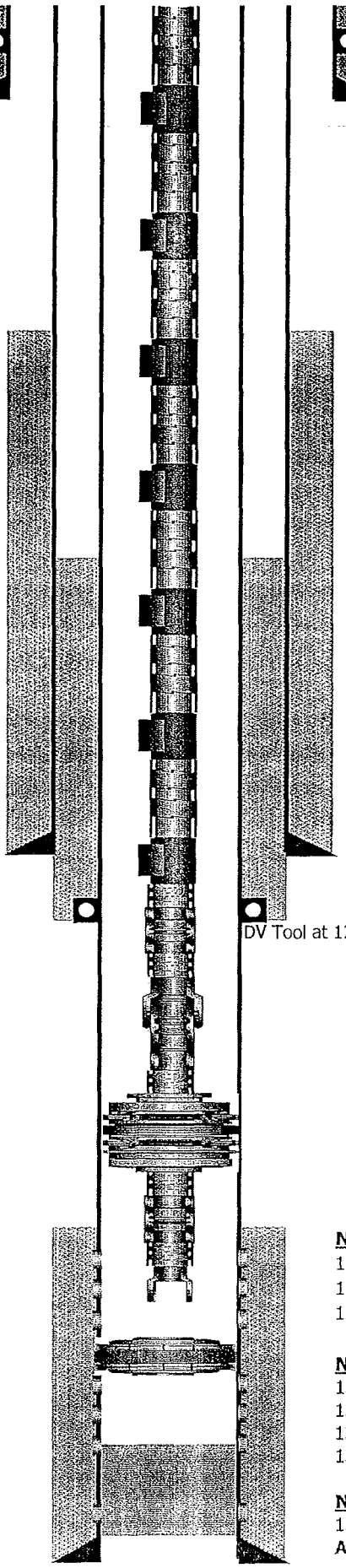

CASING DETAILS

PURPOSE	SIZE	WEIGHT	GRADE	SET DEPTH
SURFACE	13-3/8", 13-5/8"	54.5-88.2#	K-55, HC-95	5140'
INTERMEDIATE	9-5/8", 9-7/8"	47-62.8#	MC-95, S-105	10934'
PRODUCTION	7"	32-35#	N-80, S-95	13928'

Has an additional 20" surface casing string set @ 60', not shown on WBS

TUBING DETAILS

DESCRIPTION	SIZE	WEIGHT	GRADE	SET DEPTH
KB				21.00
82 JTS	2-7/8"	6.5#	N-80	2,650.53
GLV #7	2-7/8"			2,657.57
78 JTS	2-7/8"	6.5#	N-80	5,139.88
GLV #6	2-7/8"			5,146.91
68 JTS	2-7/8"	6.5#	N-80	7,311.03
GLV #5	2-7/8"			7,318.05
58 JTS	2-7/8"	6.5#	N-80	9,167.66
GLV #4	2-7/8"			9,174.68
48 JTS	2-7/8"	6.5#	N-80	10,692.10
GLV #3	2-7/8"			10,699.12
34 JTS	2-7/8"	6.5#	N-80	11,784.19
GLV #2	2-7/8"			11,791.22
24 JTS	2-7/8"	6.5#	N-80	12,558.46
GLV #1	2-7/8"			12,565.48
1 JT	2-7/8"	6.5#	N-80	12,597.76
X NIPPLE	2.313"			12,598.80
1 JT	2-7/8"	6.5#	N-80	12,631.08
ON/OFF TOOL	2-7/8" X 5-1/2"			12,632.90
PUP JT	2-7/8"	6.5#	N-80	12,638.98
ASI-X PKR	2-7/8" X 7"			12,646.52
PUP JT	2-7/8"	6.5#	N-80	12,652.60
XN NIPPLE	2.313" W/ NO G			12,653.73
PUP JT	2-7/8"	6.5#	N-80	12,659.78
WL REENTY	2-7/8"			12,660.46

Based on 03/18/04 Pulling Report

WELL HISTORY:

08/18/83	Perf Z3 f/ 13476-560, acidize w/ 6300g 10% HCL
	Perf Z2 f/ 13004-430 (OA) w/ TCP.
	Acidize all w/ 600 bbls acid
10/17/84	Left 7' of PLT tool in hole
01/08/86	Sqz 13004-108 w/ 150 sxs
	Perf Z1 f/ 12739-924 (OA) w/ TCP (no stimulation)
02/15/86	PLT indicates flow f/ 5 of 11 zones
07/29/86	Test lower Z2 & Z3
09/09/86	Convert to injection, perf Z2 f/ 13005-065, 13080-110
03/01/95	Convert to production
05/18/98	Attempt WSO, spot 27 bbl cmt f/ 12950-13628 (tagged @ 12951)
02/01/04	Set CIBP at 12990? RIH with gas lift

NUGGET Z1 PERFS
12739-768, 12778-784
12792-811, 12831-864
12890-899, 12912-924

NUGGET Z2 PERFS
13005-065, 13080-110 (w/ 1/4 spf, 0 phasing)
13127-152, 13164-220
13232-256, 13280-308
13320-360, 13372-430

NUGGET Z3 PERFS
13475-560
All perfs shot w/ 4 spf 90 phasing unless noted otherwise

DV TOOL. 13-3/8" @ ????, 7" @ 12190'

PROPOSED WELLBORE

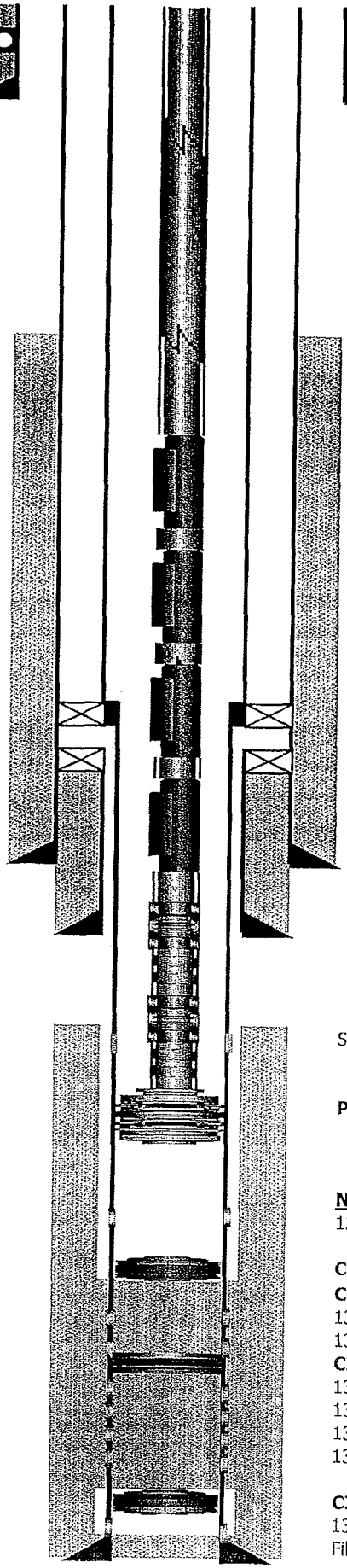

WELL NAME:	ARE W20-12			FIELD:	ANSCHUTZ RANCH EAST
QTR QTR:		SEC:	20	TWN: 4N	RNG: 8E
COUNTY:	SUMMIT	ST:	UT	SPUD DATE:	
KB:	GL:	TD:	14084	PBTD:	13142
LAST UPDATED:	10/16/08	BY:	NICK TUNNELL		

CASING DETAILS

PURPOSE	SIZE	WEIGHT	GRADE	SET DEPTH
SURFACE	13-3/8"			5362'
INTERMEDIATE	9-5/8"			11245'
LINER	7"			F/10571-11967
LINER	4-1/2"	15#	P-110, FL4S	F/10109-13994
TIEBACK	7"			

Has an additional 20" surface casing string set @ 277', not shown on WBS

TUBING DETAILS

DESCRIPTION	SIZE	WEIGHT	GRADE	SET DEPTH
KB				0.00

WELL HISTORY:

03/03/97	Perf'd 12948-968, 13008-024, 13040-060, 13174-194
08/01/03	Set CICR @ 13295, Sqzd Nugget w/ 150 sxs
08/11/03	Perf'd Nugget 13060-13117
08/12/03	Perf'd Nugget 12928-13060
08/13/03	Set CIBP @ 13142
08/18/03	Acidized Nugget f/12928-13117 w/ 3000g 15% HCL (foamed)

Sqz Perfs @ 11976-977

PKR @ 12863'

NUGGET PERFS
12928-13117

CIBP @ 13142'
CMT @ 13152' (08/08/03)
13174-194, 13202-242
13250-262, 13274-284
CICR @ 13295' (sqz w/ 150 sxs)
13302-336
13342-415, 13420-454
13472-498, 13526-536
13570-612, 13620-665

CIBP @ 13673' (w/ 29' cmt on top)
13680-745, 13780-864
Fill @ 13875 (06/24/99)

DV TOOL. 13-3/8" @ 2652"

WELL NAME:	ARE W31-06				FIELD:	ANSCHUTZ RANCH EAST	
QTR QTR:		SEC:	31	TWN:	4N	RNG:	8E
COUNTY:	SUMMIT		ST:	UT	SPUD DATE:		
KB: 7770	GL: 7743	TD:	14330	PBTD:	13367		
LAST UPDATED:	08/14/08		BY:	CASEY MORTON			

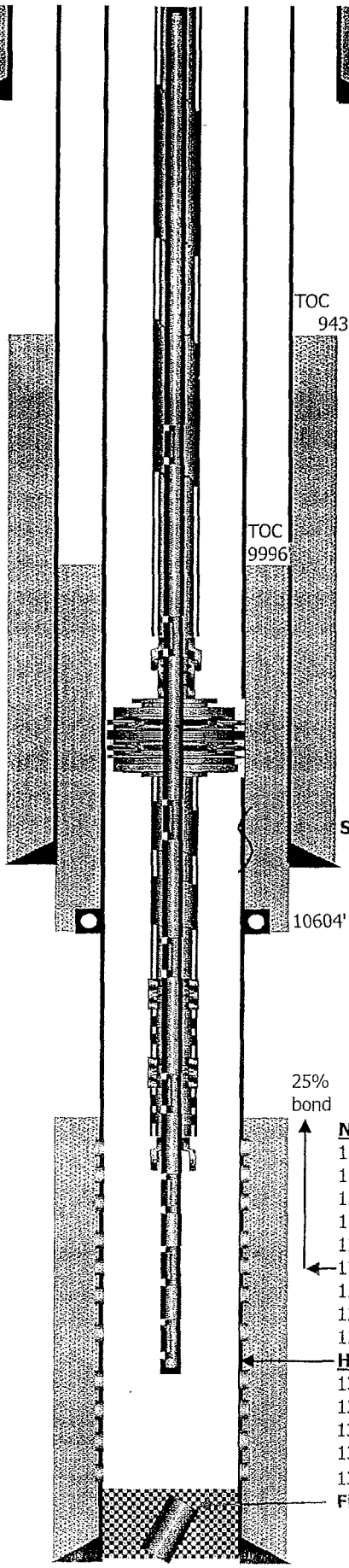

CASING DETAILS

PURPOSE	SIZE	WEIGHT	GRADE	SET DEPTH
SURFACE	13-3/8"	54.5-61#	K-55	2301'
INTERMEDIATE	9-5/8", 9-7/8"	47-62.8#	N-80, S-105	10689'
PRODUCTION	7"	32-38#	N-80, P-110	14033'

Has an additional 20" surface casing string set @ 107', not shown on WBS

TUBING DETAILS

DESCRIPTION	SIZE	WEIGHT	GRADE	SET DEPTH
KB				27.00
326 JTS	2-7/8"	6.5#	N-80	10,269.42
PUP	2-7/8"	6.5#	N-80	10,275.50
ON/OFF				10,277.02
ARROWSET PKR				10,284.73
56 JTS	2-7/8"	6.5#	N-80	12,048.52
X NIPPLE				12,049.72
1 JT	2-7/8"	6.5#	N-80	12,081.06
XN NIPPLE				12,082.34
1 JT	2-7/8"	6.5#	N-80	12,114.74
WL REENTRY				12,115.16

Based on tubing details 12/10/04

COILED TUBING DETAILS		LENGTH	SET DEPTH
1-1/4" CT		8992.0	8,992.00
GLV #8	SJ 40 1" GLV w/ 3/16" PORT	8.0	9,000.00
1-1/4" CT		942.0	9,942.00
GLV #7	SJ 40 1" GLV w/ 3/16" PORT	8.0	9,950.00
1-1/4" CT		792.0	10,742.00
GLV #6	SJ 40 1" GLV w/ 3/16" PORT	8.0	10,750.00
1-1/4" CT		592.0	11,342.00
GLV #5	SJ 40 1" GLV w/ 3/16" PORT	8.0	11,350.00
1-1/4" CT		542.0	11,892.00
GLV #4	SJ 40 1" GLV w/ 3/16" PORT	8.0	11,900.00
1-1/4" CT		392.0	12,292.00
GLV #3	SJ 40 1" GLV w/ 3/16" PORT	8.0	12,300.00
1-1/4" CT		392.0	12,692.00
GLV #2	SJ 40 1" GLV w/ 3/16" PORT	8.0	12,700.00
1-1/4" CT		392.0	13,092.00
GLV #1	1" GLV w/ 3/16" S/O	8.0	13,100.00

Based on coiled tubing details 04/14/05

NUGGET PERFS
12171-188, 12194-228
12238-254, 12256-262
12270-308, 12310-364
12410-454, 12462-470
12472-548, 12551-618
12638-745, 12746-776
12820-850, 12860-892
12902-940, 12952-974
12992-13058

HINGELINE
13130-212, 13230-282
13330-450
13460-462 (sqzd)
13471-490, 13508-574
13596-668, 13704-816, 13834-974

Fish @ 14165': Open Hole logging tool (39.1' long, 3-3/8" OD)

WELL HISTORY:

09/01/83	Complete Z2 & Z3
06/01/85	Perf & Acidize Z1
03/01/86	Add Z1, Z2 & OT pay
02/01/89	Add Z3 & OT pay
04/01/89	Close SS - OT only
04/01/90	Open SS - NS/OT
04/01/92	Replace corroded tubing
04/01/95	Replace corroded tubing w/ Chrome
10/01/96	Frac Z1 & Z2
03/28/01	Pulled pkr, ran 2-7/8" tubing (no packer)
07/01/01	Gas lifted ("Poor Boy")
05/01/03	Chemical hot oil for paraffin, net increase 1 mmcfd
08/01/04	Shut off lift gas (circulating)
09/11/04	WL TD - tagged fill @ 13367' (sand in bailer)
12/01/04	CO Fill to new PBTD 14060'

NOTE: TITE SPOT NOTED IN 7" CASING @ 10416' (CALIPER MAR-01)

DV TOOL. 7" @ 10604'

MERIT ENERGY COMPANY

Wellbore Diagram

Lease & Well No.	ARE W36-16 (FKA: Island Ranch E-1)
Field Name	Anschutz Ranch East
Location	Sec. 36, 4N 7E

CPF Name	Gas Gathering
County & State	Summit County, UT
API No.	

Well Information

Ground Elevation:	8,070'	Spud Date:	2/01/82
KB Elevation:	8,108'	Completion Date:	11/01/83
Plugback Depth:	??	Current Prod:	
Total Depth:	14,475'		

Current Prod:	
Oil -	0 bopd
Gas -	185 mcfpd
Water -	175 bwpd
FTP -	?
FCP -	?
SITP -	?
SICP -	?
SIBHP -	?

Comments: Schlumberger coiled tubing gas lift setup
No Merit Reports in PA

Pipe Data

Top	Bottom	Size	Weight	Grade	Sx. Cmt	Comments
Conductor						
0'	0'	0	Unk	Unk	Unk	
Surface						
0'	2,888'	13-3/8"	54.5&61#	K-55		
Intermediate 1						
0'	6,833'	9-5/8"	47.0#	HC-95	Unk	DV@ 5662
Intermediate 2 and Production Liner						
0'	11,817'	7"	32-35#	S-95	Unk	32#-6230', 29#-10489'
10,476'	14,775'	4-1/2"	15.1#	P-110	Unk	4" ID PBR @ 10748'

Description	Length	Bottom	Size	Min. ID	Weight	Grade
Tubing Details						
KB	38.00'	38.00'				
318 jts	9,854.00'	9,892.00'	3-1/2"		10.3#	VAM; N-80
24 jts	743.72'	10,635.72'	3-1/2"		9.2#	Chrome
R-Nipple	1.00'	10,636.72'	3-1/2"	2.562		
1 jt	31.00'	10,667.72'	3-1/2"		9.2#	Chrome
On/Off tool	1.00'	10,668.72'	5-1/2 x 3-1/2"			
Pup joint	6.00'	10,674.72'	3-1/2"			VAM
Baker FHL packer	6.00'	10,680.72'				
1 jt	31.00'	10,711.72'	3-1/2"			VAM
R Nipple	1.00'	10,712.72'	3-1/2"	2.562		
1 jt	31.00'	10,743.72'	3-1/2"			VAM
PBR	4.00'	10,747.72'		4"		
Seal Assmebly		10,747.72'				
COILED TUBING DETAIL						
1-1/4" Coiled tubing	6,766.00'	6,766.00'				
Valve 8		6,767.00'				
Valve 7		8,766.00'				
Valve 6		10,166.00'				
Valve 5		11,016.00'				
Valve 4		11,616.00'				
Valve 3		12,216.00'				
Valve 2		12,716.00'				
Valve 1		13,117.00'				

Perforations

Pay: Gross 204 PHIA
Net 196 PHIN
Notes:

Date	Top	Bottom	Gross	Holes	Comments
9/11/1985	13,400'	13,410'	10'	40	Sand Frac(48K lbs.)
9/11/1985	13,420'	13,482'	62'	248	Sand Frac(48K lbs.)
9/11/1985	13,510'	13,516'	6'	24	Sand Frac(48K lbs.)
9/11/1985	13,542'	13,562'	20'	80	Sand Frac(48K lbs.)
9/11/1985	13,582'	13,613'	31'	124	Sand Frac(48K lbs.)
9/11/1985	13,676'	13,690'	14'	56	Sand Frac(48K lbs.)
9/11/1985	13,701'	13,710'	9'	36	Sand Frac(48K lbs.)
	13,750'	13,768'	18'	72	
1/8/1984	13,776'	13,832'	56'	224	All 4 SPF
1/8/1984	13,861'	13,894'	33'	132	All 4 SPF
1/8/1984	13,924'	13,950'	26'	104	All 4 SPF
1/8/1984	13,980'	14,015'	35'	140	All 4 SPF
1/8/1984	14,030'	14,054'	24'	96	All 4 SPF
1/8/1984	14,061'	14,072'	11'	44	All 4 SPF
	14,088'	14,158'	70'	280	All 4 SPF
9/28/1987	14,270'	14,340'	70'	280	All 4 SPF
9/28/1987	14,370'	14,520'	150'	600	All 4 SPF
9/28/1987	14,580'	14,600'	20'	80	All 4 SPF
Totals	13,400'	14,600'	1,200'	2,620'	

Current Completion

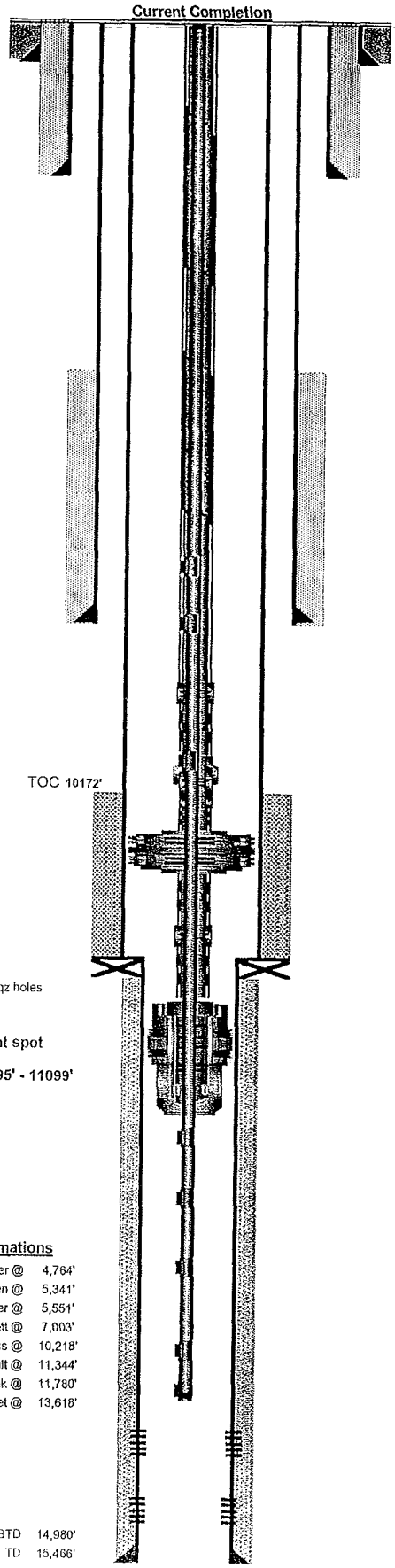

Formations

Frontier @	4,764'
Aspen @	5,341'
Bear River @	5,551'
Gannett @	7,003'
Preuss @	10,218'
Salt @	11,344'
Twin Creek @	11,780'
Nugget @	13,618'

PBTD	14,980'
TD	15,466'

MERIT ENERGY COMPANY

WELL NAME:	ARE E28-06			FIELD:	ANSCHUTZ RANCH EAST
QTR QTR:		SEC:	28	TWN: 4N	RNG: 8E
COUNTY:	SUMMIT	ST:	UT	SPUD DATE:	
KB: 7513	GL: 7487	TD: 15170	PBTD:		
LAST UPDATED:	09/13/05	BY:	MIKE MERCER		

CASING DETAILS

PURPOSE	SIZE	WEIGHT	GRADE	SET DEPTH
SURFACE	13-3/8"	72#	S95	3988'
INTERMEDIATE	9-5/8", 9-7/8"	47#, 62.8#	S95	12990'
PRODUCTION	7"	32#	L80	F/12313-15160
TIEBACK	7"	32#	N80, S95	F/0-12313'

TUBING DETAILS

DESCRIPTION	SIZE	WEIGHT	GRADE	SET DEPTH
KB				26.00
	TUBING PULLED 07/13/05			

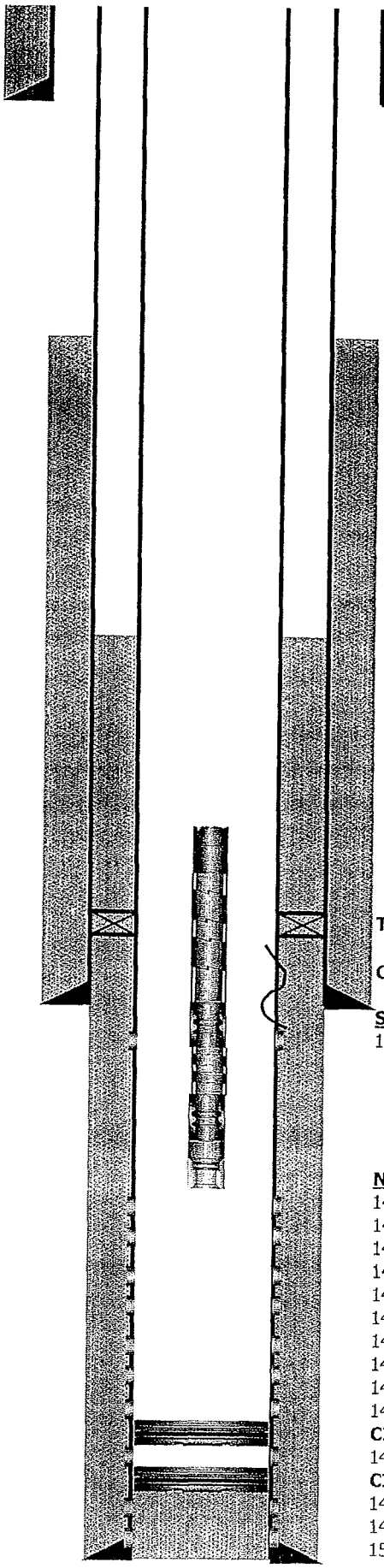

TOL @ 12313

COLLAPSED CASING @ +/-12678'

SQZ PERFS
12991-12993

NUGGET PERFS
14250-14265
14310-14316
14325-14332
14360-14372
14380-14396
14466-14482
14500-14506
14530-14566
14594-14630
14728-14755
CICR @ 14802'
14814-14866
CICR @ 14900'
14980-14988 (SQZD)
14992-15009 (SQZD)
15018-15024 (SQZD)

FISH: 2-7/8" 6.5# N80 stub, 43 jts 2-7/8" 6.5# N80, X Nipple, 1 jt 2-7/8" 6.5# N80, XN Nipple, WL Re-entry guide (1410.50')

GARY R. HERBERT
Governor

GREGORY S. BELL
Lieutenant Governor

State of Utah
DEPARTMENT OF NATURAL RESOURCES
MICHAEL R. STYLER
Executive Director

Division of Oil, Gas and Mining
JOHN R. BAZA
Division Director

June 6, 2011

43 043 30159
ARE W20-06
4N 8E 20

Ms. Michal K. White
Merit Energy Company
13727 Noel Road, Suite 500
Dallas, TX 75240

Subject: **Notice of Violation:** Abandoned Well Requirements for Fee or State Leases

Dear Ms. White:

The Division of Oil, Gas and Mining (the Division) is reissuing this Notice of Violation (NOV) that originally went out via certified mail to Merit Energy Company (Merit) on July 1, 2010 (see Attachment of original Violation). Merit was given until September 30, 2010, to respond to this NOV. To date the Division has not received any information from Merit showing any attempt to move these wells out of violation status.

As of January 1, 2011, Merit had twenty five (25) wells that were in non-compliance with the requirements for shut-in or temporarily abandoned (SI/TA) status. The Division recognizes that two (2) wells have been plugged and abandoned (PA'd) in March of this year. However the two wells that were PA'd were not part of this NOV. Currently Merit has twenty three (23) wells that are still in non-compliance. Nine (9) of the 23 wells have previously been addressed in this NOV (see Attachment), originally dated June 30, 2010. Six (6) wells have recently been issued an NOV and the remaining eight (8) have also recently being issued a second notice of non-compliance.

Wells with five (5) years non-activity or non-productivity shall be plugged, unless the Division grants approval for extended shut-in time upon a showing of good cause by the operator (R649-3-36-1.3.3).

IMMEDIATE ACTION REQUIRED: Please submit information required by R649-3-36, plug and abandon or place wells on production.

Date of service mailing: June 7, 2011
CERTIFIED MAIL No.: 7005 1820 0001 5562 9832

If you have any questions concerning this matter, please contact me at (801) 538-5281.

Sincerely,

Dustin K. Doucet
Petroleum Engineer

DKD/JP/js
Enclosure
cc: Well Files
Compliance File

N:\O&G Reviewed Docs\ChronFile\PetroleumEngineer\NOV

UTAH DEPARTMENT OF NATURAL RESOURCES

Division of Oil, Gas & Mining

Oil and Gas Program

1594 West North Temple, Suite 1210, Box 145801

Salt Lake City, Utah 84114-5801

(801) 538-5340 Phone

(801) 359-3940 Fax

NOTICE OF VIOLATION

STATE OF UTAH

OIL AND GAS CONSERVATION ACT

****

To the following operator:

Name: MERIT ENERGY COMPANY

Well(s) or Site(s):		API #:
1.)	ARE W31-04E	43-043-30165
2.)	CHAMPLIN 372 AMOCO C1	43-043-30143
3.)	ARE W31-12	43-043-30190
4.)	ARE W16-14	43-043-30096
5.)	ARE 16-12	43-043-30231
6.)	CHAMPLIN 387 B1A	43-043-30168
7.)	ARE W17-16	43-043-30176
8.)	ARE W16-06	43-043-30138
→ 9.)	ARE W20-06	43-043-30159
10.)	ARE W20-02	43-043-30228

Date and Time of Inspection/Violation: June 30, 2010

Mailing Address: Attn: Michal K. White
13727 Noel Road, Ste 500
Dallas, TX 75240

Under the authority of the Utah Oil and Gas Conservation Act, Section 40-6 et. Seq., Utah Code Annotated, 1953, as amended, the undersigned authorized representative of the Division of Oil, Gas and Mining (Division) has conducted an inspection of the above described site and/or records on the above date and has found alleged violation(s) of the act, rules or permit conditions as described below.

Description of Violation(s):

Rule R649-3-36, *Shut-in and Temporarily Abandoned Wells* – With the exception of wells 9 and 10 listed above, the above referenced wells have been Shut-in or Temporarily Abandoned (SI/TA) over 5 consecutive years. Wells 9 and 10 are approaching 5 years consecutive shut-in and only produced intermittently from 2004 to 2006 after previously being shut-in in 2000 and 1998 respectively. According to Rule R649-3-36, the operator is required to supply the Division with reasons for extended SI/TA, the length of time for extended SI/TA and proof of well bore integrity for every well SI/TA over 12 consecutive months. After 5 years of continued SI/TA, the wells are to be plugged unless good cause is supplied to the Division for extended SI/TA in addition to the required information just mentioned.

UTAH DEPARTMENT OF NATURAL RESOURCES

Division of Oil, Gas & Mining

Oil and Gas Program

1594 West North Temple, Suite 1210, Box 145801

Salt Lake City, Utah 84114-5801

(801) 538-5340 Phone

(801) 359-3940 Fax

The Division has initiated several contacts with Merit Energy Company (Merit) requesting required documents and action per R649-3-36. All wells listed above had a first notice sent out via certified mail on January 22, 2004 to Merit. Previously in 2003, BP America Production Company (Merits' predecessor) had SI/TA requests denied on all wells listed above except well 1 and well 9. The Division accepted a plan on April 8, 2005 for wells 1 through 8 to bring those wells back into production. After several correspondence and accepted plans to bring wells into production, the Division issued a Third Notice on August 26, 2008. The Division notified Merit on January 21, 2009 that the plan and submitted integrity information was insufficient. By letter dated August 26, 2009, Merit proposed to get proper MIT data and reactivate several of the wells. Our records show nothing has been done to date to move these wells out of violation status. The Division has had numerous other communications by phone and email with Merit and Merit has not provided adequate data to prove mechanical integrity and has not followed through with plans for removing wells from the SI/TA list. Merit has not complied with rule R649-3-36 despite the several years the Division has worked with Merit to bring these wells into compliance. In addition to the wells subject to this NOV, Merit has 15 additional wells SI/TA beyond 12 months without approval. Immediate action must be taken on those wells as well.

Action: For the well subject to this notice, Merit shall either submit the information required by R649-3-36, plug and abandon or place the wells on production.

This notice shall remain in effect until it is modified, terminated, or vacated by a written notice of an authorized representative of the director of the Division of Oil, Gas and Mining. Failure to comply with this notice will result in the Division pursuing further actions against said operator. Further actions may include initiation of agency actions to order full cost bonding and plugging and abandonment of wells and requests for bond forfeiture and civil penalties.

Compliance Deadline: September 30, 2010

Date of Service Mailing: July 1, 2010

CERTIFIED MAIL NO: 7004 1160 0003 0190 4543

Division's Representative

Operator or Representative

(If presented in person)

6/2005

MERIT ENERGY COMPANY

13727 Noel Road · Suite 500 · Dallas, Texas 75240
Ph 972.701.8377 · Fx 972.960.1252 www.meritenergy.com

October 30, 2012

RECEIVED
NOV 01 2012
DIV OF OIL, GAS & MINING

Mr. Clinton Dworshak
Utah Department of Natural Resources
Division of Oil, Gas & Mining
1594 W. North Temple, Suite 1210
Salt Lake City, UT 84114

RE: 2013 Plugging and/or Reactivation Well Plan
Merit Energy Company

Dear Mr. Dworshak,

This letter is written to follow up our April 26, 2012 meeting in your office regarding shut in and temporarily abandoned wells operated by Merit Energy Company. As discussed in that meeting, Merit will be plugging the wells listed below by the end of the 2012 calendar year.

ARE W 31-04	API 4304330165	Sec 31-T4N-R8E
ARE W 31-12	API 4304330190	Sec 31-T4N-R8E
ARE W 16-12	API 4304330231	Sec 16-T4N-R8E
ARE W 17-16	API 4304330176	Sec 17-T4N-R8E

43 043 30159
ARE W20-06
4N 8E 20

Merit is also in the process of applying for approval to convert the Champlin 372 C 1 well to a salt water disposal. Merit has identified the wells on the enclosed list as candidates for plugging or reactivation by the end of the 2013 calendar year. Please be aware as Merit continues its review of the wells on the Extended Shut in and Temporarily Abandoned Well List we may identify potential in other wells which we may want to substitute for wells on the enclosed list.

Merit truly appreciated the opportunity to meet you and your staff in April. If you have any questions regarding the enclosed list or Merit's operations, please contact me at (972) 628-1558 or Kreg Hadley at (972) 628-1617.

Sincerely,

MERIT ENERGY COMPANY

Arlene Valliquette

Arlene Valliquette
North Division Regulatory Manager

Enclosure

Cc: Dustin Doucet – Utah DOGM
Randy Sanders – Evanston, Wyoming
Neil Nadrash – Dallas, Texas
Kreg Hadley – Dallas, Texas

PROBABLE REACTIVATIONS; POSSIBLE P&A'S

Well Name: ARE W 20-09
API: 43-043-30286
Summit County, Utah
Perfs: 11,742' – 13,821'

The 20-09 was completed in the Nugget in 1988 and has cummed 590 MBO, 30.1 BCF, and 587 MBW. This well is currently SI with a conventional gas lift with a "go" system. Due to the structural position of this well (very high), Merit hopes to reactivate this well.

Well Name: ARE W 20-06
API: 43-043-30159
Summit County, Utah
Perfs: 13,008' – 13,860'

The 20-06 was completed in the Nugget in 1982 and has cummed 4.1 MBO, 81.8 BCF, and 152 MBW. This well is currently SI w/ 2-7/8" tbg in the hole w/ pkr at 12,898'. This well is in a good structural position within the field and based on the relatively low volumes of water this well has produced comparably, Merit hopes to reactivate this well.

Well Name: ARE W 20-08
API: 43-043-30123
Summit County, Utah
Perfs: 11,900' – 12,647' (OA)

The 20-08 was completed in the Nugget in 1981 and has cummed 534 MBO, 31.5 BCF, and 1.2 MMBW. This well is currently SI with a 2-7/8" poor boy gas lift system. The 20-08 has a conventional gas lift system with a hole punched in the tbg @ 10,250'. Due to the high structural positioning of this well, it is likely that this well will be further evaluated for water shut-off and reactivation.

Well Name: ARE W 20-12
API: 43-043-30220
Summit County, Utah
Perfs: 12,928' – 13,117'

The 20-12 was completed in the Nugget in 1983 and has cummed 5.6 MMBO, 127 BCF, and 742 MBW. This well is currently SI with a 2-3/8" conventional gas lift system. This well is in a good structural position in the field and exhibits SI pressures that would indicate remaining production potential given proper evaluation into water shut-off for reactivation.

PROBABLE P&A'S

Well Name: ARE W 16-14
API: 43-043-30096
Summit County, Utah
Perfs: 12,816' – 13,515'

The 16-14 was spud in March 1979 and brought online as a Nugget producer. The 16-14 IP'd @ 195 bopd, 940 mcfpd, and 5 bwpd. The ARE W 16-14 cummed 15 MBO, 5 BCF, and 50 MBW. Several zones were perf'd, acidized, produced, and then abandoned due to high water volumes. In addition, the 16-14 was converted numerous times from a producer to an injector and vice versa. There are not any active wells in section 16. The ARE W 16-14 would not prove to be the most beneficial reactivation candidate. With all of the combined pieces of information, Merit will proceed with the P&A of this well.

Well Name: ARE E 21-14
API: 43-043-30130
Summit County, Utah
Perfs: 10,880' – 11,650'

The 21-14 was originally completed in the Nugget in 1981 and has cummed 56 MBO, 722.5 BCF, and 258 BW. This well was plugged back and recompleted in the Twin Creek formation in 1991 due to poor production. Due to the extremely inferior positioning on the structure for this well, coupled with the fact that the Twin Creek does not appear to hold any future potential in this area either, Merit will likely proceed with the P&A of this well.

GARY R. HERBERT
Governor

SPENCER J. COX
Lieutenant Governor

State of Utah

DEPARTMENT OF NATURAL RESOURCES

MICHAEL R. STYLER
Executive Director

Division of Oil, Gas and Mining
JOHN R. BAZA
Division Director

May 27, 2014

Certified Mail #7003 2260 0003 2358 6960

43 043 30159
20 4N 8E

Arlene Valliquette
North Division Regulatory Manager
Merit Energy Company
13727 Noel Road, Suite 500
Dallas, Texas 75240

Subject: Oil and Gas General Conservation Rule R649-3-36 - Shut-in and Temporarily Abandoned Wells

Dear Ms. Valliqeutte:

The Division of Oil, Gas and Mining (Division) met with Merit Energy Company (Merit), at our offices, on April 26, 2012 to discuss long term plans for Merits' shut-in wells at Anschutz Ranch Field. The Division expressed its concerns regarding the number of shut-in wells Merit operated and the length of time wells have been shut-in. The Division discussed the importance to timely plugging shut-in wells that have no future value and submit extension sundries for shut-in wells that will not be immediately plugged or returned to production. Merit representatives at the meeting indicated they understood the Divisions' concerns. However, Merit required additional time for their engineer, newly assigned to this area, to review the shut-in well list to determine which wells should be returned to production and which wells should be plugged. Merit also needed to present the well review to management for budget approval.

Merit submitted, to the Division, a written 2013 Plugging and/or Reactivation Well Plan dated October 30, 2012. The plan stated Merit was in the process of applying for approval to convert the Champlin 372 Amoco C 1 well to a water disposal well. The plan committed to the plugging of the ARE W31-04E, ARE W31-12, ARE W16-12 and ARE W17-16 wells by the end of the 2012 calendar year. Merit also proposed probable reactivations of the ARE W20-09, ARE W20-06, ARE W20-08 and ARE W20-12 wells and probable plugging and abandonment of the ARE W16-14 and ARE E 21-14 wells. The results are listed below.

Champlin 372 Amoco C 1	Water Disposal Well application never submitted
ARE W31-04E	Plugged 1/9/2013
ARE W31-12	Plugged 1/21/2013
ARE W16-12	Plugged 12/3/2012
ARE W17-16	Plugged 11/16/2012
ARE W20-09	Reactivated April 2013
ARE W20-06	Never Reactivated
ARE W20-08	Never Reactivated
ARE W20-12	Never Reactivated
ARE W16-14	Plugged May 2014
ARE E21-14	Plugged April 2014

Ryan Huddleston from your office has indicated in recent conversations with Dustin Doucet that Merit is preparing to reactivate/plug 6-8 more shut-in wells. To date Merit has not submitted a written plan for Division approval.

Merit currently operates twenty-five (25) shut-in wells at Anschutz Ranch Field; see Compliance Attachment. Eleven (11) of the twenty-five total shut-in wells were added between January 2012 and January 2014. The Division has sent Merit several Shut-in and Temporary Abandonment Notices describing Rule 649-3-36 Shut-in and Temporarily Abandoned Well requirements. The Division denied shut-in extension requests for seven (7) wells due to insufficient information. The Division also issued Notices of Violation for ten (10) of the shut-in wells. Merit has not submitted shut-in extensions sundries for the eleven wells added between January 2012 and January 2014, or submitted additional required information for the seven denied shut-in extensions, or resolved the Notices of Violation.

The operator is responsible to file, yearly, for extended shut-in or temporary abandonment for wells shut-in or temporarily abandoned for a period of twelve (12) consecutive months. Merit must file a Sundry Notice providing the following information for each of the twenty-five wells listed on the Compliance Attachment; reasons for shut-in or temporarily abandonment of the well, length of time the well is expected to be shut-in or temporarily abandoned and an explanation and supporting data showing the well has integrity (R649-3-36.1). After review the Division will either approve the continued shut-in or temporarily abandoned status or require remedial action (R649-3-36.2). After five (5) years of non-activity or non-productivity, the well shall be plugged in accordance with R649-3-24, unless approval for extended shut-in time is given by the Division upon a showing of good cause by the operator (R649-3-36.3). Please note, thirteen (13) of the twenty-five wells listed on the Compliance Attachment have been shut-in over five (5) years.

Merit has until **June 30, 2014** to submit sundries, for the subject wells, in accordance with **Oil and Gas Conservation General Rule 649-3-36 Shut-in and Temporarily Abandoned Wells**.

Should Merit not meet shut-in and temporarily abandoned well requirements, the Division is prepared to file a Notice of Agency Action (NAA) for Commencement of Informal Adjudicative Proceedings (R649-10-3) for this matter in accordance with Oil and Gas Conservation General Rule R649-10 Administrative Procedures.

If you have any questions or need further assistance, please feel free to contact me at clintondworshak@utah.gov or 801-538-5280 or Dustin Doucet, Petroleum Engineer, at dustindoucet@utah.gov or 801-538-5281.

Sincerely,

Clinton Dworshak
Oil and Gas Compliance Manager

CLD/js
Enclosure: Compliance History

cc: John Rogers, O&G Associate Director
Dustin Doucet, Petroleum Engineer
Compliance File
Well Files

Compliance History
Merit Energy Company - Anschutz Ranch Field

Champlin 327 Amoco	Last Prod 10/01	2004 SI Notice	**Ext SI 1/1/05**			Ext SI 1/1/06	2008 SI Notice	2009 SI Notice	**2010 NOV**		**2011 NOV**	**2011 Denied SI/TA sundry**	**2013 PLAN - SWDW**
ARE W16-06	Last Prod 11/96	2004 SI Notice	**Ext SI 1/1/05**	Prod 2/05-5/05		Ext SI 1/1/06	2008 SI Notice	**2009 Denied SI/TA Sundry**	**2010 NOV**		**2011 NOV**		
ARE W20-06	Last Prod 5/00	2004 SI Notice	**Ext SI 1/1/05**	Prod 3/2004-6/05			2008 SI Notice	**2009 Denied SI/TA Sundry**	**2010 NOV**		**2011 NOV**		**2013 Plan - Reactivate**
ARE W20-02	Last Prod 6/98	2004 SI Notice	**Ext SI 1/1/05**	Prod 1/2004-6/06			2008 SI Notice	**2009 Denied SI/TA Sundry**	**2010 NOV**		**2011 NOV**		
ARE W20-12	Last Prod 3/02			Prod 9/03-3/06	Prod 6/08-7/08		2008 SI Notice	**2009 Denied SI/TA Sundry**			**2011 NOV**		**2013 Plan - Reactivate**
ARE W30-02	Last Prod 12/01	2004 SI Notice	**Ext SI 1/1/05**	Prod 7/05-8/07		Ext SI 1/1/06		2009 SI Notice	2010 SI Notice			**2012 Denied SI/TA Sundry**	
ARE W30-06	Last Prod 6/98	2004 SI Notice	**Ext SI 1/1/05**	Prod 5/0-10/07				2009 SI Notice					
ARE 29-04ST1	Last Prod 3/06			Prod 9/07-10-07					2010 SI Notice			**2011 Denied SI/TA sundry**	
ARE W36-08	Last Prod 4/02	2004 SI Notice		Prod 5/04-4/06	Prod 8/07-10/07				2010 SI Notice	2011 SI Notice			
ARE W12-04	Last Prod 1/04			Prod 11/04-12/10							**2011 NOV**		
ARE W20-08	Last Prod 7/08									2011 SI Notice	**2011 NOV**		**2013 Plan - Reactivate**
ARE W30-10	Last Prod 6/08								2010 SI Notice	2011 SI Notice	**2011 NOV**		
ARE W21-04	Last Prod 5/97	2004 SI Notice	**Ext SI 1/1/05**	Prod 6/04-7/08					2010 SI Notice	2011 SI Notice	**2011 NOV**		
ARE W20-03	Last Prod 7/96	2004 SI Notice	**Ext SI 1/1/05**	Prod 12/06-7/08		**Ext SI 1/1/06**			2010 SI Notice	2011 SI Notice	**2011 NOV**		
ARE W20-04	Last Prod 7/97	2004 SI Notice	**Ext SI 1/1/05**	Prod 1/07-5/10		**Ext SI 1/1/06**							
ARE W36-14	Last Prod 11/00	2004 SI Notice	**Ext SI 1/1/05**	Prod 3/05-9/10		**Ext SI 1/1/06**							
ARE W11-1	Last Prod 4/96	2004 SI Notice	**Ext SI 1/1/05**	Prod 10/06-10/10		**Ext SI 1/1/06**							
ARE W30-13	Last Prod 4/98	2004 SI Notice	**Ext SI 1/1/05**	Prod 7/05-8/10	Prod 5/12-8/12	**Ext SI 1/1/06**							
ARE W19-16	Last Prod 3/08	2004 SI Notice	**Ext SI 1/1/05**	Prod 10/05-1/07	Prod 12/08-5/11	**Ext SI 1/1/06**							
ARE W36-10	Last Prod 6/02	2004 SI Notice	**Ext SI 1/1/05**	Prod 5/04-5/10									
ARE W36-16	Last Prod 4/07			Prod 12/08-7/10			2008 SI Notice						
ARE W30-14	Last Prod 1/03			Prod 5/05-8/12									
ARE W30-15	Last Prod 1/06			Prod 1/08-8/08	Prod 3/09-4/09								
ARE W20-10	Last Prod 10/08			Prod 9/09-5/10									
ARE W19-08	Last Prod 4/10												

STATE OF UTAH
DEPARTMENT OF NATURAL RESOURCES
DIVISION OF OIL, GAS, AND MINING

FORM 9

5.LEASE DESIGNATION AND SERIAL NUMBER: FEE

SUNDRY NOTICES AND REPORTS ON WELLS

Do not use this form for proposals to drill new wells, significantly deepen existing wells below current bottom-hole depth, reenter plugged wells, or to drill horizontal laterals. Use APPLICATION FOR PERMIT TO DRILL form for such proposals.

6. IF INDIAN, ALLOTTEE OR TRIBE NAME:

7.UNIT or CA AGREEMENT NAME: ANSCHUTZ RANCH EAST

1. TYPE OF WELL Gas Well

8. WELL NAME and NUMBER: ARE W20-06

2. NAME OF OPERATOR: MERIT ENERGY COMPANY

9. API NUMBER: 43043301590000

3. ADDRESS OF OPERATOR: 13727 Noel Rd Ste 500 , Dallas, TX, 75240

PHONE NUMBER: 972 628-1540 Ext

9. FIELD and POOL or WILDCAT: ANSCHUTZ RANCH EAST

4. LOCATION OF WELL
FOOTAGES AT SURFACE: 1291 FNL 0936 FWL
QTR/QTR, SECTION, TOWNSHIP, RANGE, MERIDIAN: Qtr/Qtr: NWNW Section: 20 Township: 04.0N Range: 08.0E Meridian: S

COUNTY: SUMMIT

STATE: UTAH

11.

CHECK APPROPRIATE BOXES TO INDICATE NATURE OF NOTICE, REPORT, OR OTHER DATA

TYPE OF SUBMISSION	TYPE OF ACTION		
✓ NOTICE OF INTENT Approximate date work will start: 9/17/2015	☐ ACIDIZE	☐ ALTER CASING	☐ CASING REPAIR
	☐ CHANGE TO PREVIOUS PLANS	☐ CHANGE TUBING	☐ CHANGE WELL NAME
	☐ CHANGE WELL STATUS	☐ COMMINGLE PRODUCING FORMATIONS	☐ CONVERT WELL TYPE
☐ SUBSEQUENT REPORT Date of Work Completion:	☐ DEEPEN	☐ FRACTURE TREAT	☐ NEW CONSTRUCTION
	☐ OPERATOR CHANGE	✓ PLUG AND ABANDON	☐ PLUG BACK
	☐ PRODUCTION START OR RESUME	☐ RECLAMATION OF WELL SITE	☐ RECOMPLETE DIFFERENT FORMATION
☐ SPUD REPORT Date of Spud:	☐ REPERFORATE CURRENT FORMATION	☐ SIDETRACK TO REPAIR WELL	☐ TEMPORARY ABANDON
	☐ TUBING REPAIR	☐ VENT OR FLARE	☐ WATER DISPOSAL
☐ DRILLING REPORT Report Date:	☐ WATER SHUTOFF	☐ SI TA STATUS EXTENSION	☐ APD EXTENSION
	☐ WILDCAT WELL DETERMINATION	☐ OTHER	OTHER:

12. DESCRIBE PROPOSED OR COMPLETED OPERATIONS. Clearly show all pertinent details including dates, depths, volumes, etc.

Merit Energy Company request approved to Plug and Abandon the above referenced well according to the attached procedure and WBD.

Approved by the Utah Division of Oil, Gas and Mining

Date: September 17, 2015

By: Dark K Quist

Please Review Attached Conditions of Approval

NAME (PLEASE PRINT)	PHONE NUMBER	TITLE
Katherine McClurkan	972 628-1660	Regulatory Analyst
SIGNATURE N/A		**DATE** 9/14/2015

RECEIVED: Sep. 14, 2015

The Utah Division of Oil, Gas, and Mining

- State of Utah
- Department of Natural Resources

Electronic Permitting System - Sundry Notices

Sundry Conditions of Approval Well Number 43043301590000

1. Notify the Division at least 24 hours prior to conducting abandonment operations. Please call Dan Jarvis at 801-538-5338.

2. Amend Plug #3: This plug shall be and inside/outside plug. RIH and perforate 7" and 9 5/8" @ 7958'. Establish injection into perfs. RIH with CICR and set at 7908'. Sting into CICR and establish circulation down the 7" casing back up the 7" x 9 5/8" annulus. Close 9 5/8" casing valve and attempt to establish injection into 9 5/8" perfs. If injection into the 9 5/8" perfs cannot be established: M&P 66 sx cement, sting into CICR pump 36 sx, sting out and dump 30 sx on top of CICR. If injection is established: M&P 150 sx cement, sting into CICR, open 13 3//8" casing valve, pump 94 sx, close 13 3/8" casing valve and open the 9 5/8" casing valve and pump 26 sx into perfs, sting out and dump 30 sx on top of CICR.

3. Amend Plug #5: This plug shall be and inside/outside plug. RIH and perforate 7" and 9 5/8" @ 2811'. Establish injection into perfs. RIH with CICR and set at 2761'. Sting into CICR and establish circulation down the 7" casing back up the 7" x 9 5/8" annulus. Close 9 5/8" casing valve and attempt to establish injection into 9 5/8" perfs. If injection into the 9 5/8" perfs cannot be established: M&P 33 sx cement, sting into CICR pump 23sx, sting out and dump 10 sx on top of CICR. If injection is established: M&P 63 sx cement, sting into CICR, open 13 3//8" casing valve, pump 40 sx, close 13 3/8" casing valve and open the 9 5/8" casing valve and pump 13 sx into perfs, sting out and dump 10 sx on top of CICR.

4. Note Plug #6: All annuli shall be cemented from a minimum depth of 100' to the surface. Perf 7" and 9 5/8" @ 100' and circulate cement to surface (±63sx) if 1" not feasible .

5. All balanced plugs shall be tagged to ensure that they are at the depth specified.

6. Surface reclamation shall be done in accordance with R649-3-34 - Well Site Restoration.

7. All requirements in the Oil and Gas Conservation General Rule R649-3-24 shall apply.

8. If there are any changes to the procedure or the wellbore configuration, notify Dustin Doucet at 801-538-5281 (of c) or 801-733-0983 (home) prior to continuing with the procedure.

RECEIVED: Sep. 17, 2015

Wellbore Diagram

API Well No: 43-043-30159-00-00 **Permit No:** **Well Name/No:** ARE W20-06

Company Name: MERIT ENERGY COMPANY

Location: Sec: 20 T: 4N R: 8E Spot: NWNW

Coordinates: X: 493999 Y: 4546641

Field Name: ANSCHUTZ RANCH EAST

County Name: SUMMIT

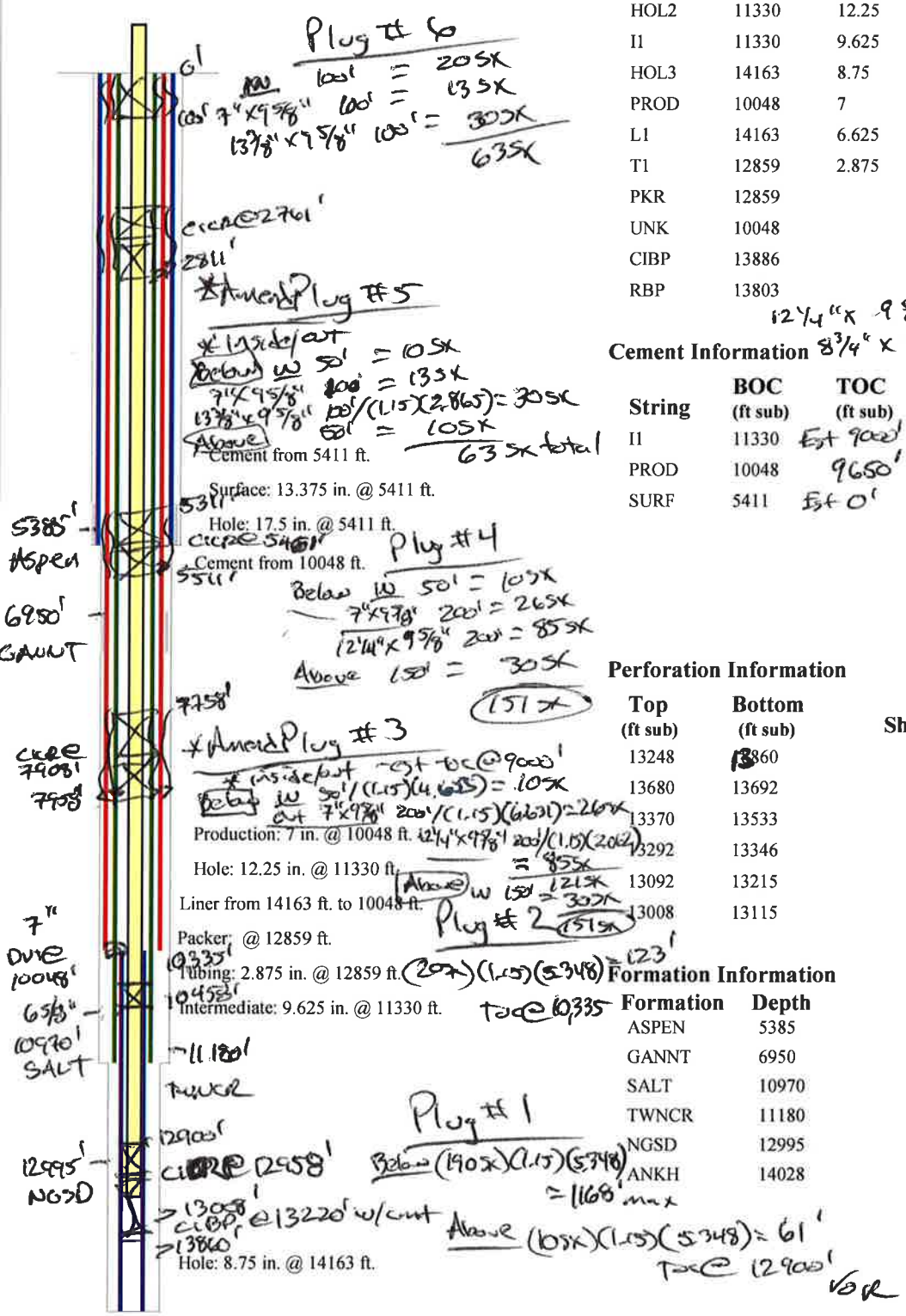

String Information

String	Bottom (ft sub)	Diameter (inches)	Weight (lb/ft)	Length (ft)	Capacity (f/cf)
HOL1	5411	17.5			
SURF	5411	13.375	61		
HOL2	11330	12.25			
I1	11330	9.625	43.5		2.392
HOL3	14163	8.75			
PROD	10048	7	26		4.655
L1	14163	6.625	27		5.348
T1	12859	2.875	6.5		
PKR	12859				
UNK	10048				
CIBP	13886				
RBP	13803				

12 1/4" x 9 5/8" (108) → 2.062
8 3/4" x 7" (108) → 4.201

Cement Information

String	BOC (ft sub)	TOC (ft sub)	Class	Sacks
I1	11330	Est 9000'	UK	950
PROD	10048	9650'	UK	450
SURF	5411	Est 0'	UK	1510

Perforation Information

Top (ft sub)	Bottom (ft sub)	Shts/Ft	No Shts	Dt Squeeze
13248	13860			
13680	13692			
13370	13533			
13292	13346			
13092	13215			
13008	13115			

Formation Information

Formation	Depth
ASPEN	5385
GANNT	6950
SALT	10970
TWNCR	11180
NGSD	12995
ANKH	14028

ARE W20-06
API# 43-043-30159
NW-NW Sec 20 T04N-R08E
Anschutz Ranch East Field
Summit County, Utah

PLUG & ABANDONED PROCEDURE

1. Conduct pre-job safety meeting and complete daily JSA
2. Prior to MIRU, check rig anchors and blow down well if necessary
3. Dig out around WH and check surface annulus for pressure
4. MIRU P&A equipment, ND WH, NU BOP
5. Release packer, TOH and LD tubing
6. PU 6-5/8" 32# CICR, PU 12,958' of 2-3/8" 4.7# workstring, TIH to 12,958' and set
7. Pressure test tubing, establish IR into CICR, pressure test casing to 500 psi
8. Pump 200sxs of 15.8# class G neat 1.15 cu/ft yield cement, 190 sxs under and 10 sxs on top (138 sxs is 902' inside 6-5/8" casing + 52 sxs excess, 10 sxs is 65' on CICR, TOC: 12,892')
9. TOH, LD to 12,000'
10. Roll hole with 432 bbl water with corrosion inhibitor
11. TOH, LD to 10,458'
12. Pump 20sxs of 15.8# class G neat 1.15 cu/ft yield cement balance plug (20 sxs is 130' inside 6-5/8" casing, TOC: 10,327')
13. TOH, LD to 7,958'
14. Pump 20 sxs of 15.8# class G neat 1.15 cu/ft yield cement balance plug (20 sxs is 107' inside 7" 26# casing, TOC 7,648')
15. TOH, stand back 5,511' to derrick
16. RU wireline, TIH to 5,511' and perf with high penetration charges through 7" and 9-5/8" casings, TOH, RD wireline
17. Establish circulation in 7"X9-5/8" annulus and 9-5/8"X13-3/8" annulus
18. Pump 130 sxs of 15.8# class G neat 1.15 cu/ft yield cement, displacing 60 sxs into 9-5/8"X13-3/8" annulus, 30 sxs into 7" X 9-5/8" annulus and leaving 40 sxs inside 7" casing (60 sxs is 219' in 9-5/8"X13-3/8" annulus, 30 sxs is 239' inside 7"X9-5/8" annulus, 40 sxs is 214' inside 7" casing, TOC: 5,296')
19. TOH, WOC
20. TIH and tag to verify TOC at 5,311' or shallower
21. TOH, LD to 2,811'
22. Pump 40 sxs of 15.8# class G neat 1.15 cu/ft yield cement balance plug
23. TOH, LD to 100'
24. Pump 20 sxs cement to surface. TOH, LD Tubing
25. RDMO, ND BOP, NU Wellhead
26. Dig up wellhead and cut off 3' below restored ground level
27. TIH with 1" to 100' inside 9-5/8"X13-3/8" annulus, pump 28sxs of 5.8# class G neat 1.15 cu/ft yield cement to surface, TOH
28. TIH with 1" to 100' inside 7"X9-5/8" annulus, pump 13 sxs of 15.8# class G neat 1.15 cu/ft yield cement to surface, TOH
29. Weld on cap with ID plate, backfill, clean location

RECEIVED: Sep. 14, 2015

Current WBD

WELL NAME:	**ARE W20-06**			FIELD:	**ANSCHUTZ RANCH EAST**		
QTR QTR:		SEC:	**20**	TWN:	**4N**	RNG:	**8E**
COUNTY:	**SUMMIT**	ST:	**UT**	SPUD DATE:	**05/19/81**		
KB:	**7563**	GL:	**7534**	TD:	**14163**	PBTD:	**13823**
API:	43-043-30159						

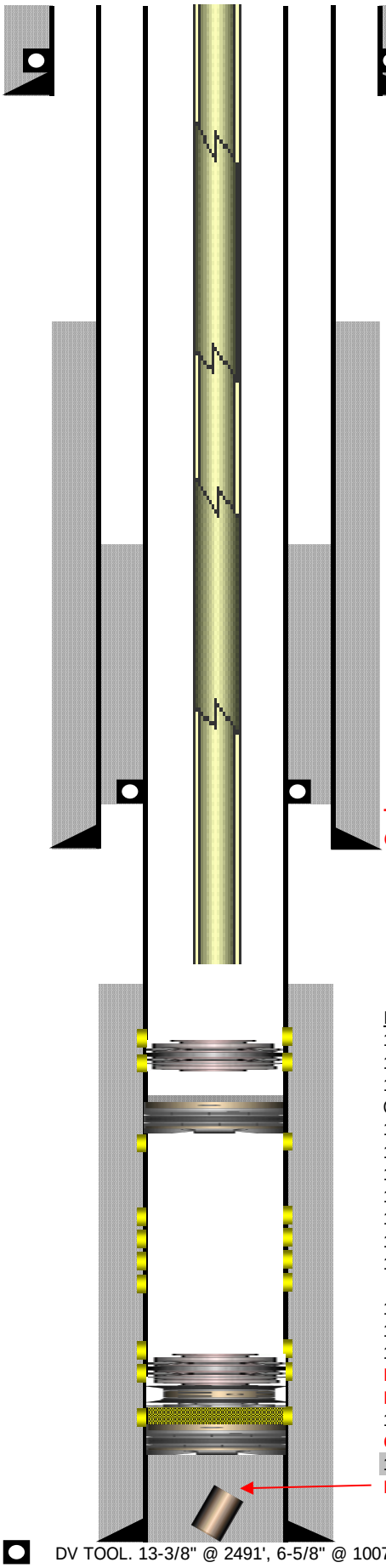

CASING DETAILS

PURPOSE	SIZE	WEIGHT	GRADE	SET DEPTH
SURFACE	13-3/8", 13-1/2"	61-81.4#	N-80, S-80, S-95	5411'
INTERMEDIATE	9-5/8", 9-7/8"	43.5-62.8#	S-95	11330'
PRODUCTION	7", 6-5/8"	26-32#	N-80, P-110	14163'

TUBING DETAILS

DESCRIPTION	SIZE	WEIGHT	GRADE	SET DEPTH
KB				29.00
TBG	2-7/8"	6.5#	N-80	
PKR				12,859'

All depths are estimates based on "Daily Activity Report" dated 06/2/04

20-06 WELL HISTORY:	
01/01/82	Initial completion - perf'd 13966-990, 13910-930, 13628-650
	13606-618, 13514-533, 13680-692, 13699-708, 13716-726
	13736-746, 13772-800, 13830-860, 13556-580, 13248-268
	13292-346, 13370-392, 13418-446, 13470-490.
	Sqzd 13910-990
09/20/83	Sqzd 13680-692 (for conformance). Perf'd 13610-22, 13632-54
07/29/86	Sqzd 13248-346 (OA)
	Perf'd 13370-92, 13418-46, 13470-90, 13514-33
09/05/86	Perf'd 13135-215, 13092-115, sqzd 13092-215
07/01/92	Replace corroded tbg, Perf'd 13008-38, 13046-64, 13092-115
03/22/96	Perf'd 13230-310...may have squeeze some perfs, no records
03/10/04	Pulled tubing/packer swab tested. Packer stuck push to bottom set BP at 13,220' perf's below isolated or squeezed
06/01/04	Test casing to 500psi

NUGGET PERFS:

13008-038, 13046-064
13092-115
13135-215 (sqzd)
CIBP w/ cmt @ 13220'
13230-310
13248-268 (sqzd)
13292-346 (sqzd)
13370-392, 13418-446
13470-490, 13514-533
13556-580, 13606-618
13628-650

13680-692 (sqzd)
13699-708, 13716-726
13736-746, 13772-800
PKR @ 13791'
RBP @ 13803'
13830-860 (fill)
CICR @ 13886'
13910-930, 13966-990 (sqzd)

Proposed WBD

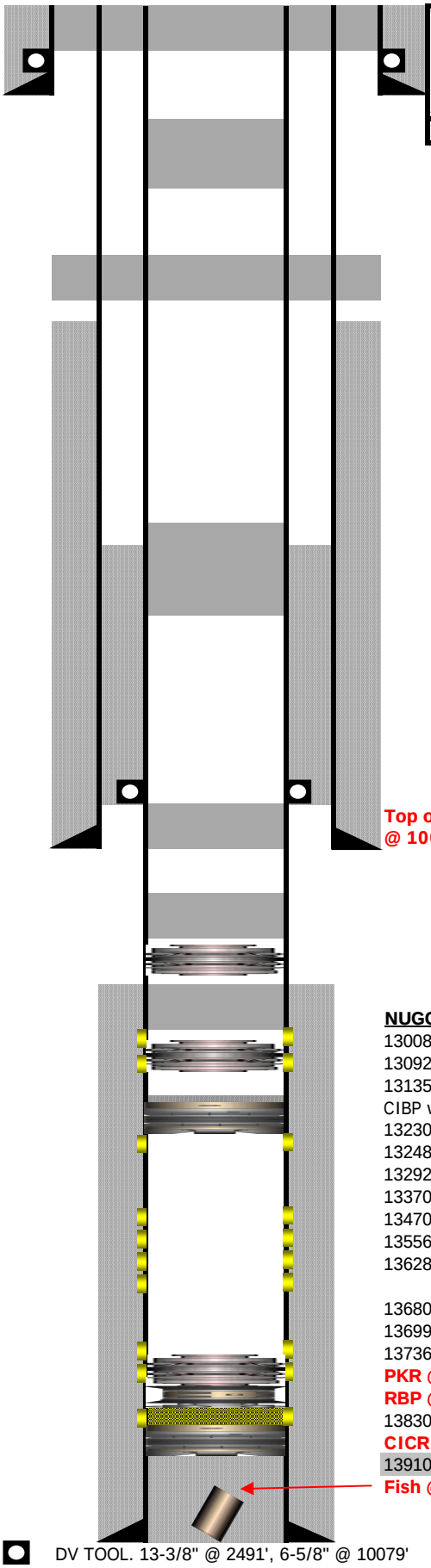

WELL NAME:	**ARE W20-06**			FIELD:	**ANSCHUTZ RANCH EAST**
QTR QTR:		SEC:	**20**	TWN: **4N**	RNG: **8E**
COUNTY:	**SUMMIT**	ST:	**UT**	SPUD DATE:	**05/19/81**
KB: **7563**	GL: **7534**	TD:	**14163**	PBTD:	**13823**
API: 43-043-30159					

CASING DETAILS

PURPOSE	SIZE	WEIGHT	GRADE	SET DEPTH
SURFACE	13-3/8", 13-1/2"	61-81.4#	N-80, S-80, S-95	5411'
INTERMEDIATE	9-5/8", 9-7/8"	43.5-62.8#	S-95	11330'
PRODUCTION	7", 6-5/8"	26-32#	N-80, P-110	14163'

TUBING DETAILS

DESCRIPTION	SIZE	WEIGHT	GRADE	SET DEPTH
KB				29.00
TBG	2-7/8"	6.5#	N-80	
PKR				12,859'

All depths are estimates based on "Daily Activity Report" dated 06/2/04

Top of 6-5/8" @ 10079'

20-06 WELL HISTORY:

01/01/82	Initial completion - perf'd 13966-990, 13910-930, 13628-650
	13606-618, 13514-533, 13680-692, 13699-708, 13716-726
	13736-746, 13772-800, 13830-860, 13556-580, 13248-268
	13292-346, 13370-392, 13418-446, 13470-490.
	Sqzd 13910-990
09/20/83	Sqzd 13680-692 (for conformance). Perf'd 13610-22, 13632-54
07/29/86	Sqzd 13248-346 (OA)
	Perf'd 13370-92, 13418-46, 13470-90, 13514-33
09/05/86	Perf'd 13135-215, 13092-115, sqzd 13092-215
07/01/92	Replace corroded tbg, Perf'd 13008-38, 13046-64, 13092-115
03/22/96	Perf'd 13230-310...may have squeeze some perfs, no records
03/10/04	Pulled tubing/packer swab tested. Packer stuck push to bottom set BP at 13,220' perf's below isolated or squeezed
06/01/04	Test casing to 500psi

NUGGET PERFS:

13008-038, 13046-064
13092-115
13135-215 (sqzd)
CIBP w/ cmt @ 13220'
13230-310
13248-268 (sqzd)
13292-346 (sqzd)
13370-392, 13418-446
13470-490, 13514-533
13556-580, 13606-618
13628-650

13680-692 (sqzd)
13699-708, 13716-726
13736-746, 13772-800
PKR @ 13791'
RBP @ 13803'
13830-860 (fill)
CICR @ 13886'
13910-930, 13966-990 (sqzd)
Fish @ 13995': Junk Basket

DV TOOL. 13-3/8" @ 2491', 6-5/8" @ 10079'

RECEIVED: Sep. 14, 2015