FILE NOTATIONS

in NID File	.....	Checked by Chief	.....
Map Pinned	.....	Approval Letter	.....
Indexed	.....	Disapproval Letter	.....

COMPLETION DATA:

Well Completed	11/7/76	Location Inspected	.....
	WW..... TA.....	Bond released	
OW.✓..	OS..... PA.....	State or Fee Land	.....

LOGS FILED

Driller's Log.....✓

Electric Logs (No.) .✓.....

E..... I..... Dual I Lat..... GR-N..... Micro.....

BHC Sonic GR..... Lat..... Mi-L..... Sonic.....

CBLog..... CCLog..... Others.....

When requesting reports only, use this address:
American Quasar Pet. Co.
707 United Bank Center
Denver, Colorado
80202

Form DOGC-1a

SUBMIT IN TRIPLICATE*
(Other instructions on reverse side)

STATE OF UTAH
DEPARTMENT OF NATURAL RESOURCES
DIVISION OF OIL & GAS

APPLICATION FOR PERMIT TO DRILL, DEEPEN, OR PLUG BACK

5. Lease Designation and Serial No. FEE

6. If Indian, Allottee or Tribe Name

7. Unit Agreement Name

8. Farm or Lease Name: Bingham

9. Well No.: 10-1

10. Field and Pool, or Wildcat: Pineveiw Fld.

11. Sec., T., R., M., or Blk. and Survey or Area: 10-2N-7E

12. County or Parrish: Summit 13. State: Utah

1a. Type of Work: DRILL [X] DEEPEN [ ] PLUG BACK [ ]

b. Type of Well: Oil Well [X] Gas Well [ ] Other Single Zone [ ] Multiple Zone [X]

2. Name of Operator: America Quasar Petr. Co. of New Mexico

3. Address of Operator: 330 Pacfic Western Life Bldg. Casper, Wyoming 82601

4. Location of Well (Report location clearly and in accordance with any State requirements.)
At surface: 682' F.N.L.-3279' F.W.L.
At proposed prod. zone

RECEIVED MAY 20 1976 DIVISION OF OIL, GAS & MINING

14. Distance in miles and direction from nearest town or post office*: Approx. 15 mi. east of Coalville, Utah

15. Distance from proposed* location to nearest property or lease line, ft. (Also to nearest drlg. line, if any): 682'

16. No. of acres in lease: 1279.12

17. No. of acres assigned to this well: 160

18. Distance from proposed location* to nearest well, drilling, completed, or applied for, on this lease, ft.: None on LSE.

19. Proposed depth: 10500'

20. Rotary or cable tools: Rotary

21. Elevations (Show whether DF, RT, GR, etc.): 6761'

22. Approx. date work will start*: 6-15-76

23. PROPOSED CASING AND CEMENTING PROGRAM

Size of Hole	Size of Casing	Weight per Foot	Setting Depth	Quantity of Cement
17 1/2 "	13 3/8 "	48#	60'	60 sx
12 1/4 "	9 5/8 "	36#	2000'	800 sx
8 3/4 "	7 "	23-26-29 #	10,500'	400 sx

America Quasar Petroleum Co. proposes to drill a 10,500' well on the above-described location to test the Nugget formation. Drilling & cementing will be performed as shown above. Testing of potential zones will be at the discretion of the wellsite supervisor. Electric logs will be run to total depth. Mud weight will be sufficient for pressures encountered.

The BOP's will be opened & closed each 24-hr. period to insure proper function during the drilling of this well. Pressure tests with chart recording will be performed each 30 days.

OK - #160-1

IN ABOVE SPACE DESCRIBE PROPOSED PROGRAM: If proposal is to deepen or plug back, give data on present productive zone and proposed new productive zone. If proposal is to drill or deepen directionally, give pertinent data on subsurface locations and measured and true vertical depths. Give blowout preventer program, if any.

24.

Signed: John F. Sindeler Title: Div. Drlg. Supt. Date: 5-17-76

(This space for Federal or State office use)

Permit No. 43-043-30025 Approval Date

Approved by Title Date

Conditions of approval, if any:

*See Instructions On Reverse Side

DATE ..... Pineview Federal 10-1

DATE .....

RECEIVED
MAY 4 1976
DIVISION OF OIL, GAS, & MINING

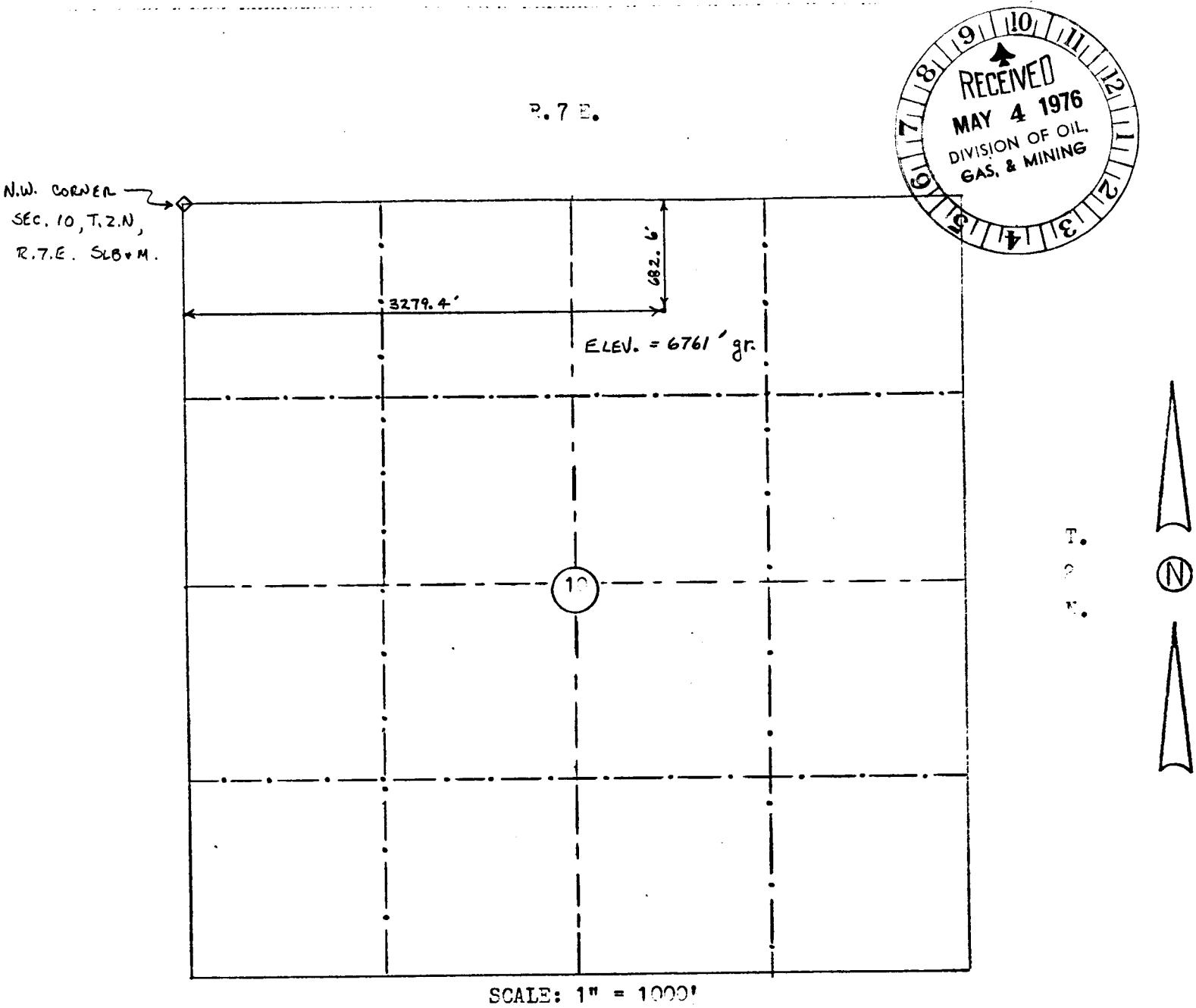

SCALE: 1" = 1000'

SUMMIT ENGINEERING INC. surveyed the following location for American Quasar Petroleum Co. for the purpose of locating an oil well:

The center of the Northwest quarter of the Northeast quarter of Section 10, T.2.N., R.7.E., SLB&M, A point 682.6 feet South and 3279.4 feet East of the Northwest corner of Section 10, T.2.N.,R.7.E., SLB&M, Summit County, Utah.

DATE APR. 30, 1976

E. J. SILVER

DIVISION OF OIL, GAS, AND MINING

FILE NOTATIONS

Date: May 26 -

Operator: American Quasar Pet.

Well No: Brigham 10-10

Location: Sec. 10 T. 2N R. 7E County: Summit

File Prepared [✓] Entered on N.I.D. [✓]

Card Indexed [✓] Completion Sheet [✓]

Checked By:

Administrative Assistant: JW

Remarks: will be changing their previously submitted 10-1 well to 10-R.

Petroleum Engineer/Mined Land Coordinator: [illegible]

Remarks:

Director: 7

Remarks:

Include Within Approval Letter:

Bond Required [ ] *Survey Plat Required [ ]

Order No. 160-1 [✓] Blowout Prevention Equipment [ ]

Rule C-3(c) Topographical exception/company owns or controls acreage within a 660' radius of proposed site [ ]

O.K. Rule C-3 [ ] O.K. In _____ Unit [ ]

Other: [ ]

[✓] Letter Written

May 26, 1976

American Quasar Petroleum Company
330 Pacific Western Life Building
Casper, Wyoming 82601

Re: Well No. Bingham 10-1
Sec. 10, T. 2 N, R. 7 E,
Summit County, Utah

Gentlemen:

Insofar as this office is concerned, approval to drill the above referred to well is hereby granted in accordance with the Order issued in Cause No. 160-1/160-4. Said approval, however, will be conditional upon changing the well name of your previously filed Bingham 10-1 to Bingham 10-2.

Should you determine that it will be necessary to plug and abandon this well, you are hereby requested to immediately notify the following:

PATRICK L. DRISCOLL - Chief Petroleum Engineer
HOME: 582-7247
OFFICE: 533-5771

Enclosed please find Form OGC-8-X, which is to be completed whether or not water sands (aquifers) are encountered during drilling.

The API number assigned to this well is 43-043-30025.

Very truly yours,

DIVISION OF OIL, GAS, AND MINING

CLEON B. FEIGHT
DIRECTOR

CBF:sw

Phone
522-1206 Area 303

LYNES, INC.

Box 712
Sterling, Colo. 80751

Operator American Quasar Petroleum Co.
Address See Distribution
Well Name and No. Bingham #10-1
Ticket No. 2724
Date 7-15-76
DST No. 3
No. Final Copies 17

Contractor	Parker Drlg. Co.	Top Choke	1"
Rig No.	56	Bottom Choke	9/16"
Spot	NW-NE	Size Hole	8 3/4"
Sec.	10	Size Rat Hole	--
Twp.	2 N	Size & Wt. D. P.	4½" 16.60
Rng.	7 E	Size Wt. Pipe	4½" 218'
Field	Pineview	I. D. of D. C.	2 3/4"
County	Summit	Length of D. C.	397'
State	Utah	Total Depth	8700'
Elevation	6778' "K.B."	Interval Tested	8488-8700'
Formation	Twin Creek	Type of Test	Bottom Hole Conventional

Flow No. 1	10	Min.
Shut-in No. 1	60	Min.
Flow No. 2	60	Min.
Shut-in No. 2	120	Min.
Flow No. 3	--	Min.
Shut-in No. 3	--	Min.

Bottom Hole Temp. 158°F
Mud Weight 10.0
Gravity --
Viscosity 43

Tool opened @ 9:37 AM.

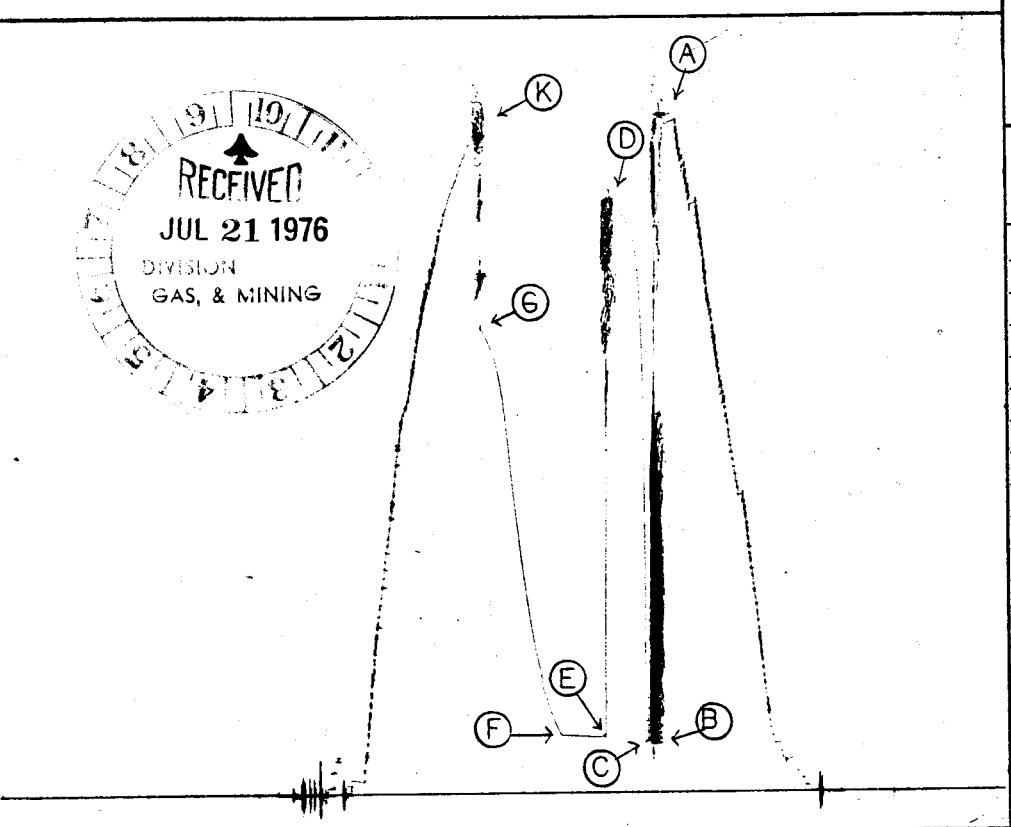

RECEIVED
JUL 21 1976
DIVISION
GAS, & MINING

Inside Recorder

PRD Make Kuster AK-1
No. 3812 Cap. 5100 @ 8468'

Press		Corrected
Initial Hydrostatic	A	4433
Final Hydrostatic	K	4401
Initial Flow	B	*
Final Initial Flow	C	333
Initial Shut-in	D	3896
Second Initial Flow	E	367
Second Final Flow	F	381
Second Shut-in	G	3049
Third Initial Flow	H	--
Third Final Flow	I	--
Third Shut-in	J	--
(*) Unreadiable		
Pressure Below Bottom Packer Bled To		

Our Tester: Perry Eker
Witnessed By: W.M. Sims

Did Well Flow – Gas No Oil No Water No

RECOVERY IN PIPE: 800' Total fluid
400' Heavily gas cut mud = 5.68 Bbl.
400' Heavily gas cut & very slightly oil cut mud = 2.94 Bbl.

REMARKS:
1st Flow- Tool opened with fair 5" underwater blow, increased to good 12" underwater blow at end of flow period.
2nd Flow- Tool opened with weak ½" underwater blow, increased steadily to fair 5" underwater blow at end of flow period.

Lost approximately 12' of mud from surface when tool was opened.

LYNES UNITED SERVICES
DIVISION OF LYNES, INC.

Operator American Quasar Petroleum Co. Lease & No. Bingham #10-1 DST No. 3

Recorder No. 3812 @ 8468'

Initial Shut-In.

0	min.	333	psig.
6	"	3287	"
12	"	3554	"
18	"	3663	"
24	"	3734	"
30	"	3779	"
36	"	3814	"
42	"	3840	"
48	"	3861	"
54	"	3882	"
60	"	3896	"

Final Shut-In

0	min.	381	psig.
12	"	479	"
24	"	622	"
36	"	866	"
48	"	1147	"
60	"	1503	"
72	"	1921	"
84	"	2409	"
96	"	2752	"
108	"	2924	"
120	"	3049	"

LYNES UNITED SERVICES
DIVISION OF LYNES, INC.

Operator American Quasar Petr. Co. Lease & No. Bingham # 10-1 DST No. 3

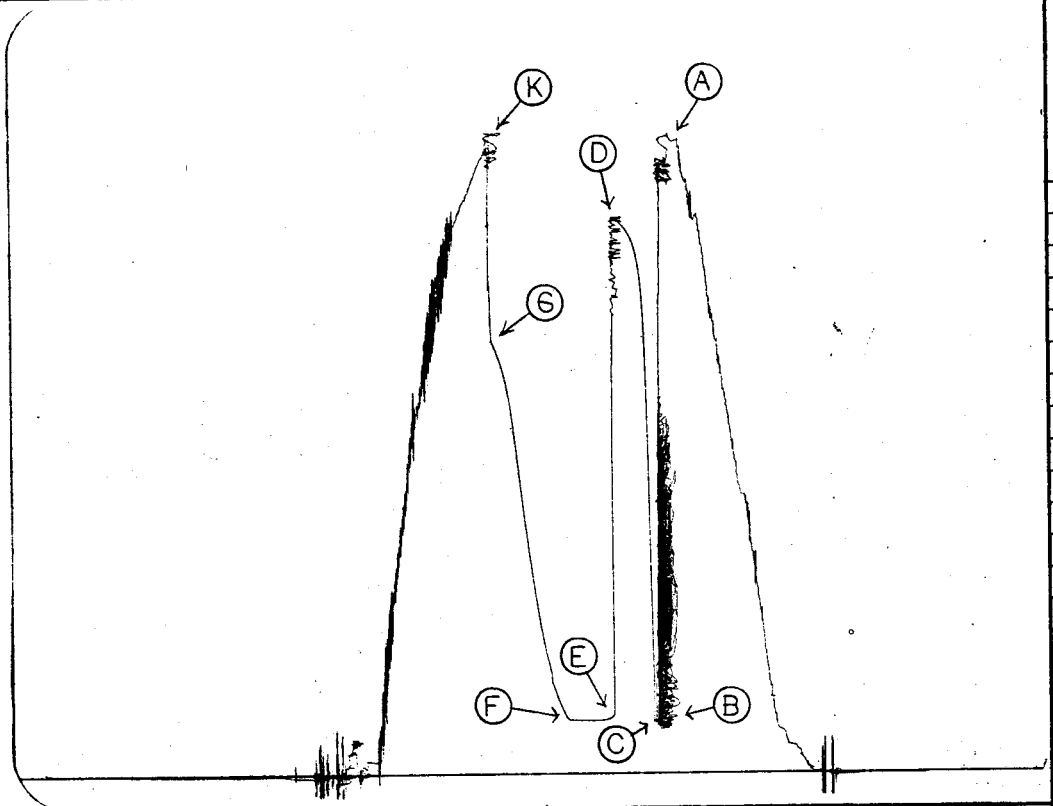

Inside Recorder

PRD Make Kuster AK-1
No. 2559 Cap. 5400 @ 8493'

Press		Corrected
Initial Hydrostatic	A	4455
Final Hydrostatic	K	4412
Initial Flow	B	*
Final Initial Flow	C	359
Initial Shut-in	D	3893
Second Initial Flow	E	382
Second Final Flow	F	384
Second Shut-in	G	3040
Third Initial Flow	H	--
Third Final Flow	I	--
Third Shut-in	J	--
(*) Unreadiable		
Pressure Below Bottom Packer Bled To		

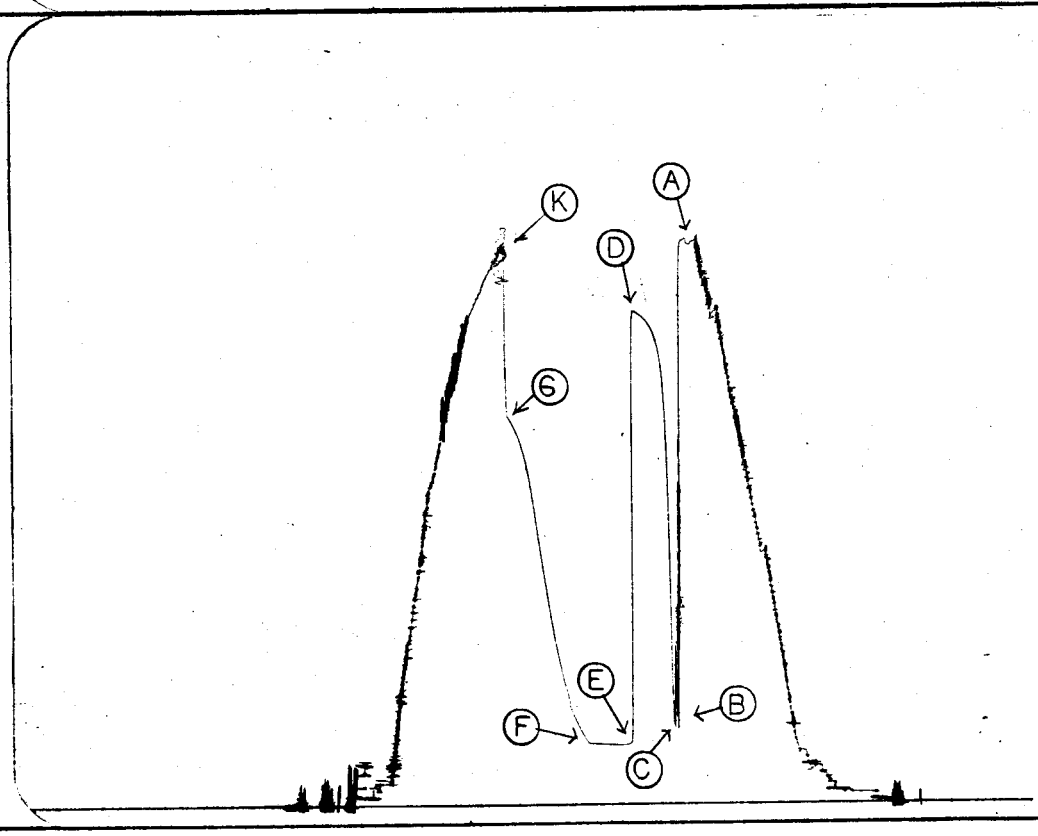

Outside Recorder

PRD Make Kuster AK-1
No. 3861 Cap. 6250 @ 8698'

Press		Corrected
Initial Hydrostatic	A	4487
Final Hydrostatic	K	4453
Initial Flow	B	*
Final Initial Flow	C	536
Initial Shut-in	D	3929
Second Initial Flow	E	399
Second Final Flow	F	413
Second Shut-in	G	3074
Third Initial Flow	H	--
Third Final Flow	I	--
Third Shut-in	J	--
(*) Unreadiable		
Pressure Below Bottom Packer Bled To		

LYNES UNITED SERVICES
DIVISION OF LYNES, INC.

Fluid Sample Report

Date: 7-15-76 Ticket No.: 2724

Company: American Quasar Petroleum Co.

Well Name & No.: Bingham #10-1 DST No.: 3

County: Summit State: Utah

Sampler No.: 10 Test Interval: 8488-8700'

Pressure in Sampler: 175 PSIG BHT: 158 °F

Total Volume of Sampler: 2100 cc.

Total Volume of Sample: 2000 cc.

Oil: Scum cc.

Water: None cc.

Mud: 2000 cc.

Gas: 0.6 cu. ft.

Other: None

Resistivity

Water: @ of Chloride Content ppm.

Mud Pit Sample 0.04 @ 64°F of Chloride Content Saturated ppm.

Gas/Oil Ratio Gravity °API @ °F

Where was sample drained On Location

Remarks:

LYNES UNITED SERVICES
DIVISION OF LYNES, INC.

DISTRIBUTION OF FINAL DST REPORTS

Operator American Quasar Petroleum Co. Lease Bingham Well No. 10-1

Original: American Quasar Petroleum Co., Attn: Clare Gregg, 1630 Denver Club Bldg., Denver, Colorado 80202.

1 Copy: American Quasar Petroleum Co., Attn: Bud Hurley, 332 Pacific Western Life Bldg., Casper, Wyoming 82601.

1 Copy: American Quasar Petroleum Co., Attn: W.M. Bogert, 2500 Ft. Worth National Bank Bldg., Fort Worth, Texas 76102.

1 Copy: American Quasar Petroleum Co., Attn: Herb Ware, 1000 Midland National Bank Tower, Midland, Texas 79701.

2 Copies: Amoco Production Co., Attn: Division Engineering Mgr., Security Life Bldg., Denver, Colorado 80202.

1 Copy; Amoco Production Co., Attn: E.C. Woodall, Box 1400, Riverton, Wyoming 82501.

2 Copies: Sun Oil Co., Attn: J.M. Delong, 300 Writhers Center IV Bldg., Denver, Colorado 80202.

1 Copy: Occidental Petroleum Co., Attn: D.W. Chenot, 5000 Stockdale Hiway, Bakersfield, California 93306.

1 Copy: Energetics, Inc., Attn: Patrick Maher, 333 West Hampden Ave., Englewood, Colorado 80110.

1 Copy: North Central Oil Co., Attn: Howard Lester, Box 27491 Houston, Texas 77027.

1 Copy: Cawley, Gillespie & Assoc., Inc. Attn: Walt Evans, 302 Ft. Worth Club Bldg., Fort Worth, Texas 76102.

1 Copy: V.B. Gras, 777 Ninth Ave., Salt Lake City, Utah 84103.

1 Copy: U.S.G.S., 8426 Federal Bldg., Salt Lake City, Utah 84111.

2 Copies: Utah Division of Oil Gas & Mining, 1588 West, North Temple, Salt Lake City, Utah 84116.

Phone
522-1206 Area 303

LYNES, INC.

Box 712
Sterling, Colo. 80751

Operator American Quasar Petroleum Co.
Address See Distribution
Well Name and No. Bingham # 10-1
Ticket No. 3628
Date 7-10-76
DST No. 2
No. Final Copies 17

Contractor	Parker Drlg. Co.	Top Choke	1"
Rig No.	56	Bottom Choke	9/16"
Spot	NW-NE	Size Hole	8 3/4"
Sec.	10	Size Rat Hole	--
Twp.	2 N	Size & Wt. D. P.	4½" 16.60
Rng.	7 E	Size Wt. Pipe	5" 218'
Field	Pineview	I. D. of D. C.	2 3/4"
County	Summit	Length of D. C.	581'
State	Utah	Total Depth	8490'
Elevation	6778' "K.B."	Interval Tested	8350-8490'
Formation	Twin Creek	Type of Test	Bottom Hole Conventional

Flow No. 1	10	Min.
Shut-in No. 1	60	Min.
Flow No. 2	60	Min.
Shut-in No. 2	120	Min.
Flow No. 3	--	Min.
Shut-in No. 3	--	Min.

Bottom Hole Temp.	158°F
Mud Weight	9.6
Gravity	--
Viscosity	40

Tool opened @ 1:35 AM.

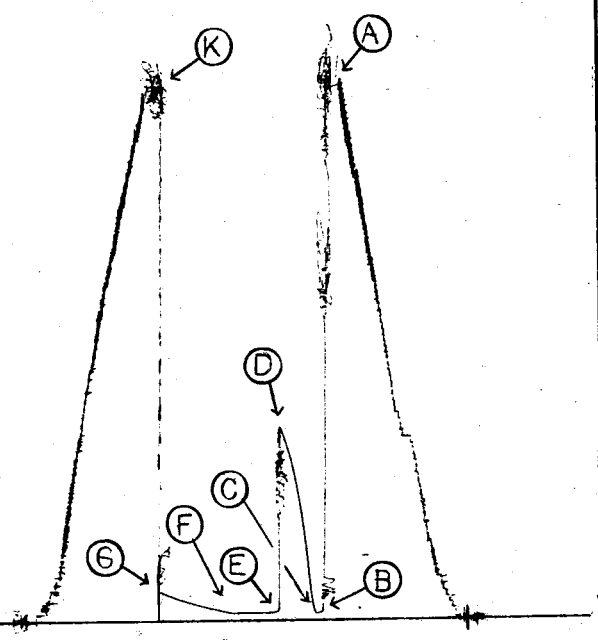

Inside Recorder

PRD Make Kuster AK-1
No. 1105 Cap. 6150 @ 8336'

Press		Corrected
Initial Hydrostatic	A	4183
Final Hydrostatic	K	4136
Initial Flow	B	65
Final Initial Flow	C	53
Initial Shut-in	D	1486
Second Initial Flow	E	60
Second Final Flow	F	53
Second Shut-in	G	230
Third Initial Flow	H	--
Third Final Flow	I	--
Third Shut-in	J	--
Pressure Below Bottom Packer Bled To		

Our Tester: Bob Gustafson
Witnessed By: C.V. Floyd

Did Well Flow – Gas No Oil No Water No

RECOVERY IN PIPE: 15' Drilling mud = 0.11 Bbl.

1st Flow- Tool opened with ¼" underwater blow, decreased to very faint blow.

2nd Flow- Tool opened with no blow, and remained thru flow period.

REMARKS:

Breakdown of shut-in pressures not practical for Horner Extrapolations.

LYNES UNITED SERVICES
DIVISION OF LYNES, INC.

Operator American Quasar Petroleum Co. Lease & No. Bingham # 10-1 DST No. 2

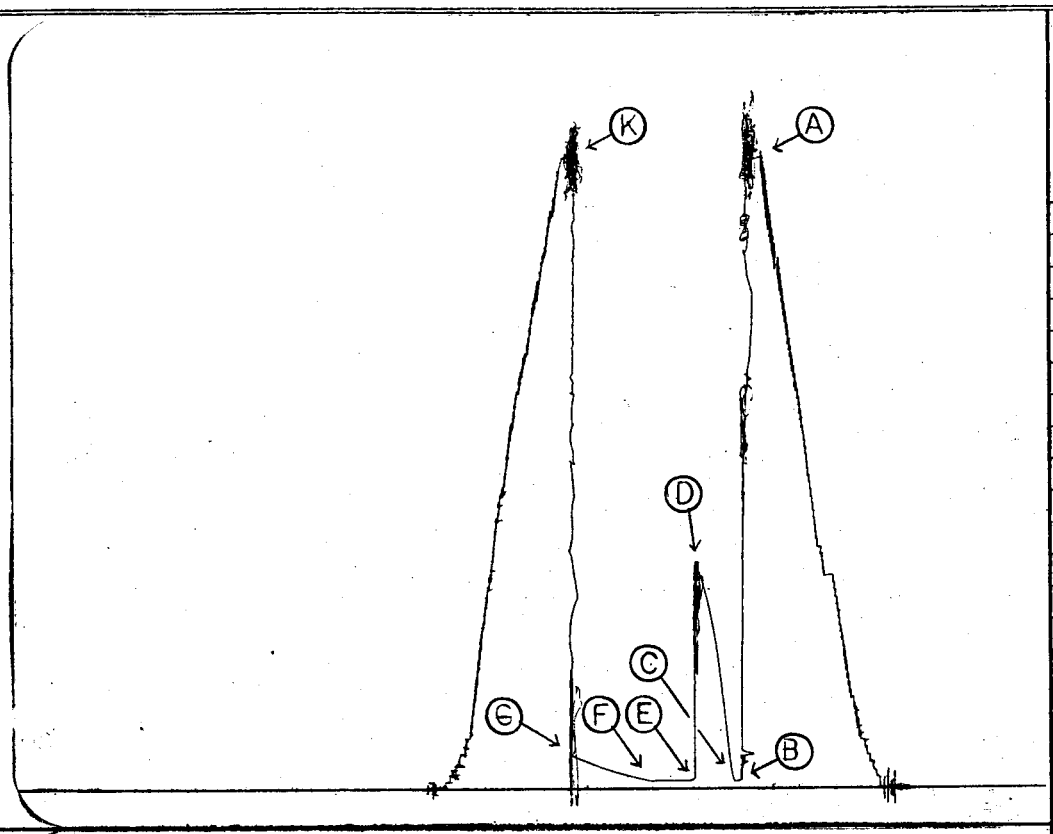

Inside Recorder

PRD Make Kuster AK-1
No. 3812 Cap. 5100 @ 8331'

Press		Corrected
Initial Hydrostatic	A	4175
Final Hydrostatic	K	4128
Initial Flow	B	60
Final Initial Flow	C	48
Initial Shut-in	D	1482
Second Initial Flow	E	62
Second Final Flow	F	49
Second Shut-in	G	224
Third Initial Flow	H	--
Third Final Flow	I	--
Third Shut-in	J	--
Pressure Below Bottom Packer Bled To		

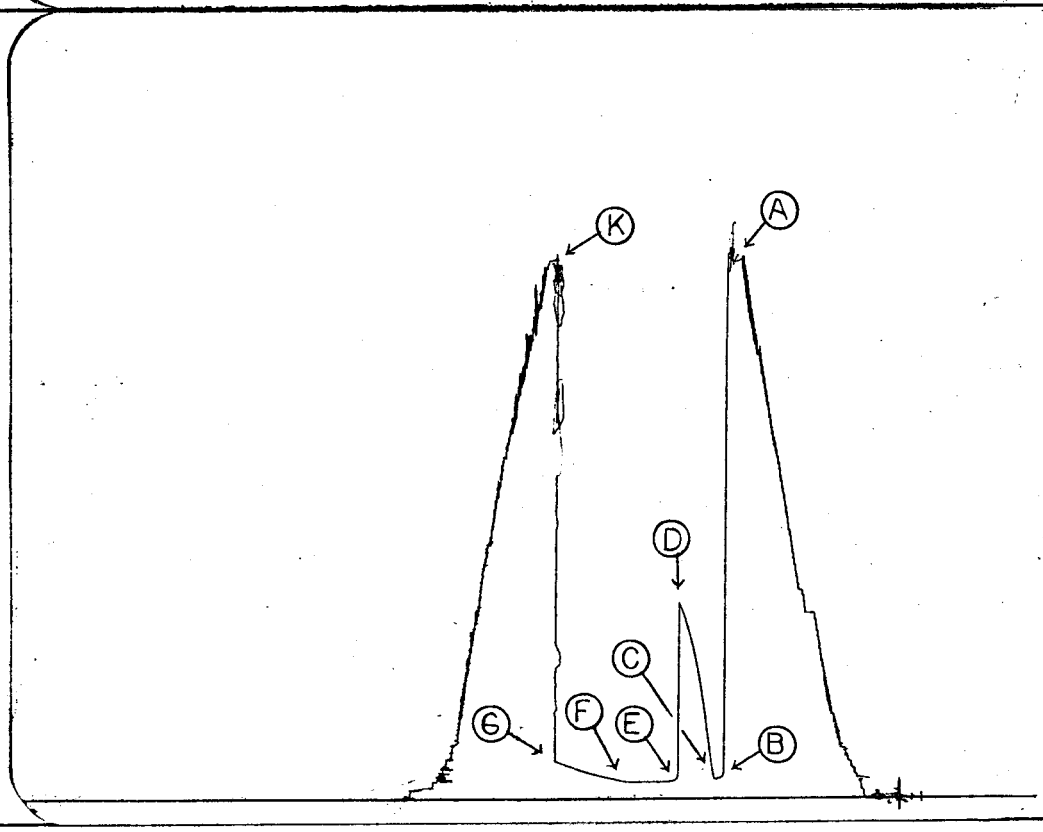

Outside Recorder

PRD Make Kuster AK-1
No. 5563 Cap. 6100 @ 8484'

Press		Corrected
Initial Hydrostatic	A	4234
Final Hydrostatic	K	4185
Initial Flow	B	169
Final Initial Flow	C	151
Initial Shut-in	D	1551
Second Initial Flow	E	149
Second Final Flow	F	129
Second Shut-in	G	292
Third Initial Flow	H	--
Third Final Flow	I	--
Third Shut-in	J	--
Pressure Below Bottom Packer Bled To		

LYNES UNITED SERVICES
DIVISION OF LYNES, INC.

Fluid Sample Report

Date 7-10-76 Ticket No. 3628

Company American Quasar Petroleum Co.

Well Name & No. Bingham # 10-1 DST No. 2

County Summit State Utah

Sampler No. 24 Test Interval 8350-8490'

Pressure in Sampler 0 PSIG BHT 158 °F

Total Volume of Sampler: 2100 cc.

Total Volume of Sample: 2100 cc.

Oil: None cc.

Water: None cc.

Mud: 2100- R.W. 0.095 @ 85°F = 64,000 ppm. cc.

Gas: None cu. ft.

Other: None

Resistivity

Water: @ of Chloride Content ppm.

Mud Pit Sample 0.1 @ 82°F of Chloride Content 62,000 ppm.

Gas/Oil Ratio Gravity °API @ °F

Where was sample drained On Location

Remarks:

LYNES UNITED SERVICES
DIVISION OF LYNES, INC.

DISTRIBUTION OF FINAL DST REPORTS

Operator American Quasar Petroleum Co. Lease Bingham Well No. 10-1

Original: American Quasar Petroleum Co., Attn: Clare Gregg, 1630 Denver Club Bldg., Denver, Colorado 80202.

1 Copy: American Quasar Petroleum Co., Attn: Bud Hurley, 332 Pacific Western Life Bldg., Casper, Wyoming 82601.

1 Copy: American Quasar Petroleum Co., Attn: W.M. Bogert, 2500 Ft. Worth National Bank Bldg., Fort Worth, Texas 76102.

1 Copy: American Quasar Petroleum Co., Attn: Herb Ware, 1000 Midland National Bank Tower, Midland, Texas 79701.

2 Copies: Amoco Production Co., Attn: Division Engineering Mgr., Security Life Bldg., Denver, Colorado 80202.

1 Copy; Amoco Production Co., Attn: E.C. Woodall, Box 1400, Riverton, Wyoming 82501.

2 Copies: Sun Oil Co., Attn: J.M. Delong, 300 Writhers Center IV Bldg., Denver, Colorado 80202.

1 Copy: Occidental Petroleum Co., Attn: D.W. Chenot, 5000 Stockdale Hiway, Bakersfield, California 93306.

1 Copy: Energetics, Inc., Attn: Patrick Maher, 333 West Hampden Ave., Englewood, Colorado 80110.

1 Copy: North Central Oil Co., Attn: Howard Lester, Box 27491 Houston, Texas 77027.

1 Copy: Cawley, Gillespie & Assoc., Inc. Attn: Walt Evans, 302 Ft. Worth Club Bldg., Fort Worth, Texas 76102.

1 Copy: V.B. Gras, 777 Ninth Ave., Salt Lake City, Utah 84103.

1 Copy: U.S.G.S., 8426 Federal Bldg., Salt Lake City, Utah 84111.

2 Copies: Utah Division of Oil Gas & Mining, 1588 West, North Temple, Salt Lake City, Utah 84116.

Phone
522-1206 Area 303

LYNES, INC.

Box 712
Sterling, Colo. 80751

Contractor	Parker Drlg. Co.	Top Choke	1"
Rig No.	56	Bottom Choke	9/16"
Spot	NW-NE	Size Hole	8 3/4"
Sec.	10	Size Rat Hole	--
Twp.	2 N	Size & Wt. D. P.	4½" 16.60
Rng.	7 E	Size Wt. Pipe	4½"
Field	Pineview	I. D. of D. C.	2 3/4"
County	Summit	Length of D. C.	581'
State	Utah	Total Depth	7776'
Elevation	6778' "K.B."	Interval Tested	7698-7776'
Formation	Preuss	Type of Test	Bottom Hole Conventional

Flow No. 1	10	Min.
Shut-in No. 1	60	Min.
Flow No. 2	120	Min.
Shut-in No. 2	210	Min.
Flow No. 3	--	Min.
Shut-in No. 3	--	Min.

Bottom Hole Temp.	147° F
Mud Weight	8.9
Gravity	--
Viscosity	40
Tool opened @	4:40 AM.

Inside Recorder

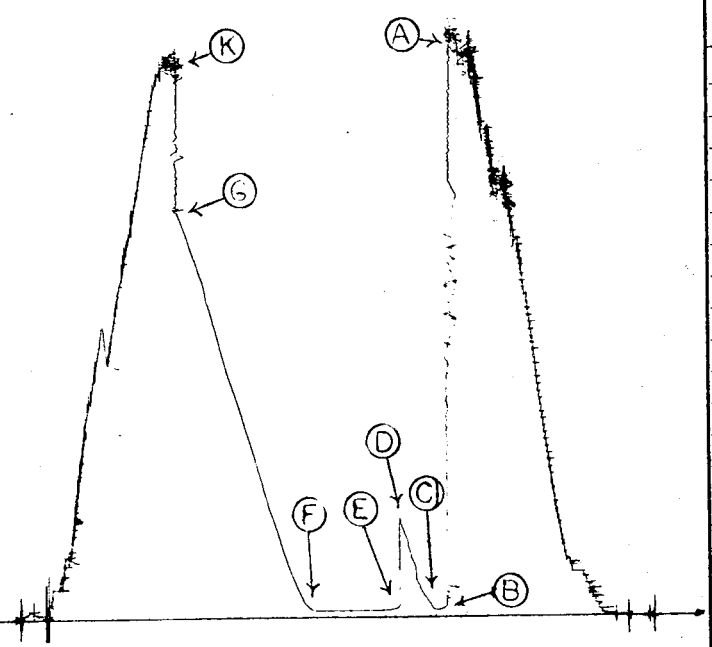

PRD Make Kuster AK-1
No. 3812 Cap. 5100 @ 7703'

Press		Corrected
Initial Hydrostatic	A	3706
Final Hydrostatic	K	3644
Initial Flow	B	64
Final Initial Flow	C	52
Initial Shut-in	D	644
Second Initial Flow	E	59
Second Final Flow	F	46
Second Shut-in	G	2674
Third Initial Flow	H	--
Third Final Flow	I	--
Third Shut-in	J	--
Pressure Below Bottom Packer Bled To		

Our Tester: B. Gustafson
Witnessed By: V.B. Gras

Did Well Flow – Gas No Oil No Water No

RECOVERY IN PIPE: 20' Drilling mud.= .14 Bbl.

1st Flow - Tool opened with surface bubbles and remained thru flow.

2nd Flow - Tool opened with no blow and remained thru flow.

REMARKS: Breakdown of shut-in pressures not practical for Horner Extrapolations.

Operator American Quasar Petroleum Co. Address See Distribution

Well Name and No. Bingham #10-1 Ticket No. 3627

Date 7-6-76 DST No. 1

No. Final Copies 17

LYNES UNITED SERVICES
DIVISION OF LYNES, INC.

Operator American Quasar Petr. Co. Lease & No. Bingham #10-1 DST No. 1

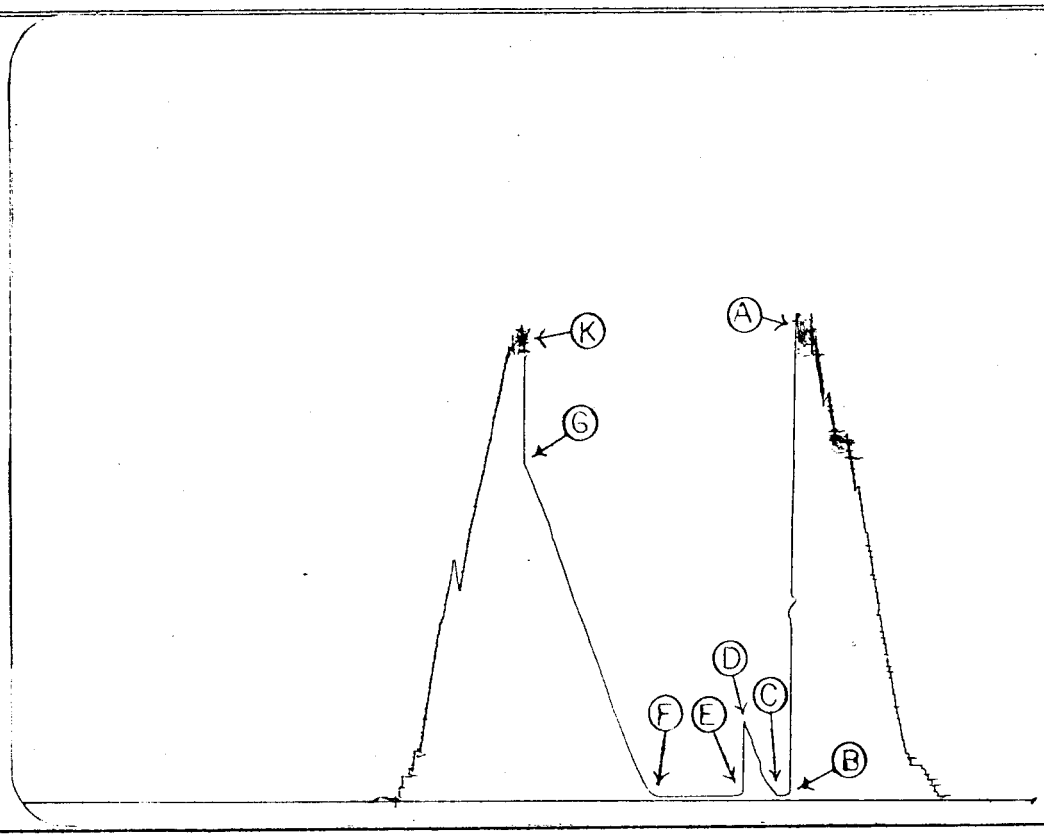

Outside Recorder

PRD Make Kuster AK-1
No. 1105 Cap. 6150 @ 7713'

Press		Corrected
Initial Hydrostatic	A	3697
Final Hydrostatic	K	3638
Initial Flow	B	66
Final Initial Flow	C	42
Initial Shut-in	D	617
Second Initial Flow	E	58
Second Final Flow	F	39
Second Shut-in	G	2625
Third Initial Flow	H	--
Third Final Flow	I	--
Third Shut-in	J	--
Pressure Below Bottom Packer Bled To		

PRD Make
No. Cap. @

Press		Corrected
Initial Hydrostatic	A	
Final Hydrostatic	K	
Initial Flow	B	
Final Initial Flow	C	
Initial Shut-in	D	
Second Initial Flow	E	
Second Final Flow	F	
Second Shut-in	G	
Third Initial Flow	H	
Third Final Flow	I	
Third Shut-in	J	
Pressure Below Bottom Packer Bled To		

LYNES UNITED SERVICES
DIVISION OF LYNES, INC.

Fluid Sample Report

Date 7-6-76 Ticket No. 3627

Company American Quasar Petroleum Co.

Well Name & No. Bingham #10-1 DST No. 1

County Summit State Utah

Sampler No. 24 Test Interval 7698-7776'

Pressure in Sampler 0 PSIG BHT 147 °F

Total Volume of Sampler: 2100 cc.

Total Volume of Sample: 2100 cc.

Oil: None cc.

Water: None cc.

Mud: 2100 - R.W. .12 @ 88° F = 48000 ppm. cc.

Gas: None cu. ft.

Other: None

Resistivity

Water: @ of Chloride Content ppm.

Mud Pit Sample .13 @ 75° F of Chloride Content 51000 ppm.

Gas/Oil Ratio Gravity °API @ °F

Where was sample drained On location.

Remarks:

LYNES UNITED SERVICES
DIVISION OF LYNES, INC.

DISTRIBUTION OF FINAL DST REPORTS

Operator American Quasar Petroleum Co. Lease Bingham Well No. 10-1

Original: American Quasar Petroleum Co., Attn: Clare Gregg, 1630 Denver Club Bldg., Denver, Colorado 80202.

1 Copy: American Quasar Petroleum Co., Attn: Bud Hurley, 332 Pacific Western Life Bldg., Casper, Wyoming 82601.

1 Copy: American Quasar Petroleum Co., Attn: W.M. Bogert, 2500 Ft. Worth National Bank Bldg., Fort Worth, Texas 76102.

1 Copy: American Quasar Petroleum Co., Attn: Herb Ware, 1000 Midland National Bank Tower, Midland, Texas 79701.

2 Copies: Amoco Production Co., Attn: Division Engineering Mgr., Security Life Bldg., Denver, Colorado 80202.

1 Copy; Amoco Production Co., Attn: E.C. Woodall, Box 1400, Riverton, Wyoming 82501.

2 Copies: Sun Oil Co., Attn: J.M. Delong, 300 Writhers Center IV Bldg., Denver, Colorado 80202.

1 Copy: Occidental Petroleum Co., Attn: D.W. Chenot, 5000 Stockdale Hiway, Bakersfield, California 93306.

1 Copy: Energetics, Inc., Attn: Patrick Maher, 333 West Hampden Ave., Englewood, Colorado 80110.

1 Copy: North Central Oil Co., Attn: Howard Lester, Box 27491 Houston, Texas 77027.

1 Copy: Cawley, Gillespie & Assoc., Inc. Attn: Walt Evans, 302 Ft. Worth Club Bldg., Fort Worth, Texas 76102.

1 Copy: V.B. Gras, 777 Ninth Ave., Salt Lake City, Utah 84103.

1 Copy: U.S.G.S., 8426 Federal Bldg., Salt Lake City, Utah 84111.

2 Copies: Utah Division of Oil Gas & Mining, 1588 West, North Temple, Salt Lake City, Utah 84116.

LYNES UNITED SERVICES
DIVISION OF LYNES, INC.

DISTRIBUTION OF FINAL DST REPORTS

Operator American Quasar Petroleum Co. Lease Bingham Well No. 10-1

Original: American Quasar Petroleum Co., Attn: Clare Gregg, 1630 Denver Club Bldg., Denver, Colorado 80202.

1 Copy: American Quasar Petroleum Co., Attn: Bud Hurley, 332 Pacific Western Life Bldg., Casper, Wyoming 82601.

1 Copy: American Quasar Petroleum Co., Attn: W.M. Bogert, 2500 Ft. Worth National Bank Bldg., Fort Worth, Texas 76102.

1 Copy: American Quasar Petroleum Co., Attn: Herb Ware, 1000 Midland National Bank Tower, Midland, Texas 79701.

2 Copies: Amoco Production Co., Attn: Division Engineering Mgr., Security Life Bldg., Denver, Colorado 80202.

1 Copy; Amoco Production Co., Attn: E.C. Woodall, Box 1400, Riverton, Wyoming 82501.

2 Copies: Sun Oil Co., Attn: J.M. Delong, 300 Writhers Center IV Bldg., Denver, Colorado 80202.

1 Copy: Occidental Petroleum Co., Attn: D.W. Chenot, 5000 Stockdale Hiway, Bakersfield, California 93306.

1 Copy: Energetics, Inc., Attn: Patrick Maher, 333 West Hampden Ave., Englewood, Colorado 80110.

1 Copy: North Central Oil Co., Attn: Howard Lester, Box 27491 Houston, Texas 77027.

1 Copy: Cawley, Gillespie & Assoc., Inc. Attn: Walt Evans, 302 Ft. Worth Club Bldg., Fort Worth, Texas 76102.

1 Copy: V.B. Gras, 777 Ninth Ave., Salt Lake City, Utah 84103.

1 Copy: U.S.G.S., 8426 Federal Bldg., Salt Lake City, Utah 84111.

2 Copies: Utah Division of Oil Gas & Mining, 1588 West, North Temple, Salt Lake City, Utah 84116.

Phone
522-1206 Area 303

LYNES, INC.

Box 712
Sterling, Colo. 80751

Operator: American Quasar Petroleum Co.
Address: See Distribution
Well Name and No.: Bingham #10-1
Ticket No.: 3558
Date: 7-19-76
No. Final Copies: 17

Contractor	Parker Drlg. Co.	Top Choke	1"	Flow No. 1	10 Min.
Rig No.	56	Bottom Choke	9/16"	Shut-in No. 1	60 Min.
Spot	NW-NE	Size Hole	8 3/4"	Flow No. 2	60 Min.
Sec.	10	Size Rat Hole	--	Shut-in No. 2	120 Min.
Twp.	2 N	Size & Wt. D. P.	4½" 16.60	Flow No. 3	-- Min.
Rng.	7 E	Size Wt. Pipe	4½"	Shut-in No. 3	-- Min.
Field	Pineview	I. D. of D. C.	2 3/4"		
County	Summit	Length of D. C.	395'		
State	Utah	Total Depth	8950'	Bottom Hole Temp.	158°F
Elevation	6778' "K.B."	Interval Tested	8800-8950'	Mud Weight	10.0
Formation	Twin Creek	Type of Test	Bottom Hole Conventional	Gravity	--
				Viscosity	43
				Tool opened @	7:09 AM.

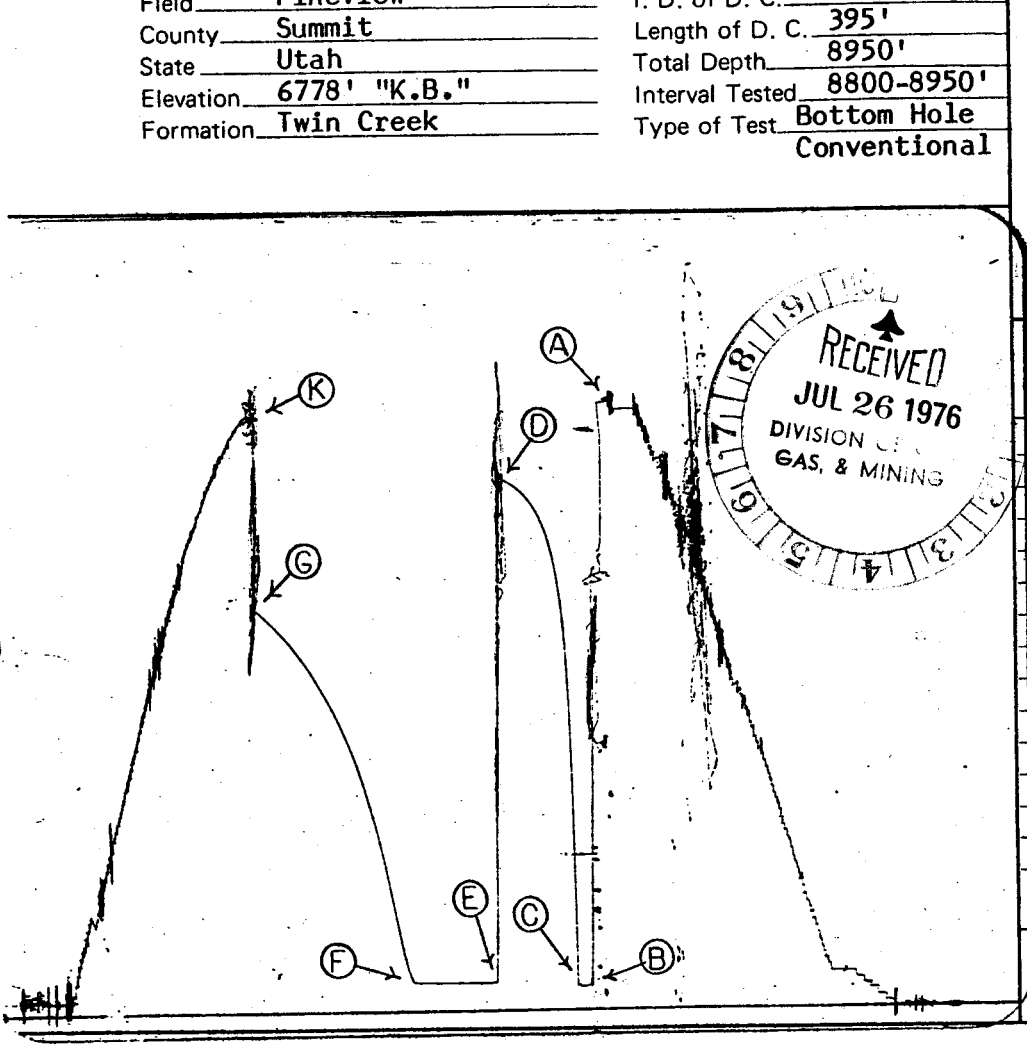

RECEIVED
JUL 26 1976
DIVISION OF
GAS, & MINING

Inside Recorder

PRD Make: Kuster AK-1
No. 5563 Cap. 6100 @ 8781'

		Press	Corrected
Initial Hydrostatic	A		4601
Final Hydrostatic	K		4569
Initial Flow	B		129
Final Initial Flow	C		129
Initial Shut-in	D		4084
Second Initial Flow	E		138
Second Final Flow	F		127
Second Shut-in	G		3051
Third Initial Flow	H		--
Third Final Flow	I		--
Third Shut-in	J		--
Pressure Below Bottom Packer Bled To			

Our Tester: Claude Womack
Witnessed By: Peg Floyd

Did Well Flow – Gas No Oil No Water No
RECOVERY IN PIPE: 200' Mud = 1.46 Bbl.

1st Flow - Tool opened with 2" underwater blow, decreased to 1" underwater blow at end of flow period.

2nd Flow - Tool opened with few surface bubbles. Died in 10 minutes and remained thru flow period.

REMARKS:

LYNES UNITED SERVICES
DIVISION OF LYNES, INC.

Operator American Quasar Petroleum Co. Lease & No. Bingham #10-1 DST No. 4

Recorder No. 5563 @ 8781'

Initial Shut-In

0	min.	129	psig.
6	"	2055	"
12	"	2947	"
18	"	3369	"
24	"	3609	"
30	"	3766	"
36	"	3875	"
42	"	3952	"
48	"	4009	"
54	"	4053	"
60	"	4084	"

Final Shut-In

0	min.	127	psig.
12	"	554	"
24	"	1126	"
36	"	1580	"
48	"	1939	"
60	"	2224	"
72	"	2449	"
84	"	2644	"
96	"	2804	"
108	"	2922	"
120	"	3051	"

LYNES UNITED SERVICES
DIVISION OF LYNES, INC.

Operator American Quasar Petroleum Co. Lease & No. Bingham #10-1 DST No. 4

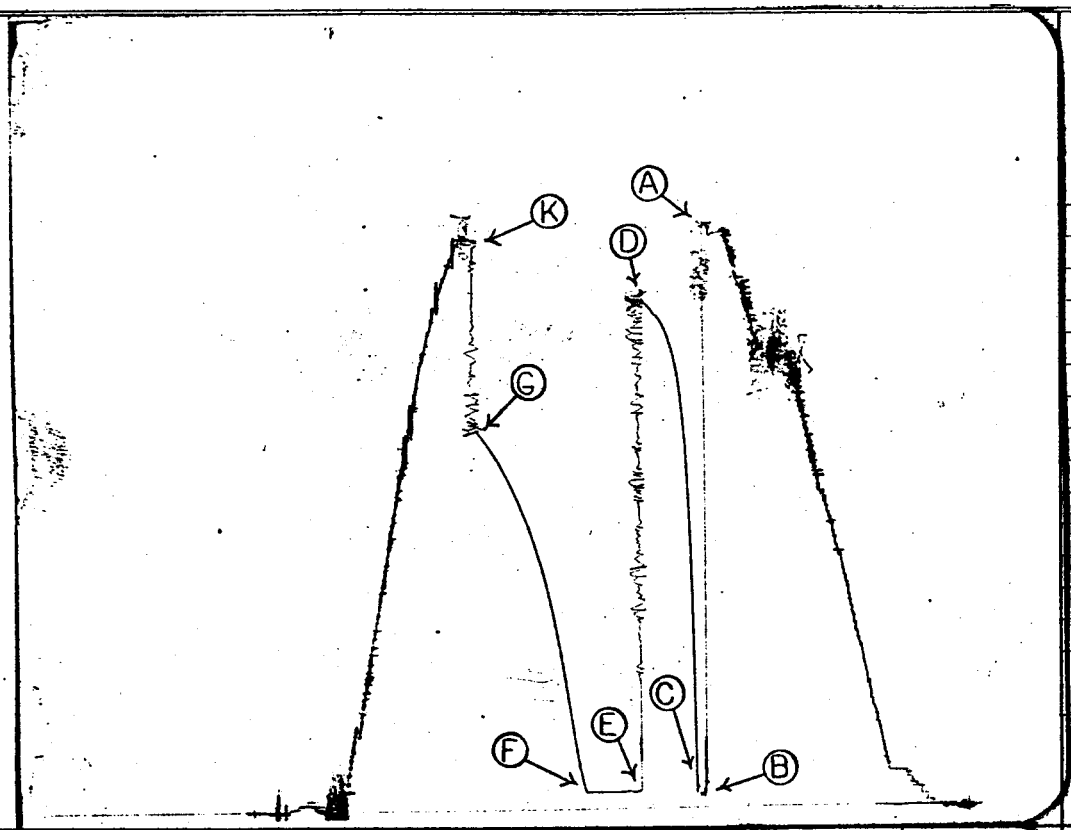

Inside Recorder

PRD Make Kuster AK-1

No. 3861 Cap. 6250 @ 8805'

Press		Corrected
Initial Hydrostatic	A	4609
Final Hydrostatic	K	4578
Initial Flow	B	130
Final Initial Flow	C	130
Initial Shut-in	D	4071
Second Initial Flow	E	143
Second Final Flow	F	129
Second Shut-in	G	3045
Third Initial Flow	H	--
Third Final Flow	I	--
Third Shut-in	J	--
Pressure Below Bottom Packer Bled To		

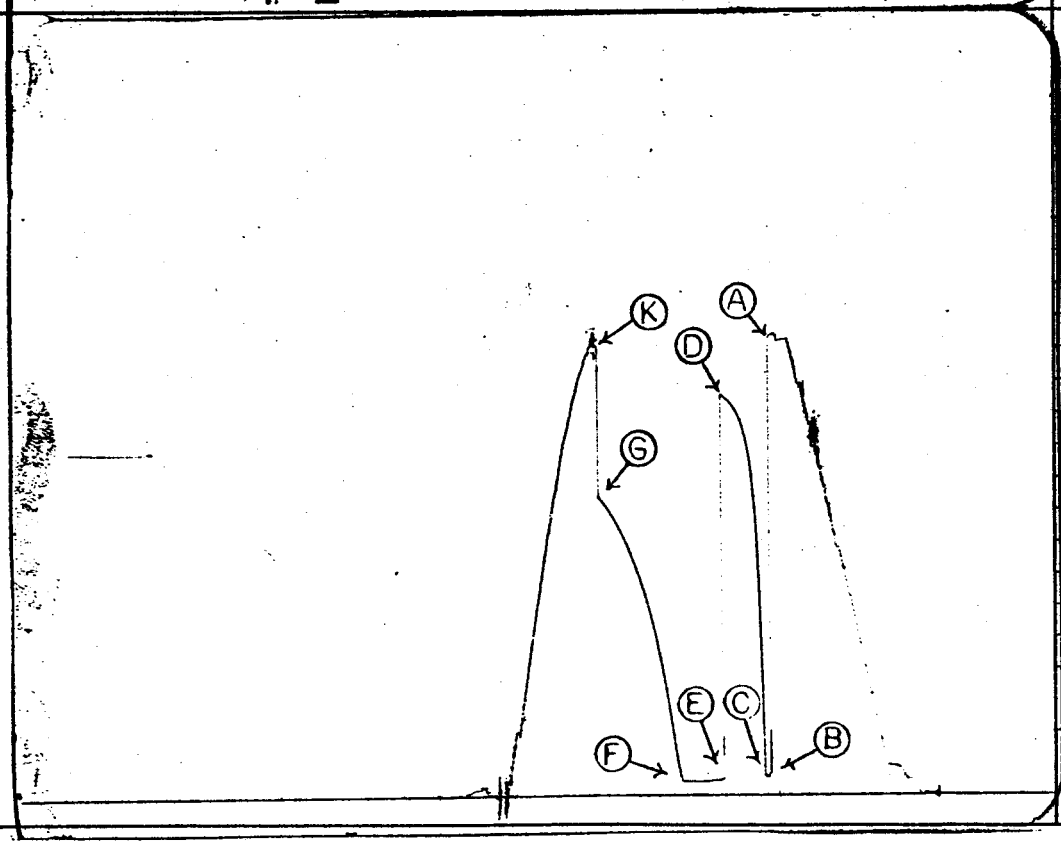

Outside Recorder

PRD Make Kuster AK-1

No. 973 Cap. 7900 @ 8815'

Press		Corrected
Initial Hydrostatic	A	4608
Final Hydrostatic	K	4564
Initial Flow	B	213
Final Initial Flow	C	187
Initial Shut-in	D	4068
Second Initial Flow	E	167
Second Final Flow	F	140
Second Shut-in	G	3036
Third Initial Flow	H	--
Third Final Flow	I	--
Third Shut-in	J	--
Pressure Below Bottom Packer Bled To		

LYNES, INC.

Fluid Sample Report

Date 7-19-76 Ticket No. 3558

Company American Quasar Petroleum Co.

Well Name & No. Bingham #10-1 DST No. 4

County Summit State Utah

Sampler No. 14 Test Interval 8800-8950'

Pressure in Sampler 75 PSIG BHT 158 °F

Total Volume of Sampler: 2100 cc.

Total Volume of Sample: 2100 cc.

Oil: None cc.

Water: None cc.

Mud: 2100 Very slightly gas cut cc.

Gas: -- cu. ft.

Other: None

Resistivity

Water: @ of Chloride Content ppm.

Mud Pit Sample 0.03 @ 72°F of Chloride Content Saturated ppm.

Gas/Oil Ratio Gravity °API @ °F

Where was sample drained On location

Remarks:

(14)

Form DOGC-4

RECEIVED JUL 26 1976 DIV. OF OIL, GAS, & MINING

STATE OF UTAH

DEPARTMENT OF NATURAL RESOURCES

DIVISION OF OIL & GAS CONSERVATION

1588 WEST NORTH TEMPLE
SALT LAKE CITY, UTAH 84116
328-5771

State Lease No. _____
Federal Lease No. _____
Indian Lease No. _____
Fee & Pat. X

REPORT OF OPERATIONS AND WELL STATUS REPORT

STATE Utah COUNTY Summit FIELD/LEASE Pineview

The following is a correct report of operations and production (including drilling and producing wells) for the month of: June, 1976.

Agent's Address 330 Pacific Western Life Bldg.
Casper, Wyoming 82601

Phone No. (307) 265-3362

Company American Quasar Petroleum Co.
Signed A. H. Hurley, Jr.
Title Division Operations Manager

Sec. and ¼ of ¼	Twp.	Range	Well No.	Days Produced	Barrels of Oil	Gravity	Cu. Ft. of Gas (In thousands)	Gallons of Gasoline Recovered	Barrels of Water (if none, so state)	REMARKS (If drilling, depth; if shut down, cause date and result of test for gasoline content of gas)
SEC. 10 NW NE BINGHAM	2N	7E	10-1							Location: 682 FNL & 3,279' FWL. Graded ground elevation: 6,764'. Set 60' of 13-3/8" conductor pipe with 3-1/2 yards of cement. Spudded at 8:00 AM 6-5-76. Drilled to 2,500'. Set 61 jts. of 9-5/8" 36# K-55 casing at 2,500' KB and cemented with 1,100 sax. Now drilling at 7,026' - Incomplete.

GAS: (MCF)
Sold None
Flared/Vented None
Used On/Off Lease None

OIL or CONDENSATE: (To be reported in Barrels)
On hand at beginning of month None
Produced during month None
Sold during month None
Unavoidably lost None
Reason:
On hand at end of month None

DRILLING/PRODUCING WELLS: This report must be filed on or before the sixteenth day of the succeeding month following production for each well. Where a well is temporarily shut-in, a negative report must be filed. *THIS REPORT MUST BE FILED IN DUPLICATE.*

Phone
522-1206 Area 303

LYNES, INC.

Box 712
Sterling, Colo. 80751

Operator American Quasar Petroleum Co.

Address See Distribution

Well Name and No. Bingham # 10-1

Ticket No. 3630

Date 7-23-76

DST No. 3

No. Final Copies 17

Contractor	Parker Drlg. Co.	Top Choke	--
Rig No.	56	Bottom Choke	9/16"
Spot	NW-NE	Size Hole	8 3/4"
Sec.	10	Size Rat Hole	--
Twp.	2 N	Size & Wt. D. P.	4½" 16.60
Rng.	7 E	Size Wt. Pipe	4½" IF. 218'
Field	Pineview	I. D. of D. C.	2 3/4"
County	Summit	Length of D. C.	388'
State	Utah	Total Depth	9234'
Elevation	6778' "K.B."	Interval Tested	9100-9234'
Formation	Twin Creek	Type of Test	Bottom Hole Conventional

Flow No. 1	10	Min.
Shut-in No. 1	60	Min.
Flow No. 2	60	Min.
Shut-in No. 2	120	Min.
Flow No. 3	--	Min.
Shut-in No. 3	--	Min.

Bottom Hole Temp.	170°F
Mud Weight	10.1
Gravity	--
Viscosity	41

Tool opened @ 3:20 AM.

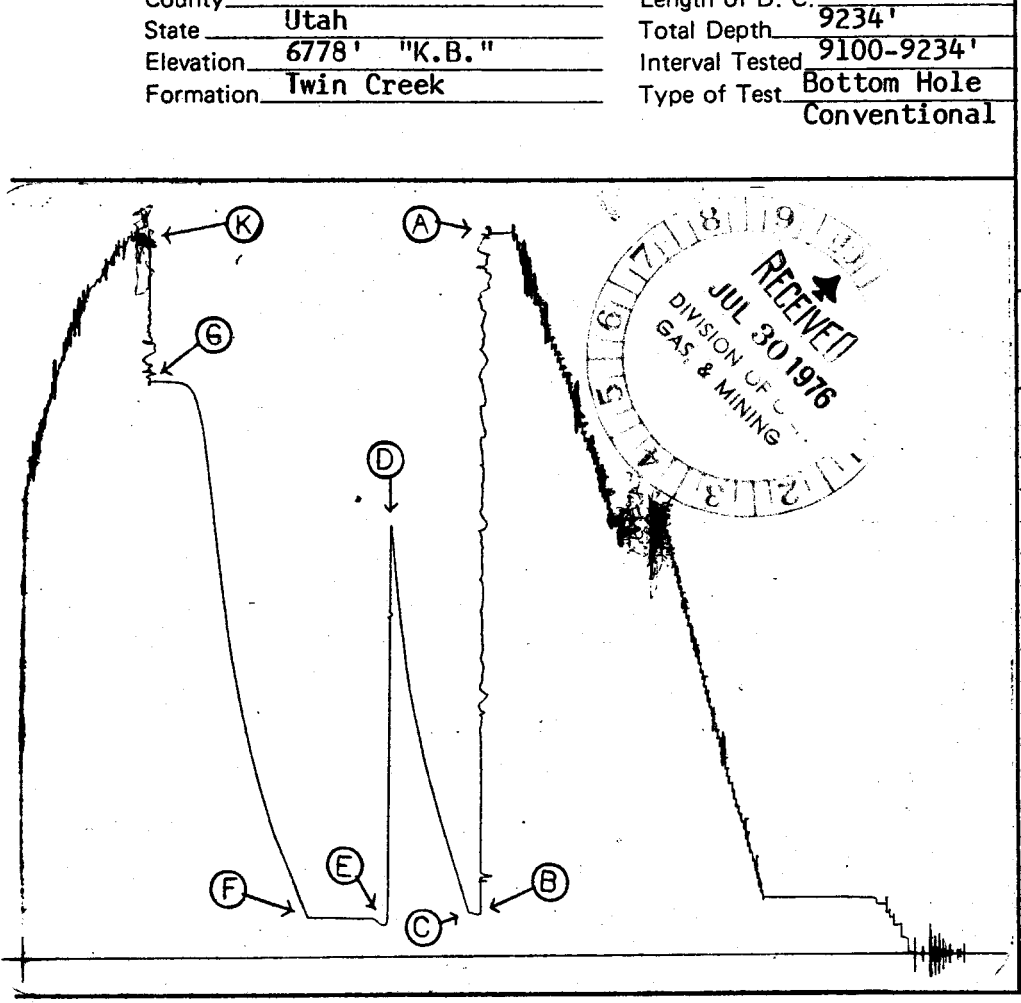

RECEIVED
JUL 30 1976
DIVISION OF OIL, GAS & MINING

Inside Recorder

PRD Make Kuster AK-1
No. 3812 Cap. 5100 @ 9105'

Press		Corrected
Initial Hydrostatic	A	4792
Final Hydrostatic	K	4779
Initial Flow	B	279
Final Initial Flow	C	293
Initial Shut-in	D	2832
Second Initial Flow	E	212
Second Final Flow	F	264
Second Shut-in	G	3802
Third Initial Flow	H	--
Third Final Flow	I	--
Third Shut-in	J	--
Pressure Below Bottom Packer Bled To		

Our Tester: Bob Gustafson

Witnessed By: C.V. Floyd

Did Well Flow – Gas Yes Oil No Water No

RECOVERY IN PIPE:
570' Total fluid
150' Slightly gas cut mud = 2.13 Bbl.
220' Heavy gas & slightly oil cut mud = 1.82 Bbl.
200' Oil cut very fluffy mud = 1.46 Bbl.
Recovery: R.W. 0.06 @ 92°F = 100,000 ppm. chl.

REMARKS:
1st Flow- Tool opened with ½" underwater blow, increased to 2½" underwater blow in 10 minutes.
2nd Flow- Tool opened with strong blow. Gas to surface in 18 minutes, see gas volume report.

LYNES UNITED SERVICES
DIVISION OF LYNES, INC.

Operator American Quasar Petr. Co. Lease & No. Bingham # 10-1 DST No. 5

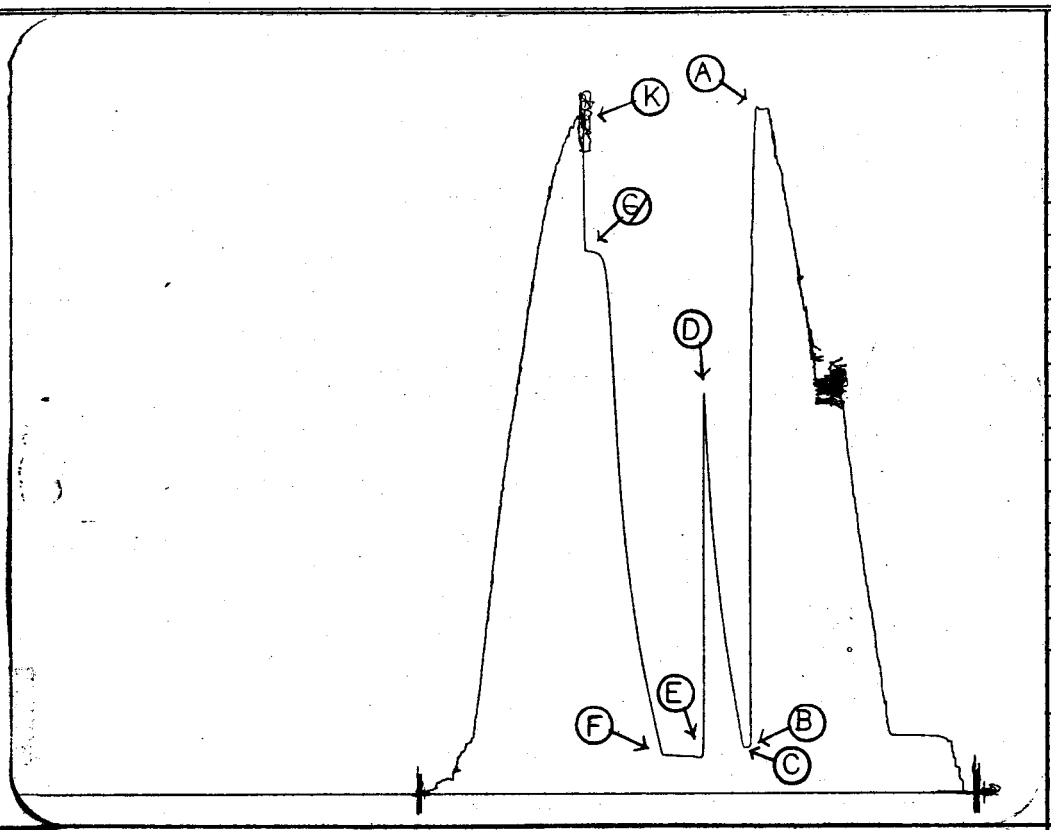

Inside Recorder

PRD Make Kuster AK-1
No. 2559 Cap. 5400 @ 9115'

Press		Corrected
Initial Hydrostatic	A	4824
Final Hydrostatic	K	4754
Initial Flow	B	319
Final Initial Flow	C	316
Initial Shut-in	D	2802
Second Initial Flow	E	246
Second Final Flow	F	265
Second Shut-in	G	3807
Third Initial Flow	H	--
Third Final Flow	I	--
Third Shut-in	J	--
Pressure Below Bottom Packer Bled To		

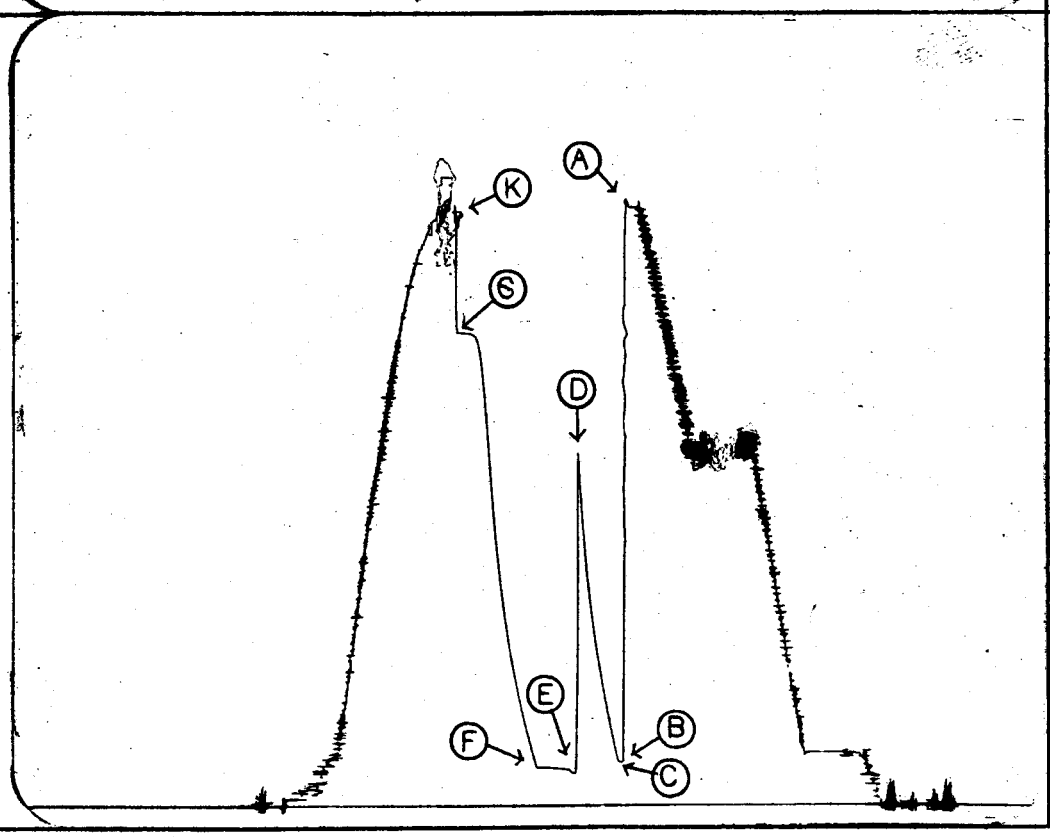

Outside Recorder

PRD Make Kuster AK-1
No. 3861 Cap. 6250 @ 9227'

Press		Corrected
Initial Hydrostatic	A	4872
Final Hydrostatic	K	4838
Initial Flow	B	368
Final Initial Flow	C	368
Initial Shut-in	D	2881
Second Initial Flow	E	276
Second Final Flow	F	322
Second Shut-in	G	3863
Third Initial Flow	H	--
Third Final Flow	I	--
Third Shut-in	J	--
Pressure Below Bottom Packer Bled To		

LYNES, INC.

Operator American Quasar Petr. Lease & No. Bingham # 10-1 DST No. 5

2nd Flow:

Min.	PSIG	Orifice Size	MCF/D	Min.	PSIG	Orifice Size	MCF/D
20	1.0	½"	33.9				
25	3.0	¼"	15.7				
30	2.0	"	12.7				
35	2.0	"	12.7				
40	2.0	"	12.7				
45	2.5	"	14.3				
50	3.0	"	15.7				
55	3.5	"	17.1				
60	3.5	"	17.1				

Remarks:

Form 4

LYNES UNITED SERVICES
DIVISION OF LYNES, INC.

Fluid Sample Report

Date 7-23-76 Ticket No. 3630

Company American Quasar Petroleum Co.

Well Name & No. Bingham # 10-1 DST No. 5

County Summit State Utah

Sampler No. 24 Test Interval 9100-9234'

Pressure in Sampler 250 PSIG BHT 170 °F

Total Volume of Sampler: 2100 cc.

Total Volume of Sample: 1200 cc.

Oil: 200 cc.

Water: None cc.

Mud: 1000 cc.

Gas: 0.85 cu. ft.

Other: None

Resistivity

Water: @ of Chloride Content ppm.

Mud Pit Sample 0.07 @ 75°F of Chloride Content 110,000 ppm.

Gas/Oil Ratio 680 to 1 Gravity °API @ °F

Where was sample drained On Location

Remarks:

LYNES UNITED SERVICES
DIVISION OF LYNES, INC.

BOX 712
STERLING, COLORADO 80751
PHONE 303-522-1206

Comments relative to the analysis of the pressure chart from DST #5, Interval: 9100-9234', in the American Quasar Petroleum Company, Bingham #10-1, NW NE Section 10, T2N-R7E, Summit County, Utah:

Because of the predominance of gas in the recovery of this formation test, the drill-stem-test analysis has been made by the use of the Horner plot method of pressure build-up curve extrapolation and the gas equations shown on the inside of the back cover of this report folder.

For purposes of this analysis, the following gas and reservoir properties have been used:

$T_f = 630°R$, $\mu_g = 0.023$ cp., $Z = 0.89$, $t = 70$ minutes, $h = 10$ feet (estimated), $m = 2181.5 \times 10^3$ psi^2/cycle.

1. The calculated Average Production Rate which was used in this analysis, 14.75 MCFPD, is based upon an average of the reported flow rates which were gauged from 25 through 60 minutes of the Final Flow period.

2. The estimated Damage Ratio of 1.5 indicates that slight wellbore damage was present at the time of this formation test. The Damage Ratio implies that the Average Production Rate should have been 1.5 times greater than that which occurred if wellbore damage had not been present.

3. The character of the Initial Shut-in pressure build-up curve and its extrapolation plot indicate that "steady-state" conditions were not attained during the Initial Shut-in period. It is therefore impossible to determine a reliable extrapolated Initial Shut-in pressure. Extrapolation of the Final Shut-in pressure build-up curve indicates a maximum reservoir pressure of 3859 psi at the recorder depth of 9105 feet.

4. The calculated Effective Transmissibility of 6.2 md.-ft./cp. indicates an Average Permeability to gas of 0.01 md. for the reported 10 feet of effective porosity within the total 134 feet of interval tested.

American Quasar Petroleum Company, Bingham #10-1
Interval: 9100-9234' (DST #5)

Comments - Page 2

5. The radius of investigation of this test is indicated by the relationship, $b \approx 0.02 \sqrt{kt_o P_o}$ to be about 1.2 feet.

6. The evaluation criteria used in the Drill-Stem-Test Analysis System indicate that the results obtained in this analysis should be reliable within reasonable limits relative to the assumptions which have been made.

Roger L. Hoeger
Consultant for Lynes, Inc.

LYNES UNITED SERVICES
DIVISION OF LYNES, INC.

Operator American Quasar Petroleum Co Lease & No. Bingham #10-1 DST No. 5

Recorder No. 3812 @ 9105'

SECOND SHUT IN PRESSURE:

TIME(MIN) PHI	(T"PHI) /PHI	PSIG	PSIG SQ /10 E6
0.0	0.0000	264	0.0697
12.0	6.8333	501	0.2510
24.0	3.9167	755	0.5700
36.0	2.9444	1086	1.1794
48.0	2.4583	1508	2.2741
60.0	2.1667	2062	4.2518
72.0	1.9722	2940	8.6436
84.0	1.8333	3663	13.4176
96.0	1.7292	3789	14.3565
108.0	1.6481	3799	14.4324
120.0	1.5833	3802	14.4552

EXTRAPLN OF SHUT IN : 3858.8 M : 2181531.8

RESERVOIR PARAMETERS:

RESRV TMP	630.000	BTM HMLMP	170.000	SPEC GRAVTY	0.700
VISCOSITY	0.023	Z FACTOR	0.890	DST GAS RT.	14.750
WELL RAD.	0.360	PAY THICK	10.000	SUBSEA DPTH	-2327.000
WTR GRDNT	0.433				

CALCULATIONS: FIRST SHUT IN

EXTRAP PRESS(PSIG).....	3858.8
NO OF PTS ENTERED.....	11.0
NO OF PTS USED.....	3.0
RMS DEVIATION(PSI).....	0.006
TOTL FLO TIM(MIN).....	70.0
TRANSMISS(MD-FT/CP).....	6.2
IN SITU CAP(MD-FT).....	0.1
AVE EFFECT PERM(MD).....	0.01
RAD OF INVEST(FT).....	1.2
ACTUAL CAPACITY(MD-FT).....	0.0
DAMAGE RATIO.....	16.1
ESTIMATED DAMAGE RATIO.....	1.5
MAX AOF(MCF/D).....	14.8
MINUOF(MCF/D).....	14.8
MAX AOF-DAMAGE(MCF/D).....	238.1
MIN AOF-DAMAGE(MCF/D).....	237.5
DRAWDOWN(PERCENT).....	0.0
POTENMETRC SURF(FT).....	6584.9

LYNES UNITED SERVICES LTD.

WELL: R PET. BINGHAM 10-1AMERICAN BURSAR PLOCN: DATE: 07-27-76

DST NO. 5

REC. NO. 3812

DEPTH 0

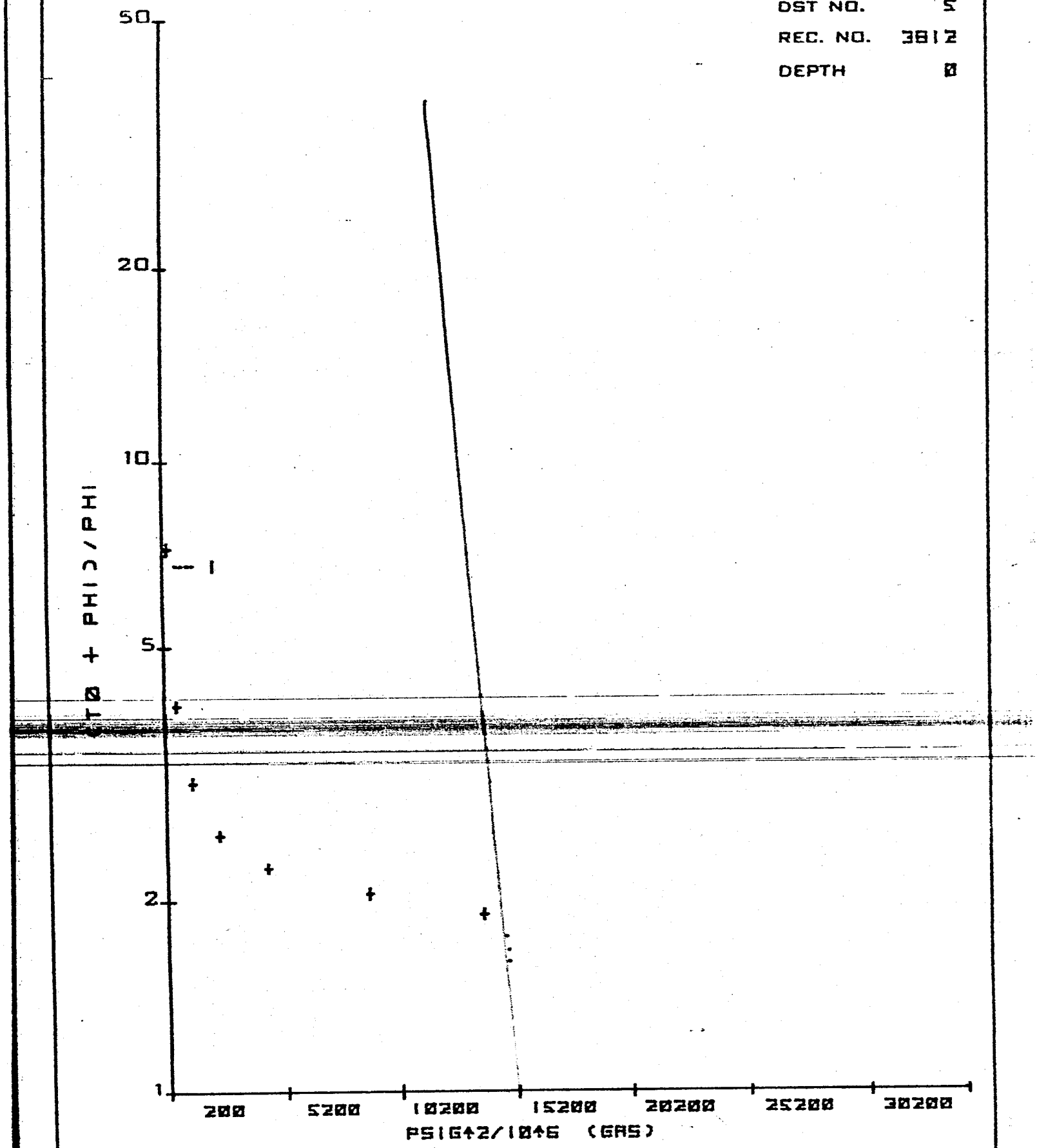

PRESSURE EXTRAPOLATION PLOT

Form 103

LYNES UNITED SERVICES
DIVISION OF LYNES, INC.

DISTRIBUTION OF FINAL DST REPORTS

Operator American Quasar Petroleum Co. Lease Bingham Well No. 10-1

Original: American Quasar Petroleum Co., Attn: Clare Gregg, 1630 Denver Club Bldg., Denver, Colorado 80202.

1 Copy: American Quasar Petroleum Co., Attn: Bud Hurley, 332 Pacific Western Life Bldg., Casper, Wyoming 82601.

1 Copy: American Quasar Petroleum Co., Attn: W.M. Bogert, 2500 Ft. Worth National Bank Bldg., Fort Worth, Texas 76102.

1 Copy: American Quasar Petroleum Co., Attn: Herb Ware, 1000 Midland National Bank Tower, Midland, Texas 79701.

2 Copies: Amoco Production Co., Attn: Division Engineering Mgr., Security Life Bldg., Denver, Colorado 80202.

1 Copy; Amoco Production Co., Attn: E.C. Woodall, Box 1400, Riverton, Wyoming 82501.

2 Copies: Sun Oil Co., Attn: J.M. Delong, 300 Writhers Center IV Bldg., Denver, Colorado 80202.

1 Copy: Occidental Petroleum Co., Attn: D.W. Chenot, 5000 Stockdale Hiway, Bakersfield, California 93306.

1 Copy: Energetics, Inc., Attn: Patrick Maher, 333 West Hampden Ave., Englewood, Colorado 80110.

1 Copy: North Central Oil Co., Attn: Howard Lester, Box 27491 Houston, Texas 77027.

1 Copy: Cawley, Gillespie & Assoc., Inc. Attn: Walt Evans, 302 Ft. Worth Club Bldg., Fort Worth, Texas 76102.

1 Copy: V.B. Gras, 777 Ninth Ave., Salt Lake City, Utah 84103.

1 Copy: U.S.G.S., 8426 Federal Bldg., Salt Lake City, Utah 84111.

2 Copies: Utah Division of Oil Gas & Mining, 1588 West, North Temple, Salt Lake City, Utah 84116.

Phone
522-1206 Area 303

LYNES, INC.

Box 712
Sterling, Colo. 80751

Operator: American Quasar Petroleum Co.
Address: See Distribution
Well Name and No.: Bingham #10-1
Ticket No.: 3728
Date: 7-28-76
DST No.: 6
No. Final Copies: 17

Contractor	Parker Drlg. Co.	Top Choke	3/8"
Rig No.	56	Bottom Choke	9/16"
Spot	NW-NE	Size Hole	8 3/4"
Sec.	10	Size Rat Hole	--
Twp.	2 N	Size & Wt. D. P.	4½" 16.60
Rng.	7 E	Size Wt. Pipe	4½"
Field	Pineview	I. D. of D. C.	2½"
County	Summit	Length of D. C.	291'
State	Utah	Total Depth	9500'
Elevation	6778' "K.B."	Interval Tested	9275-9500'
Formation	Twin Creek	Type of Test	Bottom Hole Conventional

Flow No. 1	10	Min.
Shut-in No. 1	60	Min.
Flow No. 2	63	Min.
Shut-in No. 2	120	Min.
Flow No. 3	--	Min.
Shut-in No. 3	--	Min.

Bottom Hole Temp.	167°F
Mud Weight	10.0
Gravity	--
Viscosity	38

Tool opened @ 9:03 AM.

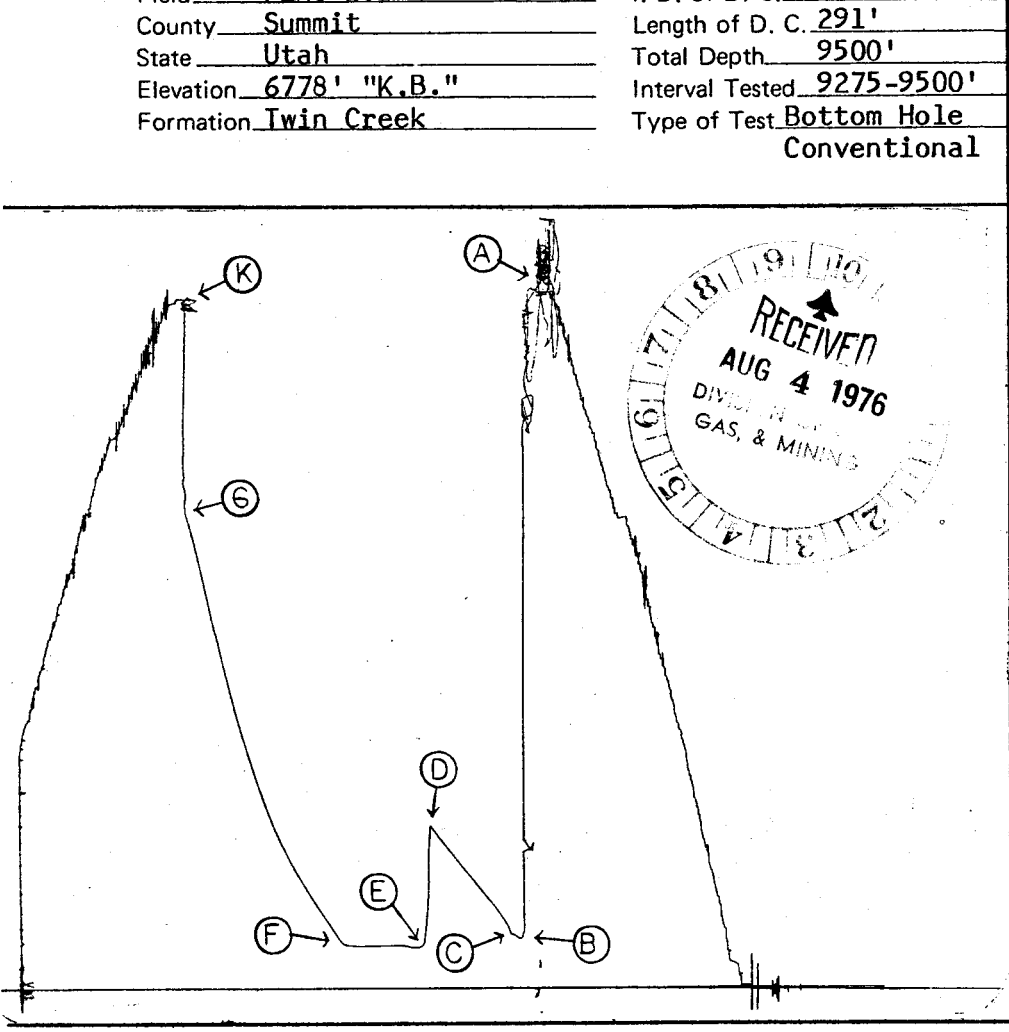

RECEIVED
AUG 4 1976
DIVISION OF OIL, GAS, & MINING

Inside Recorder

PRD Make Kuster AK-1
No. 2559 Cap. 5400 @ 9280'

Press		Corrected
Initial Hydrostatic	A	4913
Final Hydrostatic	K	4836
Initial Flow	B	399
Final Initial Flow	C	378
Initial Shut-in	D	1136
Second Initial Flow	E	294
Second Final Flow	F	312
Second Shut-in	G	3332
Third Initial Flow	H	--
Third Final Flow	I	--
Third Shut-in	J	--
Pressure Below Bottom Packer Bled To		

Our Tester: Perry Eker
Witnessed By: W.M. Sims

Did Well Flow – Gas Yes Oil No Water No

RECOVERY IN PIPE: 638' Total Fluid
422' Gas cut mud = 5.39 Bbl.
216' Gas & oil cut mud = 1.32 Bbl.

REMARKS:

1st Flow - Tool opened with weak 1" underwater blow, increased to fair blow to bottom of bucket in 8 minutes and remained thru flow period.

2nd Flow - Tool opened with fair 5" underwater blow, increased to strong blow to bottom of bucket in ½ minute. Gas to surface in 14 minutes, see gas volume report.

LYNES UNITED SERVICES
DIVISION OF LYNES, INC.

Operator American Quasar Petroleum Co Lease & No. Bingham #10-1 DST No. 6

Initial Shut-In

0	min.	378	psig.
6	"	484	"
12	"	566	"
18	"	634	"
24	"	703	"
30	"	773	"
36	"	842	"
42	"	911	"
48	"	984	"
54	"	1057	"
60	"	1136	"

Final Shut-In

0	min.	312	psig.
12	"	453	"
24	"	620	"
36	"	801	"
48	"	1013	"
60	"	1276	"
72	"	1604	"
84	"	1973	"
96	"	2417	"
108	"	2898	"
120	"	3332	"

LYNES UNITED SERVICES
DIVISION OF LYNES, INC.

Operator American Quasar Petroleum Co Lease & No. Bingham #10-1 DST No. 6

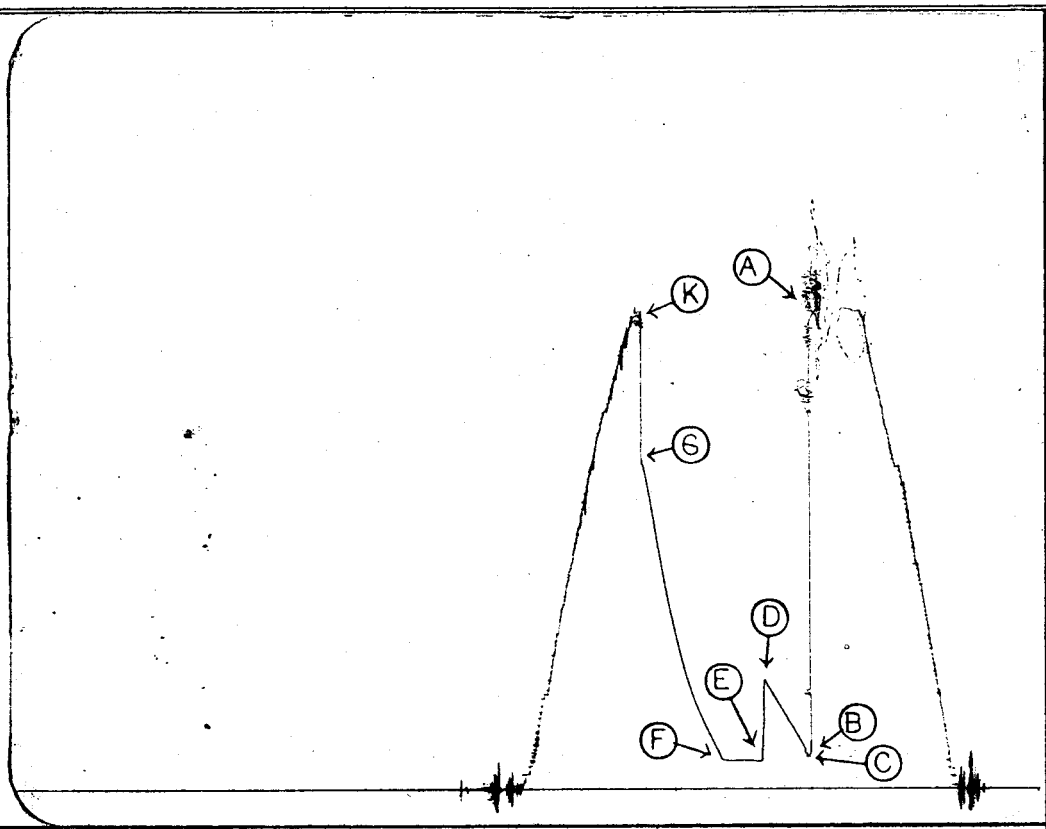

Inside Recorder

PRD Make Kuster AK-1
No. 973 Cap. 7900 @ 9285'

Press		Corrected
Initial Hydrostatic	A	4922
Final Hydrostatic	K	4842
Initial Flow	B	387
Final Initial Flow	C	366
Initial Shut-in	D	1134
Second Initial Flow	E	301
Second Final Flow	F	317
Second Shut-in	G	3331
Third Initial Flow	H	--
Third Final Flow	I	--
Third Shut-in	J	--
Pressure Below Bottom Packer Bled To		

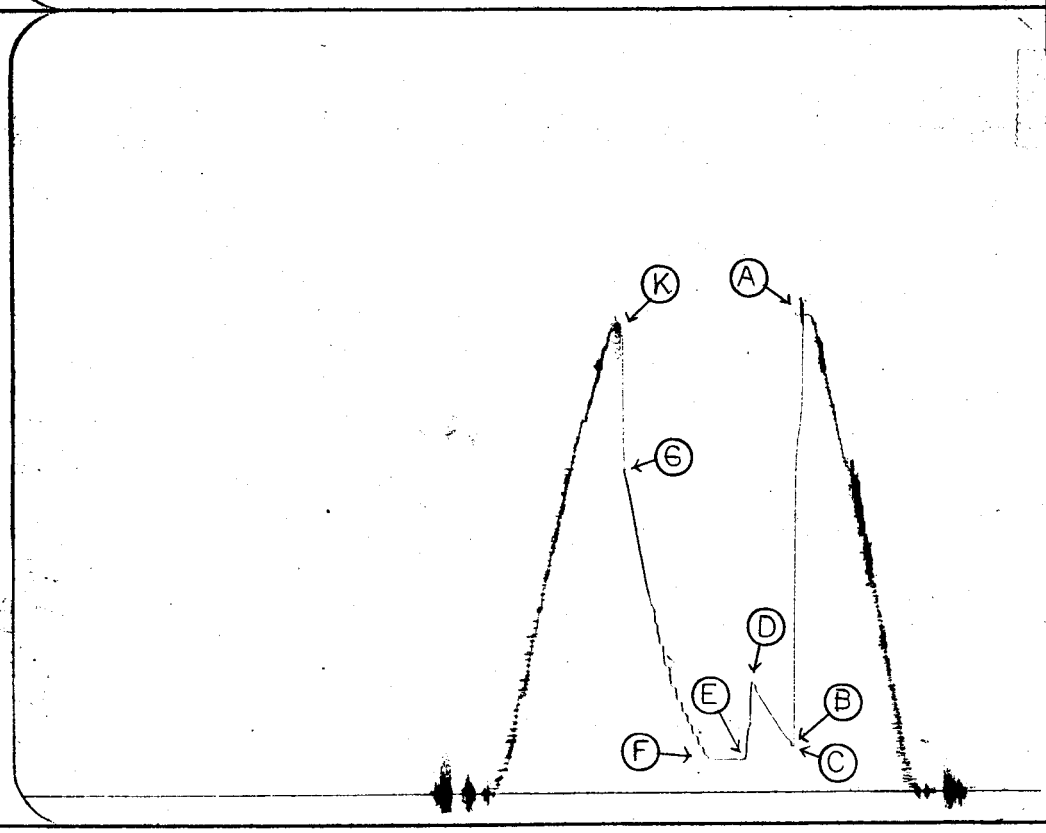

Outside Recorder

PRD Make Kuster AK-1
No. 1478 Cap. 8100 @ 9498'

Press		Corrected
Initial Hydrostatic	A	5048
Final Hydrostatic	K	4907
Initial Flow	B	494
Final Initial Flow	C	491
Initial Shut-in	D	1137
Second Initial Flow	E	366
Second Final Flow	F	367
Second Shut-in	G	3349
Third Initial Flow	H	--
Third Final Flow	I	--
Third Shut-in	J	--
Pressure Below Bottom Packer Bled To		

LYNES, INC.

Operator American Quasar Petr. Lease & No. Bingham #10-1 DST No. 6

2nd Flow:

Min.	PSIG	Orifice Size	MCF/D	Min.	PSIG	Orifice Size	MCF/D
15	18	3/8"	93.3				
20	16	"	86.8				
25	14	"	79.7				
30	12	"	72.6				
35	10	"	65.3				
40	9	"	61.4				
45	8	"	57.3				
50	7	"	53.2				
55	6	"	48.8				
60	6	"	48.8				
62	6	"	48.8				

Remarks:

Form 4

LYNES UNITED SERVICES
DIVISION OF LYNES, INC.

Fluid Sample Report

Date 7-28-76 Ticket No., 3728

Company American Quasar Petroleum Co,

Well Name & No. Bingham #10-1 DST No. 6

County Summit State Utah

Sampler No. 10 Test Interval 9275-9500'

Pressure in Sampler 75 PSIG BHT 167 °F

Total Volume of Sampler: 2100 cc.

Total Volume of Sample: 1400 cc.

Oil: 1400 Heavily gas & mud cut oil cc.

Water: None cc.

Mud: -- cc.

Gas: 1.6 cu. ft.

Other: None

Resistivity

Water: @ of Chloride Content ppm.

Mud Pit Sample 0.05 @ 82°F of Chloride Content 160,000 ppm.

Gas/Oil Ratio 190-1 Gravity °API @ °F

Where was sample drained On location

Remarks: Rig Water: R.W. 1.2 @ 65°F = 5400 ppm. chl.

LYNES UNITED SERVICES
DIVISION OF LYNES, INC.

DISTRIBUTION OF FINAL DST REPORTS

Operator American Quasar Petroleum Co. Lease Bingham Well No. 10-1

Original: American Quasar Petroleum Co., Attn: Clare Gregg, 1630 Denver Club Bldg., Denver, Colorado 80202.

1 Copy: American Quasar Petroleum Co., Attn: Bud Hurley, 332 Pacific Western Life Bldg., Casper, Wyoming 82601.

1 Copy: American Quasar Petroleum Co., Attn: W.M. Bogert, 2500 Ft. Worth National Bank Bldg., Fort Worth, Texas 76102.

1 Copy: American Quasar Petroleum Co., Attn: Herb Ware, 1000 Midland National Bank Tower, Midland, Texas 79701.

2 Copies: Amoco Production Co., Attn: Division Engineering Mgr., Security Life Bldg., Denver, Colorado 80202.

1 Copy; Amoco Production Co., Attn: E.C. Woodall, Box 1400, Riverton, Wyoming 82501.

2 Copies: Sun Oil Co., Attn: J.M. Delong, 300 Writhers Center IV Bldg., Denver, Colorado 80202.

1 Copy: Occidental Petroleum Co., Attn: D.W. Chenot, 5000 Stockdale Hiway, Bakersfield, California 93306.

1 Copy: Energetics, Inc., Attn: Patrick Maher, 333 West Hampden Ave., Englewood, Colorado 80110.

1 Copy: North Central Oil Co., Attn: Howard Lester, Box 27491 Houston, Texas 77027.

1 Copy: Cawley, Gillespie & Assoc., Inc. Attn: Walt Evans, 302 Ft. Worth Club Bldg., Fort Worth, Texas 76102.

1 Copy: V.B. Gras, 777 Ninth Ave., Salt Lake City, Utah 84103.

1 Copy: U.S.G.S., 8426 Federal Bldg., Salt Lake City, Utah 84111.

2 Copies: Utah Division of Oil Gas & Mining, 1588 West, North Temple, Salt Lake City, Utah 84116.

Phone
522-1206 Area 303

LYNES, INC.

Box 712
Sterling, Colo. 80751

Contractor	Parker Drlg. Co.	Top Choke	1"
Rig No.	56	Bottom Choke	9/16"
Spot	NW-NE	Size Hole	7 7/8"
Sec.	10	Size Rat Hole	--
Twp.	2 N	Size & Wt. D. P.	4½" 16.60
Rng.	7 E	Size Wt. Pipe	4½"
Field	Pineview	I. D. of D. C.	2½"
County	Summit	Length of D. C.	303'
State	Utah	Total Depth	9668'
Elevation	6778' "K.B."	Interval Tested	9500-9668'
Formation	Gyp Springs	Type of Test	Bottom Hole Conventional

Flow No. 1	10	Min.
Shut-in No. 1	60	Min.
Flow No. 2	60	Min.
Shut-in No. 2	120	Min.
Flow No. 3	--	Min.
Shut-in No. 3	--	Min.

Bottom Hole Temp.	173°F
Mud Weight	10.3
Gravity	--
Viscosity	40

Tool opened @ 11:30 PM.

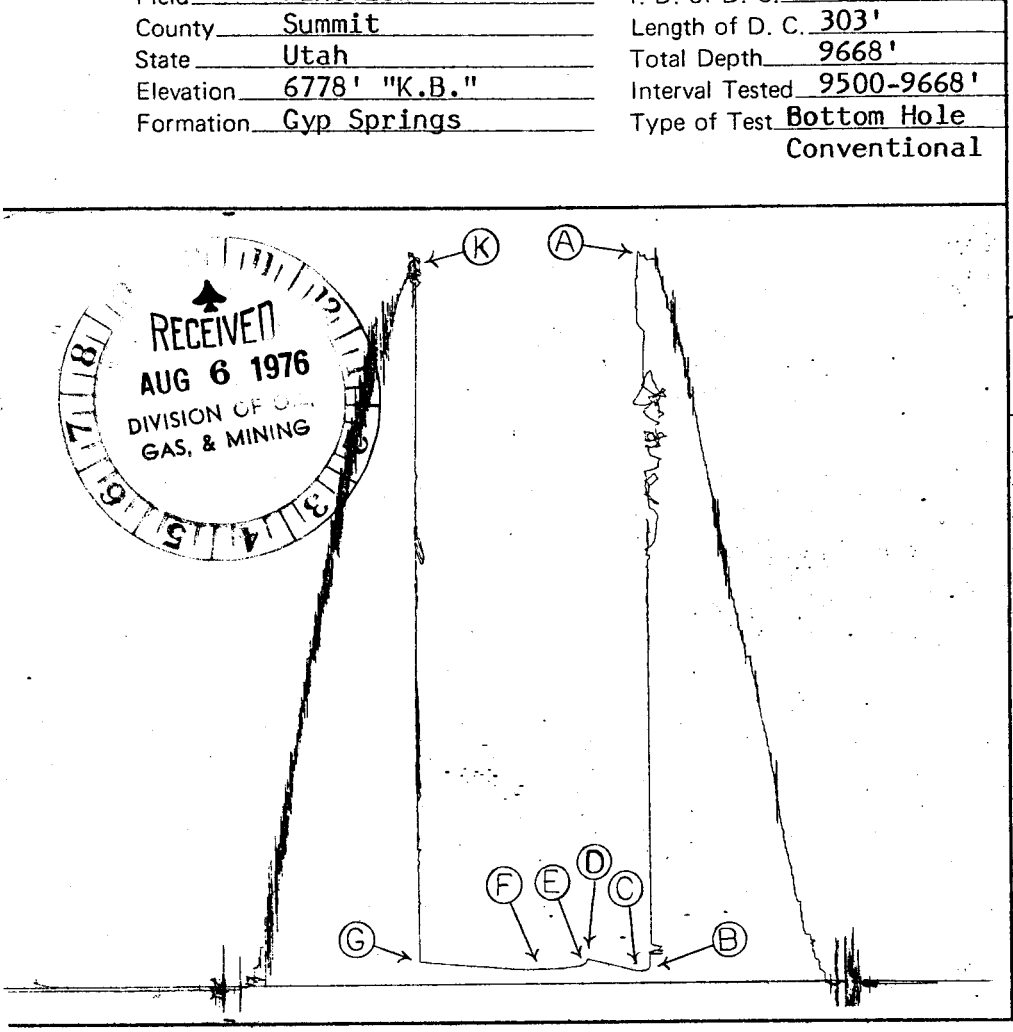

RECEIVED
AUG 6 1976
DIVISION OF OIL
GAS, & MINING

Inside Recorder

PRD Make Kuster AK-1
No. 2559 Cap. 5400 @ 9505'

Press		Corrected
Initial Hydrostatic	A	5128
Final Hydrostatic	K	5047
Initial Flow	B	116
Final Initial Flow	C	105
Initial Shut-in	D	188
Second Initial Flow	E	151
Second Final Flow	F	120
Second Shut-in	G	178
Third Initial Flow	H	---
Third Final Flow	I	--
Third Shut-in	J	--
Pressure Below Bottom Packer Bled To		

Our Tester: Perry Eker

Witnessed By: W.M. Sims

Did Well Flow – Gas No Oil No Water No

RECOVERY IN PIPE: 190' Slightly gas cut drilling mud = 1.15 Bbl.

1st Flow - Tool opened with very weak ½" underwater blow, increased to 1½" underwater blow at end of flow period.

2nd Flow - Tool opened with very weak surface bubbles, increased to 5" underwater blow at end of flow period.

REMARKS: Breakdown of shut-in pressures not practical for Horner Extrapolations.

Operator American Quasar Petroleum Co. | Address See Distribution | Well Name and No. Bingham #10-1 | Ticket No. 3729 | Date 7-31-76 | No. Final Copies 17 | DST No. 7

LYNES UNITED SERVICES
DIVISION OF LYNES, INC.

Operator American Quasar Petroleum Co. Lease & No. Bingham #10-1 DST No. 7

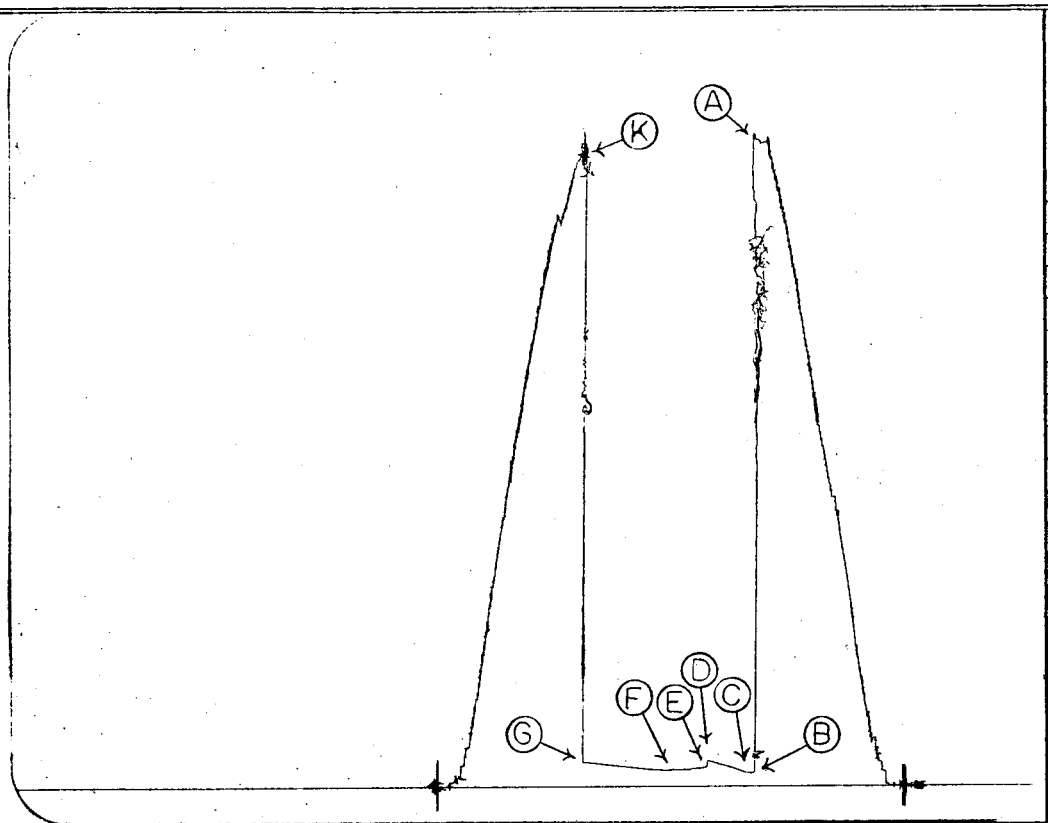

Inside Recorder

PRD Make Kuster AK-1

No. 5563 Cap. 6100 @ 9510'

Press		Corrected
Initial Hydrostatic	A	5130
Final Hydrostatic	K	5036
Initial Flow	B	105
Final Initial Flow	C	108
Initial Shut-in	D	193
Second Initial Flow	E	151
Second Final Flow	F	126
Second Shut-in	G	182
Third Initial Flow	H	--
Third Final Flow	I	--
Third Shut-in	J	--
Pressure Below Bottom Packer Bled To		

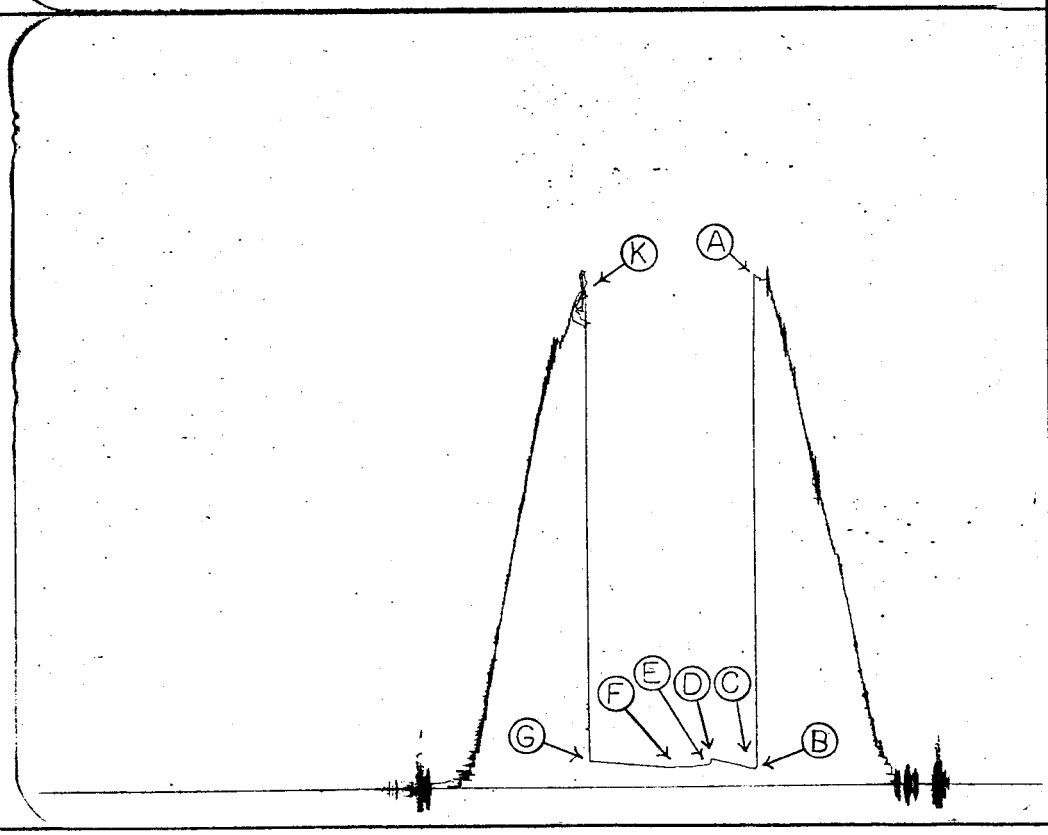

Inside Recorder

PRD Make Kuster AK-1

No. 973 Cap. 7900 @ 9666'

Press		Corrected
Initial Hydrostatic	A	5172
Final Hydrostatic	K	5068
Initial Flow	B	152
Final Initial Flow	C	158
Initial Shut-in	D	252
Second Initial Flow	E	203
Second Final Flow	F	173
Second Shut-in	G	240
Third Initial Flow	H	--
Third Final Flow	I	--
Third Shut-in	J	--
Pressure Below Bottom Packer Bled To		

LYNES UNITED SERVICES
DIVISION OF LYNES, INC.

Fluid Sample Report

Date 7-31-76 Ticket No., 3729

Company American Quasar Petroleum Co.

Well Name & No. Bingham #10-1 DST No. 7

County Summit State Utah

Sampler No. 10 Test Interval 9500-9668'

Pressure in Sampler 60 PSIG BHT 173 °F

Total Volume of Sampler: 2100 cc.

Total Volume of Sample: 1800 cc.

Oil: None cc.

Water: None cc.

Mud: 1800 Slightly gas cut cc.

Gas: 0.2 cu. ft.

Other: None

Resistivity

Water: @ of Chloride Content ppm.

Mud Pit Sample 0.06 @ 60°F of Chloride Content 175,000 ppm.

Gas/Oil Ratio Gravity °API @ °F

Where was sample drained On location

Remarks: Rig Water - R.W. 0.22 @ 72°F = 30,000 ppm. chl.

LYNES UNITED SERVICES
DIVISION OF LYNES, INC.

DISTRIBUTION OF FINAL DST REPORTS

Operator American Quasar Petroleum Co. Lease Bingham Well No. 10-1

Original: American Quasar Petroleum Co., Attn: Clare Gregg, 1630 Denver Club Bldg., Denver, Colorado 80202.

1 Copy: American Quasar Petroleum Co., Attn: Bud Hurley, 332 Pacific Western Life Bldg., Casper, Wyoming 82601.

1 Copy: American Quasar Petroleum Co., Attn: W.M. Bogert, 2500 Ft. Worth National Bank Bldg., Fort Worth, Texas 76102.

1 Copy: American Quasar Petroleum Co., Attn: Herb Ware, 1000 Midland National Bank Tower, Midland, Texas 79701.

2 Copies: Amoco Production Co., Attn: Division Engineering Mgr., Security Life Bldg., Denver, Colorado 80202.

1 Copy; Amoco Production Co., Attn: E.C. Woodall, Box 1400, Riverton, Wyoming 82501.

2 Copies: Sun Oil Co., Attn: J.M. Delong, 300 Writhers Center IV Bldg., Denver, Colorado 80202.

1 Copy: Occidental Petroleum Co., Attn: D.W. Chenot, 5000 Stockdale Hiway, Bakersfield, California 93306.

1 Copy: Energetics, Inc., Attn: Patrick Maher, 333 West Hampden Ave., Englewood, Colorado 80110.

1 Copy: North Central Oil Co., Attn: Howard Lester, Box 27491 Houston, Texas 77027.

1 Copy: Cawley, Gillespie & Assoc., Inc. Attn: Walt Evans, 302 Ft. Worth Club Bldg., Fort Worth, Texas 76102.

1 Copy: V.B. Gras, 777 Ninth Ave., Salt Lake City, Utah 84103.

1 Copy: U.S.G.S., 8426 Federal Bldg., Salt Lake City, Utah 84111.

2 Copies: Utah Division of Oil Gas & Mining, 1588 West, North Temple, Salt Lake City, Utah 84116.

(14)
Form DOGC-4

STATE OF UTAH
DEPARTMENT OF NATURAL RESOURCES
DIVISION OF OIL & GAS CONSERVATION
1588 WEST NORTH TEMPLE
SALT LAKE CITY, UTAH 84116
328-5771

State Lease No. ____
Federal Lease No. ____
Indian Lease No. ____
Fee & Pat. X

REPORT OF OPERATIONS AND WELL STATUS REPORT

STATE Utah COUNTY Summit FIELD/LEASE Pineview

The following is a correct report of operations and production (including drilling and producing wells) for the month of: ____, 19____.

Agent's Address 330 Pacific Western Life Bldg. Casper, Wyoming 82601
Phone No. (307) 265-3362

Company American Quasar Petroleum Co.
Signed A. H. Hurley, Jr.
Title Division Operations Manager

Sec. and ¼ of ¼	Twp.	Range	Well No.	Days Produced	Barrels of Oil	Gravity	Cu. Ft. of Gas (In thousands)	Gallons of Gasoline Recovered	Barrels of Water (if none, so state)	REMARKS (If drilling, depth; if shut down, cause date and result of test for gasoline content of gas)
SEC. 10 NW NE BINGHAM	2N	7E	10-1							Drilled 9,668' to 9,712'. Cut Core No. 1 from 9,712' - 9,747'. Drilled from 9,747' to 10,380' TD. Ran Schlumberger BHC Sonic GR, DIL; CNL-FDC Logs and Dipmeter and Directional Surveys. Set 250 jts. (10,423.81') of 7" 23# & 26# casing at 10,380' and cemented with 2,631 sax cement. Rig released at 12:00 MN 8-18-76. Now moving in and rigging up Well Servicin Inc.

GAS: (MCF)
Sold None
Flared/Vented None
Used On/Off Lease None

OIL or CONDENSATE: (To be reported in Barrels)
On hand at beginning of month None
Produced during month None
Sold during month None
Unavoidably lost None
Reason:
On hand at end of month None

DRILLING/PRODUCING WELLS: This report must be filed on or before the sixteenth day of the succeeding month following production for each well. Where a well is temporarily shut-in, a negative report must be filed. *THIS REPORT MUST BE FILED IN DUPLICATE.*

CORE LABORATORIES, INC. *Petroleum Reservoir Engineering*

COMPANY	AMERICAN QUASAR PETROLEUM CO.	FIELD	PINEVIEW	FILE	RP-4-3741
WELL	BINGHAM 10-1	COUNTY	SUMMIT	DATE	8-5-76
LOCATION	NW NE SEC 10-2N-7E	STATE	UTAH	ELEV.	6761 GR

CORE-GAMMA CORRELATION

These analyses, opinions or interpretations are based on observations and material supplied by the client to whom, and for whose exclusive and confidential use, this report is made. The interpretations or opinions expressed represent the best judgment of Core Laboratories, Inc. (all errors and omissions excepted); but Core Laboratories, Inc. and its officers and employees, assume no responsibility and make no warranty or representations as to the productivity, proper operation, or profitableness of any oil, gas or other mineral well or sand in connection with which such report is used or relied upon.

VERTICAL SCALE: 5" = 100'

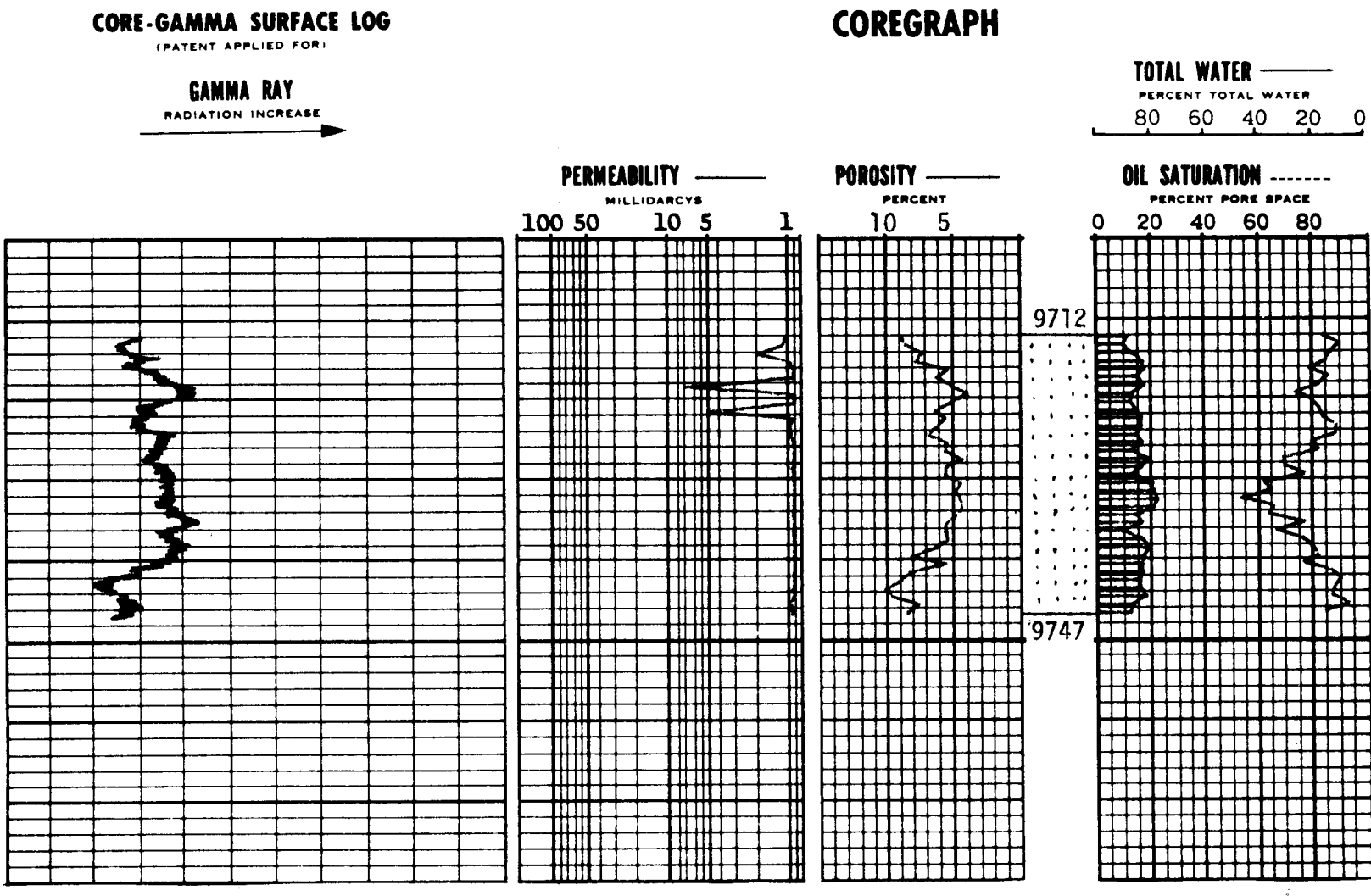

CORE SUMMARY AND CALCULATED RECOVERABLE OIL

FORMATION NAME AND DEPTH INTERVAL: **Nugget - 9712.0-9747.0 Feet**

FEET OF CORE RECOVERED FROM ABOVE INTERVAL	35	AVERAGE TOTAL WATER SATURATION: PER CENT OF PORE SPACE	21.9
FEET OF CORE INCLUDED IN AVERAGES*	35	AVERAGE CONNATE WATER SATURATION: PER CENT OF PORE SPACE	15 (e)
AVERAGE PERMEABILITY: MILLIDARCYS	0.56	OIL GRAVITY: °API	40+ (e)
PRODUCTVE CAPACITY: MILLIDARCY-FEET	19.6	ORIGINAL SOLUTION GAS-OIL RATIO: CUBIC FEET PER BARREL	
AVERAGE POROSITY: PER CENT	6.5	ORIGINAL FORMATION VOLUME FACTOR: BARRELS SATURATED OIL PER BARREL STOCK-TANK OIL	1.80 (e)
AVERAGE RESIDUAL OIL SATURATION: PER CENT OF PORE SPACE	15.0	CALCULATED ORIGINAL STOCK-TANK OIL IN PLACE: BARRELS PER ACRE-FOOT	238

Calculated maximum solution gas drive recovery is barrels per acre-foot, assuming production could be continued until reservoir pressure declined to zero psig. Calculated maximum water drive recovery is barrels per acre-foot, assuming full maintenance of original reservoir pressure, 100% areal and vertical coverage, and continuation of production to 100% water cut. *(Please refer to footnotes for further discussion of recovery estimates.)*

(c) Calculated (e) Estimated (m) Measured (*) Refer to attached letter.

INTERPRETATION OF DATA

9712.0-9747.0 Feet - Oil productive after successful **artificial stimulation. Believe upper section (9712.0-9725.0 feet) is best zone for completion due to natural fracturing.**

These recovery estimates represent theoretical maximum values for solution gas and water drive. They assume that production is started at original reservoir pressure; i.e., no account is taken of production to date or of prior drainage to other areas. The effects of factors tending to reduce actual ultimate recovery, such as economic limits on oil production rates, gas-oil ratios, or water-oil ratios, have not been taken into account. Neither have factors been considered which may result in actual recovery intermediate between solution gas and complete water drive recoveries, such as gas cap expansion, gravity drainage, or partial water drive. Detailed predictions of ultimate oil recovery to specific abandonment conditions may be made in an engineering study in which consideration is given to overall reservoir characteristics and economic factors.

These analyses, opinions or interpretations are based on observations and materials supplied by the client to whom, and for whose exclusive and confidential use, this report is made. The interpretations or opinions expressed represent the best judgment of Core Laboratories, Inc. (all errors and omissions excepted); but Core Laboratories, Inc., and its officers and employees assume no responsibility and make no warranty or representation as to the productivity, proper operation, or profitableness of any oil, gas or other mineral well or sand in connection with which such report is used or relied upon.

FORM OGC-8-X
FILE IN QUADRUPLICATE

K

RECEIVED
AUG 24 1976
DIVISION OF
GAS, & MINING

STATE OF UTAH
DEPARTMENT OF NATURAL RESOURCES
DIVISION OF OIL, GAS, AND MINING
1588 West North Temple
Salt Lake City, Utah 84116

REPORT OF WATER ENCOUNTERED DURING DRILLING

Well Name and Number Bingham 10-1

Operator American Quasar Petroleum Co.

Address 330 Pacific Western Life Bldg., Casper, Wyo.

Contractor Parker Drlg. Co.

Address Vernal, Utah

Location NW 1/4, NE 1/4, Sec. 10; T. 2 N; R. 7 E; Summit County

Water Sands:

	Depth: From-	To-	Volume: Flow Rate or Head-	Quality: Fresh or Salt-
1.	None			
2.				
3.				
4.				
5.				

(continue on reverse side if necessary)

Formation Tops:

Kelvin	2220	Twin Creek	8386
Stump	6065	Gypsum Springs	9624
Preuss	6460	Nugget	9688
Top Salt	7596		
Base Salt	8290		

NOTE: (a) Upon diminishing supply of forms, please inform this office.
(b) Report on this form as provided for in Rule C-20, General Rules And Regulations and Rules of Practice and Procedure.
(c) If a water quality analysis has been made of the above reported zone, please forward a copy along with this form

BBHras

(10)

Form DOGC-4

STATE OF UTAH

DEPARTMENT OF NATURAL RESOURCES

DIVISION OF OIL & GAS CONSERVATION

1588 WEST NORTH TEMPLE
SALT LAKE CITY, UTAH 84116
328-5771

State Lease No. _____
Federal Lease No. _____
Indian Lease No. _____
Fee & Pat. X

RECEIVED
AUG 30 1976
DIVISION OF OIL, GAS, & MINING

REPORT OF OPERATIONS AND WELL STATUS REPORT

STATE Utah COUNTY Summit FIELD/LEASE Pineview

The following is a correct report of operations and production (including drilling and producing wells) for the month of: July, 1976.

Agent's Address 330 Pacific Western Life Bldg.
Casper, Wyoming 82601

Phone No. (307) 265-3362

Company American Quasar Petroleum Co.

Signed A. H. Hurley, Jr.

Title Division Operations Manager

Sec. and ¼ of ¼	Twp.	Range	Well No.	Days Produced	Barrels of Oil	Gravity	Cu. Ft. of Gas (In thousands)	Gallons of Gasoline Recovered	Barrels of Water (if none, so state)	REMARKS (If drilling, depth; if shut down, caus date and result of test for gasoline content of gas)
SEC. 10 NW NE BINGHAM	2N	7E	10-1							Drilled 7,026' - 7,776'. Ran DST No. 1 - 7,698' - 7,776'. Drilled to 8,490'. Ran DST No. 2 - 8,350' - 8,490'. Drilled to 8,700'. Ran DST No. 3 - 8,488 - 8,700'. Drilled to 8,950'. Ran DST No. 4 - 8,800' - 8,950'. Drilled to 9,234'. Ran DST No. 5 9,100' - 9,234'. Drilled to 9,500'. Ran DST No. 6 - 9,275' - 9,500'. Drilled to 9,668'. Ran DST No. 7 - 9,500' - 9,668'. Now pulling out of hole with test tool - Incomplete.

GAS: (MCF)
Sold None
Flared/Vented None
Used On/Off Lease None

OIL or CONDENSATE: (To be reported in Barrels)
On hand at beginning of month None
Produced during month None
Sold during month None
Unavoidably lost None
Reason:
On hand at end of month None

DRILLING/PRODUCING WELLS: This report must be filed on or before the sixteenth day of the succeeding month following production for each well. Where a well is temporarily shut-in, a negative report must be filed. *THIS REPORT MUST BE FILED IN DUPLICATE.*

RECEIVED
SEP 9 1976
DIVISION OF OIL,
GAS, & MINING

CORE ANALYSIS RESULTS

AMERICAN QUASAR PETROLEUM COMPANY

BINGHAM 10-1

PINEVIEW FIELD

SUMMIT COUNTY, UTAH

CORE LABORATORIES, INC.
Petroleum Reservoir Engineering
DALLAS, TEXAS

AMERICAN QUASAR PET. CO.
BINGHAM 10-1
PINEVIEW FIELD
SUMMIT COUNTY

FORMATION : NUGGET
DRLG. FLUID: WATER BASE MUD
LOCATION : NW NE SEC 10 T2N R7E
STATE : UTAH

DATE : 8-5-76
FILE NO. : RP-4-3741-11
ANALYSTS : BOWEN
ELEVATION: 6761 GR

WHOLE CORE ANALYSIS

SAMP. NO.	DEPTH	PERM. TO AIR (MD) MAX.	90 DEG.	POR. FLD.	FLUID SATS. OIL	WATER	GR. DNS.	DESCRIPTION	
1	9712-13	1.0	*	9.0	10.6	16.9		SD, TN F-MG	VF
2	9713-14	1.1	*	8.7	8.9	11.1		SD, TN F-MG LAM	VF
3	9714-15	1.8	*	7.5	11.8	14.4		SD, TN FG	
4	9715-16	0.44	0.38	7.9	16.0	16.0		SD, TN F-MG LAM	
5	9716-17	0.04	0.02	5.6	16.7	22.3		SD, TN F-MG	
6	9717-18	0.12	0.09	6.4	13.9	15.5		SD, TN F-MG LAM	
7	9718-19	7.4	0.06	5.4	16.6	18.5		SD, TN F-MG LAM	VF
8	9719-20	0.06	0.04	4.1	12.4	27.2		SD, TN F-MG LAM	
9	9720-21	0.07	0.07	5.3	11.4	20.8		SD, TN F-MG LAM	
10	9721-22	4.7	1.2	6.5	13.8	18.4		SD, TN F-MG	HF
11	9722-23	0.18	0.07	5.8	15.5	17.2		SD, TN F-MG	
12	9723-24	0.47	0.41	6.4	15.4	12.3		SD, TN F-MG LAM	VF
13	9724-25	0.24	0.17	7.0	13.9	12.5		SD, TN F-MG LAM	VF
14	9725-26	0.01	*	5.7	15.9	21.1		SD, TN F-MG	
15	9726-27	0.09	0.09	5.7	12.0	18.9		SD, TN FG	
16	9727-28	0.04	0.04	4.5	18.0	31.5		SD, TN FG	
17	9728-29	0.19	0.03	5.7	15.7	31.4		SD, TN FG	
18	9729-30	0.04	0.02	5.8	12.0	24.0		SD, TN FG	
19	9730-31	0.02	*	4.6	19.4	38.7		SD, TN FG	
20	9731-32	0.03	*	5.0	20.1	36.1		SD, TN FG	
21	9732-33	0.02	0.02	4.6	21.5	47.4		SD, TN FG	
22	9733-34	0.11	0.06	4.5	20.0	35.5		SD, TN FG	
23	9734-35	0.03	*	4.9	14.3	36.9		SD, TN FG	
24	9735-36	0.07	0.05	5.7	15.6	24.2		SD, TN FG	
25	9736-37	0.03	0.03	5.7	9.0	34.0		SD, TN FG	

* SAMPLE NOT SUITABLE FOR WHOLE CORE ANALYSIS

These analyses, opinions or interpretations are based on observations and materials supplied by the client to whom, and for whose exclusive and confidential use, this report is made. The interpretations or opinions expressed represent the best judgment of Core Laboratories, Inc. (all errors and omissions excepted); but Core Laboratories, Inc. and its officers and employees, assume no responsibility and make no warranty or representations, as to the productivity, proper operations, or profitableness of any oil, gas or other mineral well or sand in connection with which such report is used or relied upon.

CORE LABORATORIES, INC.
Petroleum Reservoir Engineering
DALLAS, TEXAS

AMERICAN QUASAR PET. CO.
BINGHAM 10-1
PINEVIEW FIELD
SUMMIT COUNTY

FORMATION : NUGGET
DRLG. FLUID: WATER BASE MUD
LOCATION : NW NE SEC 10 T2N R7E
STATE : UTAH

DATE : 8-5-76
FILE NO. : RP-4-3741-11
ANALYSTS : BOWEN
ELEVATION: 6761 GR

WHOLE CORE ANALYSIS

SAMP. NO.	DEPTH	PERM. TO AIR (MD) MAX.	90 DEG.	POR. FLD.	FLUID SATS. OIL	WATER	GR. DNS.	DESCRIPTION
26	9737-38	0.02	*	5.6	15.9	24.7		SD, TN FG LAM
27	9738-39	0.07	0.02	6.4	18.3	21.4		SD, TN FG
28	9739-40	0.02	0.02	8.3	16.5	18.8		SD, TN FG
29	9740-41	0.04	0.03	5.8	15.6	24.3		SD, TN FG
30	9741-42	0.11	0.04	8.4	16.1	13.8		SD, TN FG
31	9742-43	0.09	0.09	9.1	14.9	10.7		SD, TN F-MG LAM
32	9743-44	0.19	0.13	10.2	15.0	13.2		SD, TN F-MG LAM
33	9744-45	0.20	0.07	9.7	17.1	14.1		SD, TN F-MG LAM
34	9745-46	0.44	*	7.8	12.5	7.5		SD, TN F-MG LAM
35	9746-47	0.15	*	8.6	11.4	16.0		SD, TN F-MG LAM

* SAMPLE NOT SUITABLE FOR WHOLE CORE ANALYSIS

These analyses, opinions or interpretations are based on observations and materials supplied by the client to whom, and for whose exclusive and confidential use, this report is made. The interpretations or opinions expressed represent the best judgment of Core Laboratories, Inc. (all errors and omissions excepted); but Core Laboratories, Inc. and its officers and employees, assume no responsibility and make no warranty or representations as to the productivity, proper operations, or profitableness of any oil, gas or other mineral well or sand in connection with which such report is used or relied upon.

Rev. 4-72

VOLUMETRIC METER PROVING REPORT
MECHANICAL DISPLACEMENT METHOD

DATE OF TEST: Mar 7 - 77	BARRELS ☑ GALLONS ☐	GAUGERS DIST. NO.: 600	REPORT NO.: 8		
☑ACT - LEASE NAME OR ☐ACT - NAME: American Quasar Bingham 10-1	LEASE NO.: 420062	RECEIPT ☑ DELIVERY ☐	WEATHER CONDITIONS: Cl Calm	DESCRIPTION	ATM. TEMP.: 40 °F

METER	MAKE AND MODEL: Smith E3-S1	SIZE: 3"	TEMP. COMPENSATED: ☑ YES ☐ NO	ATG ☑ ATC ☐	GROUP OR GRAVITY	PULSES/BBL.: 8400	METER CASE PRESSURE: 42 PSI	SERIAL NO.: 43165
PROVER	SERIAL NO.: S-22678	SIZE: 16"	ROUND TRIP VOLUME @ 60° F. AND 0 PSI: 1.91892	OPERATING PSI: SERIES I 40	SERIES II 40	SERIES III		
LIQUID	TYPE: Crude	OBSERVED GTY. AND TEMP.: 48.1 61 °F	GRAVITY - API: 48.1° @ 60° F.	SPECIFIC GRAVITY @ 60° F.	TIME OF RUN: 30/30 SEC.	RATE OF FLOW: 114 B/H	

RUN NO.	ELECTRONIC COUNTER LEFT/RIGHT	ROUND TRIP	PROVER °F	METER °F
1	7938	15856	79	79
2	7938	15855		
3	7935	15861	79	79
4	7931	15850		
5	7933	15855	79	79
SERIES I AVERAGES		158554	79	79
1	7933	15856	79	79
2	7937	15853		
3	7936	15850	79	79
4	7932	15848		
5	7932	15855	79	79
SERIES II AVERAGES		158524	79	79
1				
2				
3				
4				
5				
SERIES III AVERAGES				

● CALCULATIONS ●

PROVER VOLUME*	× CTS	× CTL	= NET PROVER VOLUME			
1.91897	.9904		1.90055			
AVERAGE PULSES PER ROUND TRIP	÷ PULSES PER BARREL	= GROSS METER VOLUME				
SERIES I 15855.4	8400	1.88755				
GROSS METER VOLUME	× CTL	= METER VOLUME				
NET PROVER VOLUME	÷ METER VOLUME	= METER FACTOR				
1.90055	1.88755	1.00689				
PROVER VOLUME*	× CTS	× CTL	= NET PROVER VOLUME			
1.91897	.9904		1.90055			
AVERAGE PULSES PER ROUND TRIP	÷ PULSES PER BARREL	= GROSS METER VOLUME				
SERIES II 158524	8400	1.88719				
GROSS METER VOLUME	× CTL	= METER VOLUME				
NET PROVER VOLUME	÷ METER VOLUME	= METER FACTOR				
1.90055	1.88719	1.00708				
PROVER VOLUME*	× CTS	× CTL	= NET PROVER VOLUME			
AVERAGE PULSES PER ROUND TRIP	÷ PULSES PER BARREL	= GROSS METER VOLUME				
SERIES III						
GROSS METER VOLUME	× CTL	= METER VOLUME				
NET PROVER VOLUME	÷ METER VOLUME	= METER FACTOR				

TOTALIZER ●	READING (START OF TEST)	LIQUID METERED SINCE LAST PROVING	NEW METER FACTOR (SERIES AVG.)
	614050	37949	1.00699

REMARKS, REPAIRS, AND ADJUSTMENTS (SHOW DATES)

EFFECTIVE DATE OF NET METER FACTOR	NET METER FACTOR
8A Mar 1-77	1.007D

DATE OF LAST COMPENSATOR CHECK: 9-15-76

*ROUND TRIP VOLUME AT PROVER CONDITIONS

PREVIOUS FACTORS SINCE LAST REPAIR												
DATE						8	9	10	11	12	1	2
FACTOR						10069	10076	10072	10074	10084	10086	1.0099
TEMP.						74	74.5	78.5	69.5	70.5	75	80

CALIBRATOR ADJUSTMENT: ☑ NO ☐ YES - SHOW AMOUNT ..... ☐ MINUS ☐ PLUS

TESTED BY: C. L. Ford

CALCULATIONS VERIFIED BY:

WITNESSES	SIGNATURE	DATE	PERSON OR COMPANY REPRESENTED
	Don Wright	3-7-77	Quasar Pet Co.

RECEIVED
MAR 14 1977
DIVISION OF OIL, GAS, & MINING

Form O-3

SUBMIT IN DUPLICATE*
(See other instructions on reverse side)

STATE OF UTAH
DEPARTMENT OF NATURAL RESOURCES
DIVISION OF OIL, GAS, AND MINING

WELL COMPLETION OR RECOMPLETION REPORT AND LOG*

1a. TYPE OF WELL: OIL WELL [X] GAS WELL [ ] DRY [ ] Other

b. TYPE OF COMPLETION: NEW WELL [X] WORK OVER [ ] DEEP-EN [ ] PLUG BACK [ ] DIFF. RESVR. [ ] Other

2. NAME OF OPERATOR: American Quasar Petroleum Company of New Mexico

3. ADDRESS OF OPERATOR: 1700 Broadway, Denver, Colorado 80290

4. LOCATION OF WELL (Report location clearly and in accordance with any State requirements)*
At surface 682' FNL & 3279' FWL (NW NE)
At top prod. interval reported below
At total depth Same

RECEIVED NOV 23 1976 DIVISION OF OIL, GAS & MINING

5. LEASE DESIGNATION AND SERIAL NO.: Fee

6. IF INDIAN, ALLOTTEE OR TRIBE NAME:

7. UNIT AGREEMENT NAME:

8. FARM OR LEASE NAME: Bingham

9. WELL NO.: 10-1

10. FIELD AND POOL, OR WILDCAT: Pineview Field

11. SEC., T., R., M., OR BLOCK AND SURVEY OR AREA: Sec 10 - 2N - 7E

14. PERMIT NO.: | DATE ISSUED:

12. COUNTY OR PARISH: Summit | 13. STATE: Utah

15. DATE SPUDDED	16. DATE T.D. REACHED	17. DATE COMPL. (Ready to prod.)	18. ELEVATIONS (DF, RKB, RT, GR, ETC.)*	19. ELEV. CASINGHEAD
6-5-76	8-11-76	11-7-76	6761 GR 6778 KB	

20. TOTAL DEPTH, MD & TVD	21. PLUG, BACK T.D., MD & TVD	22. IF MULTIPLE COMPL., HOW MANY*	23. INTERVALS DRILLED BY	ROTARY TOOLS	CABLE TOOLS
10380'		2	→	0 - TD	

24. PRODUCING INTERVAL(S), OF THIS COMPLETION—TOP, BOTTOM, NAME (MD AND TVD)*
Nugget 9953 - 9926
Twin Creek 9100 - 9220 9300 - 9474

25. WAS DIRECTIONAL SURVEY MADE: Yes

26. TYPE ELECTRIC AND OTHER LOGS RUN: See Attached

27. WAS WELL CORED: Yes

28. CASING RECORD (Report all strings set in well)

CASING SIZE	WEIGHT, LB./FT.	DEPTH SET (MD)	HOLE SIZE	CEMENTING RECORD	AMOUNT PULLED
13 3/8	61#	60	17¼	250 sx	-
9 5/8	36#	2500	12¼	1100 sx	-
7	23 & 26#	10380	8 3/8	2631 sx	-

29. LINER RECORD

SIZE	TOP (MD)	BOTTOM (MD)	SACKS CEMENT*	SCREEN (MD)

30. TUBING RECORD

SIZE	DEPTH SET (MD)	PACKER SET (MD)
2 3/8	9705	9705

31. PERFORATION RECORD (Interval, size and number)
See Attached

32. ACID, SHOT, FRACTURE, CEMENT SQUEEZE, ETC.

DEPTH INTERVAL (MD)	AMOUNT AND KIND OF MATERIAL USED
See Attached	

33.* PRODUCTION

DATE FIRST PRODUCTION	PRODUCTION METHOD (Flowing, gas lift, pumping—size and type of pump)	WELL STATUS (Producing or shut-in)
9-5-76	Flwg.	Producing

DATE OF TEST	HOURS TESTED	CHOKE SIZE	PROD'N. FOR TEST PERIOD	OIL—BBL.	GAS—MCF.	WATER—BBL.	GAS-OIL RATIO
10-7-76	3	18/64	→	Nugget 105 Twn Crk 105	97 MCF 96 MCF	None	920 919

FLOW. TUBING PRESS.	CASING PRESSURE	CALCULATED 24-HOUR RATE	OIL—BBL.	GAS—MCF.	WATER—BBL.	OIL GRAVITY-API (CORR.)
1125		→	840 840	773 772	None	46.6

34. DISPOSITION OF GAS (Sold, used for fuel, vented, etc.): Mountain Fuel Supply

TEST WITNESSED BY:

35. LIST OF ATTACHMENTS

36. I hereby certify that the foregoing and attached information is complete and correct as determined from all available records

SIGNED [signature] TITLE Operations Manager DATE 11-19-76

*(See Instructions and Spaces for Additional Data on Reverse Side)

INSTRUCTIONS

General: This form is designed for submitting a complete and correct well completion report and log on all types of lands and leases to either a Federal agency or a State agency, or both, pursuant to applicable Federal and/or State laws and regulations. Any necessary special instructions concerning the use of this form and the number of copies to be submitted, particularly with regard to local, area, or regional procedures and practices, either are shown below or will be issued by, or may be obtained from, the local Federal and/or State office. See instructions on items 22 and 24, and 33, below regarding separate reports for separate completions.

If not filed prior to the time this summary record is submitted, copies of all currently available logs (drillers, geologists, sample and core analysis, all types electric, etc.), formation and pressure tests, and directional surveys, should be attached hereto, to the extent required by applicable Federal and/or State laws and regulations. All attachments should be listed on this form, see item 35.

Item 4: If there are no applicable State requirements, locations on Federal or Indian land should be described in accordance with Federal requirements. Consult local State or Federal office for specific instructions.

Item 18: Indicate which elevation is used as reference (where not otherwise shown) for depth measurements given in other spaces on this form and in any attachments.

Items 22 and 24: If this well is completed for separate production from more than one interval zone (multiple completion), so state in item 22, and in item 24 show the producing interval, or intervals, top(s), bottom(s) and name(s) (if any) for only the interval reported in item 33. Submit a separate report (page) on this form, adequately identified, for each additional interval to be separately produced, showing the additional data pertinent to such interval.

Item 29: *"Sacks Cement":* Attached supplemental records for this well should show the details of any multiple stage cementing and the location of the cementing tool.

Item 33: Submit a separate completion report on this form for each interval to be separately produced. (See instruction for items 22 and 24 above.)

37. SUMMARY OF POROUS ZONES:
SHOW ALL IMPORTANT ZONES OF POROSITY AND CONTENTS THEREOF; CORED INTERVALS; AND ALL DRILL-STEM TESTS, INCLUDING DEPTH INTERVAL TESTED, CUSHION USED, TIME TOOL OPEN, FLOWING AND SHUT-IN PRESSURES, AND RECOVERIES

FORMATION	TOP	BOTTOM	DESCRIPTION, CONTENTS, ETC.
Nugget	9712	9747	Rec. 35' Nugget ss, hd, and light @ top to some porosity and oil sat. @ bottom
DST's -- See	Attached		

38. GEOLOGIC MARKERS

NAME	TOP MEAS. DEPTH	TOP TRUE VERT. DEPTH
Stump	6040	
Pruess	6560	
Salt	7598	
Base Salt	8315	
Twin Creek		
Graffe Creek	8400	
Leads Creek	8755	
Walton Canyon	9030	
Boundary Ridge	9250	
Rich	9295	
Sliderock	9530	
Gypsum Springs	9625	
Nugget	9690	

ATTACHMENT

26. DLL 2494 - 10364
BHC - GRS 2414 - 10364
FDC - CNL - GR 8200 - 10374
PML 2805 - 10375
HDT 2500 - 10375

31. 9926 - 36, 9880 - 86, 9862 - 68, 9842 - 48, 9814 - 22, 9790 - 98, 9775 - 85, 9753 - 58 w/ 2 JSPF

9100 - 05, 9115 - 28, 9145 - 60, 9200 - 20 w/ 2 JSPF

9300 - 9306, 9370 - 9380, 9418 - 9438, 9460 - 9474 w/ 2 SPM

32. Acid-frac'd Twin Creek pfs - 9100 - 9220'

3000 gals. WF 60 pad + 3000 gals. WF 60 w/ 2#/gal. 100 - mesh sd + 3000 gals. Super X emulsion w/ 28% HCl acid + 600 gals. WF20 w/ 3000 # OS160 unibuttons + 300# J227 Benzoic Acid Flakes. Above repeated 2 more times and flushed w/ 60 bbls. 2% KCl water.

Oil-sqzd. Twin Creek pfs w/ 320 bbls. lse crude w/ 0.6% Fre-Fl C & 0.05% U66 solvent in 3 - 100 bbs. stages separated by Unibeads

Acid frac. Rich pfs 9300 - 9474'
pump 142 B, WF - 80 pad + 142 B. WF - 60 w/ 2#/gal. 100# mesh sd + 72 B. Super - X acid + 72 B. 28% HCl + 14 B. WF - 20 w/ 35 7/8" ball sealers.

Frac. Twin Creek pfs 9100 - 9220 and 9300 - 9474
pmpd. 121 bbls. 2% KCl wtr w/ 2500# Benzoic Acid flush, followed by 143 bbls. WF 60 pad, then 143 bbls. WF60 w/ 2#/Gal. 100-mesh sd, then 71 bbls. Super - X acid, then 71 bbls. 28% HCl, then 14 bbls. WF20 w/ 500# Benzoic Acid Flakes, then 143 bbls. WF 60 pad, then 143 bbls. WF60 w/ 2#/ gal. 100-mesh sd, then 71 bbls. Super - X acid, then 167 bbls. 28% HCl, flushed w/ 71 bbls. WF20

37. DST # 1 (Preuss) 7698 - 7776' w/ no WC, TO 10" w/ no blow, SI 60", TO 120" w/ no blow, SI 210", rec. 20' drlg. mud, no oil or gas IHP - 3196, IFP - 89/51, ISIP - 561, FFP - 63/63, FSIP - 2280, FHP - 3171

DST # 2 (Twin Creek) 8350 - 8490' w/ no WC , TO 10", had sli blow and died, SI 60", TO 60" w/ no blow, SI 120", rec. 15' drlg. mud w/ no show of oil or gas, IHP - 4180, IFP - 64/51, ISIP - 1487, FFP - 51/38, FSIP - 230, FHP - 4167

ATTACHMENT

DST # 3 (Twin Creek) 8488 - 8700' w/ no WC, TO 10" w/ fair, incr blow, SI 60", TO 60" w/ wk, incr blow, SI 120", rec. 800' hily G/C/M w/ tr oil, IHP - 4453, IFP - 344/332, ISIP - 3807, FFP - 370/376, FSIP - 3054, FHP - 4749.

DST # 4 (Twin Creek) 8800 - 8950' w/ no WC, TO 10" - very wk, decr. blow, SI 60", TO 60" - very faint blow thruout, SI 20", rec. 200' very slily G/C/M, IHP - 4705, IFP - 184/184, ISIP - 4149, FFP - 215/215, FSIP - 3148, FHP - 4679.

DST # 5 (Twin Creek) 9100 - 9234' w/ no WC, TO 10" w/ wk, incr blow, SI 60", TO 60" GTS 18" into 2nd opn, w/ fair blow remaining thru-out period, no oil to surf, 120" FSI, rec. 570' O & G/C/M, IHP - 4791, IFP - 280/293, ISIP - 2824, FFP - 216/255, FSIP - 3804, FHP - 4778.

DST # 6 (Twin Creek) 9275 - 9500' w/ no WC, TO 10" w/ wk, incr blow, SI 60", TO 63", G T S in 14" initial gas rate 93 MCFD, decr to 49 MCFD @ end of period, SI 120", rec. 422' G/C/M + 216' O & G/C/M, IHP - 4887, IFP - 324/365, ISP - 1121, FFP 311/284, FSIP 3320, FHP 4841.

DST # 7 (Gyp. Springs) 9500 - 9668' w/ no WC, TO 10", SI 60", TO 60", SI 120", had fair blow @ end of test, no G T S, rec. 190' slily G/C/M, IHP - 5103, IFP 95/68, ISIP - 162, FFP - 135/95, FSIP - 149, FHP - 4994

Form OGC-3

12

STATE OF UTAH
DEPARTMENT OF NATURAL RESOURCES
DIVISION OF OIL, GAS, AND MINING

SUBMIT IN DUPLICATE*
(See other instructions on reverse side)

WELL COMPLETION OR RECOMPLETION REPORT AND LOG*

1a. TYPE OF WELL: OIL WELL [X] GAS WELL [ ] DRY [ ] Other

b. TYPE OF COMPLETION: NEW WELL [X] WORK OVER [ ] DEEP-EN [ ] PLUG BACK [ ] DIFF. RESVR. [ ] Other

2. NAME OF OPERATOR: American Quasar Petroleum Company of New Mexico

3. ADDRESS OF OPERATOR: 707 United Bank Tower, Denver, CO 80290

4. LOCATION OF WELL (Report location clearly and in accordance with any State requirements*)
At surface 2008' FSL ~~3273' FNL~~ & 666' FWL (NW SW)
At top prod. interval reported below
At total depth: Same

RECEIVED NOV 23 1976 DIVISION OF OIL, GAS, & MINING

14. PERMIT NO. 43-043-30026 DATE ISSUED

5. LEASE DESIGNATION AND SERIAL NO.: Fee
6. IF INDIAN, ALLOTTEE OR TRIBE NAME
7. UNIT AGREEMENT NAME
8. FARM OR LEASE NAME: Bingham
9. WELL NO.: 2-1
10. FIELD AND POOL, OR WILDCAT: Pineview Field
11. SEC., T., R., M., OR BLOCK AND SURVEY OR AREA: Sec 2 - 2N - 7E
12. COUNTY OR PARISH: Summit
13. STATE: Utah

15. DATE SPUDDED	16. DATE T.D. REACHED	17. DATE COMPL. (Ready to prod.)	18. ELEVATIONS (DF, RKB, RT, GR, ETC.)*	19. ELEV. CASINGHEAD
6-30-76	9-2-76	11-7-76	6810 GR 6827 KB	

20. TOTAL DEPTH, MD & TVD	21. PLUG, BACK T.D., MD & TVD	22. IF MULTIPLE COMPL., HOW MANY*	23. INTERVALS DRILLED BY	ROTARY TOOLS	CABLE TOOLS
10327'	10295'		→	0 - TD	

24. PRODUCING INTERVAL(S), OF THIS COMPLETION—TOP, BOTTOM, NAME (MD AND TVD)*: Nugget 9620 - 9700

25. WAS DIRECTIONAL SURVEY MADE: Yes

26. TYPE ELECTRIC AND OTHER LOGS RUN: See Attached

27. WAS WELL CORED: Yes

28. CASING RECORD (Report all strings set in well)

CASING SIZE	WEIGHT, LB./FT.	DEPTH SET (MD)	HOLE SIZE	CEMENTING RECORD	AMOUNT PULLED
13 3/8"	48#	45	17½	Circ.	-
9 5/8"	36#	2007	12¼	885 sx	-
7"	23#	10324	8 3/4	1175 sx	-

29. LINER RECORD

SIZE	TOP (MD)	BOTTOM (MD)	SACKS CEMENT*	SCREEN (MD)

30. TUBING RECORD

SIZE	DEPTH SET (MD)	PACKER SET (MD)
2 7/8	9140	9140

31. PERFORATION RECORD (Interval, size and number): 9620 - 9700' 2 SPF

32. ACID, SHOT, FRACTURE, CEMENT SQUEEZE, ETC.

DEPTH INTERVAL (MD)	AMOUNT AND KIND OF MATERIAL USED
See Attached	

33.* PRODUCTION

DATE FIRST PRODUCTION	PRODUCTION METHOD (Flowing, gas lift, pumping—size and type of pump)	WELL STATUS (Producing or shut-in)
10-24-76	Flowing	Producing

DATE OF TEST	HOURS TESTED	CHOKE SIZE	PROD'N. FOR TEST PERIOD	OIL—BBL.	GAS—MCF.	WATER—BBL.	GAS-OIL RATIO
11-7-76	3	19/64	→	118	104	-	886

FLOW. TUBING PRESS.	CASING PRESSURE	CALCULATED 24-HOUR RATE	OIL—BBL.	GAS—MCF.	WATER—BBL.	OIL GRAVITY-API (CORR.)
1025		→	942	835	-	46.3

34. DISPOSITION OF GAS (Sold, used for fuel, vented, etc.): Mountain Fuel Supply

TEST WITNESSED BY

35. LIST OF ATTACHMENTS

36. I hereby certify that the foregoing and attached information is complete and correct as determined from all available records

SIGNED [signature] TITLE Operations Manager DATE 11-19-76

*(See Instructions and Spaces for Additional Data on Reverse Side)

INSTRUCTIONS

General: This form is designed for submitting a complete and correct well completion report and log on all types of lands and leases to either a Federal agency or a State agency, or both, pursuant to applicable Federal and/or State laws and regulations. Any necessary special instructions concerning the use of this form and the number of copies to be submitted, particularly with regard to local, area, or regional procedures and practices, either are shown below or will be issued by, or may be obtained from, the local Federal and/or State office. See instructions on items 22 and 24, and 33, below regarding separate reports for separate completions.
If not filed prior to the time this summary record is submitted, copies of all currently available logs (drillers, geologists, sample and core analysis, all types electric, etc.), formation and pressure tests, and directional surveys, should be attached hereto, to the extent required by applicable Federal and/or State laws and regulations. All attachments should be listed on this form, see item 35.
Item 4: If there are no applicable State requirements, locations on Federal or Indian land should be described in accordance with Federal requirements. Consult local State or Federal office for specific instructions.
Item 18: Indicate which elevation is used as reference (where not otherwise shown) for depth measurements given in other spaces on this form and in any attachments.
Items 22 and 24: If this well is completed for separate production from more than one interval zone (multiple completion), so state in item 22, and in item 24 show the producing interval, or intervals, top(s), bottom(s) and name(s) (if any) for only the interval reported in item 33. Submit a separate report (page) on this form, adequately identified, for each additional interval to be separately produced, showing the additional data pertinent to such interval.
Item 29: *"Sacks Cement":* Attached supplemental records for this well should show the details of any multiple stage cementing and the location of the cementing tool.
Item 33: Submit a separate completion report on this form for each interval to be separately produced. (See instruction for items 22 and 24 above.)

37. SUMMARY OF POROUS ZONES:
SHOW ALL IMPORTANT ZONES OF POROSITY AND CONTENTS THEREOF; CORED INTERVALS; AND ALL DRILL-STEM TESTS, INCLUDING DEPTH INTERVAL TESTED, CUSHION USED, TIME TOOL OPEN, FLOWING AND SHUT-IN PRESSURES, AND RECOVERIES

FORMATION	TOP	BOTTOM	DESCRIPTION, CONTENTS, ETC.
Nugget	9275	9332	Rec. 57' Nugget ss, oil stained throughout
DST # 1			
# 2			
# 3			

38. GEOLOGIC MARKERS

NAME	TOP MEAS. DEPTH	TOP TRUE VERT. DEPTH
Wasatch	Surface	
Echo	1910'	(Sample top)
Kelvin	3040'	
Stump	6824'	
Preuss-Salt	7510'	
Bottom Salt	7850'	
Twin Creek		
Giraffe Creek	7916'	
Leads Creek	8309'	
Walton Canyon	8570'	
Boundary Ridge	8794'	
Rich	8837'	
Sliderock	9066'	
Gypsum Springs	9166'	
Nugget	9200'	

BINGHAM #2-1

American Quasar Petroleum
NW SW Sec. 2 T-2N R-7E
Summit County, Utah

BINGHAM #2-1
Summit Co., Utah

11/3/76 RU Western Co. Sand-frac'd Nugget perf's 9620-9700' down 2-7/8" tbg. thru Baker pkr @ 9140'. Broke down formation @ 8400 psi. Mixed & pumped 238 bbls. gelled oil pad, 48 bbls. gelled oil w/½#/gal. 100-mesh sd, 96 bbls. w/100#/gal 100-mesh sd, 48 bbls. w/2#/gal 100-mesh sd, 96 bbls. w/½#/gal 20-40 sd, 192 bbls. w/1#/gal 20-40 sd & 24 bbls. w/1#/gal Benzoic Acid Flakes (diverting agent). Repeated above & flushed w/80 bbls. lse crude. Max. pressure 8400 psi; aver. treating pressure 6500 psi; aver. treating rate 16 bpm. ISIP 3300 psi; 15-min. SIP 2250 psi. 1540 bbls. load to recover. CIW & SDFN.

Daily cost: $28,000

BINGHAM #2-1
Summit Co., Utah

11/4/76 14-hr. SITP 800 psi. Flowed well 22 hrs. on 18/64" chk. Produced 818 BO, no wtr. (Gas rate not available.) FTP 900 psi. 772 BLO left to recover.

BINGHAM #2-1
Summit Co., Utah

11/5/76 Flowed 24 hrs. on 18/64" chk. Produced 880 BO, no wtr. FTP 950 psi. Gas rate indeterminate due to oil flooding gas section of thermopac. Rec. all load + 108 bbls. new oil. Will continue to flow & test.

Total cost to date: $85,000

BINGHAM #2-1
Summit Co., Utah

11/6/76 Flowed 22 hrs. on 18/64" chk. Produced 672 BO, no wtr. Gas rate 564 MCFD (GOR 769). FTP 1000.

11/7 Flowed 22 hrs. on 18/64" chk. Produced 763 BO, no wtr. Gas rate 682 MCFD. FTP 1050 psi.

11/8 Completion Gauge: Flowed well 3 hrs. on 9/64" chk ARO 39.25 BOPH (942 BOPD). Gas rate 835 MCFD. (GOR 886.) FTP 1025 psi. Well completed 11/7/76. (DROP FROM REPORT.)

BINGHAM #2-1
American Quasar Petroleum
NW SW Sec. 2-T2N-R7E
Summit Co., Utah

BINGHAM #2-1
Summit Co., Utah

3/29/79 RU GO to perf Nugget interval (9526-9502', 9492-9474', & 9456-9402'). TIH w/30' x 2 1/8" tbg gun. Would not go past 6190'. POH; RIH w/2 1/8" x 17' jars; went thru with no problem; POH; RIH w/2 1/8" x 20' gun; would not go thru; POH. CIWSDFN. Prep to run 1 9/16" x 20' gun.

BINGHAM #2-1
Summit Co., Utah

3/30/79 TIH w/1 9/16" x 20' perf gun to 7490'; would not go further. POH. brk gn dn to 10'; TIH; gun hung up @ 9490'. Tried to spud thru; could not. POH. RD & rlsd GO. DROP FROM REPORT PENDING FURTHER ACTIVITY.

Cost to Date (this job) $6500

BINGHAM 2-1
Summit County, UT

4/28/81 - MI Gamache #5. Prep to swab.

BINGHAM 2-1
Summit County, UT

4/29/81 - RU Gamache #5. Swabbed 10 runs, 4 hrs. Rec 40 BO & wtr. Well kicked off & started flowing. Flowed 18 bbls in 1½ hrs, 60 psi & died.

BINGHAM 2-1
Summit County, UT

5/22/81 - (Casing evaluation) - MIRU Gamache #5. Pump 50 bbl treated fma wtr down tbg. ND tree, NU BOP, RU floor. Load csg w/18 BW, sting out of pkr. TOH w/1 6' sub & 1 8' sub & 148 std tbg. LD seal assy. CWI. CWC $3200.

5/23/81 - TD PU 6" OD mill shoe, 2 JB & bumper sub, 6 3½" DC. TIH w/118 std & single. Tight @7526'. Fell thru w/16,000#. TIH w/25 std & single. Install drlg head, PU power swivel. Mill on pkr @9140-9142' 3½ hrs, PU 19 jts tbg 9720'. LD 12 jts tbg, TOH w/44 stds tbg (mill pulled 8000 @7526) CWI. CWC $9200.

BINGHAM 2-1
Summit County, UT

5/26/81 - FTOH. LD 6 3½" DC, jars, bumper sub, 2 JB & mill. RU Petrolog. Set Howco EZSV cemt retnr @9481'. PU stinger, TIH w/154 std & 6' & 10' sub. Sting into retnr. RU Howco, Test liner 5500 psi. Press csg 1500 psi, estab inj rate 4 BPM @1200 psi. Mix & pump 125 sx G w/1% CFR2. Squeeze perf 9620-9700' to 6000 psi. Sting out, reverse out 4 bbls cemt, TOH. LD stinger, CWI. CWC $19,200.

BINGHAM 2-1
Summit County, UT

5/27/81 - RU Petrolog. Perf 9322-33, 9310-15, 9286-9300, 9302-06 & 9255-81' w/4" csg gun, 1 SPF. PU Baker 7" 23# R3 double grip w/R-no-go 2.25 ID in top. TIH w/120 std & single 2 7/8" 6.5# N80 8Rd tbg. Set pkr @7454 w/18,000#. Test pkr 1500 psi, ND BOP. NU tree. Break down w/rig pump 3500 psi 3/4 BPM. Swab 2½ hrs, rec 45 BW. FL 7000'. CWI. CWC $28,200.

BINGHAM 2-1
Summit County, UT

5/28/81 - TP 500 psi, RU Smith Energy Co, Test lines 6000 psi, acdz w/6000 gal 15% HCl & 120 7/8" 1.1 SP Gr ball slrs. Max 4600 psi, min 2400 psi, avg 3000 psi, avg rate 6 BPM, good ball action. ISIP 500 psi, 0 psi, 2 min. 265 bbl to rec, FL 1200' 1st run, swab & flow to test tank 6 hr, rec 380 BF. Turn to tank battery 5:15 PM, 18/64" ck. Overnight the well flowed estimated daily rate of 586 BO, 0 BW, no gas reading, 750 psi FTP. CWC $38,200.

BINGHAM 2-1
Summit County, UT

5/29/81 - RDMO Gamache #5. CWC $38,700. Drop from report until tested.

BINGHAM 2-1
Summit County, UT

7/6/81 - On 24 hr test 7/3/81, well flowed 511 BO, 0 BW, 549 MCFG on 20/64" ck, 650 psi FTP. From Nugget perfs 9255-81, 9286-9300', 9302-9306', 9310-9315', 9322-9333'. Casing evaluation and plugback complete. FINAL REPORT

43-043-30086
SWSW 3-2N-7E

CHEMICAL & GEOLOGICAL LABORATORIES

P. O. Box 2794
Casper, Wyoming

WATER ANALYSIS REPORT

OPERATOR: American Quasar Petroleum Co.
WELL NO.: 3-7S Pineview
FIELD: Pineview
COUNTY: Summit
STATE: Utah

DATE: January 24, 1979 LAB NO. 29846-1
LOCATION: SW SW 3-2N-7E
FORMATION: STUMP
INTERVAL: 6061-6271
SAMPLE FROM: DST No.1 (Top) 12-6-78

REMARKS & CONCLUSIONS:

Cations	mg/l	meq/l	Anions	mg/l	meq/l
Sodium	708	30.79	Sulfate	337	7.01
Potassium	90	2.30	Chloride	590	16.64
Lithium			Carbonate	48	1.60
Calcium	3	0.15	Bicarbonate	512	8.40
Magnesium	5	0.41	Hydroxide		
Iron	-		Hydrogen sulfide	-	
Total Cations		33.65	Total Anions		33.65

Total dissolved solids, mg/l: 2033
NaCl equivalent, mg/l: 1768
Observed pH: 8.7

Specific resistance @ 68°F.:
Observed: 3.30 ohm-meters
Calculated: 3.37 ohm-meters

WATER ANALYSIS PATTERN

Sample above described

Scale
MEQ per Unit

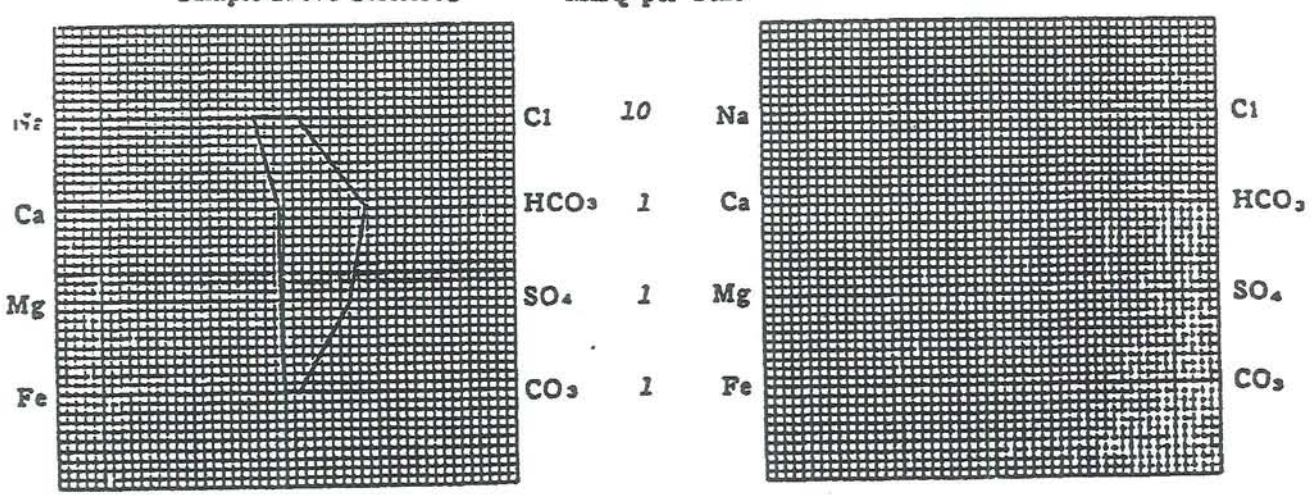

(Na value in above graphs includes Na, K, and Li)
NOTE: Mg/l = Milligrams per liter Meq/l = Milligram equivalents per liter
Sodium chloride equivalent = by Dunlap & Hawthorne calculation from components

43-043-30120
SW NW 3-2N-7E

CL1-12A (REV. 1964)

CHEMICAL & GEOLOGICAL LABORATORIES

P. O. Box 2794
Casper, Wyoming

WATER ANALYSIS REPORT

OPERATOR American Quasar Petroleum Co. DATE July 10, 1979 LAB NO. 31327-3
WELL NO. UPRR 3-8S LOCATION
FIELD FORMATION KELVIN
COUNTY INTERVAL 3090-3197
STATE SAMPLE FROM DST No. 1 (Sampler)

REMARKS & CONCLUSIONS: No other information given.

Cations	mg/l	meq/l	Anions	mg/l	meq/l
Sodium	560	24.38	Sulfate	20	0.42
Potassium	17	0.44	Chloride	610	17.20
Lithium			Carbonate	48	1.60
Calcium	16	0.80	Bicarbonate	415	6.81
Magnesium	5	0.41	Hydroxide		
Iron	-		Hydrogen sulfide	-	
Total Cations		26.03	Total Anions		26.03

Total dissolved solids, mg/l 1480
NaCl equivalent, mg/l 1395
Observed pH 8.2

Specific resistance @ 68°F.:
Observed 4.10 ohm-meters
Calculated 4.30 ohm-meters

WATER ANALYSIS PATTERN

Sample above described

Scale
MEQ per Unit

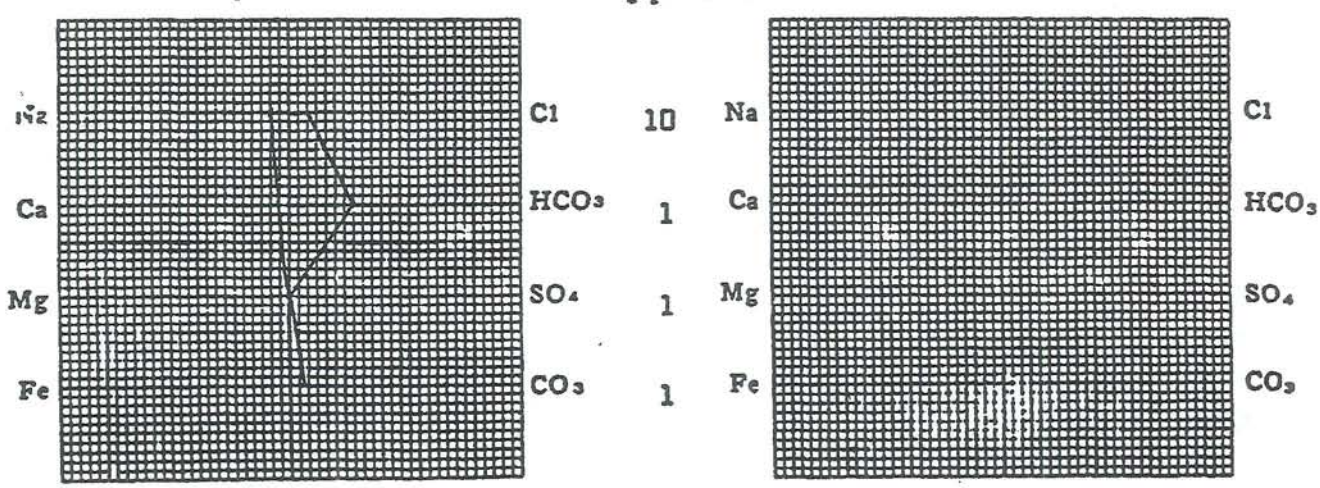

(Na value in above graphs includes Na, K, and Li)
NOTE: Mg/l = Milligrams per liter Meq/l = Milligram equivalents per liter
Sodium chloride equivalent = by Dunlap & Hawthorne calculation from components

CL1-12A (REV. 1964)

43-043-30120
SW NW 3-2N-7E

CHEMICAL & GEOLOGICAL LABORATORIES

P. O. Box 2794
Casper, Wyoming

WATER ANALYSIS REPORT

OPERATOR American Quasar Petroleum Co.
WELL NO. UPRR 3-8S
FIELD
COUNTY
STATE

DATE July 10, 1979 LAB NO. 31327-2
LOCATION
FORMATION KELWIN
INTERVAL 3090-3197
SAMPLE FROM DST No. 1 (Bottom)

REMARKS & CONCLUSIONS: No other information given.

Cations	mg/1	meq/1	Anions	mg/1	meq/1
Sodium	590	25.67	Sulfate	32	0.67
Potassium	17	0.44	Chloride	620	17.48
Lithium			Carbonate	36	1.20
Calcium	15	0.75	Bicarbonate	488	8.00
Magnesium	6	0.49	Hydroxide		
Iron	-		Hydrogen sulfide	-	
Total Cations		27.35	Total Anions		27.35

Total dissolved solids, mg/1 - 1556
NaCl equivalent, mg/1 - 1446
Observed pH - 8.3

Specific resistance @ 68°F.:
Observed - 4.00 ohm-meters
Calculated - 4.10 ohm-meters

WATER ANALYSIS PATTERN

Sample above described

Scale
MEQ per Unit

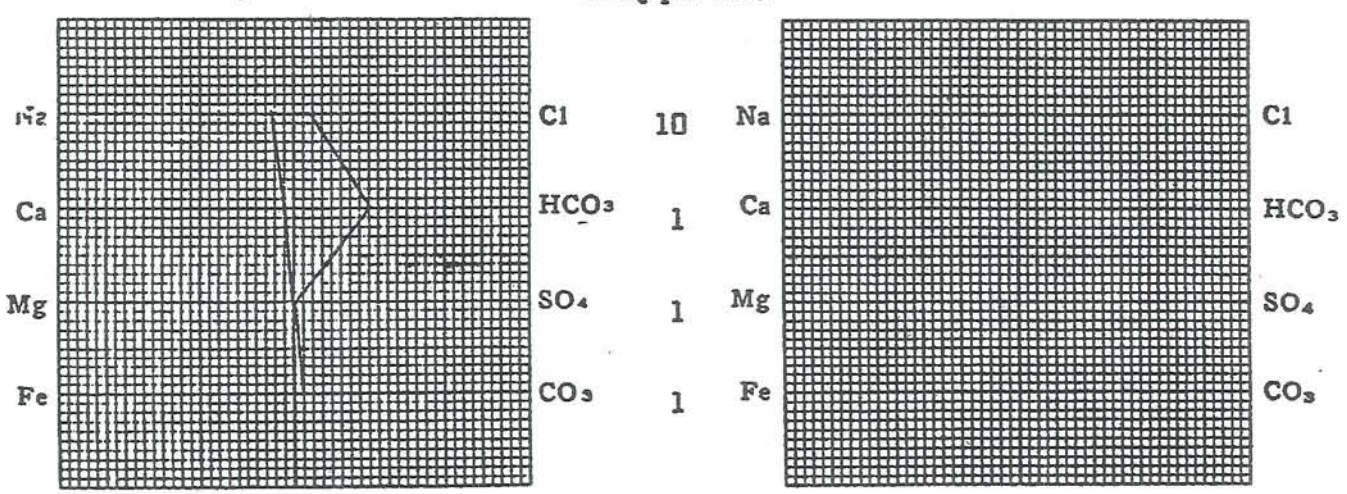

(Na value in above graphs includes Na, K, and Li)
NOTE: Mg/1 = Milligrams per liter Meq/1 = Milligram equivalents per liter
Sodium chloride equivalent = by Dunlap & Hawthorne calculation from components

Form OGC-1b

SUBMIT IN TRIPLICATE*
(Other instructions on reverse side)

STATE OF UTAH
DEPARTMENT OF NATURAL RESOURCES
DIVISION OF OIL, GAS, AND MINING

SUNDRY NOTICES AND REPORTS ON WELLS

(Do not use this form for proposals to drill or to deepen or plug back to a different reservoir. Use "APPLICATION FOR PERMIT—" for such proposals.)

1. OIL WELL [X] GAS WELL [ ] OTHER

2. NAME OF OPERATOR: American Quasar Petroleum Co. of New Mexico

3. ADDRESS OF OPERATOR: 707 United Bank Tower, 1700 Broadway Denver, CO 80290

4. LOCATION OF WELL (Report location clearly and in accordance with any State requirements.* See also space 17 below.) At surface: 682' FNL, 3279' FWL (NW NE)

5. LEASE DESIGNATION AND SERIAL NO.: FEE

6. IF INDIAN, ALLOTTEE OR TRIBE NAME:

7. UNIT AGREEMENT NAME:

8. FARM OR LEASE NAME: Bingham

9. WELL NO.: 10-1

10. FIELD AND POOL, OR WILDCAT: Pineview-Nugget & Twin Creek

11. SEC., T., R., M., OR BLK. AND SURVEY OR AREA: Sec. 10, T2N-R7E

12. COUNTY OR PARISH: Summit

13. STATE: Utah

14. PERMIT NO.:

15. ELEVATIONS (Show whether DF, RT, GR, etc.): 6761 GR

16. **Check Appropriate Box To Indicate Nature of Notice, Report, or Other Data**

NOTICE OF INTENTION TO:				SUBSEQUENT REPORT OF:			
TEST WATER SHUT-OFF	[ ]	PULL OR ALTER CASING	[ ]	WATER SHUT-OFF	[ ]	REPAIRING WELL	[ ]
FRACTURE TREAT	[ ]	MULTIPLE COMPLETE	[ ]	FRACTURE TREATMENT	[ ]	ALTERING CASING	[ ]
SHOOT OR ACIDIZE	[ ]	ABANDON*	[ ]	SHOOTING OR ACIDIZING	[ ]	ABANDONMENT*	[ ]
REPAIR WELL	[ ]	CHANGE PLANS	[ ]	(Other) Reperforate			[XX]
(Other) Reperforate			[XX]	(NOTE: Report results of multiple completion on Well Completion or Recompletion Report and Log form.)			

17. DESCRIBE PROPOSED OR COMPLETED OPERATIONS (Clearly state all pertinent details, and give pertinent dates, including estimated date of starting any proposed work. If well is directionally drilled, give subsurface locations and measured and true vertical depths for all markers and zones pertinent to this work.)*

See Attached.

producing out of Twin Creek
Nugget P/A

APPROVED BY THE DIVISION OF OIL, GAS, AND MINING
DATE: 11/4/80
BY: ORIGINAL SIGNED BY C.A. FENGHT

RECEIVED
NOV 3 1980
DIVISION OF OIL, GAS & MINING

18. I hereby certify that the foregoing is true and correct

SIGNED [signature] TITLE Division Operations Manager DATE 10/10/80

(This space for Federal or State office use)

APPROVED BY _____ TITLE _____ DATE _____
CONDITIONS OF APPROVAL, IF ANY:

*See Instructions on Reverse Side

Attachment to Sundry Notice and Report on Wells
Bingham 10-1
October 10, 1980

17. 9/13/80. MIR, killed well.
Released pkrs, pulled tbg.
Ran 29 jts 4½" 14.98# and 31 jts 4½" 13.04# liner
Cemtd w/300 sx Class G w/2% gel, 10# Gilsonite and 3/4 of 1% CFR2, followed by 80 sx Class G w/10# Gilsonite and 3/4 of 1% CFR2, displaced w/71 bbls treated produced water.
Top of liner 7346', landing collar 9764', shoe 9806'.
Set pkr @6850'.
Mixed & pumped 200 sx Class G w/.6% of 1% Halide 9, displaced w/45 BW, WOC 6 hrs, pumped 200 sx Class G, displaced w/50 BW.
Rlsd pkr.
Drld cemt, circ hole.
Ran GR-CCL 9750-8000'.
Perfd 9469-9455, 9440-9413, 9355-9465, 9300-9316, 2 SPF w/3 1/8" gun.
Set pkr @7528'.
Acdz perfs w/7500 gals 28% HCl w/140 7/8" 1.1 sp cr balls.
Swabbed & flowed.
Released pkr.
Ran 2 7/8" tbg & Reda pump.

RECEIVED
NOV 3 1980
DIVISION OF
OIL, GAS & MINING

Form OGC-3

13

STATE OF UTAH
DEPARTMENT OF NATURAL RESOURCES
DIVISION OF OIL, GAS, AND MINING

SUBMIT IN DUPLICATE*
(See other instructions on reverse side)

FEB 0 1981
DIVISION OF OIL, GAS & MINING

WELL COMPLETION OR RECOMPLETION REPORT AND LOG

1a. TYPE OF WELL: OIL WELL [X] GAS WELL [ ] DRY [ ] Other

b. TYPE OF COMPLETION: NEW WELL [ ] WORK OVER [ ] DEEP-EN [ ] PLUG BACK [ ] DIFF. RESVR. [ ] Other

2. NAME OF OPERATOR: American Quasar Petroleum Co. of New Mexico

3. ADDRESS OF OPERATOR: 707 United Bank Tower, 1700 Broadway, Denver, CO 80290

4. LOCATION OF WELL (*Report location clearly and in accordance with any State requirements*)*
At surface: 350' FWL, 1200' FSL (SWSW)
At top prod. interval reported below
At total depth

5. LEASE DESIGNATION AND SERIAL NO.: FEE
6. IF INDIAN, ALLOTTEE OR TRIBE NAME:
7. UNIT AGREEMENT NAME:
8. FARM OR LEASE NAME: Bingham
9. WELL NO.: 2-1A
10. FIELD AND POOL, OR WILDCAT: Pineview-Nugget
11. SEC., T., R., M., OR BLOCK AND SURVEY OR AREA: Sec. 2, T2N-R7E
12. COUNTY OR PARISH: Summit
13. STATE: Utah

14. PERMIT NO.: 43-043-30125 DATE ISSUED: 1/16/80

15. DATE SPUDDED	16. DATE T.D. REACHED	17. DATE COMPL. (*Ready to prod.*)	18. ELEVATIONS (DF, RKB, RT, GR, ETC.)*	19. ELEV. CASINGHEAD
2/8/80	5/22/80	1/23/81	6864 GR	--

20. TOTAL DEPTH, MD & TVD	21. PLUG, BACK T.D., MD & TVD	22. IF MULTIPLE COMPL., HOW MANY*	23. INTERVALS DRILLED BY	ROTARY TOOLS	CABLE TOOLS
10350'	9748'	--	→	0-TD	--

24. PRODUCING INTERVAL(S), OF THIS COMPLETION—TOP, BOTTOM, NAME (MD AND TVD)*: 9431-9507 Nugget

25. WAS DIRECTIONAL SURVEY MADE: Yes

26. TYPE ELECTRIC AND OTHER LOGS RUN: DLL-GR, FDC-CNL, HDT, BHC, Sonic

27. WAS WELL CORED: No

28. CASING RECORD (*Report all strings set in well*)

CASING SIZE	WEIGHT, LB./FT.	DEPTH SET (MD)	HOLE SIZE	CEMENTING RECORD	AMOUNT PULLED
13 3/8	48#	86	17½	8 yds Ready mix	None
9 5/8	36#	1590	12¼	825 sx cemt	None
5 1/2	17#, 20#	10350	8 3/4	3075 sx cemt	None

29. LINER RECORD

SIZE	TOP (MD)	BOTTOM (MD)	SACKS CEMENT*	SCREEN (MD)

30. TUBING RECORD

SIZE	DEPTH SET (MD)	PACKER SET (MD)
2 7/8	7422	7422

31. PERFORATION RECORD (*Interval, size and number*)
9920-9951, 2 SPF, 4" csg gun
9431-9507, 2 SPF, 4" csg gun

32. ACID, SHOT, FRACTURE, CEMENT SQUEEZE, ETC.

DEPTH INTERVAL (MD)	AMOUNT AND KIND OF MATERIAL USED
See	Attached

33.* PRODUCTION

DATE FIRST PRODUCTION: 7/8/80
PRODUCTION METHOD (*Flowing, gas lift, pumping—size and type of pump*): Pumping
WELL STATUS (*Producing or shut-in*): Producing

DATE OF TEST	HOURS TESTED	CHOKE SIZE	PROD'N. FOR TEST PERIOD	OIL—BBL.	GAS—MCF.	WATER—BBL.	GAS-OIL RATIO
1/23/81	4		→	234	150	17	641

FLOW. TUBING PRESS.	CASING PRESSURE	CALCULATED 24-HOUR RATE	OIL—BBL.	GAS—MCF.	WATER—BBL.	OIL GRAVITY-API (CORR.)
		→	1404	899	102	45.1

34. DISPOSITION OF GAS (*Sold, used for fuel, vented, etc.*): Sale - Mountain Fuel Supply

TEST WITNESSED BY: Joe Hathorn

35. LIST OF ATTACHMENTS

36. I hereby certify that the foregoing and attached information is complete and correct as determined from all available records

SIGNED [signature] TITLE Division Operations Manager DATE 1/26/81

*(See Instructions and Spaces for Additional Data on Reverse Side)

INSTRUCTIONS

General: This form is designed for submitting a complete and correct well completion report and log on all types of lands and leases to either a Federal agency or a State agency, or both, pursuant to applicable Federal and/or State laws and regulations. Any necessary special instructions concerning the use of this form and the number of copies to be submitted, particularly with regard to local, area, or regional procedures and practices, either are shown below or will be issued by, or may be obtained from, the local Federal and/or State office. See instructions on items 22 and 24, and 33, below regarding separate reports for separate completions.
If not filed prior to the time this summary record is submitted, copies of all currently available logs (drillers, geologists, sample and core analysis, all types electric, etc.), formation and pressure tests, and directional surveys, should be attached hereto, to the extent required by applicable Federal and/or State laws and regulations. All attachments should be listed on this form, see item 35.
Item 4: If there are no applicable State requirements, locations on Federal or Indian land should be described in accordance with Federal requirements. Consult local State or Federal office for specific instructions.
Item 18: Indicate which elevation is used as reference (where not otherwise shown) for depth measurements given in other spaces on this form and in any attachments.
Items 22 and 24: If this well is completed for separate production from more than one interval zone (multiple completion), so state in item 22, and in item 24 show the producing interval, or intervals, top(s), bottom(s) and name(s) (if any) for only the interval reported in item 33. Submit a separate report (page) on this form, adequately identified, for each additional interval to be separately produced, showing the additional data pertinent to such interval.
Item 29: *"Sacks Cement":* Attached supplemental records for this well should show the details of any multiple stage cementing and the location of the cementing tool.
Item 33: Submit a separate completion report on this form for each interval to be separately produced. (See instruction for items 22 and 24 above.)

37. SUMMARY OF POROUS ZONES:
SHOW ALL IMPORTANT ZONES OF POROSITY AND CONTENTS THEREOF; CORED INTERVALS; AND ALL DRILL-STEM TESTS, INCLUDING DEPTH INTERVAL TESTED, CUSHION USED, TIME TOOL OPEN, FLOWING AND SHUT-IN PRESSURES, AND RECOVERIES

FORMATION	TOP	BOTTOM	DESCRIPTION, CONTENTS, ETC.

38. GEOLOGIC MARKERS

NAME	TOP MEAS. DEPTH	TOP TRUE VERT. DEPTH
Echo	2000	
Kelvin	3038	
Stump	6788	
Preuss	7229	
Twin Creek	7870	
Nugget	9314	

Attachment to Well Completion Report
Bingham 2-1A
January 26, 1981

32. Acdz perfs 9920-9951 w/3000 gals 15% HCl w/60 7/8" RCN balls, flush w/88 bbls treated formation wtr.

Acdz perfs 9431-9507 w/7500 gals 15% & 150 RCN ball sealers.

Frac'd perfs 9431-9507 w/42,000 gals 50#/M-gel, started sd in @1¼ ppg, pumped 20,000 gals 50# gel w/1¼#/gal 20-40 sd at end of 20,000 gals, incrsd sd concentration to 2¼#/Gal. Pumped total of 21470 gals gel w/sd cencentration of 2.25-2.5#/gal. Pumped 1470 gals flush. Total volume 85,190 gals, est 60,675# sd in formation.

BINGHAM 2-1A
Summit County, UT

6/21/80 - TP 1200, pump 65 bbls treated formation wtr down tbg. ND tree, NU BOP. Test BOP 4000 psi. Release pkr, TOH, LD pkr. Install tbg hanger w/8' pup below 6' pup above. Test hydril 3000psi, BOP 4000 psi. CWI. CWC $3600.

BINGHAM 2-1A
Summit County, UT

6/24/80 - SITP 300. Halliburton RU to frac well. Pumped 42,000 gals 50#/M-gal gel @27.2 BPM @3700 psi. Started sd in at 1¼ ppg w/sd on perfs going @27 BPM @3600 psi. Pumped 20,000 gals 50# gel w/1¼#/gal 20-40 sd @ end of 20,000 gals, pumping at 27.5 BPM, 3980 psi. Incrsd sd concentration to 2¼#/gal. W/10,000 gals pumped, press increased to 4100 psi, dropped rate to 24.9 BPM. Pumped total of 21,470 gals gel w/sd concentration of 2.25-2.5#/gal. When rate reached 6 BPM, dropped out sd, started flush. Pumped 1470 gals flush, rate 5 BPM @4100 psi. SD. Est 18,000# sd in csg approx 1500' fill. Total volume pumped 85,190 gals. Est 60,675# sd in formation. ISIP 4000 psi, 15 min 3030. Total load 2028 bbls. SWI for gel to break. CWC $77,000.

BINGHAM 2-1A
Summit County, UT

6/25/80 - CP 50#. Open well to pit, dead 15 min. Remove tbg hanger, PU 4 5/8" used bit, 2 3½" DC's. TIH to 7650', PU 37 jts tbg. PU power swivel, install stripper. Wash out sand from 8585-8646'. Circ hole clean. CWI, CWC $158,200.

BINGHAM 2-1A
Summit County, UT

6/26/80 - Rig repair 8 hrs, attempt break circ. Bit plugged. LD swivel. TOH w/40 stds tbg. CWC $160,700.

BINGHAM 2-1A
Summit County, UT

6/27/80 - Fin TOH. Clean sd from 15 jts tbg & 2 DC. TIH, tag sd @8556' (last 90'). Install stripper, PU power swivel. Wash sd from 8556-8765'. Circ hole clean, LD swivel, pull 4 stds. CWI. CWC $104,650.

BINGHAM 2-1A
Summit County, UT

6/28/80 - Run 4 stds tbg IH. PU power swivel. Wash sd from 8765-9480. Circ hole clean. LD power swivel. Pull 5 stds tbg. CWI. CWC $167,650.

6/29/80 - TIH w/5 stds tbg. PU power swivel. Wash sd 9480-9740'. Tbg pin stripped out of collar @604'. TOH. WO fishing tools. PU 4½" OD O/S. TIH. Catch fish. LD 20 jts tbg, LD O/S, pull 10 stds tbg. CWI. CWC $12,650.

BINGHAM 2-1A
Summit County, UT

6/30/80 - Fin TOH, LD bit & 2 DC. Run 5½" Baker R3 pkr & 121 stds tbg. Set pkr @7422 w/20,000# compression. Test csg 1200 psi. ND BOP, NU tree. Swab 1 hr, rec 20 BW. FL 1500'. CWI. CWC $174,450.

Date: 03/04/2010

Citation OIL & GAS CORP.

CURRENT WELLBORE DIAGRAM AND INFORMATION

Well Name: Bingham 2-1 (As of 3/04/10)
Field: Pineview
Location: 3273' FNL, 666' FWL, NW SW, Sec 2, T-2-N, R-7-E
County: Summit
State: Utah

D&C:	July - October 1976
Elevation:	6810' (GL), 6827' KB
KB:	17'

Production Test: 65 BO + 161 MCF + 725 BWPD (Dec 2009)

Mark II 640-365-144 Mark II Unit
w/ a size 4 Sargent Econo-pak Motor

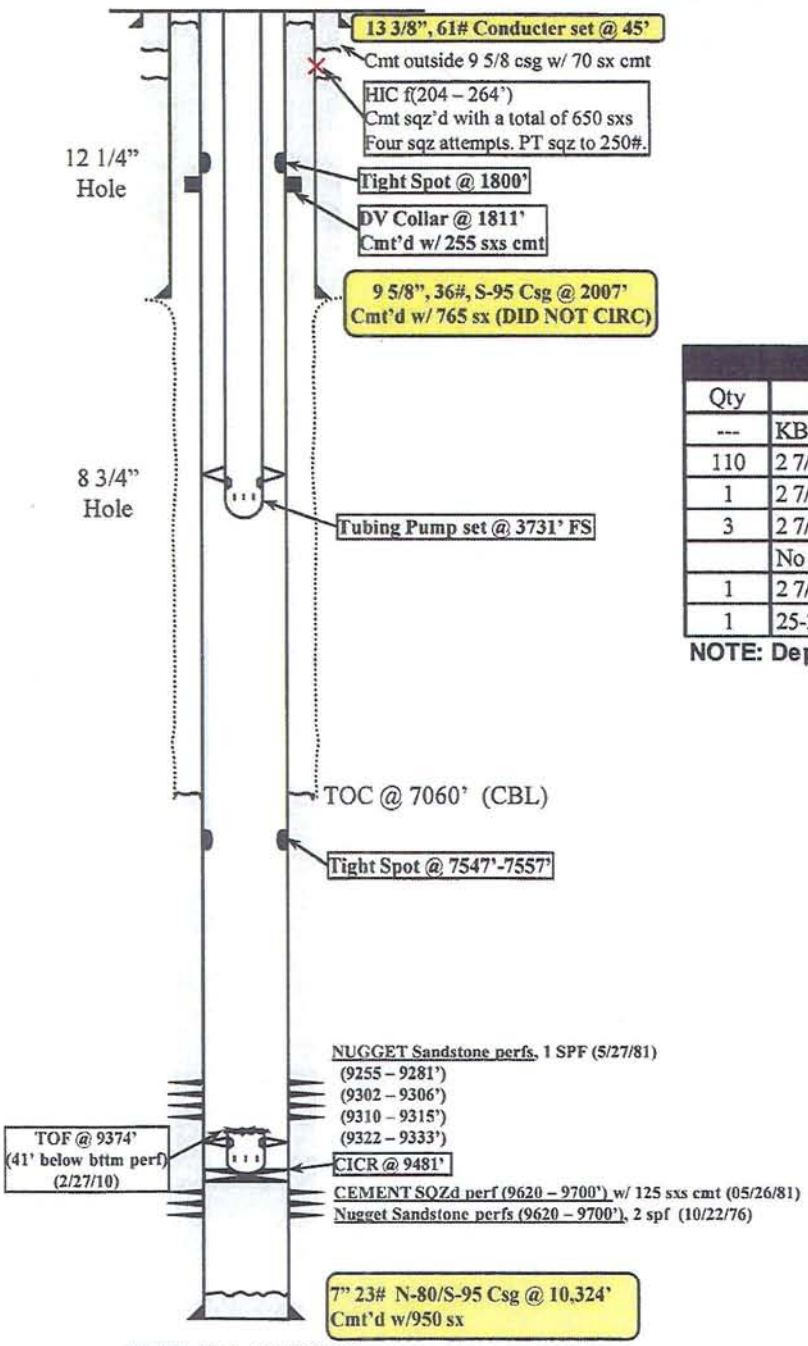

PBTD @ 9,481'(CICR)
PBTD @ 10,295'
TD @ 10,327'

CASING DETAIL

Size	Weight	Grade	Depth
13 3/8"	61#	na	45'
9 5/8"	36	S-95	Surf - 2007'
7"	23	S-95/N-80	Surf - 10324'

TUBING DETAIL

Qty	Description	Length	Depth
---	KB	17	17
110	2 7/8" 6.5# L-80 8rd tbg	3645	3662
1	2 7/8" x 7" TAC w/ Carbide Slips	2.35	3664
3	2 7/8" 6.5# L-80 8rd tbg w/ J55 collars	32	3696
	No relief sub		
1	2 7/8" x 8' sub	10	3706
1	25-275-THEP-20-25 MS 222"	25	3731

NOTE: Depths Approximate

ROD DETAIL

Qty	Size	Type	Length
4	1"	Subs (2', 4', 6', 6')	2
70	1"	Grade D (slick)	1,775
23	7/8"	Grade D (slick)	550
47	3/4"	Grade D (slick)	1,225
4	1"	Grade D (slick & Guided)	100
1		On-Off Tool	0.3

Polish Roc 1 1/2" x 30' Polish Rod
Pump: Tubing Pump 25-275-THEP-20-25

7" Production Casing (Top to Bttm)

43 jts 23 ppf, N-80, Buttress	@ 1811''
DV Collar	@ 1813'
20 jts 23 ppf, N-80, Buttress	@ 2650'
70 jts 23 ppf, N-80, LT&C	@ 5854'
33 jts 23 ppf, S-95, LT&C	@ 7315'
66 jts 23 ppf, S-95, Sandblasted	@ 10,278'
Float Collar	@ 10,281'
1 jt 23 ppf, S-95, LT&C	@ 10,321'
Float Shoe	@ 10,324'

CITATION OIL AND GAS CORPORATION
WELLBORE DIAGRAM AND INFORMATION

Well Name: Bingham #2-1A
Date: August 20, 2003

Field: Pineview
Location: SW SW, Section 2, T-2-N, R-7-E

County: Summit

State: Utah

Surface:	**1200' FSL & 350' FWL**
	SW SW, Section 2 , T-2-N, R-7-E
	Summit County, UT
Completed:	**May 1080**
Grd. Elev.:	**6885'**
KB:	**20'**
API #:	**43-043-30317**

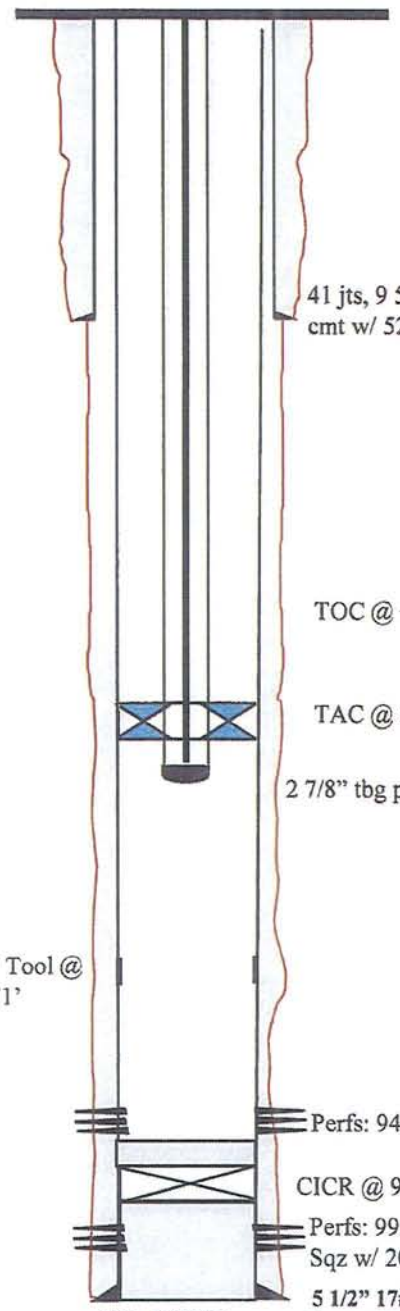

41 jts, 9 5/8", K-55 @ 1590'
cmt w/ 525 sx Halco lite and 300 sx "G"

TOC @ +/- 3700 (CBL)

TAC @ 3367'

2 7/8" tbg pump 2.5" x 2.75" x 20' x 22' x 25'

DV Tool @ 7871'

Perfs: 9431-9507' 2 SPF

CICR @ 9758'

Perfs: 9920-9951' 2SPF
Sqz w/ 20 sx

5 1/2" 17# & 20#, N-80, K-55 & S-95 Csg @ 10350
Cmt w/ 3075 sx

TD: 10350'
PBTD: 9748'

ROD DETAIL

Size	Length	Grade	Depth
1"	1041	D	Surf - 1041
7/8"	1100	D	1041-2141
3/4"	1250	D	2141-3391
1"	100	D	3391-3491
on/off tool			3491

CASING DETAIL

Size	Weight	Grade	Depth
9 5/8	36	K-55	Surf - 1590
5 1/2	17	N-80	Surf - 2654
5 1/2	17	K-55	2654 - 7007
5 1/2	20	S-95	7007 - 8003
5 1/2	17	N-80	8003 - 10350

TUBING DETAIL

Qty	Description	Length	Depth
---	KB (used)	17	17.00
116	2 7/8", 6.5#, L-80, 8rd EUE tb	3,624.61	3,641.61
1	2 7/8" X 5" TAC	2.34	3,643.95
1	2 7/8", 6.5#, N-80, 8rd EUE th	6.20	3,650.15
1	2 7/8" tubing pump	27.19	3,677.34

Pineview Field

Cross-Section

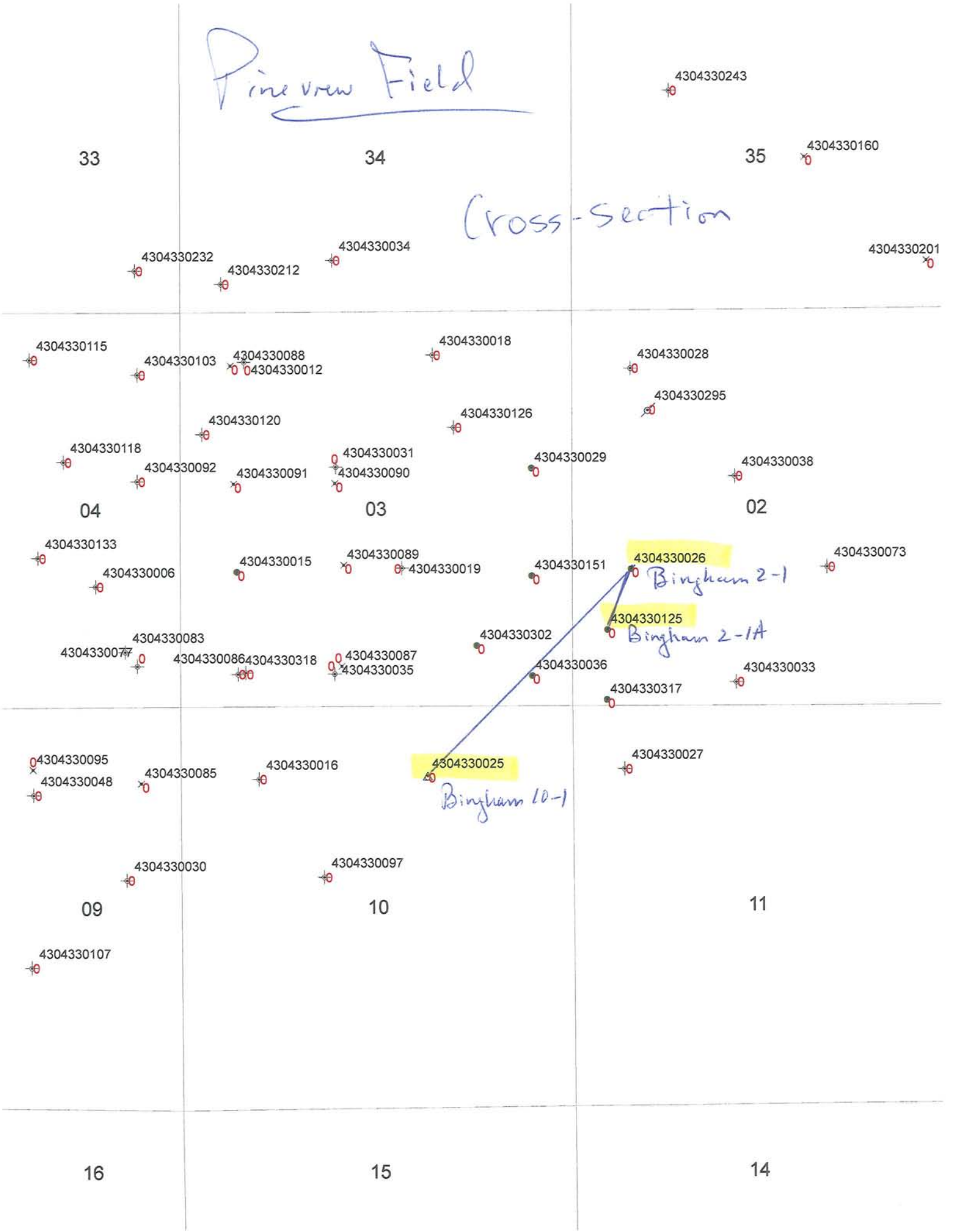

43-043-30025 43-043-30026 43-043-30125

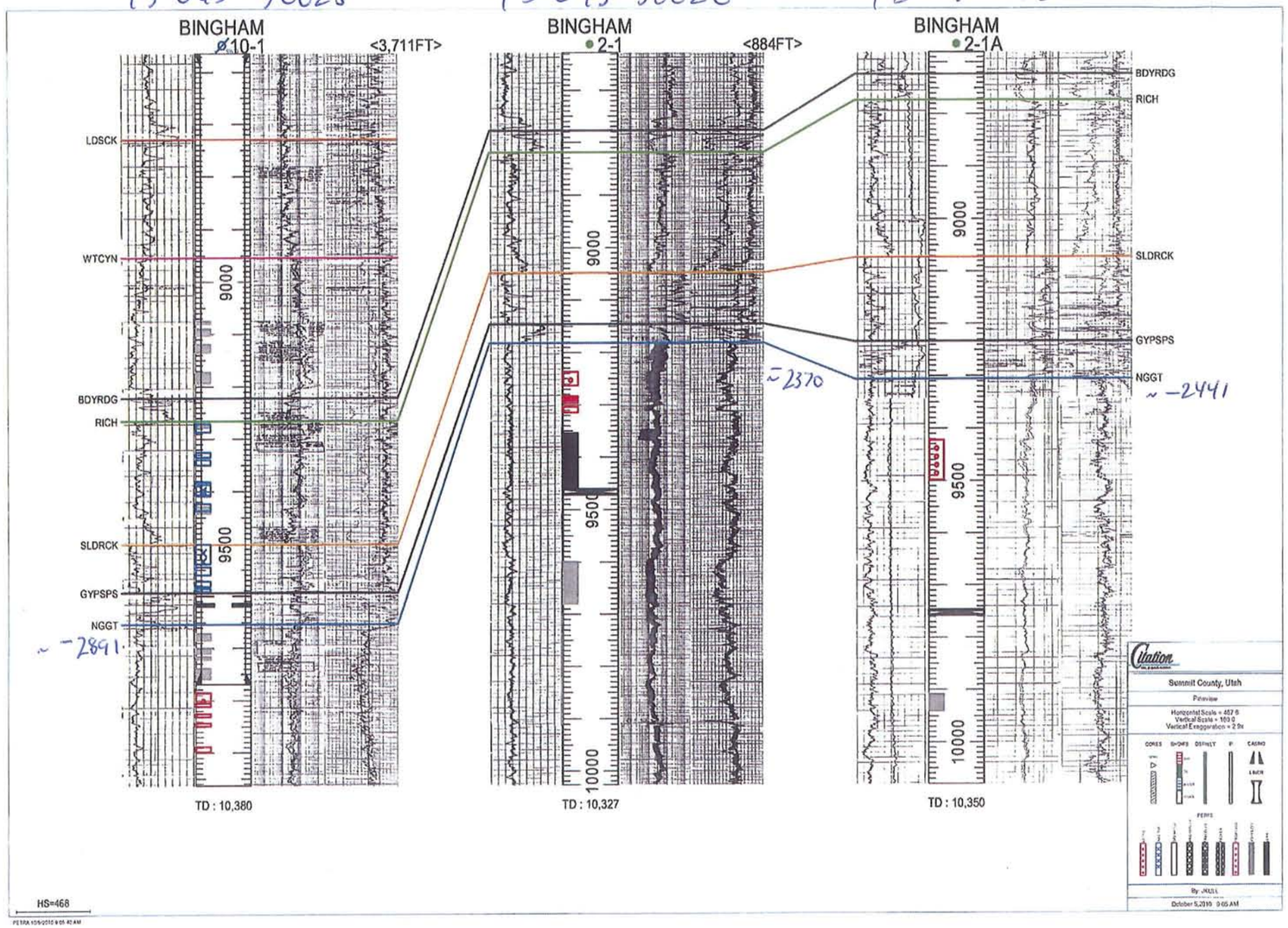

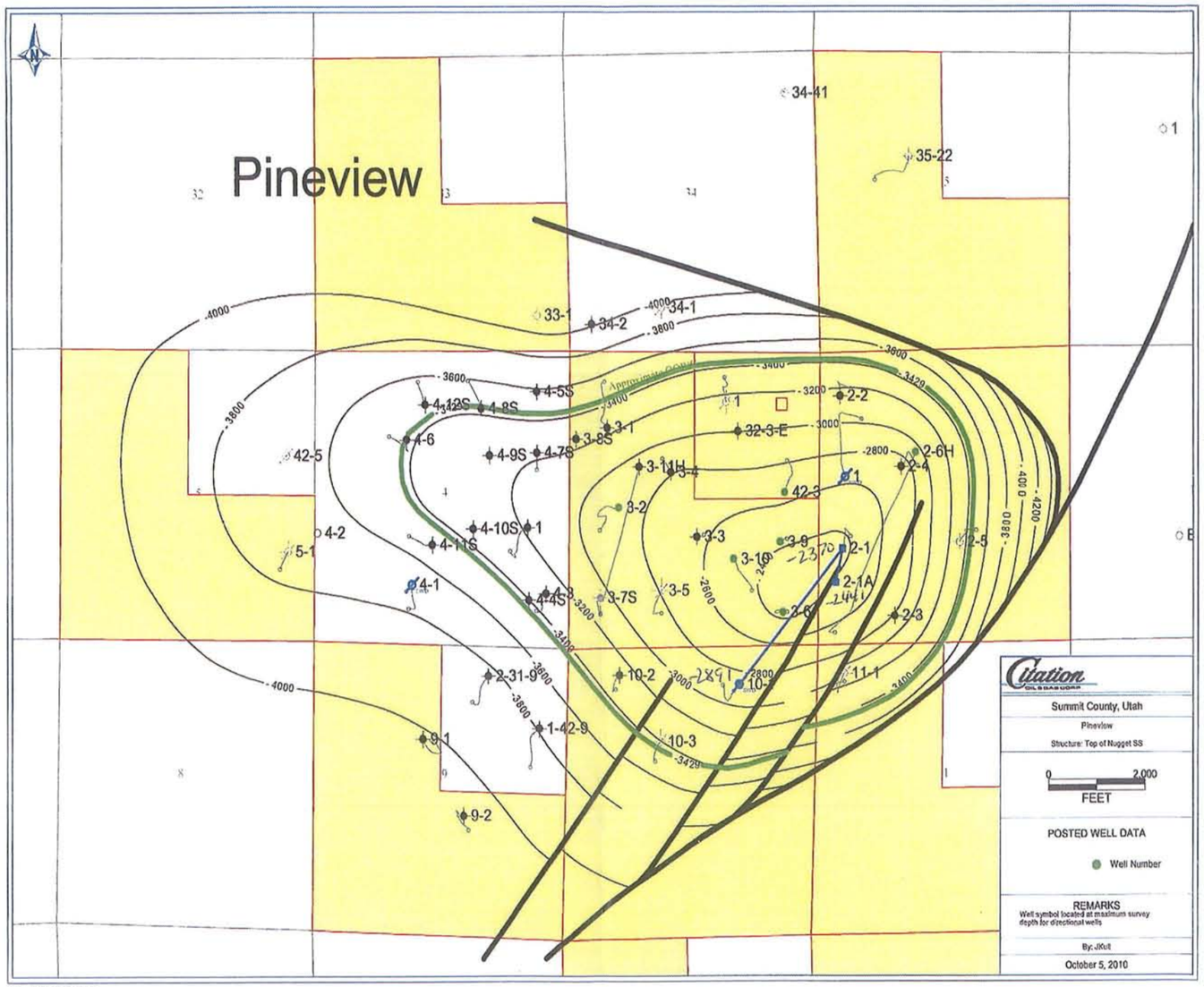

PETRA 10/5/2010 9:07:12 AM

Form OGC-1b

SUBMIT IN TRIPLICATE*
(Other instructions on reverse side)

STATE OF UTAH
DEPARTMENT OF NATURAL RESOURCES
DIVISION OF OIL, GAS, AND MINING

SUNDRY NOTICES AND REPORTS ON WELLS

(Do not use this form for proposals to drill or to deepen or plug back to a different reservoir. Use "APPLICATION FOR PERMIT—" for such proposals.)

1. OIL WELL [X] GAS WELL [ ] OTHER

2. NAME OF OPERATOR: American Quasar Petroleum Co.

3. ADDRESS OF OPERATOR: 1700 Broadway #707, Denver, CO 80290

4. LOCATION OF WELL (Report location clearly and in accordance with any State requirements.* See also space 17 below.) At surface: 682' FNL, 3279' FWL (NW NE)

5. LEASE DESIGNATION AND SERIAL NO.: Fee

6. IF INDIAN, ALLOTTEE OR TRIBE NAME:

7. UNIT AGREEMENT NAME:

8. FARM OR LEASE NAME: Bingham

9. WELL NO.: 10-1

10. FIELD AND POOL, OR WILDCAT: Pineview-Nugget

11. SEC., T., R., M., OR BLK. AND SURVEY OR AREA: Sec 10, T2N-R7E

14. PERMIT NO.: 43-043-30025

15. ELEVATIONS (Show whether DF, RT, GR, etc.): 6761' GR

12. COUNTY OR PARISH: Summit

13. STATE: Utah

16. **Check Appropriate Box To Indicate Nature of Notice, Report, or Other Data**

NOTICE OF INTENTION TO:				SUBSEQUENT REPORT OF:			
TEST WATER SHUT-OFF	[ ]	PULL OR ALTER CASING	[ ]	WATER SHUT-OFF	[ ]	REPAIRING WELL	[ ]
FRACTURE TREAT	[ ]	MULTIPLE COMPLETE	[ ]	FRACTURE TREATMENT	[ ]	ALTERING CASING	[ ]
SHOOT OR ACIDIZE	[ ]	ABANDON*	[ ]	SHOOTING OR ACIDIZING	[ ]	ABANDONMENT*	[ ]
REPAIR WELL	[ ]	CHANGE PLANS	[ ]	(Other) Well status			[XX]
(Other)			[ ]	(NOTE: Report results of multiple completion on Well Completion or Recompletion Report and Log form.)			

17. DESCRIBE PROPOSED OR COMPLETED OPERATIONS (Clearly state all pertinent details, and give pertinent dates, including estimated date of starting any proposed work. If well is directionally drilled, give subsurface locations and measured and true vertical depths for all markers and zones pertinent to this work.)*

Ran 4 1/2" liner patch from 7346-9806'.
Cemented old Nugget & Twin Creek perfs with 780 sx cmt.
Peferf Twn Creek 9469-9316'.
August 24, 1978, well P&A.
Well producing in Twin Creek 9469-9316'.

RECEIVED
AUG 27 1984
DIVISION OF OIL
GAS & MINING

18. I hereby certify that the foregoing is true and correct

SIGNED John D. Dolan TITLE Div. Prod. Mgr. DATE 8/21/84

(This space for Federal or State office use)

APPROVED BY _____ TITLE _____ DATE _____

CONDITIONS OF APPROVAL, IF ANY:

*See Instructions on Reverse Side

A - Well Head

B - Flat Circulating tank -

C - Ford P.U NC-6160 Utah

D - Dog house
parts house

E - Workover rig -

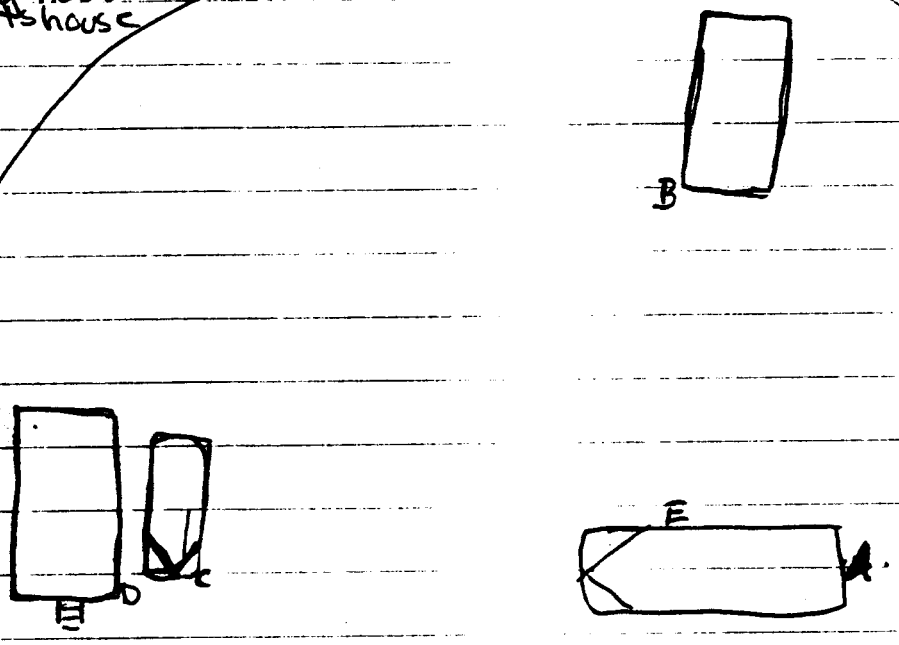

Approx
0740 Am.
11-12-86.

A - RP well head

A-B - 67.7

A-C 85.3

A D - 97.6

Form OGC-1b

SUBMIT IN TRIPLICATE*
(Other instructions on reverse side)

STATE OF UTAH
DEPARTMENT OF NATURAL RESOURCES
DIVISION OF OIL, GAS, AND MINING

14
2

SUNDRY NOTICES AND REPORTS ON WELLS

(Do not use this form for proposals to drill or to deepen or plug back to a different reservoir. Use "APPLICATION FOR PERMIT—" for such proposals.)

1. OIL WELL [X] GAS WELL [ ] OTHER

2. NAME OF OPERATOR: Champlin Petroleum Company

3. ADDRESS OF OPERATOR: PO Box 700, Rock Springs, Wyoming 82902

4. LOCATION OF WELL (Report location clearly and in accordance with any State requirements.* See also space 17 below.) At surface

RECEIVED
APR 26 1985
DIVISION OF OIL GAS & MINING

5. LEASE DESIGNATION AND SERIAL NO.

6. IF INDIAN, ALLOTTEE OR TRIBE NAME

7. UNIT AGREEMENT NAME

8. FARM OR LEASE NAME

9. WELL NO.: 10-1

10. FIELD AND POOL, OR WILDCAT: Pineview

11. SEC., T., R., M., OR BLK. AND SURVEY OR AREA: Sec 10 2N 7E

14. PERMIT NO.

15. ELEVATIONS (Show whether DF, RT, GR, etc.)

12. COUNTY OR PARISH: Summit

13. STATE: Utah

16. Check Appropriate Box To Indicate Nature of Notice, Report, or Other Data

NOTICE OF INTENTION TO:				SUBSEQUENT REPORT OF:			
TEST WATER SHUT-OFF	[ ]	PULL OR ALTER CASING	[ ]	WATER SHUT-OFF	[ ]	REPAIRING WELL	[ ]
FRACTURE TREAT	[ ]	MULTIPLE COMPLETE	[ ]	FRACTURE TREATMENT	[ ]	ALTERING CASING	[ ]
SHOOT OR ACIDIZE	[ ]	ABANDON*	[ ]	SHOOTING OR ACIDIZING	[ ]	ABANDONMENT*	[ ]
REPAIR WELL	[ ]	CHANGE PLANS	[ ]	(Other) Change of Operator			[X]
(Other)			[ ]	(NOTE: Report results of multiple completion on Well Completion or Recompletion Report and Log form.)			

17. DESCRIBE PROPOSED OR COMPLETED OPERATIONS (Clearly state all pertinent details, and give pertinent dates, including estimated date of starting any proposed work. If well is directionally drilled, give subsurface locations and measured and true vertical depths for all markers and zones pertinent to this work.)*

Effective April 1, 1985, Champlin Petroleum Company will assume operation of the Pineview Field, Summit County, Utah from American Quasar Petroleum Company. All further correspondence should be addressed to: Champlin Petroleum Company, P.O. Box 700, Rock Springs, Wyoming 82902.

The following wells are included in the Pineview Field, Summit County, Utah.

43-043 API	WELLS	LOCATION	43-043 API	WELLS	LOCATION
30026	Bingham 2-1	NW/4 SW/4 Sec 2, T2N, R7E	30031	UPRR 3-4	SE NW, Sec 3, T2N, R7E
30125	Bingham 2-1A	SW SW Sec 2, T2N, R7E	30035	UPRR 3-5 (WATER INJ)	SE SW, Sec 3, T2N, R7E
30028	Bingham 2-2	NW NW, Sec 2, T2N, R7E	30036	UPRR 3-6	SE SE, Sec 3, T2N, R7E
30033	Bingham 2-3	SE SW, Sec 2, T2N, R7E		Pineview 3-7 (TA)	SW SW, Sec 3, T2N, R7E
30038	Bingham 2-4	SE NW, Sec 2, T2N, R7E	30120	UPRR 3-8	SW NW, Sec 3, T2N, R7E
	Bingham 2-5 (TA)	NW SE, Sec 2, T2N, R7E	30151	UPRR 3-9	NE SE, Sec 3, T2N, R7E
30025	Bingham 10-1	NW NE, Sec 10, T2N, R7E		Newton Sheep #1	NE SE, Sec 4, T2N, R7E
30016	Bingham 10-2	NW NW, Sec 10, T2N, R7E		Clark 4-1 (TA)	SE SW, Sec 4, T2N, R7E
30097	Bingham 10-3 (water INJ)	SE NW, Sec 10, T2N, R7E	30077	Pineview 4-3	SE SE, Sec 4, T2N, R7E
30012	UPRR 3-1	NW/4 NW/4, Sec 3, T2N, R7E	30083	Pineview 4-4	SE SE, Sec 4, T2N, R7E
30015	UPRR 3-2	NW SW, Sec 3, T2N, R7E	30103	Newton Sheep 4-5	NE NE, Sec 4, T2N, R7E
30019	UPRR 3-3	NW/SE, Sec 3, T2N, R7E			

CONTINUES PAGE 2

18. I hereby certify that the foregoing is true and correct

SIGNED S.M. Schram TITLE Production Superintendent DATE March 27, 1985

(This space for Federal or State office use)

APPROVED BY _____ TITLE _____ DATE _____

CONDITIONS OF APPROVAL, IF ANY:

*See Instructions on Reverse Side

2N, 7E, 10

SUMMIT COUNTY SHERIFF

P.O. Box 328
COALVILLE, UTAH 84017

UT022000 Summit County Sheriff's Department Case #: 8611-1499

Complainant: John L. Berrier
DOB: 6/4/28
Rt. 1, Box 123
Coalville, Utah 84017
Home Phone: 336-2910
Work Phone: 336-5668 Champlin

Location of Incident: 18 miles East of Coalville Champlin Gas Plant
Chalk Creek, Coalville, Utah
Well # 10-1 Bingham

Time of Incident: Approximately 0740 hours 11/12/86
Time Incident Reported: 0751 hours 11/12/86

Type of Incident: Occupational Injury Accident

Employer to Injured Parties: Prairie Gold Well Service
Roosevelt, Utah
Phone: 722-4545/4549
(Steve Hamilton, Pusher)

Victims:

1- Steve R. Hamilton
Date of Birth: 1/29/60, 26 years of age
P.O. Box 751
Coalville, Utah 84017
336-2509

2- Ray Gene Hollander
Date of Birth: 3/31/59, 27 years of age
P.O. Box 62
Coalville, Utah 84017
336-2152

3- Dean Schulte
Date of Birth: 2/16/66, 20 years of age
P.O. Box 643
Coalville, Utah 84017
336-2861

4- Randy R. Zech
Date of Birth: 8/16/58, 28 years of age
102 Col. Estates
Evanston, Wyoming 82930
307-789-6356

Notes; Names Released 1500 hours

EMS# 353568 #2
EMS# 353569 #1
EMS# 353570 #3
EMS# 353571 #4

Called Claudia Rettman 1445 hours
Secretary for Prairie Gold, Families were notified of injuries

President Priarie Gold: Jack Shearer

Officer's Narrative:

This officer received information from Summit County, Dispatcher Kathy Martinez of four persons being burned and a need for Fire Department notification at 0751 11/12/86.

0808 hours, This officer arrived at Champlin plant met by John Berrier who had two of the most serious injured persons inside his Chev. Blazer, at Champlin plant office.

The two other injured persons were taken to the Champlin Plant office by another Champlin employee.

This officer assisted North Summit Ambulance crew in loading injured parties into the ambulance prior to observing the accident scene.

This officer arrived at the accident scene at approximately 0815 hours, this officer observed North Summit Fire Department pump foam on a flat tank and being assisted by Champlin employees' who had there fire trailer at the scene.

No flames were showing when this officer arrived. (See diagram of location of items on locaton of fire. There is a pickup on the location which appears to be a total loss.

Utah Plate: NC-6160

1983 Ford Pickup Gray in color

Vin #: 1FTHX25G3DKA01752

Prairie Gold Well Service

Roosevelt, Utah 84066

722-04549

This officer received a short statement at Champlin office, Steve Hamilton stated they were removing gas and stuff from the well. Steve stated he told one person to shut off the propane in the doghouse and at that point the fire started.

This officer has no information as to where all four suspect were located at the time the fire started.

Steve stated he was blown out of the door of the dog house.

Steve stated two of the persons injured ran and he had to take one down in the snow to put the fire out that was on his person. Steve was in a poor state of mind and no futher questions were asked.

Lieutenant Louis Stevens

Summit County Sheriff's Department

Louis L. Stevens

Date Typed: 11/13/86

Typed by: Linda J. Smith

* None of workover rig hands smoked.

UTAH NATURAL RESOURCES
Oil, Gas & Mining

355 West North Temple, 3 Triad Center, Suite 350, Salt Lake City, Ut 84180-1203. (801-538-5340)

MONTHLY OIL AND GAS PRODUCTION REPORT

Operator name and address:

CHAMPLIN PETROLEUM CO.
P O BOX 700
ROCK SPRINGS WY 82902
ATTN: BETTY OLSON

Utah Account No. N0200

Report Period (Month/Year) 5 / 87

Amended Report ☐

Well Name API Number	Entity	Location	Producing Zone	Days Oper	Production Volume Oil (BBL)	Gas (MSCF)	Water (BBL)
BINGHAM 2-4 4304330038	02190	02N 07E 2	NGSD				
BINGHAM 10-1 4304330025	02195	02N 07E 10	TWNCR				
PINEVIEW 4-3 4304330077	02210	02N 07E 4	TWNCR				
PINEVIEW 4-4S 4304330083	02215	02N 07E 4	FRTR				
NEWTON SHEEP 4-10S 4304330133	02220	02N 07E 4	STUMP				
CLARK 4-1 4304330071	02225	02N 07E 4	STUMP				
NEWTON SHEEP 4-11S 4304330239	02226	02N 07E 4	STUMP				
UPRR 3-4 4304330031		02N 7E 3	TA'd				
		TOTAL					

Comments (attach separate sheet if necessary)

I have reviewed this report and certify the information to be accurate and complete. Date

Authorized signature Telephone

PLEASE COMPLETE FORMS IN BLACK INK

champlin

A Subsidiary of
Union Pacific Corporation

May 29, 1987

RECEIVED
JUN 01 1987
DIVISION OF
OIL, GAS & MINING

060817

Department of Natural Resources
Division of Oil, Gas & Mining
State of Utah
355 North Temple
3 Triad Center, Suite 350
Salt Lake City, Utah 84180

Re: Bond Nos. 951566 and 2447222

Gentlemen:

As of May 1, 1987, Champlin Petroleum Company was reorganized and its name was changed to Union Pacific Resources Company. Attached herewith you will find a copy of the following:

1 - "Bond Rider" reflecting the name change.

2 - Certificate of Amendment and Acknowledgement, State of Delaware.

If you should have any questions, please do not hesitate to contact the undersigned.

Sincerely,

Ed Robert

Edward Robert
Insurance Coordinator

ER:vp-9

Attachment

Champlin Petroleum Company
P.O. Box 7
Fort Worth, Texas 76101-0007
817/877-6000

43-043-30016
approximately ½ mile west of Bingham 10-1

Division of Oil, Gas and Mining
PHONE CONVERSATION DOCUMENTATION FORM

Route original/copy to:
[✓] Well File Bingham #10-2
(Location) Sec 10 Twp 2N Rng 7E
(API No.) 43-043-30016

[] Suspense
(Return Date) _____
(To - Initials) _____

[] Other

1. Date of Phone Call: 12-6-89 Time: 9:00 am

2. DOGM Employee (name) John Baza (Initiated Call [])
Talked to:
Name Ted Brown (Initiated Call [✓]) - Phone No. ( )
of (Company/Organization) UPRC

3. Topic of Conversation: Problems w/ workover on well. Wants to plug.

4. Highlights of Conversation: Modify program: (1) Want to set CICR above stump & pump approx. 100 sx cement. Attempt to get squeeze pressure.
(2) Will monitor bradenhead for pressure and/or flow.
(3) Squeeze bradenhead from surface w/ 50 sx cement.

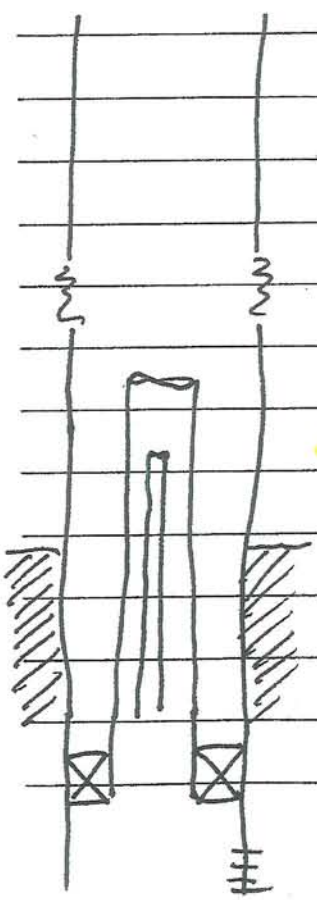

Stump top @ 6262'
Casing damage @ 6278'
Stuck tubing @ 6307'
Stuck rods @ 6337'
Cement top @ 7006'
Tbg. set @ 8000'
Wasatch Canyon perfs @ 9510' - 9952'

Probably begin work on Friday.

Norman H. Bangerter
Governor
Dee C. Hansen
Executive Director
Dianne R. Nielson, Ph.D.
Division Director

State of Utah

DEPARTMENT OF NATURAL RESOURCES
DIVISION OF OIL, GAS AND MINING

355 West North Temple
3 Triad Center, Suite 350
Salt Lake City, Utah 84180-1203
801-538-5340

May 23, 1990

Mr. Ted Brown
Union Pacific Resourcesc Company
P.O. Box 7
Fort Worth, Texas 76101-0007

Dear Mr. Brown:

Re: Commingling Well Production into Common Production Facilities

The Division of Oil, Gas and Mining has received and reviewed your letter dated May 1, 1990, requesting approval to commingle well production from all wells in Sections 2, 3, and 10, Township 2 North, Range 7 East into common production facilities.

The Division accepts the procedure for commingling production as outlined in your letter. You should be aware that allocation of production revenue interest shall remain a contractual matter between Union Pacific Resources Company and the various working interest and royalty interest owners of the wells. The Division's acceptance of the stated commingling procedures does not constitute approval to modify any established agreements among the owners of the wells, and notification of changes in the methods of measurement or allocation of production to the various owners shall be the responsibility of your company as operator.

In your letter, you indicate that production from individual wells involved in the commingling will be tested monthly and production allocations will be based on such tests. Such testing is considered a stipulation of the Division's acceptance of your procedure, and proper measurement and allocation for individual wells will be an item for verification in any future audits performed on these wells by Division staff.

The Division appreciates your attention to this matter. If you have any additional questions or concerns, please do not hesitate to contact me.

Sincerely,

John R. Baza

John R. Baza
Petroleum Engineer

cc: D. R. Nielson
R. J. Firth
S. L. Schneider
Well files

OI2/293

an equal opportunity employer

ORM 10

STATE OF UTAH
DIVISION OF OIL, GAS AND MINING
1594 West North Temple, Suite 1210, PO Box 145801, Salt Lake City, UT 84114-5801

MONTHLY OIL AND GAS PRODUCTION REPORT

OPERATOR NAME AND ADDRESS:

RON REAMES
UNION PACIFIC RESOURCES CO
PO BOX 7
FORT WORTH TX 76101-0007

UTAH ACCOUNT NUMBER: N9465

REPORT PERIOD (MONTH/YEAR): 12 / 98

AMENDED REPORT ☐ **(Highlight Changes)**

Well Name / API Number	Entity	Location	Producing Zone	Well Status	Days Oper	Production Volumes OIL(BBL)	GAS(MCF)	WATER(BBL)
BINGHAM 1-42-3 (2-7) 4304330029	00460	02N 07E 3	NGSD			fee		
JUDD 34-3 4304330098	02070	02N 06E 34	NGSD			fee (SOW)		
JUDD 34-1 4304330061	02075	02N 06E 34	NGSD			fee (SOW)		
UPRR 3-1 4304330012	02080	02N 07E 3	STUMP			fee (SOW)		
UPRR 3-2 4304330015	02085	02N 07E 3	NGSD			fee (SOW)		
UPRR 3-6 4304330036	02105	02N 07E 3	TWCNG			fee (POW)		
UPRR 3-9 4304330151	02115	02N 07E 3	TWNCR			fee (POW)		
BINGHAM 2-1 4304330026	02170	02N 07E 2	NGSD			fee (POW)		
BINGHAM 2-1A 4304330125	02175	02N 07E 2	NGSD			fee (POW)		
BINGHAM 2-2 4304330028	02180	02N 07E 2	TWNCR			fee (TA)		
BINGHAM 2-3 4304330033	02185	02N 07E 2	NGSD			fee (SOW)		
BINGHAM 2-4 4304330038	02190	02N 07E 2	NGSD			fee (SOW)		
BINGHAM 10-1 4304330025	02195	02N 07E 10	TWNCR			fee (SOW)		
					TOTALS			

MENTS:

y certify that this report is true and complete to the best of my knowledge. Date:

and Signature: Telephone Number:

3)

FORM 9

STATE OF UTAH
DIVISION OF OIL, GAS AND MINING

5. Lease Designation and Serial No.: Fee

SUNDRY NOTICES AND REPORTS ON WELLS

Do not use this form for proposals to drill new wells, deepen existing wells, or to reenter plugged and abandoned wells. Use APPLICATION FOR PERMIT TO DRILL OR DEEPEN form for such proposals

6. If Indian, Allotee or Tribe Name: NA

7. Unit Agreement Name: NA

1. Type of Well: OIL (X) GAS ( ) OTHER: ( ) INJ. ( )

8. Well Name and Number: Bingham 10-1

9. API Well Number: 43-043-30025

2. Name of Operator: Union Pacific Resources Company

10. Field and Pool, or Wildcat: Pineview

3. Address and Telephone Number: P. O. Box 7 MS 29-3006-01 Fort Worth, Texas 76101-0007
Telephone (817) 321-6739

4. Location of Well
Footages: 682' FNL, 3279' FWL
QQ, Sec., T., R., M.: (NWNE) Sec.10, T2N-R7E
County: Summit
State: Utah

11. CHECK APPROPRIATE BOXES TO INDICATE NATURE OF NOTICE, REPORT, OR OTHER DATA

NOTICE OF INTENT (Submit in Duplicate)

( ) Abandonment
( ) Casing Repair
( ) Change of Plans
( ) Conversion to Injection
( ) Fracture Test
( ) Multiple Completion
( ) New Construction
( ) Pull or Alter Casing
( ) Recompletion
( ) Shoot or Acidize
( ) Vent or Flare
( ) Water Shutoff
(X) Other: **Change of Operator**

Approximate date work will start: Upon Approval

SUBSEQUENT REPORT (Submit Original Form Only)

( ) Abandonment *
( ) Casing Repair
( ) Change of Plans
( ) Conversion to Injection
( ) Fracture Treat
( ) Other_____
( ) New Construction
( ) Pull or Alter Casing
( ) Shoot of Acidize
( ) Vent or Flare
( ) Water Shut-Off Shutoff

Date of work completion_____

Report results of Multiple Completions and Reclamations to different reservoirs on WELL COMPLETION OR RECOMPLETION AND LOG form.
* Must be accompanied by a cement verification report.

12. DESCRIBE PROPOSED OR COMPLETED OPERATIONS (Clearly state all pertinent details, and give pertinent dates. If well is directionally drilled, give subsurface locations and measured and true vertical depths for all markers and zones pertinent to this work).

Union Pacific Resources Company has sold the captioned well to Citation Oil & Gas Corp. P. O. Box 690688, Houston, Texas 77269-0688 and requests that Citation be named Operator of Record effective January 1, 1999. Please release this well from coverage under Union Pacific Resources Company's Utah Statewide Bond #2447222.

On behalf of Union Pacific Resources Company I hereby certify that the foregoing is true and correct:

Dorothy Moravek D Moravek Title: Regulatory Analyst Date 12-18-98

By execution of this document, Citation Oil & Gas Corp. requests the State of Utah to approve it as Operator of Record for the above captioned well. Citation accepts responsibility for this well under it's Utah Statewide Bond #587800.

13. On behalf of Citation Oil & Gas Corp. I hereby certify that the foregoing is true and correct:

Robert T. Kennedy Robert T. Kennedy Title: Vice President-Land Date: 12-22-98

(This space for State use only)

RECEIVED
DEC 24 1998
DIV. OF OIL, GAS & MINING

(12/92)

43-043-30317

DIVISION OF OIL, GAS AND MINING

APPLICATION FOR PERMIT TO DRILL
STATEMENT OF BASIS

Operator: UPRC
Well Name & Number: Bingham 2-6 H
API Number: 43- 043-30317
Location: 1/4,1/4 SE/NW ? SW/SW ? Sec. 2 T. 2 N. R. 7 E.

Geology/Ground Water:

High quality ground water may be encountered in the Wasatch Formation and down through all formations to the Stump Formation. A proposal was made in the APD to set surface casing at 2000 feet which is in the Wasatch Formation. UPRC was contacted and advised to extend surface casing through the Echo canyon conglomerate to the top of the Kelvin. Casing set through the conglomerate will assure protection of any water encountered. The intermediate and production casing and cement program will adequately protect any water zones encountered.

Reviewer: Daniel J. Jarvis Date: 12/9/96

Surface:

An onsite evaluation was done for the proposed well on 11/27/96. Representatives from DOGM, and UPRC were present. Bobby Cooper of UPRC said that the landowner, Mr. Earl Bingham had already been to the location with him and had agreed to the siting of the location. UPRC has an agreement with Mr. Bingham and will be sending the affidavit stating that they have the agreement. The reserve pit ranking for this location is 55. Which places it as a Level I sensitivity so a 14 mil liner will be required. The location sits in the middle of a canyon with a drainage running through the middle of it. The drainage will be diverted around both sides of the location. A steep cut will be required on the east side of location. It was discussed that seeding and stabilization efforts will commence as soon as practical. Numerous springs are located on the hillside above the location. UPRC will construct the location in a manner that the springs will not be disturbed. It is recommended that this application be approved.

Reviewer: D. Jarvis Date: 12/9/96

State of Utah
DEPARTMENT OF NATURAL RESOURCES
DIVISION OF OIL, GAS AND MINING

Michael O. Leavitt
Governor
Ted Stewart
Executive Director
Lowell P. Braxton
Division Director

1594 West North Temple, Suite 1210
PO Box 145801
Salt Lake City, Utah 84114-5801
801-538-5340
801-359-3940 (Fax)
801-538-7223 (TDD)

January 27, 1999

Union Pacific Resources Company
Attn: Dorothy Moravek
P.O. Box 7 MS 29-3006-01
Fort Worth, Texas 76101-0007

Re: Notification of Sale or Transfer of Fee Lease Interest

The Division has received notification of a change of operator from Union Pacific Resources Co. to Citation Oil & Gas Corporation for the following well(s) which are located on a fee lease:

Well Name	Sec.-T.-R.	API Number
Bingham 1-43-3	03-02N-07E	43-043-30029
Judd 34-3	34-02N-06E	43-043-30098
Judd 34-1	34-02N-06E	43-043-30061
UPRR 3-1	03-02N-07E	43-043-30012
UPRR 3-2	03-02N-07E	43-043-30015
UPRR 3-6	03-02N-07E	43-043-30036
UPRR 3-9	03-02N-07E	43-043-30151
Bingham 2-1	02-02N-07E	43-043-30026
Bingham 2-1A	02-02N-07E	43-043-30125
Bingham 2-2	02-02N-07E	43-043-30028
Bingham 2-3	02-02N-07E	43-043-30033
Bingham 2-4	02-02N-07E	43-043-30038
Bingham 10-1	10-02N-07E	43-043-30025
Pineview 4-3	04-02N-07E	43-043-30077
Pineview 4-4S	04-02N-07E	43-043-30083
Blonquist 26-3	26-02N-06E	43-043-30235
Newton Sheep 1	18-02N-07E	43-043-30284
UPRR 1H 19-2X	19-02N-07E	43-043-30300
Judd 34-1H	34-02N-06E	43-043-30301
UPRR 3-10	03-02N-07E	43-043-30302
UPRR 17-2H	17-02N-07E	43-043-30304

Well Name	Sec.-T.-R.	API Number
UPRR 35-2H	35-02N-06E	43-043-30305
Newton Sheep 20-1H	20-02N-07E	43-043-30310
Judd 4-1H	04-01N-06E	43-043-30311
Blonquist 26-1H	26-02N-06E	43-043-30314
Bingham 2-6H	02-02N-07E	43-043-30317
UPR 3-11H	03-02N-07E	43-043-30318
Blonquist 26-4	26-02N-06E	43-043-30268
UPRC 33-1	33-02N-06E	43-043-30233
Clark 4-1	04-02N-07E	43-043-30071
UPRC 1	17-02N-07E	43-043-30290
B.A. Bingham & Sons 1	02-02N-07E	43-043-30295

Utah Administrative Rule R649-2-10 states; the owner of a lease shall provide notification to any person with an interest in such lease, when all or part of that interest in the lease is sold or transferred.

This letter is written to advise Union Pacific Resources Co. of its responsibility to notify all individuals with an interest in this lease (royalty interest and working interest) of the change of operator. Please provide written documentation of this notification to:

Utah Royalty Owners Association
Box 1292
Roosevelt, Utah 84066

Your assistance in this matter is appreciated.

Sincerely,

Kristen D. Risbeck

Kristen D. Risbeck

cc: Citation Oil & Gas Corporation
Utah Royalty Owners Association, Kent Stringham
John R. Baza, Associate Director
Operator File(s)

Citation
OIL & GAS CORP.

March 29, 1999

Kristen Risbeck
State of Utah
P O Box 145801
Salt Lake City, Utah 84114-5801

Re: Transfer of Authority to Inject

Dear Ms. Risbeck:

Enclosed please find an original and one copy of the form 5 to transfer the following wells into Citation Oil & Gas Corp.'s name.

UPRC 33-1 SWD	43-043-30233
Blonquist 26-4 SWD	43-043-30268
Clark 4-1 SWD	43-043-30071
Exxon UPRC #1 SWD	43-043-30290
B. A. Bingham & Sons Inc. #1	43-043-30295

If you have any questions regarding this form, please contact the undersigned at 281-469-9664. Thank you.

Sincerely,

Sharon Ward

Sharon Ward
Regulatory Administrator

Cc: Dorothy Moravek
UPRC

RECEIVED
APR - 2 1999
DIV. OF OIL, GAS & MINING

P.O. Box 690688 • Houston, TX 77269-0688 • 281/469-9664

Division of Oil, Gas and Mining

OPERATOR CHANGE WORKSHEET

Routing:

1-KDR ✓	6-KAS ✓
2-~~CLH~~ ✓	7-SJ
3-JRB ✓	8-FILE
4-CDW ✓	
5-KDR ✓	

Attach all documentation received by the division regarding this change.
Initial each listed item when completed. Write N/A if item is not applicable.

☒ Change of Operator (well sold) ☐ Designation of Agent
☐ Designation of Operator ☐ Operator Name Change Only

The operator of the well(s) listed below has changed, **effective:** 1-1-99

TO: (new operator) CITATION OIL & GAS CORP
(address) P.O. BOX 690688
HOUSTON, TX 77269-0688
RUTH ANN ALFORD
Phone: (281)469-9664
Account no. N0265

FROM: (old operator) UNION PACIFIC RESOURCES CO
(address) P.O. BOX 7 MS 29-3006-01
FORT WORTH, TX 76101-0007
DOROTHY MORAVEK
Phone: (817)321-6739
Account no. N9465

WELL(S) attach additional page if needed:

Name:	API:	Entity:	S	T	R	Lease:
SEE ATTACHED	43-043-30025					

OPERATOR CHANGE DOCUMENTATION

KDR 1. (r649-8-10) Sundry or other legal documentation has been received from the **FORMER** operator (attach to this form). (Rec'd 12-24-98)

KDR 2. (r649-8-10) Sundry or other legal documentation has been received from the **NEW** operator (Attach to this form). (Rec'd 12-24-98)

N/A 3. The **Department of Commerce** has been contacted if the new operator above is not currently operating any wells in Utah. Is the company **registered with the state?** (yes/no) _____ If yes, show company file number: _____.

N/A 4. **FOR INDIAN AND FEDERAL WELLS ONLY.** The BLM has been contacted regarding this change. Make note of BLM status in comments section of this form. BLM approval of **Federal** and **Indian** well operator changes should ordinarily take place prior to the division's approval, and before the completion of **steps 5 through 9** below.

KDR 5. Changes have been entered in the **Oil and Gas Information System** (3270) for each well listed above. (3-11-99)

KDR 6. **Cardex** file has been updated for each well listed above.

N/A 7. Well **file labels** have been updated for each well listed above. (*new filing system)

KDR 8. Changes have been included on the monthly "Operator, Address, and Account Changes" **memo** for distribution to Trust Lands, Sovereign Lands, UGS, Tax Commission, etc. (3-11-99)

KDR 9. A folder has been set up for the **Operator Change file**, and a copy of this page has been placed there for reference during routing and processing of the original documents.

c:\dons\wpdocs\forms\operchng

- OVER -

OPERATOR CHANGE WORKSHEET (cont' 'd) - Initial each item when completed. Write N/A if item is not applicable.

ENTITY REVIEW

KDR 1. (r649-8-7) **Entity assignments have been reviewed** for all wells listed above. Were entity changes made? (yes/no) NO If entity assignments were changed, attach copies of Form 6, Entity Action Form.

KDR 2. Trust Lands, Sovereign Lands, Tax Commission, etc., have been **notified** through normal procedures of entity changes.

BOND VERIFICATION - (FEE WELLS ONLY)

KDR 1. (r649-3-1) The **NEW** operator of any fee lease well listed above has furnished a proper bond. (Rec'd 2.11.99 Bond # RSB-6705165)

KDR 2. A **copy of this form** has been placed in the new and former operator's bond files.

KDR 3. The **FORMER** operator has requested a release of liability from their bond (yes/no) YES, as of today's date _____. If yes, division response was made to this request by letter dated 3.10.99.

LEASE INTEREST OWNER NOTIFICATION OF RESPONSIBILITY

N/A 1. Copies of documents have been sent on _____ to _____ at Trust Lands for changes involving State leases, in order to remind that agency of their responsibility to review for proper bonding.

KDR 2. (r649-2-10) The former operator of any fee lease wells listed above has been contacted and informed by letter dated 1.27.99 19 __, of their responsibility to notify all interest owners of this change.

FILMING

YES 1. All attachments to this form have been **microfilmed**. Today's date: 5.12.99.

FILING

__ 1. **Copies** of all attachments to this form have been filed in each **well file**.

__ 2. The **original of this form**, and the **original attachments** are now being filed in the Operator Change file.

COMMENTS

_____

Well File
043-30025

State of Utah

Department of
Natural Resources

Division of
Oil, Gas & Mining

ROBERT L. MORGAN
Executive Director

LOWELL P. BRAXTON
Division Director

MICHAEL O. LEAVITT
Governor

OLENE S. WALKER
Lieutenant Governor

January 22, 2004

CERTIFIED MAIL # 7002 0510 0003 8602 4781

Sharon Ward
Citation Oil & Gas Corp.
P.O. Box 690688
Houston, TX 77269-0688

Re: Extended Shut-in and Temporary Abandoned Well Requirements for Fee or State Leases.

Dear Ms. Ward:

Citation Oil & Gas Corp., as of January 2004, has two (2) State Lease Wells and fifteen (15) Fee Lease Wells (see attachment A) that are currently in non-compliance for extended shut-in or temporary abandonment status. Wells SI/TA beyond twelve (12) consecutive months requires filing a Sundry Notice (R649-3-36-1). Wells with five (5) years non-activity or non-productivity shall be plugged, unless the Division grants approval for extended shut-in time upon a showing of good cause by the operator (649-3-36-1.3.3). For extended SI/TA consideration the operator shall provide the Utah Division of Oil, Gas & Mining with the following:

1. Reasons for SI/TA of the well (R649-3-36-1.1).
2. The length of time the well is expected to be SI/TA (R649-3-36-1.2), and
3. An explanation and supporting data if necessary, for showing the well has integrity, meaning that the casing, cement, equipment condition, static fluid level, pressure, existence or absence of Underground Sources of Drinking Water and other factors do not make the well a risk to public health and safety or the environment (R649-3-36-1.3).

1594 West North Temple, Suite 1210, PO Box 145801, Salt Lake City, UT 84114-5801
telephone (801) 538-5340 • facsimile (801) 359-3940 • TTY (801) 538-7223 • *www.ogm.utah.gov*

Utah!
Where ideas connect

Submitting the information suggested below may help show well integrity and may help qualify your well for extended SI/TA. **Note: As of July 1, 2003, wells in violation of the SI/TA rule R649-3-36 may be subject to full cost bonding (R649-3-1-4.2, 4.3).**

1. Wellbore diagram, and
2. Copy of recent casing pressure test, and
3. Current pressures on the wellbore (tubing pressure, casing pressure, and casing/casing annuli pressure) showing wellbore has integrity, and
4. Fluid level in the wellbore, and
5. An explanation of how the submitted information proves integrity.

If the required information is not received within 30 days of the date of this notice, further actions may be initiated. If you have any questions concerning this matter, please contact me at (801) 538-5281.

Sincerely,

Dustin K. Doucet
Petroleum Engineer

jc
cc: John Baza
Well File
Sitla

	Well Name	API	Lease Type	Years Inactive
1	Walker Hollow U 58	43-047-30912	State	7 Years 7 Months
2	Walker Hollow 44	43-047-30688	State	10 Years 7 Months

1	Elkhorn Watton Cyn U 17-2H	43-043-30304	Fee	2 Years 2 Months
2	UPRR 35-2H	43-043-30305	Fee	4 Years 6 Months
3	Bingham 10-1	43-043-30025	Fee	5 Years 7 Months
4	UPRC 3-11H	43-043-30318	Fee	5 Years 8 Months
5	Blonquist 26-1H	43-043-30314	Fee	6 Years 4 Months
6	Blonquist 26-3	43-043-30235	Fee	6 Years 4 Months
7	Bingham 2-2	43-043-30028	Fee	6 Years 7 Months
8	Elkhorn Watton Cyn U 19-2X	43-043-30300	Fee	6 Years 8 Months
9	Elkhorn Watton Cyn U 18-1	43-043-30284	Fee	7 Years 4 Months
10	Bingham 2-4	43-043-30038	Fee	7 Years 8 Months
11	Bingham 2-3	43-043-30033	Fee	10 Years 7 Months
12	UPRR 3-1	43-043-30012	Fee	10 Years 8 Months
13	Judd 34-1	43-043-30061	Fee	10 Years 9 Months
14	Judd 34-3	43-043-30098	Fee	10 Years 9 Months
15	Pineview 4-4S	43-043-30083	Fee	10 Years 9 Months

Attachment A

FORM 9

STATE OF UTAH

DIVISION OF OIL, GAS AND MINING

5. Lease Designation and Serial Number: **FEE**

6. If Indian, Allottee or Tribe Name:

7. Unit Agreement Name:

SUNDRY NOTICES AND REPORTS ON WELLS

Do not use this form for proposals to drill new wells, deepen existing wells, or to re-enter plugged and abandoned wells. Use APPLICATION FOR PERMIT TO DRILL OR DEEPEN form for such proposals.

1. Type of Well: OIL ☒ GAS ☐ OTHER:

8. Well Name and Number: **Bingham 10-1**

2. Name of Operator: **Citation Oil & Gas Corp.**

9. API Well Number: **43-043-30025**

3. Address and Telephone Number: **P O Box 690688, Houston, Texas 77269 (281) 517-7800**

10. Field and Pool, or Wildcat: **Pineview Twin Creek**

4. Location of Well

Footages: **682 FNL & 3279 FWL** County: **Summit**

QQ, Sec., T., R., M.: **NW NE Sec. 10-2N-7E** State: **Utah**

11. CHECK APPROPRIATE BOXES TO INDICATE NATURE OF NOTICE, REPORT, OR OTHER DATA

NOTICE OF INTENT (Submit in Duplicate)

- ☐ Abandonment
- ☐ Casing Repair
- ☐ Change of Plans
- ☐ Conversion to Injection
- ☐ Fracture Treat
- ☐ Multiple Completion
- ☐ Other
- ☐ New Construction
- ☐ Pull or Alter Casing
- ☐ Recompletion
- ☐ Shoot or Acidize
- ☐ Vent or Flare
- ☐ Water Shut-Off

Approximate date work will start

SUBSEQUENT REPORT (Submit Original Form Only)

- ☐ Abandonment*
- ☐ Casing Repair
- ☐ Change of Plans
- ☐ Conversion to Injection
- ☐ Fracture Treat
- ☐ Other **Hold for use in Pineview Field**
- ☐ New Construction
- ☐ Pull or Alter Casing
- ☐ Shoot or Acidize
- ☐ Vent or Flare
- ☐ Water Shut-Off

Date of work completion

Report results of **Multiple Completions** and **Recompletions** to different reservoirs on WELL COMPLETION OR RECOMPLETION AND LOG form

* Must be accompanied by a cement verification report.

12. DESCRIBE PROPOSED OR COMPLETED OPERATIONS (Clearly state all pertinent details, and give pertinent dates. If well is directionally drilled, give subsurface locations and measured and true vertical depths for all markers and zones pertinent to this work.)

Citation requests permission to retain this wellbore in a shut-in status. Citation is currently evaluating the waterflood at the Elkhorn Field. Based on the results of that study, this well may become useful if we choose to expand the waterflood to include the Pineview and Lodgepole fields. The Casing Pressure = 20 psi, Tubing Pressure = 20 psi, Casing-Casing Annular Pressure = 0 psi, Fluid level 600' from surface.

THIS SUNDRY IS BEING RETURNED; INSUFFICIENT DATA WAS SUBMITTED TO APPROVE THE REQUESTED ACTION (see attached letter).

April 5, 2004

Utah Division of Oil, Gas and Mining

13. Name & Signature: Sharon Ward **Sharon Ward** Title: **Regulatory Administrator** Date: **2/18/04**

(This space for State use only)

COPY SENT TO OPERATOR
Date: 4-8-04
Initials: CHD

(12\92)

(See Instructions on Reverse Side)

RECEIVED
MAR 01 2004
DIV. OF OIL, GAS & MINING

Bingham 10-1 NW NE
Sec. 10, T2N R7E
Abbreviated Well History

Date	Activity
9/2/76	Perfed 9,753'-9,936' OA (Nugget)
9/8/76	Set 7" pkr w/plug @ 9,710'
9/9/76	Dumped 3 sx sand on pkr @ 9,710'. Perfed 9,100'-9,220' (TC).
10/1/76	Perfed 9,300'-9,474' OA (TC)
10/19/76	Landed tbg in pkr @ 9,710'
11/2/76	Installed DUAL
9/78	Nugget producing large wtr volumes. Spinner showed very little oil prod and large wtr vol from below 9,800'. TOOH w/tbg strings. Pkr @ 9,710' was milled and pushed to 9,882'. Set CIBP @ 9,810' and U. Nugget was perfed @ 9,707'-46'. Nugget (9,707'-96') swabbed mostly wtr. SI Nugget string.
9/80	Attempted to pull DUAL to install ESP to produce TC. Dual pkr hung up @ 7,613' while tripping tbg. Tbg was cut off 15' above pkr and a minimum csg ID log was run and hung up @ 8,034' w/ 2 arms pulling loose. The csg was milled out and the dual pkr and tbg were retrieved. A 4 1/2" scab liner was cemented 7,346'-9,806', isolating all Nugget and TC pfs. Perfed Rich 9,300'-9,469' OA.

Status: SI. Perfs 9,300'-9,469' OA, 4 1/2" scab liner 7,346'-9,806', CIBP @ 9,810', milled pkr @ 9,882'.

Preliminary Recommendation: Squeeze 9,300'-9,469' OA.
Then perf Nugget, avoiding tight section at top and below liner bottom (9,806'). Perf 9,752'-67', 9,777'-83' and 9,790'-9,798'. Polymer treatment. Drop pump.

Net matrix pay (9,750'-9,802') = 43'
Avg matrix pay porosity = 11.2%

Production seems to show dominant fracture flow. The log shows a lot of fracturing while the core does not show fracturing from 9,723'-47' (the log does). Drainage from updip wells a concern. Need to determine PB depth.

Notes: Core/log show tight rock from 9,715'-20'. 9/78 spinner survey showed very little oil production and large water volumes from perfs below 9,800'. But subsequent swabbing of 9,707'-96' recovered mostly water. Note that fluid rates were good from Rich zone while producing through scab liner.

Core fractures:
9,710'-12'
9,715'-16'
9,720'-22'

UPRC Acquisition
Bingham 10-1 NW NE
Sec 10, T2N, R7E
Well History

Date	Activity	Status After Activity
6/5/76	Spudded	
7/6/76	Ran DST #1: 7,698'-7,776' (Bottom hole conventional) w/TD @ 7776'. No Flow. Pipe recovery: 20' drlg mud. 1st Flow (10 min.) - Tool opened with surface bubbles and remained thru flow. SI #1: (60 min.) 2nd Flow (120 min.): Tool opened with no blow and remained thru flow. SI #2 (210 min.). (Inside Recorder @ 7703'): IHP=3706#, FHP=3644#, IFP=64#, FIFP=52#, ISIP=644#, 2nd IFP=59#, 2nd FFP=46#, 2nd SIP=2674#. Sampler (2,100 cc) Recovery: 2,100 cc mud	
7/10/76	Ran DST #2: 8350'-8490' (Bottom hole conventional) w/TD @ 8490'. No flow. Pipe recovery: 15' Drlg mud. 1st Flow (10 min.) - Tool opened with 1/4" blow, decreased to very faint blow. SI #1: 60 min. 2nd Flow (60 min.): Tool opened with no blow, and remained thru flow period. SI #2: 120 min. (Inside Recorder @ 8336'): IHP=4183#, FHP=4136#, IFP=65#, FIFP=53#, ISIP=1486#, 2nd IFP=60#, 2nd FFP=53#, 2nd SIP=230#. Sampler (2100 cc) Recovery: 2100 cc mud.	
7/15/76	Ran DST #3: 8486'-8700' (Bottom hole conventional) w/TD @ 8700'. No flow. Pipe Recovery: 400' heavily GCM, 400' heavily GC and very slightly OCM. 1st Flow (10 min.) - Tool opened with fair 5" underwater blow, increased to good 12" underwater blow at end of flow period. SI #1: 60 min. 2nd Flow (60 min.): Tool opened with weak 1/2" underwater blow, increased steadily to fair 5" underwater blow at end of flow period. SI #2: 120 min. (Inside Recorder @ 8468'): IHP=4433#, FHP=4401#, IFP=N/A, FIFP=333#, ISIP=3896#, 2nd IFP=367#, 2nd FFP=381#, 2nd SIP=3049#. Sampler (2100 cc) Recovery: 2000 cc mud, 0.6 SCFG.	
7/19/76	Ran DST #4: 8800'-8950' (Bottom hole conventional) w/TD @ 8950'. No flow. Pipe recovery: 200' mud. 1st Flow (10 min.) - Tool opened with 2" underwater blow, decreased to 1" underwater blow at end of flow period. SI #1: 60 min. 2nd Flow (60 min.): Tool opened with few surface bubbles. Died in 10 minutes and remained thru flow period. SI #2: 120 min. (Inside Recorder @ 8781'): IHP=4601#, FHP=4569#, IFP=129#, FIFP=129#, ISIP=4084#, 2nd IFP=138#, 2nd FFP=127#, 2nd SIP=3051#. Sampler (2100 cc) Recovery: 2100 cc VSGCM.	
7/23/76	Ran DST #5: 9100'-9234' (Bottom hole conventional) w/TD @ 9234'. Well flowed gas. Pipe recovery: 150' SGCM, 220' HG & SOCM, 200' OCM (very fluffy). 1st Flow (10 min.) - Tool opened with 1/2" underwater blow, increased to 2 1/2" underwater blow in 10 min. SI #1: 60 min. 2nd Flow (60 min.) - Tool opened with strong blow. GTS in 18 min. SI #2: 120 min. (Inside Recorder @ 9105'): IHP=4792#, FHP=4779#, IFP=279#, FIFP=293#, ISIP=2832#, 2nd IFP=212#, 2nd FFP=264#, 2nd SIP=3802#. Sampler (2100 cc) Recovery: 1000 cc mud, 200 cc oil, 0.85 SCFG.	
7/28/76	Ran DST #6: 9275'-9500' (Bottom hole conventional) w/TD @ 9500'. Well flowed gas. Pipe recovery: 422' GCM, 216' GCM and OCM. 1st Flow (10 min.) - Tool opened with weak 1" underwater blow, increased to fair blow to bottom of bucket in 8 min., and remained thru flow period. SI #1: 60 min. 2nd Flow (63 min.) - Tool opened with fair 5" underwater blow, increased to strong blow to bottom of bucket in 1/2 minute, GTS in 14 min. SI #2: 120 min. (Inside Recorder @ 9280'): IHP=4913#, FHP=4836#, IFP=399#, FIFP=378#, ISIP=1136#, 2nd IFP=294#, 2nd FFP=312#, 2nd SIP=3332#. Sampler (2100 cc) Recovery: 1400 cc HG & MCO, 1.6 SCFG.	

UPRC Acquisition
Bingham 10-1 NW NE
Sec 10, T2N, R7E
Well History

Date	Activity	Status After Activity
7/31/76	Ran DST #7: 9500'-9668' (Bottom hole conventional) w/TD @ 9668'. No flow. Pipe Recovery: 190' SGCDM. 1st Flow (10 min.) - Tool opened with very weak 1/2" underwater blow, increased to 1 1/2" underwater blow at end of flow period. SI #1: 60 min. 2nd Flow (60 min.) - Tool opened with very weak surface bubbles, increased to 5" underwater blow at end of flow period. SI #2: 120 min. (Inside Recorder @ 9505'): IHP=5128#, FHP=5047#, IFP=116#, FIFP=105#, ISIP=188#, 2nd IFP=151#, 2nd FFP=120#, 2nd SIP=178#. Sampler (2100 cc) Recovery: 1800 cc SGCM, 0.2 SCFG.	
8/5/76	Core #1: 9712'-9747'. Cut 35', Rec. 35'. Core graded from hard and tight @ top to some porosity and oil saturation at bottom.	
9/2/76	TD=10380'. Perf. 9753'-58', 75'-85', 90'-96', 9822'-41', 42'-48', 62'-68', 80'-86', 9926'-36' w/2 JSPF.	9,753'-58', 75'-85', 90'-96', 9,822'-41', 42'-48', 62'-68', 80'-86', 9,926'-36'
9/5/76	Set ret. pkr @ 9703'. Swabbed 15 BW and well kicked off.	9,753'-58', 75'-85', 90'-96', 9,822'-41', 42'-48', 62'-68', 80'-86', 9,926'-36'
9/7/76	Flowed 24 hrs on 19/64" choke. Produced 632 BO, 557 MCFG, 0 BW. FTP=825 psi.	9,753'-58', 75'-85', 90'-96', 9,822'-41', 42'-48', 62'-68', 80'-86', 9,926'-36'
9/8/76	Set 7" pkr w/plug @ 9710'.	
9/9/76	Dumped 3 sx sand on pkr @ 9710'. Perf'd 9100'-05', 15'-28', 45'-60', 9200'-20'.	9,100'-05', 15'-28', 45'-60', 9200'-20'.
9/11/76	Swabbed well 6 hrs to 8700'. Rec'd 42 BBL lease crude w/no apparent fluid entry.	9,100'-05', 15'-28', 45'-60', 9200'-20'.
9/13/76	Acid frac'd 9100'-9220' OA w/3000 gal WF-60 pad, 3000 gal WF-60 w/2 lb/gal 100 mesh sand, 3000 gal Super and emulsion w/28% HCl acid, 600 gal WF-20 w/3000 lb 0S-160 unibuttons and 300 lb J-227 benzoic acid flakes. Acid job was repeated 2 more times and flushed w/60 BBLS 2% KCl. MP=8300#, ATP=5500# @ 10 BPM, ISIP=2700#, 15 min. SIP=2050#.	9,100'-05', 15'-28', 45'-60', 9200'-20'.
9/21/76	Swabbed and flowed 8 hrs. Rec'd 78 BO, 78 BLW. No rec. last 2 swab runs.	9,100'-05', 15'-28', 45'-60', 9200'-20'.
9/23/76	To improve fluid entry, oil squeezed perfs (9100-9220 OA) w/320 BBL lease crude w/0.6% free flow C and 0.05% U66 solvent in 3-100 BBL stages, separated by unibeads. Flush w/70 BBL lease crude. ATP=3700# @ 6 BPM, MP=4000#, ISIP=2600#, 15 min. SIP=2000#.	9,100'-05', 15'-28', 45'-60', 9200'-20'.
9/27/76	SITP=230#, swabbed and flowed 39 BLO, 33 BW. Well died.	9,100'-05', 15'-28', 45'-60', 9200'-20'.
10/1/76	Reset pkr @ 9259', perfed Watton Canyon/Rich @ 9300'-06', 70'-80', 9418'-38', 60'-74' w/2 SPF.	9,300'-06', 70'-80', 9418'-38', 60'-74'
10/6/76	Fished pkr.	
10/10/76	Set pkr @ 9045'.	9,300'-06', 70'-80', 9418'-38', 60'-74'
N/A	Acid fractured 9300'-9474' w/28% HCl using ball sealers, but pkrs failed and communication was discovered between Rich and 9100'-9220' OA interval.	

UPRC Acquisition
Bingham 10-1 NW NE
Sec 10, T2N, R7E
Well History

Date	Activity	Status After Activity
10/12/76	Acid fraced 9100'-9220' OA, 9300'-9474' OA w/880 gal 2% KCl w/2500# Benzoic acid flush, 6000 gal WF-60 pad, 6000 gal WF-60 w/2 lb/gal 100 mesh sand, 3000 gal Super-X acid, 3000 gal 28% HCl, 600 gal WF-20 w/500 lb Benzoic acid flakes, 6000 gal WF-60 pad, 6000 gal WF-60 w/2 lb/gal 100 mesh sand, 3000 gal Super-X acid, 7000 gal 28% HCl, 3000 gal WF-20. MTP=7500 psi, ATP=5300 psi, Avg. rate 14 BPM, ISIP=2100 psi, 15 min. SIP=1500 psi.	9,100'-05', 15'-28', 45'-60', 9,200'-20', 9,300'-06', 70'-80', 9,418'-38', 60'-74'
10/13/76	Flowed 8 hrs., 16/64" choke, produced 284 BO, 272 MCF, 0 BW, FTP=1100 psi.	9,100'-05', 15'-28', 45'-60', 9,200'-20', 9,300'-06', 70'-80', 9,418'-38', 60'-74'
10/14/76	Ran Borehole Audio Tracer Survey 9653'-9000' with well flowing ARO 30 BOPH. Preliminary interpretation was that there was no fluid movement below bottom perf at 9474'. Thus the RBP set to isolate the Nugget was not leaking.	9,100'-05', 15'-28', 45'-60', 9,200'-20', 9,300'-06', 70'-80', 9,418'-38', 60'-74'
10/17/76	TOOH w/pkr @ 9045'.	9,100'-05', 15'-28', 45'-60', 9,200'-20', 9,300'-06', 70'-80', 9,418'-38', 60'-74'
10/19/76	Landed 2 7/8" in pkr @ 9710'.	
11/2/76	Install Dual X-mas tree.	DUAL: Nugget (9753'-9936' OA), Twin Creek (9100'-9220' OA, 9300'-9474' OA)
11/8/76	Flowed Nugget (9753'-9936' OA) 3 hrs. on 18/64" choke ARO 840 BOPD, 773 MCFD, FTP=1200#. Flowed Twin Creek (9100'-9220' OA, 9300'-9474' OA) 3 hrs on 18/64" choke ARO 840 BOPD, 772 MCFD, FTP=1125#.	DUAL: Nugget (9753'-9936' OA), Twin Creek (9100'-9220' OA, 9300'-9474' OA)
9/78	Nugget (9753'-9936' OA) was producing large water volumes. Spinner survey showed very little oil production and large water volumes from perfs below 9800'. Well was killed, TOOH w/tbg strings. The pkr @ 9710' was milled and the remains pushed to 9862'. A CIBP was set @ 9810' and the Upper Nugget was perfed @ 9707'-20', 36'-46'. The Nugget (9707'-9796') was swab tested but recovered mostly water. The Nugget was shut-in. The Twin Creek (9100'-9220' OA, 9300'-9474' OA) was acidized with 28% HCl to clean up any perf damage that may have occurred while the pkr was milled. The Twin Creek flowed 323 BOPD, 282 MCFD, 109 BWPD after acid.	DUAL: Nugget (9,707'-20', 36'-46', 9,753'-58', 75'-85', 90'-96'), Twin Creek (9,100'-9,220' OA, 9,300'-9,474' OA)
9/80	Pulled dual tbg string and installed an ESP to produce the Twin Creek (9100'-9220' OA, 9300'-9474' OA). Dual pkr hung up @ 7613' while tripping tbg. Tbg was cut off 15' above pkr and a minimum csg ID log was run. Logging tool hung up @ 8034' and 2 arms pulled loose. The csg was milled out and the dual pkr and tbg were retrieved. A 4 1/2" scab liner was cemented 7346'-9806', isolating all Nugget and Twin Creek perfs. Perfed "Rich" zones 9300'-16', 55'-65', 9413'-40', 55'-69' and acidized w/28% HCl.	9300'-16', 55'-65', 9413'-40', 55'-69'
10/80	Reda ESP installed, pumped at rate of 93 BOPD, 108 MCFD, 305 BWPD.	9300'-16', 55'-65', 9413'-40', 55'-69'
3/81	As a result of ESP problems, replaced with rod pump.	9300'-16', 55'-65', 9413'-40', 55'-69'
4/7/81	Pumped 68 BOPD, 79 MCFD, 146 BWPD.	9300'-16', 55'-65', 9413'-40', 55'-69'
4/8/85	Fish rods, run rods.	9300'-16', 55'-65', 9413'-40', 55'-69'
5/17/85	Replaced 2-1" rods.	9300'-16', 55'-65', 9413'-40', 55'-69'
11/18/85	Rod part.	9300'-16', 55'-65', 9413'-40', 55'-69'
12/16/85	Prod. 29 BOPD, 57 MCFD, 389 BWPD in "Rich" member of Twin Creek. Nugget Cum: 446 MBO, 509 MMCF, 28 MBW. Twin Creek Cum: 1008 MBO, 1180 MMCF, 832 MBW.	9300'-16', 55'-65', 9413'-40', 55'-69'
12/24/85	Body break in rod. Fish, run rods and new pump.	9300'-16', 55'-65', 9413'-40', 55'-69'

UPRC Acquisition
Bingham 10-1 NW NE
Sec 10, T2N, R7E
Well History

Date	Activity	Status After Activity
3/6/86	American Quasar blocks proposed addition of Sliderock pay (9534'-74', 78'-94', 9606'-16').	9300'-16', 55'-65', 9413'-40', 55'-69'
11/18/86	Pump repair.	9300'-16', 55'-65', 9413'-40', 55'-69'
6/23/87	Ran new rod pump.	9300'-16', 55'-65', 9413'-40', 55'-69'
6/30/87	Fished and replaced 10 rods.	9300'-16', 55'-65', 9413'-40', 55'-69'
7/24/87	Replaced rods.	9300'-16', 55'-65', 9413'-40', 55'-69'
8/13/87	New gas anchor installed.	9300'-16', 55'-65', 9413'-40', 55'-69'
2/94	Well status: SI due to rod and tbg failures. Propose ESP.	9300'-16', 55'-65', 9413'-40', 55'-69'
5/20/95	Ran ESP	9300'-16', 55'-65', 9413'-40', 55'-69'
9/11/95	SI due to a downhole failure and ESP electrical panel problems. Rate 30 BOPD, 45 MCFD, 450 BWPD.	9300'-16', 55'-65', 9413'-40', 55'-69'
3/14/97	TIH w/sub pump. Reinitiated production.	9300'-16', 55'-65', 9413'-40', 55'-69'
3/21/97	First oil production.	9300'-16', 55'-65', 9413'-40', 55'-69'

RECEIVED
MAR 0 1 2004
DIV. OF OIL, GAS & MINING

BINGHAM 10-1

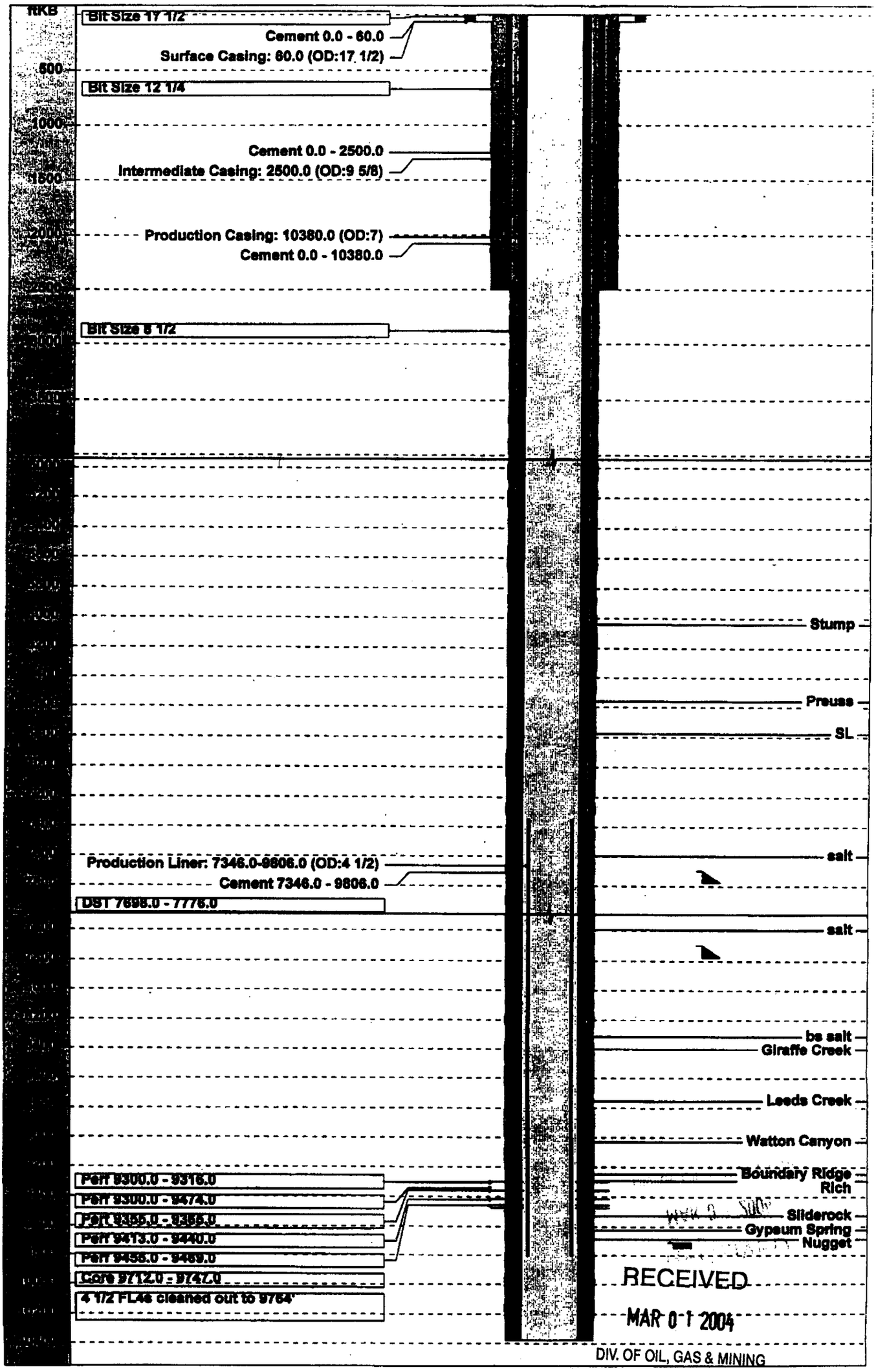

RECEIVED
MAR 01 2004
DIV. OF OIL, GAS & MINING

BINGHAM 10-1

Meridian: SL Township: 2n Range: 7e Section: 10 Quarter: NW NE		
State: Utah County: SUMMIT		Permit: 5/26/76
Lease Name: BINGHAM 10-1	API Code: 430433002500	
TD: 10380.0 ftKB (Nugget)	KB: 6778.0 ft	GR: 6778.0 ft
Completion: 11/7/76	Logs: DLL BHC FDC CNL GR PML HDT	
Spud: 6/5/76	Co-ord: N 682.0 ft / W 3279.0 ft	
Abandon: NA	Status: (none)	
Casing: 17 1/2 in Surface Casing @ 60.0 ftKB, 9 5/8 in Intermediate Casing @ 2500.0 ftKB, 7 in Production Casing @ 10380.0 ftKB, 4 1/2 i		
Tubing:		

Cores		Stimulations/Treatments		
Interval (ftKB)	R'cvd	Date	Interval (ftKB)	Type
9712.0-9747.0	(35.0)	(none)		

Perforations

Date	Interval (ftKB)	Shots (/ft)	Type
12/30/99	9300.0-9316.0	4.0	
12/30/99	9300.0-9474.0	4.0	
12/30/99	9355.0-9365.0	4.0	
12/30/99	9413.0-9440.0	4.0	
12/30/99	9455.0-9469.0	4.0	

DST's

(1) 7698.0-7776.0 (salt) HP 3196.0/3171.0

Formations/Horizons

Formation	Top (ftKB)	Subsea	Formation	Top (ftKB)	Subsea
Stump	6040.0	738.0	Watton Canyon	9030.0	-2252.0
Preuss	6560.0	218.0	Boundary Ridge	9250.0	-2472.0
salt	7598.0	-820.0	Rich	9295.0	-2517.0
bs salt	8315.0	-1537.0	Sliderock	9530.0	-2752.0
Giraffe Creek	8400.0	-1622.0	Gypsum Spring	9625.0	-2847.0
Leeds Creek	8755.0	-1977.0	Nugget	9690.0	-2912.0

Bit Out: 60.0, 17 1/2 in
Bit Out: 2500.0, 12 1/4 in
Bit Out: 10380.0, 8 1/2 in
Production Liner Run
Production Casing Cement Run
Perforated: 9300.0-9316.0, 4.0 /ft
Perforated: 9300.0-9474.0, 4.0 /ft
Perforated: 9355.0-9365.0, 4.0 /ft
Perforated: 9413.0-9440.0, 4.0 /ft
Perforated: 9455.0-9469.0, 4.0 /ft
9764.0 - 4 1/2 FL4s cleaned out to 9764'

Production Casing Run
Intermediate Casing Run
Surface Casing Run
Surface Casing Cement Run
Intermediate Casing Cement Run
Production Casing Cement Run
Cored: 9712.0-9747.0
DST: 7698.0-7776.0
5/26/76 Note: (Abandoned Nugget in 1978 & converted to...
(Abandoned Nugget in 1978 & converted to... Note:
Not Used Note: Recompletion Aug 1978: IP not available
Recompletion Aug 1978: IP not available Note: Nugget- 840 BOPD; 773 MCF/D Twin Creeks-...
Nugget- 840 BOPD; 773 MCF/D Twin Creeks-... Note: grav 46.6, 772 MCFGPD GOR 920:1

RECEIVED
MAR 0 1 2004
DIV. OF OIL, GAS & MINING

State of Utah

Department of
Natural Resources

Division of
Oil, Gas & Mining

ROBERT L. MORGAN
Executive Director

LOWELL P. BRAXTON
Division Director

MICHAEL O. LEAVITT
Governor

OLENE S. WALKER
Lieutenant Governor

April 7, 2004

CERTIFIED MAIL NO. 7002 0510 0003 8602 6396

Ms. Sharon Ward
Citation Oil & Gas Corporation
P.O. Box 690688
Houston, Texas 77269-0688

Re: Extended Shut-in and Temporary Abandoned Well Requirements for Fee or State Leases dated January 22, 2004.

Dear Ms. Ward:

This correspondence is in response to your seventeen (17) sundries dated February 11 and February 18, 2004 received by the Division on March 1, 2004. The Division of Oil, Gas and Mining is returning those sundries for lack of sufficient data to approve extended shut-in status.

The submitted sundries did not state the expected length of time to be SI/TA (R649-3-36-1.2) or give an explanation as to how the submitted information proved the well(s) had integrity (R649-3-36-1.3).

For reference, Attachment A lists the wells subject to the request. If you have any question or need additional assistance in regards to this matter please contact me at (801) 538-5281.

Sincerely,

Dustin Doucet
Petroleum Engineer

jc

1594 West North Temple, Suite 1210, PO Box 145801, Salt Lake City, UT 84114-5801
telephone (801) 538-5340 • facsimile (801) 359-3940 • TTY (801) 538-7223 • *www.ogm.utah.gov*

Utah!
Where ideas connect

	Well Name	API	Lease Type	Years Inactive
1	Walker Hollow U 58	43-047-30912	State	7 Years 7 Months
2	Walker Hollow 44	43-047-30688	State	10 Years 7 Months

1	Elkhorn Watton Cyn U 17-2H	43-043-30304	Fee	2 Years 2 Months
2	UPRR 35-2H	43-043-30305	Fee	4 Years 6 Months
3	Bingham 10-1	43-043-30025	Fee	5 Years 7 Months
4	UPRC 3-11H	43-043-30318	Fee	5 Years 8 Months
5	Blonquist 26-1H	43-043-30314	Fee	6 Years 4 Months
6	Blonquist 26-3	43-043-30235	Fee	6 Years 4 Months
7	Bingham 2-2	43-043-30028	Fee	6 Years 7 Months
8	Elkhorn Watton Cyn U 19-2X	43-043-30300	Fee	6 Years 8 Months
9	Elkhorn Watton Cyn U 18-1	43-043-30284	Fee	7 Years 4 Months
10	Bingham 2-4	43-043-30038	Fee	7 Years 8 Months
11	Bingham 2-3	43-043-30033	Fee	10 Years 7 Months
12	UPRR 3-1	43-043-30012	Fee	10 Years 8 Months
13	Judd 34-1	43-043-30061	Fee	10 Years 9 Months
14	Judd 34-3	43-043-30098	Fee	10 Years 9 Months
15	Pineview 4-4S	43-043-30083	Fee	10 Years 9 Months

Attachment A

STATE OF UTAH
DIVISION OF OIL, GAS AND MINING

5. Lease Designation and Serial Number: **FEE**

6. If Indian, Allottee or Tribe Name:

7. Unit Agreement Name:

SUNDRY NOTICES AND REPORTS ON WELLS

Do not use this form for proposals to drill new wells, deepen existing wells, or to re-enter plugged and abandoned wells. Use APPLICATION FOR PERMIT TO DRILL OR DEEPEN form for such proposals.

1. Type of Well: OIL ☒ GAS ☐ OTHER:

8. Well Name and Number: **Bingham 10-1**

2. Name of Operator: **Citation Oil & Gas Corp.**

9. API Well Number: **43-043-30025**

3. Address and Telephone Number: **P O Box 690688, Houston, Texas 77269 (281) 517-7800**

10. Field and Pool, or Wildcat: **Pineview Twin Creek**

4. Location of Well
Footages: **682 FNL & 3279 FWL**
QQ, Sec., T., R., M.: **NW NE Sec. 10-2N-7E**
County: **Summit**
State: **Utah**

11. CHECK APPROPRIATE BOXES TO INDICATE NATURE OF NOTICE, REPORT, OR OTHER DATA

NOTICE OF INTENT (Submit in Duplicate)

- ☐ Abandonment
- ☐ Casing Repair
- ☐ Change of Plans
- ☐ Conversion to Injection
- ☐ Fracture Treat
- ☐ Multiple Completion
- ☐ Other
- ☐ New Construction
- ☐ Pull or Alter Casing
- ☐ Recompletion
- ☐ Shoot or Acidize
- ☐ Vent or Flare
- ☐ Water Shut-Off

Approximate date work will start

SUBSEQUENT REPORT (Submit Original Form Only)

- ☐ Abandonment*
- ☐ Casing Repair
- ☐ Change of Plans
- ☐ Conversion to Injection
- ☐ Fracture Treat
- ☒ Other **SI extension – supplemental information**
- ☐ New Construction
- ☐ Pull or Alter Casing
- ☐ Shoot or Acidize
- ☐ Vent or Flare
- ☐ Water Shut-Off

Date of work completion

Report results of **Multiple Completions** and **Recompletions** to different reservoirs on WELL COMPLETION OR RECOMPLETION AND LOG form

* Must be accompanied by a cement verification report.

12. DESCRIBE PROPOSED OR COMPLETED OPERATIONS (Clearly state all pertinent details, and give pertinent dates. If well is directionally drilled, give subsurface locations and measured and true vertical depths for all markers and zones pertinent to this work.)

Citation Oil & Gas Corp. requests approval to retain this wellbore in a shut in status until 1/1/2006 in order to evaluate for either polymer treatment or Elkhorn Watton Canyon waterflood expansion. By this date, we should know if Elkhorn Watton Canyon economics merit waterflood expansion of the surrounding areas. At present, CP = 20 psi, TP = 20 psi, Casing-Casing Annular Pressure = 0 psi and fluid level is 600' from surface.

COPY SENT TO OPERATOR
Date: 7-22-04
Initials: CHD

13. Name & Signature: Debra Harris **Debra Harris** Title: **Prod/Reg Coordinator** Date: **7/8/2004**

(This space for State use only)

APPROVED BY THE STATE OF UTAH DIVISION OF OIL, GAS, AND MINING
DATE: 7/21/04
BY: [illegible]
* See attached letter dated 7/21/04

(12\92) (See Instructions on Reverse Side)

RECEIVED
JUL 14 2004
DIV. OF OIL, GAS & MINING

State of Utah

Department of Natural Resources

ROBERT L. MORGAN
Executive Director

Division of Oil, Gas & Mining

LOWELL P. BRAXTON
Division Director

OLENE S. WALKER
Governor

GAYLE F. McKEACHNIE
Lieutenant Governor

July 21, 2004

CERTIFIED MAIL NO. 7002 0510 0003 8602 5221

Ms. Debra Harris
Citation Oil & Gas Corporation
P.O. Box 690688
Houston, Texas 77269-0688

Re: Extended Shut-in and Temporary Abandoned Well Requirements for Fee or State Leases dated January 22, 2004.

Dear Ms. Harris:

This correspondence is in response to Citation Oil & Gas Corporation's ("Citation") seventeen (17) sundries with various dates between June 8 and July 18, 2004. It is the Division of Oil, Gas and Mining's (the "Division") understanding that Citation intends to plug four (4) wells this year and requests extended shut-in/temporary abandonment for the remaining thirteen (13) wells as various water floods involving these wells are currently under evaluation regarding economics, polymer treatment, conversion to injectors, and possible expansion.

Based on the proposed plan to plug and abandon the Bingham 2-3, Pineview 4-4S, Blonquist 26-1H and Judd 34-1, and submitted information for the other thirteen (13) wells the Division grants all seventeen (17) wells shut-in/temporary abandonment extensions, with the condition the wells are placed at a minimum on quarterly monitoring and documenting of pressures and fluid levels. The documented information for these wells should be submitted to the Division at the end of the year for review. However, if pressures or fluid levels change significantly during the year please inform the Division immediately. Corrective action may be necessary. These extensions are valid through June 8, 2005, allowing adequate time to complete the proposed work. The approved sundries are enclosed with this letter.

1594 West North Temple, Suite 1210, PO Box 145801, Salt Lake City, UT 84114-5801
telephone (801) 538-5340 • facsimile (801) 359-3940 • TTY (801) 538-7458 • *www.ogm.utah.gov*

Utah!
Where ideas connect™

For reference, Attachment A lists the wells subject to the request. If you have any question or need additional assistance in regards to this matter please contact me at (801) 538-5281.

Sincerely,

Dustin Doucet
Petroleum Engineer

CLD:jc
Enclosures

cc: Well file
SITLA

	Well Name	API	Lease Type	Years Inactive
1	Walker Hollow U 58	43-047-30912	State	7 Years 7 Months
2	Walker Hollow 44	43-047-30688	State	10 Years 7 Months

1	Elkhorn Watton Cyn U 17-2H	43-043-30304	Fee	2 Years 2 Months
2	UPRR 35-2H	43-043-30305	Fee	4 Years 6 Months
3	Bingham 10-1	43-043-30025	Fee	5 Years 7 Months
4	UPRC 3-11H	43-043-30318	Fee	5 Years 8 Months
5	Blonquist 26-1H	43-043-30314	Fee	6 Years 4 Months
6	Blonquist 26-3	43-043-30235	Fee	6 Years 4 Months
7	Bingham 2-2	43-043-30028	Fee	6 Years 7 Months
8	Elkhorn Watton Cyn U 19-2X	43-043-30300	Fee	6 Years 8 Months
9	Elkhorn Watton Cyn U 18-1	43-043-30284	Fee	7 Years 4 Months
10	Bingham 2-4	43-043-30038	Fee	7 Years 8 Months
11	Bingham 2-3	43-043-30033	Fee	10 Years 7 Months
12	UPRR 3-1	43-043-30012	Fee	10 Years 8 Months
13	Judd 34-1	43-043-30061	Fee	10 Years 9 Months
14	Judd 34-3	43-043-30098	Fee	10 Years 9 Months
15	Pineview 4-4S	43-043-30083	Fee	10 Years 9 Months

Attachment A

FORM 9

STATE OF UTAH
DIVISION OF OIL, GAS AND MINING

5. Lease Designation and Serial Number: **FEE**

6. If Indian, Allottee or Tribe Name:

7. Unit Agreement Name:

SUNDRY NOTICES AND REPORTS ON WELLS

Do not use this form for proposals to drill new wells, deepen existing wells, or to re-enter plugged and abandoned wells. Use APPLICATION FOR PERMIT TO DRILL OR DEEPEN form for such proposals.

1. Type of Well: OIL ☒ GAS ☐ OTHER:

8. Well Name and Number: **Bingham 10-1**

2. Name of Operator: **Citation Oil & Gas Corp.**

9. API Well Number: **43-043-30025**

3. Address and Telephone Number: **P O Box 690688, Houston, Texas 77269 (281) 517-7800**

10. Field and Pool, or Wildcat: **Pineview Twin Creek**

4. Location of Well
Footages: **682 FNL & 3279 FWL**
QQ, Sec., T., R., M.: **NW NE Sec. 10-2N-7E**
County: **Summit**
State: **Utah**

11. CHECK APPROPRIATE BOXES TO INDICATE NATURE OF NOTICE, REPORT, OR OTHER DATA

NOTICE OF INTENT
(Submit in Duplicate)

- ☐ Abandonment
- ☐ Casing Repair
- ☐ Change of Plans
- ☐ Conversion to Injection
- ☐ Fracture Treat
- ☐ Multiple Completion
- ☐ New Construction
- ☐ Pull or Alter Casing
- ☐ Recompletion
- ☐ Shoot or Acidize
- ☐ Vent or Flare
- ☐ Water Shut-Off
- ☒ Other **Temporary Abandoned Status Renewal**

Approximate date work will start _____

SUBSEQUENT REPORT
(Submit Original Form Only)

- ☐ Abandonment*
- ☐ Casing Repair
- ☐ Change of Plans
- ☐ Conversion to Injection
- ☐ Fracture Treat
- ☐ Other _____
- ☐ New Construction
- ☐ Pull or Alter Casing
- ☐ Shoot or Acidize
- ☐ Vent or Flare
- ☐ Water Shut-Off

Date of work completion _____

Report results of **Multiple Completions** and **Recompletions** to different reservoirs on WELL COMPLETION OR RECOMPLETION AND LOG form

* Must be accompanied by a cement verification report.

12. DESCRIBE PROPOSED OR COMPLETED OPERATIONS (Clearly state all pertinent details, and give pertinent dates. If well is directionally drilled, give subsurface locations and measured and true vertical depths for all markers and zones pertinent to this work.)

Citation Oil & Gas Corp. requests approval to retain this wellbore in a shut in status until 1/1/2006 in order to evaluate for either polymer treatment or Elkhorn Watton Canyon waterflood expansion. By this date, we should know if Elkhorn Watton Canyon economics merit waterflood expansion of the surrounding areas.

2004 - CP = 20 psi, TP = 20 psi, Casing-Casing Annular Pressure = 0 psi and fluid level is 600' from surface.

Current -CP = 55 psi and FL is 1732' from surface

THIS SUNDRY IS BEING RETURNED; INSUFFICIENT DATA WAS SUBMITTED TO APPROVE THE REQUESTED ACTION (see R649-3-36 and Certified Letter Dated December 5, 2005).

[signature] December 5, 2005
Utah Division of Oil, Gas and Mining

13. Name & Signature: Debra Harris **Debra Harris** Title: **Prod/Reg Coordinator** Date: **7/27/2005**

(This space for State use only)

(12\92)

COPY SENT TO OPERATOR
Date: 12-7-05
Initials: CHD

(See Instructions on Reverse Side)

RECEIVED
AUG 02 2005
DIV. OF OIL, GAS & MINING

43043 30025
2N 7E 10

JON M. HUNTSMAN, JR.
Governor

GARY R. HERBERT
Lieutenant Governor

State of Utah

Department of Natural Resources

MICHAEL R. STYLER
Executive Director

Division of Oil, Gas & Mining

JOHN R. BAZA
Division Director

December 5, 2005

CERTIFIED MAIL NO. 7002 0510 0003 8603 0140

Ms. Debra Harris
Citation Oil & Gas Corporation
P.O. Box 690688
Houston, Texas 77269-0688

Re: Second Notice of Extended Shut-in and Temporarily Abandoned Well Requirements for Wells on Fee or State Leases dated January 22, 2004.

Dear Ms. Harris:

This correspondence is in response to Citation Oil & Gas Corporation's ("Citation") fourteen (14) sundries with various dates between June 23 and October 20, 2005. In 2004, the Division of Oil, Gas and Mining (the "Division") gave approval for extended shut-in/temporarily abandoned (SI/TA) well status for the then seventeen (17) SI/TA wells. The approval was based on a plan to plug and abandon (P&A) four (4) wells and submit integrity information on the remaining thirteen (13) wells. In 2004, Citation did plug three (3) wells and submitted some limited integrity information on the remaining fourteen (14) wells.

In 2005, a plan dated July 21, 2005 (actual date appears to have been July 20, 2005 as this is the date stamp from the fax and the date stamped as received by the Division) was submitted in addition to the several sundries with various information on them requesting extended SI/TA. Inadequate information was supplied for approval of extended SI/TA status as noted on Attachment A. Requests for extended SI/TA status MUST include the following: 1) the reason for extended SI/TA, 2) the length of time expected to be SI/TA and 3) a showing the well has integrity. The Division felt that none of the requests properly addressed the integrity issue. Just supplying pressures and fluid levels does not by itself show wellbore integrity. It is up to the operator to show integrity. The operator should explain how the submitted information shows integrity. Several of the requests were lacking in the first two requirements as well.

In addition to having insufficient information, NOTHING has been accomplished from the submitted plan. Of the fourteen (14) current SI/TA Fee or State wells, the July 20, 2005 plan proposed the P&A of seven (7) wells, conversion to a water injection well for 1 well and the conversion to a salt water disposal well for 1 well. The referenced sundries also suggested that an additional three (3) wells may be P&A out of those fourteen (14) wells.

The Division requests that Citation submit the necessary information for these six wells by January 13, 2006 or further action will be initiated. This information includes reason for SI/TA, length of time for SI/TA and a showing that the wells have integrity. Please refer to the Division letter dated January 22, 2004 for more information on the requirements.

For reference, Attachment A lists the wells subject to the request. If you have any question or need additional assistance in regards to this matter please contact me at (801) 538-5281.

Sincerely,

Dustin Doucet
Petroleum Engineer

Attachment
cc: Well file
Operator compliance file
SITLA

ATTACHMENT A

	Well Name	API	Lease Type	Years Inactive	Reason(s) for Denial
1	Walker Hollow U 58	43-047-30912	State	7 Years 7 Months	Reason, Length, Explanation, Integrity(Dynamic)
2	Walker Hollow 44	43-047-30688	State	17 Years 3 Months	Length, Explanation, Integrity
3	UPRR 35-2H	43-043-30305	Fee	7 Years 1 Month	Length, Explanation
4	Bingham 10-1	43-043-30025	Fee	7 Years 6 Months	Explanation, Integrity(Dynamic)
5	UPRC 3-11H	43-043-30318	Fee	7 Years 4 Months	Explanation, Integrity(Dynamic?)
6	Blonquist 26-3	43-043-30235	Fee	8 Years 9 Months	Reason, Explanation
7	Bingham 2-2	43-043-30028	Fee	8 Years 6 Months	Reason, Explanation
8	Elkhorn Watton Cyn U 19-2X	43-043-30300	Fee	8 Years 7 Months	Length, Explanation, Reason?
9	Elkhorn Watton Cyn U 18-1	43-043-30284	Fee	9 Years 3 Months	Length, Explanation, Reason?
10	Bingham 2-4	43-043-30038	Fee	9 Years 7 Months	Reason, Explanation
11	UPRR 3-1	43-043-30012	Fee	16 Years 2 Months	Explanation, Integrity(Dynamic?)
12	Judd 34-1	43-043-30061	Fee	13 Years 11 Months	Reason, Explanation
13	Judd 34-3	43-043-30098	Fee	13 Years 11 Months	Reason, Explanation
14	Pineview 4-3	43-043-30083	Fee	1 Year 10 Months	Reason,Length, Explanation, Integrity

Length = Lacking length of time information
Explanation = Lacking explanation on how submitted information shows integrity
Integrity = Lacking integrity information
Dynamic = Integrity information shows wellbore condition to be dynamic
Reason = Lacking reason for extended SI/TA

State of Utah

Department of Natural Resources

MICHAEL R. STYLER
Executive Director

Division of Oil, Gas & Mining

JOHN R. BAZA
Division Director

JON M. HUNTSMAN, JR.
Governor

GARY R. HERBERT
Lieutenant Governor

February 14, 2006

CERTIFIED MAIL NO. 7005 0390 0000 7506 4659

Chad Stallard
Citation Oil & Gas Corporation
P.O. Box 690688
Houston, Texas 77269-0688

Re: Extended Shut-in and Temporarily Abandoned Well Requirements for Fee or State Leases.

Dear Mr. Stallard:

The Division of Oil, Gas and Mining (the "Division") is in receipt of your letters dated January 11, 2006 (received by the Division 01/13/2006) in regards to fourteen (14) shut-in or temporarily abandoned (SI/TA) wells. The Division understands that Citation Oil & Gas Corporation ("Citation") plans to reactivate one well, convert one well to a disposal well, convert one well to an injection well and plug and abandon the remaining 11 wells. It is the Divisions understanding that the 11 P&A candidates are being bid out and a rig is expected to start the P&A's by mid-year 2006. Attachment A lists the wells and the proposed plan of action.

Based on the submitted plan of action and integrity information, the Division grants Citation extended SI/TA status for the fourteen wells listed in attachment A. The extensions for these wells are valid through January 1, 2007. The Division expects continual progress on the plugging of the wells and continued monitoring of wellbore integrity. Should wellbore conditions change, Citation should contact the Division immediately. Remedial action may be necessary.

If you have any questions or need additional assistance in regards to the above matters please contact me at (801) 538-5281.

Sincerely,

Dustin K. Doucet
Petroleum Engineer

cc: Well Files
SITLA

1594 West North Temple, Suite 1210, PO Box 145801, Salt Lake City, UT 84114-5801
telephone (801) 538-5340 • facsimile (801) 359-3940 • TTY (801) 538-7458 • *www.ogm.utah.gov*

Well Name	API	Lease Type	Reason for Denial	Citations Plans for wellbore	When(year)
Walker Hollow Unit #58	43-047-30912	State	Reason, Length, Explanation, Integrity	Reactivate	2006
Walker Hollow Unit #44	43-047-30688	State	Length, Explanation, Integrity	Convert to injection	2006-2008
UPRR 35-2H	43-043-30305	Fee	Length, Explanation	P&A	2006-2007
Bingham 10-1	43-043-30025	Fee	Explanation, Integrity	Convert to SWD	2006-2007
UPRC 3-11H	43-043-30318	Fee	Explanation, Integrity	P&A (had been SWD cand)	2006-2007
Blonquist 26-3	43-043-30235	Fee	Reason, Explanation	P&A	2006-2007
Bingham 2-2	43-043-30028	Fee	Reason, Explanation	P&A	2006-2007
Elkhorn Watton Cyn U 19-2X	43-043-30300	Fee	Length, Explanation, Reason	P&A	2006-2007
Elkhorn Watton Cyn U 18-1	43-043-30284	Fee	Length, Explanation, Reason	P&A	2006-2007
Bingham 2-4	43-043-30038	Fee	Reason, Explanation	P&A	2006-2007
UPRR 3-1	43-043-30012	Fee	Explanation, Integrity	P&A	2006-2007
Judd 34-1	43-043-30061	Fee	Reason, Explanation	P&A	2006-2007
Judd 34-3	43-043-30098	Fee	Reason, Explanation	P&A	2006-2007
Pineview 4-3	43-043-30083	Fee	Reason, Length, Explanation, Integrity	P&A	2006-2007

Citation
OIL & GAS CORP.

January 11, 2006

Mr. Dustin Doucet
State of Utah; Department of Natural Resources
1594 West North Temple, Suite 1210
PO Box 145801
Salt Lake City, UT 84114-5801

Re: Utah TA request

Dear Mr. Doucet:

In a letter dated December 5, 2005, the State of Utah requested further information on multiple SI/TA sundries that were submitted by Citation Oil and Gas. Of key concern were the following: The reason for extended SI, the length of time expected to be SI and to explain how the submitted information demonstrates that the well has integrity.

Attached is a spreadsheet which lists each well and Citations' plan and timeframe for each well-bore. A number of the wells listed are wells that are slated for P&A. Citation is attempting to package these wells in order to obtain a rig; we anticipate rig arrival by mid-year 2006. At that point Citation will begin the P&A process on the following wells; UPRR 35-2H, UPRC 3-11H, Blonquist 26-3, Bingham 2-2, Elkhorn Watton Cyn U 19-2X, Elkhorn Watton Cyn U 18-1, Bingham 2-4, UPRR 3-1, Judd 34-1, Judd 34-3 and the Pineview 4-3.

Of these wells, 3 were listed as needing further clarification as to the integrity issue. These wells are the UPRC 3-11H, UPRR 3-1, and the Pineview 4-3. Fluid levels in each of these wells have been fluctuating slightly, but given that these wells are open to formations that are being produced, this is normal. However, it would be Citations' intent to have these wells among the first slated for P&A.

Citation is not interested in the liability associated with inactive well-bores; please know that as soon as it is determined that a well-bore has no future utility, it will be plugged and abandoned.

Given that, Citation Oil and Gas respectfully requests permission to maintain the attached list of wells with a TA status until P&A operations can begin.

Sincerely,

Chad Stallard

Chad S. Stallard
Production Engineer

RECEIVED
JAN 13 2006
DIV. OF OIL, GAS & MINING

Well Name	API	Lease Type	Reason for Denial	Citations Plans for wellbore	When(year)
Walker Hollow Unit #58	43-047-30912	State	Reason, Length, Explanation, Integrity	Reactivate	2006
Walker Hollow Unit #44	43-047-30688	State	Length, Explanation, Integrity	Convert to injection	2006-2008
UPRR 35-2H	43-043-30305	Fee	Length, Explanation	P&A	2006-2007
Bingham 10-1	43-043-30025	Fee	Explanation, Integrity	Convert to SWD	2006-2007
UPRC 3-11H	43-043-30318	Fee	Explanation, Integrity	P&A (had been SWD cand)	2006-2007
Blonquist 26-3	43-043-30235	Fee	Reason, Explanation	P&A	2006-2007
Bingham 2-2	43-043-30028	Fee	Reason, Explanation	P&A	2006-2007
Elkhorn Watton Cyn U 19-2X	43-043-30300	Fee	Length, Explanation, Reason	P&A	2006-2007
Elkhorn Watton Cyn U 18-1	43-043-30284	Fee	Length, Explanation, Reason	P&A	2006-2007
Bingham 2-4	43-043-30038	Fee	Reason, Explanation	P&A	2006-2007
UPRR 3-1	43-043-30012	Fee	Explanation, Integrity	P&A	2006-2007
Judd 34-1	43-043-30061	Fee	Reason, Explanation	P&A	2006-2007
Judd 34-3	43-043-30098	Fee	Reason, Explanation	P&A	2006-2007
Pineview 4-3	43-043-~~30083~~ 30077	Fee	Reason, Length, Explanation, Integrity	P&A	2006-2007

RECEIVED
JAN 13 2006
DIV. OF OIL, GAS & MINING

Citation
OIL & GAS CORP.

January 11, 2006

Mr. Dustin Doucet
State of Utah; Department of Natural Resources
1594 West North Temple, Suite 1210
PO Box 145801
Salt Lake City, UT 84114-5801

Re: **Bingham 10-1**

Dear Mr. Doucet:

In a letter dated December 5, 2005, the State of Utah requested further information on multiple SI/TA sundries that were submitted by Citation Oil and Gas. Of key concern were the following: The reason for extended SI, the length of time expected to be SI and to explain how the submitted information demonstrates that the well has integrity.

The Pineview Field is a mature field that produces from multiple intervals in the Twin Creek and Nugget formations. The primary issue in the field is the lack of water disposal facilities. Recently, Citation began evaluating the Bingham 10-1 as a candidate for a salt water disposal well to alleviate this issue. Following the evaluation, Citation will begin the process of converting this well to SWD service or will submit the well for P&A.

Recent data that was submitted for review indicated that the fluid level in the well has dropped from 600' to 1732' and the pressure has risen from 20# to 55#. As this wellbore has perforations open in a formation that is actively being produced, it is normal that the fluid level will shift with time. Citation will begin monitoring the pressure and fluid level to determine whether or not it poses any casing integrity issues.

Citation is not interested in the liability associated with inactive well-bores; however we feel that this well demonstrates significant opportunity to be utilized in the near future. Please know that once it has been determined that the well-bore has no future utility, it will be plugged and abandoned.

Given that, Citation Oil and Gas would like to maintain the Bingham 10-1 with a TA status.

Sincerely,

Chad Stallard

Chad S. Stallard
Production Engineer

JAN 1 3 2006

ATTACHMENT A

T02~~W~~N R07E S-10

	Well Name	API	Lease Type	Years Inactive	Citation's Plans For Wellbore	When(year)
1	Walker Hollow U 58	43-047-30912	State	7 Years 7 Months	Reactivate	2006
2	Walker Hollow 44	43-047-30688	State	17 Years 3 Months	Convert to Injection	2006-2008
3	UPRR 35-2H	43-043-30305	Fee	7 Years 1 Month	P&A	2006-2007
4	**Bingham 10-1**	**43-043-30025**	**Fee**	**7 Years 6 Months**	Convert to SWD	2006-2007
5	UPRC 3-11H	43-043-30318	Fee	7 Years 4 Months	P&A	2006-2007
6	Blonquist 26-3	43-043-30235	Fee	8 Years 9 Months	P&A	2006-2007
7	Bingham 2-2	43-043-30028	Fee	8 Years 6 Months	P&A	2006-2007
8	Elkhorn Watton Cyn U 19-2X	43-043-30300	Fee	8 Years 7 Months	P&A	2006-2007
9	Elkhorn Watton Cyn U 18-1	43-043-30284	Fee	9 Years 3 Months	P&A	2006-2007
10	Bingham 2-4	43-043-30038	Fee	9 Years 7 Months	P&A	2006-2007
11	UPRR 3-1	43-043-30012	Fee	16 Years 2 Months	P&A	2006-2007
12	Judd 34-1	43-043-30061	Fee	13 Years 11 Months	P&A	2006-2007
13	Judd 34-3	43-043-30098	Fee	13 Years 11 Months	P&A	2006-2007
14	Pineview 4-3	43-043-30083	Fee	1 Year 10 Months	P&A	2006-2007

43-043-30025

State of Utah

Department of Natural Resources

MICHAEL R. STYLER
Executive Director

Division of Oil, Gas & Mining

JOHN R. BAZA
Division Director

JON M. HUNTSMAN, JR.
Governor

GARY R. HERBERT
Lieutenant Governor

January 4, 2007

Sharon Ward
Citation Oil & Gas Corp
P.O. Box 690688
Houston, Texas 77269-0688

Re: Extended Shut-in and Temporarily Abandoned Well Requirements for Wells on Fee or State Leases.

Dear Ms. Ward:

Citation Oil & Gas Corp. (Citation) has proposed to plug 16 wells beginning in March of 2007 (see attached email dated 11/20/2006). The majority of these wells wells have approved P&A procedures in effect (see attachment A for wells that are currently approved for P&A and are planned for a March start date). Based on this plan of action and information provided, The Division of Oil, Gas and Mining (Division) approves extended SI/TA for the wells on Attachment A through July 1, 2007 at which time Citation shall submit plans for reactivation or plugging of those wells not already addressed.

Federal approval is required on all Federal lease wells. If you have any questions concerning this matter, please contact me at (801) 538-5281.

Sincerely,

Dustin K. Doucet
Petroleum Engineer

Attachments
cc: Well File
SITLA

1594 West North Temple, Suite 1210, PO Box 145801, Salt Lake City, UT 84114-5801
telephone (801) 538-5340 • facsimile (801) 359-3940 • TTY (801) 538-7458 • *www.ogm.utah.gov*

ATTACHMENT A

Wells with Approved P&A's

	Well Name	API	Lease Type	Years Inactive
1	Walker Hollow U 58	43-047-30912	State	10 Years 7 Months
2	Walker Hollow 44	43-047-30688	State	13 Years 7 Months
3	UPRR 35-2H	43-043-30305	Fee	7 Years 6 Months
4	UPRC 3-11H	43-043-30318	Fee	8 Years 8 Months
5	Blonquist 26-3	43-043-30235	Fee	9 Years 4 Months
6	Bingham 2-2	43-043-30028	Fee	9 Years 7 Months
7	Elkhorn Watton Cyn U 19-2X	43-043-30300	Fee	9 Years 8 Months
8	Elkhorn Watton Cyn U 18-1	43-043-30284	Fee	10 Years 4 Months
9	Bingham 2-4	43-043-30038	Fee	10 Years 8 Months
10	UPRR 3-1	43-043-30012	Fee	13 Years 8 Months
11	Judd 34-1	43-043-30061	Fee	13 Years 9 Months
12	Judd 34-3	43-043-30098	Fee	13 Years 9 Months
13	Pineview 4-3	43-043-30077	Fee	3 Years 11 Months

Wells without Approved P&A's

	Well Name	API	Lease Type	Years Inactive
1	Bingham 10-1	43-043-30025	Fee	8 Years 7 Months
2	Elkhorn Watton Cyn U 17-2H	43-043-30304	Fee	0 Years 11 Months
3	USA Pearl Broadhurst U 22	43-047-31025	Fed	20 Years 0 Months
4	Walker Hollow Unit 36	43-047-30282	Fed	6 Years 11 Months
5	Walker Hollow Unit 74	43-047-31031	Fed	3 Years 7 Months
6	Walker Hollow Unit 60	43-047-30913	Fed	21 Years 6 Months
7	Upper Valley Unit 2	43-017-16025	Fed	10 Years 11 Months

COPY SENT TO OPERATOR
DATE: 1-8-07
INITIALS: RM

From: "Sharon Ward" <SWard@cogc.com>
To: <danjarvis@utah.gov>
Date: 11/20/2006 9:06 AM
Subject: FW: Rig Availability

CC: <dustindoucet@utah.gov>

Dan,

Dustin,

Chad Stallard requested that I forward you an email from TETRA Applied Technologies, L. P. advising us that they will be able to start plugging procedures for Citation around March 2007. If you have any questions regarding this information, please contact me.

Sincerely,

Sharon Ward

Permitting Manager/Well Records

Citation Oil & Gas Corp.

wk# 281-517-7309

fax# 281-469-9667

-----Original Message-----
From: David W. Culberson [mailto:dculberson@tetratec.com]
Sent: Thursday, November 02, 2006 4:44 PM
To: Chad Stallard
Cc: Mark Bing; Alan Culberson
Subject: Rig Availability

Gentlemen:

TETRA Applied Technologies, L. P. acknowledges that it has been contracted by Citation Oil and Gas Corporation to plug 16 wells in and around Summit County Utah.

At this time TETRA Applied Technologies, L.P. is extremely busy and in the process of refurbishing our rig fleet. We estimate that one of our rigs will be available to start operations on these wells in March of 2007.

If you have any questions, please let contact me.

Thank you,

David W. Culberson

Sales Manager/Onshore P&A

361-578-3503 office

361-550-9005 cell

361-578-4158 fax

dculberson@tetratec.com

STATE OF UTAH
DEPARTMENT OF NATURAL RESOURCES
DIVISION OF OIL, GAS AND MINING

FORM 9

5. LEASE DESIGNATION AND SERIAL NUMBER: Fee

SUNDRY NOTICES AND REPORTS ON WELLS

6. IF INDIAN, ALLOTTEE OR TRIBE NAME:

Do not use this form for proposals to drill new wells, significantly deepen existing wells below current bottom-hole depth, reenter plugged wells, or to drill horizontal laterals. Use APPLICATION FOR PERMIT TO DRILL form for such proposals.

7. UNIT or CA AGREEMENT NAME:

1. TYPE OF WELL: OIL WELL ☑ GAS WELL ☐ OTHER _____

8. WELL NAME and NUMBER: Bingham 10-1

2. NAME OF OPERATOR: Citation Oil & Gas Corp.

9. API NUMBER: 4304330025

3. ADDRESS OF OPERATOR: P.O. Box 690688 CITY Houston STATE TX ZIP 77269-0688 PHONE NUMBER: (281) 517-7194

10. FIELD AND POOL, OR WILDCAT: Pineview Twin Creek

4. LOCATION OF WELL

FOOTAGES AT SURFACE: 682' FNL & 3279' FWL COUNTY: Summit

QTR/QTR, SECTION, TOWNSHIP, RANGE, MERIDIAN: NWNE 10 2N 7E STATE: UTAH

11. CHECK APPROPRIATE BOXES TO INDICATE NATURE OF NOTICE, REPORT, OR OTHER DATA

TYPE OF SUBMISSION	TYPE OF ACTION		
☐ NOTICE OF INTENT (Submit in Duplicate)	☐ ACIDIZE	☐ DEEPEN	☐ REPERFORATE CURRENT FORMATION
Approximate date work will start:	☐ ALTER CASING	☐ FRACTURE TREAT	☐ SIDETRACK TO REPAIR WELL
	☐ CASING REPAIR	☐ NEW CONSTRUCTION	☑ TEMPORARILY ABANDON
	☐ CHANGE TO PREVIOUS PLANS	☐ OPERATOR CHANGE	☐ TUBING REPAIR
	☐ CHANGE TUBING	☐ PLUG AND ABANDON	☐ VENT OR FLARE
☑ SUBSEQUENT REPORT (Submit Original Form Only)	☐ CHANGE WELL NAME	☐ PLUG BACK	☐ WATER DISPOSAL
Date of work completion:	☐ CHANGE WELL STATUS	☐ PRODUCTION (START/RESUME)	☐ WATER SHUT-OFF
	☐ COMMINGLE PRODUCING FORMATIONS	☐ RECLAMATION OF WELL SITE	☑ OTHER: Renewal of TA Status
	☐ CONVERT WELL TYPE	☐ RECOMPLETE - DIFFERENT FORMATION	

12. DESCRIBE PROPOSED OR COMPLETED OPERATIONS. Clearly show all pertinent details including dates, depths, volumes, etc.

Citation Oil & Gas Corp. requests approval to retain this wellbore in a Temporarily Abandoned status for potential recompletion to the Sliderock formation as a producer. If recompletion is unsuccessful, the well will be converted to a Nugget injection well. Citation is currently evaluating potential in the Sliderock for this field. Once a procedure has been established and authorized, we will submit a Notice of Intent for your approval.

COPY SENT TO OPERATOR
Date: 11/15/09
Initials: CHD

NAME (PLEASE PRINT) Debra Harris TITLE Regulatory Compliance Coordinator

SIGNATURE Debra Harris DATE 8/10/2007

(This space for State use only)

APPROVED BY THE STATE OF UTAH DIVISION OF OIL, GAS AND MINING
DATE: 11/14/07
BY: [illegible]
+ Approval to 12/1/2008

RECEIVED
AUG 16 2007
DIV. OF OIL, GAS & MINING

(5/2000) (See Instructions on Reverse Side)

JON M. HUNTSMAN, JR.
Governor

GARY R. HERBERT
Lieutenant Governor

State of Utah

DEPARTMENT OF NATURAL RESOURCES

MICHAEL R. STYLER
Executive Director

Division of Oil, Gas and Mining

JOHN R. BAZA
Division Director

July 28, 2008

CERTIFIED MAIL NO.: 7004 2510 0004 1824 5759

43 043 30025
Bingham 10-1
2N 7E 10

Debra Harris
Citation Oil & Gas Corp
P.O. Box 690688
Houston, TX 77269-0688

Re: Extended Shut-in and Temporarily Abandoned Well Requirements for Fee or State Leases

Dear Ms. Harris:

As of July 2008, Citation Oil & Gas Corporation has one (1) Fee Lease Well and one (1) Mineral Lease Well (see Attachment A) currently in non-compliance with the requirements for extended shut-in or temporarily abandoned (SI/TA) status. Based on previous correspondence, the Bingham 10-1 well was to be recompleted and put back on production. To date nothing appears to have been done on this well.

Wells SI/TA beyond twelve (12) consecutive months requires filing a Sundry Notice (R649-3-36-1). Wells with five (5) years non-activity or non-productivity shall be plugged, unless the Division grants approval for extended shut-in time upon a showing of good cause by the operator (649-3-36-1.3.3). For extended SI/TA consideration the operator shall provide the Utah Division of Oil, Gas & Mining with the following:

1. Reasons for SI/TA of the well (R649-3-36-1.1).
2. The length of time the well is expected to be SI/TA (R649-3-36-1.2), and
3. An explanation and supporting data if necessary, for showing the well has integrity, meaning that the casing, cement, equipment condition, static fluid level, pressure, existence or absence of Underground Sources of Drinking Water and other factors do not make the well a risk to public health and safety or the environment (R649-3-36-1.3).

Submitting the information suggested below may help show well integrity and may help qualify your well for extended SI/TA. **Note: As of July 1, 2003, wells in violation of the SI/TA rule R649-3-36 may be subject to full cost bonding (R649-3-1-4.2, 4.3).**

1. Wellbore diagram, and
2. Copy of recent casing pressure test, and
3. Current pressures on the wellbore (tubing pressure, casing pressure, and casing/casing annuli pressure) showing wellbore has integrity, and
4. Fluid level in the wellbore, and
5. An explanation of how the submitted information proves integrity.

If the required information is not received within 30 days of the date of this notice, further actions will be initiated. If you have any questions concerning this matter, please contact me at (801) 538-5281.

Sincerely,

Dustin K. Doucet
Petroleum Engineer

JP/js
Enclosure

cc: Jim Davis, SITLA
Well Files
Compliance File

ATTACHMENT A

	Well Name	API	Lease Type	Years Inactive
1	Bingham 10-1	43-043-30025	Fee	10 Years 2 Months
2	Walker Hollow 72	43-047-31227	ML-3175	1 Years 8 Months

FORM 9

STATE OF UTAH
DEPARTMENT OF NATURAL RESOURCES
DIVISION OF OIL, GAS AND MINING

5. LEASE DESIGNATION AND SERIAL NUMBER: Fee

SUNDRY NOTICES AND REPORTS ON WELLS

6. IF INDIAN, ALLOTTEE OR TRIBE NAME:

7. UNIT or CA AGREEMENT NAME:

Do not use this form for proposals to drill new wells, significantly deepen existing wells below current bottom-hole depth, reenter plugged wells, or to drill horizontal laterals. Use APPLICATION FOR PERMIT TO DRILL form for such proposals.

1. TYPE OF WELL: OIL WELL ☑ GAS WELL ☐ OTHER _____

8. WELL NAME and NUMBER: Bingham 10-1

2. NAME OF OPERATOR: Citation Oil & Gas Corp.

9. API NUMBER: 4304330025

3. ADDRESS OF OPERATOR: P O Box 690688 CITY Houston STATE TX ZIP 77269I

PHONE NUMBER: (281) 517-7800

10. FIELD AND POOL, OR WILDCAT: Pineview Twin Creek

4. LOCATION OF WELL

FOOTAGES AT SURFACE: 682 FNL & 3279 FWL

COUNTY: Summit

QTR/QTR, SECTION, TOWNSHIP, RANGE, MERIDIAN: NWNE 10 2N 7E

STATE: UTAH

11. CHECK APPROPRIATE BOXES TO INDICATE NATURE OF NOTICE, REPORT, OR OTHER DATA

TYPE OF SUBMISSION	TYPE OF ACTION		
☑ NOTICE OF INTENT (Submit in Duplicate)	☐ ACIDIZE	☐ DEEPEN	☐ REPERFORATE CURRENT FORMATION
Approximate date work will start:	☐ ALTER CASING	☐ FRACTURE TREAT	☐ SIDETRACK TO REPAIR WELL
Upon Approval	☐ CASING REPAIR	☐ NEW CONSTRUCTION	☐ TEMPORARILY ABANDON
	☐ CHANGE TO PREVIOUS PLANS	☐ OPERATOR CHANGE	☐ TUBING REPAIR
	☐ CHANGE TUBING	☐ PLUG AND ABANDON	☐ VENT OR FLARE
☐ SUBSEQUENT REPORT (Submit Original Form Only)	☐ CHANGE WELL NAME	☑ PLUG BACK	☐ WATER DISPOSAL
Date of work completion:	☐ CHANGE WELL STATUS	☐ PRODUCTION (START/RESUME)	☐ WATER SHUT-OFF
	☐ COMMINGLE PRODUCING FORMATIONS	☐ RECLAMATION OF WELL SITE	☐ OTHER: _____
_____	☐ CONVERT WELL TYPE	☑ RECOMPLETE - DIFFERENT FORMATION	

12. DESCRIBE PROPOSED OR COMPLETED OPERATIONS. Clearly show all pertinent details including dates, depths, volumes, etc.

Citation requests authorization to plug back and recomplete this well per the attached procedure and wellbore diagrams.

COPY SENT TO OPERATOR
Date: 12.30.2008
Initials: KS

NAME (PLEASE PRINT) Mary Torres TITLE Permitting Analyst

SIGNATURE Mary Torres DATE 12/10/2008

(This space for State use only)

APPROVED BY THE STATE OF UTAH DIVISION OF OIL, GAS, AND MINING
DATE: 12/22/08
BY: _____

RECEIVED
DEC 16 2008
DIV. OF OIL, GAS & MINING

(5/2000) (See Instructions on Reverse Side)

Well History Summary

Well: Pineview Field, Bingham #10-1

Surface Location: 682' FNL & 3279' FWL, Section 10, T-2-N, R-7-E
Summit County, Utah

API#: 43-043-30025

Elevations: 6761' GL
6778' KB

TD: 10,380'
PBTD: 9,764'

Casing:
- 13 3/8" conductor @ 60'
- 9 5/8", 36#, K-55 STC @ 2500', cmt w/ 1100 sx
- 7" csg at 10,380' (23 & 26#)
- 4 ½" Production liner from 7346-9806' (13.5# 1314' & 15.1# 1077') (3.826" ID)

Tubing: 172 jts, 2 7/8" w/Sub pump on bottom

Well Status: SI

Perforations:
9300-9316'
9355-9365'
9413-9440'
9455-9469'

Work Over Procedure:

Comments: 1.Well has a scab liner due to known casing issues.

Objective: Test uphole member of Twin Creek.

1. MIRUSU. ND Tree. NU 3M BOP's. TOOH w/ 2-7/8" tubing and sub pump, standing back.

2. PU additional 6,000' of tbg from yard and RIH with bit and scraper to 9525'. (It is important to RIH cautiously as this has never been performed on this well)

3. Once on bottom, circulate bottoms up to tank until returns are clean. (Circulate at least 2-3 casing volumes 442 – 663 bbl's)

4. POOH with B&S and lay down.

5. RU wire-line and RIH and perforate the Twin Creek as following: Per Schlumberger Dual Lateralog dated 8/16/1976.

   8537-8543'
   8549-8558'
   8585-8596'
   8603-8609'
   8626-8634'
   8654-8659'
   8674-8708'

6. POOH and rig down wireline.

7. RU pump company and pump acid per attached design.

8. RD pump company and RU to swab.

9. Swab well and report results to CTR.

10. TIH with tubing and set TAC at 8500', with pump at 8750'

11. ND BOP's. NU tree.

12. TIH w/ rods and hang well on. RDMOSU.

13. Place well on production and place in test.

CITATION OIL AND GAS CORPORATION
WELLBORE DIAGRAM AND INFORMATION
PROPOSED

Well Name:	Bingham 10-1	**Field:**	Pineview
Date:	February 22, 2006	**Location:**	NW/NE Sec. 10, T2N, R7E
County:	Summit	**State:**	Utah

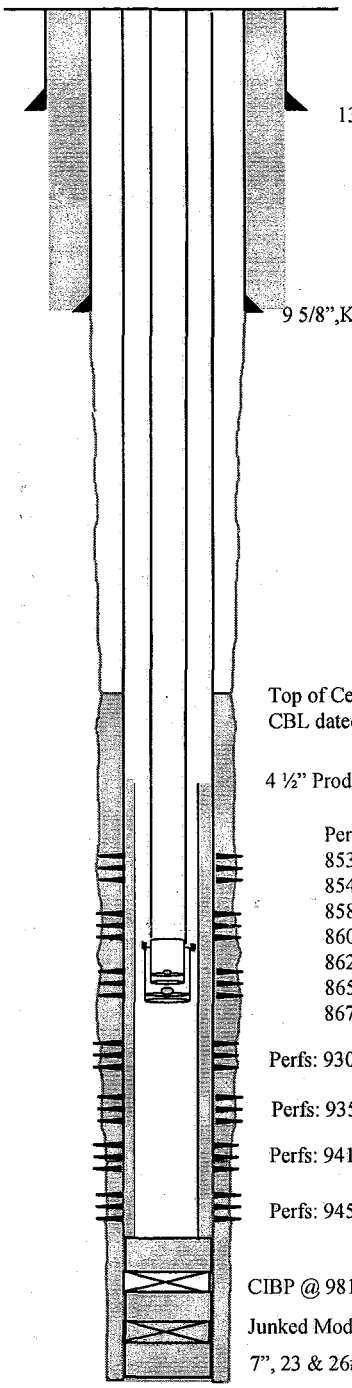

13 3/8", 61# @ 60' cmt w/ 250 sx

9 5/8",K-55 36# Csg @ 2,500' cmt w/ 1100 sx

Top of Cement 6350' per CBL dated 9/1/76

4 ½" Production Liner 7346' – 9806'

Perfs: Twin Creek
8537-8543'
8549-8558'
8585-8596'
8603-8609'
8626-8634'
8654-8659'
8674-8708'

Perfs: 9300-9316

Perfs: 9355-9365'

Perfs: 9413-9440'

Perfs: 9455-9469'

CIBP @ 9810'

Junked Model D @ 9882'

7", 23 & 26#, Csg @ 10,380 cmt'd w/ 2631 sx

PBTD = 9,764'
TD = 10,380'

Surface:	**682' FNL & 3279' FWL**
	Sec. 10, T-2-N, R-7-E
	Summit County, UT
Completed:	**11/7/76**
Elevation:	**6761' GL**
KB:	**17'**
API #:	**43-043-30025**

TUBING DETAIL

Qty	Description	Length	Depth
---	KB	17	17.00
172	2 7/8" EUE	8,500.00	8,517.00
1	Pump	32.75	8,549.75

CASING DETAIL

Size	Weight	Grade	Depth
7"	26	S-95	Surf – 25
7"	23	N-80	25 – 5701
7"	23	S-95	5701 – 7550
7"	26	S-95	7550 – 8320
7"	23	S-95	8320 –10380

CITATION OIL AND GAS CORPORATION
WELLBORE DIAGRAM AND INFORMATION

Well Name:	Bingham 10-1	**Field:**	Pineview
Date:	February 22, 2006	**Location:**	NW/NE Sec. 10, T2N, R7E
County:	Summit	**State:**	Utah

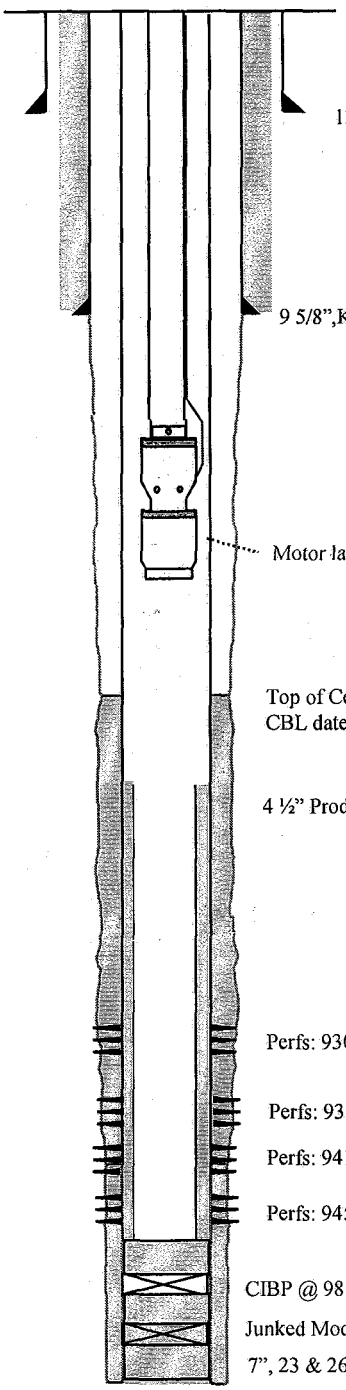

Surface:	**682' FNL & 3279' FWL**
	Sec. 10, T-2-N, R-7-E
	Summit County, UT
Completed:	**11/7/76**
Elevation:	**6761' GL**
KB:	**17'**
API #:	**43-043-30025**

TUBING DETAIL

Qty	Description	Length	Depth
---	KB	17	17.00
172	2 7/8" EUE	5,275.25	5,292.25
1	Sub Pump Assy	32.75	5,325.00

CASING DETAIL

Size	Weight	Grade	Depth
7"	26	S-95	Surf – 25
7"	23	N-80	25 – 5701
7"	23	S-95	5701 – 7550
7"	26	S-95	7550 – 8320
7"	23	S-95	8320 – 10380

August 21, 2008

State of Utah
Division of Oil, Gas and Mining
1594 West North Temple, Suite 1210
Sale Lake City, Utah 84114-5801

ATTN: Mr. Dustin Doucet, Petroleum Engineer

Re: Extended Shut-In and Temporarily Abandoned Well Requirements

Mr. Doucette,

Per your letter dated July 28, 2008 (copy attached) concerning non-compliance with requirements for extended shut-in and/or temporarily abandoned status of two wells which Citation operates, please see the attached correspondence.

- Bingham 10-1 renewal of TA status was approved by your office on 11/14/2007 until 12/1/2008 (see attached). Prior to that date, Citation will submit a Notice of Intent with procedures for recompletion to oil or recompletion and conversion to an injection well, based upon ongoing evaluation of work to be done in this field.

- Walker Hollow Unit 72 Notice of Intent to convert to injection was submitted to your office 2/19/2008. The permit application was submitted to the EPA in early 2006; however, the final permit was only signed by the EPA 6/26/2008 (see attached). Once the conversion procedure has been approved by EPA, work to convert this well will commence, the well will be tested for mechanical integrity prior to commencement of injection. Your office will be notified of conversion and MIT at that time.

If you need additional information please contact me at (281) 517-7194 or via email at dharris@cogc.com.

Sincerely,

Debra Harris
Regulatory Compliance Coordinator

/dkh

Attachments

cc: CTR, SEW

STATE OF UTAH
DEPARTMENT OF NATURAL RESOURCES
DIVISION OF OIL, GAS AND MINING

FORM 9

SUNDRY NOTICES AND REPORTS ON WELLS

Do not use this form for proposals to drill new wells, significantly deepen existing wells below current bottom-hole depth, reenter plugged wells, or to drill horizontal laterals. Use APPLICATION FOR PERMIT TO DRILL form for such proposals.

5. LEASE DESIGNATION AND SERIAL NUMBER: Fee

6. IF INDIAN, ALLOTTEE OR TRIBE NAME:

7. UNIT or CA AGREEMENT NAME:

1. TYPE OF WELL: OIL WELL ☑ GAS WELL ☐ OTHER

8. WELL NAME and NUMBER: Bingham 10-1

2. NAME OF OPERATOR: Citation Oil & Gas Corp.

9. API NUMBER: 4304330025

3. ADDRESS OF OPERATOR: P O Box 690688 CITY Houston STATE TX ZIP 77269I

PHONE NUMBER: (281) 517-7800

10. FIELD AND POOL, OR WILDCAT: Pineview Twin Creek

4. LOCATION OF WELL

FOOTAGES AT SURFACE: 682 FNL & 3279 FWL COUNTY: Summit

QTR/QTR, SECTION, TOWNSHIP, RANGE, MERIDIAN: NWNE 10 2N 7E STATE: UTAH

11. CHECK APPROPRIATE BOXES TO INDICATE NATURE OF NOTICE, REPORT, OR OTHER DATA

TYPE OF SUBMISSION	TYPE OF ACTION		
☑ NOTICE OF INTENT (Submit in Duplicate)	☐ ACIDIZE	☐ DEEPEN	☐ REPERFORATE CURRENT FORMATION
Approximate date work will start:	☐ ALTER CASING	☐ FRACTURE TREAT	☐ SIDETRACK TO REPAIR WELL
Upon Approval	☐ CASING REPAIR	☐ NEW CONSTRUCTION	☐ TEMPORARILY ABANDON
	☐ CHANGE TO PREVIOUS PLANS	☐ OPERATOR CHANGE	☐ TUBING REPAIR
	☐ CHANGE TUBING	☐ PLUG AND ABANDON	☐ VENT OR FLARE
☐ SUBSEQUENT REPORT (Submit Original Form Only)	☐ CHANGE WELL NAME	☑ PLUG BACK	☐ WATER DISPOSAL
Date of work completion:	☐ CHANGE WELL STATUS	☐ PRODUCTION (START/RESUME)	☐ WATER SHUT-OFF
	☐ COMMINGLE PRODUCING FORMATIONS	☐ RECLAMATION OF WELL SITE	☐ OTHER:
	☐ CONVERT WELL TYPE	☑ RECOMPLETE - DIFFERENT FORMATION	

12. DESCRIBE PROPOSED OR COMPLETED OPERATIONS. Clearly show all pertinent details including dates, depths, volumes, etc.

Citation requests authorization to plug back and recomplete this well per the attached procedure and wellbore diagrams.

RECEIVED
JAN 05 2009
PRODUCTION DEPT.

NAME (PLEASE PRINT) Mary Torres TITLE Permitting Analyst

SIGNATURE Mary Torres DATE 12/10/2008

(This space for State use only) APPROVED BY THE STATE OF UTAH DIVISION OF OIL, GAS, AND MINING

DATE: 12/22/08

BY: [illegible]

(See Instructions on Reverse Side)

RECEIVED
DEC 16 2008
DIV. OF OIL, GAS & MINING

(5/2000)

Well History Summary

Well: Pineview Field, Bingham #10-1

Surface Location: 682' FNL & 3279' FWL, Section 10, T-2-N, R-7-E
Summit County, Utah

API#: 43-043-30025

Elevations: 6761' GL
6778' KB

TD: 10,380'
PBTD: 9,764'

Casing:
- 13 3/8" conductor @ 60'
- 9 5/8", 36#, K-55 STC @ 2500', cmt w/ 1100 sx
- 7" csg at 10,380' (23 & 26#)
- 4 ½" Production liner from 7346-9806' (13.5# 1314' & 15.1# 1077') (3.826" ID)

Tubing: 172 jts, 2 7/8" w/Sub pump on bottom

Well Status: SI

Perforations:
9300-9316'
9355-9365'
9413-9440'
9455-9469'

Work Over Procedure:

Comments: 1.Well has a scab liner due to known casing issues.

Objective: Test uphole member of Twin Creek.

1. MIRUSU. ND Tree. NU 3M BOP's. TOOH w/ 2-7/8" tubing and sub pump, standing back.

2. PU additional 6,000' of tbg from yard and RIH with bit and scraper to 9525'. (It is important to RIH cautiously as this has never been performed on this well)

3. Once on bottom, circulate bottoms up to tank until returns are clean. (Circulate at least 2-3 casing volumes 442 – 663 bbl's)

4. POOH with B&S and lay down.

5. RU wire-line and RIH and perforate the Twin Creek as following: Per Schlumberger Dual Lateralog dated 8/16/1976.

   8537-8543'
   8549-8558'
   8585-8596'
   8603-8609'
   8626-8634'
   8654-8659'
   8674-8708'

6. POOH and rig down wireline.

7. RU pump company and pump acid per attached design.

8. RD pump company and RU to swab.

9. Swab well and report results to CTR.

10. TIH with tubing and set TAC at 8500', with pump at 8750'

11. ND BOP's. NU tree.

12. TIH w/ rods and hang well on. RDMOSU.

13. Place well on production and place in test.

CITATION OIL AND GAS CORPORATION
WELLBORE DIAGRAM AND INFORMATION

Well Name:	Bingham 10-1	**Field:**	Pineview
Date:	February 22, 2006	**Location:**	NW/NE Sec. 10, T2N, R7E
County:	Summit	**State:**	Utah

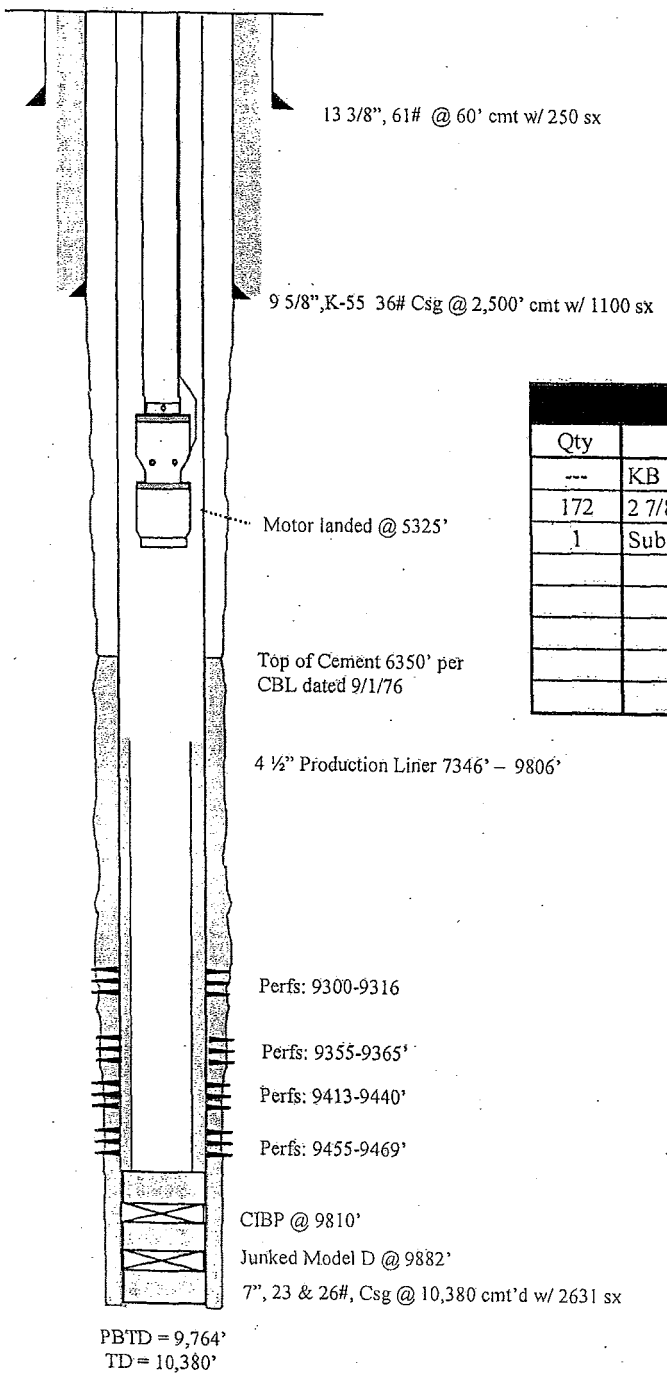

Surface:	682' FNL & 3279' FWL Sec. 10, T-2-N, R-7-E Summit County, UT
Completed:	11/7/76
Elevation:	6761' GL
KB:	17'
API #:	43-043-30025

TUBING DETAIL

Qty	Description	Length	Depth
---	KB	17	17.00
172	2 7/8" EUE	5,275.25	5,292.25
1	Sub Pump Assy	32.75	5,325.00

CASING DETAIL

Size	Weight	Grade	Depth
7"	26	S-95	Surf – 25
7"	23	N-80	25 – 5701
7"	23	S-95	5701 – 7550
7"	26	S-95	7550 – 8320
7"	23	S-95	8320 –10380

CITATION OIL AND GAS CORPORATION
WELLBORE DIAGRAM AND INFORMATION
PROPOSED

Well Name:	Bingham 10-1	**Field:**	Pineview
Date:	February 22, 2006	**Location:**	NW/NE Sec. 10, T2N, R7E
County:	Summit	**State:**	Utah

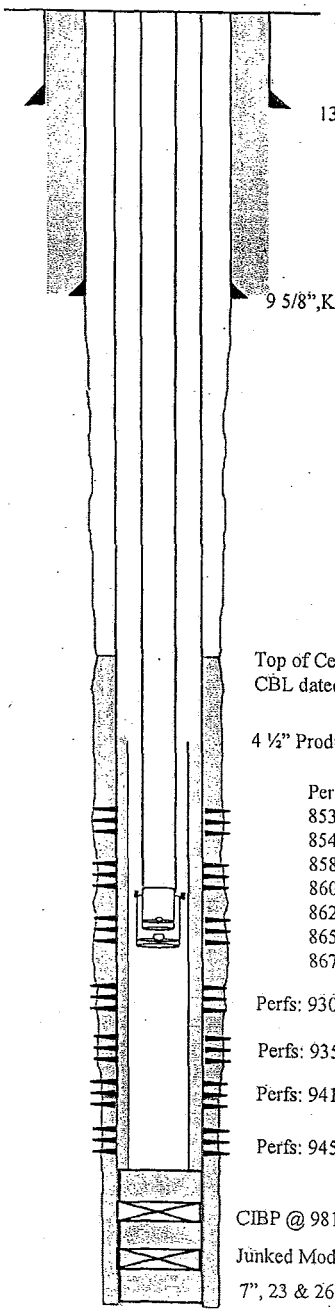

Surface:	682' FNL & 3279' FWL Sec. 10, T-2-N, R-7-E Summit County, UT
Completed:	11/7/76
Elevation:	6761' GL
KB:	17'
API #:	43-043-30025

TUBING DETAIL

Qty	Description	Length	Depth
---	KB	17	17.00
172	2 7/8" EUE	8,500.00	8,517.00
1	Pump	32.75	8,549.75

CASING DETAIL

Size	Weight	Grade	Depth
7"	26	S-95	Surf – 25
7"	23	N-80	25 – 5701
7"	23	S-95	5701 – 7550
7"	26	S-95	7550 – 8320
7"	23	S-95	8320 – 10380

State of Utah
DEPARTMENT OF NATURAL RESOURCES

MICHAEL R. STYLER
Executive Director

Division of Oil Gas and Mining

JOHN R. BAZA
Division Director

JON M. HUNTSMAN, JR.
Governor

GARY R. HERBERT
Lieutenant Governor

RECEIVED
FEB 02 2009
PRODUCTION DEPT.

January 20, 2009

(30 days - 2/19/09)

Debra Harris
Citation Oil & Gas Corp
P.O. Box 690688
Houston, TX 77269-0688

Subject: Bingham 10-1 API 43-043-30025 Walker Hollow Unit 72 API 43-047-31227 Extended Shut-in and Temporary Abandoned Well Requirements for Fee or State Leases dated July 28, 2008

Dear Ms. Harris:

The Division of Oil, Gas and Mining (the Division) is in receipt of your letter dated August 21, 2008 (received by the Division on 8/25/2008) in regards to the two (2) shut-in or temporarily abandoned (SI/TA) wells operated by Citation Oil and Gas Corp (Citation). It is the Divisions understanding that Citation will be submitting a Notice of Intent with procedures for recompletion to oil or recompletion and conversion to an injection well for the Bingham 10-1 (API 43-043-30025).

The Division wishes to remind Citation that extension of TA status for Bingham 10-1 expired on 12/1/2008. It is also the Divisions understanding that Citation is waiting on conversion approval by EPA for Walker Hollow Unit 72 (API 43-047-31227). Please submit required documentation per rule R649-3-36 to keep the above listed wells in compliance.

If the required information is not received within 30 days of the date of this notice, further actions may be initiated. If you have any questions concerning this matter, please contact me at (801) 538-5281.

Sincerely,

Dustin K. Doucet
Petroleum Engineer

DKD/JP/js
cc: Jim Davis, SITLA
Well Files
Compliance File

N:\O&G Reviewed Docs\ChronFile\PetroleumEngineer\SITA

1594 West North Temple, Suite 1210, PO Box 145801, Salt Lake City, UT 84114-5801
telephone (801) 538-5340 • facsimile (801) 359-3940 • TTY (801) 538-7458 • *www.ogm.utah.gov*

UT, SEW, BC, WPS

UTAH DNR OIL, GAS & MINING

STATE OF UTAH
DEPARTMENT OF NATURAL RESOURCES
DIVISION OF OIL, GAS AND MINING

FORM 9

SUNDRY NOTICES AND REPORTS ON WELLS

Do not use this form for proposals to drill new wells, significantly deepen existing wells below current bottom-hole depth, reenter plugged wells, or to drill horizontal laterals. Use APPLICATION FOR PERMIT TO DRILL form for such proposals.

5. LEASE DESIGNATION AND SERIAL NUMBER: Fee
6. IF INDIAN, ALLOTTEE OR TRIBE NAME:
7. UNIT or CA AGREEMENT NAME:
8. WELL NAME and NUMBER: Bingham 10-1
9. API NUMBER: 4304330025
10. FIELD AND POOL, OR WILDCAT: Pineview Twin Creek

1. TYPE OF WELL: OIL WELL ☑ GAS WELL ☐ OTHER
2. NAME OF OPERATOR: Citation Oil & Gas Corp.
3. ADDRESS OF OPERATOR: P.O. Box 690688 CITY Houston STATE TX ZIP 77269-0688 PHONE NUMBER: (281) 517-7194
4. LOCATION OF WELL
FOOTAGES AT SURFACE: 682' FNL & 3279' FWL COUNTY: Summit
QTR/QTR, SECTION, TOWNSHIP, RANGE, MERIDIAN: NWNE 10 2N 7E STATE: UTAH

11. CHECK APPROPRIATE BOXES TO INDICATE NATURE OF NOTICE, REPORT, OR OTHER DATA

TYPE OF SUBMISSION	TYPE OF ACTION		
☑ NOTICE OF INTENT (Submit in Duplicate)	☐ ACIDIZE	☐ DEEPEN	☐ REPERFORATE CURRENT FORMATION
Approximate date work will start:	☐ ALTER CASING	☐ FRACTURE TREAT	☐ SIDETRACK TO REPAIR WELL
	☐ CASING REPAIR	☐ NEW CONSTRUCTION	☑ TEMPORARILY ABANDON
	☐ CHANGE TO PREVIOUS PLANS	☐ OPERATOR CHANGE	☐ TUBING REPAIR
	☐ CHANGE TUBING	☐ PLUG AND ABANDON	☐ VENT OR FLARE
☐ SUBSEQUENT REPORT (Submit Original Form Only)	☐ CHANGE WELL NAME	☐ PLUG BACK	☐ WATER DISPOSAL
Date of work completion:	☐ CHANGE WELL STATUS	☐ PRODUCTION (START/RESUME)	☐ WATER SHUT-OFF
	☐ COMMINGLE PRODUCING FORMATIONS	☐ RECLAMATION OF WELL SITE	☑ OTHER: Renewal of TA Status
	☐ CONVERT WELL TYPE	☐ RECOMPLETE - DIFFERENT FORMATION	

12. DESCRIBE PROPOSED OR COMPLETED OPERATIONS. Clearly show all pertinent details including dates, depths, volumes, etc.

Citation Oil & Gas Corp. requests approval to retain this wellbore in a Temporarily Abandoned status for recompletion to the Sliderock formation as a producer. If recompletion is unsuccessful, the well will be converted to a Nugget injection well. A Notice of Intent to PB and recomplete this well was approved by your office 12/16/2008 and a copy is attached.

COPY SENT TO OPERATOR
Date: 3.5.2009
Initials: KS

NAME (PLEASE PRINT): Debra Harris TITLE: Regulatory Compliance Coordinator
SIGNATURE: Debra Harris DATE: 2/2/2009

(This space for State use only)

APPROVED BY THE STATE OF UTAH DIVISION OF OIL, GAS, AND MINING
DATE: 3/2/09
BY: [illegible]
* Valid Through July 1, 2009

(5/2000) (See Instructions on Reverse Side)

Citation
OIL & GAS CORP.

February 9, 2009

State of Utah
Division of Oil, Gas and Mining
1594 West North Temple, Suite 1210
Sale Lake City, Utah 84114-5801

ATTN: Mr. Dustin Doucet, Petroleum Engineer

Re: Extended Shut-In and Temporarily Abandoned Well Requirements
Bingham 10-1; API 43-043-30025
Walker Hollow Unit 72; API 43-047-31227

Mr. Doucette,

Per your letter dated January 20, 2009 (copy attached) please find enclosed sundry notices requesting extension of shut-in and temporarily abandoned well status for the Bingham 10-1 and the Walker Hollow Unit 72 as referenced above.

We apologize for the oversight in submitting the sundries previously. Per the attached, the Walker Hollow Unit 72 should be converted to injection during the spring of 2009. The Bingham 10-1 is planned for recompletion with possible conversion should the recompletion be unsuccessful. I have enclosed a copy of the approved sundry for this project as well as the approved injection permit for the Walker Hollow Unit 72.

If you need additional information please contact me at (281) 517-7194 or via email at dharris@cogc.com.

Sincerely,

Debra Harris

Debra Harris
Regulatory Compliance Coordinator

/dkh
Enclosures

RECEIVED
FEB 10 2009
DIV. OF OIL, GAS & MINING

cc: CTR, SEW

FORM 9

STATE OF UTAH
DEPARTMENT OF NATURAL RESOURCES
DIVISION OF OIL, GAS AND MINING

5. LEASE DESIGNATION AND SERIAL NUMBER: Fee

SUNDRY NOTICES AND REPORTS ON WELLS

6. IF INDIAN, ALLOTTEE OR TRIBE NAME:

7. UNIT or CA AGREEMENT NAME:

Do not use this form for proposals to drill new wells, significantly deepen existing wells below current bottom-hole depth, reenter plugged wells, or to drill horizontal laterals. Use APPLICATION FOR PERMIT TO DRILL form for such proposals.

1. TYPE OF WELL: OIL WELL ☑ GAS WELL ☐ OTHER _____

8. WELL NAME and NUMBER: Bingham 10-1

2. NAME OF OPERATOR: Citation Oil & Gas Corp.

9. API NUMBER: 4304330025

3. ADDRESS OF OPERATOR: P O Box 690688 CITY Houston STATE TX ZIP 77269I

PHONE NUMBER: (281) 891-1000

10. FIELD AND POOL, OR WILDCAT: Pineview Twin Creek

4. LOCATION OF WELL

FOOTAGES AT SURFACE: 682 FNL & 3279 FWL

COUNTY: Summit

QTR/QTR, SECTION, TOWNSHIP, RANGE, MERIDIAN: NWNE 10 2N 7E

STATE: UTAH

11. CHECK APPROPRIATE BOXES TO INDICATE NATURE OF NOTICE, REPORT, OR OTHER DATA

TYPE OF SUBMISSION	TYPE OF ACTION		
☑ NOTICE OF INTENT (Submit in Duplicate)	☐ ACIDIZE	☐ DEEPEN	☐ REPERFORATE CURRENT FORMATION
Approximate date work will start:	☐ ALTER CASING	☐ FRACTURE TREAT	☐ SIDETRACK TO REPAIR WELL
	☐ CASING REPAIR	☐ NEW CONSTRUCTION	☐ TEMPORARILY ABANDON
	☐ CHANGE TO PREVIOUS PLANS	☐ OPERATOR CHANGE	☐ TUBING REPAIR
	☐ CHANGE TUBING	☐ PLUG AND ABANDON	☐ VENT OR FLARE
☐ SUBSEQUENT REPORT (Submit Original Form Only)	☐ CHANGE WELL NAME	☐ PLUG BACK	☐ WATER DISPOSAL
Date of work completion:	☐ CHANGE WELL STATUS	☐ PRODUCTION (START/RESUME)	☐ WATER SHUT-OFF
	☐ COMMINGLE PRODUCING FORMATIONS	☐ RECLAMATION OF WELL SITE	☐ OTHER: _____
	☐ CONVERT WELL TYPE	☑ RECOMPLETE - DIFFERENT FORMATION	

12. DESCRIBE PROPOSED OR COMPLETED OPERATIONS. Clearly show all pertinent details including dates, depths, volumes, etc.

Citation requests authorization to recomplete this well per the attached procedure and well bore diagrams.

COPY SENT TO OPERATOR
Date: 4.28.2009
Initials: KS

NAME (PLEASE PRINT) Mary Torres TITLE Permitting Analyst

SIGNATURE Mary Torres DATE 4/6/2009

(This space for State use only) APPROVED BY THE STATE OF UTAH DIVISION OF OIL, GAS, AND MINING
DATE: 4/23/09
BY: [signature]

(5/2000) (See Instructions on Reverse Side)

RECEIVED
APR 14 2009
DIV. OF OIL, GAS & MINING

WORKOVER PROCEDURE

PROJECT: Bingham 10-1: OAP in Sliderock, Stimulate, Commingle & Production Test

DRILLED & COMPLETED: 6/76 - 11/76 LAST WO: 3/97 – Reestablish production w/ ESP. Date SI unavailable – probably '97 or '98

LOCATION: 682' FNL & 3279' FWL, NW NE Sec. 10, T-2N, R-7E

FIELD: Pineview COUNTY: Summit STATE: UT

TD: 10380' KB PBTD: 9764' KB DATUM: 6761' GL KB to GL: 17'

CASING AND LINER RECORD

SIZE	WT / GRADE	DEPTH	CEMENT	HOLE SIZE	TOC	REMARKS
13 3/8"	61#	68'	250 sx	17 1/4"	SURF	CIRC'D
9 5/8"	36# / K-55	2500'	1100 sx	12 1/4"	SURF	CIRC'D
7"	23 & 26# / N-80 & S-95	10380'	2631 sx	8 3/8"	6350'	CBL (9/76)
4 1/2"	13.5 & 15.1# / L-80	9806'	580 sx	-	7346'	CIRC'D behind liner TOL @ 7346'

PRESENT FORMATION AND COMPLETION: Rich member of Twin Creek group (T→B): 9300' – 9316', 9355' – 9365', 9413' – 9440' & 9455' – 9469' w/ 2 spf (9/80)

TUBING: 172 jts 2 7/8" 6.5 ppf J-55 8rd EUE tbg + ESP pump assembly

MISC.: 9/11/95 – SI due to DH ESP failure. Test:: 30 BOPD + 45 MCFPD + 450 BWPD
3/4/94 – Convert from rod pump to ESP
2/94 – SI due to excessive rod & tbg failures
8/6/92 – Performed Diklor/Acid treatment via CT. Tag fill/PB @ 9759'

PROCEDURE

- ✓ ~~MI & Rack ± 2500' 2 7/8" 6.5 ppf J-55 8rd EUE tubing~~
- ✓ MI & Rack ± 9800' 2 3/8" 4.7 ppf N-80 'WS' tubing (Rental)
- ✓ Prior to WO, shoot static FL & report to Houston office

NOTE: Due to the length of SI and H_2S levels, the 7" casing may be suspect. Therefore, when the 4 1/2" PKR is in the well, it may be prudent to load & PT casing from the top of liner to surface. This step is NOT included.

1. MI RU PU. NU BOP. MI RU Spoolers. If necessary, kill well w/ clean produced water. Spool cable while TOOH – visually inspect & standback 2 7/8" 6.5# J-55 8rd production tbg. LD ESP equipment. ***Send cable & ESP equipment to have inspected.***
2. RIH w/ SN on 2 7/8" production tubing. MI RU Wellhead Scanalog. POOH inspecting production string – LD RB & GB tbg. Stand back YB & BB tbg.
3. PU & Talley RIH w/ 6 1/4" MT bit, 7" scraper & SN on 2 7/8" tbg to TOL @ 7346' – PU additional 2 7/8" tbg off of rack as necessary. POOH & LD ± 300' 2 7/8" tbg, SN, 7" scraper & bit – stand back ± 7050' 2 7/8" tbg.
4. PU & Tally RIH w/ 3 7/8" MT bit, 4 1/2" scraper & SN on 2 3/8" WS tbg to PBTD @ 9764' KB. CHC w/ clean produced water.

5. RU pump truck & spot ~42 Bbls 2% KCL water in 4 1/2" liner w/ 28 Bbls clean PW. PUH & set EOT @ ± 7300' – LD ~260' tbg & stand back remaining tbg. RU swab & swab FL down to static FL. RD swab. POOH w/ 2 3/8" tbg – stand back tbg.

6. MI RU WL. RU lubricator. Correlate to Dual Lateral Log run by Schlumberger on 8/16/76. RIH & perforate the following w/ 4 spf & 90° phasing (as per the Reservoir Department recommendation):

Formation	Interval	# Feet	# Perfs
Sliderock	9620' – 9626'	6	25
Sliderock	9606' – 9616'	10	41
Sliderock	9578' – 9594'	16	65
Sliderock	9534' – 9572'	38	153
Totals	**4 intervals**	**70 feet**	**284 perfs**

7. RD MO WL truck & lubricator.
8. MI RU hydrotester. PU & hydrotest RIH w/ 4 1/2" PKR (15.1#) & SN on 2 3/8" WS to 9000 psi (80% internal yield pressure). Set PKR @ ± 9500'.
9. MI RU Stimulation company. Acidize perfs as per service company recommendation. RD Stimulation company.
10. RU swab. Swab back load & swab test Sliderock (9534' – 9626'). Report results of swab/flow test. SI overnight for SITP.
11. RD swab. Release PKR & POOH LD 2 3/8" WS & PKR.
    - ✓ **Use swab Sliderock swab test results & production rates prior to SI to estimate pump sizing.**
12. PU & RIH w/ ESP test equipment & cable on 2 7/8" production tubing. Land BOM @ ± 7100'.
13. ND BOP. NU WH. Release rental equipment. Put well on production. ***NOTE: It may be necessary to curtail production from other wells due to lack of SWD capacity.***
14. Monitor production rates and FL's.
    - ➢ **If well is deemed economic, additional SWD capacity will be necessary and the Clark 4-1 will require additional pay opened in order to increase disposal capacity.**

CITATION OIL AND GAS CORPORATION
WELLBORE DIAGRAM AND INFORMATION
CURRENT WELLBORE DIAGRAM

Well Name:	Bingham 10-1	**Field:**	Pineview
Date:	2/11/09 JTT	**Location:**	NW/NE Sec. 10, T2N, R7E
County:	Summit	**State:**	Utah

Surface:	**682' FNL & 3279' FWL Sec. 10, T-2-N, R-7-E Summit County, UT**
Completed:	**11/7/76**
Elevation:	**6761' GL**
KB:	**17'**
API #:	**43-043-30025**

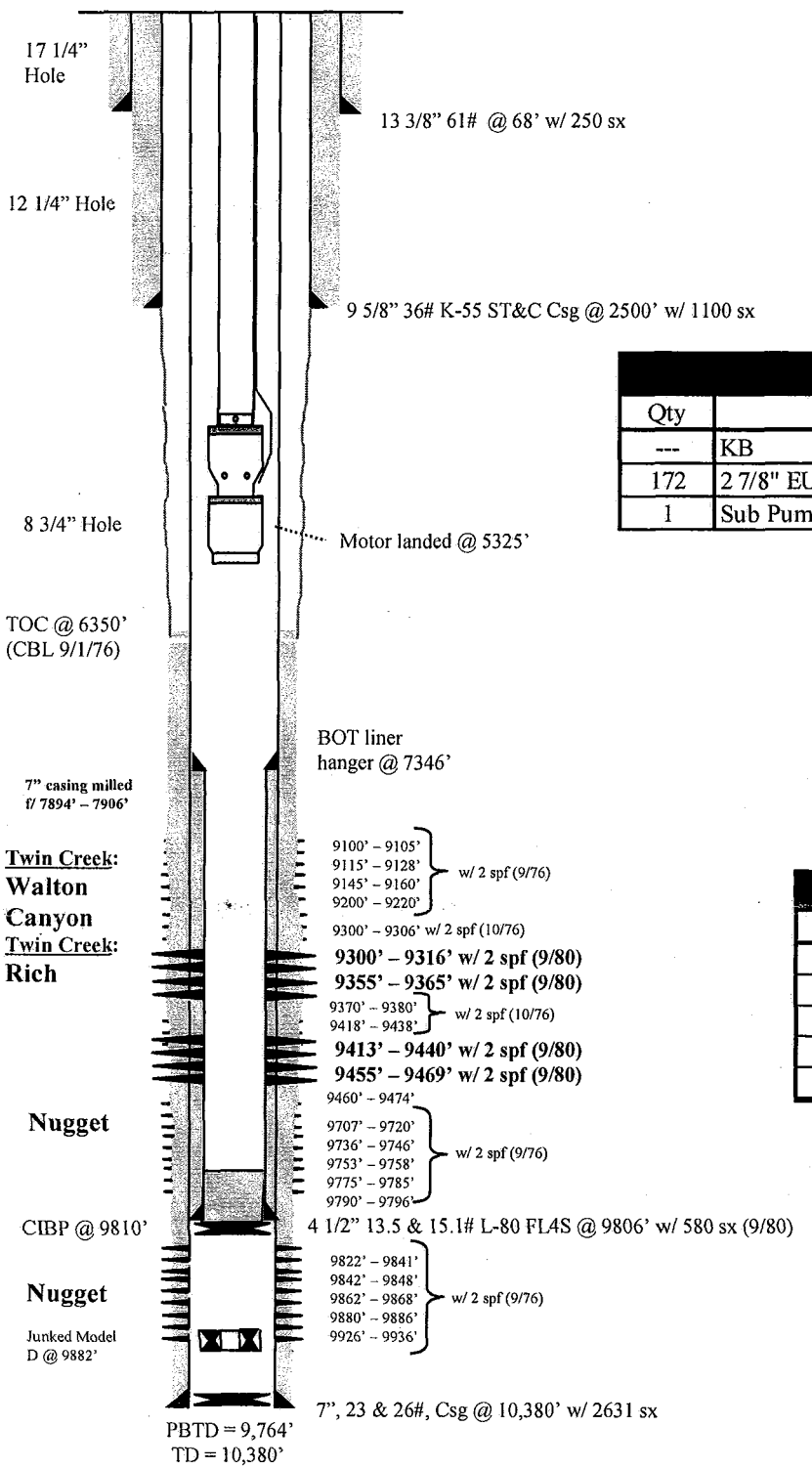

TUBING DETAIL

Qty	Description	Length	Depth
---	KB	17	17.00
172	2 7/8" EUE	5,275.25	5,292.25
1	Sub Pump Assy	32.75	5,325.00

7" CASING DETAIL

Size	Weight	Grade	Depth
7"	26	S-95	Surf – 25
7"	23	N-80	25 – 5701
7"	23	S-95	5701 – 7550
7"	26	S-95	7550 – 8320
7"	23	S-95	8320 – 10380

4 1/2" LINER DETAIL

Size	Weight	Grade	Length
4 ½"	13.5	L-80	Top 1314'
4 ½"	15.1	L-80	Bottom 1077'

CITATION OIL AND GAS CORPORATION
WELLBORE DIAGRAM AND INFORMATION
PROPOSED WELLBORE DIAGRAM

Well Name:	Bingham 10-1	**Field:**	Pineview
Date:	2/11/09 JTT	**Location:**	NW/NE Sec. 10, T2N, R7E
County:	Summit	**State:**	Utah

Surface:	**682' FNL & 3279' FWL Sec. 10, T-2-N, R-7-E Summit County, UT**
Completed:	**11/7/76**
Elevation:	**6761' GL**
KB:	**17'**
API #:	**43-043-30025**

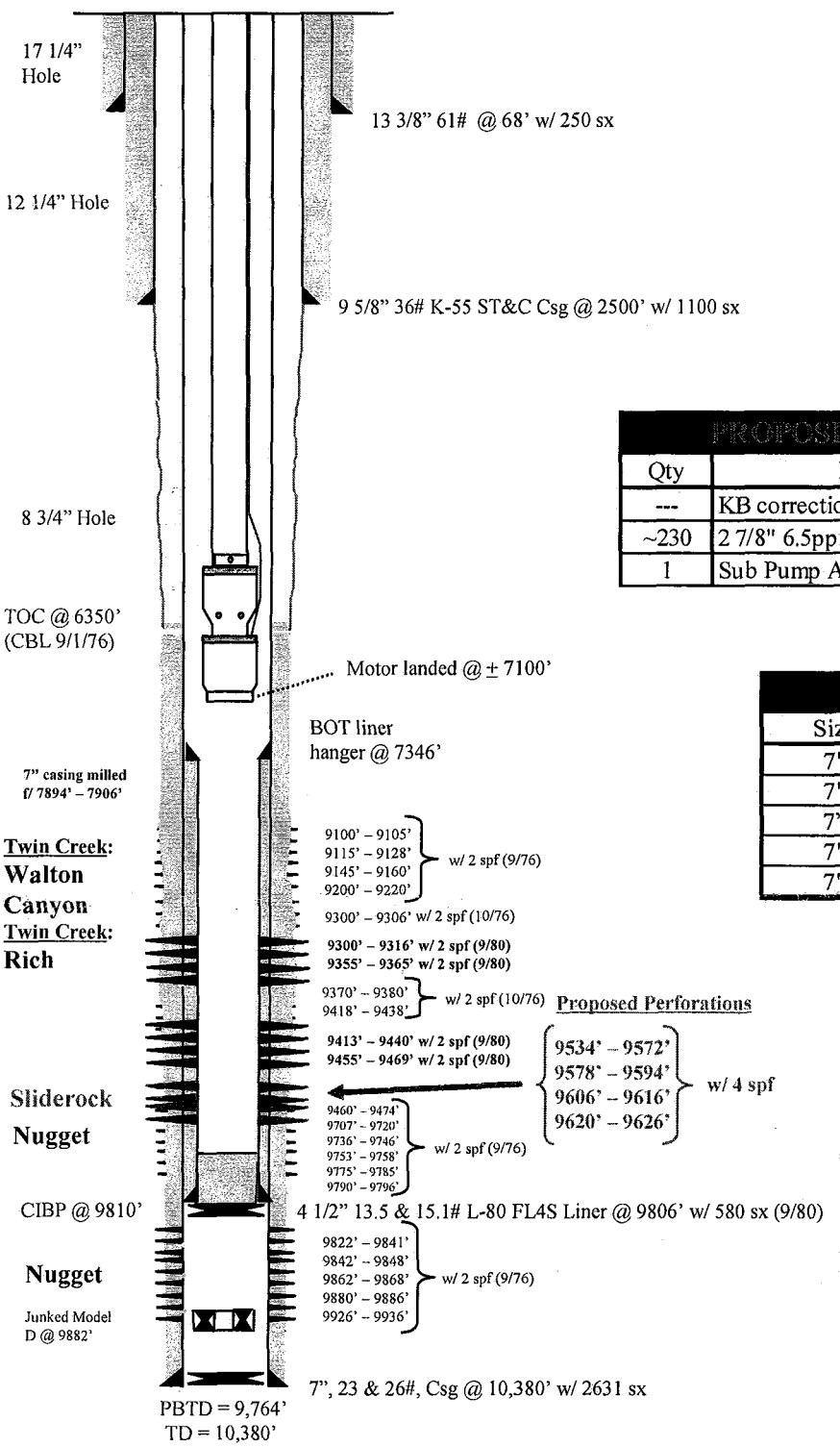

PROPOSED COMPLETION ASSEMBLY

Qty	Description	Length	Depth
---	KB correction	14	14.00
~230	2 7/8" 6.5ppf J-55 8rd EUE tbg	7,054.00	7,068.00
1	Sub Pump Assy	40.00	7,108.00

7" CASING DETAIL

Size	Weight	Grade	Depth
7"	26	S-95	Surf – 25
7"	23	N-80	25 – 5701
7"	23	S-95	5701 – 7550
7"	26	S-95	7550 – 8320
7"	23	S-95	8320 –10380

4 1/2" LINER DETAIL

Size	Weight	Grade	Length
4 ½"	13.5	L-80	Top 1314'
4 ½"	15.1	L-80	Bottom 1077'

FORM 9

STATE OF UTAH
DEPARTMENT OF NATURAL RESOURCES
DIVISION OF OIL, GAS AND MINING

5. LEASE DESIGNATION AND SERIAL NUMBER: Fee

SUNDRY NOTICES AND REPORTS ON WELLS

6. IF INDIAN, ALLOTTEE OR TRIBE NAME:

7. UNIT or CA AGREEMENT NAME:

Do not use this form for proposals to drill new wells, significantly deepen existing wells below current bottom-hole depth, reenter plugged wells, or to drill horizontal laterals. Use APPLICATION FOR PERMIT TO DRILL form for such proposals.

1. TYPE OF WELL: OIL WELL ☑ GAS WELL ☐ OTHER _____

8. WELL NAME and NUMBER: Bingham 10-1

2. NAME OF OPERATOR: Citation Oil & Gas Corp.

9. API NUMBER: 4304330025

3. ADDRESS OF OPERATOR: P O Box 690688 CITY Houston STATE TX ZIP 77269l

PHONE NUMBER: (281) 891-1000

10. FIELD AND POOL, OR WILDCAT: Pineview Twin Creek

4. LOCATION OF WELL

FOOTAGES AT SURFACE: 682 FNL & 3279 FWL

COUNTY: Summit

QTR/QTR, SECTION, TOWNSHIP, RANGE, MERIDIAN: NWNE 10 2N 7E

STATE: UTAH

11. CHECK APPROPRIATE BOXES TO INDICATE NATURE OF NOTICE, REPORT, OR OTHER DATA

TYPE OF SUBMISSION	TYPE OF ACTION		
☑ NOTICE OF INTENT (Submit in Duplicate)	☐ ACIDIZE	☐ DEEPEN	☐ REPERFORATE CURRENT FORMATION
Approximate date work will start: _____	☐ ALTER CASING	☐ FRACTURE TREAT	☐ SIDETRACK TO REPAIR WELL
	☐ CASING REPAIR	☐ NEW CONSTRUCTION	☐ TEMPORARILY ABANDON
	☐ CHANGE TO PREVIOUS PLANS	☐ OPERATOR CHANGE	☐ TUBING REPAIR
	☐ CHANGE TUBING	☐ PLUG AND ABANDON	☐ VENT OR FLARE
☐ SUBSEQUENT REPORT (Submit Original Form Only)	☐ CHANGE WELL NAME	☐ PLUG BACK	☐ WATER DISPOSAL
Date of work completion:	☐ CHANGE WELL STATUS	☐ PRODUCTION (START/RESUME)	☐ WATER SHUT-OFF
	☐ COMMINGLE PRODUCING FORMATIONS	☐ RECLAMATION OF WELL SITE	☐ OTHER: _____
_____	☐ CONVERT WELL TYPE	☑ RECOMPLETE - DIFFERENT FORMATION	

12. DESCRIBE PROPOSED OR COMPLETED OPERATIONS. Clearly show all pertinent details including dates, depths, volumes, etc.

Citation requests authorization to recomplete this well per the attached procedure and well bore diagrams.

MAY 0 5 2009
PRODUCTION DEPT.

NAME (PLEASE PRINT) Mary Torres TITLE Permitting Analyst

SIGNATURE Mary Torres DATE 4/6/2009

(This space for State use only) APPROVED BY THE STATE OF UTAH DIVISION OF OIL, GAS, AND MINING

DATE: 4/23/09

BY: [signature]

(See Instructions on Reverse Side)

RECEIVED
APR 1 4 2009
DIV. OF OIL, GAS & MINING

(5/2000)

WORKOVER PROCEDURE

PROJECT: Bingham 10-1: OAP in Sliderock, Stimulate, Commingle & Production Test

DRILLED & COMPLETED: 6/76 - 11/76 LAST WO: 3/97 – Reestablish production w/ ESP. Date SI unavailable – probably '97 or '98

LOCATION: 682' FNL & 3279' FWL, NW NE Sec. 10, T-2N, R-7E

FIELD: Pineview COUNTY: Summit STATE: UT

TD: 10380' KB PBTD: 9764' KB DATUM: 6761' GL KB to GL: 17'

CASING AND LINER RECORD

SIZE	WT / GRADE	DEPTH	CEMENT	HOLE SIZE	TOC	REMARKS
13 3/8"	61#	68'	250 sx	17 1/4"	SURF	CIRC'D
9 5/8"	36# / K-55	2500'	1100 sx	12 1/4"	SURF	CIRC'D
7"	23 & 26# / N-80 & S-95	10380'	2631 sx	8 3/8"	6350'	CBL (9/76)
4 1/2"	13.5 & 15.1# / L-80	9806'	580 sx	-	7346'	CIRC'D behind liner TOL @ 7346'

PRESENT FORMATION AND COMPLETION: Rich member of Twin Creek group (T→B): 9300' – 9316', 9355' – 9365', 9413' – 9440' & 9455' – 9469' w/ 2 spf (9/80)

TUBING: 172 jts 2 7/8" 6.5 ppf J-55 8rd EUE tbg + ESP pump assembly

MISC.: 9/11/95 – SI due to DH ESP failure. Test:: 30 BOPD + 45 MCFPD + 450 BWPD
3/4/94 – Convert from rod pump to ESP
2/94 – SI due to excessive rod & tbg failures
8/6/92 – Performed Diklor/Acid treatment via CT. Tag fill/PB @ 9759'

PROCEDURE

- ✓ MI & Rack ± 2500' 2 7/8" 6.5 ppf J-55 8rd EUE tubing
- ✓ MI & Rack ± 9800' 2 3/8" 4.7 ppf N-80 'WS' tubing (Rental)
- ✓ Prior to WO, shoot static FL & report to Houston office

NOTE: Due to the length of SI and H_2S levels, the 7" casing may be suspect. Therefore, when the 4 1/2" PKR is in the well, it may be prudent to load & PT casing from the top of liner to surface. This step is NOT included.

1. MI RU PU. NU BOP. MI RU Spoolers. If necessary, kill well w/ clean produced water. Spool cable while TOOH – visually inspect & standback 2 7/8" 6.5# J-55 8rd production tbg. LD ESP equipment. ***Send cable & ESP equipment to have inspected.***
2. RIH w/ SN on 2 7/8" production tubing. MI RU Wellhead Scanalog. POOH inspecting production string – LD RB & GB tbg. Stand back YB & BB tbg.
3. PU & Talley RIH w/ 6 1/4" MT bit, 7" scraper & SN on 2 7/8" tbg to TOL @ 7346' – PU additional 2 7/8" tbg off of rack as necessary. POOH & LD ± 300' 2 7/8" tbg, SN, 7" scraper & bit – stand back ± 7050' 2 7/8" tbg.
4. PU & Tally RIH w/ 3 7/8" MT bit, 4 1/2" scraper & SN on 2 3/8" WS tbg to PBTD @ 9764' KB. CHC w/ clean produced water.

5. RU pump truck & spot ~42 Bbls 2% KCL water in 4 1/2" liner w/ 28 Bbls clean PW. PUH & set EOT @ ± 7300' – LD ~260' tbg & stand back remaining tbg. RU swab & swab FL down to static FL. RD swab. POOH w/ 2 3/8" tbg – stand back tbg.

6. MI RU WL. RU lubricator. Correlate to Dual Lateral Log run by Schlumberger on 8/16/76. RIH & perforate the following w/ 4 spf & 90° phasing (as per the Reservoir Department recommendation):

Formation	Interval	# Feet	# Perfs
Sliderock	9620' – 9626'	6	25
Sliderock	9606' – 9616'	10	41
Sliderock	9578' – 9594'	16	65
Sliderock	9534' – 9572'	38	153
Totals	**4 intervals**	**70 feet**	**284 perfs**

7. RD MO WL truck & lubricator.
8. MI RU hydrotester. PU & hydrotest RIH w/ 4 1/2" PKR (15.1#) & SN on 2 3/8" WS to 9000 psi (80% internal yield pressure). Set PKR @ ± 9500'.
9. MI RU Stimulation company. Acidize perfs as per service company recommendation. RD Stimulation company.
10. RU swab. Swab back load & swab test Sliderock (9534' – 9626'). Report results of swab/flow test. SI overnight for SITP.
11. RD swab. Release PKR & POOH LD 2 3/8" WS & PKR.
    - ✓ **Use swab Sliderock swab test results & production rates prior to SI to estimate pump sizing.**
12. PU & RIH w/ ESP test equipment & cable on 2 7/8" production tubing. Land BOM @ ± 7100'.
13. ND BOP. NU WH. Release rental equipment. Put well on production. ***NOTE: It may be necessary to curtail production from other wells due to lack of SWD capacity.***
14. Monitor production rates and FL's.
    - ➢ **If well is deemed economic, additional SWD capacity will be necessary and the Clark 4-1 will require additional pay opened in order to increase disposal capacity.**

CITATION OIL AND GAS CORPORATION
WELLBORE DIAGRAM AND INFORMATION
CURRENT WELLBORE DIAGRAM

Well Name:	Bingham 10-1	**Field:**	Pineview
Date:	2/11/09 JTT	**Location:**	NW/NE Sec. 10, T2N, R7E
County:	Summit	**State:**	Utah

Surface:	**682' FNL & 3279' FWL Sec. 10, T-2-N, R-7-E Summit County, UT**
Completed:	**11/7/76**
Elevation:	**6761' GL**
KB:	**17'**
API #:	**43-043-30025**

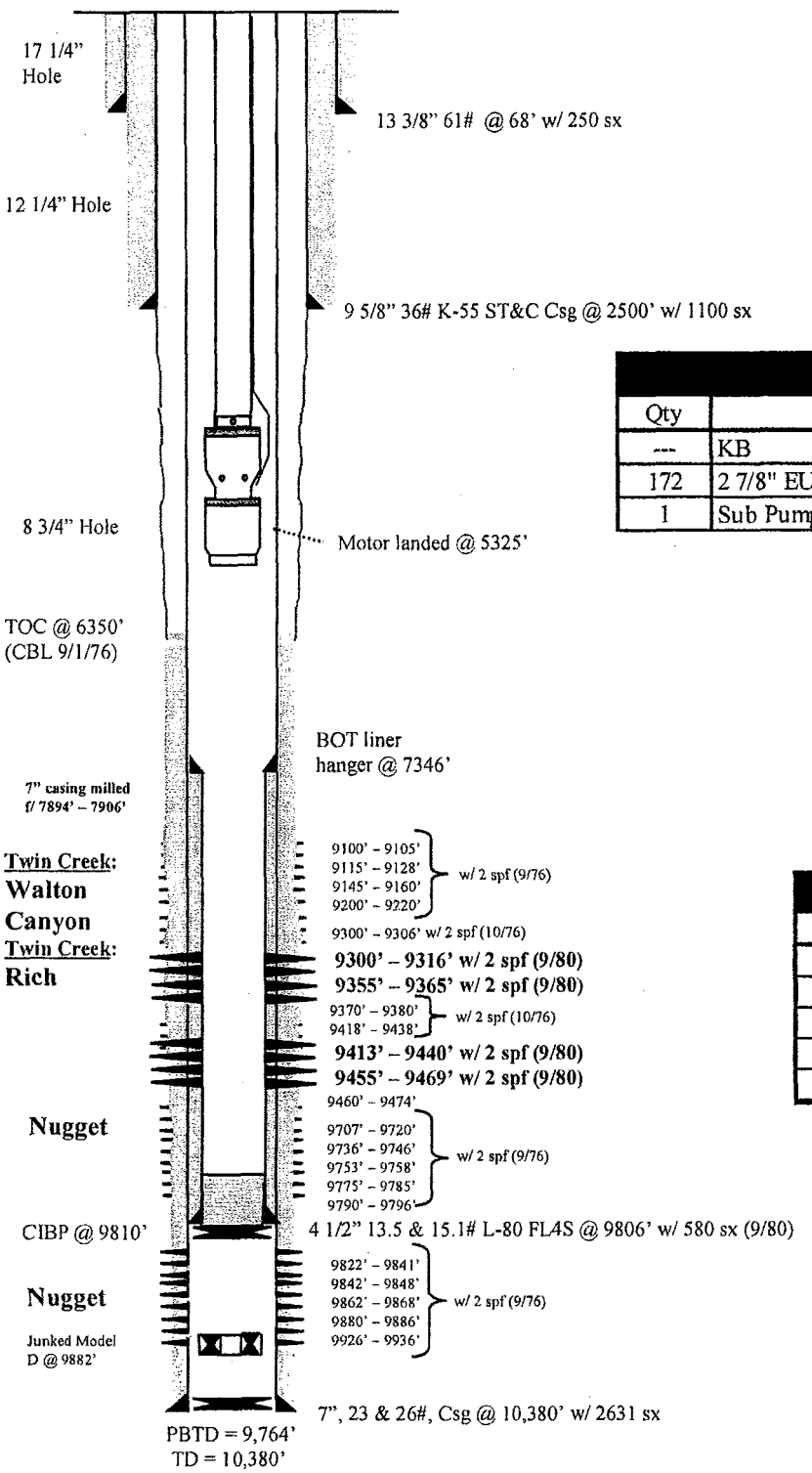

TUBING DETAIL

Qty	Description	Length	Depth
---	KB	17	17.00
172	2 7/8" EUE	5,275.25	5,292.25
1	Sub Pump Assy	32.75	5,325.00

7" CASING DETAIL

Size	Weight	Grade	Depth
7"	26	S-95	Surf – 25
7"	23	N-80	25 – 5701
7"	23	S-95	5701 – 7550
7"	26	S-95	7550 – 8320
7"	23	S-95	8320 –10380

4 1/2" LINER DETAIL

Size	Weight	Grade	Length
4 ½"	13.5	L-80	Top 1314'
4 ½"	15.1	L-80	Bottom 1077'

CITATION OIL AND GAS CORPORATION
WELLBORE DIAGRAM AND INFORMATION
PROPOSED WELLBORE DIAGRAM

Well Name:	Bingham 10-1	**Field:**	Pineview
Date:	2/11/09 JTT	**Location:**	NW/NE Sec. 10, T2N, R7E
County:	Summit	**State:**	Utah

Surface:	**682' FNL & 3279' FWL Sec. 10, T-2-N, R-7-E Summit County, UT**
Completed:	**11/7/76**
Elevation:	**6761' GL**
KB:	**17'**
API #:	**43-043-30025**

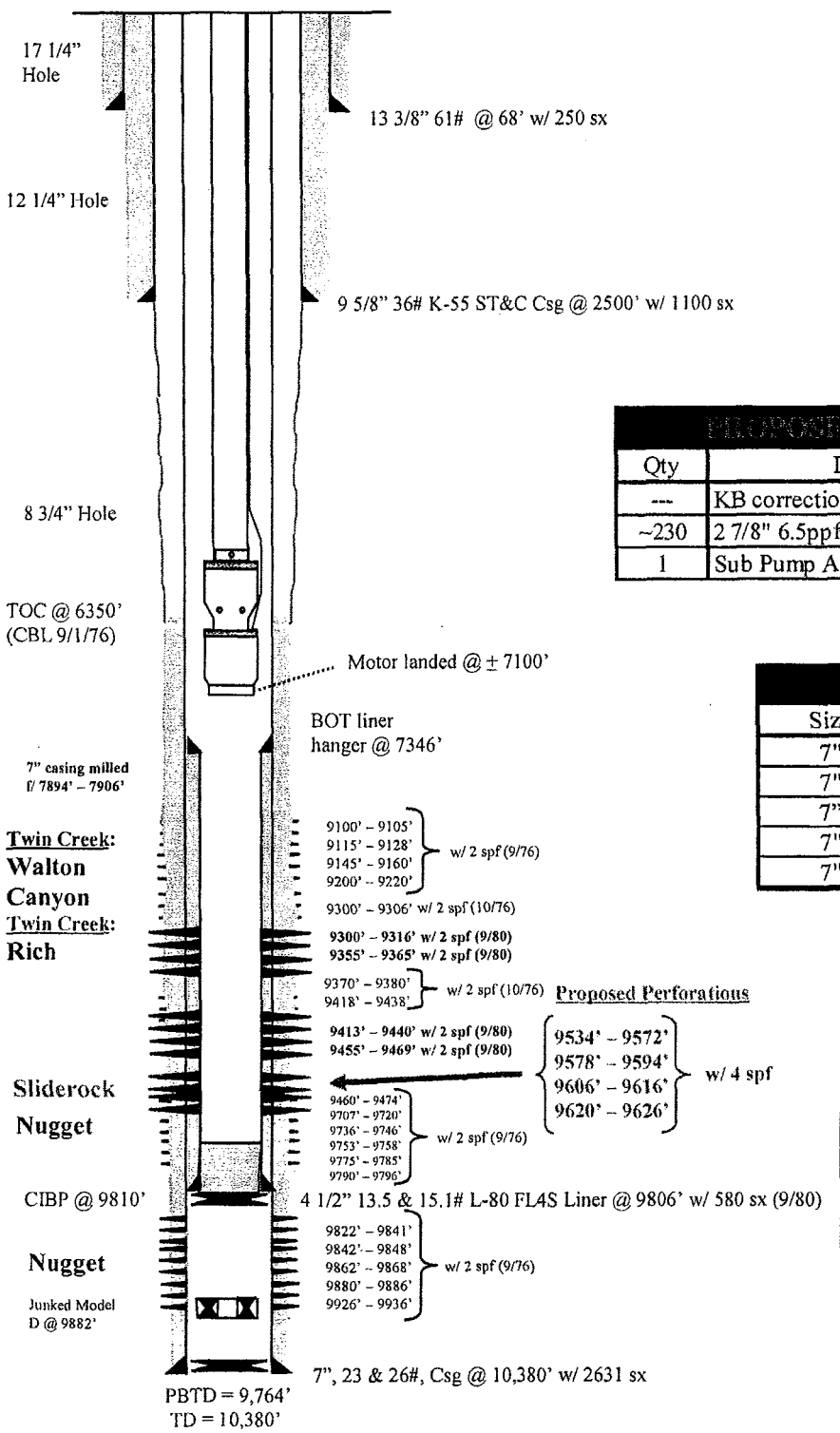

PROPOSED COMPLETION ASSEMBLY

Qty	Description	Length	Depth
---	KB correction	14	14.00
~230	2 7/8" 6.5ppf J-55 8rd EUE tbg	7,054.00	7,068.00
1	Sub Pump Assy	40.00	7,108.00

7" CASING DETAIL

Size	Weight	Grade	Depth
7"	26	S-95	Surf – 25
7"	23	N-80	25 – 5701
7"	23	S-95	5701 – 7550
7"	26	S-95	7550 – 8320
7"	23	S-95	8320 – 10380

4 1/2" LINER DETAIL

Size	Weight	Grade	Length
4 ½"	13.5	L-80	Top 1314'
4 ½"	15.1	L-80	Bottom 1077'

FORM 9

STATE OF UTAH
DEPARTMENT OF NATURAL RESOURCES
DIVISION OF OIL, GAS AND MINING

5. LEASE DESIGNATION AND SERIAL NUMBER: Fee

SUNDRY NOTICES AND REPORTS ON WELLS

6. IF INDIAN, ALLOTTEE OR TRIBE NAME:

7. UNIT or CA AGREEMENT NAME:

Do not use this form for proposals to drill new wells, significantly deepen existing wells below current bottom-hole depth, reenter plugged wells, or to drill horizontal laterals. Use APPLICATION FOR PERMIT TO DRILL form for such proposals.

1. TYPE OF WELL: OIL WELL ☑ GAS WELL ☐ OTHER

8. WELL NAME and NUMBER: Bingham 10-1

2. NAME OF OPERATOR: Citation Oil & Gas Corp.

9. API NUMBER: 4304330025

3. ADDRESS OF OPERATOR: P.O. Box 690688 CITY Houston STATE TX ZIP 77269-0688 PHONE NUMBER: (281) 517-7194

10. FIELD AND POOL, OR WILDCAT: Pineview Twin Creek

4. LOCATION OF WELL

FOOTAGES AT SURFACE: 682' FNL & 3279' FWL COUNTY: Summit

QTR/QTR, SECTION, TOWNSHIP, RANGE, MERIDIAN: NWNE 10 2N 7E STATE: UTAH

11. CHECK APPROPRIATE BOXES TO INDICATE NATURE OF NOTICE, REPORT, OR OTHER DATA

TYPE OF SUBMISSION	TYPE OF ACTION		
☑ NOTICE OF INTENT (Submit in Duplicate)	☐ ACIDIZE	☐ DEEPEN	☐ REPERFORATE CURRENT FORMATION
Approximate date work will start:	☐ ALTER CASING	☐ FRACTURE TREAT	☐ SIDETRACK TO REPAIR WELL
	☐ CASING REPAIR	☐ NEW CONSTRUCTION	☑ TEMPORARILY ABANDON
	☐ CHANGE TO PREVIOUS PLANS	☐ OPERATOR CHANGE	☐ TUBING REPAIR
	☐ CHANGE TUBING	☐ PLUG AND ABANDON	☐ VENT OR FLARE
☐ SUBSEQUENT REPORT (Submit Original Form Only)	☐ CHANGE WELL NAME	☐ PLUG BACK	☐ WATER DISPOSAL
Date of work completion:	☐ CHANGE WELL STATUS	☐ PRODUCTION (START/RESUME)	☐ WATER SHUT-OFF
	☐ COMMINGLE PRODUCING FORMATIONS	☐ RECLAMATION OF WELL SITE	☑ OTHER: Renewal of TA Status
	☐ CONVERT WELL TYPE	☐ RECOMPLETE - DIFFERENT FORMATION	

12. DESCRIBE PROPOSED OR COMPLETED OPERATIONS. Clearly show all pertinent details including dates, depths, volumes, etc.

Citation Oil & Gas Corp. requests approval to retain this wellbore in a Temporarily Abandoned status for recompletion to the Sliderock formation as a producer. Notice of Intent for the recompletion was approved by your office 4/23/2009 and a copy is attached for your review. We expect this work to commence in September, 2009.

COPY SENT TO OPERATOR
Date: 8·12·2009
Initials: KS

NAME (PLEASE PRINT) Debra Harris TITLE Regulatory Compliance Coordinator

SIGNATURE Debra Harris DATE 8/4/2009

(This space for State use only) APPROVED BY THE STATE OF UTAH DIVISION OF OIL, GAS, AND MINING
DATE: 8/11/09
BY: [signature]
* Valid through 10/1/09

RECEIVED
AUG 10 2009
DIV. OF OIL, GAS & MINING

(5/2000) (See Instructions on Reverse Side)

FORM 9

STATE OF UTAH
DEPARTMENT OF NATURAL RESOURCES
DIVISION OF OIL, GAS AND MINING

5. LEASE DESIGNATION AND SERIAL NUMBER: Fee

SUNDRY NOTICES AND REPORTS ON WELLS

6. IF INDIAN, ALLOTTEE OR TRIBE NAME:

7. UNIT or CA AGREEMENT NAME:

Do not use this form for proposals to drill new wells, significantly deepen existing wells below current bottom-hole depth, reenter plugged wells, or to drill horizontal laterals. Use APPLICATION FOR PERMIT TO DRILL form for such proposals.

1. TYPE OF WELL: OIL WELL ☑ GAS WELL ☐ OTHER _____

8. WELL NAME and NUMBER: Bingham 10-1

2. NAME OF OPERATOR: Citation Oil & Gas Corp.

9. API NUMBER: 4304330025

3. ADDRESS OF OPERATOR: P.O. Box 690688 CITY Houston STATE TX ZIP 77269-0688 (281) 891-1576

10. FIELD AND POOL, OR WILDCAT: Pineview Twin Creek

4. LOCATION OF WELL

FOOTAGES AT SURFACE: 682' FNL & 3279' FWL

COUNTY: Summit

QTR/QTR, SECTION, TOWNSHIP, RANGE, MERIDIAN: NWNE 10 2N 7E

STATE: UTAH

11. CHECK APPROPRIATE BOXES TO INDICATE NATURE OF NOTICE, REPORT, OR OTHER DATA

TYPE OF SUBMISSION	TYPE OF ACTION		
☑ NOTICE OF INTENT (Submit in Duplicate)	☐ ACIDIZE	☐ DEEPEN	☐ REPERFORATE CURRENT FORMATION
Approximate date work will start:	☐ ALTER CASING	☐ FRACTURE TREAT	☐ SIDETRACK TO REPAIR WELL
	☐ CASING REPAIR	☐ NEW CONSTRUCTION	☐ TEMPORARILY ABANDON
	☐ CHANGE TO PREVIOUS PLANS	☐ OPERATOR CHANGE	☐ TUBING REPAIR
	☐ CHANGE TUBING	☐ PLUG AND ABANDON	☐ VENT OR FLARE
☐ SUBSEQUENT REPORT (Submit Original Form Only)	☐ CHANGE WELL NAME	☐ PLUG BACK	☐ WATER DISPOSAL
Date of work completion:	☐ CHANGE WELL STATUS	☐ PRODUCTION (START/RESUME)	☐ WATER SHUT-OFF
	☐ COMMINGLE PRODUCING FORMATIONS	☐ RECLAMATION OF WELL SITE	☑ OTHER: Status update
	☐ CONVERT WELL TYPE	☐ RECOMPLETE - DIFFERENT FORMATION	

12. DESCRIBE PROPOSED OR COMPLETED OPERATIONS. Clearly show all pertinent details including dates, depths, volumes, etc.

Citation Oil & Gas Corp. requests an extension of your prior approval to retain this wellbore in a Temporarily Abandoned status for conversion to saltwater disposal in order to increase oil production by upsizing pumps in the surrounding wells in the Pineview field.

During September and October, 2009 an attempt was made to recomplete this well to a Sliderock producer; however, that attempt was not successful but a decision has been made to convert the well to saltwater disposal. The permit application for conversion to SWD is currently being prepared for submittal to your office.

COPY SENT TO OPERATOR
Date: 1·5·2010
Initials: KS

NAME (PLEASE PRINT): Debra Harris TITLE: Regulatory Compliance Coordinator

SIGNATURE: Debra Harris DATE: 12/9/2009

(This space for State use only) REQUEST DENIED
Utah Division of
Oil, Gas and Mining
Date: 12/29/09
By: [signature]

RECEIVED
DEC 14 2009
DIV. OF OIL, GAS & MINING

(5/2000) (See Instructions on Reverse Side)

* Provide showing of integrity with request
** Subsequent Sundry of Sept/Oct 2009 recompletion work should be submitted

FORM 9

STATE OF UTAH
DEPARTMENT OF NATURAL RESOURCES
DIVISION OF OIL, GAS AND MINING

5. LEASE DESIGNATION AND SERIAL NUMBER: Fee

SUNDRY NOTICES AND REPORTS ON WELLS

6. IF INDIAN, ALLOTTEE OR TRIBE NAME:

7. UNIT or CA AGREEMENT NAME:

Do not use this form for proposals to drill new wells, significantly deepen existing wells below current bottom-hole depth, reenter plugged wells, or to drill horizontal laterals. Use APPLICATION FOR PERMIT TO DRILL form for such proposals.

1. TYPE OF WELL: OIL WELL ☑ GAS WELL ☐ OTHER

8. WELL NAME and NUMBER: Bingham 10-1

2. NAME OF OPERATOR: Citation Oil & Gas Corp.

9. API NUMBER: 4304330025

3. ADDRESS OF OPERATOR: P O Box 690688 CITY Houston STATE TX ZIP 77269I

PHONE NUMBER: (281) 891-1565

10. FIELD AND POOL, OR WILDCAT: Pineview Twin Creek

4. LOCATION OF WELL

FOOTAGES AT SURFACE: 682 FNL & 3279 FWL

COUNTY: Summit

QTR/QTR, SECTION, TOWNSHIP, RANGE, MERIDIAN: NWNE 10 2N 7E

STATE: UTAH

11. CHECK APPROPRIATE BOXES TO INDICATE NATURE OF NOTICE, REPORT, OR OTHER DATA

TYPE OF SUBMISSION	TYPE OF ACTION		
☐ NOTICE OF INTENT (Submit in Duplicate)	☐ ACIDIZE	☐ DEEPEN	☐ REPERFORATE CURRENT FORMATION
Approximate date work will start:	☐ ALTER CASING	☐ FRACTURE TREAT	☐ SIDETRACK TO REPAIR WELL
	☐ CASING REPAIR	☐ NEW CONSTRUCTION	☐ TEMPORARILY ABANDON
	☐ CHANGE TO PREVIOUS PLANS	☐ OPERATOR CHANGE	☐ TUBING REPAIR
	☐ CHANGE TUBING	☐ PLUG AND ABANDON	☐ VENT OR FLARE
☑ SUBSEQUENT REPORT (Submit Original Form Only)	☐ CHANGE WELL NAME	☐ PLUG BACK	☐ WATER DISPOSAL
Date of work completion:	☐ CHANGE WELL STATUS	☐ PRODUCTION (START/RESUME)	☐ WATER SHUT-OFF
	☐ COMMINGLE PRODUCING FORMATIONS	☐ RECLAMATION OF WELL SITE	☑ OTHER: OAP in Sliderock
	☐ CONVERT WELL TYPE	☐ RECOMPLETE - DIFFERENT FORMATION	

12. DESCRIBE PROPOSED OR COMPLETED OPERATIONS. Clearly show all pertinent details including dates, depths, volumes, etc.

Citation MIRU. Tagged PBTS @ 9765. RU pump truck and spotted 42 bbls 2% KCL followed w/ 28 bbls PW. RIH & shot first interval (9534-9572) 153 perfs, shot second (9578-9594) 65 perfs, shot third (9606-9616) 41 perfs, shot fourth (9620-9626) 25 perfs, 284 perfs total. The well never reached economic production. The test was 0 BO + 0 MCF + 1190 BWPD (Oct 29, 2009). Application to convert to SWD is forthcoming.

RECEIVED
JAN 26 2010
DIV. OF OIL, GAS & MINING

NAME (PLEASE PRINT) Bridget Lisenbe TITLE Permitting Analyst

SIGNATURE Bridget Lisenbe DATE 1/21/10

(This space for State use only)

UIC FORM 1

STATE OF UTAH
DEPARTMENT OF NATURAL RESOURCES
DIVISION OF OIL, GAS AND MINING

APPLICATION FOR INJECTION WELL

Name of Operator Citation Oil & Gas Corp.	Utah Account Number N 265	Well Name and Number Bingham 10-1
Address of Operator P O Box 690688 CITY Houston STATE TX ZIP 77269	Phone Number (281) 891-1565	API Number 4304330025
Location of Well Footage : 682 FNL & 3279 FWL County : Summit QQ, Section, Township, Range: NWNE 10 2N 7E State : UTAH		Field or Unit Name Pineview Twin Creek Lease Designation and Number Fee

Is this application for expansion of an existing project?	Yes ☐	No ☑
Will the proposed well be used for: Enhanced Recovery?	Yes ☐	No ☑
Disposal?	Yes ☑	No ☐
Storage?	Yes ☐	No ☑
Is this application for a new well to be drilled?	Yes ☐	No ☑
If this application is for an existing well, has a casing test been performed?	Yes ☐	No ☑
Date of test: _____		

Proposed injection interval: from 9,300 to 10,268

Proposed maximum injection: rate 10,200 bpd pressure 1,100 psig

Proposed injection zone contains oil ☑, gas ☐, and / or fresh water ☐ within ½ mile of the well.

List of attachments: _____

ATTACH ADDITIONAL INFORMATION AS REQUIRED BY CURRENT UTAH OIL AND GAS CONSERVATION GENERAL RULES

I hereby certify that this report is true and complete to the best of my knowledge.

Name (Please Print) Bridget Lisenbe Title Permitting Analyst

Signature Bridget Lisenbe Date 11/21/10

(5/2002)

RECEIVED
JAN 26 2010
DIV. OF OIL, GAS & MINING

I HEREBY CERTIFY THAT A TRUE AND CORRECT COPY OF THE APPLICATION TO CONVERT TO INJECTION THE BINGHAM 10-1 WELL LOCATED IN THE PINEVIEW FIELD, SUMMIT COUNTY, UTAH WAS PLACED IN THE U. S. MAIL, ALL POSTAGE PRE-PAID AND PROPERLY ADDRESSED AS FOLLOWS, TO THE LIST OF SURFACE OWNERS AND OFFSET OPERATORS WITHIN THE ONE-HALF MILE AREA OF REVIEW AS SHOWN BELOW, ON THIS THE 21st DAY OF January 2010.

Bridget Lisenbe
PERMITTING ANALYST
CITATION OIL & GAS CORP.

SURFACE OWNER – (1/2 mile radius):

Section 2, T2N-R7E (ALL)
Section 10, T2N-R7E (ALL)
Section 11, T2N-R7E (ALL)
Section 3, T2N-R7E (SE)

B. A. Bingham & Sons, LLC
3523 W 8000 N
Honeyville, UT 84314

Section 3, T2N-R7E (SW)

Margaret Louise Bowman
3625 E. Chalk Creek Rd.
Coalville, UT 84017

OFFSET OPERATORS (1/2 mile radius):

XTO Energy Inc.
810 Houston St.
Fort Worth, TX 76102

Eland Energy, Inc.
8150 North Central Expressway,
Suite 400
Dallas, TX 75206

Eland Energy, Inc.
13455 Noel Rd.
Two Galleria Tower, Suite 2000
Dallas, TX 75240

Lochinvar Energy, LP
203 East Interstate 30, Suite 200
Rockwall, TX 75087

Dominion Oklahoma Texas
Exploration & Production, Inc.
14000 Quail Springs Parkway,
Suite 600
Oklahoma City, OK 73134-2600

Ancon Partnership Ltd.
1331 Lamar, Suite 900
Houston, TX 77010-3088

Concise Oil and Gas Partnership
4582 South Ulster Street Parkway,
Suite 1700
Denver, CO 80237

Equity Oil Company
600 17th St., Suite 2110-S
Denver, CO 80202

Equity Oil Company
C/O Whiting Petroleum Corp.
1700 Broadway, Suite 2300
Denver, CO 80290-2300

The Prospective Investment and Trading Company, Ltd., Pitco Investment, Ltd., Jag Oil Limited Partnership, AS IS Investments, LLC, & High Hopes Oil Company, LLC
P. O. Box 4190
Scottsdale, AZ 85261

Jag Oil Limited Partnership
P. O. Box 700630
Tulsa, OK 74170-0630

Wagner Oil Company
500 Commerce St., Suite 600
Fort Worth, TX 76102

American Exploration Company
1331 Lamar, Suite 900
Houston, TX 77010-3088

Conquest Exploration Company
4201 FM 1960 West, Suite 500
Houston, TX 77068

Conquest Exploration Company
P. O. Box 297166
Houston, TX 77297-0166

Exxon Mobil Corporation
5959 Las Colinas Blvd.
Irving, TX 75039-4202

BP America Inc.
501 Westlake Park Blvd.
Houston, TX 77079-2604

Anadarko Petroleum Corporation
P. O. Box 1330
Houston, TX 77251-1330

Bingham 10-1 well, Summit Co., UT

There are no unleased mineral interest owners in the ½ mile radius of the Bingham 10-1 well.

There are no outside operators of active (not plugged) wells within the ½ mile radius of the Bingham 10-1 well.

Leasehold Ownership for the ½ mile radius surrounding the Bingham 10-1 well (80.08422) located in T2N-R7E Sec 10: NWNE

XTO Energy Inc. 810 Houston St. Fort Worth, TX 76102	Eland Energy, Inc. 8150 North Central Expressway, Suite 400 Dallas, TX 75206	Eland Energy, Inc. 13455 Noel Rd. Two Galleria Tower, Suite 2000 Dallas, TX 75240
Lochinvar Energy, LP 203 East Interstate 30, Suite 200 Rockwall, TX 75087	Dominion Oklahoma Texas Exploration & Production, Inc. 14000 Quail Springs Parkway, Suite 600 Oklahoma City, OK 73134-2600	Ancon Partnership Ltd. 1331 Lamar, Suite 900 Houston, TX 77010-3088
Concise Oil and Gas Partnership 4582 South Ulster Street Parkway, Suite 1700 Denver, CO 80237	Equity Oil Company 600 17th St., Suite 2110-S Denver, CO 80202	Equity Oil Company C/O Whiting Petroleum Corp. 1700 Broadway, Suite 2300 Denver, CO 80290-2300
The Prospective Investment and Trading Company, Ltd., Pitco Investment, Ltd., Jag Oil Limited Partnership, AS IS Investments, LLC, & High Hopes Oil Company, LLC P. O. Box 4190 Scottsdale, AZ 85261	Jag Oil Limited Partnership P. O. Box 700630 Tulsa, OK 74170-0630	Wagner Oil Company 500 Commerce St., Suite 600 Fort Worth, TX 76102
American Exploration Company 1331 Lamar, Suite 900 Houston, TX 77010-3088	Conquest Exploration Company 4201 FM 1960 West, Suite 500 Houston, TX 77068	Conquest Exploration Company P. O. Box 297166 Houston, TX 77297-0166
Exxon Mobil Corporation 5959 Las Colinas Blvd. Irving, TX 75039-4202	BP America Inc. 501 Westlake Park Blvd. Houston, TX 77079-2604	Anadarko Petroleum Corporation P. O. Box 1330 Houston, TX 77251-1330

Surface Ownership within the ½ mile radius of the Bingham 10 -1 well is as follows:

T2N-R7E Sec 2: ALL
Sec 10: ALL
Sec 11: ALL

B. A. Bingham & Sons, LLC
3523 W 8000 N
Honeyville, UT 84314

T2N-R7E Sec 3: SE

B. A. Bingham & Sons, LLC
3523 W 8000 N
Honeyville, UT 84314

T2N-R7E Sec 3: SW

Margaret Louise Bowman
3625 E. Chalk Creek Rd.
Coalville, UT 84017

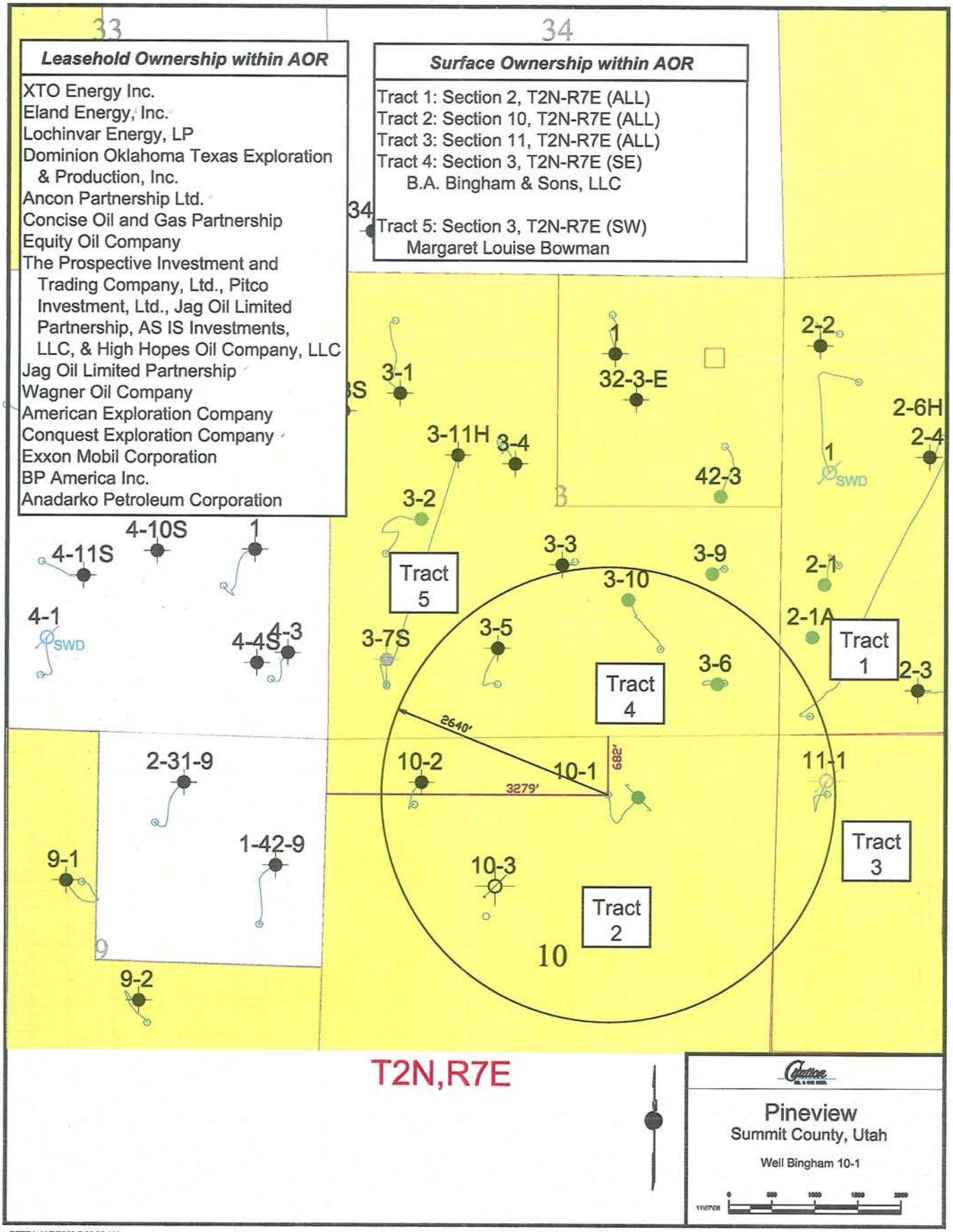
33
34
Leasehold Ownership within AOR
XTO Energy Inc.
Eland Energy, Inc.
Lochinvar Energy, LP
Dominion Oklahoma Texas Exploration & Production, Inc.
Ancon Partnership Ltd.
Concise Oil and Gas Partnership
Equity Oil Company
The Prospective Investment and Trading Company, Ltd., Pitco Investment, Ltd., Jag Oil Limited Partnership, AS IS Investments, LLC, & High Hopes Oil Company, LLC
Jag Oil Limited Partnership
Wagner Oil Company
American Exploration Company
Conquest Exploration Company
Exxon Mobil Corporation
BP America Inc.
Anadarko Petroleum Corporation
Surface Ownership within AOR
Tract 1: Section 2, T2N-R7E (ALL)
Tract 2: Section 10, T2N-R7E (ALL)
Tract 3: Section 11, T2N-R7E (ALL)
Tract 4: Section 3, T2N-R7E (SE)
B.A. Bingham & Sons, LLC
Tract 5: Section 3, T2N-R7E (SW)
Margaret Louise Bowman
34
3-1
1
32-3-E
2-2
2-6H
2-4
3-11H
3-4
42-3
1
SWD
3-2
4-10S
1
4-11S
3-3
3-9
2-1
Tract 5
3-10
4-1
SWD
4-4S
4-3
3-7S
3-5
2-1A
Tract 1
2-3
3-6
Tract 4
2640'
682'
2-31-9
10-2
10-1
3279'
11-1
Tract 3
9-1
1-42-9
10-3
Tract 2
10
9
9-2
T2N,R7E
Pineview
Summit County, Utah
Well Bingham 10-1
PETRA 11/7/2008 7:23:38 AM

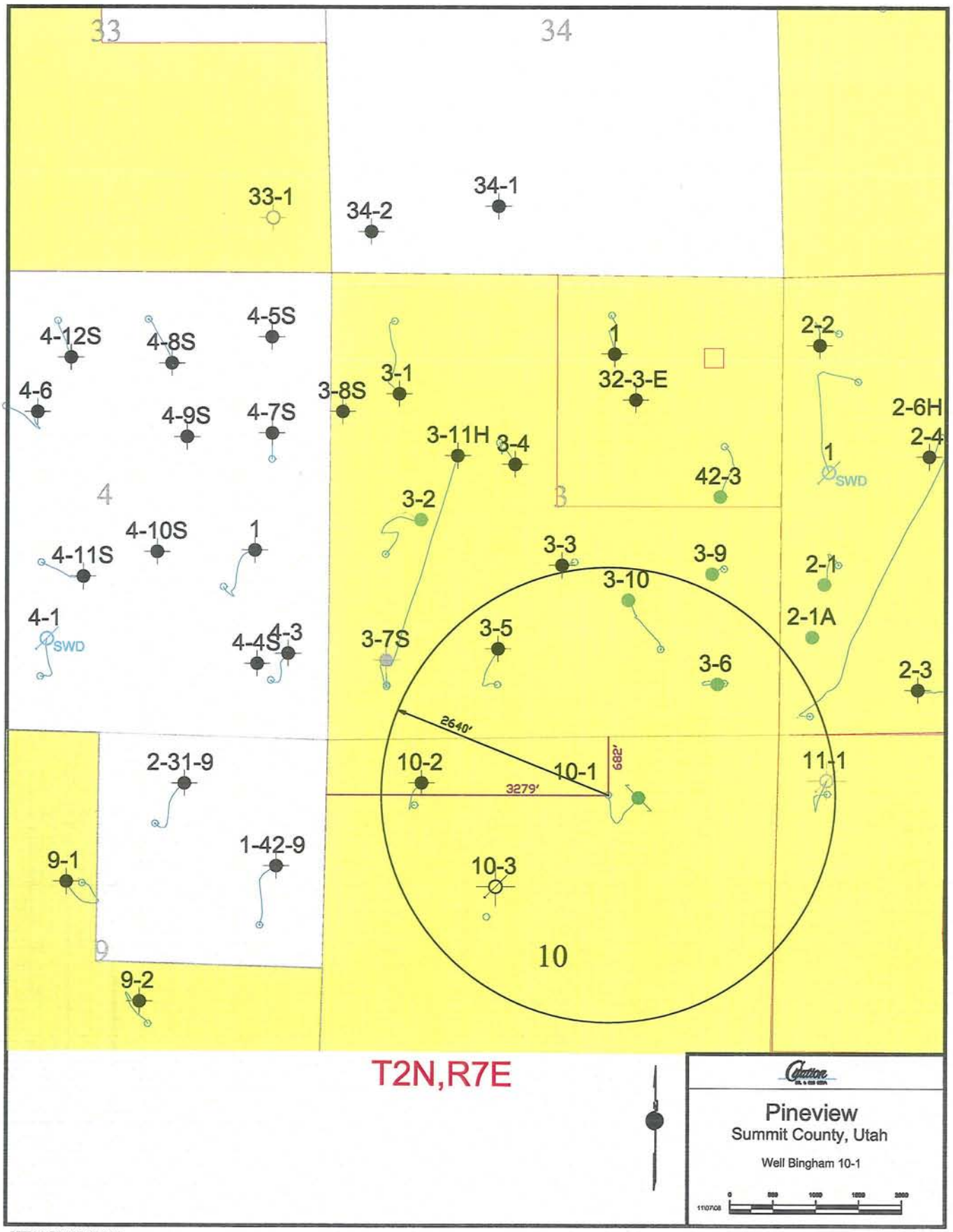

PETRA 11/7/2008 7:23:38 AM

WORKOVER PROCEDURE

PROJECT: Bingham 10-1: Convert to SWD well.

DRILLED & COMPLETED: 6/76 - 11/76 LAST WO: 9/09 – OAP Sliderock, acid stim, commingle all opened Twin Creek zones and installed ESP

LOCATION: 682' FNL & 3279' FWL, NW NE Sec. 10, T-2N, R-7E

FIELD: Pineview COUNTY: Summit STATE: UT

TD: 10,380'KB PBTD: 9,765' KB DATUM: 6761' GL KB to GL: 17'

CASING AND LINER RECORD

SIZE	WT / GRADE	DEPTH	CEMENT	HOLE SIZE	TOC	REMARKS
13 3/8"	61#	68'	250 sx	17 1/4"	SURF	CIRC'D
9 5/8"	36# / K-55	2500'	1100 sx	12 1/4"	SURF	CIRC'D
7"	23 & 26# / N-80 & S-95	10380'	2631 sx	8 3/8"	6350'	CBL (9/76)
4 1/2"	13.5 & 15.1# / L-80	9806'	580 sx	-	7346'	CIRC'D behind liner TOL @ 7346'

PRESENT FORMATION AND COMPLETION: Twin Creek Group:
Rich: (9300 – 9316'), (9355 – 9365'), (9413 – 9440') & (9455' – 9469') *w/ 2 spf (9/80)*
Sliderock: (9534 – 9572'), (9578 – 6261'), (9606 – 9616'), & (9620 – 9626') *w/ 4 spf (9/09)*

TUBING: 40 jts 2 7/8" 6.5 ppf J-55 8rd EUE tbg kill string – LD ESP prior to RIH w/ kill string (11/09)

MISC.: 11/06/09 – LD ESP and SI well. RIH w/ (20) jts 2 7/8" Kill String
10/02/09 – OAP Sliderock, Acid Stim, Commingled and RTP on sub pump
9/11/95 – SI due to DH ESP failure. Test:: 30 BOPD + 45 MCFPD + 450 BWPD
3/4/94 – Convert from rod pump to ESP
2/94 – SI due to excessive rod & tbg failures
8/6/92 – Performed Diklor/Acid treatment via CT. Tag fill/PB @ 9759'

PROCEDURE

- **MI & Rack ± 9800' 2 3/8" 4.7 ppf N-80 'WS' tubing (COG purchase)**
- **MI & Rack ± 2700' 2 3/8" 4.7 ppf J-55 8rd EUE tubing (IPC)**
- **MI & Rack ± 6600' 2 7/8" 6.5 ppf J-55 8rd EUE tubing (IPC)**

1. MI RU PU. NDWH. NU BOP. POOH and LD 40 jts 2 7/8" 6.5 ppf J-55 EUE 8rd kill string.
2. PU & Tally RIH w/ 3 5/8" MT bit & 4 ½" scraper on 2 3/8" 4.7 ppf N-80 WS tbg to PBTD @ 9765' KB (Tag'd on 9/09). POOH w/ bit, scraper and 2 3/8" WS. LD bit & scraper.
3. MI RU Hydrotester. PU & Hydrotest RIH w/ 4 ½ (15.1#) RBP & PKR w/ shut-off valve & on/off tool on 2 3/8" WS to 9,000 psi (80% internal yield pressure). **Set 4 ½" RBP @ ±9700'**. Unlatch from RBP and PUH w/ PKR. **Set PKR @ ±9500'**.
4. RU Pump Truck. Establish PIR & IR in SLIDEROCK perfs f(9534 – 9626') [92' – 284 Holes].
5. Rlse PKR. RIH and latch onto RBP. Rlse RBP, PUH, and re-set RBP @ ±9500'. Unlatch from RBP and PUH w/ PKR. Re-set PKR @ ±9200'.

6. Load backside (BS Capacity~266 BW). Pressure test 7" casing & 4 ½" liner to 1,000 psi down BS. Switch to tbg. Establish PIR & IR in RICH perfs f(9300 – 9469') [169' – 138 Holes]. RD Pmp Trk.

   Note: If 7" casing and 4 ½" liner holds 1,000 psi during the casing pressure test, continue with Step 7. Otherwise, follow the next five steps to continue:

   1. Rlse & POOH w/ On/Off tool leaving 4 ½" PKR set @ ±9200'.
   2. PU & RIH w/ 7" PKR (23#) & SN on 2 3/8" WS. Set 7" PKR @ ±7300' (Above Top of 4 ½" LNR).
   3. RU pump truck and load backside (capacity: ±247 BW). Press test 7" csg dwn BS & 4 ½" liner dwn tbg to 1000 psi for <5 min.
   4. Rlse 7" PKR & POH w/ 2 3/8" WS. LD 7" PKR.
   5. RIH w/ latching tool on 2 3/8" WS and latch to 4 ½" PKR.

7. Rlse PKR. RIH and latch onto RBP. Rlse RBP @ **±9500'**. POH w/ RBP & PKR. LD RBP & PKR.

8. MI RU WL. RU lubricator. Correlate to **Dual Lateral Log run by Schlumberger on 8/16/76**. RIH & perforate the following using 3 1/8" gun, 4 spf & 90° phasing (as per the Reservoir Department recommendation):

(7" 23# S-95 Casing Interval)

Formation	Interval		No. Ft	Holes
Nugget	10050	10075	25	100
Nugget	10085	10105	20	80
Nugget	10200	10220	20	80
Total	**4 Intervals**		**65**	**260**

(4 ½" 15.1# L-80 Liner Interval)

Formation	Interval		No. Ft	Holes
Nugget	9707	9720	13	52
Nugget	9736	9746	10	40
Nugget	9753	9758	5	20
Nugget	9775	9785	10	40
Total	**4 Intervals**		**44**	**176**

9. RD MO WL truck & lubricator.

10. MI RU hydrotester. PU & hydrotest RIH w/ 4 ½" PKR (15.1#) & SN on 2 3/8" WS to 9,000 psi (80% internal yield pressure). **Set PKR @ ±9650'**.

11. MI RU Stimulation Co. **Acid-Frac Nugget perfs (9707 – 10,220') w/ GRS [513' – 325 Holes]** as per service company recommendation. RD Stimulation Co.

Treated Nugget Intervals

Formation	Interval		No. Ft	Holes	Shot Density
Nugget (NEW)	9707	9720	13	27	4 spf
Nugget (NEW)	9736	9746	10	21	4 spf
Nugget (NEW)	9753	9758	5	11	4 spf
Nugget (NEW)	9775	9785	10	21	4 spf
Nugget (NEW)	9790	9796	6	13	4 spf
Nugget	9822	9841	19	39	2 spf
Nugget	9842	9848	6	13	2 spf
Nugget	9862	9868	6	13	2 spf
Nugget	9880	9886	6	13	2 spf
Nugget	9926	9936	10	21	2 spf
Nugget (NEW)	10050	10075	25	100	4 spf
Nugget (NEW)	10085	10105	20	80	4 spf

Nugget (NEW)	10200	10220	20	80	4 spf
Total	**4 Intervals**		**156' (Gross 513')**	**325 Holes**	

12. Release PKR & POOH. LD 2 3/8" WS & PKR.
13. PU & RIH w/the following bottom-hole assembly including the in-tandem PKR system to isolate **TWIN CREEK perfs f(9300 – 9626')** [326' – 422 holes]:

Qty	Description	Length	Depth
---	KB correction	17	17
206	2 7/8" 6.5 ppf J-55 8rd EUE tbg (IPC – ID: 2.312")	6,386	6,403
68	2 3/8" 4.7 ppf J-55 8rd EUE tbg (IPC – ID: 1.866")	2,108	8,511
1	4 1/2" (13.4#) Top In-Tandem Tension PKR	8	8,519
37	2 3/8" 4.7 ppf J-55 8rd EUE tbg (IPC – ID: 1.866")	1,147	9,666
1	4 1/2" (15.1#) Bottom In-Tandem "Hornet" PKR	8	9,674

14. Set 4 ½" in-tandem Top and Bottom PKRs at ±8500' & ±9675', respectively.
15. ND BOP, NU WH, RD PU. NU 4" injection fiberglass flowline.
16. Open well for injection.

CITATION OIL AND GAS CORPORATION
WELLBORE DIAGRAM AND INFORMATION
PROPOSED WELLBORE DIAGRAM

Well Name:	Bingham 10-1	**Field:**	Pineview
Date:	12/01/09 (AL)	**Location:**	NW/NE Sec. 10, T2N, R7E
County:	Summit	**State:**	Utah

Surface:	**682' FNL & 3279' FWL Sec. 10, T-2-N, R-7-E Summit County, UT**
Completed:	**11/7/76**
Elevation:	**6761' GL**
KB:	**17'**
API #:	**43-043-30025**

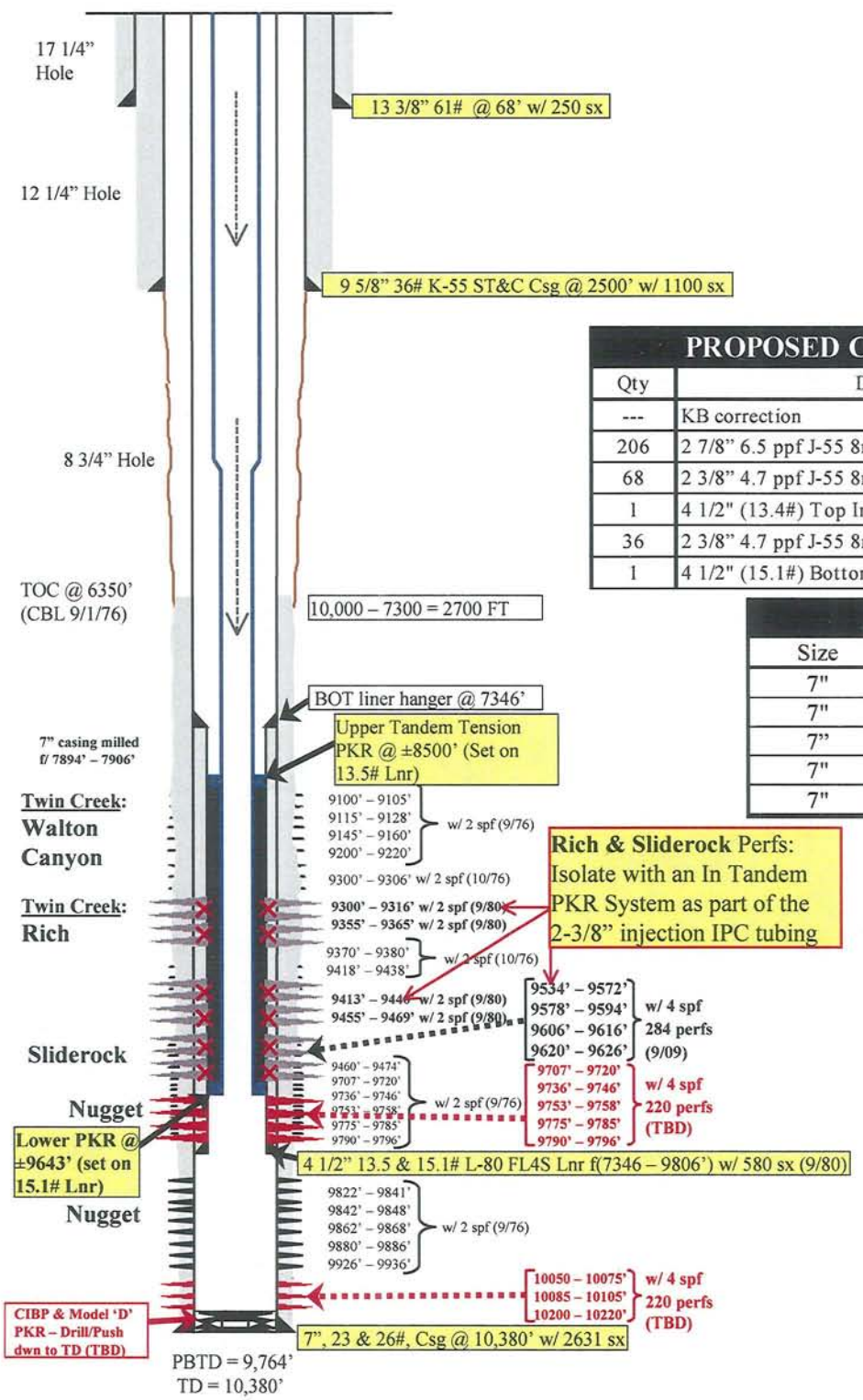

PROPOSED COMPLETION ASSEMBLY

Qty	Description	Length	Depth
---	KB correction	17	17
206	2 7/8" 6.5 ppf J-55 8rd EUE tbg (IPC – ID: 2.312")	6,386	6,403
68	2 3/8" 4.7 ppf J-55 8rd EUE tbg (IPC – ID: 1.866")	2,108	8,511
1	4 1/2" (13.4#) Top In-Tandem Tension PKR	8	8,519
36	2 3/8" 4.7 ppf J-55 8rd EUE tbg (IPC – ID: 1.866")	1,116	9,635
1	4 1/2" (15.1#) Bottom In-Tandem "Hornet" PKR	8	9,643

7" CASING DETAIL

Size	Weight	Grade	Depth
7"	26	S-95	Surf – 25
7"	23	N-80	25 – 5701
7"	23	S-95	5701 – 7550
7"	26	S-95	7550 – 8320
7"	23	S-95	8320 –10380

4 1/2" LINER DETAIL

Size	Weight	ID / Drift ID	Grade	Length
4 ½"	13.5	3.92" / 3.795"	L-80	Top 1314'
4 ½"	15.1	3.826" / 3.701"	L-80	Bottom 1146'

CITATION OIL AND GAS CORPORATION
WELLBORE DIAGRAM AND INFORMATION
PROPOSED WELLBORE DIAGRAM

Well Name:	Bingham 10-1	**Field:**	Pineview
Date:	12/01/09 (AL)	**Location:**	NW/NE Sec. 10, T2N, R7E
County:	Summit	**State:**	Utah

Surface:	**682' FNL & 3279' FWL Sec. 10, T-2-N, R-7-E Summit County, UT**
Completed:	**11/7/76**
Elevation:	**6761' GL**
KB:	**17'**
API #:	**43-043-30025**

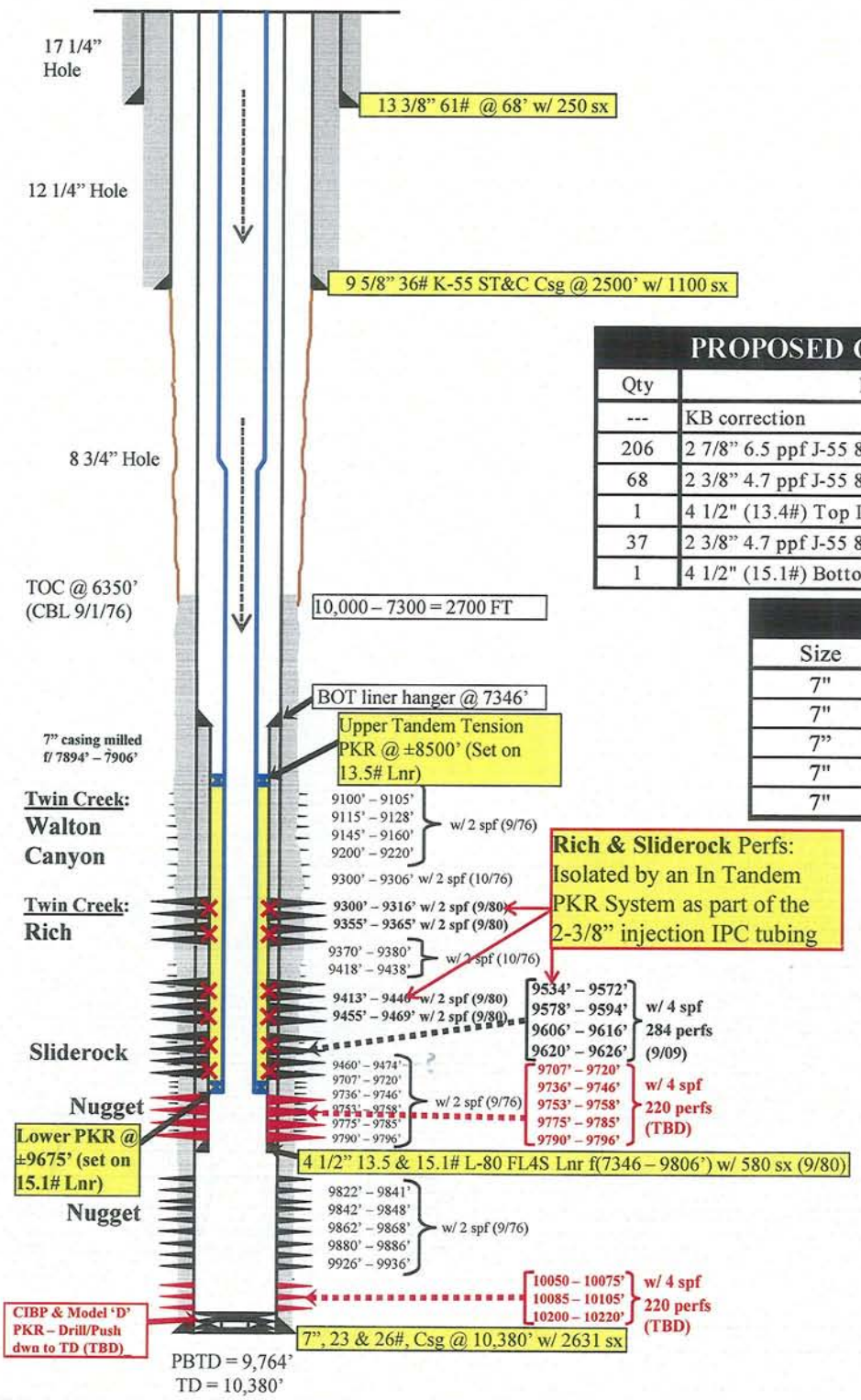

PROPOSED COMPLETION ASSEMBLY

Qty	Description	Length	Depth
---	KB correction	17	17
206	2 7/8" 6.5 ppf J-55 8rd EUE tbg (IPC – ID: 2.312")	6,386	6,403
68	2 3/8" 4.7 ppf J-55 8rd EUE tbg (IPC – ID: 1.866")	2,108	8,511
1	4 1/2" (13.4#) Top In-Tandem Tension PKR	8	8,519
37	2 3/8" 4.7 ppf J-55 8rd EUE tbg (IPC – ID: 1.866")	1,147	9,666
1	4 1/2" (15.1#) Bottom In-Tandem "Hornet" PKR	8	9,674

7" CASING DETAIL

Size	Weight	Grade	Depth
7"	26	S-95	Surf – 25
7"	23	N-80	25 – 5701
7"	23	S-95	5701 – 7550
7"	26	S-95	7550 – 8320
7"	23	S-95	8320 –10380

4 1/2" LINER DETAIL

Size	Weight	ID / Drift ID	Grade	Length
4 ½"	13.5	3.92" / 3.795"	L-80	Top 1314'
4 ½"	15.1	3.826" / 3.701"	L-80	Bottom 1146'

CITATION OIL AND GAS CORPORATION
WELLBORE DIAGRAM AND INFORMATION
CURRENT WELLBORE DIAGRAM

Well Name:	Bingham 10-1	**Field:**	Pineview
Date:	12/01/09 (AL)	**Location:**	NW/NE Sec. 10, T2N, R7E
County:	Summit	**State:**	Utah

Surface:	**682' FNL & 3279' FWL Sec. 10, T-2-N, R-7-E Summit County, UT**
Completed:	**11/7/76**
Elevation:	**6761' GL**
KB:	**17'**
API #:	**43-043-30025**

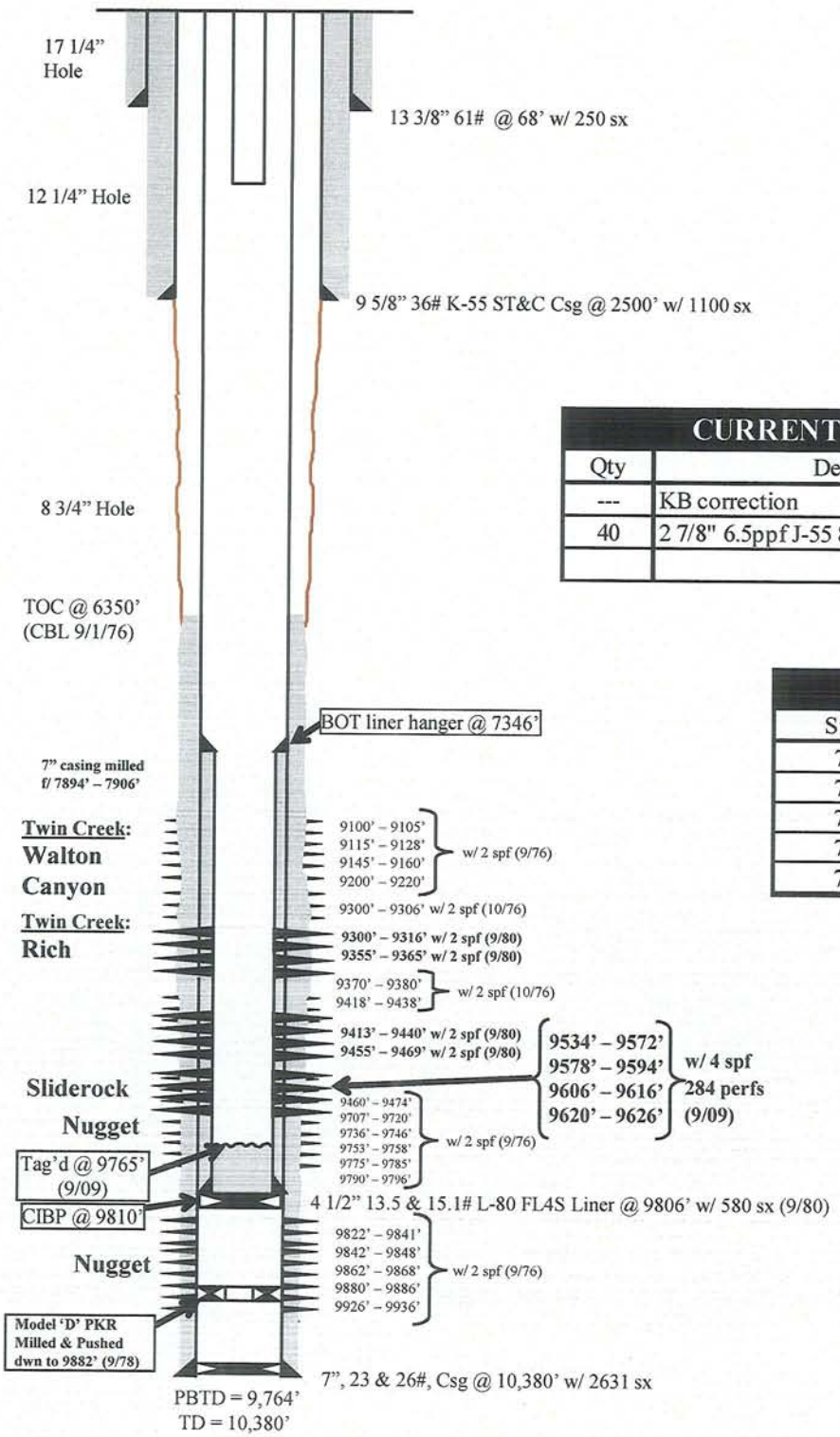

CURRENT COMPLETION ASSEMBLY

Qty	Description	Length	Depth
---	KB correction	14	14.00
40	2 7/8" 6.5ppf J-55 8rd EUE tbg (Kill String)	1,240.00	1,254.00

7" CASING DETAIL

Size	Weight	Grade	Depth
7"	26	S-95	Surf – 25
7"	23	N-80	25 – 5701
7"	23	S-95	5701 – 7550
7"	26	S-95	7550 – 8320
7"	23	S-95	8320 –10380

4 1/2" LINER DETAIL

Size	Weight	ID / Drift ID	Grade	Length
4 ½"	13.5	3.92" / 3.795"	L-80	Top 1314'
4 ½"	15.1	3.826" / 3.701"	L-80	Bottom 1146'

Champion Technologies

Saturation Index Calculations Based on CO_2 Content in Water

(BASED ON TOMSON-ODDO MODEL)

Citation Oil & Gas Corp.

Pineview, Bingham

	Sample Date	Comments
BRINE 1: Pineview, Bingham 10-1	November 9, 2009	Sample in Well Head
BRINE 2: Pineview, Bingham #1 injection well	May 1, 2009	Sample from Injector

Component		Brines		Mixing Ratio as %										
		BRINE 1		5	10	20	30	40	50	60	70	80	90	95
			BRINE 2	95	90	80	70	60	50	40	30	20	10	5
Calcium, Ca^{+2}	mg/l	1,482	945	972	999	1,052	1,106	1,160	1,214	1,267	1,321	1,375	1,428	1,455
Magnesium, Mg^{+2}	mg/l	52	13	15	17	21	25	29	33	36	40	44	48	50
Barium, Ba^{+2}	mg/l	0	0	0	0	0	0	0	0	0	0	0	0	0
Strontium, Sr^{+2}	mg/l	0	0	0	0	0	0	0	0	0	0	0	0	0
Carbonate, CO_3^{-2}	mg/l	0	0	0	0	0	0	0	0	0	0	0	0	0
Bicarbonate, HCO_3^{-1}	mg/l	430	941	915	890	839	788	737	686	634	583	532	481	456
Sulfate, SO_4^{-2}	mg/l	1,273	38	100	162	285	409	532	656	779	903	1,026	1,150	1,211
Chloride, Cl_2	mg/l	22,240	19,840	19,960	20,080	20,320	20,560	20,800	21,040	21,280	21,520	21,760	22,000	22,120
CO_2 in Brine	mg/l	80	5	9	13	20	28	35	43	50	58	65	73	76
Ionic Strength		0.71	0.60	0.61	0.61	0.62	0.63	0.65	0.66	0.67	0.68	0.69	0.70	0.71
Temperature	°F	85	85	85	85	85	85	85	85	85	85	85	85	85
Pressure	psia	100	100	100	100	100	100	100	100	100	100	100	100	100
Tomson-Oddo Saturation Index														
Calcite; $CaCO_3$		-0.48	1.29	1.03	0.86	0.62	0.44	0.28	0.15	0.02	-0.10	-0.22	-0.35	-0.41
Gypsum; $CaSO_4$-$2H_2O$		N/A	N/A	N/A	N/A	N/A	N/A	N/A	N/A	N/A	N/A	N/A	N/A	N/A
Hemihydrate; $CaSO_4$-$1/2H_2O$		N/A	N/A	N/A	N/A	N/A	N/A	N/A	N/A	N/A	N/A	N/A	N/A	N/A
Anhydrite; $CaSO_4$		N/A	N/A	N/A	N/A	N/A	N/A	N/A	N/A	N/A	N/A	N/A	N/A	N/A
Barite; $BaSO_4$		N/A	N/A	N/A	N/A	N/A	N/A	N/A	N/A	N/A	N/A	N/A	N/A	N/A
Celestite; $SrSO_4$		N/A	N/A	N/A	N/A	N/A	N/A	N/A	N/A	N/A	N/A	N/A	N/A	N/A
P(Pounds Per)T(Thousand)B(Barrels)														
Calcite; $CaCO_3$		N/A	374.7	322.5	279.5	212.7	155.5	99.2	55.4	5.7	N/A	N/A	N/A	N/A
Gypsum; $CaSO_4$-$2H_2O$		N/A	N/A	N/A	N/A	N/A	N/A	N/A	N/A	N/A	N/A	N/A	N/A	N/A
Hemihydrate; $CaSO_4$-$1/2H_2O$		N/A	N/A	N/A	N/A	N/A	N/A	N/A	N/A	N/A	N/A	N/A	N/A	N/A
Anhydrite; $CaSO_4$		N/A	N/A	N/A	N/A	N/A	N/A	N/A	N/A	N/A	N/A	N/A	N/A	N/A
Barite; $BaSO_4$		N/A	N/A	N/A	N/A	N/A	N/A	N/A	N/A	N/A	N/A	N/A	N/A	N/A
Celestite; $SrSO_4$		N/A	N/A	N/A	N/A	N/A	N/A	N/A	N/A	N/A	N/A	N/A	N/A	N/A

Water Analysis Report

Champion Technologies

	02-Dec-09
Date Sampled :	09-Nov-09
Date Received :	24-Nov-09
Date Reported :	02-Dec-09

Citation Oil & Gas Corporation

UT

Attention : Chad Stallard
cc1 : Joe Begay
cc2 :
cc3 :

Comments :

Field : Pineview
Lease : Bingham
Location : 10-1
Sample Point : header
Salesman : Ed Hathaway
Analyst : Jessica Jolley Greene

CATIONS

Calcium :	1,482	mg/l
Magnesium :	52	mg/l
Barium :	0	mg/l
Strontium :	0	mg/l
Iron :	2.0	mg/l
Manganese :		mg/l
Sodium :	13396	mg/l

ANIONS

Chloride :	22,240	mg/l
Carbonate :	0	mg/l
Bicarbonate :	430	mg/l
Sulfate :	1,273	mg/l

pH (field) :	6.00		**Specific Gravity :**	1.035	grams/ml
Temperature :	85	degrees F	**CO2 in Water :**	80	mg/l
Ionic Strength :	0.66		**Mole % CO2 in Gas:**		mole %
Dissolved Solids :	38,875	ppm	**H2S in Water :**	9.0	mg/l
Resistivity :		ohm-meters	**H2S in gas :**		ppm
Ammonia :		ppm	**Dissolved Oxygen :**		ppm

SI calculations based on Tomson-Oddo parameters

Calcite (CaCO3) SI :	-0.44	Calcite PTB :	N/A
Calcite (CaCO3) SI @ 100 F :	-0.29	Calcite PTB @ 100 F :	N/A
Calcite (CaCO3) SI @ 120 F :	-0.08	Calcite PTB @ 120 F :	N/A
Calcite (CaCO3) SI @ 140 F :	0.14	Calcite PTB @ 140 F :	34.7
Calcite (CaCO3) SI @ 160 F :	0.37	Calcite PTB @ 160 F :	81.0
Calcite (CaCO3) SI @ 180 F :	0.60	Calcite PTB @ 180 F :	117.7
Calcite (CaCO3) SI @ 200 F :	0.84	Calcite PTB @ 200 F :	147.6
Gypsum (CaSO4) SI :	-0.57	Gypsum PTB :	N/A
Barite (BaSO4) SI :	N/A	Barite PTB :	N/A
Celestite (SrSO4) SI :	N/A	Celestite PTB :	N/A

Water Analysis Report

Champion Technologies

Customer :	**Citation Oil & Gas Corporation**	**Field :**	Pineview Field
Address :	P. O. Box 527	**Lease :**	Pineview Lease
City :	Coalville	**Location :**	UPRR Well No. 3-10
State :	UT **Postal Code :** 84017-	**Sample Point :**	wellhead
Attention :	Val Meadows	**Date Sampled :**	01-May-09
cc1 :		**Date Received :**	04-May-09
cc2 :		**Date Reported :**	18-May-09
Comments :		**Salesman :**	Ed Hathaway
		Analyst :	Karen Hawkins Allen

CATIONS

Calcium :	988	mg/l
Magnesium :	2	mg/l
		mg/l
		mg/l
Iron :	3.0	mg/l
Sodium :	11569	mg/l

ANIONS

Chloride :	19,040	mg/l
Carbonate :	0	mg/l
Bicarbonate :	910	mg/l
Sulfate :	33	mg/l

pH (field) :	6.00		**Specific Gravity :**	1.025	grams/ml
Temperature :	85	degrees F	**Total Dissolved Solids :**	32,545	ppm
Ionic Strength :	0.55		**CO2 in Water :**	30	mg/l
			CO2 in Gas :		mole %
Resistivity :		ohm/meters	**H2S in Water :**	10.0	mg/l
Ammonia :		ppm	**Dissolved Oxygen :**	0.000	ppm

SI calculations based on Tomson-Oddo parameters

Calcite (CaCO3) SI :	0.55	**Calcite PTB :**	204.2
Calcite (CaCO3) SI @ 100 F :	0.70	**Calcite PTB @ 100 F :**	247.0
Calcite (CaCO3) SI @ 120 F :	0.91	**Calcite PTB @ 120 F :**	296.0
Calcite (CaCO3) SI @ 140 F :	1.13	**Calcite PTB @ 140 F :**	339.9
Calcite (CaCO3) SI @ 160 F :	1.36	**Calcite PTB @ 160 F :**	377.7
Gypsum (CaSO4) SI :	-2.25	**Gypsum PTB :**	N/A
Barite (BaSO4) SI :	N/A	**Barite PTB :**	N/A
Celestite (SrSO4) SI :	N/A	**Celestite PTB :**	N/A

Water Analysis Report

Champion Technologies

Customer :	Citation Oil & Gas Corporation	**Field :**	Pineview
Address :	P. O. Box 527	**Lease :**	UPRR
City :	Coalville	**Location :**	UPRR Well No. 03-02
State :	UT **Postal Code :** 84017-	**Sample Point :**	wellhead
Attention :	Val Meadows	**Date Sampled :**	01-May-09
cc1 :		**Date Received :**	04-May-09
cc2 :		**Date Reported :**	18-May-09
Comments :		**Salesman :**	Ed Hathaway
		Analyst :	Karen Hawkins Allen

CATIONS

Calcium :	708	mg/l
Magnesium :	11	mg/l
		mg/l
		mg/l
Iron :	4.0	mg/l
Sodium :	11415	mg/l

ANIONS

Chloride :	18,480	mg/l
Carbonate :	0	mg/l
Bicarbonate :	660	mg/l
Sulfate :	31	mg/l

pH (field) :	6.00		**Specific Gravity :**	1.06	grams/ml
Temperature :	85	degrees F	**Total Dissolved Solids :**	31,309	ppm
Ionic Strength :	0.53		**CO2 in Water :**	55	mg/l
			CO2 in Gas :		mole %
Resistivity :		ohm/meters	**H2S in Water :**	4.0	mg/l
Ammonia :		ppm	**Dissolved Oxygen :**	0.000	ppm

SI calculations based on Tomson-Oddo parameters

Calcite (CaCO3) SI :	-0.12	**Calcite PTB :**	N/A
Calcite (CaCO3) SI @ 100 F :	0.04	**Calcite PTB @ 100 F :**	11.8
Calcite (CaCO3) SI @ 120 F :	0.25	**Calcite PTB @ 120 F :**	77.0
Calcite (CaCO3) SI @ 140 F :	0.46	**Calcite PTB @ 140 F :**	127.3
Calcite (CaCO3) SI @ 160 F :	0.69	**Calcite PTB @ 160 F :**	176.2
Gypsum (CaSO4) SI :	-2.40	**Gypsum PTB :**	N/A
Barite (BaSO4) SI :	N/A	**Barite PTB :**	N/A
Celestite (SrSO4) SI :	N/A	**Celestite PTB :**	N/A

Water Analysis Report

Champion Technologies

Customer :	Citation Oil & Gas Corporation	**Field :**	Pineview Field
Address :	P. O. Box 527	**Lease :**	Pineview Lease
City :	Coalville	**Location :**	Bingham & Sons #1 Well No. 42-3
State :	UT **Postal Code :** 84017-	**Sample Point :**	wellhead
Attention :	Val Meadows	**Date Sampled :**	01-May-09
cc1 :		**Date Received :**	04-May-09
cc2 :		**Date Reported :**	18-May-09
Comments :		**Salesman :**	Ed Hathaway
		Analyst :	Karen Hawkins Allen

CATIONS

Calcium :	945	mg/l
Magnesium :	13	mg/l
		mg/l
		mg/l
Iron :	2.0	mg/l
Sodium :	12131	mg/l

ANIONS

Chloride :	19,840	mg/l
Carbonate :	0	mg/l
Bicarbonate :	941	mg/l
Sulfate :	38	mg/l

pH (field) :	5.50		**Specific Gravity :**	1.025	grams/ml
Temperature :	85	degrees F	**Total Dissolved Solids :**	33,910	ppm
Ionic Strength :	0.58		**CO2 in Water :**	5	mg/l
			CO2 in Gas :		mole %
Resistivity :		ohm/meters	**H2S in Water :**	1.0	mg/l
Ammonia :		ppm	**Dissolved Oxygen :**	0.000	ppm

SI calculations based on Tomson-Oddo parameters

Calcite (CaCO3) SI :	1.31	**Calcite PTB :**	377.9
Calcite (CaCO3) SI @ 100 F :	1.46	**Calcite PTB @ 100 F :**	400.1
Calcite (CaCO3) SI @ 120 F :	1.68	**Calcite PTB @ 120 F :**	427.5
Calcite (CaCO3) SI @ 140 F :	1.89	**Calcite PTB @ 140 F :**	449.7
Calcite (CaCO3) SI @ 160 F :	2.12	**Calcite PTB @ 160 F :**	468.7
Gypsum (CaSO4) SI :	-2.22	**Gypsum PTB :**	N/A
Barite (BaSO4) SI :	N/A	**Barite PTB :**	N/A
Celestite (SrSO4) SI :	N/A	**Celestite PTB :**	N/A

Water Analysis Report

Champion Technologies

Customer :	Citation Oil & Gas Corporation	**Field :**	Pineview Field
Address :	P. O. Box 527	**Lease :**	McDonald Lease
City :	Coalville	**Location :**	Bingham Well No. 02-01
State :	UT **Postal Code :** 84017-	**Sample Point :**	wellhead
Attention :	Val Meadows	**Date Sampled :**	01-May-09
cc1 :		**Date Received :**	04-May-09
cc2 :		**Date Reported :**	18-May-09
Comments :		**Salesman :**	Ed Hathaway
		Analyst :	Karen Hawkins Allen

CATIONS

Calcium :	1,103	mg/l
Magnesium :	25	mg/l
		mg/l
		mg/l
Iron :	3.0	mg/l
Sodium :	12104	mg/l

ANIONS

Chloride :	20,280	mg/l
Carbonate :	0	mg/l
Bicarbonate :	660	mg/l
Sulfate :	33	mg/l

pH (field) :	7.00		**Specific Gravity :**	1.025	grams/ml
Temperature :	85	degrees F	**Total Dissolved Solids :**	34,208	ppm
Ionic Strength :	0.58		**CO2 in Water :**	50	mg/l
			CO2 in Gas :		mole %
Resistivity :		ohm/meters	**H2S in Water :**	0.0	mg/l
Ammonia :		ppm	**Dissolved Oxygen :**	0.000	ppm

SI calculations based on Tomson-Oddo parameters

Calcite (CaCO3) SI :	0.07	**Calcite PTB :**	23.7
Calcite (CaCO3) SI @ 100 F :	0.22	**Calcite PTB @ 100 F :**	74.0
Calcite (CaCO3) SI @ 120 F :	0.43	**Calcite PTB @ 120 F :**	130.3
Calcite (CaCO3) SI @ 140 F :	0.65	**Calcite PTB @ 140 F :**	180.7
Calcite (CaCO3) SI @ 160 F :	0.88	**Calcite PTB @ 160 F :**	222.1
Gypsum (CaSO4) SI :	-2.22	**Gypsum PTB :**	N/A
Barite (BaSO4) SI :	N/A	**Barite PTB :**	N/A
Celestite (SrSO4) SI :	N/A	**Celestite PTB :**	N/A

Water Analysis Report

Champion Technologies

Customer :	Citation Oil & Gas Corporation	**Field :**	Pineview
Address :	P. O. Box 527	**Lease :**	Clark
City :	Coalville	**Location :**	UPRR Well No. 03-09
State :	UT **Postal Code :** 84017-	**Sample Point :**	wellhead
Attention :	Val Meadows	**Date Sampled :**	01-May-09
cc1 :		**Date Received :**	04-May-09
cc2 :		**Date Reported :**	18-May-09
Comments :		**Salesman :**	Ed Hathaway
		Analyst :	Karen Hawkins Allen

CATIONS

Calcium :	900	mg/l
Magnesium :	18	mg/l
		mg/l
		mg/l
Iron :	3.0	mg/l
Sodium :	12087	mg/l

ANIONS

Chloride :	19,740	mg/l
Carbonate :	0	mg/l
Bicarbonate :	890	mg/l
Sulfate :	35	mg/l

pH (field) :	7.00		**Specific Gravity :**	1.025	grams/ml
Temperature :	85	degrees F	**Total Dissolved Solids :**	33,673	ppm
Ionic Strength :	0.57		**CO2 in Water :**	25	mg/l
			CO2 in Gas :		mole %
Resistivity :		ohm/meters	**H2S in Water :**	2.0	mg/l
Ammonia :		ppm	**Dissolved Oxygen :**	0.000	ppm

SI calculations based on Tomson-Oddo parameters

Calcite (CaCO3) SI :	0.55	**Calcite PTB :**	197.7
Calcite (CaCO3) SI @ 100 F :	0.70	**Calcite PTB @ 100 F :**	237.6
Calcite (CaCO3) SI @ 120 F :	0.92	**Calcite PTB @ 120 F :**	287.5
Calcite (CaCO3) SI @ 140 F :	1.13	**Calcite PTB @ 140 F :**	329.5
Calcite (CaCO3) SI @ 160 F :	1.36	**Calcite PTB @ 160 F :**	365.4
Gypsum (CaSO4) SI :	-2.27	**Gypsum PTB :**	N/A
Barite (BaSO4) SI :	N/A	**Barite PTB :**	N/A
Celestite (SrSO4) SI :	N/A	**Celestite PTB :**	N/A

Water Analysis Report

Champion Technologies

Customer :	Citation Oil & Gas Corporation	**Field :**	Pineview
Address :	P. O. Box 527	**Lease :**	Bingham
City :	Coalville	**Location :**	Clark Well No. 04-01 SWD
State :	UT **Postal Code :** 84017-	**Sample Point :**	wellhead
Attention :	Val Meadows	**Date Sampled :**	01-May-09
cc1 :		**Date Received :**	04-May-09
cc2 :		**Date Reported :**	18-May-09
Comments :		**Salesman :**	Ed Hathaway
		Analyst :	Karen Hawkins Allen

CATIONS

Calcium :	852	mg/l
Magnesium :	39	mg/l
		mg/l
		mg/l
Iron :	2.0	mg/l
Sodium :	10854	mg/l

ANIONS

Chloride :	17,840	mg/l
Carbonate :	0	mg/l
Bicarbonate :	850	mg/l
Sulfate :	32	mg/l

pH (field) :	6.00		**Specific Gravity :**	1.02	grams/ml
Temperature :	85	degrees F	**Total Dissolved Solids :**	30,469	ppm
Ionic Strength :	0.52		**CO2 in Water :**	50	mg/l
			CO2 in Gas :		mole %
Resistivity :		ohm/meters	**H2S in Water :**	11.0	mg/l
Ammonia :		ppm	**Dissolved Oxygen :**	0.000	ppm

SI calculations based on Tomson-Oddo parameters

Calcite (CaCO3) SI :	0.23	**Calcite PTB :**	87.7
Calcite (CaCO3) SI @ 100 F :	0.39	**Calcite PTB @ 100 F :**	141.1
Calcite (CaCO3) SI @ 120 F :	0.60	**Calcite PTB @ 120 F :**	202.1
Calcite (CaCO3) SI @ 140 F :	0.82	**Calcite PTB @ 140 F :**	253.6
Calcite (CaCO3) SI @ 160 F :	1.04	**Calcite PTB @ 160 F :**	297.5
Gypsum (CaSO4) SI :	-2.31	**Gypsum PTB :**	N/A
Barite (BaSO4) SI :	N/A	**Barite PTB :**	N/A
Celestite (SrSO4) SI :	N/A	**Celestite PTB :**	N/A

Champion Technologies

Water Analysis Report

Customer :	**Citation Oil & Gas Corporation**	**Field :**	Pineview Field
Address :	P. O. Box 527	**Lease :**	McDonald Lease
City :	Coalville	**Location :**	Bingham Well No. 02-01A
State :	UT **Postal Code :** 84017-	**Sample Point :**	wellhead
Attention :	Val Meadows	**Date Sampled :**	01-May-09
cc1 :		**Date Received :**	04-May-09
cc2 :		**Date Reported :**	18-May-09
Comments :		**Salesman :**	Ed Hathaway
		Analyst :	Karen Hawkins Allen

CATIONS

Calcium :	1,135	mg/l
Magnesium :	35	mg/l
		mg/l
		mg/l
Iron :	3.0	mg/l
Sodium :	13133	mg/l

ANIONS

Chloride :	21,860	mg/l
Carbonate :	0	mg/l
Bicarbonate :	820	mg/l
Sulfate :	32	mg/l

pH (field) :	6.00		**Specific Gravity :**	1.025	grams/ml
Temperature :	85	degrees F	**Total Dissolved Solids :**	37,018	ppm
Ionic Strength :	0.63		**CO2 in Water :**	50	mg/l
			CO2 in Gas :		mole %
Resistivity :		ohm/meters	**H2S in Water :**	2.0	mg/l
Ammonia :		ppm	**Dissolved Oxygen :**	0.000	ppm

SI calculations based on Tomson-Oddo parameters

Calcite (CaCO3) SI :	0.23	**Calcite PTB :**	92.0
Calcite (CaCO3) SI @ 100 F :	0.38	**Calcite PTB @ 100 F :**	143.5
Calcite (CaCO3) SI @ 120 F :	0.59	**Calcite PTB @ 120 F :**	202.4
Calcite (CaCO3) SI @ 140 F :	0.81	**Calcite PTB @ 140 F :**	255.7
Calcite (CaCO3) SI @ 160 F :	1.04	**Calcite PTB @ 160 F :**	299.9
Gypsum (CaSO4) SI :	-2.24	**Gypsum PTB :**	N/A
Barite (BaSO4) SI :	N/A	**Barite PTB :**	N/A
Celestite (SrSO4) SI :	N/A	**Celestite PTB :**	N/A

Water Analysis Report

Champion Technologies

Customer :	Citation Oil & Gas Corporation	**Field :**	Pineview
Address :	P. O. Box 527	**Lease :**	Clark
City :	Coalville	**Location :**	UPRR Well No. 03-06
State :	UT **Postal Code :** 84017-	**Sample Point :**	wellhead
Attention :	Val Meadows	**Date Sampled :**	01-May-09
cc1 :		**Date Received :**	04-May-09
cc2 :		**Date Reported :**	18-May-09
Comments :		**Salesman :**	Ed Hathaway
		Analyst :	Karen Hawkins Allen

CATIONS

Calcium :	982	mg/l
Magnesium :	56	mg/l
		mg/l
		mg/l
Iron :	1.0	mg/l
Sodium :	12126	mg/l

ANIONS

Chloride :	20,020	mg/l
Carbonate :	0	mg/l
Bicarbonate :	960	mg/l
Sulfate :	29	mg/l

pH (field) :	5.60		**Specific Gravity :**	1.025	grams/ml
Temperature :	85	degrees F	**Total Dissolved Solids :**	34,174	ppm
Ionic Strength :	0.58		**CO2 in Water :**	55	mg/l
			CO2 in Gas :		mole %
Resistivity :		ohm/meters	**H2S in Water :**	18.0	mg/l
Ammonia :		ppm	**Dissolved Oxygen :**	0.000	ppm

SI calculations based on Tomson-Oddo parameters

Calcite (CaCO3) SI :	0.30	**Calcite PTB :**	129.2
Calcite (CaCO3) SI @ 100 F :	0.46	**Calcite PTB @ 100 F :**	185.2
Calcite (CaCO3) SI @ 120 F :	0.67	**Calcite PTB @ 120 F :**	249.8
Calcite (CaCO3) SI @ 140 F :	0.89	**Calcite PTB @ 140 F :**	305.8
Calcite (CaCO3) SI @ 160 F :	1.11	**Calcite PTB @ 160 F :**	351.1
Gypsum (CaSO4) SI :	-2.32	**Gypsum PTB :**	N/A
Barite (BaSO4) SI :	N/A	**Barite PTB :**	N/A
Celestite (SrSO4) SI :	N/A	**Celestite PTB :**	N/A

Water Analysis Report

Champion Technologies

Customer :	Citation Oil & Gas Corporation	**Field :**	Pineview Field
Address :	P. O. Box 527	**Lease :**	Pineview Lease
City :	Coalville	**Location :**	Bingham & Son No.1 SWD
State :	UT **Postal Code :** 84017-	**Sample Point :**	wellhead
Attention :	Val Meadows	**Date Sampled :**	01-May-09
cc1 :		**Date Received :**	04-May-09
cc2 :		**Date Reported :**	18-May-09
Comments :		**Salesman :**	Ed Hathaway
		Analyst :	Karen Hawkins Allen

CATIONS

Calcium :	997	mg/l
Magnesium :	2	mg/l
		mg/l
		mg/l
Iron :	2.0	mg/l
Sodium :	14026	mg/l

ANIONS

Chloride :	22,740	mg/l
Carbonate :	0	mg/l
Bicarbonate :	1,050	mg/l
Sulfate :	63	mg/l

pH (field) :	7.00		**Specific Gravity :**	1.025	grams/ml
Temperature :	85	degrees F	**Total Dissolved Solids :**	38,880	ppm
Ionic Strength :	0.66		**CO2 in Water :**	40	mg/l
			CO2 in Gas :		mole %
Resistivity :		ohm/meters	**H2S in Water :**	8.0	mg/l
Ammonia :		ppm	**Dissolved Oxygen :**	0.000	ppm

SI calculations based on Tomson-Oddo parameters

Calcite (CaCO3) SI :	0.46	**Calcite PTB :**	197.5
Calcite (CaCO3) SI @ 100 F :	0.62	**Calcite PTB @ 100 F :**	252.0
Calcite (CaCO3) SI @ 120 F :	0.83	**Calcite PTB @ 120 F :**	313.3
Calcite (CaCO3) SI @ 140 F :	1.04	**Calcite PTB @ 140 F :**	364.4
Calcite (CaCO3) SI @ 160 F :	1.27	**Calcite PTB @ 160 F :**	410.4
Gypsum (CaSO4) SI :	-2.01	**Gypsum PTB :**	N/A
Barite (BaSO4) SI :	N/A	**Barite PTB :**	N/A
Celestite (SrSO4) SI :	N/A	**Celestite PTB :**	N/A

Well	Bingham 10-1
API	43043300250000
Status	SIOIL
Location	C NW NE; Sect 10 T2N-R7E Summit County, UT

Application to convert to SWD well.

Injection interval	Nugget Sandstone from 9300' to 10268' (Proposed perfs)
Maximum Injection Rate	10,200 bpd
Maximum Injection Pressure	1100 psi

Proposed injection zone contains oil, gas, and saline water within ½ mi of the well.

The Bingham 10-1 is presently shut-in. The current project is to test the Sliderock and possibly the Giraffe Creek members of the Twin Creek Formations for commercial hydrocarbons. If this is unsuccessful, the well will then be converted to SWD in the Nugget Sandstone.
All electrical, acoustic, and radioactive logs are on file with the State of Utah Board of Oil, Gas, and Mining.
The disposal fluid will consist of saltwater produced in the Pineview Field. The saltwater is produced from the Nugget, and Twin Creek Formations.
The Bingham 10-1 TD'd in the Nugget Formation at 10380ft MD, 10338' TVD.
Fracture gradient 0.86 psi/ft (Bingham 2-1A Nugget frac & Bingham 2-3 Nugget acid job).

Bingham 10-1 Injection Zone	Nugget
Top	9692' MD, 9657' TVD
Base	10710' MD, 10665' TVD (Projected from Bingham #1; NW NW Sec 2 T2N-R7E)
Thickness	1018'
Lithology	Aeolian sandstone
Lateral extent	Present over entire field

API Number	43043300250000	43043300160000	43043300970000	43043300350000	43043300360000	43043303020000	43043303170000	43043300270000
Status	TAOIL	P&AOIL	P&ASWD	P&ASWD	OIL	OIL	OIL	P&ASWD
Well Name	Bingham	Bingham	Bingham	UPRR	UPRR	UPRR	Bingham	UPRR
Well Number	10-1	10-2	10-3	3-5	3-6	3-10	2-6H	11-1
County	SUMMIT	SUMMIT	SUMMIT	SUMMIT	SUMMIT	SUMMIT	SUMMIT	SUMMIT
State	UT	UT	UT	UT	UT	UT	UT	UT
Field Name	PINEVIEW	PINEVIEW	PINEVIEW	PINEVIEW	PINEVIEW	PINEVIEW	PINEVIEW	PINEVIEW
Township	2N	2N	2N	2N	2N	2N	2N	2N
Range	7E	7E	7E	7E	7E	7E	7E	7E
Section	10	10	10	3	3	3	2	11
Spot NS Footage	682	730	2042	673	655	1055	267	658
Spot NS Dir	FNL	FNL	FNL	FSL	FSL	FSL	FSL	FNL
Spot EW Footage	3279	1028	1895	1969	656	1395	345	570
Spot EW Dir	FWL	FWL	FWL	FWL	FEL	FEL	FWL	FWL
Surf Lat	55:38.7	55:37.9	55:25.1	55:51.8	55:52.0	55:55.9	55:48.3	55:39.4
Surf Lon	-111:08:20.44	-111:08:49.78	-111:08:38.83	-111:08:37.28	-111:08:02.90	-111:08:12.59	-111:07:49.87	-111:07:47.21
Surf X	1602017.5	1599766.1	1600603.7	1600726.9	1603364.8	1602622.4	1604364.2	1604567.2
Surf Y	14863811.1	14863731	14862436.7	14865131.6	14865152.9	14865543.7	14864772.6	14863869.1
Bot Lat	55:38.9	55:40.5	55:28.6	55:55.9	55:51.9	56:01.5	56:20.6	55:40.9
Bot Lon	-111:08:15.86	-111:08:48.73	-111:08:37.46	-111:08:37.21	-111:08:03.95	-111:08:17.52	-111:07:27.91	-111:07:47.28
Bot X	1602368.4	1599846.6	1600709.2	1600733.1	1603284.7	1602244.9	1606053.8	1604562
Bot Y	14863821.5	14863993.1	14862786.2	14865550.4	14865142.1	14866108.8	14868040.6	14864025.7
GL Elev	6764	6842	6900	6764	6917	6835	6885	6945
KB Elev	6776	6858	6916	6781	6934	6858	6907	6961
TD (MD ft)	10380	10410	10200	10330	10432	10450	12125	10650
TD (TVD ft)	10338	10391	10186	10295	10416	10413	9264	10600
TD (SSTVD ft)	-3562	-3533	-3270	-3514	-3482	-3554	-2357	-3639
Confing/Injection	Confining	Confining	Confining	Confining	Confining	Confining	Confining	Confining
Formation Name	Stump	Stump	Stump	Stump	Stump	Stump	Stump	Stump
Lithology	Sandstone and shale	Sandstone and shale	Sandstone and shale	Sandstone and shale	Sandstone and shale	Sandstone and shale	Sandstone and shale	Sandstone and shale
Top (MD ft)	6040	6236	6108	5780	6242	6157	6274	5781
Top (TVD ft)	6030	6235	6107	5776	6239	6138	6261	5777
Top (SSTVD ft)	746	623	809	1005	695	721	646	1184
Thickness	426	451	468	533	461	440	655	537
Lateral Extent	Present over entire field	Present over entire field	Present over entire field	Present over entire field	Present over entire field	Present over entire field	Present over entire field	Present over entire field
Confing/Injection	Confining	Confining	Confining	Confining	Confining	Confining	Confining	Confining

Formation Name	Pruess	Pruess	Pruess	Pruess	Pruess	Pruess	Pruess	Pruess
Lithology	Siltstone and shale	Siltstone and shale	Siltstone and shale	Siltstone and shale	Siltstone and shale	Siltstone and shale	Siltstone and shale	Siltstone and shale
Top (MD ft)	6466	6687	6576	6313	6703	6597	6929	6318
Top (TVD ft)	6455	6686	6575	6309	6699	6575	6912	6313
Top (SSTVD ft)	321	172	341	472	235	284	-5	648
Thickness	1130	1930	2139	1923	1054	1453	633	1348
Lateral Extent	Present over entire field	Present over entire field	Present over entire field	Present over entire field	Present over entire field	Present over entire field	Present over entire field	Present over entire field
Confing/Injection	Confining	Confining	Confining	Confining	Confining	Confining	Confining	Confining
Formation Name	Pruess Salt	Pruess Salt	Pruess Salt	Pruess Salt	Pruess Salt	Pruess Salt	Pruess Salt	Pruess Salt
Lithology	Salt	Salt	Salt	Salt	Salt	Salt	Salt	Salt
Top (MD ft)	7596	8617	8715	8236	7757	8050	7562	7666
Top (TVD ft)	7584	8610	8708	8225	7751	8023	7542	7656
Top (SSTVD ft)	-808	-1752	-1792	-1444	-817	-1164	-635	-695
Thickness	803	180	249	134	377	116	424	727
Lateral Extent	Present over entire field	Present over entire field	Present over entire field	Present over entire field	Present over entire field	Present over entire field	Present over entire field	Present over entire field
Confing/Injection	Confining	Confining	Confining	Confining	Confining	Confining	Confining	Confining
Formation Name	Twin Creek	Twin Creek	Twin Creek	Twin Creek	Twin Creek	Twin Creek	Twin Creek	Twin Creek
Lithology	Limestone	Limestone	Limestone	Limestone	Limestone	Limestone	Limestone	Limestone
Top (MD ft)	8399	8797	8964	8370	8134	8166	7986	8393
Top (TVD ft)	8384	8789	8957	8359	8127	8138	7963	8382
Top (SSTVD ft)	-1608	-1931	-2041	-1578	-1193	-1279	-1056	-1421
Thickness	1290	1367	1421	1244	1158	1260		1767
Lateral Extent	Present over entire field	Present over entire field	Present over entire field	Present over entire field	Present over entire field	Present over entire field	Present over entire field	Present over entire field
Confing/Injection	Injection/Disposal							
Formation Name	Nugget	Nugget	Nugget	Nugget	Nugget	Nugget	Nugget	Nugget
Lithology	Sandstone	Sandstone	Sandstone	Sandstone	Sandstone	Sandstone	Sandstone	Sandstone
Top (MD ft)	9689	10164	10385	9614	9292	9426		10160
Top (TVD ft)	9654	10146	10369	9590	9278	9395		10123
Top (SSTVD ft)	-2878	-3288	-3453	-2809	-2344	-2536		-3162
Base (MD ft)	10700	11172	11399	10629	10310	10434		11168
Base (TVD ft)	10655	11147	11372	10589	10294	10397		11104
Base (SSTVD ft)	-3879	-4289	-4456	-3808	-3360	-3538		-4143
Thickness	1011	1008	1014	1015	1018	1008		1008
Lateral Extent	Present over entire field	Present over entire field	Present over entire field	Present over entire field	Present over entire field	Present over entire field	Present over entire field	Present over entire field

Marker not reached; projected from field offsets.

GARY R. HERBERT
Governor

GREG BELL
Lieutenant Governor

State of Utah
DEPARTMENT OF NATURAL RESOURCES

MICHAEL R. STYLER
Executive Director

Division of Oil, Gas and Mining

JOHN R. BAZA
Division Director

February 11, 2010

Via e-mail: naclegal@mediaoneutah.com

Salt Lake Tribune
PO Box 45838
Salt Lake City, UT 84145

Subject: Notice of Agency Action – Citation Oil and Gas Corp. Cause No. UIC-360.1

To whom it May Concern:

Enclosed is a copy of the referenced Notice of Agency Action. Please publish the Notice, once only, as soon as possible. Please notify me via e-mail of the date it will be published. My e-mail address is: jsweet@utah.gov. Please send proof of publication and billing for **account #D5385340L** to:

Division of Oil, Gas and Mining
Suite 1210
PO Box 145801
Salt Lake City, UT 84114-5801

Sincerely,

Jean Sweet

Jean Sweet
Executive Secretary

Enclosure

From: "classifieds@parkrecord.com" <classifieds@parkrecord.com>
To: <jsweet@utah.gov>
Date: 2/11/2010 2:20 PM
Subject: LEGAL FOR PARK RECORD
Attachments: Part.001

Jean,

Legal sent will publish 2/17/10 in the Park Record and online at utahlegals.com. Total cost for publication will be $95.40. Proof of publication will be sent after print.

Thanks,
Ashlee Thomas
The Park Record Newspaper
Classified Advertising
Ph: 435-649-9014
Direct: 435-776-7725
Fax: 435-649-4942
classads@parkrecord.com
•Classified deadlines are Monday & Thursday @ 10am

GARY R. HERBERT
Governor

GREG BELL
Lieutenant Governor

State of Utah

DEPARTMENT OF NATURAL RESOURCES

MICHAEL R. STYLER
Executive Director

Division of Oil, Gas and Mining

JOHN R. BAZA
Division Director

February 11, 2010

Via e-mail: editor@parkrecord.com

Park Record
1670 Bonanza Drive
P.O. Box 3688
Park City, UT 84060

Subject: Notice of Agency Action – Citation Oil and Gas Corp. Cause No. UIC-360.1

To whom it May Concern:

Enclosed is a copy of the referenced Notice of Agency Action. Please publish the Notice, once only, as soon as possible. Please notify me via e-mail of the date it will be published. My e-mail address is: jsweet@utah.gov. Please send proof of publication and billing to:

Division of Oil, Gas and Mining
Suite 1210
PO Box 145801
Salt Lake City, UT 84114-5801

Sincerely,

Jean Sweet

Jean Sweet
Executive Secretary

Enclosure

BEFORE THE DIVISION OF OIL, GAS AND MINING
DEPARTMENT OF NATURAL RESOURCES
STATE OF UTAH
NOTICE OF AGENCY ACTION
CAUSE NO. UIC-360.1

IN THE MATTER OF THE APPLICATION OF CITATION OIL & GAS CORP. FOR ADMINISTRATIVE APPROVAL OF THE BINGHAM 10-1 WELL, LOCATED IN SECTION 10, TOWNSHIP 2N, RANGE 7E, SUMMIT COUNTY, UTAH, AS A CLASS II INJECTION WELL

THE STATE OF UTAH TO ALL PERSONS INTERESTED IN THE ABOVE ENTITLED MATTER.

Notice is hereby given that the Division of Oil, Gas and Mining (the "Division") is commencing an informal adjudicative proceeding to consider the application of Citation Oil & Gas Corp. for administrative approval of the Bingham 10-1 well, located in NW/4 NE/4, Section 10, Township 2N, Range 7E, Salt Lake Meridian, Summit County, Utah, for conversion to a Class II injection well. The proceeding will be conducted in accordance with Utah Admin. Rule R649-10, Administrative Procedures.

Selected zones in the Nugget Sandstone will be used for water disposal by injection. The maximum requested injection pressure and rate will be determined based on fracture gradient information submitted by Citation Oil & Gas Corp.

Any person desiring to object to the proposed application or otherwise intervene in the proceeding must file a written protest or notice of intervention with the Division within fifteen days following publication of this notice. The Division's Presiding Officer for the proceeding is Gil Hunt, Associate Director, at P.O. Box 145801, Salt Lake City, Utah 84114-5801, phone number (801) 538-5340. If such a protest or notice of intervention is received, a hearing will be scheduled in accordance with the aforementioned administrative procedure rule. Protestants and/or interveners should be prepared to demonstrate at the hearing how this matter affects their interests.

Dated this 11th day of February, 2010

STATE OF UTAH
DIVISION OF OIL, GAS & MINING

Gil Hunt
Associate Director

Citation Oil & Gas Corp.

Bingham 10-1
Cause No. UIC-360.1

Publication Notices were sent to the following:

Bridget Lisenbe, Permitting Analyst
Citation Oil & Gas Corp.
P. O. Box 690688
Houston, TX 77269

Park Record
1670 Bonanza Drive
P.O. Box 3688
Park City, UT 84060
via e-mail editor@parkrecord.com

Salt Lake Tribune
P.O. Box 45838
Salt Lake City, UT 84145
via e-mail naclegal@mediaoneutah.com

Summit County Commissioner
Summit County Court House
Coalville, UT 84017

Bruce Suchomel
US EPA Region VIII
MS 8-P-W-GW
1595 Wynkoop Street
Denver, CO 80202-1129

Jan Sweet

Jean Sweet - RE: Notice of Agency Action - Citation Oil and Gas Corp. Cause No. UIC 360.1 Bingham 10-1

From: "NAC Legal" <naclegal@mediaoneutah.com>
To: "'Jean Sweet'" <jsweet@utah.gov>
Date: 2/11/2010 10:20 AM
Subject: RE: Notice of Agency Action - Citation Oil and Gas Corp. Cause No. UIC 360.1 Bingham 10-1

Ad #547393 is scheduled to run February 15 in Salt Lake Tribune, Deseret News and on the website utahlegals.com .

Total charge is $130.00. Please check the ad in the paper.

Thank you,

Lynn Valdez

MediaOne of Utah,

a Newspaper Agency Company

4770 South 5600 West

West Valley City, Utah 84118

Ph.: 801-237-2720

Email: naclegal@mediaoneutah.com

From: Jean Sweet [mailto:jsweet@utah.gov]
Sent: Thursday, February 11, 2010 9:56 AM

To: naclegal@mediaoneutah.com
Subject: Notice of Agency Action - Citation Oil and Gas Corp. Cause No. UIC 360.1 Bingham 10-1

To whom it May Concern:

Enclosed is a copy of the referenced Notice of Agency Action. Please publish the Notice, once only, as soon as possible. Please notify me via e-mail of the date it will be published. My e-mail address is: jsweet@utah.gov. Please send proof of publication and billing for **account #D5385340L** to:

Division of Oil, Gas and Mining
Suite 1210
PO Box 145801
Salt Lake City, UT 84114-5801

Sincerely,

Jean Sweet, Executive Secretary
Utah Div. of Oil, Gas & Mining
1594 West Temple, Suite 1210
Salt Lake City, UT
801-538-5329
jsweet@utah.gov

From: Armando Lopez-Rocha <ALopez-Rocha@cogc.com>
To: Mark Reinbold <markreinbold@utah.gov>
CC: Mark Bing <MBing@cogc.com>, John Parker <JParker@cogc.com>, Susan James ...
Date: 2/17/2010 4:03 PM
Subject: RE: Bingham #10-1 - Requested Documents
Attachments: Bingham #10-2 - P&A well.pptx

Mark,

Attached is a wellbore schematic for you to review on the Bingham 10-2 well (P&Ad). Based on the P&A information and the condition of the wellbore at the time of the plugging, the Bingham 10-2 (P&Ad) should not have a major wellbore fluid migration problem by converting the Bingham 10-1 to a water disposal well. Please let me know should you have any other questions or concerns.

Thank you,

Armando Lopez
Production Engineer
Central Region
Citation Oil & Gas Corp.
281.387.0311 (Cell)
281.891.1484 (Office)

From: Mark Reinbold [mailto:markreinbold@utah.gov]
Sent: Wednesday, February 10, 2010 9:59 AM
To: Armando Lopez-Rocha
Subject: Re: Bingham #10-1 - Requested Documents

Armando,

I received your email and have succeeded in printing things. Thank you. I am compiling a list of some additional questions, and I will be getting back to you soon.

Mark L. Reinbold, Environmental Scientist
Utah Department of Natural Resources
Division of Oil, Gas & Mining
1594 W North Temple
PO Box 145801
Salt Lake City, UT 84114-5801
Phone 801-538-5333
Fax 801-539-3940

>>> Armando Lopez-Rocha <ALopez-Rocha@cogc.com> 2/9/2010 12:57 PM >>>
Mark,

Please find attached a Nugget structure map, 5-well cross-section, list of Pineview wells with noted producing/injecting zones, and Bingham #10-1's CBL log (tif format).
In case you have trouble opening the TIF file, below is a website to download a program that will help you view an image document.

http://www.irfanview.com/

Please let me know should you have any questions or concerns.

Regards,

Armando Lopez
Production Engineer
Central Region
Citation Oil & Gas Corp.
281.387.0311 (Cell)
281.891.1484 (Office)

Citation OIL & GAS CORP.

WELLBORE DIAGRAM AND INFORMATION

Well Name: Bingham 10-2
Field: Pineview
Location: 730' FNL , 1028 FWL NWNW
County: Summit
State: Utah

D&C:	
P&A:	12/1989
Elevation:	6842' (GL), 6858' KB
KB:	16'
APR#	43-043-30061~~6~~16

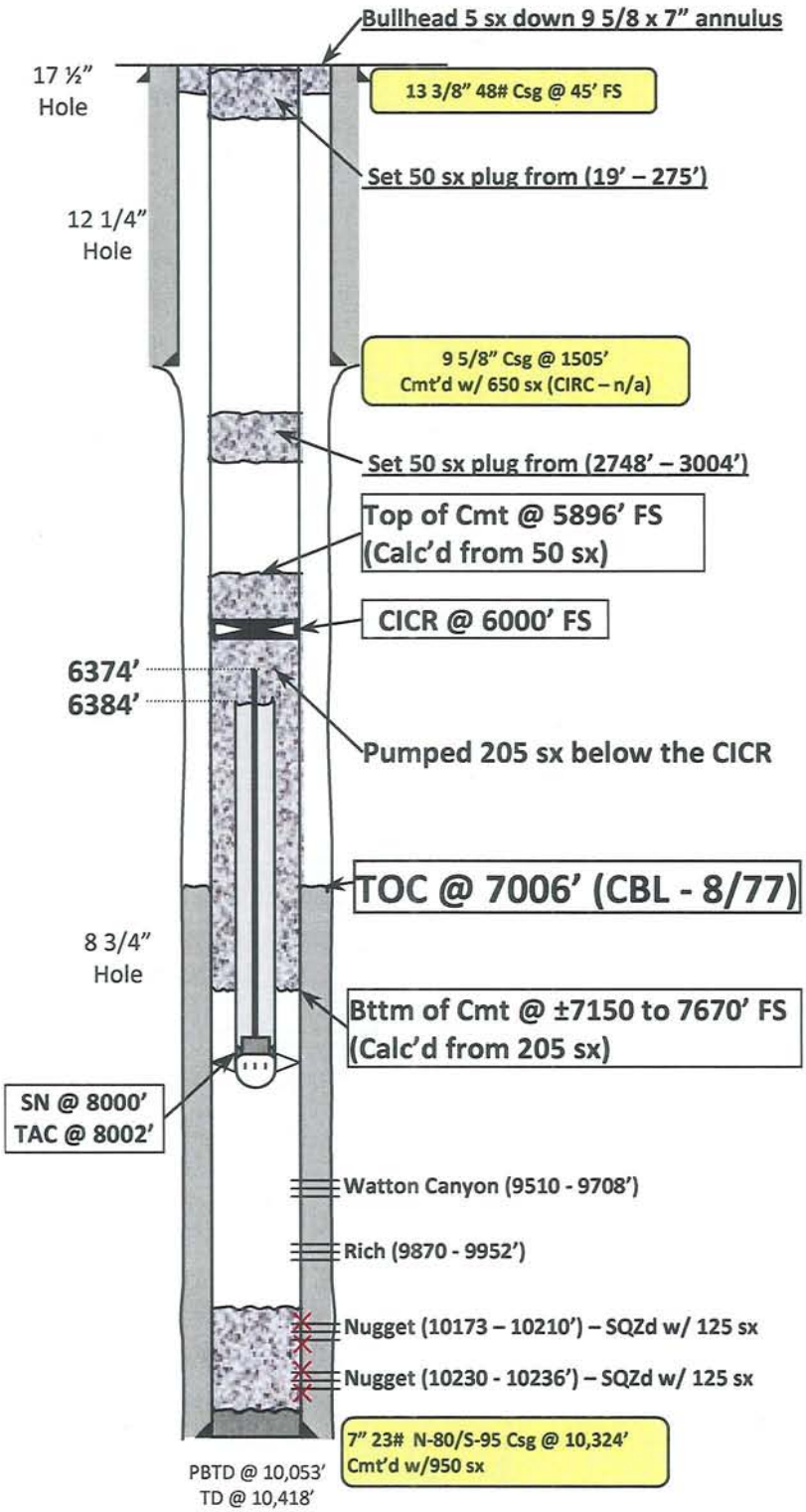

As per the diagram, the Bingham 10-2 well was adequately plug to prevent any fluid migration up the wellbore.

Should you have any questions or concerns, please call at 281-891-1484.

Thank you,

Armando Lopez

Production Engineer
Central Region
Citation Oil & Gas Corp.

AFFIDAVIT OF PUBLICATION

RECEIVED

FEB 22 2010

DIV. OF OIL, GAS & MINING

STATE OF UTAH
County of Summit

I, Ashlee Thomas, Ashlee Thomas **, being first duly sworn. Depose and say that I am the Classifieds Manager of The Park Record, a bi-weekly newspaper of general circulation, in Park City, Utah, Summit County. The notice attached hereto and which is a/an:**

"BEFORE THE DIVISION OF OIL, GAS AND MINING"

Was published in said newspaper (The Park Record) and posted online at www.utahlegels.com, for 1 **consecutive week(s), the first publication having been the day** 17 **of** February **,** 2010 **, and the last on the day** 17 **of** February **,** 2010 **, that said notice was published in the regular and entire issue of every number of the paper during the period of times of publication and the same was published in the newspaper and not in the supplement. Total cost for this Advertisement is:**

$ 95.40 **Reference Billing Number:** 02602928

Subscribed and sworn to be this 17 **day of** February 2010 **.**

Kate Fischer

KATE FISCHER
NOTARY PUBLIC - STATE OF UTAH
My Comm. Exp. 10/14/2012
Commission # 576192

BEFORE THE DIVISION OF OIL, GAS AND MINING
DEPARTMENT OF NATURAL RESOURCES
STATE OF UTAH
NOTICE OF AGENCY ACTION
CAUSE NO. UIC-360.1

IN THE MATTER OF THE APPLICATION OF CITATION OIL & GAS CORP. FOR ADMINISTRATIVE APPROVAL OF THE BINGHAM 10-1 WELL, LOCATED IN SECTION 10, TOWNSHIP 2N, RANGE 7E, SUMMIT COUNTY, UTAH, AS A CLASS II INJECTION WELL

THE STATE OF UTAH TO ALL PERSONS INTERESTED IN THE ABOVE ENTITLED MATTER.

Notice is hereby given that the Division of Oil, Gas and Mining (the "Division") is commencing an informal adjudicative proceeding to consider the application of Citation Oil & Gas Corp. for administrative approval of the Bingham 10-1 well, located in NW/4 NE/4, Section 10, Township 2N, Range 7E, Salt Lake Meridian, Summit County, Utah, for conversion to a Class II injection well. The proceeding will be conducted in accordance with Utah Admin. Rule R649-10, Administrative Procedures.

Selected zones in the Nugget Sandstone will be used for water disposal by injection. The maximum requested injection pressure and rate will be determined based on fracture gradient information submitted by Citation Oil & Gas Corp.

Any person desiring to object to the proposed application or otherwise intervene in the proceeding must file a written protest or notice of intervention with the Division within fifteen days following publication of this notice. The Division's Presiding Officer for the proceeding is Gil Hunt, Associate Director, at P.O. Box 145801, Salt Lake City, Utah 84114-5801, phone number (801) 538-5340. If such a protest or notice of intervention is received, a hearing will be scheduled in accordance with the aforementioned administrative procedure rule. Protestants and/or interveners should be prepared to demonstrate at the hearing how this matter affects their interests.

Dated this 11th day of February, 2010

STATE OF UTAH
DIVISION OF OIL, GAS & MINING

/s/
Gil Hunt
Associate Director

February 11, 2010

PUBLISHED IN THE PARK RECORD ON WEDNESDAY FEBRUARY 17, 2010.

4770 S. 5600 W.
P.O. POX 704005
WEST VALLEY CITY, UTAH 84170
FED.TAX I.D.# 87-0217663

The Salt Lake Tribune MEDIA One of Utah A NEWSPAPER AGENCY COMPANY Morning News

PROOF OF PUBLICATION

CUSTOMER'S COPY

CUSTOMER NAME AND ADDRESS	ACCOUNT NUMBER	DATE
DIV OF OIL-GAS & MINING, 1594 W NORTH TEMP #1210 P.O. BOX 145801 SALT LAKE CITY, UT 84114	9001402352	2/16/2010

ACCOUNT NAME	
DIV OF OIL-GAS & MINING,	
TELEPHONE	ADORDER# / INVOICE NUMBER
8015385340	0000547393 /
SCHEDULE	
Start 02/15/2010	End 02/15/2010
CUST. REF. NO.	
Cause #UIC-360.1	
CAPTION	
BEFORE THE DIVISION OF OIL, GAS AND MINI	
SIZE	
50 Lines	2.00 COLUMN
TIMES	RATE
3	
MISC. CHARGES	AD CHARGES
	TOTAL COST
	130.00

BEFORE THE DIVISION OF OIL, GAS AND MINING
DEPARTMENT OF NATURAL RESOURCES
STATE OF UTAH
NOTICE OF AGENCY ACTION
CAUSE NO. UIC-360.1

IN THE MATTER OF THE APPLICATION OF CITATION OIL & GAS CORP. FOR ADMINISTRATIVE APPROVAL OF THE BINGHAM 10-1 WELL, LOCATED IN SECTION 10, TOWNSHIP 2N, RANGE 7E, SUMMIT COUNTY, UTAH, AS A CLASS II INJECTION WELL

THE STATE OF UTAH TO ALL PERSONS INTERESTED IN THE ABOVE ENTITLED MATTER.

Notice is hereby given that the Division of Oil, Gas and Mining (the "Division") is commencing an informal adjudicative proceeding to consider the application of Citation Oil & Gas Corp. for administrative approval of the Bingham 10-1 well, located in NW/4 NE/4, Section 10, Township 2N, Range 7E, Salt Lake Meridian, Summit County, Utah, for conversion to a Class II injection well. The proceeding will be conducted in accordance with Utah Admin. Rule R649-10, Administrative Procedures.

Selected zones in the Nugget Sandstone will be used for water disposal by injection. The maximum requested injection pressure and rate will be determined based on fracture gradient information submitted by Citation Oil & Gas Corp.

Any person desiring to object to the proposed application or otherwise intervene in the proceeding must file a written protest or notice of intervention with the Division within fifteen days following publication of this notice. The Division's Presiding Officer for the proceeding is Gil Hunt, Associate Director, at P.O. Box 145801, Salt Lake City, Utah 84114-5801, phone number (801) 538-5340. If such a protest or notice of intervention is received, a hearing will be scheduled in accordance with the aforementioned administrative procedure rule. Protestants and/or interveners should be prepared to demonstrate at the hearing how this matter affects their interests.

Dated this 11th day of February, 2010

STATE OF UTAH
DIVISION OF OIL, GAS & MINING
/s/ Gil Hunt
Gil Hunt
Associate Director

547393 UPAXLP

AFFIDAVIT OF PUBLICATION

AS NEWSPAPER AGENCY CORPORATION LEGAL BOOKER, I CERTIFY THAT THE ATTACHED ADVERTISEMENT OF **BEFORE THE DIVISION OF OIL, GAS AND MINI** FOR **DIV OF OIL-GAS & MINING,** WAS PUBLISHED BY THE NEWSPAPER AGENCY CORPORATION, AGENT FOR THE SALT LAKE TRIBUNE AND DESERET NEWS, DAILY NEWSPAPERS PRINTED IN THE ENGLISH LANGUAGE WITH GENERAL CIRCULATION IN UTAH, AND PUBLISHED IN SALT LAKE CITY, SALT LAKE COUNTY IN THE STATE OF UTAH. NOTICE IS ALSO POSTED ON UTAHLEGALS.COM ON THE SAME DAY AS THE FIRST NEWSPAPER PUBLICATION DATE AND REMAINS ON UTAHLEGALS.COM INDEFINATELY.

PUBLISHED ON Start 02/15/2010 End 02/15/2010

SIGNATURE Jenny Craft

DATE 2/16/2010

Elizabeth G Cordova
Notary Public, State of Utah
Commission #581304
My Commission Expires
January 16, 2014

Elizabeth G Cordova

THIS IS NOT A STATEMENT BUT A "PROOF OF PUBLICATION"
PLEASE PAY FROM BILLING STATEMENT

Mark Reinbold 2/19/10

State of Utah

Department of Natural Resources

Dear Mark,

Enclosed are two cross sections across Pineview Field – one in an east-west direction and one in a north-south direction. I have illustrated both of these cross sections as a structure section and a stratigraphic section with the Nugget Formation as the datum. Also enclosed is a structure map on top of the Nugget Formation. Hopefully I have included the details that you requested when we spoke on the phone yesterday.

I will instruct John Parker and Armando Lopez-Rocha to call Dustin Doucet in case Dustin has any additional questions to discuss.

Thank you for your attention to our request for additional water disposal at Pineview Field!

Regards,

Susan James

Geology Manager

Citation Oil & Gas Corp

14077 Cutten Rd.

Houston, TX 77069

281 891-1326

sjames@cogc.com

RECEIVED
FEB 2 2 2010
DIV. OF OIL, GAS & MINING

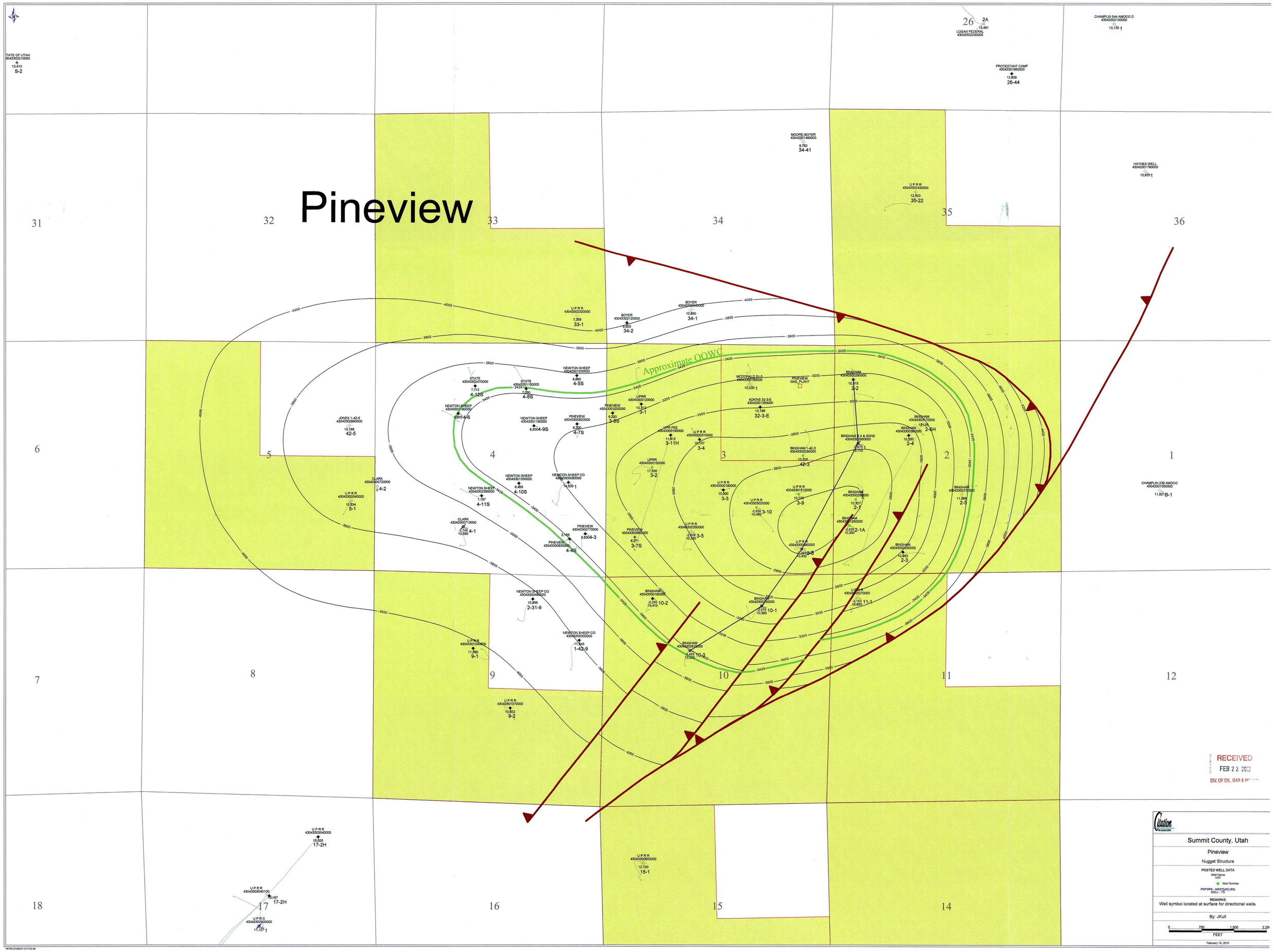
Pineview
Approximate OOWC
31
32
33
34
35
36
6
5
4
3
2
1
7
8
9
10
11
12
18
17
16
15
14
RECEIVED
FEB 2 2 2010
DIV. OF OIL, GAS & MINING
Citation
Summit County, Utah
Pineview
Nugget Structure
POSTED WELL DATA
Well Name
UWI
Well Number
FMTOPS - NGGTLIKI (SS)
WELL - TD
REMARKS
Well symbol located at surface for directional wells.
By: JKull
0
750
1,500
2,250
FEET
February 19, 2010

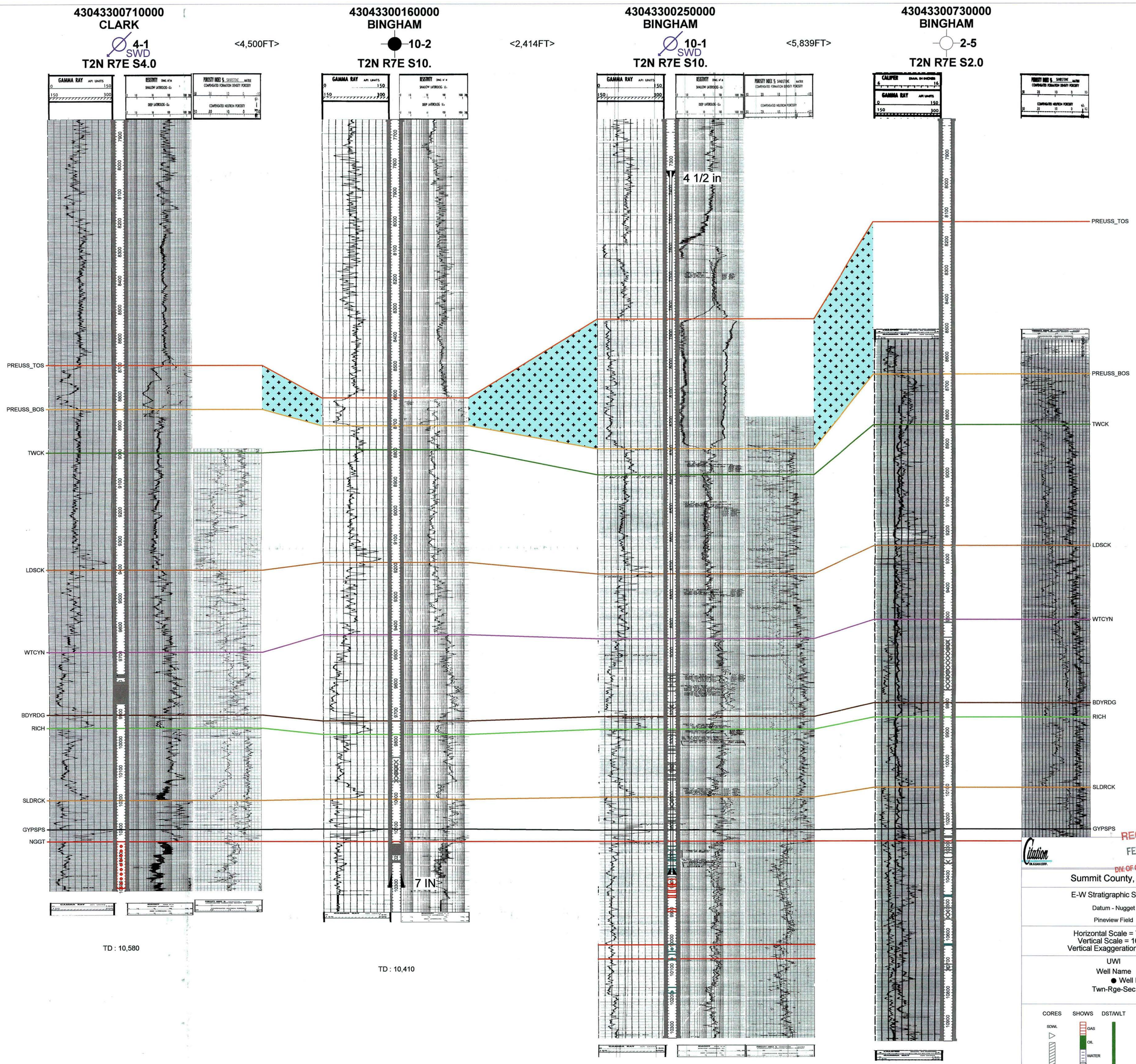

RECEIVED
FEB 22 2010
DIV. OF OIL, GAS & MINING

Citation Oil & Gas Corp.

Summit County, Utah

E-W Stratigraphic Section

Datum - Nugget

Pineview Field

Horizontal Scale = 713.7
Vertical Scale = 160.0
Vertical Exaggeration = 4.5x

UWI
Well Name
● Well Number
Twn-Rge-Sec

CORES: SDWL
SHOWS: GAS, OIL, WATER, OTHER
DST/WLT
IP
CASING
LINER
PERFS: ACTIVE, INACTIVE, OPENHOLE, BRIDGEPLUG, PMACPLUG, PACKER, PROPOSED, SQUEEZED, JUNK

February 19,2010 11:09 AM

HS=714

PETRA 2/19/2010 11:09:54 AM

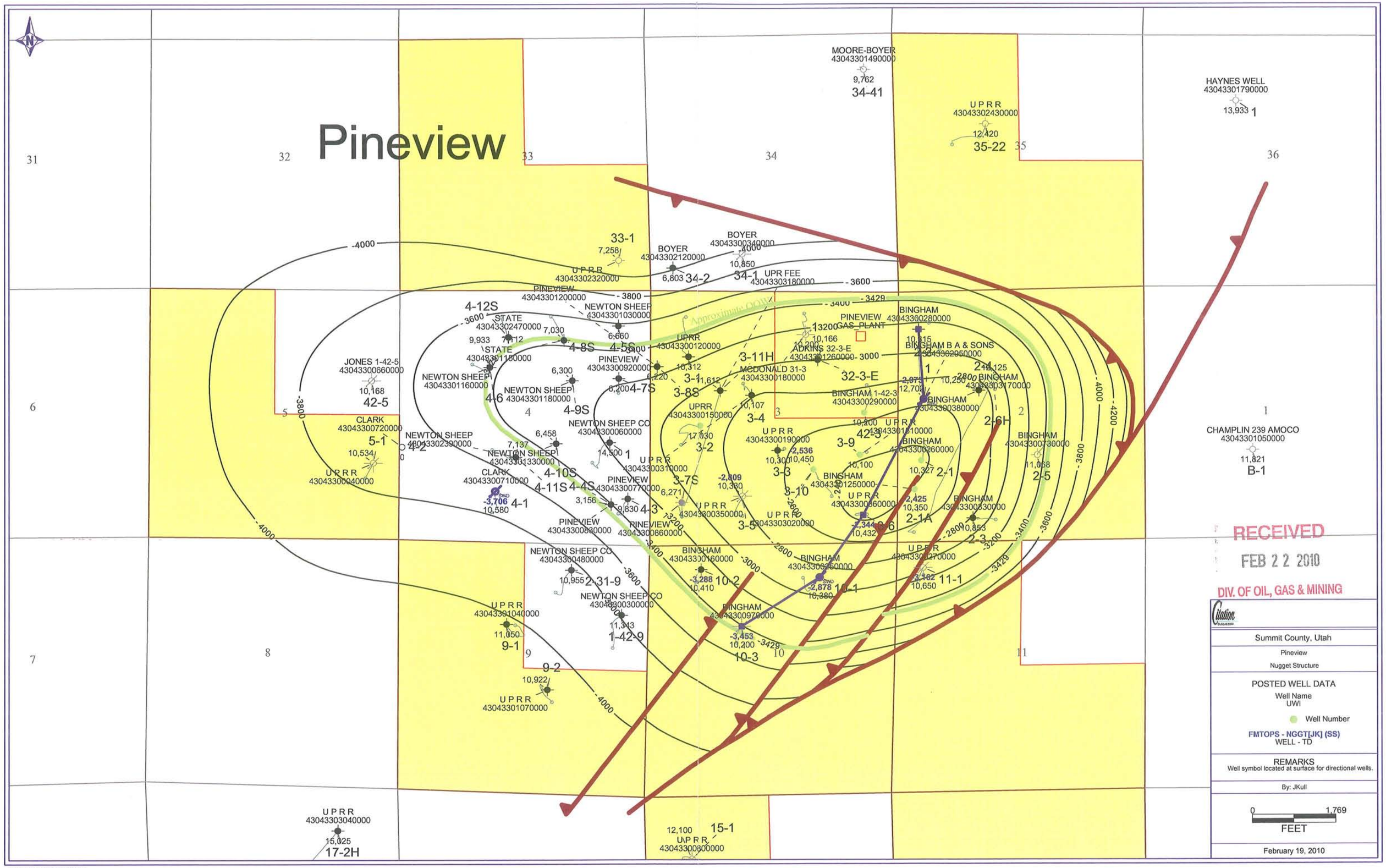

RECEIVED
FEB 22 2010
DIV. OF OIL, GAS & MINING

Citation

Summit County, Utah

Pineview

Nugget Structure

POSTED WELL DATA

Well Name
UWI

Well Number

FMTOPS - NGGT[JK] (SS)
WELL - TD

REMARKS
Well symbol located at surface for directional wells.

By: JKull

0 1,769
FEET

February 19, 2010

PETRA 2/19/2010 10:33:59 AM

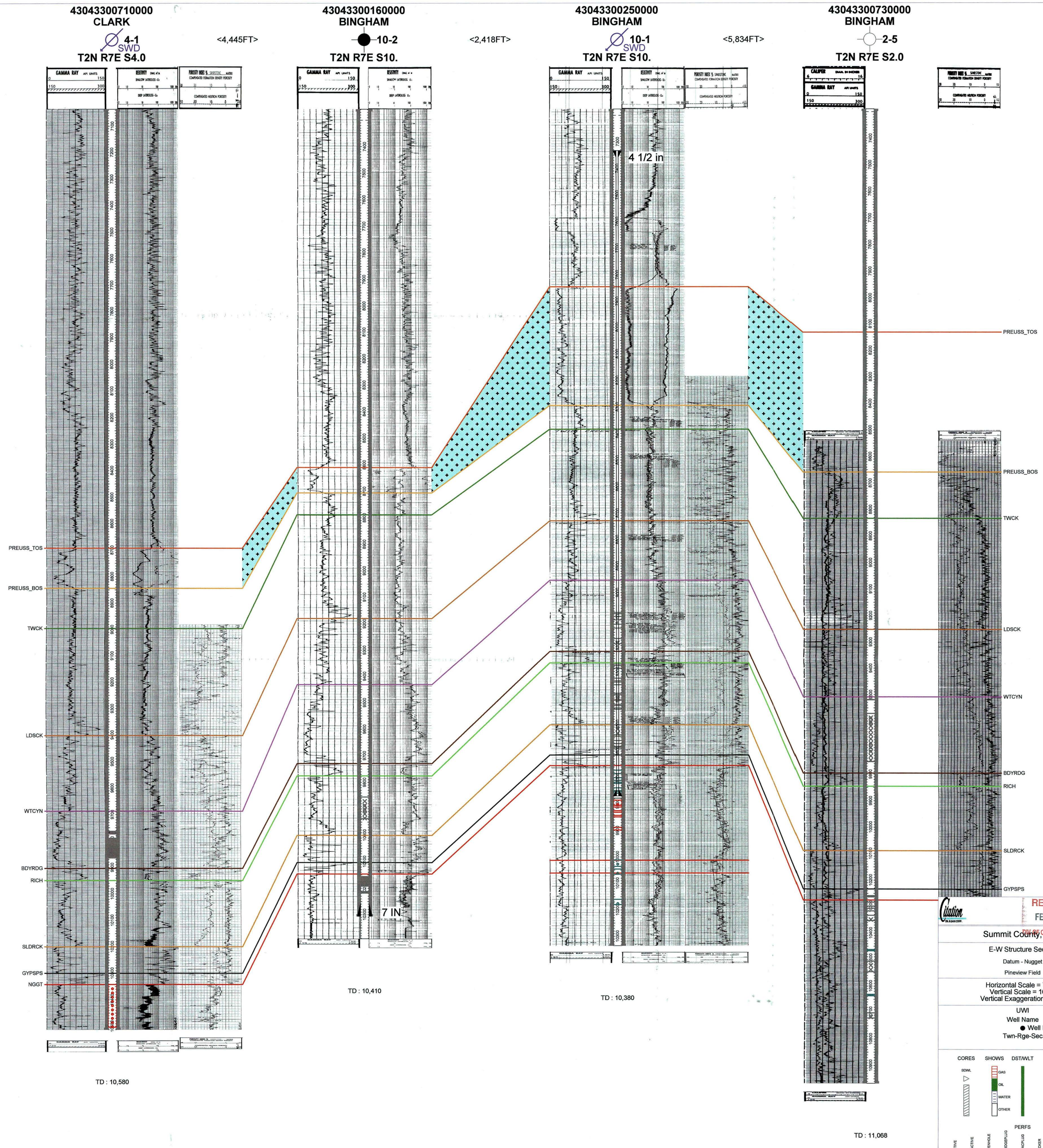

Citation Oil & Gas Corp.

RECEIVED
FEB 22 2010
DIV. OF OIL, GAS & MINING

Summit County, Utah

E-W Structure Section

Datum - Nugget

Pineview Field

Horizontal Scale = 713.7
Vertical Scale = 160.0
Vertical Exaggeration = 4.5x

UWI
Well Name
● Well Number
Twn-Rge-Sec

CORES SHOWS DST/WLT IP CASING

SDWL GAS OIL WATER OTHER LINER

PERFS

ACTIVE INACTIVE OPENHOLE BRIDGEPLUG FRACPLUG PACKER PROPOSED SQUEEZED JUNK

February 19,2010 10:58 AM

HS=714

PETRA 2/19/2010 10:58:10 AM

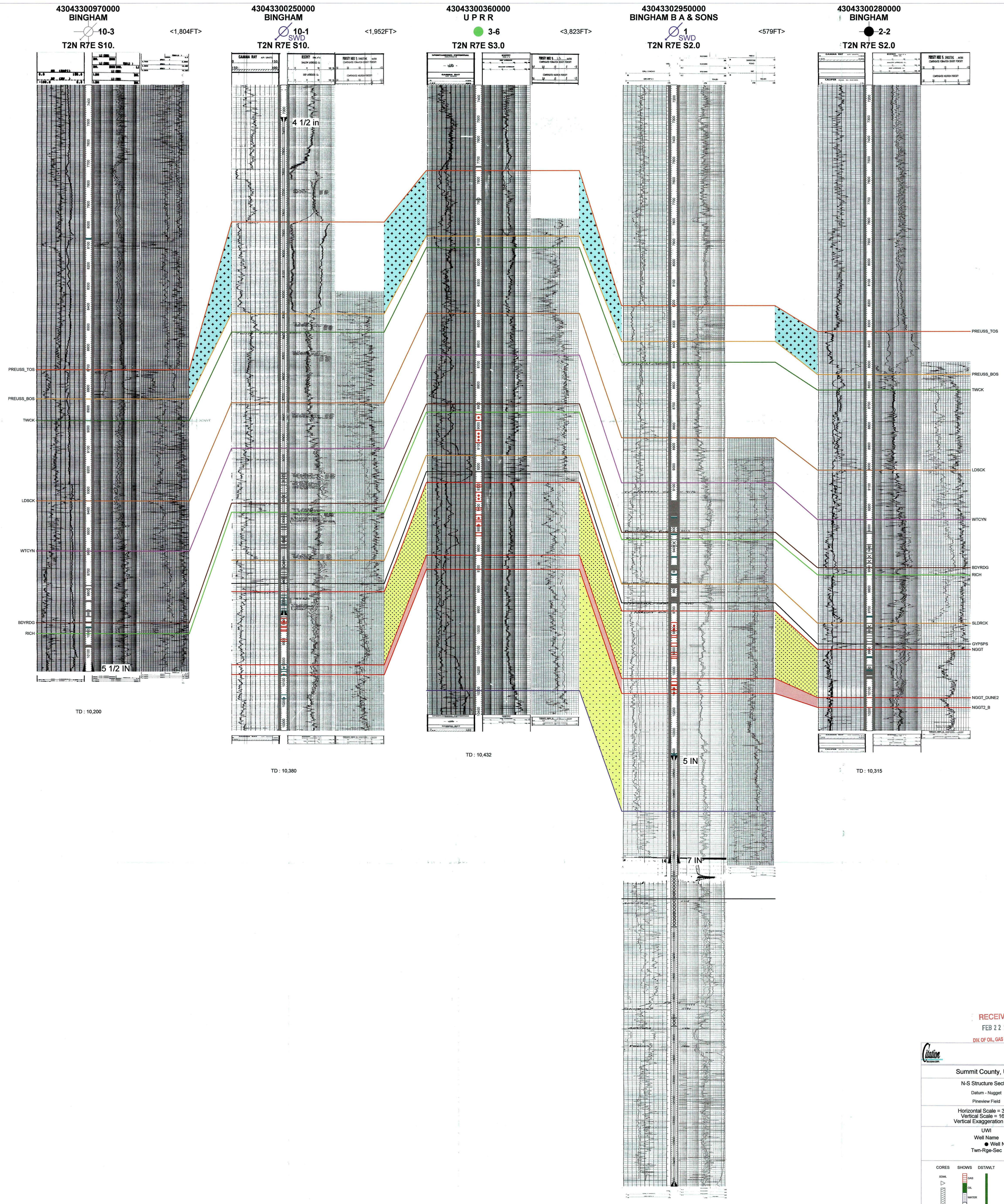

RECEIVED
FEB 22 2010
DIV. OF OIL, GAS & MINING

Summit County, Utah

N-S Structure Section

Datum - Nugget

Pineview Field

Horizontal Scale = 345.7
Vertical Scale = 160.0
Vertical Exaggeration = 2.2x

UWI
Well Name
● Well Number
Twn-Rge-Sec

CORES: SDWL
SHOWS: GAS, OIL, WATER, OTHER
DST/WLT
IP
CASING
LINER
PERFS: ACTIVE, INACTIVE, OPENHOLE, BRIDGEPLUG, FRACPLUG, PACKER, PROPOSED, SQUEEZED, JUNK

February 19,2010 11:12 AM

HS=346

PETRA 3/19/2010 11:12:38 AM

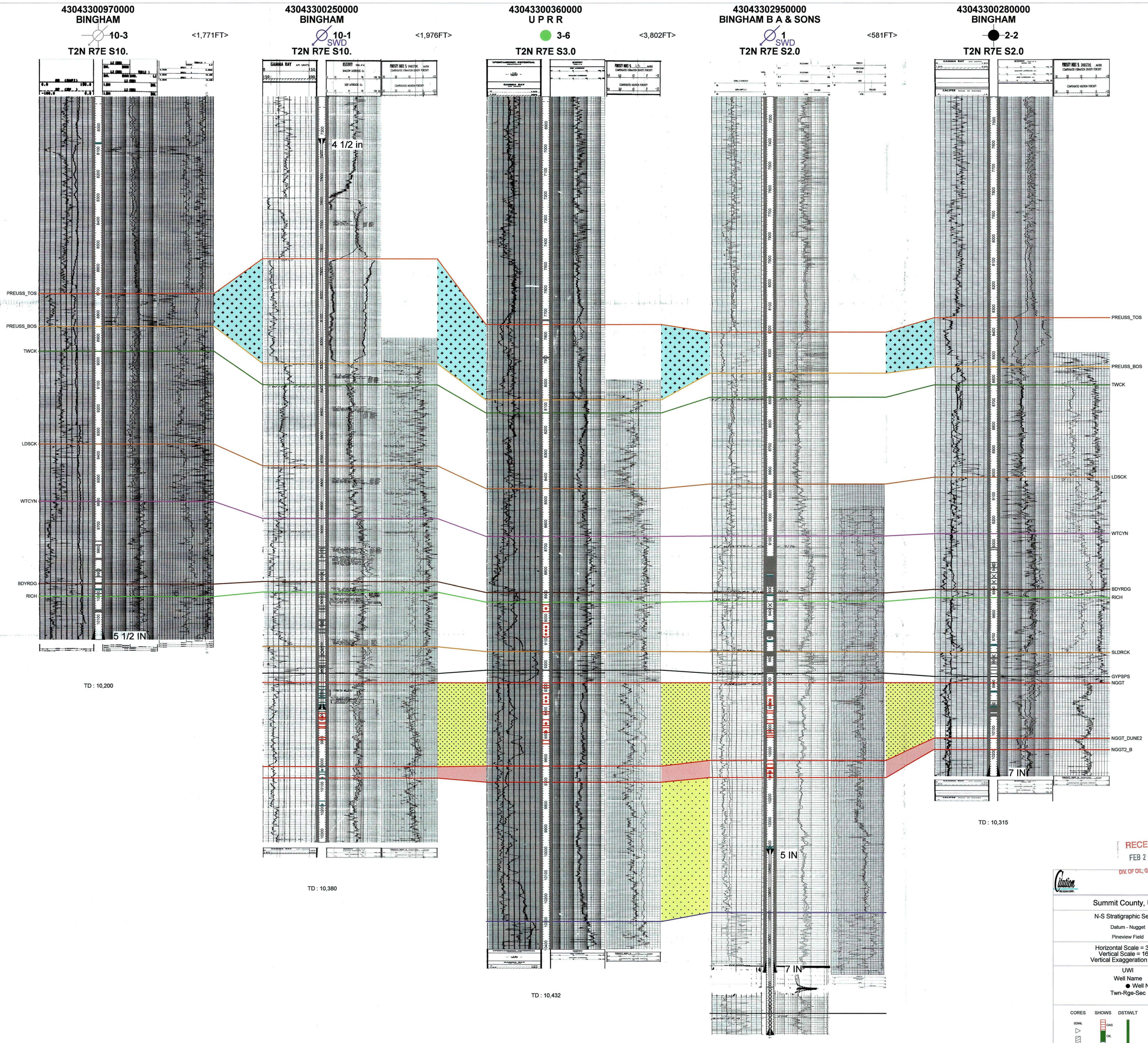

RECEIVED
FEB 22 2010
DIV. OF OIL, GAS & MINING

Summit County, Utah

N-S Stratigraphic Section

Datum - Nugget

Pineview Field

Horizontal Scale = 345.7
Vertical Scale = 160.0
Vertical Exaggeration = 2.2x

UWI
Well Name
● Well Number
Twn-Rge-Sec

CORES SHOWS DST/WLT IP CASING
SDWL GAS OIL WATER OTHER LINER
PERFS
ACTIVE INACTIVE OPENHOLE BRIDGEPLUG FRACPLUG PACKER PROPOSED SQUEEZED JUNK

February 19,2010 11:11 AM

HS=346

PETRA 2/19/2010 11:11:25 AM

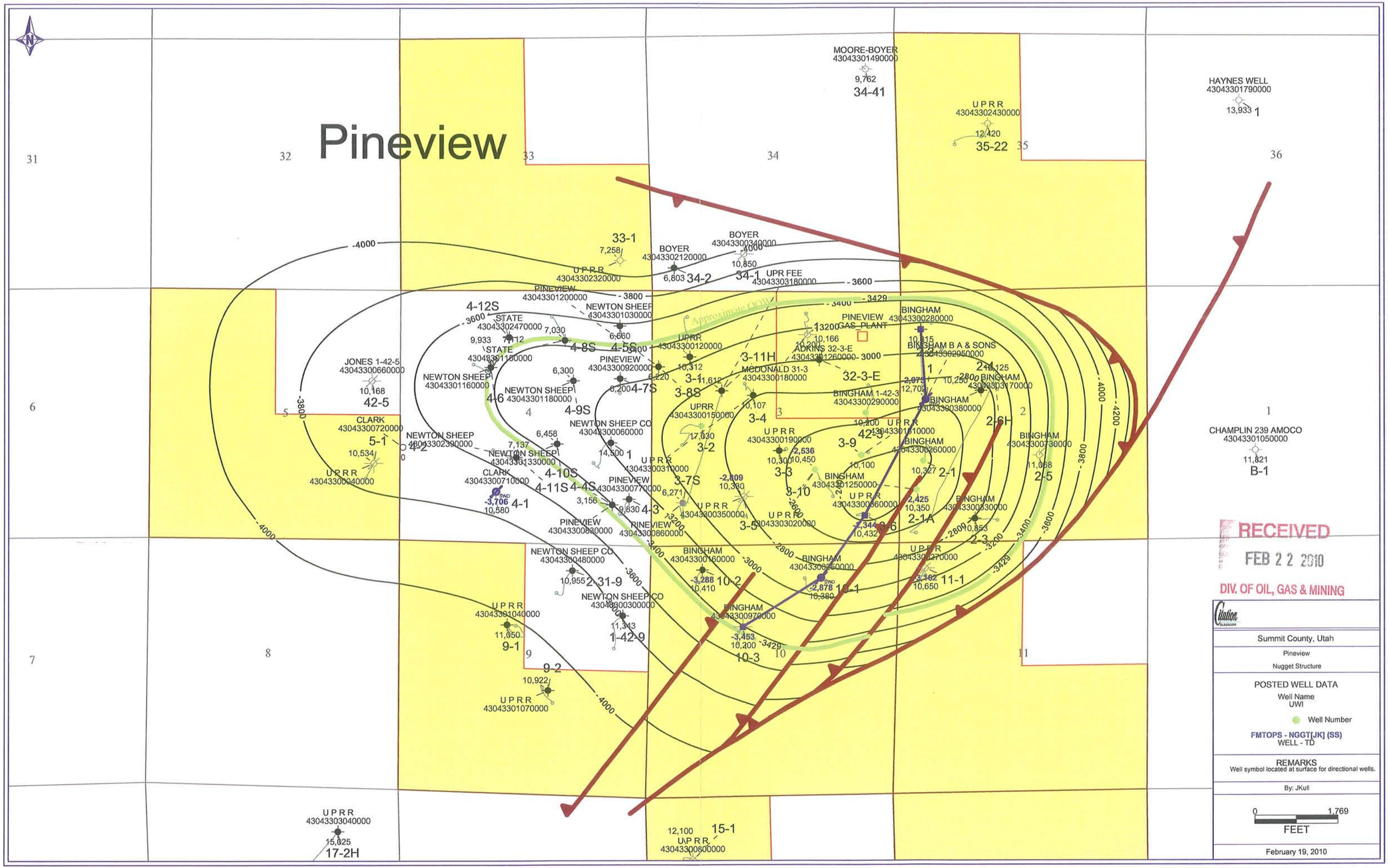

RECEIVED
FEB 22 2010
DIV. OF OIL, GAS & MINING

Summit County, Utah

Pineview

Nugget Structure

POSTED WELL DATA

Well Name
UWI

Well Number

FMTOPS - NGGT[JK] (SS)
WELL - TD

REMARKS
Well symbol located at surface for directional wells.

By: JKull

0 1,769
FEET

February 19, 2010

PETRA 2/19/2010 10:33:59 AM

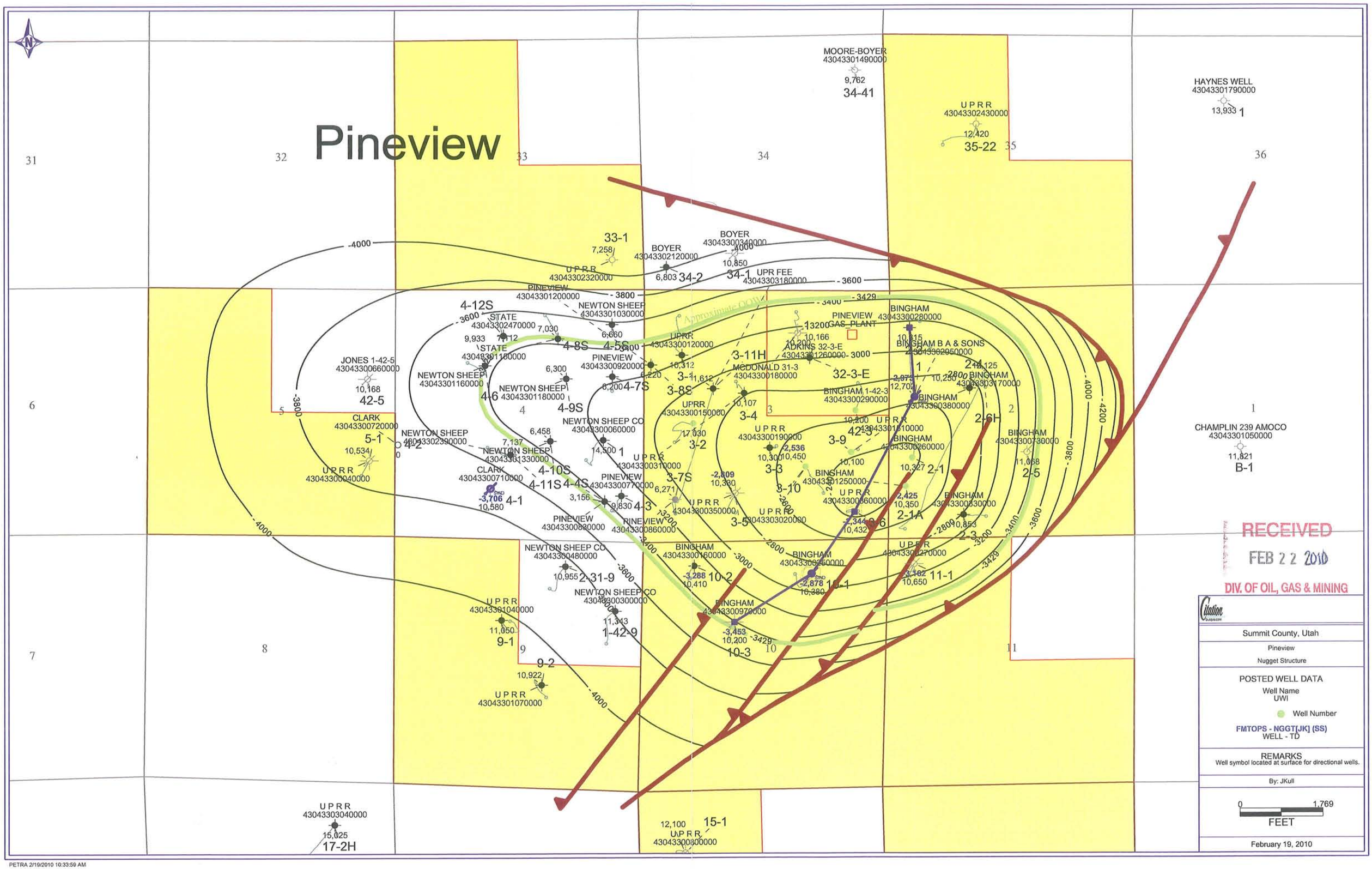

PETRA 2/19/2010 10:33:59 AM

Mark Reinbold - Pineview Field - Producing/Injection Interval Depths

From: Armando Lopez-Rocha <ALopez-Rocha@cogc.com>
To: Mark Reinbold <markreinbold@utah.gov>
Date: 2/23/2010 7:29 AM
Subject: Pineview Field - Producing/Injection Interval Depths
CC: Mark Bing <MBing@cogc.com>, Susan James <SJames@cogc.com>, John Parker <...

Mark,

As per your request, find below the producing/injection intervals as both measured depths (MD) and sub-surface true vertical depths (SSTVD).

Pineview Field							
				Active Interval (MD)		**Active Interval (SSTVD)**	
Well Name	**Producing/Injection Interval**	**Elev. GL**	**Elev. KB**	**Top**	**Bottom**	**Top**	**Bottom**
BINGHAM 2-1	NUGGET SANDSTONE	6810	6827	9255	9333	-2428	-2506
BINGHAM 2-1A	NUGGET SANDSTONE	6864	6880	9431	9507	-2551	-2627
BINGHAM 2-6H 43-043-30317	TWIN CREEK (WATTON CANYON)	6885	6907	9264	9264	-2357	-2357
BINGHAM 10-1 **	TWIN CREEK & NUGGET SANDSTONE	6764	6776	9300	10220	-2524	-3444
BINGHAM 1-42-3 (2-7)	NUGGET SANDSTONE	6684	6699	9428	9514	-2729	-2815
BINGHAM, B A & SONS INC 1 SWD	NUGGET SANDSTONE	6708	6732	9830	10190	-3098	-3458
CLARK 4-1 SWD	NUGGET SANDSTONE	6619	6636	10368	10530	-3732	-3894
UPRR 3- 2	NUGGET SANDSTONE	6581	6606	9600	9727	-2994	-3121
UPRR 3- 6 43-043-30036	TWIN CREEK (RICH) &	6917	6934	8954	9094	-2020	-2160
	NUGGET SANDSTONE	6917	6934	9303	9553	-9303	-9553
UPRR 3- 9	TWIN CREEK (SLIDEROCK)	6845	6862	9141	9240	-2279	-2378
UPRR 3-10 43-043-30302	NUGGET SANDSTONE	6835	6859	9430	9542	-2571	-2683
*** Under the plans to convert the Bingham #10-1 to SWD well in the Twin Creek/Nugget Sandstone zones*							

Please let me know if you have any questions.

Thank you,

Armando Lopez
Production Engineer
Central Region
Citation Oil & Gas Corp.
281.387.0311 (Cell)
281.891.1484 (Office)

Chris Kierst - Bingham #10-1: CBL Log dated 8/31/76

From: Armando Lopez-Rocha <ALopez-Rocha@cogc.com>
To: "Chriskierst@utah.gov" <Chriskierst@utah.gov>, Mark Reinbold <markreinbo...
Date: 2/24/2010 2:10 PM
Subject: Bingham #10-1: CBL Log dated 8/31/76
CC: Mark Bing <MBing@cogc.com>, Susan James <SJames@cogc.com>, John Parker <...

Chris,

This is to inform you that we contacted the Schlumberger Wireline Division in regards to a downhole logging tool that would have the capability to read the integrity of cement behind casing through an interval with two strings of pipe. Unfortunately, the CBL tools have been design for single string casings and are only recommended in single string cased holes.

The Bingham #10-1 has a 4 ½" liner between 7346' – 9806' and thus a second CBL log would only be clear for the desired interval above the 4 ½" liner.

Regards,

Armando Lopez
Production Engineer
Central Region
Citation Oil & Gas Corp.
281.387.0311 (Cell)
281.891.1484 (Office)

I talked to Schlumberger (Jerral) for clarification. They called back after consulting within and said that the USI tool would most likely be unreliable through the total thickness of both casings for a defensible cement bond determination.

CK 2/24/10

From: Bridget Lisenbe <BLisenbe@cogc.com>
To: '"markreinbold@utah.gov"' <markreinbold@utah.gov>
Date: 2/25/2010 8:41 AM
Attachments: Citation Oil-Gas Utah Application.docx

Attached is the write up you requested from Susan James in our Reservoir department. Please look over it and let me know if it will be sufficient.

Thanks,

Bridgette Lisenbe
Permitting Analyst
Citation Oil & Gas Corp.
Phone: (281) 891-1565
Fax: (281) 580-2168

Federal and state regulations require accurate submittal and approval of all permits prior to commencement of work and timely follow-up reports. Failure to comply with the regulations places Citation in jeopardy of receiving civil and criminal penalties. Notices of Violation (NOVs), Incidents of Non-Compliance (INCs), production shut-in, loss of credibility, and/or negative publicity. The Production Dept. appreciates your assistance in providing the requested data.

Citation Oil & Gas Application for SWD into Bingham 1-10

Rule R649-5-2. Requirements for Class II Injection Wells Including Water Disposal, Storage and Enhanced Recovery Wells.

2. UIC Form 1 submitted

2.1 Location plat submitted as separate attachment.

2.2 All electrical, acoustic and radioactive logs are on file with the State of Utah Board of Oil, Gas and Mining.

2.3 Cement bond log is on file with the State of Utah Board of Oil, Gas and Mining.

2.4 Please reference the above logs. If you should require further information, logs can be forwarded to your office.

2.5 The wellbore diagram for the Bingham 1-10 has been submitted as separate attachment.

2.6 The disposal fluid will consist of saltwater produced in the Pineview Field from the Nugget and Twin Creek Formations.

2.7.1 The laboratory analysis of fluid to be injected has been submitted as separate attachment.

2.7.2 The laboratory analysis of the fluid in the Nugget and Twin Creek formations into which the fluid is being injected is the same as 2.7.1 above.

2.7.3 The fluids are compatible because they are the same fluid.

2.8 The proposed average and maximum injection pressure is:

Average - 1100 psi

Maximum – 1400 psi

2.9 Fracture gradient at Pineview is .86 psi/ft (Bingham 2-1A Nugget frac and Bingham 2-3 Nugget acid job). The fracture pressure for the Nugget Formation at a depth of 9659' in the Bingham 1-10 is = 8306.74 psi.

Injection pressure at the Nugget Formation = surface injection pressure+ hydrostatic pressure – friction pressure: = 1400 + (.433) (1.0325) (9659') – 196 = 2722 psi

8306 psi – 2722 psi = 5583.72 psi

The injection pressure of 2722 psi is far below the pressure necessary to fracture the Nugget Formation of 8306 psi. Therefore, the proposed injection pressure will not initiate fractures through the overlying strata that could enable the disposal well to contaminate the very near-surface fresh water source. The

injection pumps are designed with high pressure shutoffs and the wells are monitored to ensure that the maximum pressure is not exceeded.

2.10 Nugget information:

- Top: 9689' MD; Base: 10700 (projected from offset wells). TD 10380' MD
- The Nugget is an aeolian sandstone that was deposited in a broad dune field that extended throughout Utah during Triassic-Jurassic time. Confining beds include the Pruess Salt between 7559 to 8309' MD and the Stump and Preuss formations between 6040 (top Stump) and 7859 (base of Preuss excluding the Preuss salt). The Stump and Pruess formations are composed of interbedded sand and shales.

2.10.1 According to a 1987 Pineview study conducted by the State of Utah, the US Environmental Protection Agency defines potentially usable water sources (underground source of drinking water) as water with less than 10,000 milligrams per liter of total dissolved solids. The Pineview study indicated the base of this interval always occurred within the Kelvin Formation. The depth of the base is also dependent on the topography of the land suggesting recharging existed from the surface. That is, the depth within the Kelvin Formation was shallower where the topography was higher and deeper where the surface topography was lower. The Kelvin however has produced hydrocarbons at Pineview and is therefore not a source of potable water.

In the Pineview area, it appears that most of the fresh water comes from the Quaternary alluvium or Tertiary sandstones and siltstones according to driller's logs and personal communication from local residents. Water wells in the area are drilled from 46 to 500 feet. Casing has been set to a depth of 1500' in the Bingham 1-10 to effectively cover and protect all potential near surface water sources and springs. It is not known to what lateral extent the alluvium sand and conglomerates are deposited.

2.10.3 The Bingham 1-10 location is identified on the Nugget Structure map submitted as a separate attachment.

2.11 The mechanical condition of all wellbores within a ½ mile radius is illustrated in wellbore diagrams submitted as separate attachments. These wellbores have been checked to assure that no conduit exists that could enable fluids to migrate up or down the wellbore and enter into improper intervals.

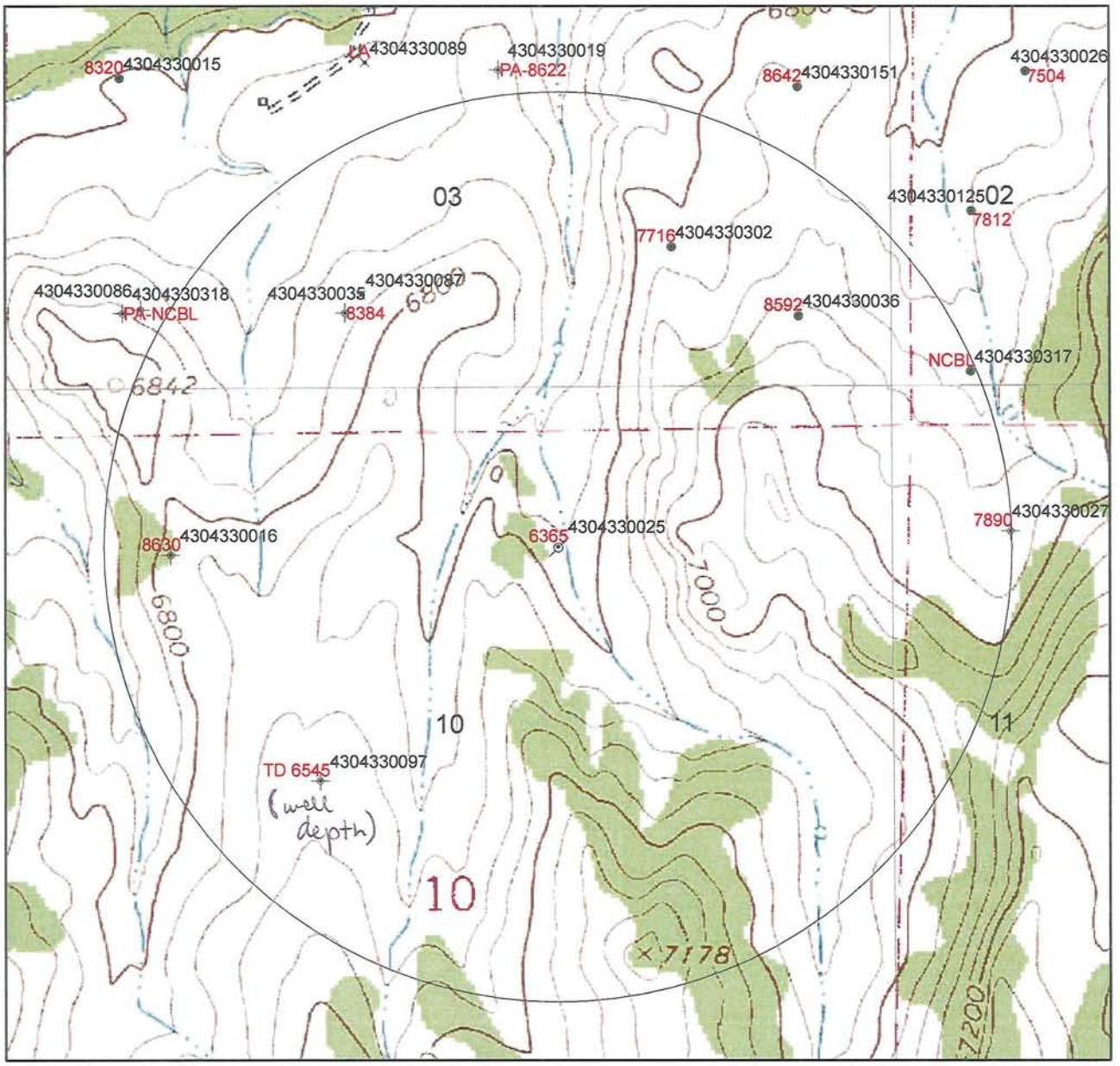

Area of Review

BINGHAM 10-1

API #43-043-30025

UIC-360

Approximate tops of suitable cement bond

0 0.28 Miles

N

1870calc = approx cement top calculated from well completion report

Legend

- Buffer_of_SGID93_ENERGY_DNROilGasWells_32
- Wells-CbltopsMaster10_28_10
- Wells-CbltopsMaster9_23_10
- SGID93.BOUNDARIES.Counties
- GAS INJECTION
- TW
- TA
- OPS
- GS
- APD
- PA
- LA
- GAS STORAGE
- LOCATION ABANDONED
- NEW LOCATION
- PLUGGED & ABANDONED
- PRODUCING GAS
- PRODUCING OIL
- SHUT-IN GAS
- SHUT-IN OIL
- TEMP. ABANDONED
- TEST WELL
- WATER INJECTION
- WATER SUPPLY
- WATER DISPOSAL
- DRILLING
- RETURNED GAS
- RETURNED OIL
- GAS INJECTION SI
- WATER DISP. SUSP.
- WATER INJ. SUSP.
- Sections
- SGID93.ENERGY.DNROilGasWells_HDPath

ScannedMaps\USGSTopographic_24K

RGB

- Red: Band_1
- Green: Band_2
- Blue: Band_3

4304330088
4304330028
4304330295
4304330120
4304330128
4304330031
4304330029
4304330038
4304330091
4304330090
04
03
02
4304330015
4304330089
4304330019
4304330151
4304330026
4304330125
4304330302
4304330318
4304330035
4304330087
4304330086
4304330036
4304330033
4304330317
T2N R7E
4304330027
4304330016
4304330025
4304330097
09
10
11
16
15
14

Search all of Utah.gov »

Utah Division of Water Rights

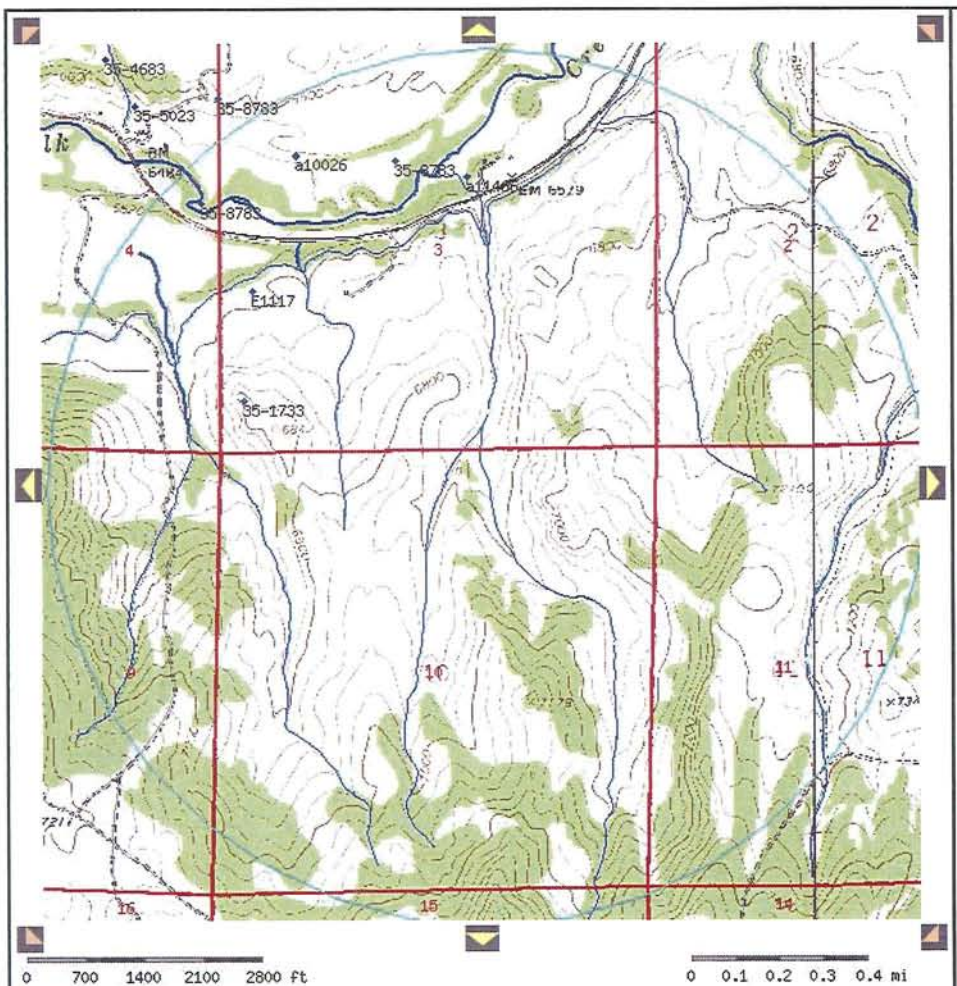

Zoom In Mode | Map Tools

Display	Layer Name
☐	Book Boundary
☐	Counties
☐	Water Quality
☐	County Parcels (As Available)
☐	County Parcel Labels
☑	Public Land Survey System
☑	Rivers and Streams
☑	Roads
☐	Water Right Areas

Topographic Maps | **Base Map**

Legend

- Location
- Search Boundary
- Townships
- Sections
- Primary Route
- Secondary
- Rural Roads
- Minor Roads
- Stream
- Ditch or Canal
- Wash or Ephemeral Drain
- Intermittent Stream
- Aqueduct

Search all of Utah.gov »

Utah Division of Water Rights

Output Listing

Version: 2009.05.06.00 Rundate: 11/08/2010 11:44 AM

Radius search of 5280 feet from a point S682 E3279 from the NW corner, section 10, Township 2N, Range 7E, SL b&m Criteria:wrtypes=W,C,E podtypes=S,U,D,Sp,P,R,T status=U,A,P usetypes=all

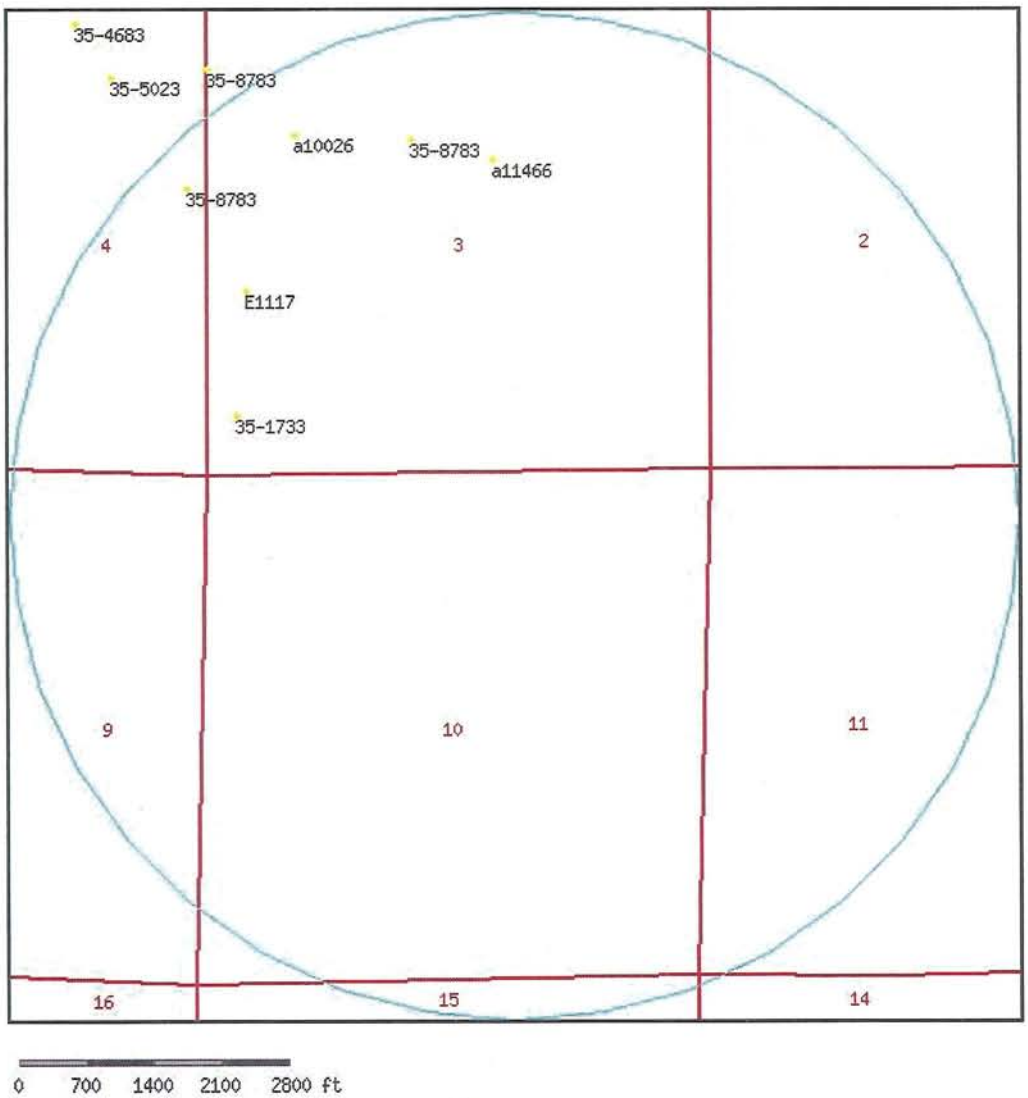

Water Rights

WR Number	Diversion Type/Location	Well Log	Status	Priority	Uses	CFS	ACFT	Owner Name
35-11190	Surface		P	1883	I	0.004	1.000	ALC-01 LLC
	S2510 W135 NE 04 2N 7E SL							PO BOX 682440
35-11190	Surface		P	1883	I	0.004	1.000	ALC-01 LLC

	S1255 E75 NE 04 2N 7E SL							PO BOX 682440
35-11190	Surface		P	1883	I	0.004	1.000	ALC-01 LLC
	S2000 E2200 NW 03 2N 7E SL							PO BOX 682440
35-11191	Surface		P	1883	I	0.004	1.000	ALC-01 LLC
	S2510 W135 NE 04 2N 7E SL							PO BOX 682440
35-11191	Surface		P	1883	I	0.004	1.000	ALC-01 LLC
	S1255 E75 NE 04 2N 7E SL							PO BOX 682440
35-11191	Surface		P	1883	I	0.004	1.000	ALC-01 LLC
	S2000 E2200 NW 03 2N 7E SL							PO BOX 682440
35-11192	Surface		P	1883	I	0.004	1.000	ALC-01 LLC
	S2510 W135 NE 04 2N 7E SL							PO BOX 682440
35-11192	Surface		P	1883	I	0.004	1.000	ALC-01 LLC
	S1255 E75 NE 04 2N 7E SL							PO BOX 682440
35-11192	Surface		P	1883	I	0.004	1.000	ALC-01 LLC
	S2000 E2200 NW 03 2N 7E SL							PO BOX 682440
35-1733	Surface		P	18890000	D	0.002	0.000	RICHARD LYNN CLARK
	N371 E371 SW 03 2N 7E SL							BOX 141
35-4683	Surface		P	19350000	D	0.013	0.000	LONNIE ROY JACOBSON
	S780 W1290 NE 04 2N 7E SL							ROUTE #2
35-4805	Underground		P	19160000	DIS	0.015	0.000	DWAIN BOWMAN
	N650 E1000 W4 03 2N 7E SL							C/O MARGARET BOWMAN
35-5023	Surface		P	1900	D	0.015	0.000	EUGENE & EDNA NEWTON
	S1335 E1685 N4 04 2N 7E SL							2735 DOWNS WAY
35-8783	Surface		P	1883	IS	5.900	414.900	WRIGHT BROS.
	S2510 W135 NE 04 2N 7E SL							UT
35-8783	Surface		P	1883	IS	5.900	414.900	BANNER AND DEMING DITCH COMPANY
	S1255 E75 NE 04 2N 7E SL							C/O WAYNE A. JONES
35-8783	Surface		P	1883	IS	5.900	414.900	ED. POWELL
	S2000 E2200 NW 03 2N 7E SL							UT
a10026	Underground		A	19780118	DIS	0.015	5.120	DWAIN BOWMAN
	N660 E1000 W4 03 2N 7E SL							C/O MARGARET BOWMAN
a11466	Underground		U	19800929	D	0.000	0.730	RICHARD LYNN CLARK
	S2215 E450 N4 03 2N 7E SL							BOX 141
E1117	Underground	well info	A	19770629	O	0.000	4.000	CHAMPLIN PETROLEUM COMPANY

N1677 E472 SW 03 2N
7E SL

P.O. BOX 700

From: Susan James <SJames@cogc.com>
To: "markreinbold@utah.gov" <markreinbold@utah.gov>
CC: Armando Lopez-Rocha <ALopez-Rocha@cogc.com>, Bridget Lisenbe <BLisenbe@c...
Date: 2/25/2010 8:46 AM
Subject: Pineview Water Report
Attachments: Geology of Kamas-CoalvilleRegion, Summit Co., Utah and relation to ground-water conditions.pdf

Good Morning Mark,

Attached is a 2002 Utah Geologic Survey report on 'The Geology of the Kamas-Coalville Region, Summit County, Utah, and Its Relation to Ground-Water Conditions'. Pineview is located due east of Coalville along Chalk Creek before the point where East Fork joins Chalk Creek (figure 1). This report gives a nice overview of the geology of the area and mentions the principal aquifers in the region including the shallow unconsolidated deposits that is the source of drinking water along Chalk Creek. The deeper Pennsylvanian Weber Sandstone and Mississippian Humbug and Madison Formations are also aquifers in the area however, we do not penetrate these horizons at Pineview.

I have also sent a link to a Google Satellite map of the area (note link below). On the satellite map you can see Citation's Pineview facility in relationship to the confluence of the East Fork and Chalk Creek streams.

Armando and I have compiled the information that you requested in the format of code R649-5. Bridget Lisenbe will send this to you shortly.

I will be out of the office next Monday and Tuesday. If you have additional questions, please contact Armando (281 891-1484) or Bridget (281 891-1565) during that time.
Regards,
Susan

Susan James
Geology Manager
Citation Oil and Gas Corp.
14077 Cutten Road
Houston, TX 77069
sjames@cogc.com
281-891-1326

To: Susan James
Subject: sjames@cogc.com sent this to you using Google Maps: A Google Maps link
Link:
<http://maps.google.com/?ie=UTF8&ll=40.941722,-111.132975&spn=0.044995,0.077934&t=h&z=14>

This email was sent to you by a user on Google Maps (maps.google.com)

H.A. Hurlow

Geology of Kamas-Coalville Region

UGS WRB29

THE GEOLOGY OF THE KAMAS-COALVILLE REGION, SUMMIT COUNTY, UTAH, AND ITS RELATION TO GROUND-WATER CONDITIONS

by

Hugh A. Hurlow
Utah Geological Survey

View to the northeast of northern Kamas Valley, from the West Hills.

WATER RESOURCE BULLETIN 29
Utah Geological Survey
a division of
2002 Utah Department of Natural Resources

UTAH GEOLOGICAL SURVEY

THE GEOLOGY OF THE KAMAS-COALVILLE REGION, SUMMIT COUNTY, UTAH, AND ITS RELATION TO GROUND-WATER CONDITIONS

by

Hugh A. Hurlow
Utah Geological Survey

ISBN 1-55791-656-X

WATER RESOURCE BULLETIN 29
UTAH GEOLOGICAL SURVEY
a division of
Utah Department of Natural Resources
2002

STATE OF UTAH
Michael O. Leavitt, Governor

DEPARTMENT OF NATURAL RESOURCES
Kathleen Clarke, Executive Director

UTAH GEOLOGICAL SURVEY
Richard G. Allis, Director

UGS Board

Member	Representing
Robert Robison (Chairman)	Minerals (Industrial)
Geoffrey Bedell	Minerals (Metals)
Stephen Church	Minerals (Oil and Gas)
E.H. Deedee O'Brien	Public-at-Large
Craig Nelson	Engineering Geology
Charles Semborski	Minerals (Coal)
Ronald Bruhn	Scientific
Stephen Boyden, Trust Lands Administration	*Ex officio member*

UTAH GEOLOGICAL SURVEY

The **UTAH GEOLOGICAL SURVEY** is organized into five geologic programs with Administration and Editorial providing necessary support to the programs. The **ENERGY & MINERAL RESOURCES PROGRAM** undertakes studies to identify coal, geothermal, uranium, hydrocarbon, and industrial and metallic resources; initiates detailed studies of these resources including mining district and field studies; develops computerized resource data bases, to answer state, federal, and industry requests for information; and encourages the prudent development of Utah's geologic resources. The **GEOLOGIC HAZARDS PROGRAM** responds to requests from local and state governmental entities for engineering-geologic investigations; and identifies, documents, and interprets Utah's geologic hazards. The **GEOLOGIC MAPPING PROGRAM** maps the bedrock and surficial geology of the state at a regional scale by county and at a more detailed scale by quadrangle. The **GEOLOGIC INFORMATION & OUTREACH PROGRAM** answers inquiries from the public and provides information about Utah's geology in a non-technical format. The **ENVIRONMENTAL SCIENCES PROGRAM** maintains and publishes records of Utah's fossil resources, provides paleontological and archeological recovery services to state and local governments, conducts studies of environmental change to aid resource management, and evaluates the quantity and quality of Utah's ground-water resources.

The UGS Library is open to the public and contains many reference works on Utah geology and many unpublished documents on aspects of Utah geology by UGS staff and others. The UGS has several computer databases with information on mineral and energy resources, geologic hazards, stratigraphic sections, and bibliographic references. Most files may be viewed by using the UGS Library. The UGS also manages the Utah Core Research Center which contains core, cuttings, and soil samples from mineral and petroleum drill holes and engineering geology investigations. Samples may be viewed at the Utah Core Research Center or requested as a loan for outside study.

The UGS publishes the results of its investigations in the form of maps, reports, and compilations of data that are accessible to the public. For information on UGS publications, contact the Natural Resources Map/Bookstore, 1594 W. North Temple, Salt Lake City, Utah 84116, (801) 537-3320 or 1-888-UTAH MAP. E-mail: nrugs.geostore@state.ut.us and visit our web site at mapstore.utah.gov.

UGS Editorial Staff

J. Stringfellow	Editor
Vicky Clarke, Sharon Hamre	Graphic Artists
Patricia H. Speranza, James W. Parker, Lori Douglas	Cartographers

The Utah Department of Natural Resources receives federal aid and prohibits discrimination on the basis of race, color, sex, age, national origin, or disability. For information or complaints regarding discrimination, contact Executive Director, Utah Department of Natural Resources, 1594 West North Temple #3710, Box 145610, Salt Lake City, UT 84116-5610 or Equal Employment Opportunity Commission, 1801 L Street, NW, Washington DC 20507.

TAKE Pride IN UTAH

Printed on recycled paper

12/01

TABLE OF CONTENTS

ABSTRACT 1
INTRODUCTION 1
GEOLOGIC SETTING 4
Geologic Evolution 4
Stratigraphy 6
Proterozoic Rocks 6
Paleozoic Rocks 6
Mesozoic Rocks 8
Tertiary Rocks 8
Quaternary Sediments 8
HYDROLOGIC SETTING 8
Introduction 8
Climate and Precipitation 8
Surface Water 8
Weber River and Tributaries 8
Provo River and Tributaries 8
Ground Water 8
GEOLOGY OF UNCONSOLIDATED DEPOSITS 9
Description and Stratigraphy 9
Distribution and Subsurface Geometry of Unconsolidated Deposits in Kamas Valley 9
Surface Relations 9
Subsurface Relations 11
Gravity study 11
Basin thickness and subsurface facies distribution 14
STRUCTURAL GEOLOGY OF BEDROCK 15
Introduction 15
Cordilleran Thrust Belt Structures 15
Rocky Mountain Foreland Structures 15
Tertiary Normal Faults 16
Structure of Kamas Valley 16
Quaternary and Tertiary Units 16
Pre-Tertiary Units 18
Fractures 18
Introduction 18
Joints 18
Western Uinta Mountains 18
West Hills 19
Rockport Reservoir and Weber River northeast of Kamas Valley 19
Echo Reservoir and Chalk Creek 19
Faults 20
IMPLICATIONS FOR GROUND-WATER CONDITIONS 21
Introduction 21
Hydrogeology of Unconsolidated Deposits 21
Hydrogeology of Fractured Rock 22
Introduction 22
Effects of Fractures on Ground-Water Flow 22
Joints 22
Faults 22
Proposed Hydrostratigraphy 23
Kamas Valley and adjacent mountains 23
Echo Reservoir to Chalk Creek 26
Structural Compartmentalization 27
Potential Well Targets 27
CONCLUSIONS 30
ACKNOWLEDGMENTS 30
REFERENCES 32
GLOSSARY 35

TABLES

Table 1. Hydraulic conductivity estimates for unconsolidated sediments 22
Table 2. Summary descriptions of structural compartments 29
Table A.1. Oil wells shown on plates 1, 3, and 4 and figures 1 and 7 38
Table A.2. Water wells shown on plates 1, 3, 4, and 5, and figures 1 and 7 40
Table A.3. Water wells used to construct contours on plate 4 41
Table B.1. Gravity data for Kamas Valley 45
Table C.1. Fracture data 46

ILLUSTRATIONS

Figure 1. Selected geographic and hydrologic features of the Kamas-Coalville region 2
Figure 2. Geologic time scale 3
Figure 3. Illustration of structural ground-water compartments 4
Figure 4. Tectonic setting of Kamas-Coalville region 5
Figure 5. Schematic cross section of Mesozoic-early Cenozoic compressional orogen of northeastern Utah 6
Figure 6. Stratigraphic column for Kamas-Coalville region 7
Figure 7. Simplified geologic map of Kamas-Coalville region 10
Figure 8. Bouguer gravity map for Kamas Valley 12
Figure 9. Model cross sections of gravity data 13
Figure 10. Schematic cross sections of Quaternary units below Kamas Valley 14
Figure 11. Exposed strand of East Kamas Valley fault zone 17
Figure 12. Joints in Keetley Volcanics 20
Figure 13. Proposed hydrostratigraphy for Kamas-Coalville region 24
Figure 14. Hydrostratigraphic map of Kamas-Coalville region 25
Figure 15. Dissolution features in the Madison Limestone 26
Figure 16. Structural compartments in the Kamas-Coalville region 28

APPENDICES

APPENDIX A Wells shown on plates 1, 3, 4, and 5 and figures 1, 7, and 14 38
APPENDIX B Gravity survey 43
Methods 43
Results 43
Inversion Models 43
Geologic Interpretation 44
APPENDIX C Fracture data - methods, interpretation, and data table 46
APPENDIX D Descriptions of stratigraphic ground-water compartments 49
Keetley SGWC 49
Wasatch-Evanston Heterogeneous SGWC 49
Adaville-Hilliard Heterogeneous SGWC 50
Echo-Upper Frontier Heterogeneous SGWC 50
Oyster Ridge SGWC 50
Lower Frontier Heterogeneous SGWC 51
Kelvin-Preuss Heterogeneous SGWC 51
Twin Creek Limestone SGWCs 51
Nugget SGWC 52
Gartra SGWC 53
Thaynes SGWC 53
Upper Park City SGWC 53
Weber SGWC 53
Morgan-Round Valley Heterogeneous SGWC 54
Humbug-Uinta SGWC 54

PLATES

Plate 1. Compiled geologic map of the Kamas-Coalville region, Summit County, Utah ..... in pocket
Plate 2. Correlations and descriptions of map units, and sources of plate 1 ..... in pocket
Plate 3. Cross sections ..... in pocket
Plate 4. Schematic isopach map showing the thickness of unconsolidated deposits below Kamas Valley, Summit County, Utah
Plate 5. Structure-contour maps of selected stratigraphic ground-water compartments, Kamas Valley and western Uinta Mountains, Summit County, Utah ..... in pocket
Plate 5A. Top of Watton Canyon SGWC ..... in pocket
Plate 5B. Base of Watton Canyon SGWC ..... in pocket
Plate 5C. Top of Nugget SGWC ..... in pocket
Plate 5D. Base of Nugget SGWC ..... in pocket
Plate 5E. Top of Thaynes SGWC ..... in pocket
Plate 5F. Base of Thaynes SGWC ..... in pocket
Plate 5G. Top of Weber SGWC ..... in pocket
Plate 5H. Base of Weber SGWC ..... in pocket
Plate 5I. Top of Humbug-Uinta SGWC ..... in pocket
Plate 6. Orientations and normalized lengths of joints in selected formations, Kamas Coalville region, Summit County, Utah ..... in pocket

THE GEOLOGY OF THE KAMAS-COALVILLE REGION, SUMMIT COUNTY, UTAH, AND ITS RELATION TO GROUND-WATER CONDITIONS

by
Hugh A. Hurlow

ABSTRACT

The Kamas-Coalville region is in the Middle Rocky Mountains physiographic province, about 30 miles (48 km) east of the Wasatch Front urban area. Rapid population growth and increased water use are the impetus for a collaborative study of water resources in the Kamas-Coalville region, which includes geologic (this study) and hydrologic components. This study describes the geologic framework of the Kamas-Coalville region, emphasizing geologic features that most strongly influence ground-water occurrence, flow, and development. The main topics include: (1) the stratigraphy and structural geology of bedrock, (2) the nature and geometry of unconsolidated deposits in Kamas Valley, (3) the hydrostratigraphy of the study area, and (4) the structure of bedrock units below Kamas Valley.

Kamas Valley is a depositional basin bounded on its east and west margins by normal faults. New gravity data, while not definitive, suggest that this basin is asymmetric, thickening to the east, and that the combined thickness of Tertiary Keetley Volcanics plus younger sediments locally exceeds 3,500 feet (1,067 m) adjacent to the East Kamas Valley fault zone, which forms the eastern structural boundary of the basin.

Quaternary deposits in the northern half of Kamas Valley are chiefly alluvium, glacial outwash, and alluvial-fan deposits. Alluvial fans emanate from the western Uinta Mountains, grading into alluvium in the central and western parts of the basin. Alluvial fans are absent in the southern half of the valley, which is dominated by Pleistocene outwash.

The hydraulic conductivity of unconsolidated deposits in Kamas Valley likely varies with age and depositional environment. Deposits formed during and immediately after glacial episodes have relatively high clay content, possibly resulting in lower hydraulic conductivities compared to similar deposits formed during interglacial periods. Alluvial-fan deposits are more homogeneous and likely have lower average hydraulic conductivities, due to poorer sorting, than alluvium. Based on these relations, the average hydraulic conductivity in unconsolidated deposits in Kamas Valley likely decreases with depth due to increased clay content and compaction, and increases from east to west as the relative proportion of alluvium to alluvial-fan deposits increases.

The hydrogeologic properties of bedrock units in the study area depend strongly on lithology and fracture characteristics, attributes that vary significantly among the different stratigraphic units. The stratigraphic column can be divided into stratigraphic ground-water compartments (SGWCs) and low-permeability units. SGWCs are composed of formations, groups of formations, or individual members within formations. Heterogeneous SGWCs consist of complexly layered rock sequences whose individual beds have variable thickness, lateral extent, and hydraulic conductivity. SGWCs and clustered sandstone beds in heterogeneous SGWCs should be the primary targets for future water wells.

Regionally continuous fault zones may partition the Kamas-Coalville region into large-scale structural ground-water compartments. Compartment boundaries are internally complex and likely restrict transverse flow of ground water due to severing of SGWCs and the presence of fine-grained, impermeable fault rock along the fault plane.

INTRODUCTION

This report describes the geologic framework of the Kamas-Coalville region in Summit County, Utah (figure 1), emphasizing the characteristics of bedrock and unconsolidated deposits that most strongly influence the occurrence and movement of ground water. The Kamas-Coalville region is about 30 miles (48 km) east-northeast of Salt Lake City, and consists of relatively small intermontane valleys, including Kamas Valley and valleys associated with the Weber and Provo Rivers (figure 1), and adjacent mountains of moderate relief. Intermontane valleys, where most development and ground-water withdrawal occur, are underlain by unconsolidated sediments of limited extent and thickness. The hydrogeologic properties of bedrock and the interaction between ground water in bedrock and valley fill are, therefore, important to understanding the hydrogeology of such areas.

The Kamas-Coalville region is experiencing rapid residential and industrial development and related increases in use and development of ground water. According to data from the Utah Division of Water Rights, use of ground water by municipal and industrial entities increased by 107% between 1980 and 1997, including a 400% increase in withdrawal of water from wells and a 76% increase in use of spring water (Utah Division of Water Rights, 1982, and unpublished data). Most new municipal wells are completed in bedrock. In response to this growth, the Division of Water Rights initiated a multidisciplinary, cooperative study to better understand the hydrogeology of the Kamas-Coalville region, with emphasis on Kamas Valley and the Coalville-Chalk Creek area (figure 1). This study provides information on the physical character, stratigraphy, and subsurface structure of bedrock and unconsolidated aquifers in the study area. A companion study by the Water Resources Division of

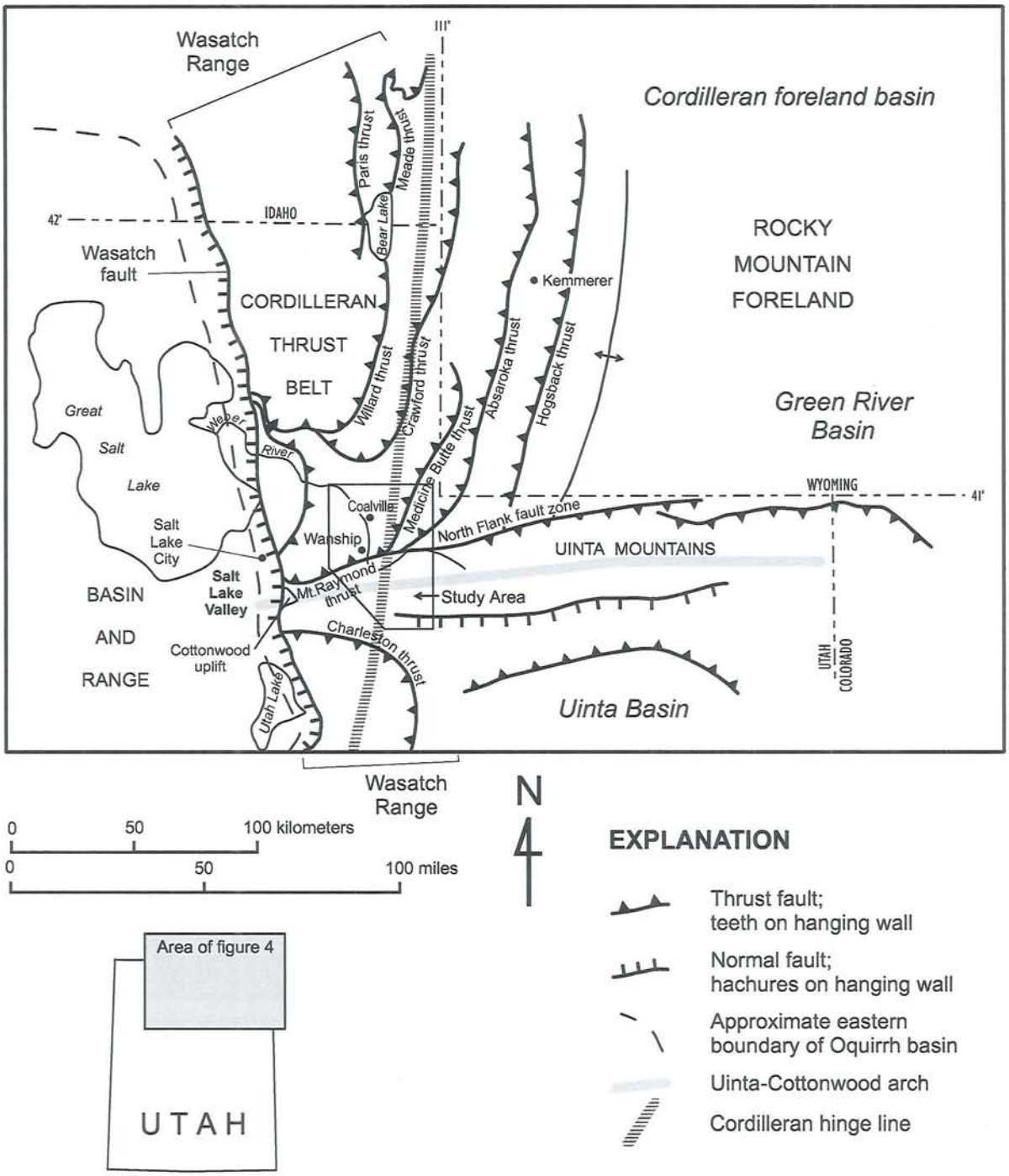

Figure 4. *Tectonic setting of Kamas-Coalville region. Modified from Bryant and Nichols (1988).*

northeast Utah, including the Pineview and Lodgepole fields in the study area (plate 1; Lamerson, 1982; Chidsey, 1999). The organic-rich Cretaceous Aspen Shale and Mississippian limestone units in the footwall of the Absaroka thrust system are the primary source rocks, and the main reservoir rocks are folded Jurassic Nugget Sandstone and Twin Creek Limestone (Lamerson, 1982; Chidsey, 1999).

The Rocky Mountain foreland region from Montana to southern New Mexico experienced reverse faulting and related folding from latest Cretaceous to Late Eocene time (about 70 to 37 Ma; Lowell, 1983; Peterson, 1986). The structural style of the Rocky Mountain foreland differed markedly from that of the Cordilleran thrust belt (figure 5). The Cordilleran thrust belt cuts only post-Precambrian rocks and exhibits ramp-flat geometry (figure 5). In contrast, reverse faults of the Rocky Mountain foreland are approximately planar, cut down into Precambrian igneous and metamorphic rocks, and are more widely spaced (Smithson and others, 1979; Peterson, 1986). Initial normal faulting in the Rocky Mountain foreland overlapped with the end of fault-

EON	PERIOD	GEOLOGIC UNIT			MAP SYMBOL (plate 1)	THICKNESS IN FEET (m)	LITHOLOGY
CENOZOIC	Q	Alluvial, glacial, landslide, & colluvial deposits			Q	0-500 (0-152)	
	Tertiary	Keetley Volcanics and related intrusive rocks			Tkf, Tkb, Tkt, Tlp, Tki	0-1,640 (0-500)	
		older conglomerate			Toc	0-984 (0-300)	u
		Bulldog Hollow Mbr. of Fowkes Fm.			Tfb	0-500 (0-152)	u
		Wasatch Formation			Tw, Twc	3,930 (1,200)	u
MESOZOIC	Cretaceous	Hams Fork Member of Evanston Formation			Keh	<2,620 (<800)	u
		Adaville & Hilliard Formations			Kah	4,495? (1,370?)	
		Echo Canyon Conglomerate			Ke	2,620 (800)	
		Henefer Formation			Khe	2,620 (800)	u
		Frontier Formation	upper member		Kfu	2,620-3,600 (800-1,100)	
			Oyster Ridge Sandstone		Kfo	200-330 (60-100)	
			lower member		Kfl	4,495 (1,370)	
		Aspen Shale, Sage Junction Fm.			Ka, Ksj	<525 (<160)	
		Kelvin Fm	upper member	Cokeville & Thomas Fork Fms.	Kk, Kc, Ktf	1,640-4,265 (500-1,300)	
			Parleys Member		Kkp	164 (50)	u
	Jurassic	Morrison Formation			Jm, Jms	260 (80)	
		Stump Formation			Js, Jms	200 (60)	
		Preuss Sandstone			Jp	984 (300)	u
		Twin Creek Limestone	Giraffe Creek Member		Jtgc	82 (25)	
			Leeds Creek Member		Jtl	776 (236)	
			Watton Canyon Mbr		Jtw	220 (67)	
			Boundary Ridge Mbr		Jtb	107 (33)	
			Rich & Sliderock Mbrs		Jtrs	172 (52)	
			Gypsum Spring Mbr		Jtg	22 (7)	u
		Nugget Sandstone			Jn	919-1,250 (280-381)	u
	Triassic	Ankareh Formation	upper member		TRau	361 (110)	
			Gartra Member		TRag	66-98 (20-30)	
			Mahogany Member		TRam	738 (225)	
		Thaynes Limestone			TRt	650-1,175 (148-358)	
		Woodside Formation			TRw	700 (213)	
PALEOZOIC	Permian	Park City Formation			Ppc	775-950 (236-290)	u
	Penn	Weber Sandstone			IPw	1730-2,600 (527-792)	u
		Morgan Formation			IPm	200-500 (61-52)	
		Round Valley Limestone			IPr	170-700 (52-213)	
	Miss	Doughnut Formation			Mdo	175-650 (53-198)	u
		Humbug Formation			Mh	420-1,500 (128-457)	
	Dev	Madison Limestone & Upper Devonian rocks			MDmu	325-1,250 (99-381)	u
	Cam	Tintic Quartzite			Ꞓt	0-328 (0-100)	u
PROTEROZOIC	Middle Proterozoic	Uinta Mtn Group	Red Pine Shale		Yur	2,953 (900)	
			Hades Pass unit		Yuh	5,906 (1,800)	
			Mount Watson unit		Yuw	3,281 (1,000)	

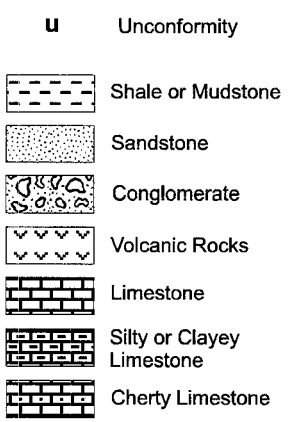

Figure 6. *Stratigraphic column for Kamas-Coalville region, after Imlay (1967) and Bryant (1990). Abbreviations of geologic ages: Q is Quaternary, Penn is Pennsylvanian, Miss is Mississippian, Dev is Devonian, and Cam is Cambrian. The Rich-Sliderock member of the Jurassic Twin Creek Limestone combines the formally designated Rich and Sliderock Members of Imlay (1967). Refer to figure 2 for dates of period boundaries. Map units Tlam and Tlae are not shown because they are volumetrically very minor.*

EON	PERIOD	GEOLOGIC UNIT	MAP SYMBOL (plate 1)	THICKNESS IN FEET (m)	LITHOLOGY (see fig. 6 for symbols)	HYDROSTRATIGRAPHY
CENOZOIC	Quaternary	Alluvial, glacial, landslide, & colluvial deposits	Q	0-500 (0-152)		Unconsolidated deposits
	Tertiary	Keetley Volcanics and related intrusive rocks	Tkf, Tkb, Tkt, Tlp, Tki	0-1,640 (0-500)		Keetley SGWC
		older conglomerate	Toc	0-984 (0-300)		
		Bulldog Hollow Mbr. of Fowkes Fm.	Tfb	0-500 (0-152)		
		Wasatch Formation	Tw, Twc	3,930 (1,200)		
MESOZOIC	Cretaceous	Hams Fork Member of Evanston Formation	Keh	<2,620 (<800)		Wasatch-Evanston heterogeneous SGWC
		Adaville & Hilliard Formations	Kah	4,495? (1,370?)		Adaville-Hilliard heterogeneous SGWC
		Echo Canyon Conglomerate	Ke	2,620 (800)		Echo-upper Frontier heterogeneous SGWC
		Henefer Formation	Khe	2,620 (800)		
		Frontier Formation: upper member	Kfu	2,620-3,600 (800-1,100)		
		Frontier Formation: Oyster Ridge Sandstone	Kfo	200-330 (60-100)		Oyster Ridge SGWC
		Frontier Formation: lower member	Kfl	4,495 (1,370)		lower Frontier heterogeneous SGWC
		Aspen Shale & Sage Junction Fm.	Ka, Ksj	<525 (<160)		
		Kelvin Fm: upper member (Cokeville & Thomas Fork Fms.)	Kk, Kc, Ktf	1,640-4,265 (500-1,300)		Kelvin-Preuss heterogeneous SGWC
		Kelvin Fm: Parleys Member (Cokeville & Thomas Fork Fms.)	Kkp	164 (50)		
	Jurassic	Morrison Formation	Jm, Jms	260 (80)		
		Stump Formation	Js, Jms	200 (60)		
		Preuss Sandstone	Jp	984 (300)		
		Twin Creek Limestone: Giraffe Creek Member	Jtgc	82 (25)		Giraffe Creek SGWC
		Twin Creek Limestone: Leeds Creek Member	Jtl	776 (236)		
		Twin Creek Limestone: Watton Canyon Mbr	Jtw	220 (67)		Watton Canyon SGWC
		Twin Creek Limestone: Boundary Ridge Mbr	Jtb	107 (33)		
		Twin Creek Limestone: Rich & Sliderock Mbrs	Jtrs	172 (52)		Rich-Sliderock SGWC
		Twin Creek Limestone: Gypsum Spring Mbr	Jtg	22 (7)		
		Nugget Sandstone	Jn	919-1,250 (280-381)		Nugget SGWC
	Triassic	Ankareh Formation: upper member	Ꞧau	361 (110)		
		Ankareh Formation: Gartra Member	Ꞧag	66-98 (20-30)		Gartra SGWC
		Ankareh Formation: Mahogany Member	Ꞧam	738 (225)		
		Thaynes Limestone	Ꞧt	650-1,175 (148-358)		upper / lower Thaynes SGWCs
		Woodside Formation	Ꞧw	700 (213)		
PALEOZOIC	Permian	Park City Formation	Ppc	775-950 (236-290)		upper Park City SGWC
	Penn	Weber Sandstone	ℙw	1,730-2,600 (527-792)		Weber SGWC
		Morgan Formation	ℙm	200-500 (61-52)		Morgan-Round Valley heterogeneous SGWC
		Round Valley Limestone	ℙr	170-700 (52-213)		
	Miss	Doughnut Formation	Mdo	175-650 (53-198)		Humbug-Uinta SGWC
		Humbug Formation	Mh	420-1,500 (128-457)		
	Dev	Madison Limestone & Upper Devonian rocks	MDmu	325-1,250 (99-381)		
	Cam	Tintic Quartzite	Ꞓt	0-328 (0-100)		
PROTEROZOIC	Middle Proterozoic	Uinta Mtn Group: Red Pine Shale	Yur	2,953 (900)		
		Uinta Mtn Group: Hades Pass unit	Yuh	5,906 (1,800)		
		Uinta Mtn Group: Mount Watson unit	Yuw	3,281 (1,000)		

Figure 13. Proposed hydrostratigraphy for Kamas-Coalville region. SGWC stands for stratigraphic ground-water compartment; cross-hatched pattern indicates low-permeability unit. Weber through Nugget SGWCs are from Ashland and others (2001). See appendix D for description of each SGWC and figure 14 for map. Volumetrically insignificant map units Tlam and Tlae are not shown.

UIC INJECTION PERMIT ANALYSIS FORM
WELL NAME: Bingham 10-1 SWD, Pineview Field, API # 4304330025

RG49-5-2. Requirements For Class II Injection Wells Including Water Disposal, Storage And Enhanced Recovery Wells.	**Completed Items, Needed Items, & Comments**
1. Injection wells shall be completed, equipped, operated, and maintained in a manner that will prevent pollution and damage to any USDW, or other resources and will confine injected fluids to the interval approved.	**1.** OK)
2. The application for an injection well shall include a properly completed UIC Form 1 and the following:	**2.** OK, received 1/26/2010.
2.1. A plat showing the location of the injection well, all abandoned or active wells within a one-half mile radius of the proposed well, and the surface owner and the operator of any lands or producing leases, respectively, within a one-half mile radius of the proposed injection well.	**2.1.** OK, received 1/26/2010. Surface owner B. A. Bingham & Sons, LLC
2.2. Copies of electrical or radioactive logs, including gamma ray logs, for the proposed well run prior to the installation of casing and indicating resistivity, spontaneous potential, caliper, and porosity.	**2.2.** OK, Resistivity (2494-10,364 & 8105-10,375); Gamma Ray/Neutron (8000-9747 & 7998-9748); Neutron Density/Gamma Ray/Caliper (8200-10,374); Sonic (2414-10,364).
2.3. A copy of a cement bond or comparable log run for the proposed injection well after casing was set and cemented.	**2.3.** An Acoustic Cement Bond Log with Acoustic Signature and Gamma Ray tracks was run (from 5676-10,209) during the original completion of the well. This log has been judged marginally adequate for properly determining the quality of the cement bond. On 2/23/2010 it was requested that Citation consider running a high quality modern cement bond log in the well. However, there are technical problems with running a new log because of a 4 ½ " liner within the 7" casing from 7346 to 9806 feet depth. Consequently, Citation will be required to run a Radioactive Tracer Survey (RATS) to verify adequacy of the cement bond.
2.4. Copies of logs already on file with the division should be referenced but need not be re-filed.	**2.4.** OK.
2.5. A description of the casing or proposed casing program of the injection well and of the proposed method for testing the casing before use of the well.	**2.5.** OK, an acceptable MIT of the casing will be conducted to either maximum injection pressure or 1000 psi whichever is less, prior to final permit approval.
2.6. A statement as to the type of fluid to be used for injection, its source and estimated amounts to be injected daily.	**2.6.** OK, produced water from wells in the Pineview Field producing from the Nugget and Twin Creek ("TC") Formations, which will be treated as necessary and transported by pipeline, at a maximum injection rate of 10,200 bpd.
2.7. Standard laboratory analyses of (1) the fluid to be injected, (2) the fluid in the formation into which the fluid is being injected, and (3) the compatibility of the fluids.	**2.7.** OK, produced water will be initially injected into the upper and middle Nugget Sandstone. Possibly, at a later date, there might be injection into the lower part of the Twin Creek Limestone, provided Citation can establish the integrity of the Bingham 10-2 wellbore. Water samples from nine wells in the Pineview Field have been tested for compatibility. TDS's range from 30,469-38,880 ppm, averaging 34,021 ppm. The TDS value for the proposed SWD well is 38,875 ppm. Specific gravities for the nine sampled wells range from 1.02 –1.06 g/ml, averaging 1.028 g/ml. The specific gravity value for the proposed SWD well is 1.035. The fluids from the wells to be injected appear compatible with the fluid in the proposed injection interval.
2.8. The proposed average and maximum injection pressures.	**2.8.** OK, Citation is requesting an average surface injection pressure of ?? psi and a maximum of 1100 psi. The requested average injection rate is 5000 bpd, and the maximum requested rate is 10,200 bpd.
2.9. Evidence and data to support a finding that the proposed injection well will not initiate fractures through the overlying strata or a confining interval that could enable the injected fluid or formation fluid to enter the fresh water strata.	**2.9.** A step-rate test (SRT) will be performed during recompletion to determine fracture parting pressure of the Nugget Sandstone through proposed injection interval. SRT results will be used to determine final maximum pressure below fracture parting pressure.
2.10. Appropriate geological data on the injection interval and confining beds, and nearby Underground Sources of Drinking Water, including the geologic name, lithologic description, thickness, depth, water quality, and lateral extent; also information relative to geologic structure near the proposed well which may affect the conveyance and/or storage of the injected fluids.	**2.10.** The Nugget Sandstone (upper Triassic-lower Jurassic) consists primarily of fine to coarse-grained windblown dune sand. Based on other wells in the vicinity, it is projected to be about 1000 feet thick in this area, but only about the upper 700 feet are penetrated in the Bingham 10-1 well. Nugget porosity consists of both intergranular and natural fractures. Produced water from the Nugget is generally >30,000 ppm TDS. In the area of the Pineview field the Twin Creek Limestone (middle Jurassic) is generally about 1100-1400 feet thick. It is about 1300 feet thick in the Bingham 10-1 well. The Twin Creek is divided into seven members, consisting of various lithologies, including limestone, argillaceous limestone, siltstone, shale, and evaporites. The requested gross interval to be permitted for injection includes about the lowermost 400 feet of the Twin Creek (Rich, Sliderock, and Gypsum Spring Members), although no injection perforations are proposed in the Gypsum Spring Member, which immediately overlies the Nugget. Porosity in the Twin Creek consists almost entirely of natural fractures. Limited available analyses indicate >25,000 ppm TDS in the Twin Creek. In the area of the Pineview field, moderately saline groundwater (<10,000 ppm TDS) is found at considerable depths. Water analyses in the area show water in the Stump Formation (uppermost Jurassic) at about 2000 ppm TDS at a depth of more than 6000 feet

2.11. A review of the mechanical condition of each well within a one-half mile radius of the proposed injection well to assure that no conduit exists that could enable fluids to migrate up or down the wellbore and enter improper intervals.	**2.11.** Well records indicate casing damage and tubing left in the wellbore of Bingham 10-2, about ½ mile east of Bingham 10-1. Concerns that this might provide a conduit for upward migration of injected water are the basis for limiting injection to the Nugget Sandstone at this time. If Citation can establish mechanical integrity in this well, permission might be granted to inject into the Twin Creek Limestone at a later date. Otherwise, all remaining wells in AOR appear to be in good mechanical condition.
2.12. An affidavit certifying that a copy of the application has been provided to all operators, owners and surface owners within a one-half mile radius of the proposed injection well.	**2.12.** OK, received 2/08/2010, 1/2 mile radius of the Bingham 10-1 well.
2.13. Any other additional information that the board or division may determine is necessary to adequately review the application.	**2.13.** OK

OTHER COMMENTS AND OBSERVATIONS: This document is intended to summarize the Division's evaluation of the completeness of the UIC Permit and supporting documentation, which is provided to the Division by the operator, with the UIC application.

Reviewed by: Mark Reinbold Date: April 6, 2010

Citation Bingham 10-1 43-043-30025

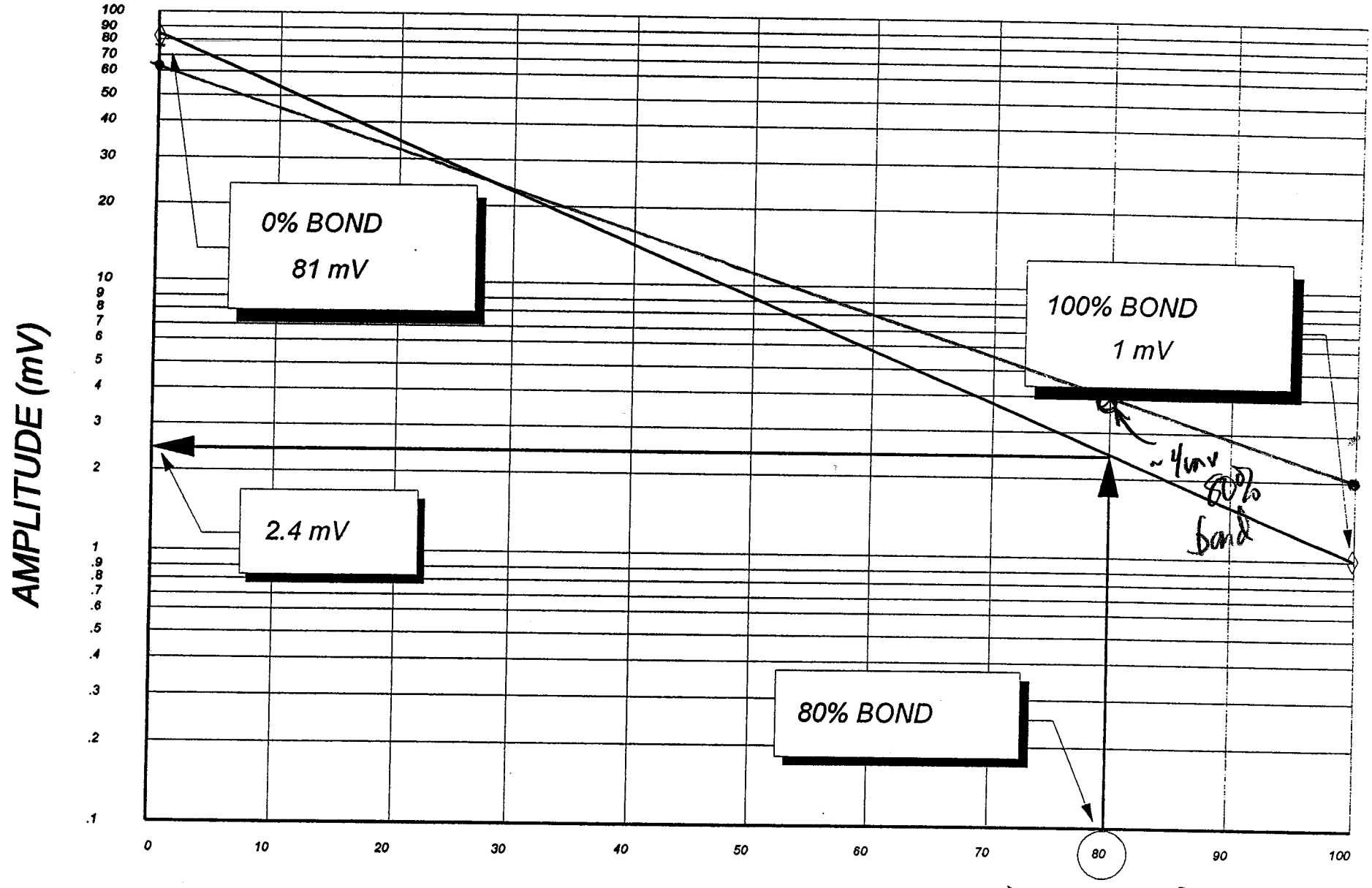

7" production casing

% BOND

100% bond ~ 2mv
0% bond ~ 62mv

80% bond = ~4mv ?

TABLE 2 - TRAVEL TIMES AND AMPLITUDES FOR FREE PIPE
(3 FT RECEIVER)

CASING SIZE (in)	CASING WEIGHT (lb/ft)	TRAVEL TIME (µs)		AMPLITUDE (mV)
		1-11/16" TOOL	3-5/8" TOOL	
4-1/2	9.5	252	233	81
	11.6	250	232	81
	13.5	249	230	81
5	15.0	257	238	76
	18.0	255	236	76
	20.3	253	235	76
5-1/2	15.5	266	248	72
	17.0	265	247	72
	20.0	264	245	72
	23.0	262	243	72
7	23.0	291	271	62
	26.0	289	270	62
	29.0	288	268	62
	32.0	286	267	62
	35.0	284	265	62
	38.0	283	264	62
7-5/8	26.4	301	281	59
	29.7	299	280	59
	33.7	297	278	59
	39.0	295	276	59
9-5/8	40.0	333	313	51
	43.5	332	311	51
	47.0	330	310	51
	53.5	328	309	51
10-3/4	40.5	354	333	48
	45.5	352	332	48
	51.0	350	330	48
	55.5	349	328	48

FCD:March 31, 1994:RCT/RCT/k:\cbl.sop

Printed on Recycled Paper

CITATION OIL AND GAS CORPORATION
WELLBORE DIAGRAM AND INFORMATION
UPDATED WELLBORE DIAGRAM

Well Name:	Bingham 10-1	**Field:**	Pineview
Date:	08/02/10 (AL)	**Location:**	NW/NE Sec. 10, T2N, R7E
County:	Summit	**State:**	Utah

Surface:	**682' FNL & 3279' FWL Sec. 10, T-2-N, R-7-E Summit County, UT**
Completed:	**11/7/76**
Elevation:	**6764' GL**
KB:	**12'**
API #:	**43-043-30025**

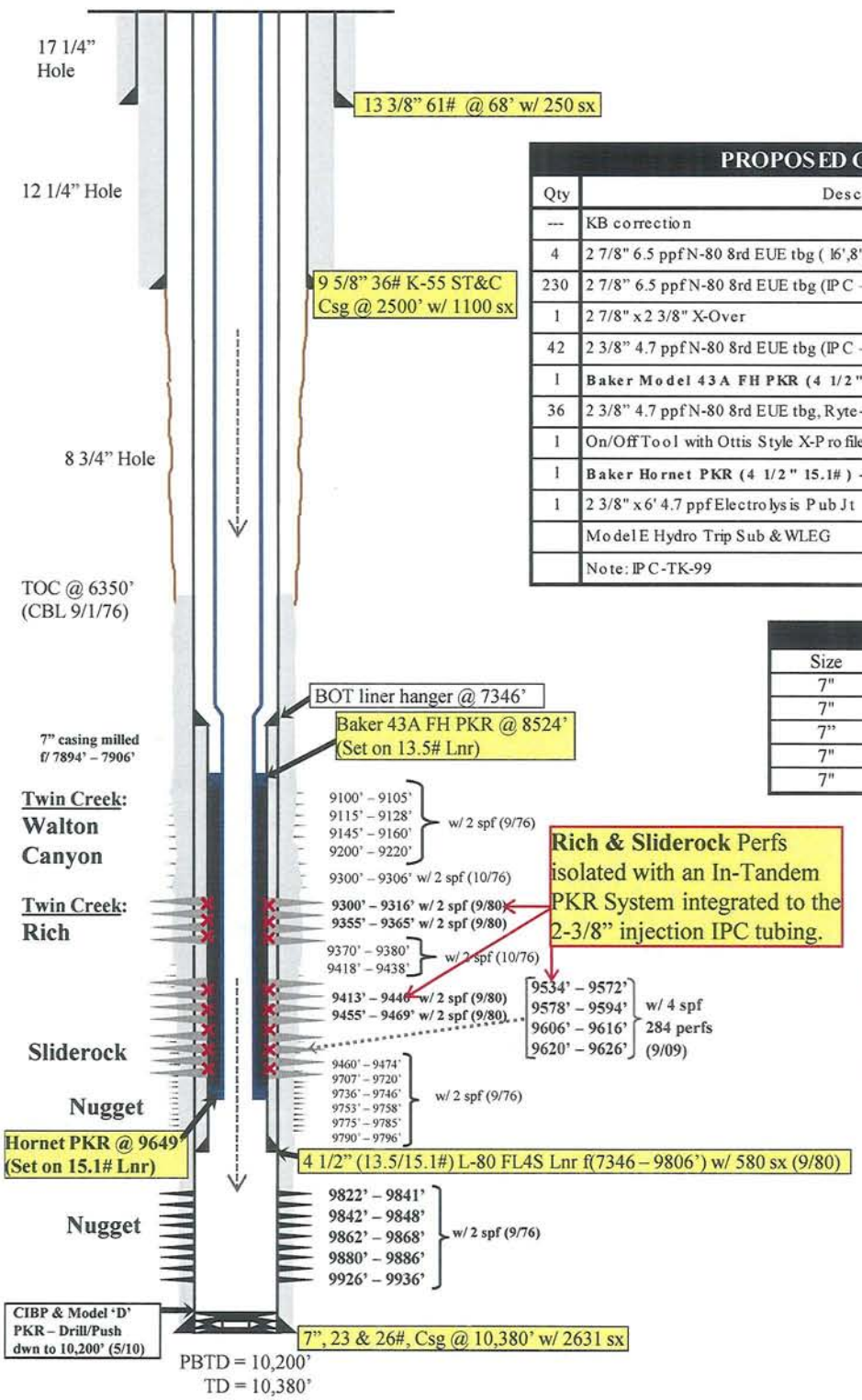

PROPOSED COMPLETION ASSEMBLY

Qty	Description	Length	Depth
---	KB correction	12.00	12.00
4	2 7/8" 6.5 ppf N-80 8rd EUE tbg (16',8',6',2' Electrolysis NP Pub Jts)	27.00	39.00
230	2 7/8" 6.5 ppf N-80 8rd EUE tbg (IPC – ID: 2.312")	7171.64	7210.64
1	2 7/8" x 2 3/8" X-Over	0.67	7211.31
42	2 3/8" 4.7 ppf N-80 8rd EUE tbg (IPC – ID: 1.866")	1306.83	8518.14
1	**Baker Model 43A FH PKR (4 1/2"-13.4#) - Nickel Plated CPE~1.75'**	5.51	**8523.65**
36	2 3/8" 4.7 ppf N-80 8rd EUE tbg, Ryte-Wrap (IPC – ID: 1.866")	1116.71	9640.36
1	On/Off Tool with Ottis Style X-Profile (ID: 1.875")	1.34	9641.70
1	**Baker Hornet PKR (4 1/2" 15.1#) - Nickel Plated CPE~2.25'**	7.05	**9648.75**
1	2 3/8" x 6' 4.7 ppf Electrolysis Pub Jt	6.25	9655.00
	Model E Hydro Trip Sub & WLEG	1.50	9656.50
	Note: IPC-TK-99		

7" CASING DETAIL

Size	Weight	Grade	Depth
7"	26	S-95	Surf – 25
7"	23	N-80	25 – 5701
7"	23	S-95	5701 – 7550
7"	26	S-95	7550 – 8320
7"	23	S-95	8320 – 10380

4 1/2" LINER DETAIL

Size	Weight	ID / Drift ID	Grade	Length
4 ½"	13.5	3.92" / 3.795"	L-80	Top 1314'
4 ½"	15.1	3.826" / 3.701"	L-80	Bottom 1146'

(9/09) Tag'd 4 ½" (15.1#) Lnr top jt @ 8674'

Citation OIL & GAS CORP.

WELLBORE DIAGRAM AND INFORMATION

Well Name: Bingham 10-2
Field: Pineview
Location: 730' FNL , 1028 FWL NWNW
County: Summit
State: Utah

D&C:	
P&A:	12/1989
Elevation:	6842' (GL), 6858' KB
KB:	16'
APR#	43-043-300616

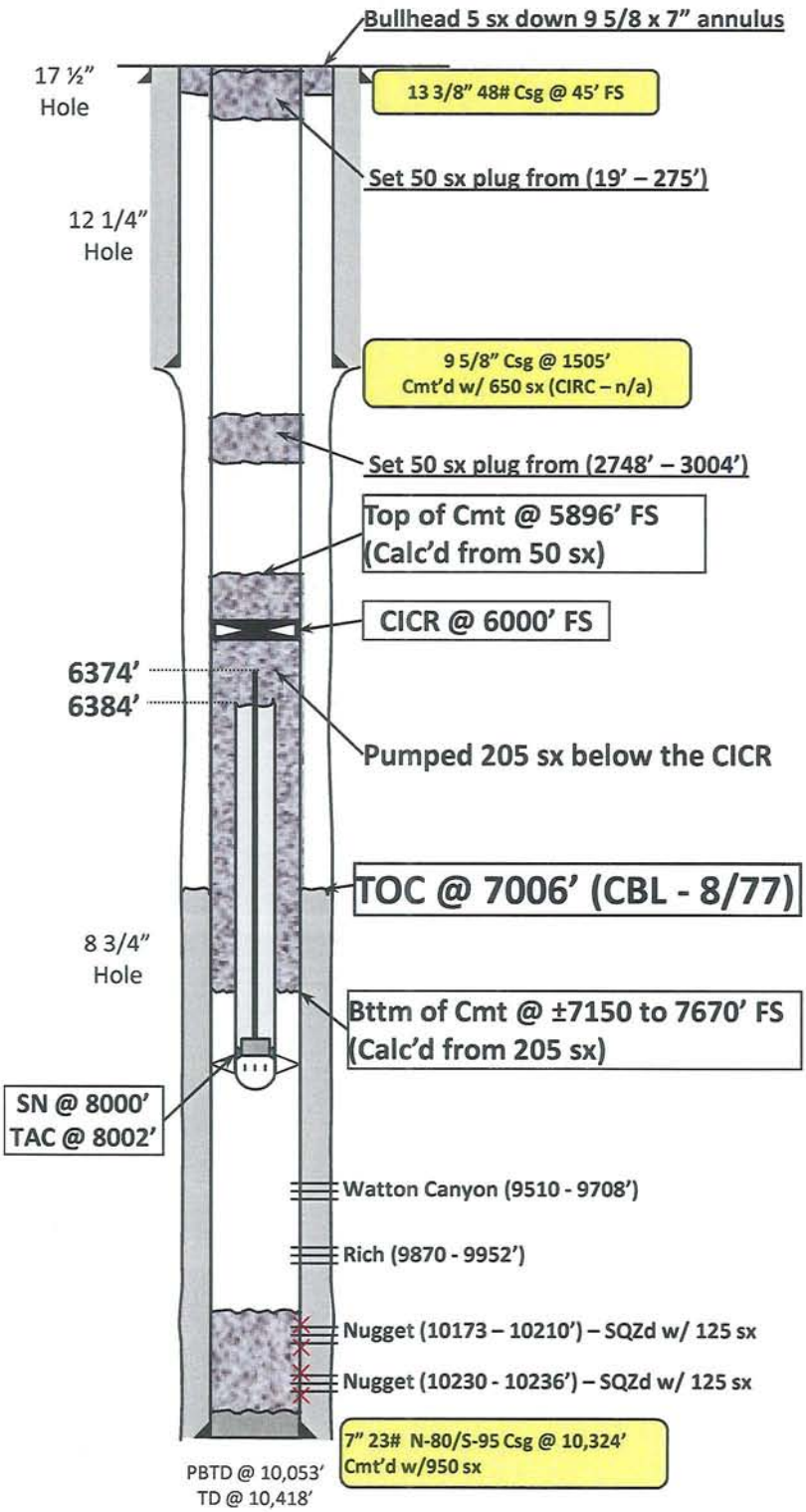

Citation OIL & GAS CORP.

WELLBORE DIAGRAM AND INFORMATION

Well Name: Bingham 10-3
Field: Pineview
Location: SE NW Sec 10 T2N R7E
County: Summit
State: Utah

D&C:	
P&A:	
Elevation:	6900' (GL), 6916' KB
KB:	16'
APR#	43-043-30097

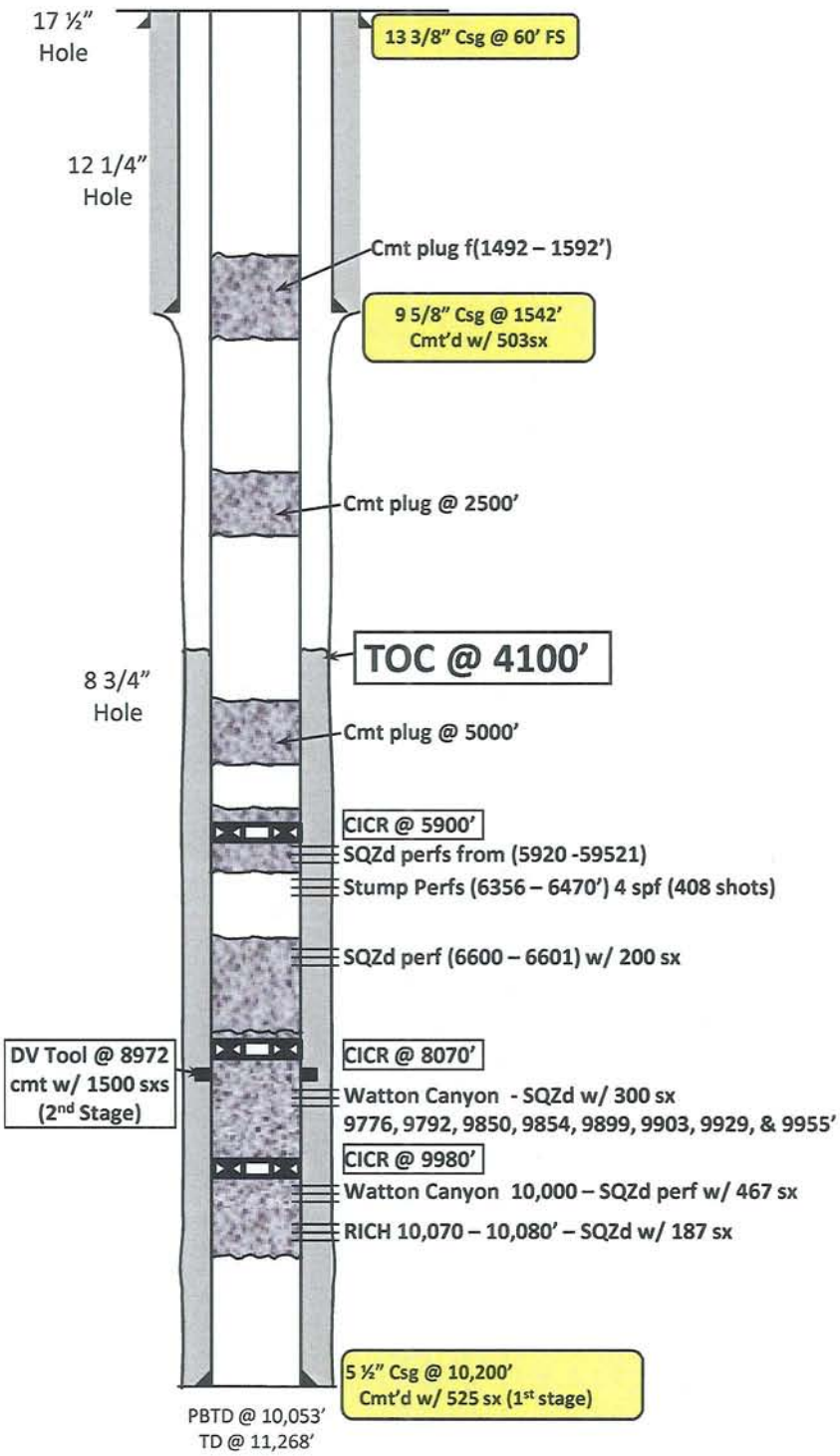

CITATION OIL AND GAS CORPORATION
WELLBORE DIAGRAM AND INFORMATION

Well Name:	Bingham #1-42-3	**Field:**	Pineview
Date:	October 7, 2005	**Location:**	SE NE, Sec. 3, T-2-N, R-7-E
County:	Summit	**State:**	Utah

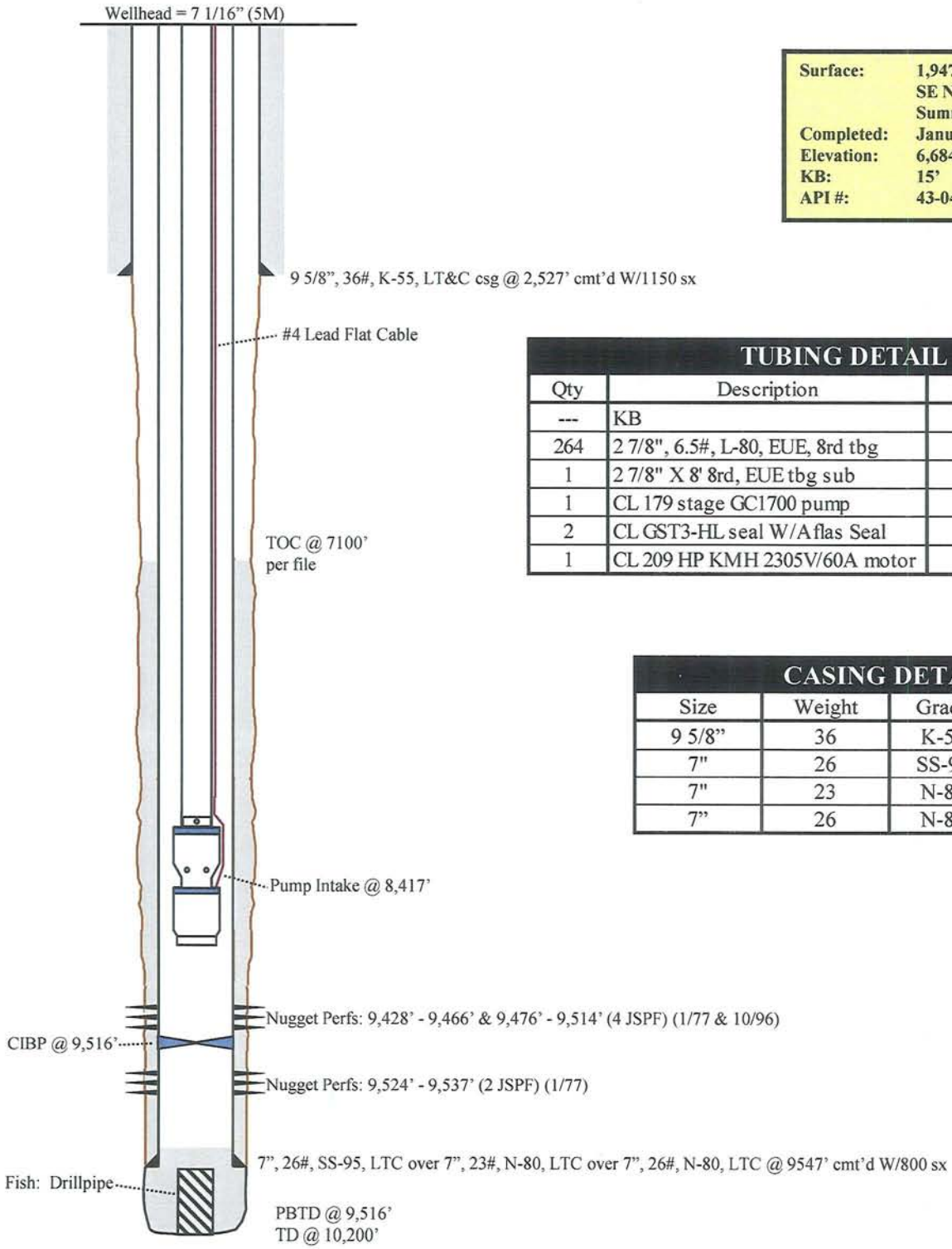

Surface:	**1,947' FNL & 663' FEL**
	SE NE, Sec. 3, T2N, R7E
	Summit County, UT
Completed:	**January 1977**
Elevation:	**6,684'**
KB:	**15'**
API #:	**43-043-30029**

TUBING DETAIL

Qty	Description	Length	Depth
---	KB	15	15.00
264	2 7/8", 6.5#, L-80, EUE, 8rd tbg	8,373.57	8,388.57
1	2 7/8" X 8' 8rd, EUE tbg sub	8.05	8,396.62
1	CL 179 stage GC1700 pump	20.37	8,416.99
2	CL GST3-HL seal W/Aflas Seal	12.63	8,429.62
1	CL 209 HP KMH 2305V/60A motor	20.78	8,450.40

CASING DETAIL

Size	Weight	Grade	Depth
9 5/8"	36	K-55	Surf - 2527
7"	26	SS-95	Surf - 893
7"	23	N-80	893 - 6246
7"	26	N-80	6246 - 9547

CITATION OIL AND GAS CORPORATION
WELLBORE DIAGRAM AND INFORMATION

Well Name: Bingham #2-1A
Date: August 20, 2003

Field: Pineview
Location: SW SW, Section 2, T-2-N, R-7-E

County: Summit

State: Utah

Surface:	**1200' FSL & 350' FWL**
	SW SW, Section 2 , T-2-N, R-7-E
	Summit County, UT
Completed:	**May 1080**
Grd. Elev.:	**6885'**
KB:	**20'**
API #:	**43-043-30317**

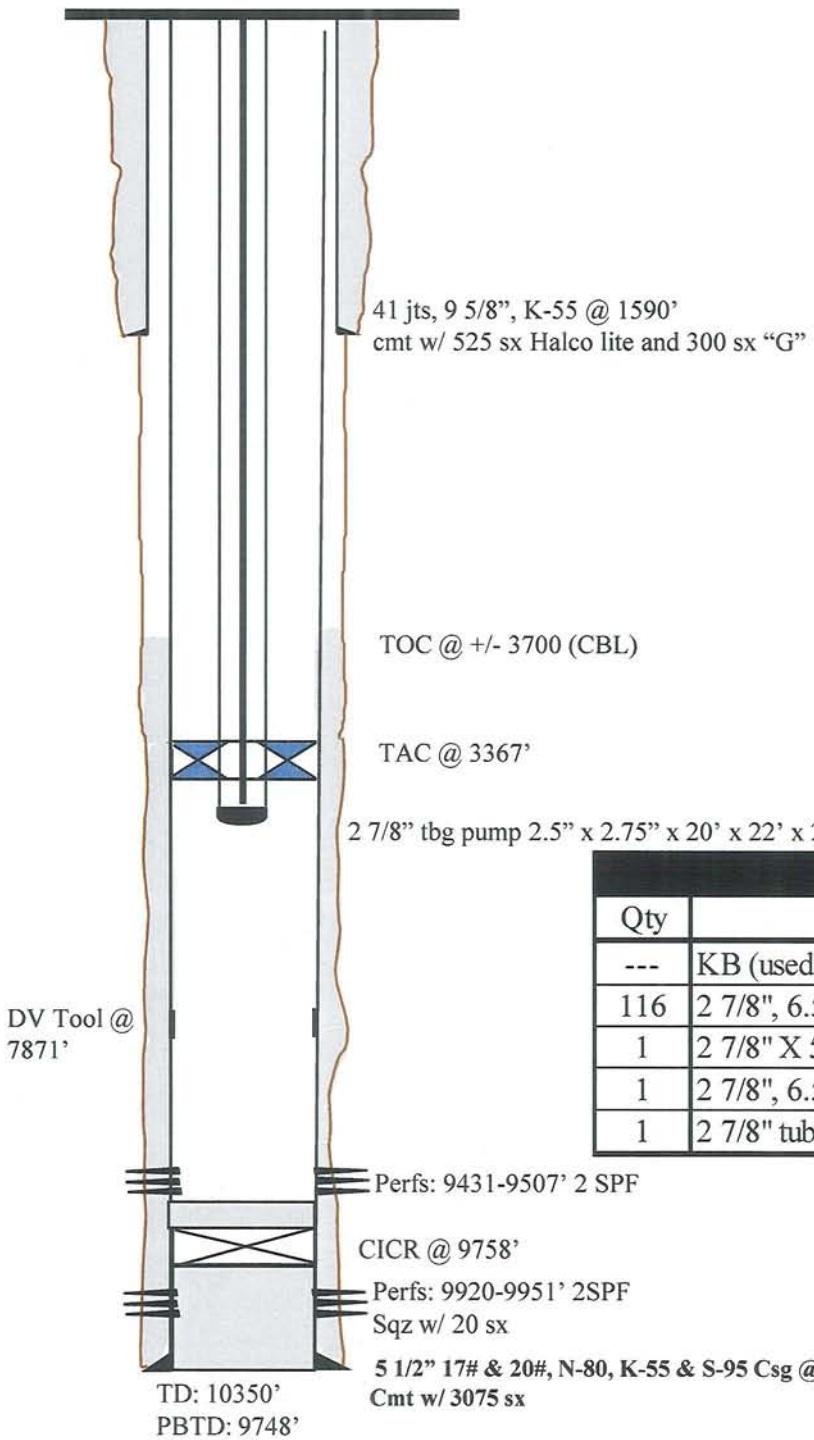

ROD DETAIL

Size	Length	Grade	Depth
1"	1041	D	Surf - 1041
7/8"	1100	D	1041-2141
3/4"	1250	D	2141-3391
1"	100	D	3391-3491
on/off tool			3491

CASING DETAIL

Size	Weight	Grade	Depth
9 5/8	36	K-55	Surf - 1590
5 1/2	17	N-80	Surf - 2654
5 1/2	17	K-55	2654 - 7007
5 1/2	20	S-95	7007 - 8003
5 1/2	17	N-80	8003 - 10350

TUBING DETAIL

Qty	Description	Length	Depth
---	KB (used)	17	17.00
116	2 7/8", 6.5#, L-80, 8rd EUE tb	3,624.61	3,641.61
1	2 7/8" X 5" TAC	2.34	3,643.95
1	2 7/8", 6.5#, N-80, 8rd EUE tb	6.20	3,650.15
1	2 7/8" tubing pump	27.19	3,677.34

Date: 2-12-04

Citation Oil & Gas Corporation
Pineview Bingham #2-2
Wellbore Diagram

Present Status

Ground Elevation = 6670'
RKB = 6686'
KB = 16'

Surface Location

646' FNL & 660' FWL,
NW NW, Sec. 2, T-2-N,
R-7-E, Summit County, UT

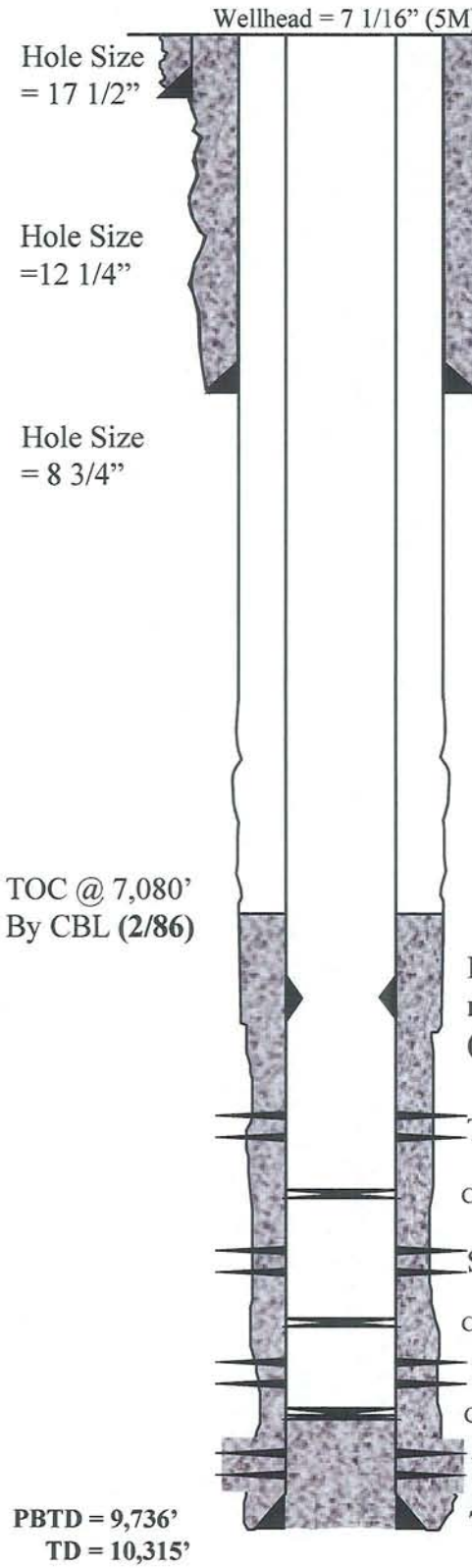

TUBING DETAIL			
Qty	Description	Length	Depth
		16	16.00

ROD & PUMP DETAIL			
Qty	Description	Length	Depth
			0.00

PRODUCTION CASING DETAIL			
Size	Weight	Grade	Depth
7"	23#	N-80	Surf - 4972'
7"	23#	S-95	4972 - 9328'
7"	32#	N-80	9328 - 10315

Date: 5-25-04

Citation Oil & Gas Corporation
Pineview Bingham #2-3
Wellbore Diagram

Present Status

Ground Elevation = 7130'
RKB = 7146'
KB = 16'

Surface Location

561' FSL & 2126' FWL,
SE SW, Sec. 2, T-2-N,
R-7-E, Summit County, UT

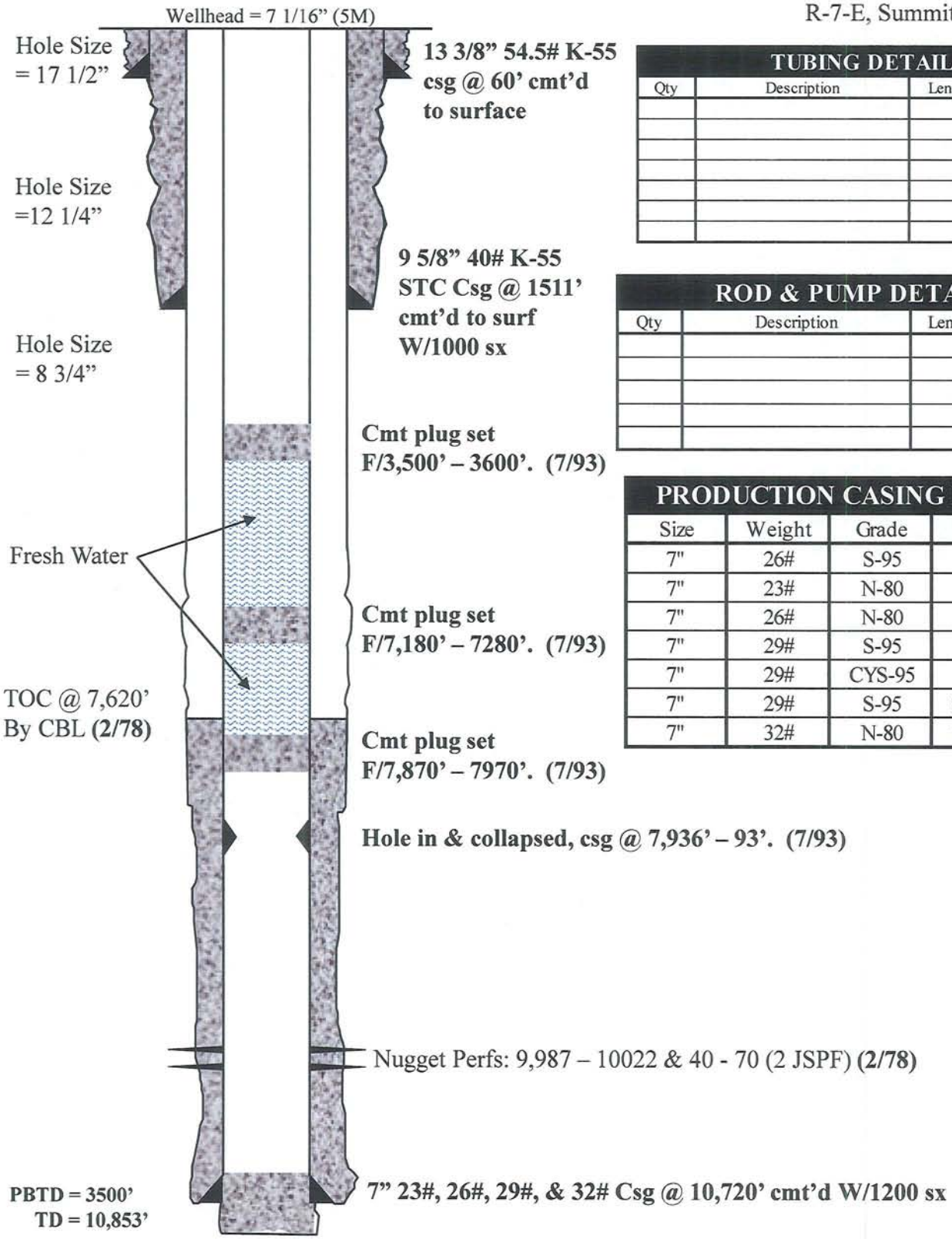

TUBING DETAIL

Qty	Description	Length	Depth
		16	16.00

ROD & PUMP DETAIL

Qty	Description	Length	Depth
			0.00

PRODUCTION CASING DETAIL

Size	Weight	Grade	Depth
7"	26#	S-95	Surf - 1912'
7"	23#	N-80	1912 - 6016'
7"	26#	N-80	6016 - 6363'
7"	29#	S-95	6363 - 7467'
7"	29#	CYS-95	7467 - 8418'
7"	29#	S-95	8418 - 10630'
7"	32#	N-80	10630-10720'

Date: 2-19-04

Citation Oil & Gas Corporation
Pineview Bingham #2-4
Wellbore Diagram

Present Status

Ground Elevation = 6781'
RKB = 6797'
KB = 16'

Surface Location

2084' FNL & 2055' FWL,
SE NW, Sec. 2, T-2-N,
R-7-E, Summit County, UT

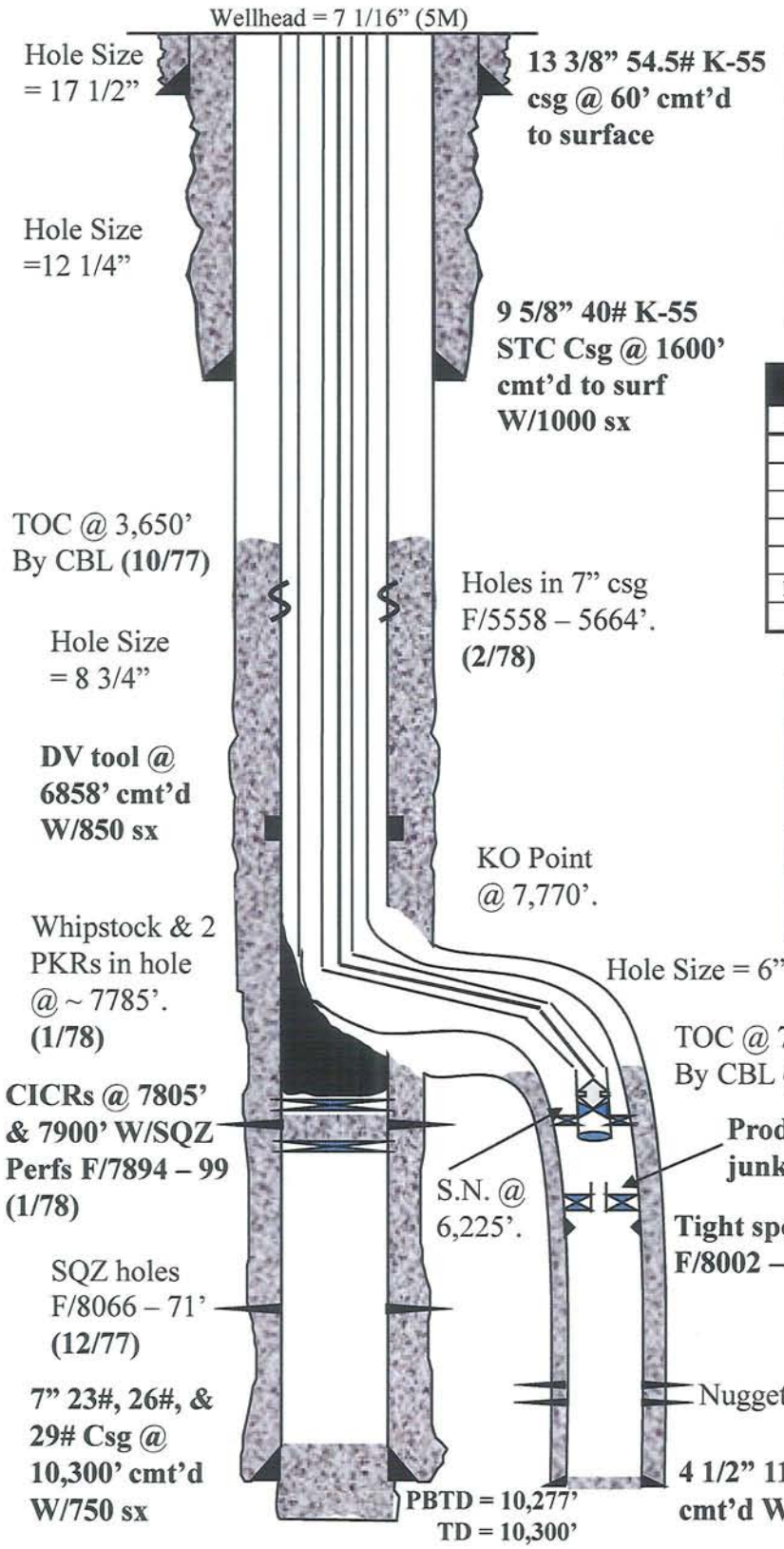

TUBING DETAIL

Qty	Description	Length	Depth
	KB	16	16.00
1	2 7/8" tbg sub	8.06	24.06
193	2 7/8" Atlas Bradford tbg	6,199.54	6,223.60
1	2 7/8" ABS X 2 7/8" 8rd XO	0.76	6,224.36
1	SN	1.10	6,225.46
1	2 7/8" X 2 3/8" XO	0.78	6,226.24
1	4 1/2" X 2 3/8" TAC	3.07	6,229.31
1	2 3/8" perf'd MA	27.85	6,257.16

ROD & PUMP DETAIL

Qty	Description	Length	Depth
53	1" API Grade "D"	1325	1,325.00
65	7/8" API Grade "D"	1625	2,950.00
123	3/4" API Grade "D"	3075	6,025.00
8	1" API Grade "D"	200	6,225.00
Pump	25 X 1.5 X 24' RHBC		

PRODUCTION CASING DETAIL

Size	Weight	Grade	Depth
7"	23#	N-80	Surf - 5434'
7"	29#	N-80	5434 - 5476'
7"	26#	N-80	5476 - 10260'
7"	23#	N-80	10260 - 10300'

Date: 01/28/2010

Citation OIL & GAS CORP.

CURRENT WELLBORE DIAGRAM AND INFORMATION

Well Name: Bingham 2-1
Field: Pineview
Location: 3273' FNL, 666' FWL, NW SW, Sec 2, T-2-N, R-7-E
County: Summit
State: Utah

D&C:	**July - October 1976**
Elevation:	**6810' (GL), 6827' KB**
KB:	**17'**

Production Test: 65 BO + 161 MCF + 725 BWPD (Dec 2009)

Mark II 640-365-144 Mark II Unit
w/ a size 4 Sargent Econo-pak Motor

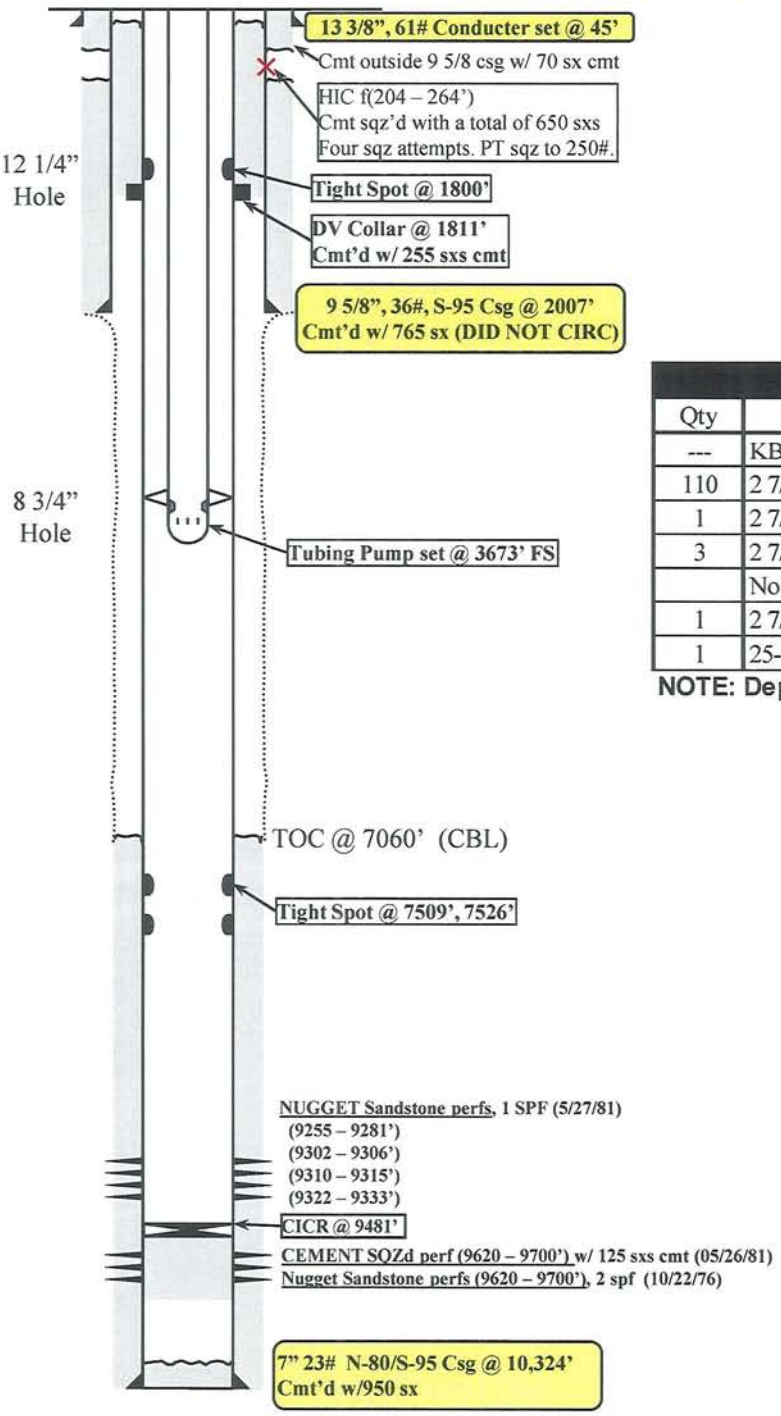

PBTD @ 9,481'(CICR)
PBTD @ 10,295'
TD @ 10,327'

CASING DETAIL

Size	Weight	Grade	Depth
13 3/8"	61#	na	45'
9 5/8"	36	S-95	Surf - 2007'
7"	23	S-95/N-80	Surf - 10324'

TUBING DETAIL

Qty	Description	Length	Depth
---	KB	17	17
110	2 7/8" 6.5# L-80 8rd tbg	3515	3532
1	2 7/8" x 7" TAC w/ Carbide Slips	2.45	3534
3	2 7/8" 6.5# L-80 8rd tbg w/ J55 collars	97	3631
	No relief sub		
1	2 7/8" x 8' sub	8	3639
1	25-275-THEP-20-25 MS 222"	34	3673

NOTE: Depths Approximate

ROD DETAIL

Qty	Size	Type	Length
4	1"	Subs (2', 4', 6', 6')	18
70	1"	Grade D (slick)	1,750
23	7/8"	Grade D (slick)	575
47	3/4"	Grade D (slick)	1,175
4	1"	Grade D (slick & Guided)	100
1		On-Off Tool	0.6
Polish Roc 1 1/2" x 30' Polish Rod			
Pump: Tubing Pump 25-275-THEP-20-25 MS 222"			

7" Production Casing (Top to Bttm)

43 jts 23 ppf, N-80, Buttress	**@ 1811''**
DV Collar	**@ 1813'**
20 jts 23 ppf, N-80, Buttress	**@ 2650'**
70 jts 23 ppf, N-80, LT&C	**@ 5854'**
33 jts 23 ppf, S-95, LT&C	**@ 7315'**
66 jts 23 ppf, S-95, Sandblasted	**@ 10,278'**
Float Collar	**@ 10,281'**
1 jt 23 ppf, S-95, LT&C	**@ 10,321'**
Float Shoe	**@ 10,324'**

Date: 02/09/2010

Citation OIL & GAS CORP.

CURRENT WELLBORE DIAGRAM AND INFORMATION

Well Name: Bingham & Sons #1 – SWD Well
Field: Pineview
Location: 1205' FNL, 888' FWL, Sec 2, T-2-N, R-7-E
County: Summit
State: Utah

D&C:	**August 1990**
Elevation:	**6708' (GR), 6732' KB**
KB:	**24'**
API No:	**43-043-30295**

Current Injection Rate: 10,312 BWIPD @ 1043 psi (Dec 2009)

SWD WELL

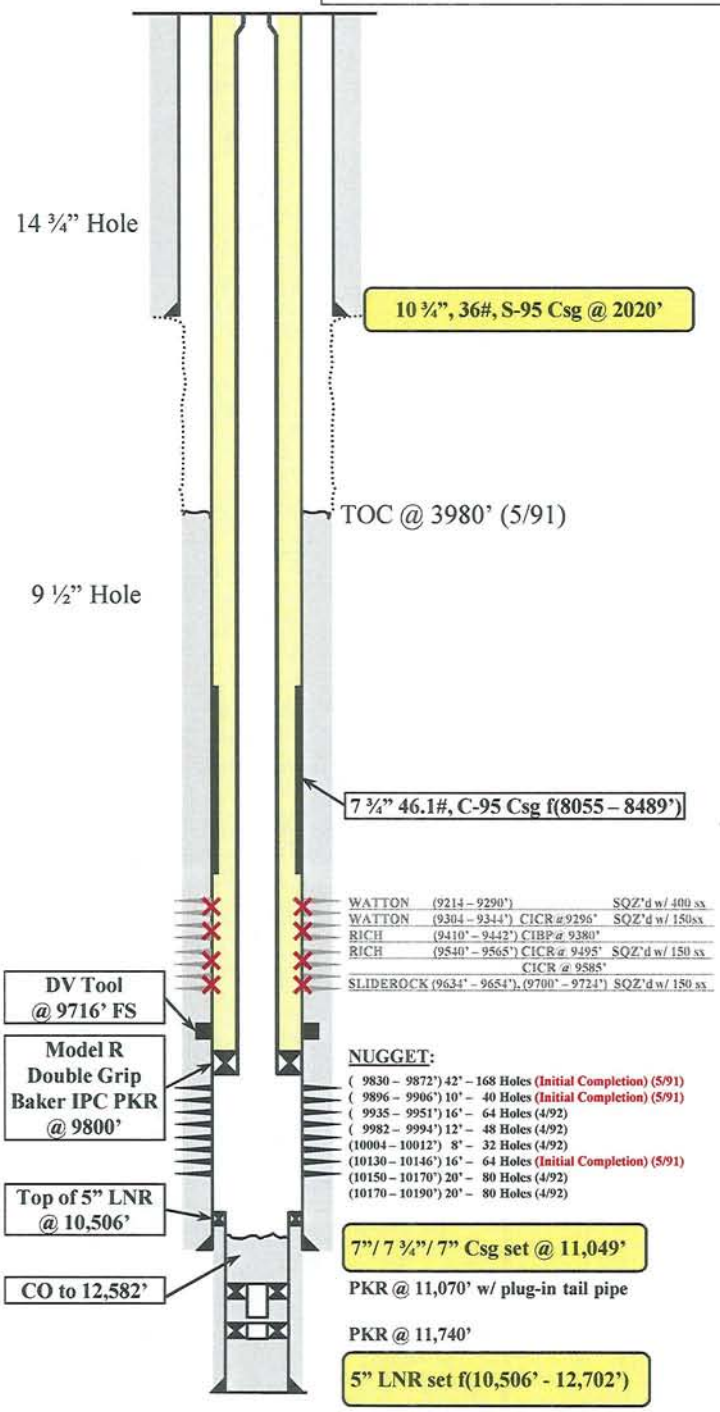

PBTD @ 8900' (*approx)
TD @ 12,697'

CASING DETAIL

Size	Weight	Grade	Depth
10 3/4"	36	S-95	Surf - 2020'
7"	23	S-95/N-80	Surf - 11049'
5" LNR	23.2#	S-95	10,506 - 12,702'

TUBING DETAIL

Qty	Description	Length	Depth
---	KB	17	17
1	2 7/8" 6.5# L-80 IPC (sub)	6	23
1	2 7/8" x 3 1/2" X-Over	1	24
327	3 1/2" 9.3#, N-80, EUE 8rd w/	9766	9790
	MMS Couplings IPC		9790
1	7" x 3 1/2" Model R PKR	10	9800

Intermediate Casing (Top to Bttm)

7", 29#/32#, N-80/L-80, LT&C, Buttress	**0' – 8,055'**
7 ¾", 46.1#, C-95 LT&C	**8,055' – 8,489'**
7", 32#, N80/L80, LT&C	**8,489' – 11,049'**

DV Tool @ 9,716'

Cmt Job: **1st stage – 375 sx Class "G"**
2nd stage – 975 sx 65-35 Poz w/ 6% gel.
Tail w/ 956 sx Class "G"

5" Liner f(10,506 – 12,702')

5", 23.2#, S-95, ABFL-4S	**10,506' – 12,702'**

(Press Tested Liner top to 4000 psi w/ 9.4 ppg mud)

CITATION OIL AND GAS CORPORATION
CURRENT WELLBORE DIAGRAM

Well Name:	Clark 4-1	**Field:**	Pineview
Date:	5/4/2009 JTT	**Location:**	SW/4 Sec. 4, T2N, R7E
County:	Summit	**State:**	Utah

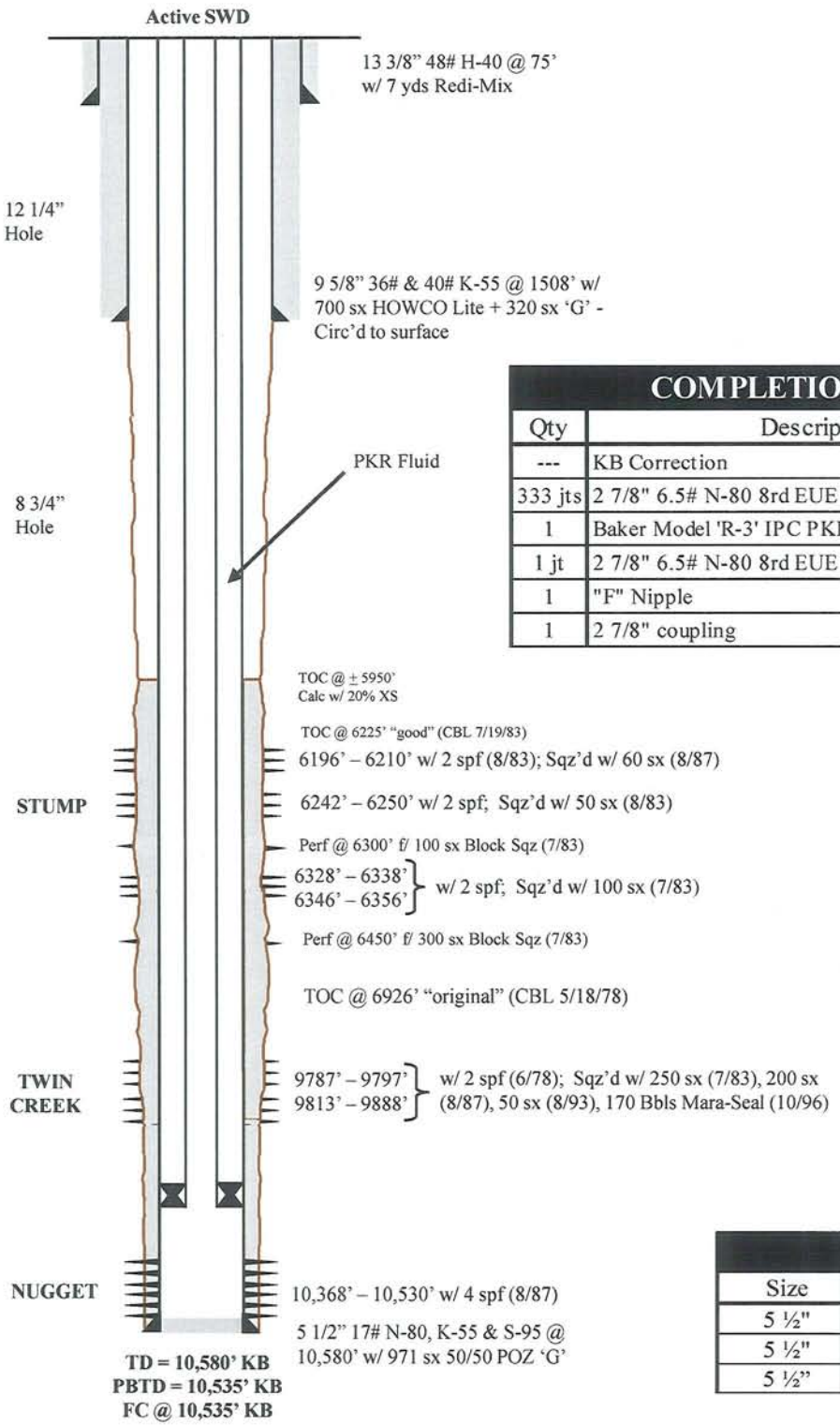

Surface:	**660' FSL & 1980' FWL**
	Sec. 4, T-2-N, R-7-E
	Summit County, UT
Completed:	**6/7/78**
Elevation:	**6619' GL**
KB:	**17'**
API #:	**43-043-30071**

COMPLETION ASSEMBLY (3/18/97)

Qty	Description	Length	Depth
---	KB Correction	12.00	12.00
333 jts	2 7/8" 6.5# N-80 8rd EUE MMS w/ TK-99 IPC	10,247.67	10,259.67
1	Baker Model 'R-3' IPC PKR w/ 22K comp	7.20	10,266.87
1 jt	2 7/8" 6.5# N-80 8rd EUE MMS w/ TK-99 IPC	31.05	10,297.92
1	"F" Nipple	1.04	10,298.96
1	2 7/8" coupling	0.44	10,299.40

CASING DETAIL

Size	Weight	Grade	Depth
5 ½"	17 ppf	N-80	Surf – 1826'
5 ½"	17 ppf	K-55	1826' – 6471'
5 ½"	17 ppf	S-95	6471' – 10580'

Date: 11-4-03

Citation Oil & Gas Corporation
Pineview Field, Pineview #4-3
Wellbore Diagram

Ground Elevation = 6612'
RKB = 6629'
KB = 17'

Present Status

Lufkin C-640-365-144

Surface Location

722' FSL & 663' FEL, SE SE,
Section 4, T-2-N, R-7-E,
Summit County, UT

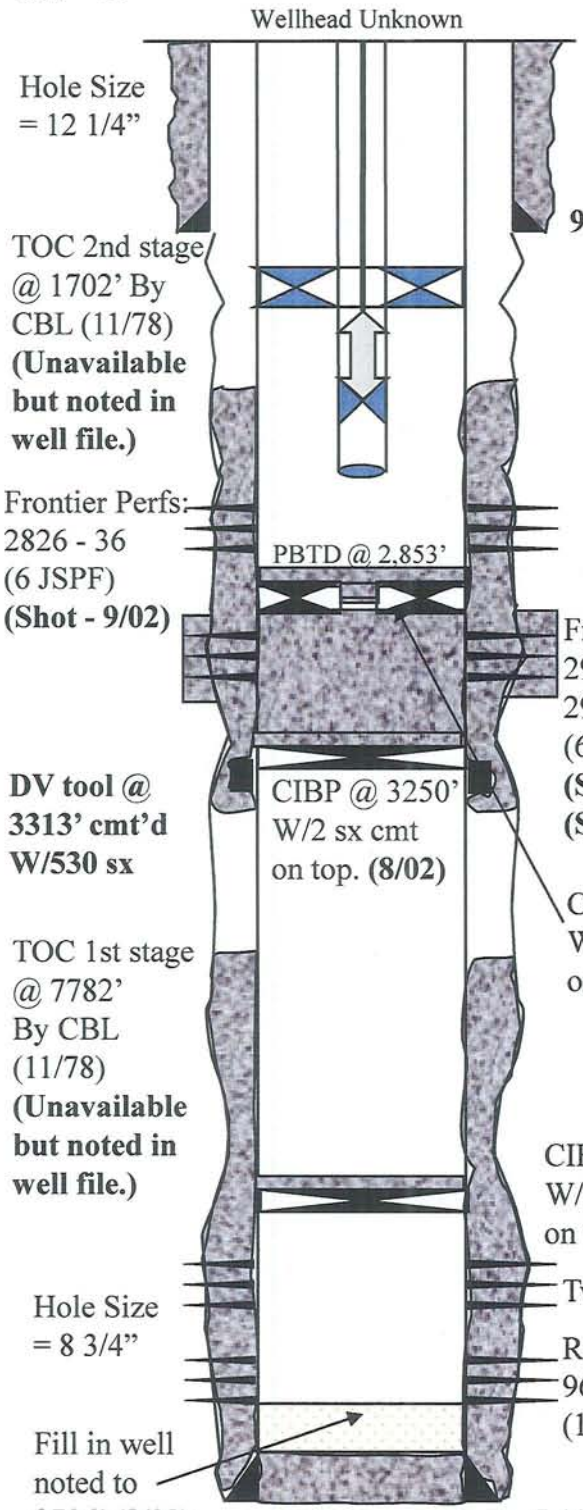

9 5/8" 40.5# K-55 & S-80 Csg @ 1558' cmt'd W/875 sx

Frontier Perfs: 2958 - 76 & 2990 - 3012 (6 JSPF) **(Shot - 8/02) (SQZ'd - 9/02)**

CICR @ 2929' W/2 sx cmt on top. **(9/02)**

CIBP @ 9300' W/6 sx cmt on top. **(8/02)**

Twin Creek Perfs: 9347, 58, 75, 80, 89, 96, 9415, 18, 31, 47, 57, 79, 82, 88, 9507, 09, 21, & 25 (1 JSPF) **(11/78)**

Rich Perfs: 9614 - 52 (1 JSPF) **(7/98)**

5 1/2", 17 - 20#, N-80 : K-55: & S-95 csg @ 9830 cmt'd W/800 sx

TUBING DETAIL

Qty	Description	Length	Depth
---	KB (used)	17	17.00
88	2 7/8" L-80 6.5# 8rd EUE tbg	2,762.10	2,779.10
1	5 1/2" X 2 7/8" TAC	2.80	2,781.90
1	2 7/8" L-80 6.5# 8rd EUE tbg	29.55	2,811.45
1	S.N.	1.10	2,812.55
1	2 7/8" L-80 6.5# 8rd EUE tbg W/B	30.25	2,842.80

ROD DETAIL

Qty	Size	Type	Length
1	1 1/2"	PR	30
109	3/4"	API "D"	2,725
Total Rod Length =			2,755
Pony Rods: 1 - 4', 6', & 8' X 3/4" Total = 18'			
Pump:	2 1/2"-1 1/2"-20' RHBC Bottom Cup Type Hold Down		

CASING DETAIL

Size	Weight (#/ft)	Grade	Depth
9 5/8"	40.5	K-55 & S-80	Surf - 1558
5 1/2"	17	N-80	Surf - 1989
5 1/2"	17	K-55	1989 - 8057
5 1/2"	20	S-95	8057 - 9061
5 1/2"	17	N-80	9061 - 9830

Date: 5-18-04

Citation Oil & Gas Corporation
Pineview #4-4S
Wellbore Diagram

Present Status

Ground Elevation = 6610'
RKB = 6620'
KB = 10'

Surface Location

909' FSL & 824' FEL, SE SE,
Section 4, T-2-N, R-7-E,
Summit County, UT

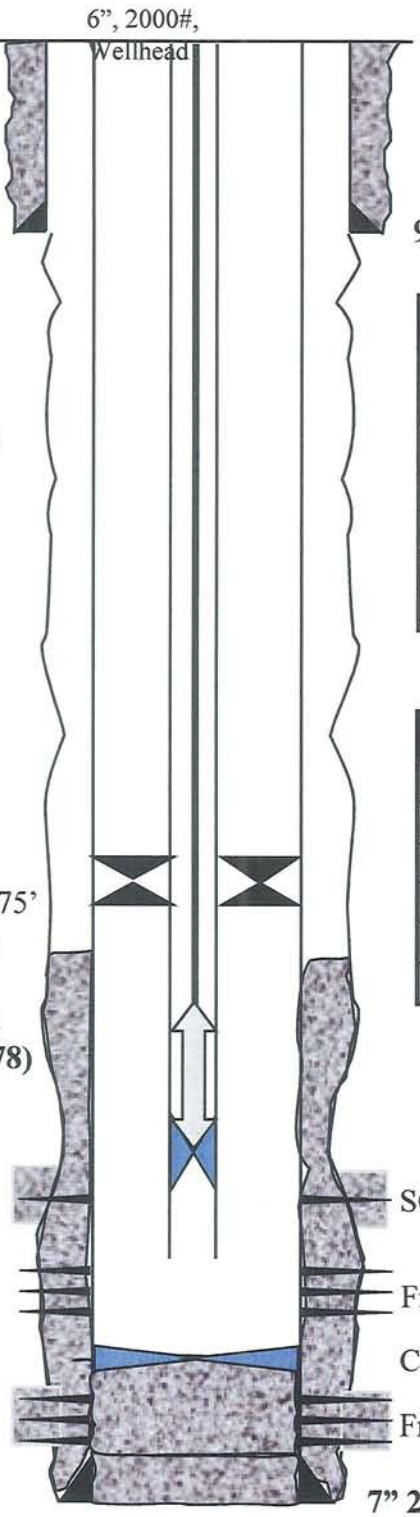

9 5/8" 40# K-55 Csg @ 419' cmt'd W/280 sx

TUBING DETAIL			
Qty	Description	Length	Depth
---	KB (used)	12	12.00
88	2 7/8", N-80, 6.5#, 8rd, EUE tbg	2,704.88	2,716.88
1	7" Baker TAC in 14K tension	2.32	2,719.20
4	2 7/8", N-80, 6.5#, 8rd, EUE tbg	126.74	2,845.94
1	S.N.	1.10	2,847.04
1	2 7/8", N-80, 6.5#, 8rd, EUE MA	31.05	2,878.09

ROD & PUMP DETAIL			
Qty	Description	Length	Depth
1	1 1/2" Polished rod	26	26.00
2	1" X 2' pony rods	4	30.00
107	3/4" API grade "D" rods	2,675.00	2,705.00
4	1" API grade "D" rods	100.00	2,805.00
4	25 - 200 - 24' - RHBC	24.00	2,829.00

SQZ Perfs: 2749 (4 JS) **(Shot & SQZ'd-11/78)**

Frontier Perfs: 2784-2832 & 62-82 (4 JSPF) **(11/78)**

CICR @ 2910' **(11/78)**

Frontier Perfs: 2930-42 & 47-80 (4 JSPF) **(Shot & SQZ'd-11/78)**

7" 23# N-80 & K-55 Csg @ 3156' cmt'd W/200 sx

PBTD = 2910'
TD = 3156'

Citation OIL & GAS CORP.

WELLBORE DIAGRAM AND INFORMATION

Well Name: UPRR #3-5 (P&A'd)
Field: Pineview
Location: 673' FSL & 1969' FWL, T-2-N, R-7-E, Sec 3
County: Summit
State: Utah

D&C:	
P&A:	June 1997 by Union Pacific Resources
Elevation:	6764' (GL), 6781' KB
KB:	17'
APR#	43-043-30035

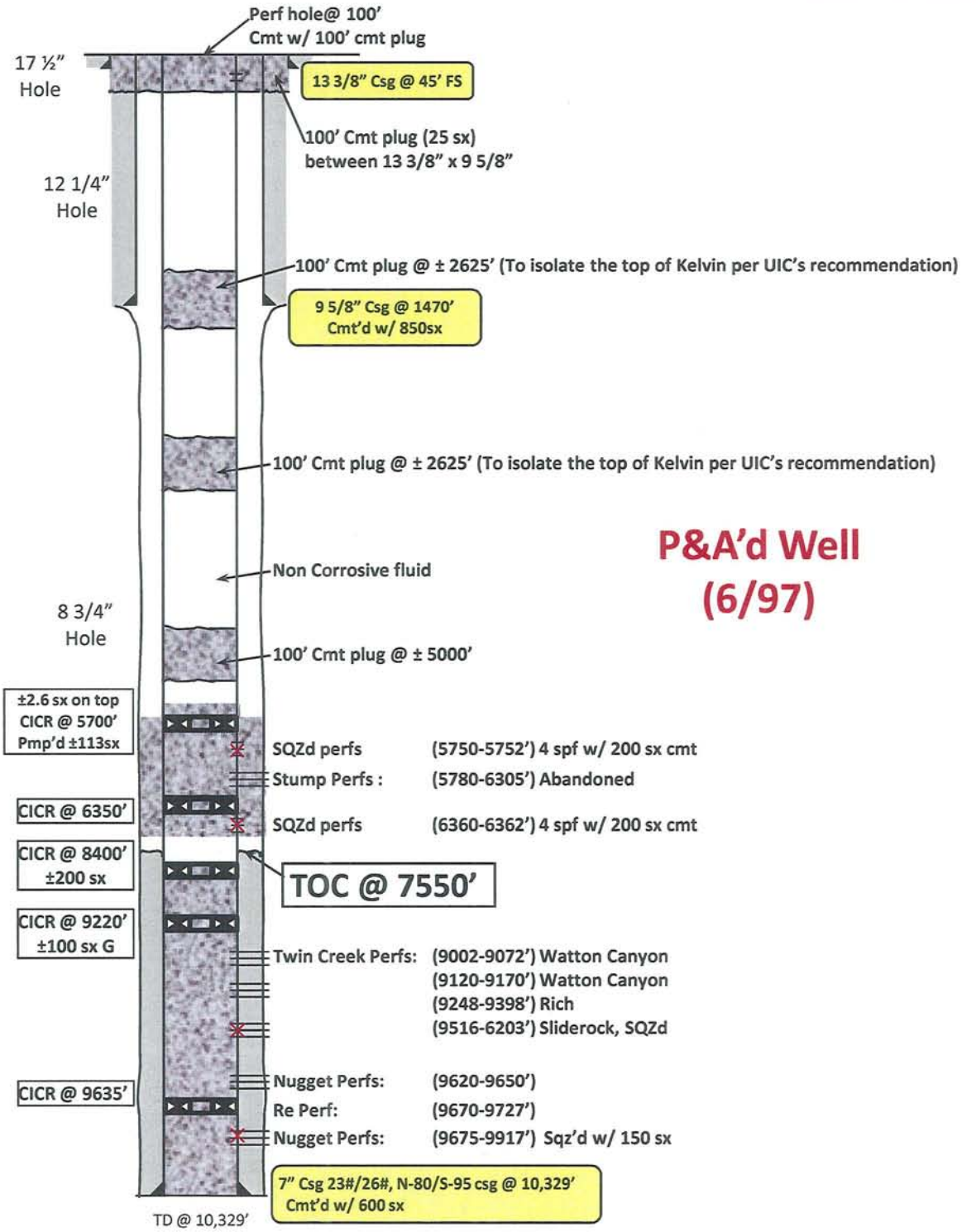

P&A'd Well (6/97)

CITATION OIL AND GAS CORPORATION
WELLBORE DIAGRAM AND INFORMATION

Well Name: UPR #3-11H
Date: January 17, 2002
County: Summit
Field: Pineview
Location: SW SW, Section 3, T-2-N, R-7-E
State: Utah

Surface:	**669' FSL & 678' FWL**
	SW SW, Section 3 , T-2-N, R-7-E
	Summit County, UT
BHL:	**3346' FSL & 1499' FWL**
	SE NW, Section 3, T-2-N, R-7-E
Completed:	**October, 1997**
Grd. Elev.:	**6769'**
KB:	**20'**
API #:	**43-043-30318**

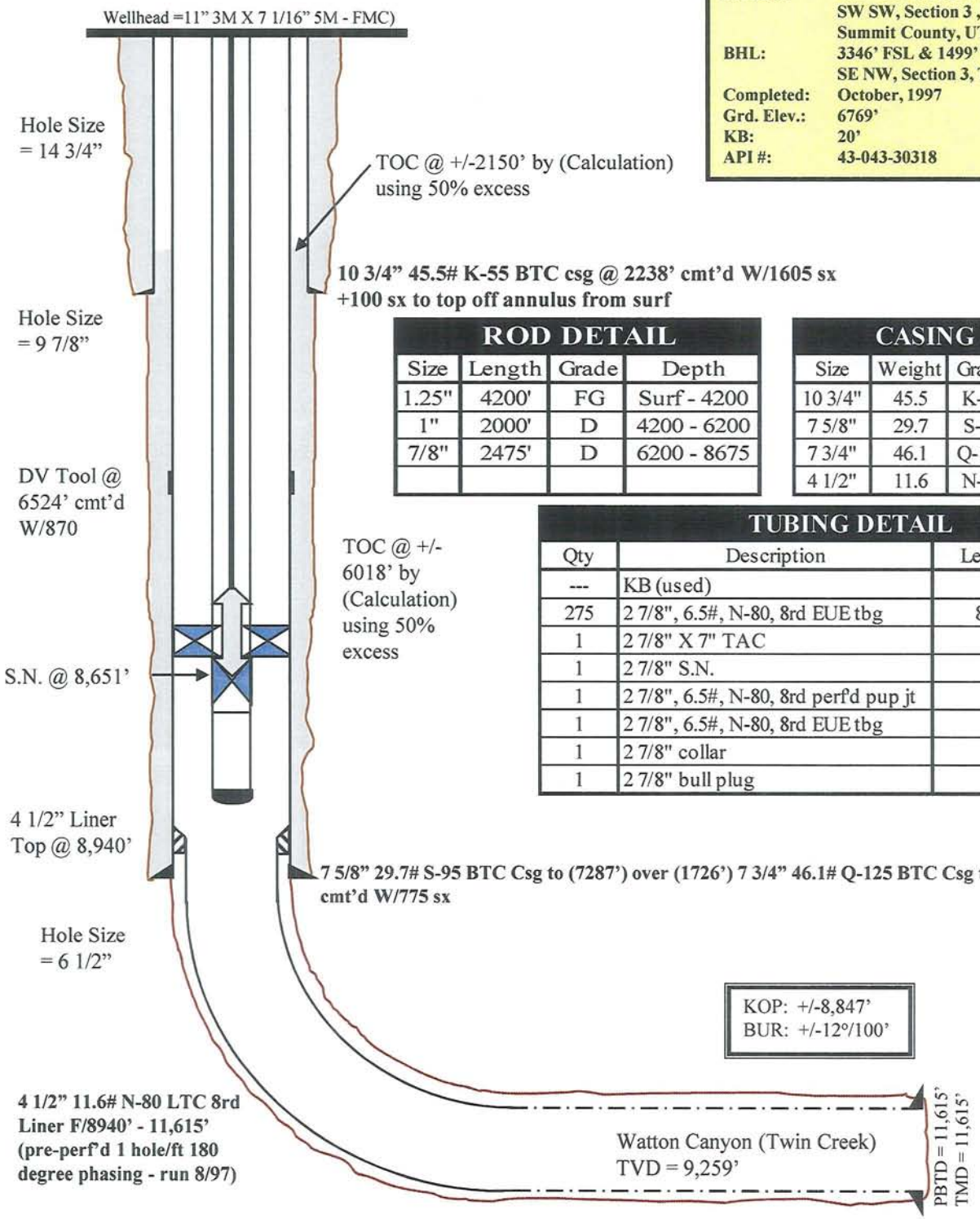

ROD DETAIL

Size	Length	Grade	Depth
1.25"	4200'	FG	Surf - 4200
1"	2000'	D	4200 - 6200
7/8"	2475'	D	6200 - 8675

CASING DETAIL

Size	Weight	Grade	Depth
10 3/4"	45.5	K-55	Surf - 2238
7 5/8"	29.7	S-95	Surf - 7287
7 3/4"	46.1	Q-125	7287 - 9013
4 1/2"	11.6	N-80	8940 - 11615

TUBING DETAIL

Qty	Description	Length	Depth
---	KB (used)	20	20.00
275	2 7/8", 6.5#, N-80, 8rd EUE tbg	8,628.00	8,648.00
1	2 7/8" X 7" TAC	3.00	8,651.00
1	2 7/8" S.N.	1.00	8,652.00
1	2 7/8", 6.5#, N-80, 8rd perf'd pup jt	4.00	8,656.00
1	2 7/8", 6.5#, N-80, 8rd EUE tbg	31.31	8,687.31
1	2 7/8" collar	0.44	8,687.75
1	2 7/8" bull plug	0.25	8,688.00

CITATION OIL AND GAS CORPORATION
WELLBORE DIAGRAM AND INFORMATION

Well Name:	UPRR #3-6	**Field:**	Pineview
Date:	February 20, 2003	**Location:**	SE/SE Sec. 3, T2N, R7E
County:	Summit	**State:**	Utah

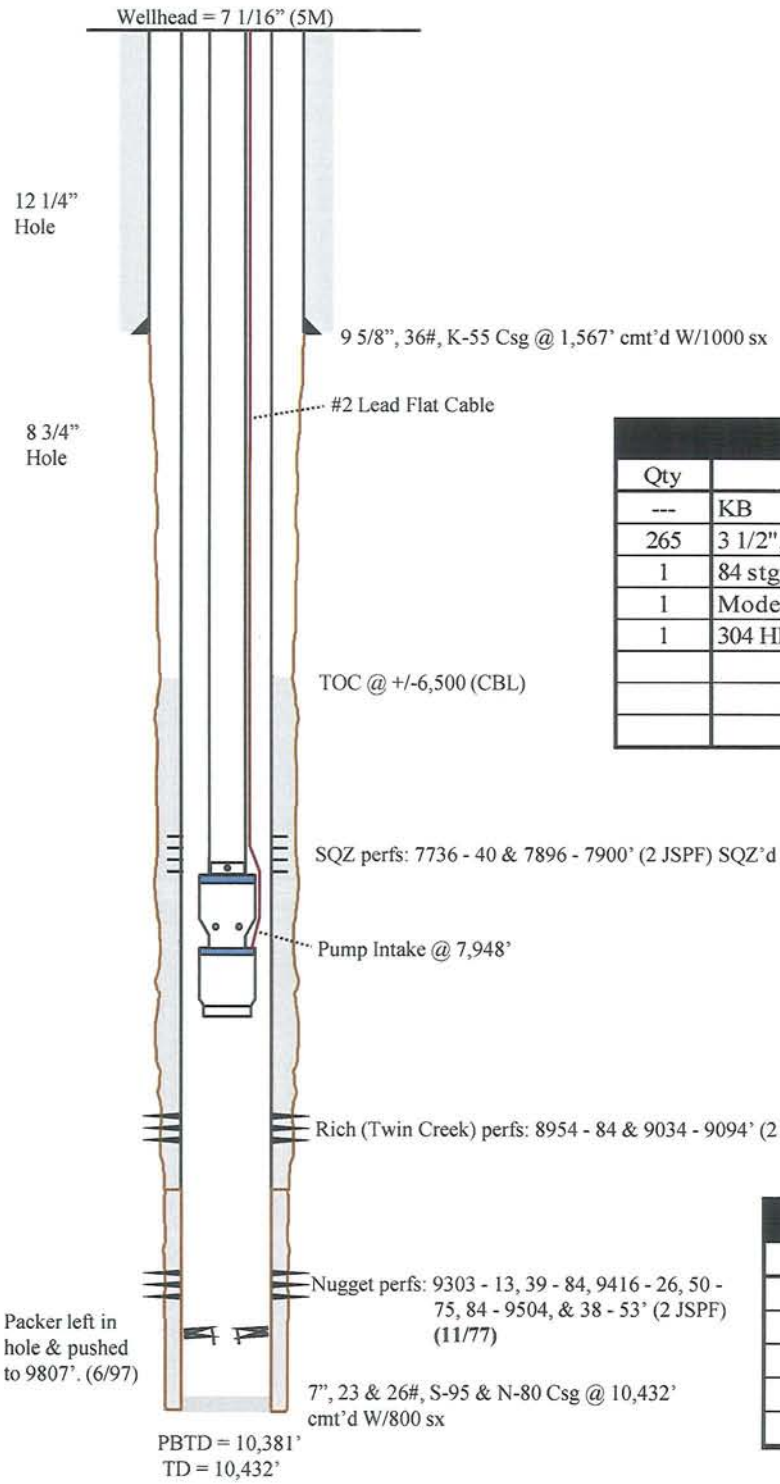

Surface:	**655' FSL & 656' FEL**
	Sec. 3, T-2-N, R-7-E
	Summit County, UT
Completed:	**November 1977**
Elevation:	**6,917'**
KB:	**17'**
API #:	**43-043-30036**

TUBING DETAIL

Qty	Description	Length	Depth
---	KB	17	17.00
265	3 1/2", 9.3 ppf, J-55, EUE tbg	7,901.40	7,918.40
1	84 stg GC8200 W/GRS-BAR intake	29.80	7,948.20
1	Model GSC-3 HL Seal	6.30	7,954.50
1	304 HP KMH 2145V x 69A motor	35.40	7,989.90

CASING DETAIL

Size	Weight	Grade	Depth
9 5/8"	36	K-55	Surf - 1567
7"	26	S-95	Surf - 2743
7"	23	N-80	2743 - 5158
7"	23	S-95	5158 - 10339
7"	26	N-80	10339 - 10432

CITATION OIL AND GAS CORPORATION
WELLBORE DIAGRAM AND INFORMATION

Well Name:	UPRR #3-9	**Field:**	Pineview
Date:	February 9, 2005	**Location:**	NE/SE Sec. 3, T2N, R7E
County:	Summit	**State:**	Utah

Surface:	**1984' FSL & 660' FEL Sec. 3, T-2-N, R-7-E Summit County, UT**
Completed:	**May 1981**
Elevation:	**6846' GL**
KB:	**17'**
API #:	**43-043-30151**

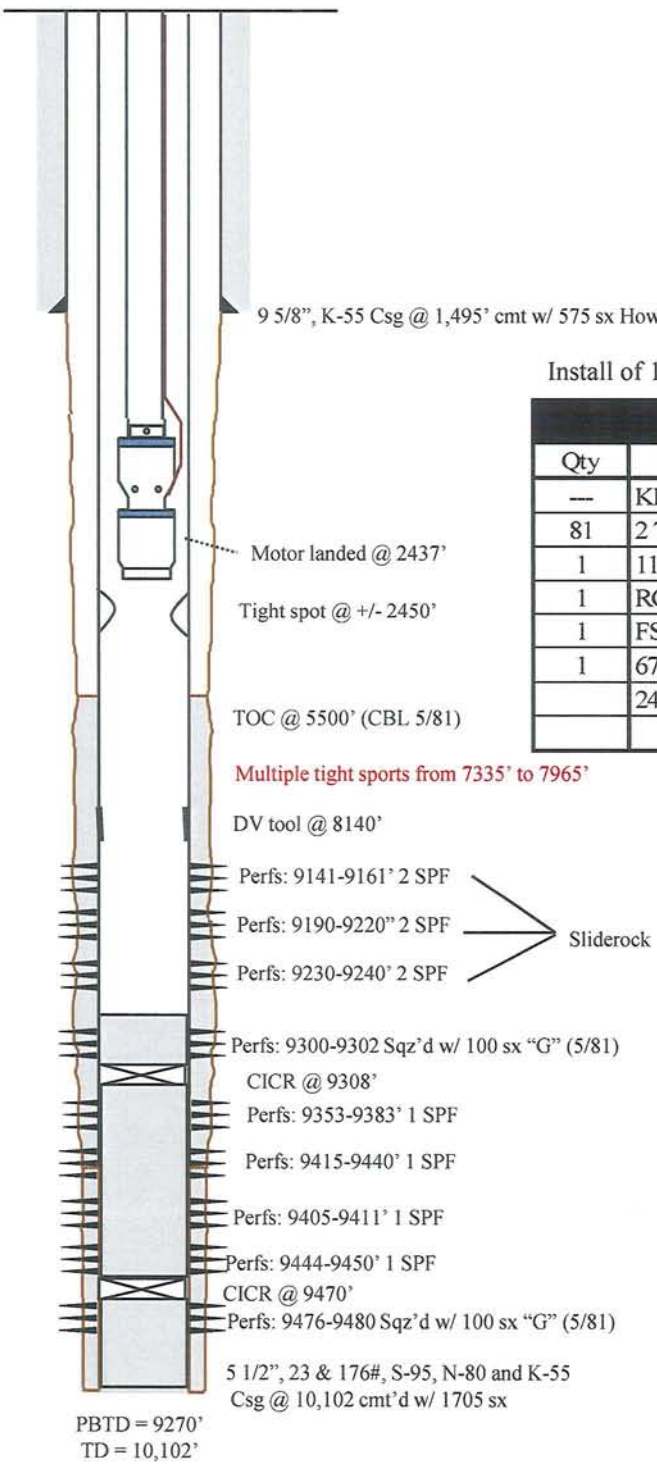

Install of 12-04:

TUBING DETAIL

Qty	Description	Length	Depth
---	KB	17	17.00
81	2 7/8" EUE	2,378.00	2,395.00
1	112 stg RA22	16.31	2,411.31
1	RGV intake	2.69	2,414.00
1	FSB3 seal w/ODI base	5.66	2,419.66
1	67.5 HP 1130V/38A RM250S mtr	17.24	2,436.90
	2400' #4CELF re-run		

CASING DETAIL

Size	Weight	Grade	Depth
5 1/2"	17	N-80	Surf – 3043
5 1/2"	17	K-55	3043 – 7168
5 1/2"	23	N-80	7168 – 7244
5 1/2"	23	S-95	7244 – 8147
5 1/2"	23	N-80	8147-10102

Date: 6-5-03

Citation Oil & Gas Corporation
Pineview Field, UPRR #3-10
Wellbore Diagram
Present Status

Ground Elevation = 6859'
RKB = 6883'
KB = 24'

Surface Location

1055' FSL & 1395' FEL,
SE NW, Sec. 3, T-2-N,
R-7-E, Summit County, UT

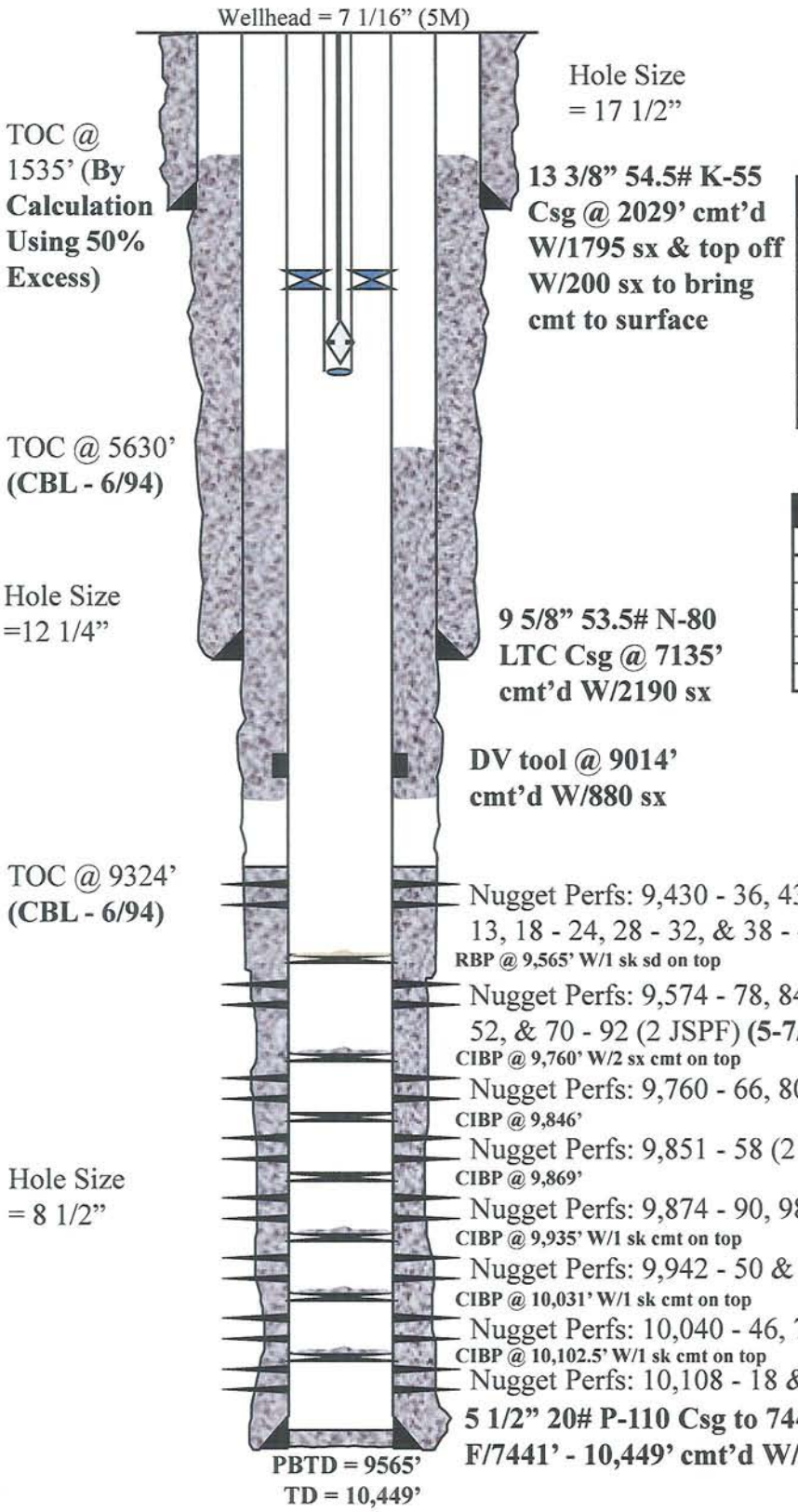

TUBING DETAIL			
Qty	Description	Length	Depth
---	KB (used)	0	0.00
125	2 7/8" 6.5# L-80 8rd EUE	3,970.00	3,970.00
1	2 7/8" X 5 1/2" TAC	2.08	3,972.08
1	4' pup jt	4.00	3,976.08
1	2 3/4" tbg pump	27.50	4,003.58

ROD & PUMP DETAIL			
Qty	Description	Length	Depth
68	1" guided rods	1700	1,700.00
92	7/8" guided rods	2,300.00	4,000.00
1	on/off tool		

Citation OIL & GAS CORP.

WELLBORE DIAGRAM AND INFORMATION

Well Name: UPRR #11-1 (P&A'd)
Field: Pineview
Location: 659' FNL & 661' FWL, T-2-N, R-7-E, Sec 11
County: Summit
State: Utah

D&C:	
P&A:	8/27/92 by Union Pacific Resources
Elevation:	6945' (GL), 6961' KB
KB:	16'
APR#	43-043-30027

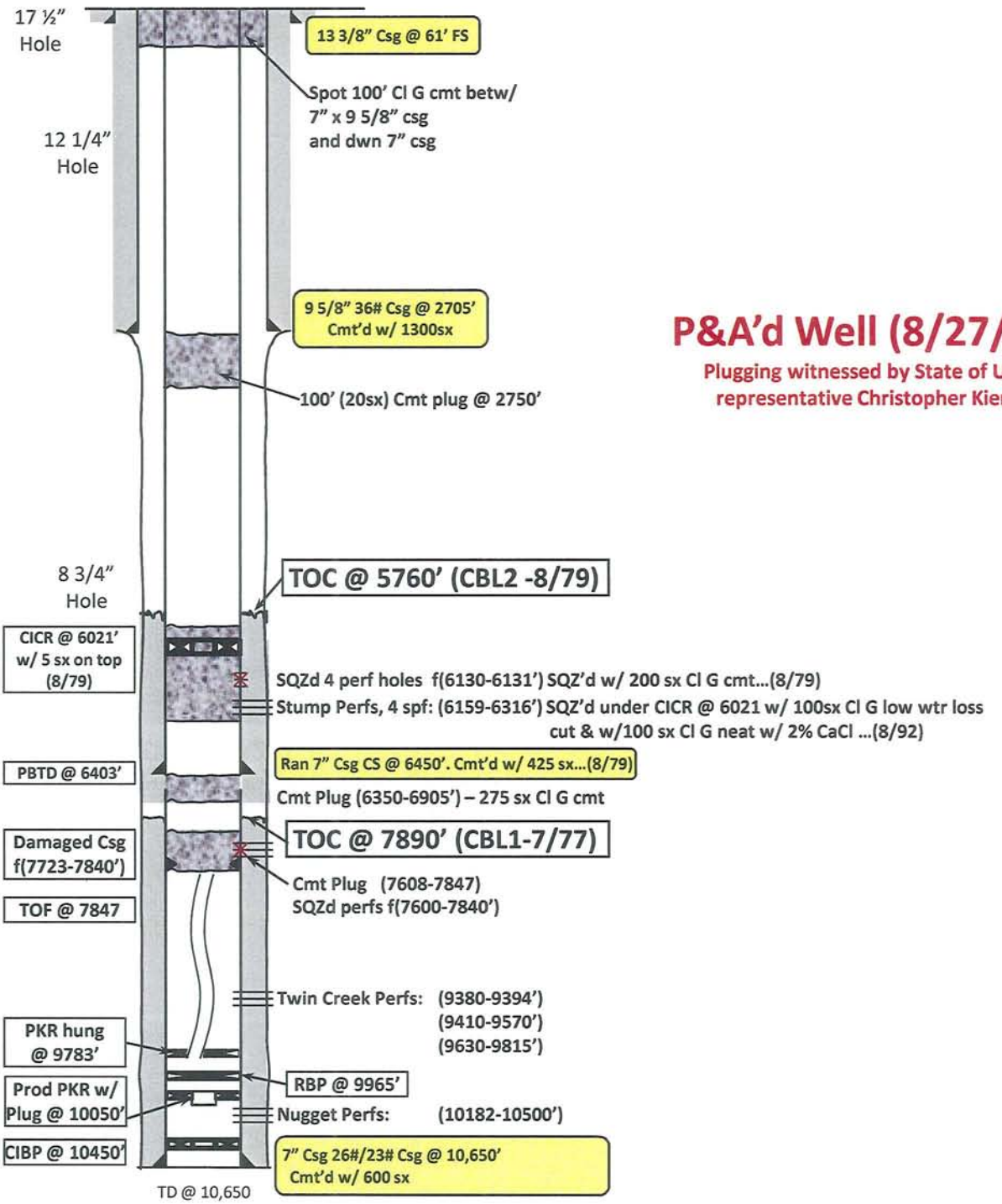

P&A'd Well (8/27/92)

Plugging witnessed by State of Utah representative Christopher Kierst

Date: 2-20-04

Citation Oil & Gas Corporation
Pineview UPRR #3-1
Wellbore Diagram
Present Status

Ground Elevation = 6660'
RKB = 6682'
KB = 22'

Surface Location

535' FNL & 760' FWL,
NW NW, Sec. 3, T-2-N,
R-7-E, Summit County, UT

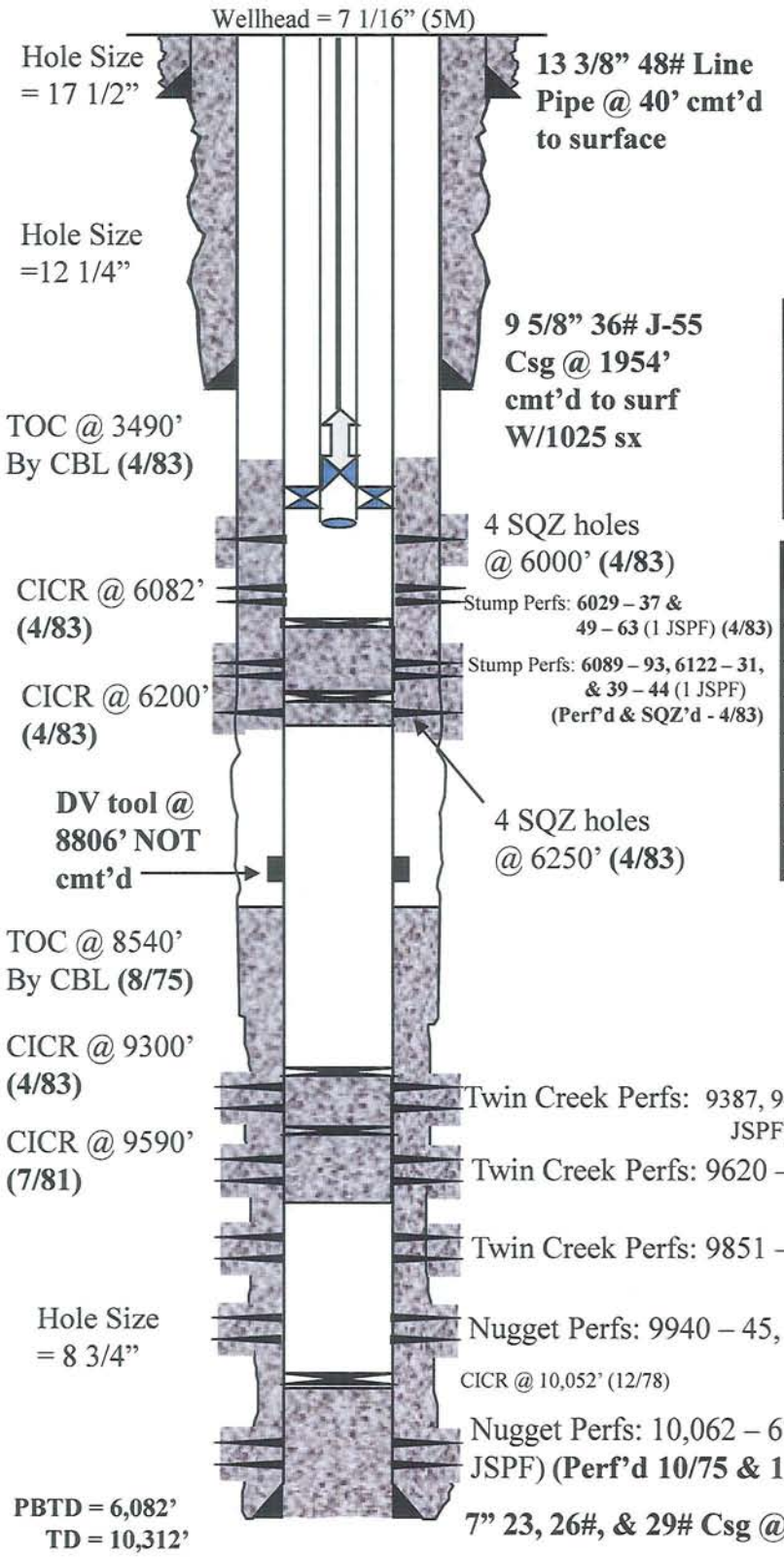

TUBING DETAIL

Qty	Description	Length	Depth
	KB	22	22.00
200	2 7/8", 6.5#, 8rd, EUE tbg	6,000.30	6,022.30
1	SN	1.10	6,023.40
1	2 7/8" X 7" TAC	2.45	6,025.85
1	2 7/8" MA	31.10	6,056.95

ROD & PUMP DETAIL

Qty	Description	Length	Depth
4	1" API Grade "D"	100	100.00
108	3/4" API Grade "D"	2700	2,800.00
66	7/8" API Grade "D"	1650	4,450.00
59	1" API Grade "D"	1475	5,925.00
Pump	25' X 1.5" X 24' RHBC		

PRODUCTION CASING DETAIL

Size	Weight	Grade	Depth
7"	23#	S-95	Surf - 2532'
7"	26#	K-55	2532 - 7801'
7"	29#	S-95	7801 - 8808'
7"	23#	S-95	8808 - 8944'
7"	26#	S-95	8944 - 9187'
7"	29#	N-80	9187 - 10003'
7"	29#	S-95	10003 - 10312'

Date: 02/22/2010

Citation OIL & GAS CORP.

CURRENT WELLBORE DIAGRAM AND INFORMATION

Well Name: UPRR #3-2
Field: Pineview
Location: 3245' FNL, 660' FWL, NW-SW, Sec 3, T-2-N, R-7-E
County: Summit
State: Utah

D&C:	**July 16, 1977**
Elevation:	**6581' (GL), 6606' KB**
KB:	**25'**

Production Test: 20 BO + 15 MCF + 443 BWPD (Dec 2009) (1719' FAP)

Pumping Unit
w/ ? Motor

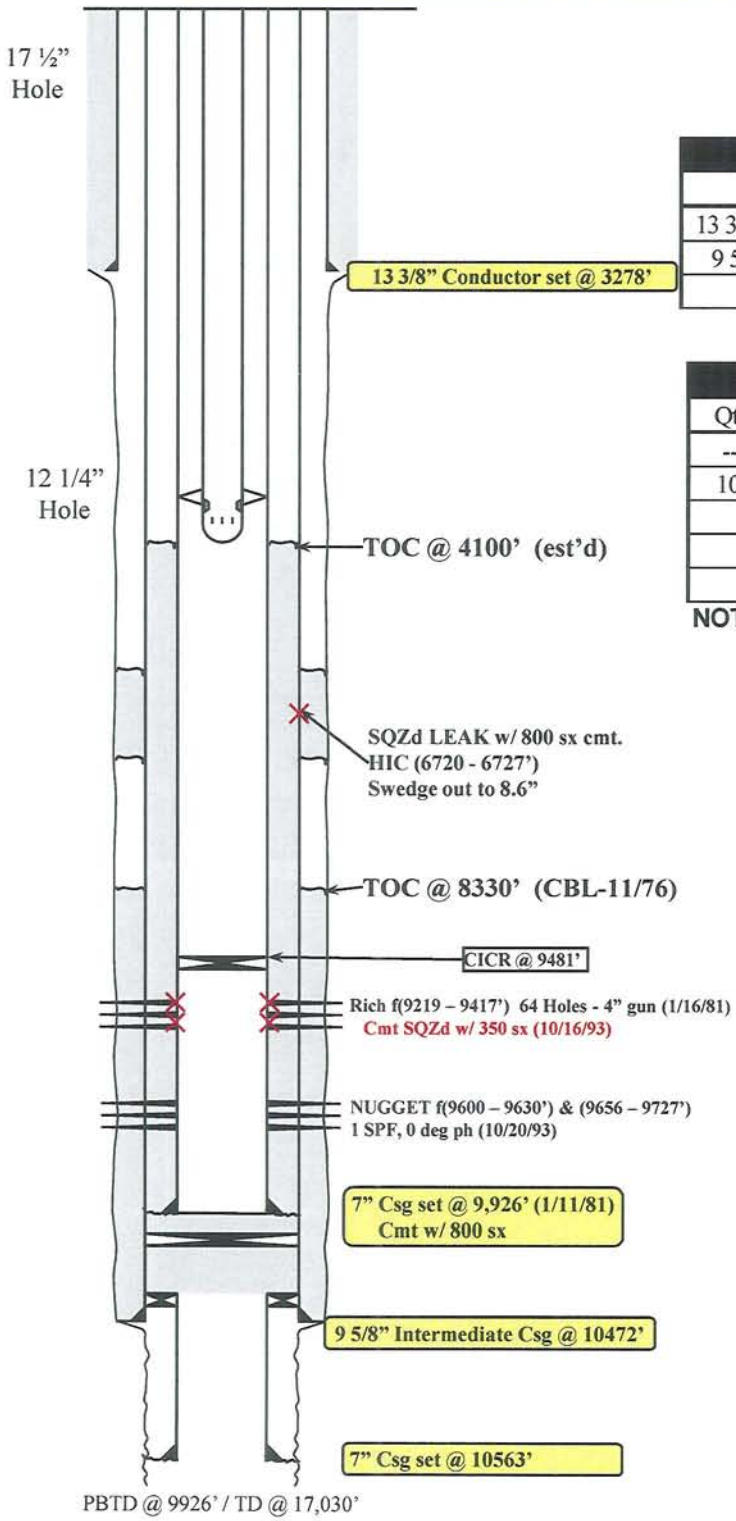

CASING DETAIL

Size	Weight	Grade	Depth	Cement
13 3/8" (17 1/2" Hole)	61#/68#	na	3278	2750 sx
9 5/8" (12 1/4" Hole)	47/43.5/40#	na	10,472	950 sx
7"	23#	S-95/N-80	9,925	800 sx

TUBING DETAIL

Qty	Description	Length	Depth
---	KB	25	25
104	2 7/8, 6.5#, N-80 (YB inspected Tbg)	3224	

NOTE: Depths Approximate

ROD DETAIL

Qty	Size	Type	Length
69	7/8"	MOG rods	1,725
1	7/8"	Rod	25
20	1"	Rods	500
59	1"	MOG rods	1,475
Polish Rod 1 1/2" x 30' PR			
Pump:			

DIVISION OF OIL, GAS AND MINING
UNDERGROUND INJECTION CONTROL PROGRAM

PERMIT STATEMENT OF BASIS

Applicant: Citation Oil & Gas Corp. **Well:** Bingham 10-1

Location: S 10, T2N, R7E, Summit Co., UT **API:** 43-043-30025

Ownership Issues:

The Bingham 10-1 well is located on land privately owned by B. A. Bingham & Sons, LLC. Mineral rights are also privately owned. An affidavit of notification of operators, mineral owners, and surface owners located within a one-half (1/2) mile radius has been provided.

Well Integrity:

Description of the Casings and Cement:

CASING PROGRAM

String Type	Hole Size	Depth	Feet	Casing Diameter	Weight	Grade
Conductor	17 ¼"	60'	60'	13-3/8"	61#	unknown
Surface	12 ¼"	2500'	2500'	9-5/8"	36#	K-55 ST & C
Intermediate	8-3/8"	10,380'	10,380'	7"	23/26#	S-95 & N-80
Liner	"	9,806'	2460'	4 ½ "	13.5/15.1#	L-80

CEMENT PROGRAM

String Type	DV Depth	Stage Lead/Tail	Cement Bottom	Cement Top	Number Sacks	Cement Type	Cement Yield	Cement Weight
Conductor			60'	Surface	250	?	?	?
Surface		Lead Tail	2500	Surface	1100	?	?	?
Intermediate		Lead Tail		6365' (?) (CBL)	2631	?	?	?
Liner		?	9,806	7,346	580	?	?	?

Citation Oil & Gas Corp. proposes to inject produced water from oil and gas production from the Nugget Sandstone and Twin Creek Limestone in the Pineview Field. A current list of sources, consisting of nine wells, is included with the UIC Permit Application. Citation Oil & Gas Corp. will submit an annual list of sources for the prior year with the annual fluid injection report and fluid analyses.

A cement bond log demonstrates cement bond in this well up to about 6365 feet depth. In the application submitted by Citation, the proposed gross injection interval extends from 9300 feet to 10,268 feet. This interval includes approximately the uppermost 600 feet of the Nugget Sandstone and the lowermost 400 feet of the overlying Twin Creek Limestone (Gypsum Spring, Sliderock, and Rich Members). However, the initial injection is targeted for the upper and middle parts of the Nugget Sandstone, between 9707 and 10,220 feet. The wellbore diagram and additional file information for the abandoned Bingham 10-2 (43-043-30016) well, located about one-half mile west of the Bingham 10-1 well, indicates casing damage at a depth of 6278 feet, with stuck tubing at 6307 and stuck rods at 6337. Dustin Doucet of DOGM has discussed concerns regarding these wellbore problems with the engineering personnel at Citation. Until Citation can provide more conclusive evidence that these wellbore problems will not provide a possible conduit for injected water to leak uphole, it is suggested that the injection interval be limited to only the Nugget Sandstone. Anhydrite layers in the Gypsum Spring Member of the

Twin Creek Limestone, which directly overlies the Nugget, should provide an adequate vertical seal for water injected into the Nugget. The Bingham 10-2 well has been plugged back to a depth of 10,053 feet, which is about 70 feet above the top of the Gypsum Spring. This should provide an adequate margin of safety within the Bingham 10-2 wellbore, provided injection is limited to the Nugget.

In the Bingham 10-1 well the cement bond log in the interval above the proposed injection interval appears to demonstrate adequate cement bond. Dresser Atlas ran the acoustic cement bond log at the time of the well completion in 1976. The amplitude (percent unbonded pipe signal) is plotted on a quasi-logarithmic scale (1-100). There is also a gamma ray track scaled in 1-100 API units and an acoustic signature track, scaled 100-1100 microseconds. There are no variable density (VDL), transit time, or caliper tracks included with the acoustic cement bond log.

The expected free pipe amplitude for 7-inch diameter steel casing is 62 mV. The log shows a maximum amplitude of approximately 62 mV, representing 0% bond. A value of 2 mV was estimated to represent 100% bond. This yields a value of about 4 mV for the required 80% bond. Using the maximum value of 4 mV on the bond log for 80% bond, it appears that there are about 110 net feet of suitable cement bond in the approximately 450-foot interval (9250′ to 9700′) above the proposed Nugget injection interval (9707′-10,220′). However, from about 9000′ up to about 8370′, near the top of the Twin Creek Limestone, good cement bond appears nearly continuous, with only relatively small gaps. Based on interpretation of the cement bond log, there appears to be an adequate amount of good cement bond to protect groundwater aquifers above the injection zone.

Inasmuch as the aforementioned cement bond log is of marginal quality, it was requested by Chris Kierst of DOGM that Citation consider running a more modern, high quality cement bond log in the well. However, as confirmed by Schlumberger,

there are technical problems with running a new log, arising from the fact that there is a 4 ½″ liner within the 7″ casing from 7346 to 9806 feet depth in the Bingham 10-1 well.

Because of the questionable quality of the existing cement bond log, in order to determine if there is leakage around the well casing, Citation will be required to run a Radioactive Tracer Survey (RATS) after the packer has been placed in the well. If the RATS demonstrates leakage through the existing cement, Citation will be required to squeeze additional cement behind casing up into the surface casing. The 7″ casing and 4 ½ " liner will be perforated, and cement will be placed in the annular space between the 7″ casing and the 8 3/8″ diameter hole. A 2 3/8 inch injection IPC tubing with an In Tandem Packer system will be set with a lower packer at 9643 feet and an upper packer at approximately 8500 feet. The current cast iron bridge plug (CIBP), which is set at 9810 feet, will be drilled out to the top of the Model D Packer at 9882 feet. If possible, both the CIBP and Model D Packer will be drilled down to TD, at approximately 10,380 feet. A mechanical integrity test, with advance notification to DOGM, will be run on the well prior to injection. There are three producing oil wells and four plugged and abandoned wells within the (0.5 mile radius) AOR.

The proposed average injection rate is estimated to be 5,000 barrels per day. The maximum anticipated injection rate is 10,200 barrels per day, but the maximum allowed injection pressure will limit it.

Ground Water Protection:

The Utah Division of Water Rights shows no water rights filed within a 0.5-mile radius of Bingham 10-1 well. Within a 1-mile radius there are water rights filed to the

north and northwest in Section 3. These include surface rights along Chalk Creek, three springs, and two wells. The wells are 325 feet and 405 feet deep. These wells appear to be drilled through alluvial terrace deposits into the Wasatch Formation. Citation reports that (according to drillers' logs and personal communication from local residents) wells in the area range from 46 feet to 500 feet deep and draw water from the Quaternary alluvium or Tertiary sandstones and siltstones. The water is used for domestic purposes, stock water, and irrigation.

In the area of the Pineview field, moderately saline groundwater (3000-10,000 mg/l TDS) extends to considerable depth. Water analyses from wells in the area indicate water in the Stump Formation (uppermost Jurassic sandstone) with TDS of about 2,000 mg/l at a depth of greater than 6,000 feet. In a well about one mile northwest of Bingham 10-1, a water analysis from the Kelvin Formation (lower Cretaceous sandstone) indicates TDS of about 1500 mg/l at a depth of more than 3,000 feet. It is not clear at exactly what depth the base of moderately saline groundwater might be found. However, water within the projected injection intervals is far more saline. Water samples from the Nugget Sandstone range from about 23,000 mg/l to more than 43,000 mg/l, and samples from the Twin Creek Limestone range from about 25,000 to 33,000 mg/l.

The anticipated average injection pressure is 1100 psig. However, a step-rate test will be performed during recompletion to determine the fracture parting pressure of the Nugget Sandstone through the proposed injection interval. Based on the results of the step-rate test, a final maximum pressure, which is below the fracture parting pressure, will be requested. This will ensure that injection will not initiate any new fractures or propagate existing fractures through the overlying strata or confining interval, which could enable the injected fluid or formation fluid to enter into fresh water formations. Any groundwater present should be adequately protected.

The application submitted by Citation includes standard laboratory water analyses of produced water from nine nearby wells in the Pineview field. All nine wells, which are operated by Citation Oil & Gas Corp., generate produced water associated with oil production from the Nugget Sandstone and Twin Creek Limestone. This produced water will be disposed in the Bingham 10-1 SWD. The water analyses show an average specific gravity of 1.028 (with a range of 1.02 to 1.06), an average TDS of 34,021 ppm (with a range of 30,469 ppm to 38,880 ppm), and an average pH of about 6.2 (with a range of 5.5 to 7.0).

The initial proposed injection interval targets high-porosity sandstone layers in the upper and middle portions of the Nugget Sandstone. A total of 8 intervals, ranging from 5 to 25 feet thick, are targeted for injection. Above the proposed injection interval in the Nugget Sandstone is the Gypsum Spring Member at the base of the Twin Creek Limestone. Although the Gypsum Spring is generally about 50 feet thick across the Area of Review, it appears to be about 70 feet thick in the Bingham 10-1 well and consists of red shale and siltstone with several layers of anhydrite. The Gypsum Spring is continuous across the area and should serve as an upper seal for the injection interval in the Nugget Sandstone.

Citation has requested that the Bingham 10-1 well also be permitted for injection in the lower part of the Twin Creek Limestone, up to a depth of 9300 feet, which is approximately at the top of the Rich Member. The Rich Member is overlain by the Boundary Ridge Member, which generally consists of shale, shaly limestone, and a little anhydrite. In this area it is generally only about 40 to 50 feet thick. It would serve to some extent as an upper seal for the lower Twin Creek injection interval, but its adequacy is somewhat questionable. Above the Twin Creek Limestone is the upper Jurassic Preuss Sandstone. Within the lower part of the Preuss are several salt beds. Although the cross sections provided by Citation seem to suggest salt beds as thick as 400 feet or more, close examination of geophysical logs and

sample logs suggests that there are probably several salt beds, generally 10 to 20 feet thick or thinner, interbedded with much larger intervals of siltstone or shale. Nevertheless, the lower part of the Preuss should provide an effective upper seal to groundwater movement. For reasons pertaining to concerns about the integrity of the wellbore in Bingham 10-2, as discussed above, it is recommended that at this time the injection be restricted to the Nugget Sandstone. If Citation can demonstrate conclusively the integrity of the Bingham 10-2 wellbore, permission to inject into the Twin Creek might be granted at a later date.

As an attachment to the application, Citation includes a local structure contour map on the top of the Nugget Sandstone. This map indicates that the Bingham 10-1 well is located on the southwest flank of an asymmetric dome structure, with steeper flanks generally on the north and east sides and gentler flanks on the south and west. The dome structure in bounded on the east, north, and south by an arcuate pattern of thrust faults, with thrusting indicated to be from the west. Three small, parallel northeast-southwest trending thrust faults, with minor displacements, are indicated to cut the south and east flanks of the dome. The Bingham 10-1 well is indicated to be about ½ mile southwest of the crest of the dome and about 600 feet structurally lower than the crest. The structure map indicates the original oil/water contact elevation as −3429 feet, which is about 1100 lower than the crest of the dome. Citation has not provided information to delineate the current oil/water contact. However, calculations show that the highest proposed perforations in the Nugget Sandstone in the Bingham 10-1 well are structurally down dip from the lowest active Nugget perforations in the producing wells within the AOR. Therefore, injecting water in the Bingham 10-1 well should not interfere with oil production in the remaining producing wells nearby.

Citation proposes the injection of produced waters from the Nugget Sandstone in

the Pineview field into the proposed injection interval in the middle and upper Nugget Sandstone in the Bingham 10-1 SWD well. Pursuant to review of the application and documentation submitted by Citation, it appears that the injection should cause no diminution of the quality of the already generally poor quality water in the injection zone. After injection ceases, increased pressure around the wellbore will abate over time. No long term negative impacts to surface or ground water are anticipated as a result of the proposed injection operation.

Oil/Gas & Other Mineral Resources Protection:

The Pineview field is located in the southern portion of the Utah-Wyoming Overthrust, north of the Uinta Mountains. The field was discovered with the American Quasar 1-Newton Sheep well in January 1975. The trap consists of a structural trap with simple 4-way and fault closure. Production is primarily from the Nugget Sandstone (Jurassic), consisting of eolian dune sand, and the overlying Twin Creek Limestone (Jurassic), consisting of fractured limestone. Most of the production comes from depths between 9,000 and 10,000 feet, with an extreme range between about 8,400 and 16,700 feet.

No other known potentially producible mineral or hydrocarbon zones are reported in the area. The current status of the Bingham 10-1 well is a temporarily abandoned oil well. It has produced from both the Nugget Sandstone and the Twin Creek Limestone. The well records of the Division document that there are three other producing oil wells within the 0.5 mile radius of the AOR, all located northwest of the Bingham 10-1 well. One well produces from the Nugget, another from the Twin Creek, and the third from both Nugget and Twin Creek. In addition, there are four plugged and abandoned water disposal wells in the AOR, two of which were formerly oil producers.

Bonding:

Citation Oil & Gas Corp. has a $120,000 blanket surety bond in place, which ensures plugging of this well. Bond No. 104325628 is issued by Travelers Casualty and Surety Company of America.

Information and Corrective Actions Needed:

1. A water sample is needed from the proposed injection interval in the Nugget Sandstone in the Bingham 10-1SWD well. At that time it will be necessary to establish compatibility between the water sample from the proposed injection interval and samples of the proposed injection fluids.
   Update (8/4/2010): Citation submitted a water compatibility table titled "Saturation Index Calculations Based on CO2 Content in Water" (dated 6/14/2010). The analyses were done by Champion Technologies, Inc. in Vernal, Utah. The table adequately demonstrates water compatibility.
2. It will be required to run a radioactive tracer survey (RATS) through and above the proposed water injection interval to determine if there is suitable cement bond to prevent migration of injected fluids upward around the well casing.
   Update (8/4/2010): A RATS was run by Production Logging Services, Inc. on 7/21/2010. The log indicates no leakage above the packers or top perforations. Therefore, the RATS indicates adequate cement bond above the proposed injection interval in the Nugget Sandstone (9822-9936 feet).
3. A step-rate test will be required during recompletion in order to determine the fracture parting pressure through the proposed injection interval.
   Update (8/4/2010): A step-rate test was run by CUDD Energy Services on 7/23/2010. Citation indicates that there was a computer malfunction during the test, which caused the chart to indicate shorter time intervals for the last four steps, but Citation states that all steps were actually 30 minutes long. Division

staff expressed concerns that there was no clear break over point to indicate fracture pressure, and that the test may not have included steps at high enough pressures. Most other injection wells in the area are permitted at maximum pressures of about 2500 psi. Nevertheless, it was concluded that the results of the step-rate test adequately support granting the original request for a maximum injection pressure of 1100 psi, and a UIC permit was issued on 8/4/2010. However, it was determined that any future request for a higher injection pressure will require further evaluation, perhaps including the running of another step-rate test.

Update (10/28/2010): Injection commenced on 8/13/2010 with a Maximum Allowable Surface Pressure for injection at 1100 psi. On 9/29/2010 Citation submitted a request (attached letter dated 9/21/2010) to increase the maximum pressure for injection from 1100 psi to 2000 psi, without performing an additional step-rate test. Citation made the case that increasing the surface injection pressure to 2000 psi would not cause a problem, based on the estimated fracture pressure of the Nugget Sandstone. Fracture pressures are provided for the nearby Bingham 2-1 and Bingham 2-1A SWD wells, both of which are permitted for injection at 2500 psi. DOGM petroleum engineer Dustin Doucet concurred with Citation's assertion. An amended permit, allowing injection at 2000 psi, was issued on 10/28/2010. The justification and approval are based on the current wellbore configuration. If the wellbore configuration were to change, it may be required to re-submit the justification in order to maintain the currently permitted Maximum Allowable Surface Pressure at 2000 psi.

Actions Taken and Further Approvals Needed:

Notice of this application was published in the Salt Lake Tribune and the Park Record (Park City). In addition, copies of the notice were provided to the

Environmental Protection Agency (EPA), Region VIII, the Summit County Commissioner, and the Operator.

A properly designed and constructed water disposal well, combined with periodic mechanical integrity tests, poses no threat to fresh or useable groundwater supplies.

The Division staff recommends approval of this application, with injection limited to the Nugget Sandstone, contingent upon no additional or unforeseen information being presented that is relevant to this analysis or modifies the data presented herein.

Reviewer(s): Mark L. Reinbold Date: 4/6/2010 (updated 8/4/2010 & 10/28/2010)

Citation OIL & GAS CORP.

DAILY WORKOVER REPORT

Field:	Bingham	Well:	10-1	Date:	9/21/2009
Rpt #:	1			AFE #:	090372
Rig #:	#4	Reported By:	V. Meadows	AFE Amount:	$200,000

Objective: Recomplete in Slide Rock / RTWTP

Current Activity: Scan tbg OOH, RIHw/ B&S into liner CHC

Details of Past 24 Hrs Operations

9/18/09, Roaded Miles Well service rig from Vernal Ut. To Pineview field.MIRU on Bingham 10-1. MI rig pump and tnk. MI & racked 85 jts of 2 7/8" L80 inspected tbg. From pipe yard. ND well head & NU BOP & Anular. Well still on vac. From chem.treating.

9/21/09, Started rig, had safety meeting. Vented well, RU spoolers and POOH w/ tbg and cable. with 68 stds out well was starting to flow up tbg. Tried to pump down tbg but was unalble to. changed over to csg but couldn't circ. well up tbg. PO w/ a few more jts but had to stop and pump production wtr dn csg to keep well dead a couple of times. Pulled last 10 stds wet but was just wtr. Tbg looked good. Did find three bad collar. Pitted bad. LD Electr-Sub Assy. Motor was wet but didn't look too bad. No corrosion. MU SN, B&S& tallied tbg IH. Tagged TOL @ 7354'. PU 1jt. SWIFN MI and racked 225 jts 2 3/8" L80 rented W/S.

RECEIVED
FEB 02 2010
DIV. OF OIL, GAS & MINING

Daily Well Cost

Description	Day Cost	Cum. Cost	Description	Day Cost	Cum. Cost
Rig Cost:	$10,030	$10,030	Casing:		
Contract Labor:	$200	$200	Tubing:		
Rental Equipment	$800	$800	Wellhead:		
Wireline/Logging:			Artificial Lift:		
Dn Hole Tools & Service			Scale & H2S Squeeze		
Supervision:			Centrilift Service	$5,312	$5,312
Stimulation					
Bit & Scraper					
Trucking					
Water	$640	$640			
Hot Oiler					
Paraffin Chem					
			Total Daily Cost:	$16,982	
			Cumulative Well Cost:		$16,982

Citation OIL & GAS CORP.

DAILY WORKOVER REPORT

Field:	Bingham	Well:	10-1	Date:	9/22/2009
Rpt #:	2			AFE #:	090372
Rig #:	#4	Reported By:	V. Meadows	AFE Amount:	$200,000

Objective: Recomplete in Slide Rock / RTWTP

Current Activity: Spot KCL & swab / POOH w/ tbg

Details of Past 24 Hrs Operations

Vented off well. Well had a little gas on it. MI RU pipe scanners. Had safety meeting. Scanned OOH w/ 2 7/8 tbg. Scanned a total of 257 jts. J55 and L80. LD 73 jts, red & green. 69 yellow & 115 blue. LD 7" B&S. RD MO scanners. MU 3 7/8" bit and 4 1/2" scrapper, S/N on 2 3/8" L80 tbg. RIH to 6816' SDFN.

Daily Well Cost

Description	Day Cost	Cum. Cost	Description	Day Cost	Cum. Cost
Rig Cost:	$5,456	$15,486	Casing:		
Contract Labor:	$200	$400	Tubing:Rental	$990	$990
Rental Equipment	$880	$1,680	Wellhead:		
Wireline/Logging:			Artificial Lift:		
Dn Hole Tools & Service			Scale & H2S Squeeze		
Supervision:			Centrilift Service		$5,312
Stimulation			BHA (cable, pump, etc)		
Bit & Scraper	$300	$300			
Trucking	$1,440	$1,440			
Water	$640	$1,280			
Hot Oiler					
Paraffin Chem					
			Total Daily Cost:	$9,906	
			Cumulative Well Cost:		$26,888

Citation OIL & GAS CORP.

DAILY WORKOVER REPORT

Field:	Bingham	Well:	10-1	Date:	9/23/2009
Rpt #:	3			AFE #:	090372
Rig #:	#4	Reported By:	V. Meadows	AFE Amount:	$200,000

Objective: Recomplete in Slide Rock / RTWTP

Current Activity: Circ. Hole / spot KCL fluid and swab

Details of Past 24 Hrs Operations

Vented off well. Nothing on well. Held safety meeting. Continued in hole w/ B&S. Taking weight at 8674' tried to work through it but no luck. Called for Power swivel, POOH. Checked drift on 15.1# liner and founld 3 7/8" bit too big. Called for 3 5/8" bit. Changed out bit and TIH with tbg & B&S. Tagged PBTD @ 9764.78'. POOH w/ 15 stds.so B&S is above perfs. SWIFN

Daily Well Cost

Description	Day Cost	Cum. Cost	Description	Day Cost	Cum. Cost
Rig Cost:	$4,818	$20,304	Casing:		
Contract Labor:	$300	$700	Tubing: Rental	$990	$1,980
Rental Equipment	$650	$2,330	Wellhead:		
Wireline/Logging:			Artificial Lift:		
Dn Hole Tools & Service			Scale & H2S Squeeze		
Supervision:			Centrilift Service		$5,312
Stimulation			BHA (cable, pump, etc)		
Bit & Scraper	$300	$600			
Trucking		$1,440			
Water	$680	$1,960			
Hot Oiler					
Paraffin Chem					
			Total Daily Cost:	$7,738	
			Cumulative Well Cost:		$34,626

Citation OIL & GAS CORP.

DAILY WORKOVER REPORT

Field:	Bingham	Well:	10-1	Date:	9/24/2009
Rpt #:	4			AFE #:	090372
Rig #:	#4	Reported By:	V. Meadows	AFE Amount:	$200,000

Objective: Recomplete in Slide Rock / RTWTP

Current Activity: MI RU WL run log & shoot new perfs.

Details of Past 24 Hrs Operations

Vent off well. Held safety meeting. RIH w/ 15 std to PBTD and circ well clean w/ 370 bbls clean PW. RU pump truck and spotted 42 bbls of 2 % KCL followed w/ 28 bbls PW. PUH & LD 8jts & POOH w/ 34 more std. RU swab. Made 8 runs with swab. Swabbed to SFL 1850'. TOOH w/ 115stds standing back.SWIFN

Daily Well Cost

Description	Day Cost	Cum. Cost	Description	Day Cost	Cum. Cost
Rig Cost:	$4,884	$25,188	Casing:		
Contract Labor:		$700	Tubing:Rental	$991	$2,971
Rental Equipment	$700	$3,030	Wellhead:		
Wireline/Logging:			Artificial Lift:		
Dn Hole Tools & Service			Scale & H2S Squeeze		
Supervision:			Centrilift Service		$5,312
Stimulation			BHA (cable, pump, etc)		
Bit & Scraper	$300	$900	Pump Truck & KCL	$1,365	$1,365
Trucking		$1,440			
Water	$480	$2,440			
Hot Oiler					
Paraffin Chem					
			Total Daily Cost:	$8,720	
			Cumulative Well Cost:		$43,346

Citation OIL & GAS CORP.

DAILY WORKOVER REPORT

Field:	Bingham	Well:	10-1	Date:	9/25/2009
Rpt #:	5			AFE #:	090372
Rig #:	#4	Reported By:	V. Meadows	AFE Amount:	$200,000

Objective: Recomplete in Slide Rock / RTWTP

Current Activity: Hydro test tbg / RIH w/ PKR

Details of Past 24 Hrs Operations

Vented off well. MI Schumberger WL. Held safety meeting. NU WL BOP & lubrictor. RIH and correlated to DL log. RIH and shot first tree interval & 10' of top interval when perf gun head malfunctioned. Tried three more runs and finally got the rest of the perfs shot. Total of 284 perfs, 4 intervals and 70' total. RD WL MO. SWIFN

Daily Well Cost

Description	Day Cost	Cum. Cost	Description	Day Cost	Cum. Cost
Rig Cost:	$5,025	$30,213	Casing:		
Contract Labor:		$700	Tubing: Rental	$991	$3,962
Rental Equipment	$700	$3,730	Wellhead:		
Wireline/Logging:	$11,812	$11,812	Artificial Lift:		
Dn Hole Tools & Service			Scale & H2S Squeeze		
Supervision:			Centrilift Service		$5,312
Stimulation			BHA (cable, pump, etc)		
Bit & Scraper		$900	Pump Truck & KCL		$1,365
Trucking		$1,440			
Water		$2,440			
Hot Oiler					
Paraffin Chem					
			Total Daily Cost:	$18,528	
			Cumulative Well Cost:		$61,874

Citation OIL & GAS CORP.

DAILY WORKOVER REPORT

Field:	Bingham	Well:	10-1	Date:	9/26/2009
Rpt #:	6			AFE #:	090372
Rig #:	#4	Reported By:	V. Meadows	AFE Amount:	$200,000

Objective: Recomplete in Slide Rock / RTWTP

Current Activity: Stimulate well

Details of Past 24 Hrs Operations

Vented off well. Held safety meeting. MI,RU Hydro tester. MU 4 1/2" retrieveomatic PKR. PU PKR & RIH hyro testing to 9000#. Had one bad collar, replaced same. RI & set PKR w/ 15K compression @ 9490'. RD MO Hydro tester. SWIFD

Daily Well Cost

Description	Day Cost	Cum. Cost	Description	Day Cost	Cum. Cost
Rig Cost:	$3,590	$33,803	Casing:		
Contract Labor:		$700	Tubing:	$911	$4,873
Rental Equipment	$700	$4,430	Wellhead:		
Wireline/Logging:		$11,812	Artificial Lift:		
Dn Hole Tools & Service	$2,609	$2,609	Scale & H2S Squeeze		
Supervision:			Centrilift Service		$5,312
Stimulation			BHA (cable, pump, etc)		
Bit & Scraper		$900	Pump Truck & KCL		$1,365
Trucking		$1,440			
Water		$2,440			
Hot Oiler					
Paraffin Chem					
			Total Daily Cost:	$7,810	
			Cumulative Well Cost:		$69,684

Citation OIL & GAS CORP.

DAILY WORKOVER REPORT

Field:	Bingham	Well:	10-1	Date:	9/27/2009
Rpt #:	7			AFE #:	090372
Rig #:	#4	Reported By:	V. Meadows	AFE Amount:	$200,000

Objective: Recomplete in Slide Rock / RTWTP

Current Activity: Stimulate well

Details of Past 24 Hrs Operations

SDFD / MI spotted Cudd Energy service on location.

Daily Well Cost

Description	Day Cost	Cum. Cost	Description	Day Cost	Cum. Cost
Rig Cost:		$33,803	Casing:		
Contract Labor:		$700	Tubing:	$991	$5,864
Rental Equipment	$700	$5,130	Wellhead:		
Wireline/Logging:		$11,812	Artificial Lift:		
Dn Hole Tools & Service		$2,609	Scale & H2S Squeeze		
Supervision:			Centrilift Service		$5,312
Stimulation			BHA (cable, pump, etc)		
Bit & Scraper		$900	Pump Truck & KCL		$1,365
Trucking		$1,440			
Water		$2,440			
Hot Oiler					
Paraffin Chem					
			Total Daily Cost:	$1,691	
			Cumulative Well Cost:		$71,375

Citation OIL & GAS CORP.

DAILY WORKOVER REPORT

Field:	Bingham	Well:	10-1	Date:	9/28/2009
Rpt #:	8			AFE #:	090372
Rig #:	#4	Reported By:	V. Meadows	AFE Amount:	$200,000

Objective: Recomplete in Slide Rock / RTWTP

Current Activity: Swab LW back & POOH w/ tbg and PKR

Details of Past 24 Hrs Operations

Checked SI pressure, less than 20#. Made one swab run while stimulation company RU & laid lines. FL @ 1750. No change in FL. Shut dn and held safety meeting. NU to tbg w/ pump trk. Pumped 35 bbls flush FW. Changed over and started pumping 28% HCL. pumped 12 bbls & started dropping Bio-balls. Pumped a total of 7500 gal HCL. & 45 bbls FW flush. Total of 259 bbls total load. RD MO stimulating company. Shut well in for one hr then started swabbing. Well started flowing after 4 runs. Well stopped flowing and started swabbing well again Swabbed back 80bbls of load. Had a lot of acid gas w/ acid wtr. Had some oil cut at the last couple of swab runs but could not get accuate OC % because of foaming badly and acid gas in sample. SWIFN - Starting pressure on acid job - 4650# w/ pre flush. Well broke over to 3800# after 12 bbls.of KCL. Maintained rate of 5 bbls/ min. Average pressure 3400 bbls. ISIP 1800#, 5 min. 1400#, 10 min. 600#, 15 min. 0#. Well went on a vacume. 151bbls LWTBR.

Daily Well Cost

Description	Day Cost	Cum. Cost	Description	Day Cost	Cum. Cost
Rig Cost:	$5,329	$39,132	Casing:		
Contract Labor:		$700	Tubing:	$991	$6,855
Rental Equipment	$700	$5,830	Wellhead:		
Wireline/Logging:		$11,812	Artificial Lift:		
Dn Hole Tools & Service		$2,609	Scale & H2S Squeeze		
Supervision:			Centrilift Service		$5,312
Stimulation	$26,079	$26,079	BHA (cable, pump, etc)		
Bit & Scraper		$900	Pump Truck & KCL		$1,365
Trucking		$1,440			
Water	$1,730	$4,170			
Hot Oiler					
Paraffin Chem					
			Total Daily Cost:	$34,829	
			Cumulative Well Cost:		$106,204

Citation OIL & GAS CORP.

DAILY WORKOVER REPORT

Field:	Bingham	Well:	10-1	Date:	9/29/2009
Rpt #:	9			AFE #:	090372
Rig #:	#4	Reported By:	V. Meadows	AFE Amount:	$200,000

Objective: Recomplete in Slide Rock / RTWTP

Current Activity:

Details of Past 24 Hrs Operations

Daily Well Cost

Description	Day Cost	Cum. Cost	Description	Day Cost	Cum. Cost
Rig Cost:		$39,132	Casing:		
Contract Labor:		$700	Tubing:		$6,855
Rental Equipment		$5,830	Wellhead:		
Wireline/Logging:		$11,812	Artificial Lift:		
Dn Hole Tools & Service		$2,609	Scale & H2S Squeeze		
Supervision:			Centrilift Service		$5,312
Stimulation		$26,079	BHA (cable, pump, etc)		
Bit & Scraper		$900	Pump Truck & KCL		$1,365
Trucking		$1,440			
Water		$4,170			
Hot Oiler					
Paraffin Chem					
			Total Daily Cost:		
			Cumulative Well Cost:		$106,204

Citation OIL & GAS CORP.

DAILY WORKOVER REPORT

Field:	Bingham	Well:	10-1	Date:	9/30/2009
Rpt #:	10			AFE #:	090372
Rig #:	#4	Reported By:	V. Meadows	AFE Amount:	$200,000

Objective: Recomplete in Slide Rock / RTWTP

Current Activity:

Details of Past 24 Hrs Operations

Daily Well Cost

Description	Day Cost	Cum. Cost	Description	Day Cost	Cum. Cost
Rig Cost:		$39,132	Casing:		
Contract Labor:		$700	Tubing:		$6,855
Rental Equipment		$5,830	Wellhead:		
Wireline/Logging:		$11,812	Artificial Lift:		
Dn Hole Tools & Service		$2,609	Scale & H2S Squeeze		
Supervision:			Centrilift Service		$5,312
Stimulation		$26,079	BHA (cable, pump, etc)		
Bit & Scraper		$900	Pump Truck & KCL		$1,365
Trucking		$1,440			
Water		$4,170			
Hot Oiler					
Paraffin Chem					
			Total Daily Cost:		
			Cumulative Well Cost:		$106,204

Citation OIL & GAS CORP.

DAILY WORKOVER REPORT

Field:	Bingham	Well:	10-1	Date:	10/1/2009
Rpt #:	11			AFE #:	090372
Rig #:	#4	Reported By:	V. Meadows	AFE Amount:	$200,000

Objective: Recomplete in Slide Rock / RTWTP

Current Activity:

Details of Past 24 Hrs Operations

Daily Well Cost

Description	Day Cost	Cum. Cost	Description	Day Cost	Cum. Cost
Rig Cost:		$39,132	Casing:		
Contract Labor:		$700	Tubing:		$6,855
Rental Equipment		$5,830	Wellhead:		
Wireline/Logging:		$11,812	Artificial Lift:		
Dn Hole Tools & Service		$2,609	Scale & H2S Squeeze		
Supervision:			Centrilift Service		$5,312
Stimulation		$26,079	BHA (cable, pump, etc)		
Bit & Scraper		#VALUE!	Pump Truck & KCL		$1,365
Trucking		$1,440			
Water		$4,170			
Hot Oiler					
Paraffin Chem					
			Total Daily Cost:		
			Cumulative Well Cost:		$106,204

A TRUE AND CORRECT COPY OF THE APPLICATION TO CONVERT TO INJECTION THE BINGHAM 10-1 WELL LOCATED IN THE PINEVIEW FIELD, SUMMIT COUNTY, UTAH WAS PLACED IN THE U. S. MAIL, ALL POSTAGE PRE-PAID AND PROPERLY ADDRESSED AS FOLLOWS, TO THE LIST OF SURFACE OWNERS AND OFFSET OPERATORS WITHIN THE ONE-HALF MILE AREA OF REVIEW AS SHOWN BELOW, ON THIS THE 21ST DAY OF January 2010.

I, Bridget Lisenbe, being first duly sworn upon oath, state, that I am the applicant or agent of the above applicant. I certify that on the 21st day of January, 2010 I mailed a copy of the application to the respondents named below at their respective mailing addresses:

Bridget Lisenbe

SURFACE OWNER – (1/2 mile radius):

Section 2, T2N-R7E (ALL)
Section 10, T2N-R7E (ALL)
Section 11, T2N-R7E (ALL)
Section 3, T2N-R7E (SE)

B. A. Bingham & Sons, LLC
3523 W 8000 N
Honeyville, UT 84314

Section 3, T2N-R7E (SW)

Margaret Louise Bowman
3625 E. Chalk Creek Rd.
Coalville, UT 84017

OFFSET OPERATORS (1/2 mile radius):

XTO Energy Inc.
810 Houston St.
Fort Worth, TX 76102

Eland Energy, Inc.
8150 North Central Expressway,
Suite 400
Dallas, TX 75206

Eland Energy, Inc.
13455 Noel Rd.
Two Galleria Tower, Suite 2000
Dallas, TX 75240

Lochinvar Energy, LP
203 East Interstate 30, Suite 200
Rockwall, TX 75087

Dominion Oklahoma Texas
Exploration & Production, Inc.
14000 Quail Springs Parkway,
Suite 600
Oklahoma City, OK 73134-2600

Ancon Partnership Ltd.
1331 Lamar, Suite 900
Houston, TX 77010-3088

RECEIVED
FEB 08 2010
DIV. OF OIL, GAS & MINING

Concise Oil and Gas Partnership
4582 South Ulster Street Parkway,
Suite 1700
Denver, CO 80237

Equity Oil Company
600 17th St., Suite 2110-S
Denver, CO 80202

Equity Oil Company
C/O Whiting Petroleum Corp.
1700 Broadway, Suite 2300
Denver, CO 80290-2300

The Prospective Investment and Trading Company, Ltd., Pitco Investment, Ltd., Jag Oil Limited Partnership, AS IS Investments, LLC, & High Hopes Oil Company, LLC
P. O. Box 4190
Scottsdale, AZ 85261

Jag Oil Limited Partnership
P. O. Box 700630
Tulsa, OK 74170-0630

Wagner Oil Company
500 Commerce St., Suite 600
Fort Worth, TX 76102

American Exploration Company
1331 Lamar, Suite 900
Houston, TX 77010-3088

Conquest Exploration Company
4201 FM 1960 West, Suite 500
Houston, TX 77068

Conquest Exploration Company
P. O. Box 297166
Houston, TX 77297-0166

Exxon Mobil Corporation
5959 Las Colinas Blvd.
Irving, TX 75039-4202

BP America Inc.
501 Westlake Park Blvd.
Houston, TX 77079-2604

Anadarko Petroleum Corporation
P. O. Box 1330
Houston, TX 77251-1330

Subscribed and sworn to before me this 4th day of February 2010

SHARON L WARD
NOTARY PUBLIC
STATE OF TEXAS
EXPIRES
11-28-2011

Sharon L Ward
NOTARY PUBLIC

My Commission Expires: 11-28-2011

GARY R. HERBERT
Governor

GREGORY S. BELL
Lieutenant Governor

State of Utah

DEPARTMENT OF NATURAL RESOURCES

MICHAEL R. STYLER
Executive Director

Division of Oil, Gas and Mining

JOHN R. BAZA
Division Director

April 7, 2010

Ms. Bridget Lisenbe
Citation Oil & Gas Corp.
P O Box 690688
Houston, TX 77269

Subject: Pineview Field Well: Bingham 10-1, Section 10, Township 2 North, Range 7 East, SLBM, Summit County, Utah

Dear Ms. Lisenbe:

Pursuant to Utah Admin. Code R649-5-3-3, the Division of Oil, Gas and Mining (the "Division") issues its administrative approval for conversion of the referenced well to a Class II injection well. Accordingly, the following stipulations shall apply for full compliance with this approval:

1. Compliance with all applicable requirements for the operation, maintenance and reporting for Underground Injection Control ("UIC") Class II injection wells pursuant to Utah Admin. Code R649-1 et seq.

2. Conformance with all conditions and requirements of the complete application submitted by Citation Oil & Gas Corp.

3. A casing\tubing pressure test shall be conducted prior to commencing injection.

4. Pressure shall be monitored between the surface casing and the production casing on a regular basis. Any pressure changes observed shall be reported to the Division immediately.

5. Injection shall be restricted to the Nugget Sandstone. A water sample is needed from the proposed injection interval in the Nugget Sandstone in the Bingham 10-1 SWD well. At that time it will be necessary to establish compatibility between the water sample from the proposed injection interval and samples of the proposed injection fluids.

6. It will be required to run a radioactive tracer survey (RATS) through and above the proposed water injection interval to determine if there is suitable cement bond to prevent migration of injected fluids upward around the well casing.

7. A step-rate test will be required during recompletion in order to determine the fracture parting pressure through the proposed injection interval.

A final approval to commence injection will be issued upon satisfactory completion of the listed stipulations. If you have any questions regarding this approval or the necessary requirements, please contact Mark Reinbold at 801-538-5333 or Brad Hill at 801-538-5315.

Sincerely,

Gil Hunt
Associate Director

GLH/MLR/js
cc: Bruce Suchomel, Environmental Protection Agency
Summit County
Well File

N:\O&G Reviewed Docs\ChronFile\UIC\Citation Oil Corp

STATE OF UTAH
DIVISION OF OIL, GAS AND MINING
INJECTION WELL INSPECTION RECORD

Operator: Citation Oil & Gas API: 43-043-30025

Well Name: Bingham 10-1 Field: Pineview

Sec/Twp/Rng: NW/NE Sec.10, T2N, R7E

County: Summit Co.

Type of Inspection: Routine (MIT) Workover Conversion Plugging

Injection Type:

Disposal: X Enhanced Recovery: _____ Other: _____

Injecting: _____ Shut-In: _____

Rate: _____(bpd) Totalizer: _____(bbls)

Gauges: Tubing _____
Casing _____ Casing Pressure: 1020 (psig)

Tubing Pressure: _____(psig) Housekeeping: _____

Equipment Condition: _____

Remarks: Loaded BS and pressured up to 1020# for 30min - held good.

Inspector: Mark Reinbold Date: 7-21-2010
Time: 9:10 - 9:40 am

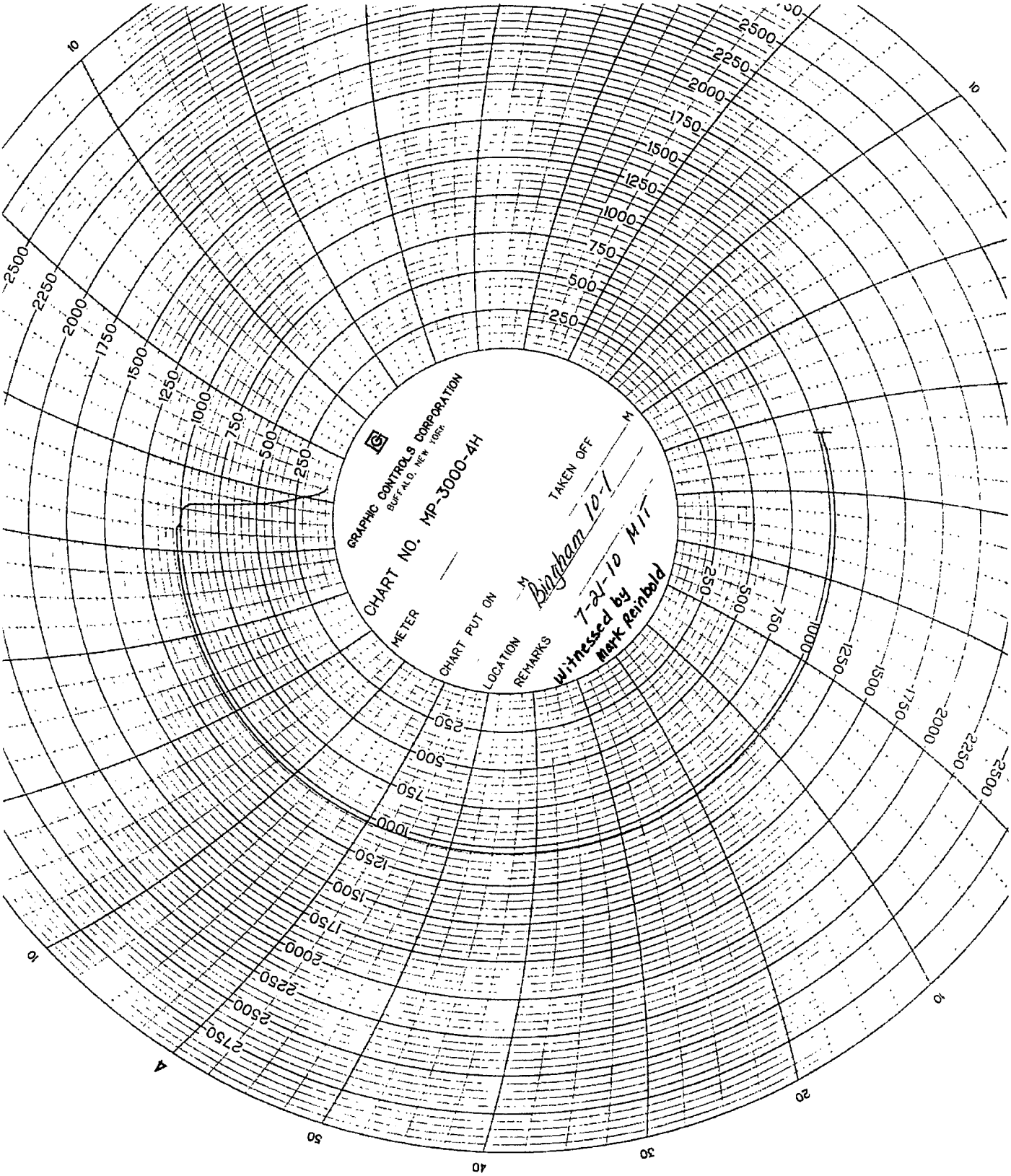
GRAPHIC CONTROLS CORPORATION
BUFFALO, NEW YORK
CHART NO. MP-3000-4H
METER
CHART PUT ON
TAKEN OFF
LOCATION
Bingham 10-1
REMARKS
7-21-10 MIT
Witnessed by
Mark Reinbold

From: Armando Lopez-Rocha <ALopez-Rocha@cogc.com>
To: Mark Reinbold <markreinbold@utah.gov>
CC: Bridget Lisenbe <BLisenbe@cogc.com>, Mark Bing <MBing@cogc.com>, SusanJa...
Date: 7/27/2010 10:55 AM
Subject: Bimgham 10-1 - Step-Rate-Test, RATS Survey, Water Compatibility Test, and MIT Test
Attachments: Bingham 10-1 - Step Rate Test 7-23-10.pdf; Bingham 10-1 - Tracer Log 7-21-10.PDF; Bingham 10-1 - Water Compatibility Test.pdf; Bingham 10-1 - MIT Press Chart.pdf; Bingham 10-1 - Approval Letter.pdf

Mark Reinbold,

As per the approval letter dated April 17, 2010 in reference to the Bingham 10-1 SWD conversion, please find attached the following requested documents:

1- MIT Pressure Chart

2- Water Compatibility Test

3- RATS Survey (Tracer Log)

4- Step-Rate-Test

Let me know should you have any questions or concerns.

Regards,

Armando Lopez
Production Engineer
Central Region
Citation Oil & Gas Corp.
281.387.0311 (Cell)
281.891.1484 (Office)

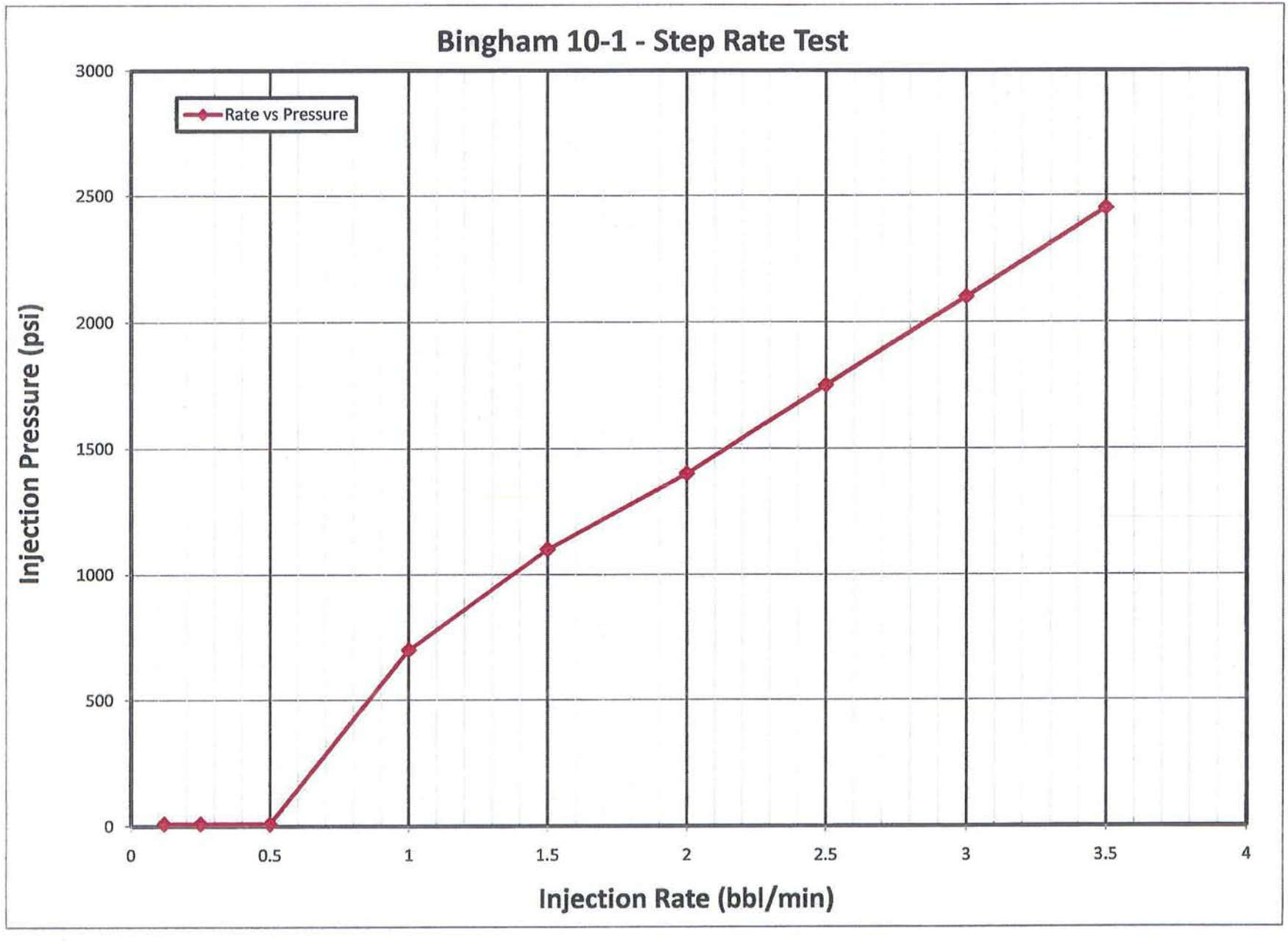
Bingham 10-1 - Step Rate Test
Rate vs Pressure
Injection Pressure (psi)
3000
2500
2000
1500
1000
500
0
0
0.5
1
1.5
2
2.5
3
3.5
4
Injection Rate (bbl/min)

Bingham 10-1 - STEP RATE TEST

7/23/2010

STEP	Time	Injection Rate	Injection Pressure	Minutes	% of Max Rate	Comments
Step 1	12:05:00	0.12	10	Start	5%	
Step 2	12:35:00	0.25	10	0:30:00	10%	
Step 3	13:05:00	0.5	10	0:30:00	20%	
Step 4	13:35:00	1	700	0:30:00	40%	
Step 5	14:05:00	1.5	1100	0:30:00	60%	
Step 6	14:35:00	2	1400	0:30:00	80%	
Step 7	15:05:00	2.5	1750	0:30:00	100%	Established Maximum Rate
Step 8	15:35:00	3	2100	0:30:00	120%	Added 30 min stage to determine inj pressures
Step 9	16:05:00	3.5	2450	0:30:00	140%	Added 30 min stage to determine inj pressures
ISIP			On Vac			

CUDD ENERGY SERVICES

JOB DETAIL REPORT – Nitrogen / Fluid Pump

ESO #: _____ Page 1 of 1

Customer: Citation			Date: 7/23/2010
Well Name: Brinkhum	Well No.: 10-1		Unit No.: 517
Safety Meeting Topic: PPE, Acid, Pressurized Fluids.			

Tree Size:	Tubing PSI:	Casing/Liner PSI:	Perforations:
Tubing Size: 2 7/8, 2 3/8	Casing/Liner Size:	Packer Depth:	Total Depth:

Time Log	Pump Pressure	Rate BBL/SCF	Well head Pressure	Detailed Work Description and Data
0700				Arrive on location, JSA
0730				Rig Up
0900				Prime pump, Function test Pump
0922	50	1		Open Well start pumping 8½ fluids
0929	700	—		Stop Pumping 7.5 BBL
0930	1450	1		Start Pumping
0946	—	—		Stop Pumping 22.5 BBL
0949	1450	1		Start Pumping 15% HCL Acid pumped 35.7 BBL
1024	1850	1		Switch to Water
1040	—	—		Stop Pumping 15 BBL Flush
1120	75	.2		Start Pumping Water
1136	1300	1.5		Increase Rate
1147	1700	2		Increase Rate
1156	—	—		Stop pumping
1205	10	.12		Start pumping
1235	10	.25		Increase Rate
1305	10	.5		" "
1335	700	1		" "
1405	1100	1.5		" "
1435	1400	2		" "
1505	1750	2.5		" "
1535	2100	3		" "
1605	2450	3.5		" "
1630	700	1.5		Reduce Rate
1639	200	1		Reduce Rate
1447				Stop pumping out of Water
1450				Shut in Well, Rig Down
1530				Leave location

CUDD ENERGY SERVICES
1382 East Highway 40
Vernal, UT 84078
www.cudd.com

DERIK WINKLER
Coil Tubing Coordinator
435-789-0757 Office
307-371-9385 Mobile
435-789-1239 Fax
dwinkler@cudd.com
VRPC

SAFETY PAYS IN EVERY WAY

Final Inspection and Test:	Cust. Representative:	CPCI By:

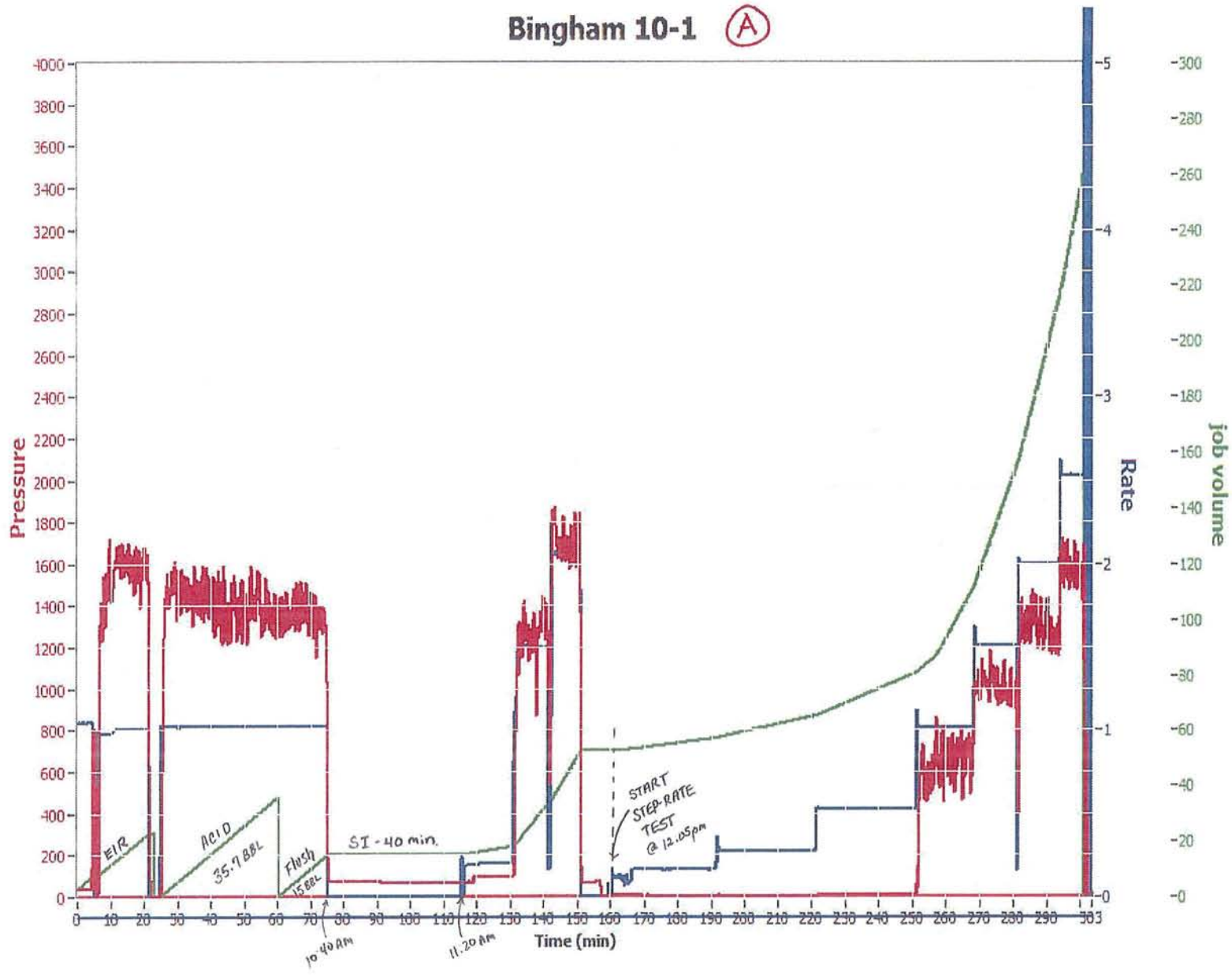
Bingham 10-1
A
Pressure
Rate
job volume
Time (min)
EIR
ACID
35.7 BBL
Flush
15 BBL
SI - 40 min.
START
STEP-RATE
TEST
@ 12:05pm
10:40 AM
11:20 AM

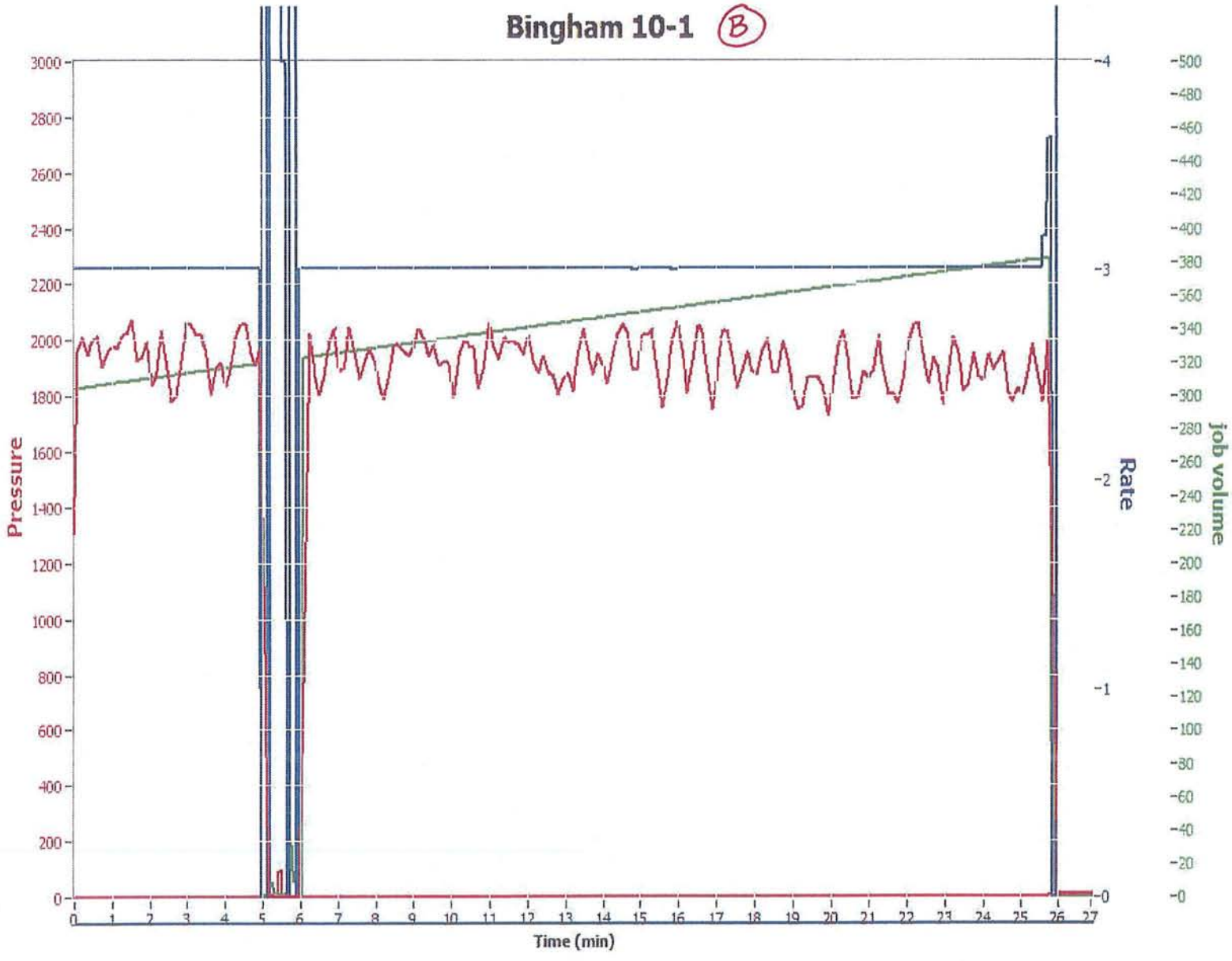
Bingham 10-1
B
Pressure
Rate
job volume
Time (min)

Bingham 10-1 (C)

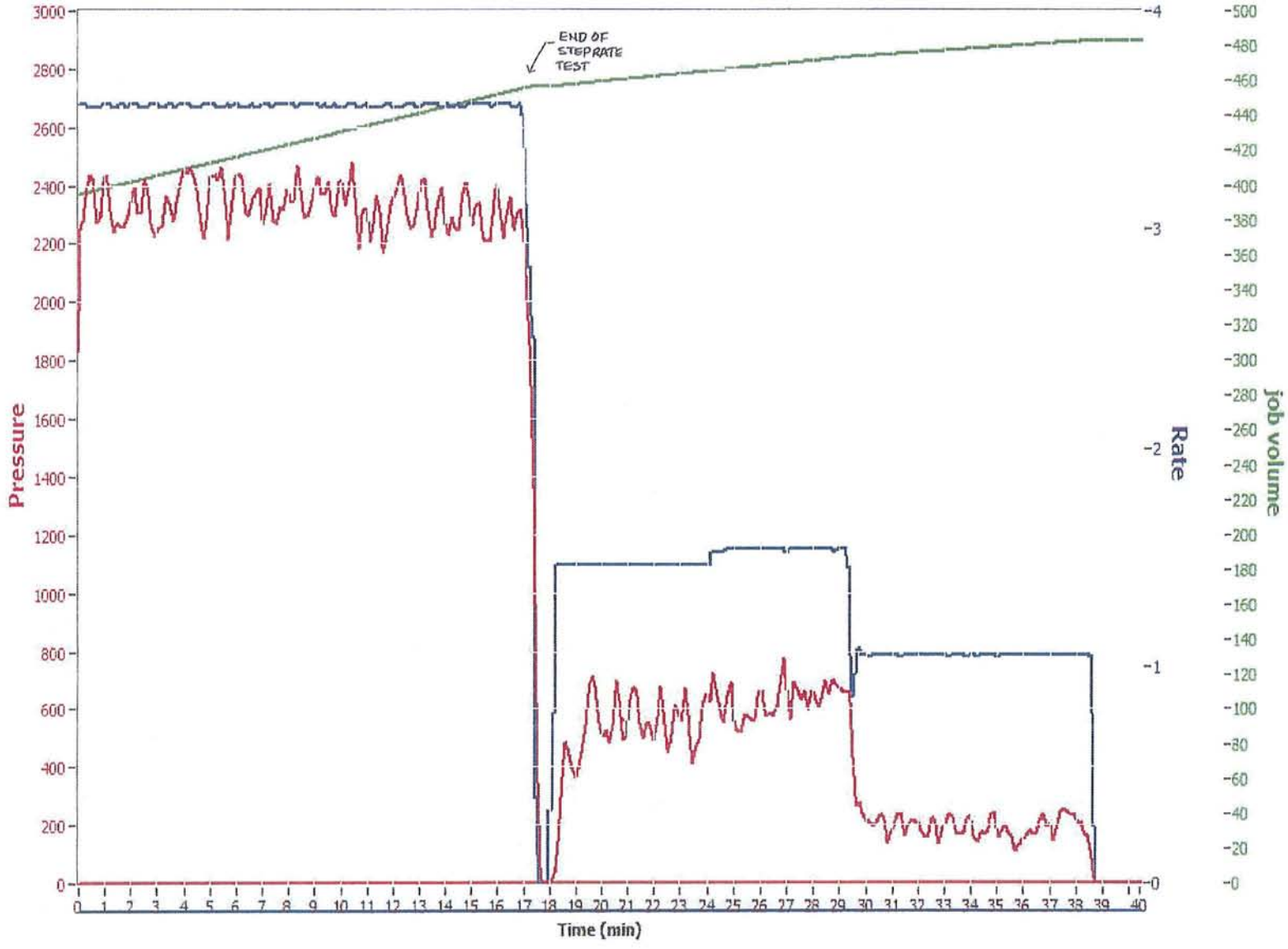

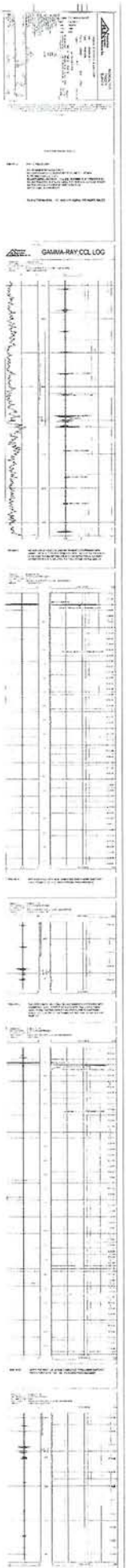

See log files

Champion Technologies

Saturation Index Calculations Based on CO_2 Content in Water

(BASED ON TOMSON-ODDO MODEL)

Citation Oil & Gas Corp.

Pineview, Bingham

	Sample Date	Comments
BRINE 1: Pineview, Bingham 10-1	May -1-09	Sample in Well Head
BRINE 2: Pineview, Bingham #1 injection well	May -1-09	Sample from Injector

Component		Brines		Mixing Ratio as %										
		BRINE 1		5	10	20	30	40	50	60	70	80	90	95
			BRINE 2	95	90	80	70	60	50	40	30	20	10	5
Calcium, Ca^{+2}	mg/l	945	997	994	992	987	981	976	971	966	961	955	950	948
Magnesium, Mg^{+2}	mg/l	13	2	3	3	4	5	6	8	9	10	11	12	12
Barium, Ba^{+2}	mg/l	0	0	0	0	0	0	0	0	0	0	0	0	0
Strontium, Sr^{+2}	mg/l	0	0	0	0	0	0	0	0	0	0	0	0	0
Carbonate, CO_3^{-2}	mg/l	0	0	0	0	0	0	0	0	0	0	0	0	0
Bicarbonate, HCO_3^{-1}	mg/l	941	1,050	1,045	1,039	1,028	1,017	1,006	996	985	974	963	952	946
Sulfate, SO_4^{-2}	mg/l	38	63	62	61	58	56	53	51	48	46	43	41	39
Chloride, Cl_2	mg/l	19,840	22,740	22,595	22,450	22,160	21,870	21,580	21,290	21,000	20,710	20,420	20,130	19,985
CO_2 in Brine	mg/l	5	40	38	37	33	30	26	23	19	16	12	9	7
Ionic Strength		0.60	0.69	0.68	0.68	0.67	0.66	0.65	0.64	0.63	0.63	0.62	0.61	0.60
Temperature	°F	85	85	85	85	85	85	85	85	85	85	85	85	85
Pressure	psia	100	100	100	100	100	100	100	100	100	100	100	100	100
Tomson-Oddo Saturation Index														
Calcite; $CaCO_3$		1.29	0.44	0.46	0.48	0.51	0.56	0.61	0.67	0.74	0.81	0.92	1.07	1.17
Gypsum; $CaSO_4$-$2H_2O$		N/A	N/A	N/A	N/A	N/A	N/A	N/A	N/A	N/A	N/A	N/A	N/A	N/A
Hemihydrate; $CaSO_4$-$1/2H_2O$		N/A	N/A	N/A	N/A	N/A	N/A	N/A	N/A	N/A	N/A	N/A	N/A	N/A
Anhydrite; $CaSO_4$		N/A	N/A	N/A	N/A	N/A	N/A	N/A	N/A	N/A	N/A	N/A	N/A	N/A
Barite; $BaSO_4$		N/A	N/A	N/A	N/A	N/A	N/A	N/A	N/A	N/A	N/A	N/A	N/A	N/A
Celestite; $SrSO_4$		N/A	N/A	N/A	N/A	N/A	N/A	N/A	N/A	N/A	N/A	N/A	N/A	N/A
P(Pounds Per)T(Thousand)B(Barrels)														
Calcite; $CaCO_3$		374.7	190.7	197.0	203.3	212.3	227.9	240.1	255.4	272.2	288.7	310.0	339.2	356.7
Gypsum; $CaSO_4$-$2H_2O$		N/A	N/A	N/A	N/A	N/A	N/A	N/A	N/A	N/A	N/A	N/A	N/A	N/A
Hemihydrate; $CaSO_4$-$1/2H_2O$		N/A	N/A	N/A	N/A	N/A	N/A	N/A	N/A	N/A	N/A	N/A	N/A	N/A
Anhydrite; $CaSO_4$		N/A	N/A	N/A	N/A	N/A	N/A	N/A	N/A	N/A	N/A	N/A	N/A	N/A
Barite; $BaSO_4$		N/A	N/A	N/A	N/A	N/A	N/A	N/A	N/A	N/A	N/A	N/A	N/A	N/A
Celestite; $SrSO_4$		N/A	N/A	N/A	N/A	N/A	N/A	N/A	N/A	N/A	N/A	N/A	N/A	N/A

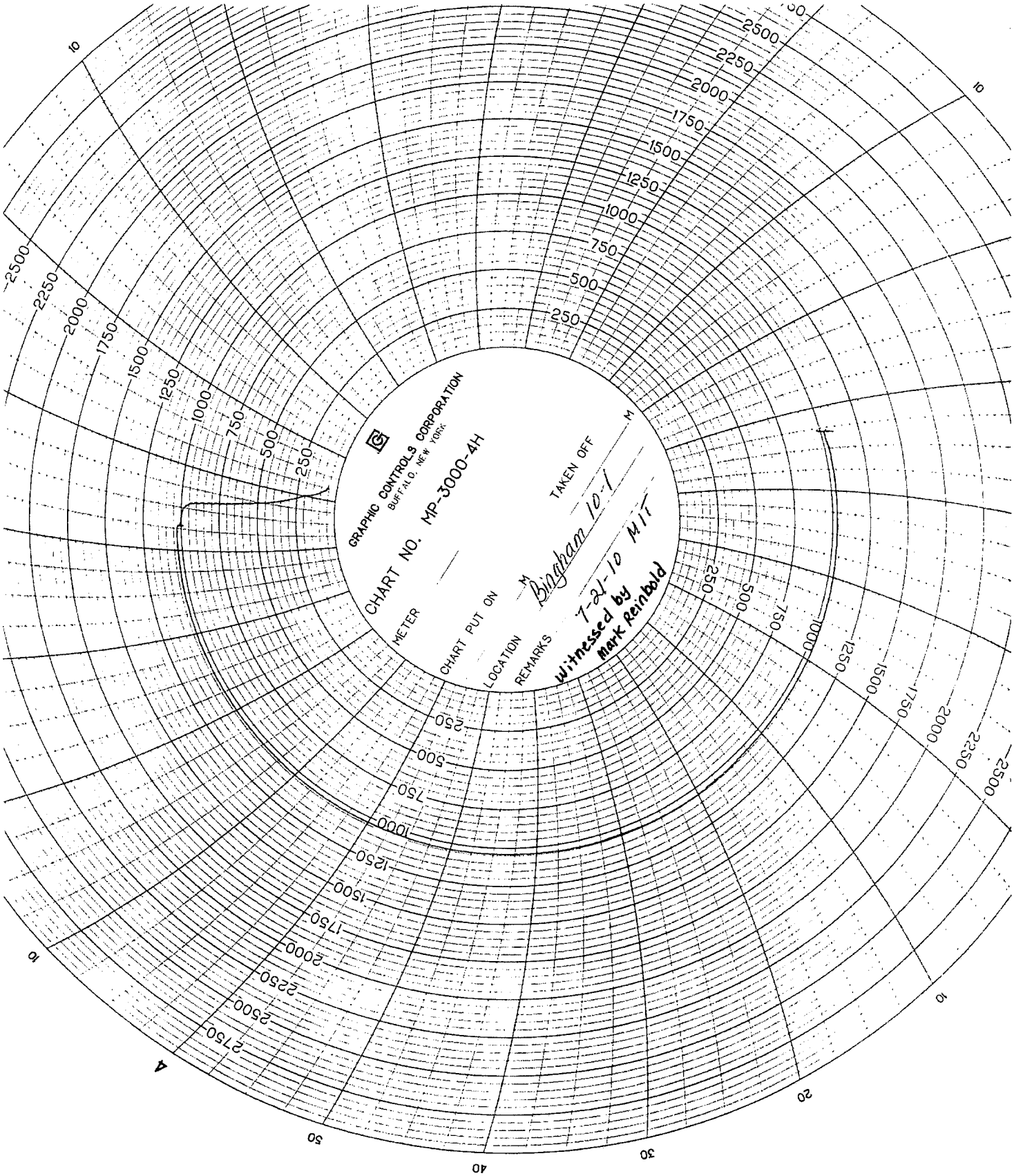
GRAPHIC CONTROLS CORPORATION
BUFFALO, NEW YORK
CHART NO. MP-3000-4H
METER
CHART PUT ON
TAKEN OFF
LOCATION
REMARKS
Bingham 10-1
7-21-10 MIT
witnessed by
Mark Reinbold

GARY R. HERBERT
Governor

GREGORY S. BELL
Lieutenant Governor

State of Utah

DEPARTMENT OF NATURAL RESOURCES

MICHAEL R. STYLER
Executive Director

Division of Oil, Gas and Mining

JOHN R. BAZA
Division Director

April 7, 2010

Ms. Bridget Lisenbe
Citation Oil & Gas Corp.
P O Box 690688
Houston, TX 77269

Subject: Pineview Field Well: Bingham 10-1, Section 10, Township 2 North, Range 7 East, SLBM, Summit County, Utah

Dear Ms. Lisenbe:

Pursuant to Utah Admin. Code R649-5-3-3, the Division of Oil, Gas and Mining (the "Division") issues its administrative approval for conversion of the referenced well to a Class II injection well. Accordingly, the following stipulations shall apply for full compliance with this approval:

1. Compliance with all applicable requirements for the operation, maintenance and reporting for Underground Injection Control ("UIC") Class II injection wells pursuant to Utah Admin. Code R649-1 et seq.

2. Conformance with all conditions and requirements of the complete application submitted by Citation Oil & Gas Corp.

3. A casing\tubing pressure test shall be conducted prior to commencing injection.

4. Pressure shall be monitored between the surface casing and the production casing on a regular basis. Any pressure changes observed shall be reported to the Division immediately.

5. Injection shall be restricted to the Nugget Sandstone. A water sample is needed from the proposed injection interval in the Nugget Sandstone in the Bingham 10-1 SWD well. At that time it will be necessary to establish compatibility between the water sample from the proposed injection interval and samples of the proposed injection fluids.

6. It will be required to run a radioactive tracer survey (RATS) through and above the proposed water injection interval to determine if there is suitable cement bond to prevent migration of injected fluids upward around the well casing.

7. A step-rate test will be required during recompletion in order to determine the fracture parting pressure through the proposed injection interval.

A final approval to commence injection will be issued upon satisfactory completion of the listed stipulations. If you have any questions regarding this approval or the necessary requirements, please contact Mark Reinbold at 801-538-5333 or Brad Hill at 801-538-5315.

Sincerely,

Gil Hunt
Associate Director

GLH/MLR/js
cc: Bruce Suchomel, Environmental Protection Agency
Summit County
Well File

N:\O&G Reviewed Docs\ChronFile\UIC\Citation Oil Corp

Mark Reinbold - RE: Bimgham 10-1 - Step-Rate-Test, RATS Survey, Water Compatibility Test, and MIT Test

From: Armando Lopez-Rocha <ALopez-Rocha@cogc.com>
To: Mark Reinbold <markreinbold@utah.gov>
Date: 8/3/2010 8:50 AM
Subject: RE: Bimgham 10-1 - Step-Rate-Test, RATS Survey, Water Compatibility Test, and MIT Test
CC: Bridget Lisenbe <BLisenbe@cogc.com>

Mark,

As per our last conversation, below are a few comments on the RATS Survey and the Step-Rate-Test:

Step-Rate-Test

1.) The Step-Rate-Test was taken at intervals of 30 minutes. The interpreted graph showing pressure/rate-vs-time did not show full 30-minute intervals due to technical problems encountered during the job between the computer and the pump. For some unknown reason, the program was not reading the full 30 minutes towards the end of the job. However, I personally witnessed the 30-minute intervals as each step was being timed with a watch. As a result, two additional steps were added at 3 and 3.5 BPM to show two extra data points with the correct elapsed time but unfortunately the program started to misread the time again during the last stage. If you have any other concerns about the step-rate-test, feel free to call CUDD's Supervisor, Derik Winkler, at 307-371-9385. Mr. Winkler was present at the wellsite supervising the Step-Rate-Test and could comment further on the recorded pressure and rates, if necessary.

2.) Note that a pressure breakdown was unapparent on the Pressure vs Rate graph due to the fact that the pressures were under the pressure necessary to fracture the Nugget formation.

The Fracture gradient at Pineview is calculated at 0.86 psi/ft based on the Bingham 2-1A Nugget frac and Bingham 2-3 Nugget acid jobs. Therefore, the fracture pressure for the Nugget Formation at a mid perf depth of 9879' in the Bingham 10-1 is **8495.9 psi**.

During the Step-Rate-Test, the maximum Injection Pressure and Rate were 3.5 BPM and ~ 2500 psi, respectively. At this rate the pressure at the formation was calculated as follows:
= (Surface Injection Pressure) + (Hydrostatic Pressure) – (Friction Pressure)
= (2500 psi) + (.433 psi/ft) (1.0325) (9879') – (1100 psi)
= **5816.6 psi**

Therefore, the injection surface pressure of 2500 psi is 2679.3 psi below the pressure necessary to fracture the Nugget Formation of 8495.94 psi and thus the reason why a pressure breakdown was not noticed during the Step-Rate-Test.
= 8495.9 psi – 5816.6 psi = **2679.3 psi**

RATS Survey

1) The RATS Survey did not show a "chase" due to an unnoticed returned gamma kick a few minutes after the R/A slugs were introduced in the wellbore (indicating communication or a leak). As you can see, the only high gamma measurement was noticed as the R/A slug passed

through the Gamma-Ray detector. Keep in mind that water was being pumped down the tubing at 1-1.5 BPM as the RATS survey was being performed.

Please let me know should you have any other questions or concerns.

Regards,

Armando Lopez
Production Engineer
Central Region
Citation Oil & Gas Corp.
281.387.0311 (Cell)
281.891.1484 (Office)

From: Armando Lopez-Rocha
Sent: Tuesday, July 27, 2010 11:54 AM
To: 'Mark Reinbold'
Cc: Bridget Lisenbe; Mark Bing; Susan James; Kristopher Johnson; Josh Kull
Subject: Bimgham 10-1 - Step-Rate-Test, RATS Survey, Water Compatibility Test, and MIT Test

Mark Reinbold,

As per the approval letter dated April 17, 2010 in reference to the Bingham 10-1 SWD conversion, please find attached the following requested documents:

1- MIT Pressure Chart
2- Water Compatibility Test
3- RATS Survey (Tracer Log)
4- Step-Rate-Test

Let me know should you have any questions or concerns.

Regards,

Armando Lopez
Production Engineer
Central Region
Citation Oil & Gas Corp.
281.387.0311 (Cell)
281.891.1484 (Office)

Champion Technologies

Saturation Index Calculations Based on CO_2 Content in Water

(BASED ON TOMSON-ODDO MODEL)

Citation Oil & Gas Corp.

Pineview, Bingham

	Sample Date	Comments
BRINE 1: Pineview, Bingham 10-1	May -1-09	Sample in Well Head
BRINE 2: Pineview, Bingham #1 injection well	May -1-09	Sample from Injector

Component		Brines		Mixing Ratio as %										
		BRINE 1		5	10	20	30	40	50	60	70	80	90	95
			BRINE 2	95	90	80	70	60	50	40	30	20	10	5
Calcium, Ca^{+2}	mg/l	945	997	994	992	987	981	976	971	966	961	955	950	948
Magnesium, Mg^{+2}	mg/l	13	2	3	3	4	5	6	8	9	10	11	12	12
Barium, Ba^{+2}	mg/l	0	0	0	0	0	0	0	0	0	0	0	0	0
Strontium, Sr^{+2}	mg/l	0	0	0	0	0	0	0	0	0	0	0	0	0
Carbonate, CO_3^{-2}	mg/l	0	0	0	0	0	0	0	0	0	0	0	0	0
Bicarbonate, HCO_3^{-1}	mg/l	941	1,050	1,045	1,039	1,028	1,017	1,006	996	985	974	963	952	946
Sulfate, SO_4^{-2}	mg/l	38	63	62	61	58	56	53	51	48	46	43	41	39
Chloride, Cl_2	mg/l	19,840	22,740	22,595	22,450	22,160	21,870	21,580	21,290	21,000	20,710	20,420	20,130	19,985
CO_2 in Brine	mg/l	5	40	38	37	33	30	26	23	19	16	12	9	7
Ionic Strength		0.60	0.69	0.68	0.68	0.67	0.66	0.65	0.64	0.63	0.63	0.62	0.61	0.60
Temperature	°F	85	85	85	85	85	85	85	85	85	85	85	85	85
Pressure	psia	100	100	100	100	100	100	100	100	100	100	100	100	100
Tomson-Oddo Saturation Index														
Calcite; $CaCO_3$		1.29	0.44	0.46	0.48	0.51	0.56	0.61	0.67	0.74	0.81	0.92	1.07	1.17
Gypsum; $CaSO_4$-$2H_2O$		N/A	N/A	N/A	N/A	N/A	N/A	N/A	N/A	N/A	N/A	N/A	N/A	N/A
Hemihydrate; $CaSO_4$-$1/2H_2O$		N/A	N/A	N/A	N/A	N/A	N/A	N/A	N/A	N/A	N/A	N/A	N/A	N/A
Anhydrite; $CaSO_4$		N/A	N/A	N/A	N/A	N/A	N/A	N/A	N/A	N/A	N/A	N/A	N/A	N/A
Barite; $BaSO_4$		N/A	N/A	N/A	N/A	N/A	N/A	N/A	N/A	N/A	N/A	N/A	N/A	N/A
Celestite; $SrSO_4$		N/A	N/A	N/A	N/A	N/A	N/A	N/A	N/A	N/A	N/A	N/A	N/A	N/A
P(Pounds Per)T(Thousand)B(Barrels)														
Calcite; $CaCO_3$		374.7	190.7	197.0	203.3	212.3	227.9	240.1	255.4	272.2	288.7	310.0	339.2	356.7
Gypsum; $CaSO_4$-$2H_2O$		N/A	N/A	N/A	N/A	N/A	N/A	N/A	N/A	N/A	N/A	N/A	N/A	N/A
Hemihydrate; $CaSO_4$-$1/2H_2O$		N/A	N/A	N/A	N/A	N/A	N/A	N/A	N/A	N/A	N/A	N/A	N/A	N/A
Anhydrite; $CaSO_4$		N/A	N/A	N/A	N/A	N/A	N/A	N/A	N/A	N/A	N/A	N/A	N/A	N/A
Barite; $BaSO_4$		N/A	N/A	N/A	N/A	N/A	N/A	N/A	N/A	N/A	N/A	N/A	N/A	N/A
Celestite; $SrSO_4$		N/A	N/A	N/A	N/A	N/A	N/A	N/A	N/A	N/A	N/A	N/A	N/A	N/A

Bingham 10-1 - STEP RATE TEST 7/23/2010

STEP	Time	Injection Rate	Injection Pressure	Minutes	% of Max Rate	Comments
Step 1	12:05:00	0.12	10	Start	5%	
Step 2	12:35:00	0.25	10	0:30:00	10%	
Step 3	13:05:00	0.5	10	0:30:00	20%	
Step 4	13:35:00	1	700	0:30:00	40%	
Step 5	14:05:00	1.5	1100	0:30:00	60%	
Step 6	14:35:00	2	1400	0:30:00	80%	
Step 7	15:05:00	2.5	1750	0:30:00	100%	Established Maximum Rate
Step 8	15:35:00	3	2100	0:30:00	120%	Added 30 min stage to determine inj pressures
Step 9	16:05:00	3.5	2450	0:30:00	140%	Added 30 min stage to determine inj pressures
ISIP			On Vac			

CUDD ENERGY SERVICES

JOB DETAIL REPORT – Nitrogen / Fluid Pump

ESO #: _____ Page 1 of 1

Customer: Citation			Date: 7/23/2010
Well Name: Brinkham	Well No.: 10-1		Unit No.: 517
Safety Meeting Topic: DPL Acid, Energized Fluids.			

Tree Size:	Tubing PSI:	Casing/Liner PSI:	Perforations:
Tubing Size: 2 7/8, 2 3/8	Casing/Liner Size:	Packer Depth:	Total Depth:

Time Log	Pump Pressure	Rate BBL/SCF	Well head Pressure	Detailed Work Description and Data
0700				Arrive on location, JSA
0730				Rig Up
0900				Prime Pump, Function test Pump
0922	50	1		Open Well start pumping 8½ Turds
0929	700	—		Stop Pumping 7.5 BBL
0930	1850	1		Start Pumping
0944	—	—		Stop Pumping 22.5 BBL
0949	1450	1		Start Pumping 15% HCL Acid pumped 35.7 BBL
1024	1850	1		Switch to Water
1040	—	—		Stop Pumping 15 BBL Flush
1120	75	.2		Start Pumping Water
1126	1300	1.5		Increase Rate
1147	1700	2		Increase Rate
1156	—	—		Stop pumping
1205	10	.12		Start pumping
1235	10	.25		Increase Rate
1305	10	.5		" "
1335	700	1		" "
1405	1100	1.5		" "
1435	1400	2		" "
1505	1750	2.5		" "
1535	2100	3		" "
1605	2450	3.5		" "
1630	700	1.5		Reduce Rate
				~~Stop Pumping 200 Bad Water~~
1639	200	1		Reduce Rate
1647				Stop pumping out of Water
1450				Shut in Well, Rig Down
1530				Leave location

CUDD ENERGY SERVICES
1382 East Highway 40
Vernal, UT 84078
www.cudd.com

DERIK WINKLER
Coil Tubing Coordinator
435-789-0757 Office
307-371-9385 Mobile
435-789-1239 Fax
dwinkler@cudd.com
IRPC

SAFETY PAYS IN EVERY WAY

Final Inspection and Test:	Cust. Representative:	CPCI By:

Rev 0: 07/15/98
Form D2011

Original White-Billing Yellow-District Pink-Customer

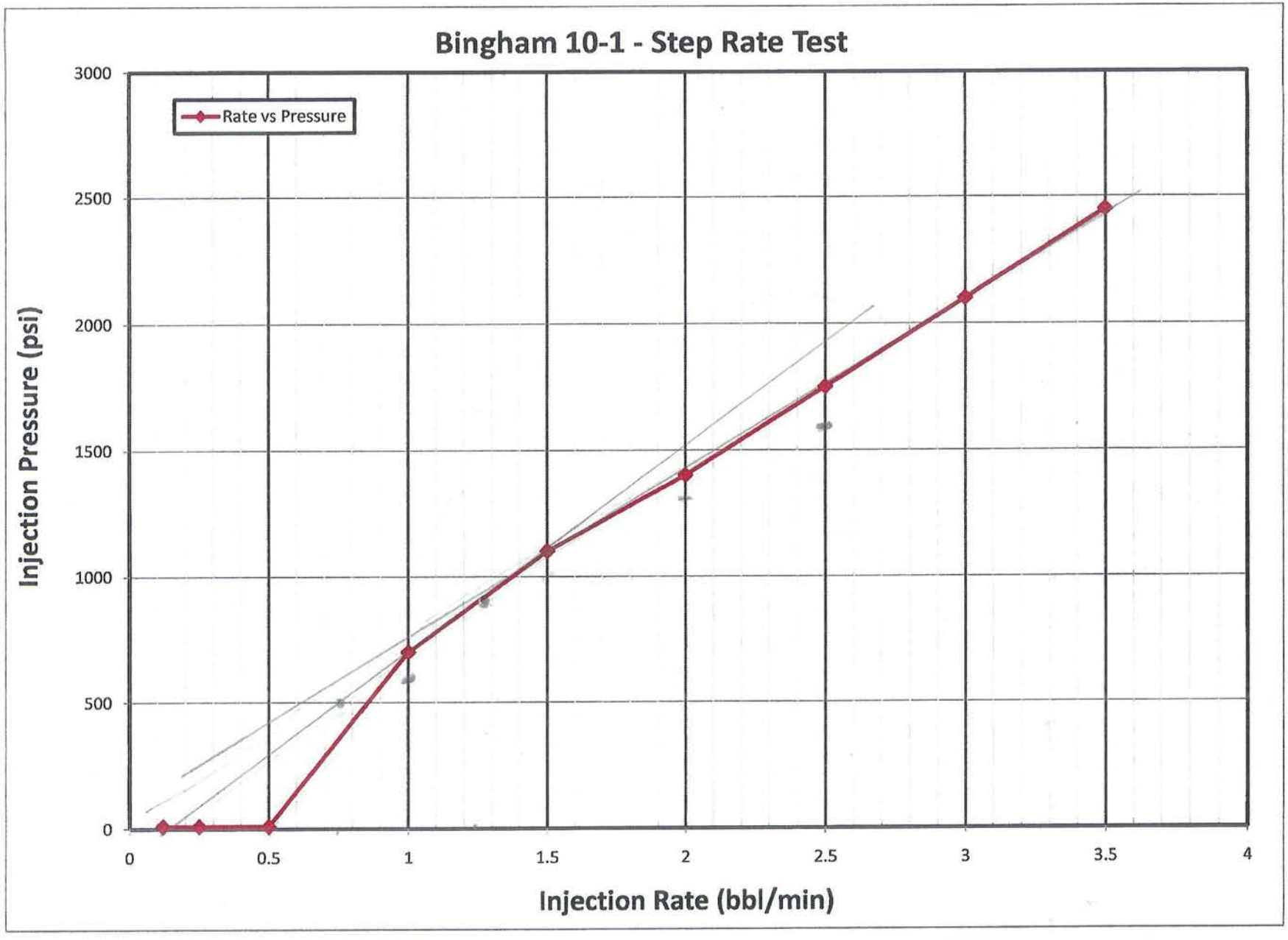
Bingham 10-1 - Step Rate Test
Rate vs Pressure
Injection Pressure (psi)
3000
2500
2000
1500
1000
500
0
0
0.5
1
1.5
2
2.5
3
3.5
4
Injection Rate (bbl/min)

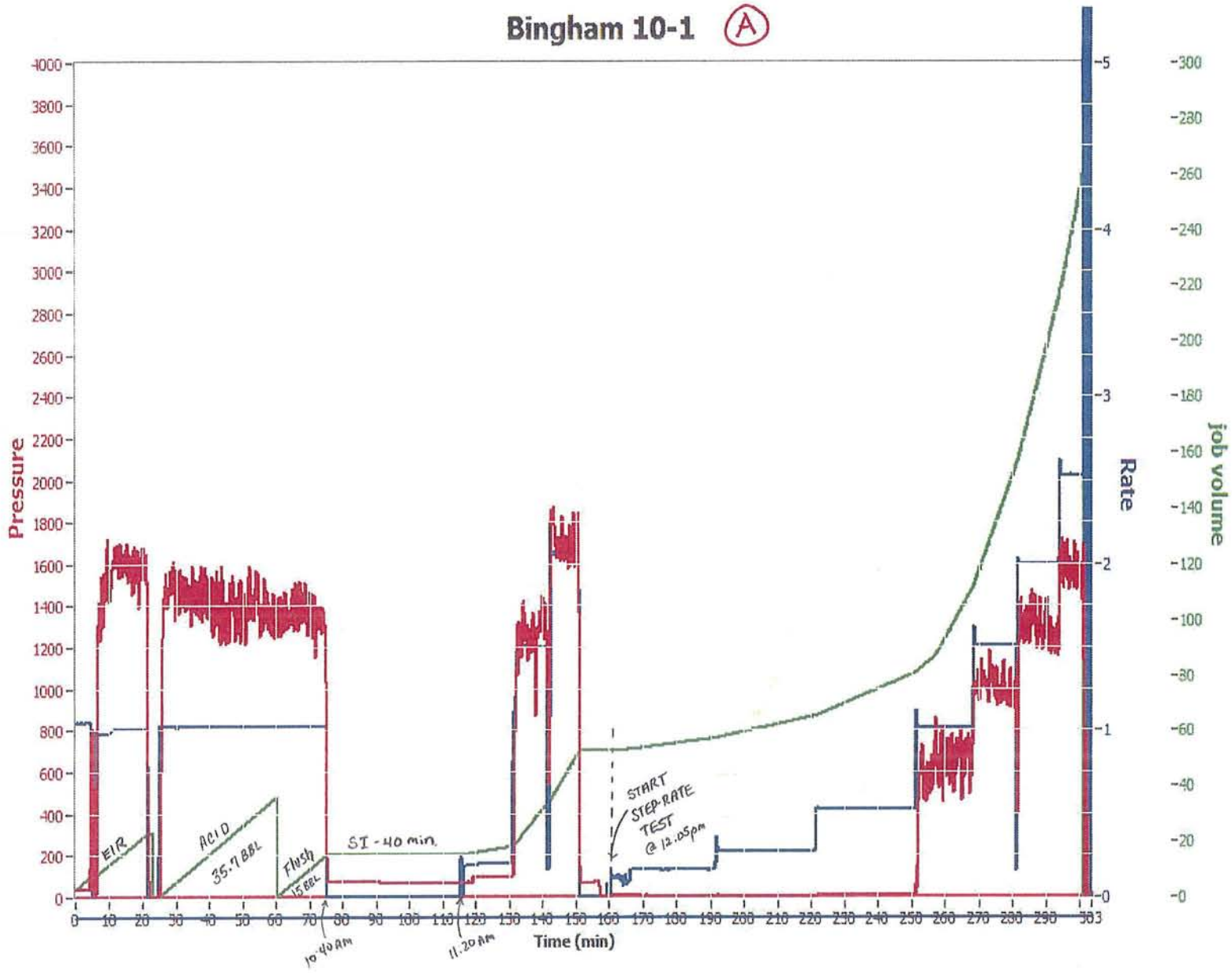
Bingham 10-1
A
Pressure
Rate
job volume
Time (min)
EIR
ACID
35.7 BBL
Flush
15 BBL
SI - 40 min.
START
STEP-RATE
TEST
@ 12:05pm
10:40 AM
11:20 AM

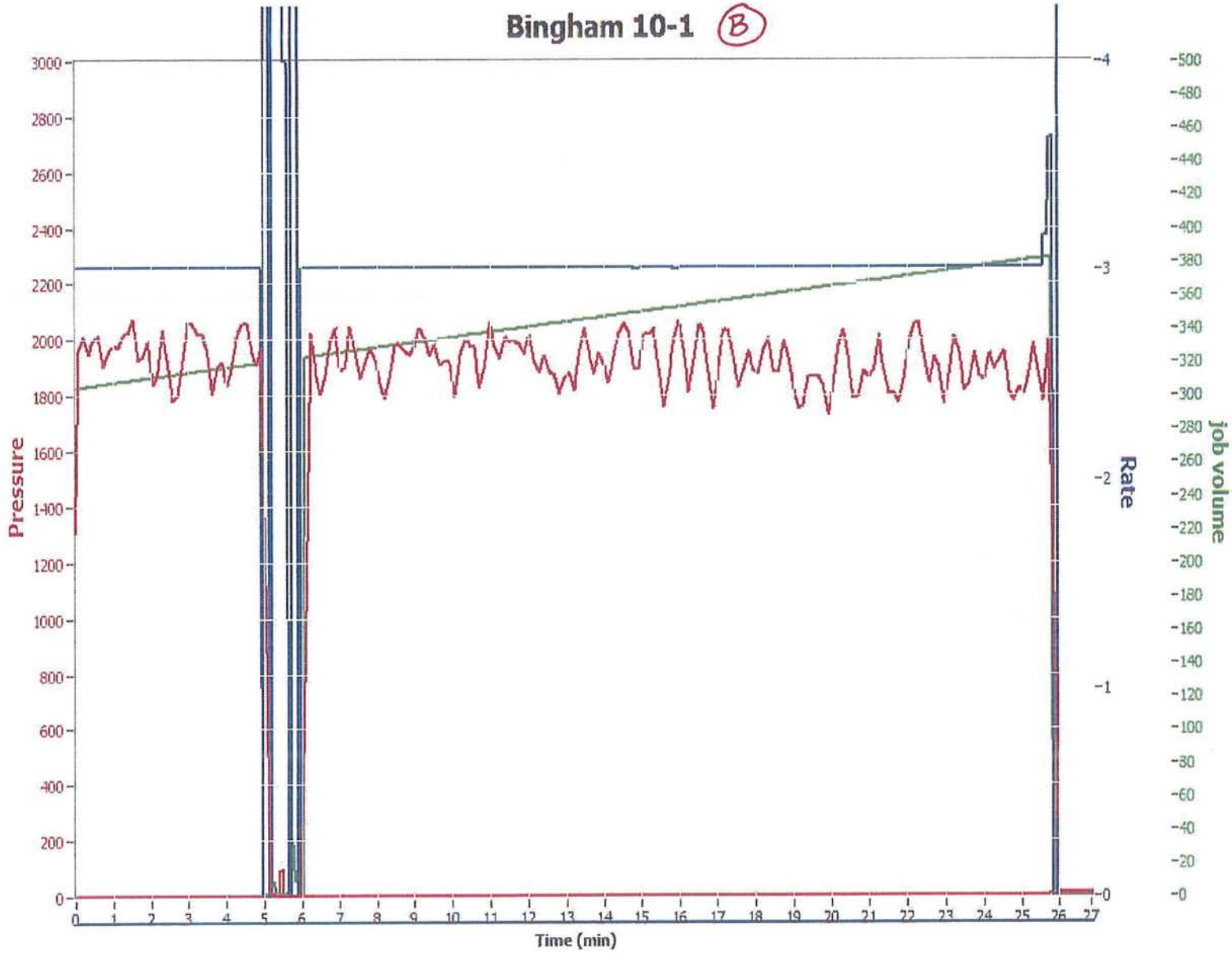
Bingham 10-1
B
Pressure
Rate
job volume
Time (min)

Bingham 10-1 (C)

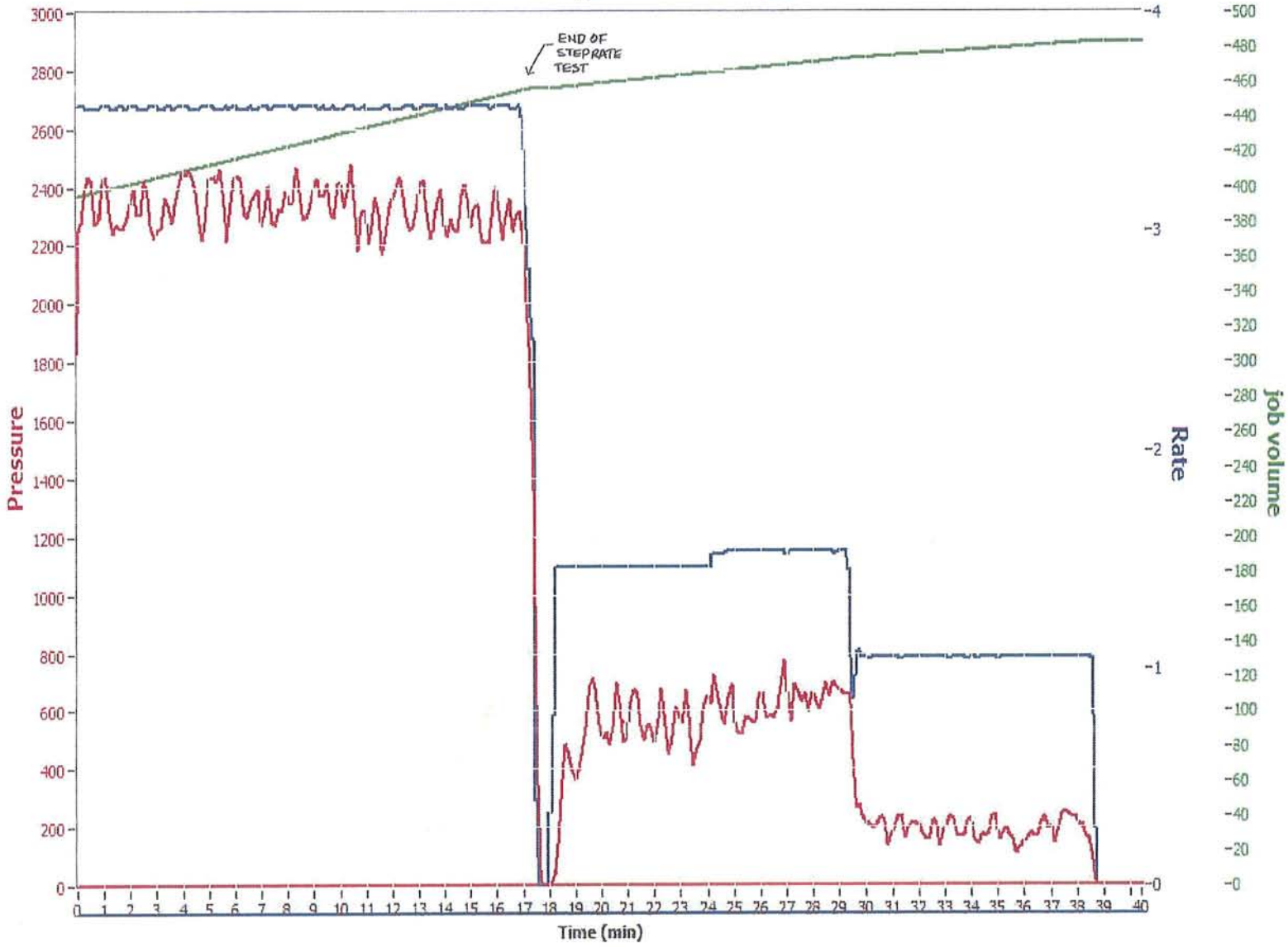

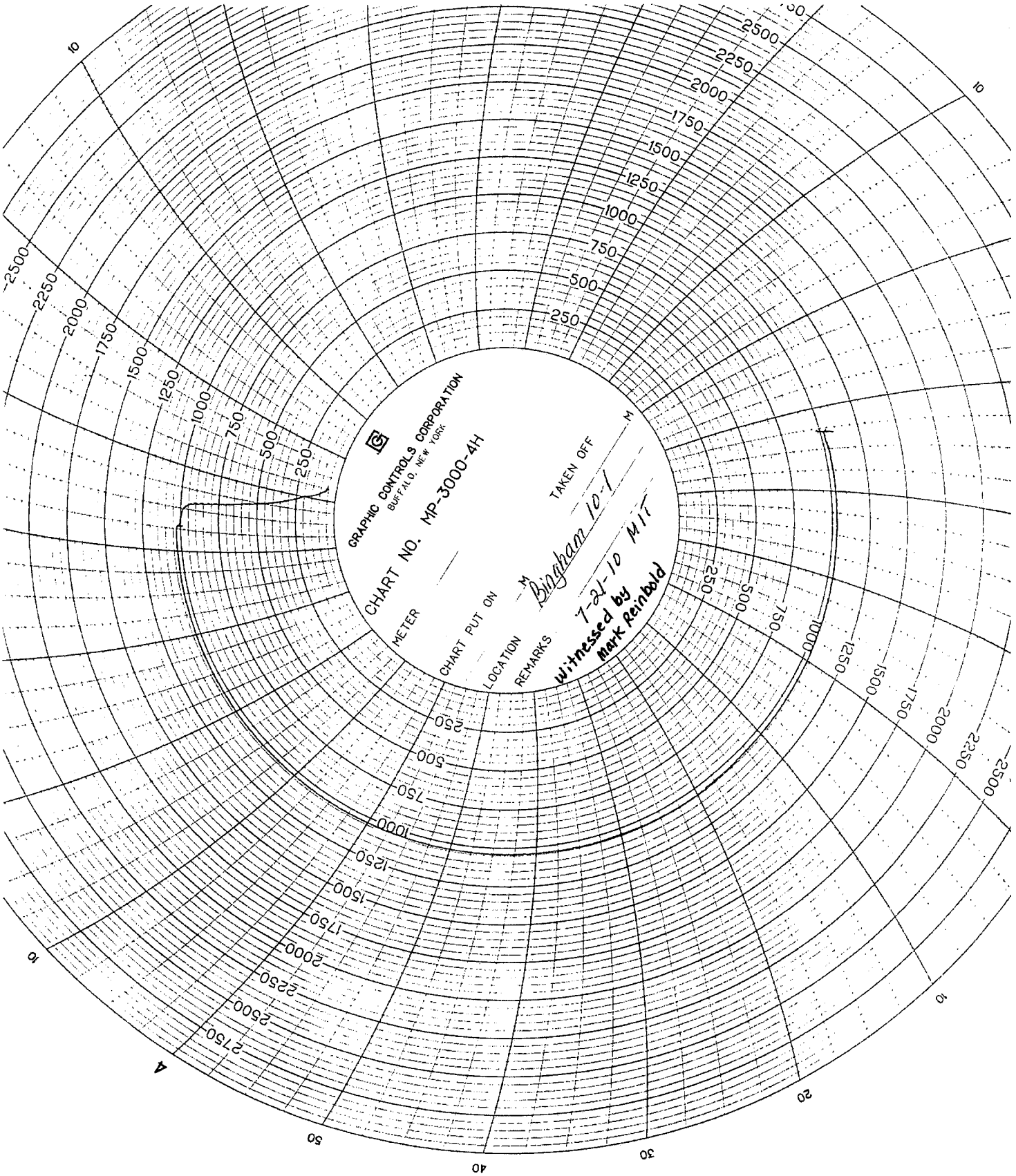
GRAPHIC CONTROLS CORPORATION
BUFFALO, NEW YORK
CHART NO. MP-3000-4H
METER
CHART PUT ON
TAKEN OFF
LOCATION
REMARKS
Bingham 10-1
7-21-10 MIT
Witnessed by
Mark Reinbold
250
500
750
1000
1250
1500
1750
2000
2250
2500
2750
10
20
30
40
50
4

GARY R. HERBERT
Governor

GREGORY S. BELL
Lieutenant Governor

State of Utah

DEPARTMENT OF NATURAL RESOURCES
MICHAEL R. STYLER
Executive Director

Division of Oil, Gas and Mining
JOHN R. BAZA
Division Director

UNDERGROUND INJECTION CONTROL PERMIT

Cause No. UIC-360

Operator:	Citation Oil & Gas Corp.
Wells:	Bingham 10-1
Location:	Section 10, Township 2 North, Range 7 East (SLBM)
County:	Summit
API No.:	43-043-30025
Well Type:	Salt Water Disposal Well

Stipulations of Permit Approval

1. Approval for conversion to Injection Well issued on April 7, 2010
2. Maximum Allowable Surface Pressure: 1100 psi.
3. Corresponding Injection Rate: As limited by pressure.
4. Injection Interval: Perforations between 9,822' and 9,936' in the Nugget Sandstone.

Approved by: _____ 8/4/10
Dan Jarvis
Acting Associate Director

Date

DJJ/MLR/js
cc: Bruce Suchomel, Environmental Protection Agency
Summit County
Well File

N:\O&G Reviewed Docs\ChronFile\UIC\Citation Oil Corp

FORM 9

STATE OF UTAH
DEPARTMENT OF NATURAL RESOURCES
DIVISION OF OIL, GAS AND MINING

5. LEASE DESIGNATION AND SERIAL NUMBER: Fee

SUNDRY NOTICES AND REPORTS ON WELLS

6. IF INDIAN, ALLOTTEE OR TRIBE NAME:

7. UNIT or CA AGREEMENT NAME:

Do not use this form for proposals to drill new wells, significantly deepen existing wells below current bottom-hole depth, reenter plugged wells, or to drill horizontal laterals. Use APPLICATION FOR PERMIT TO DRILL form for such proposals.

1. TYPE OF WELL: OIL WELL ☑ GAS WELL ☐ OTHER

8. WELL NAME and NUMBER: Bingham 10-1

2. NAME OF OPERATOR: Citation Oil & Gas Corp.

9. API NUMBER: 4304330025

3. ADDRESS OF OPERATOR: P O Box 690688 CITY Houston STATE TX ZIP 77269I

PHONE NUMBER: (281) 891-1565

10. FIELD AND POOL, OR WILDCAT: Pineview Twin Creek

4. LOCATION OF WELL

FOOTAGES AT SURFACE: 682 FNL & 3279 FWL

COUNTY: Summit

QTR/QTR, SECTION, TOWNSHIP, RANGE, MERIDIAN: NWNE 10 2N 7E

STATE: UTAH

11. CHECK APPROPRIATE BOXES TO INDICATE NATURE OF NOTICE, REPORT, OR OTHER DATA

TYPE OF SUBMISSION	TYPE OF ACTION		
☐ NOTICE OF INTENT (Submit in Duplicate)	☐ ACIDIZE	☐ DEEPEN	☐ REPERFORATE CURRENT FORMATION
Approximate date work will start:	☐ ALTER CASING	☐ FRACTURE TREAT	☐ SIDETRACK TO REPAIR WELL
	☐ CASING REPAIR	☐ NEW CONSTRUCTION	☐ TEMPORARILY ABANDON
	☐ CHANGE TO PREVIOUS PLANS	☐ OPERATOR CHANGE	☐ TUBING REPAIR
	☐ CHANGE TUBING	☐ PLUG AND ABANDON	☐ VENT OR FLARE
☑ SUBSEQUENT REPORT (Submit Original Form Only)	☐ CHANGE WELL NAME	☐ PLUG BACK	☐ WATER DISPOSAL
	☐ CHANGE WELL STATUS	☐ PRODUCTION (START/RESUME)	☐ WATER SHUT-OFF
Date of work completion: 8/13/2010	☐ COMMINGLE PRODUCING FORMATIONS	☐ RECLAMATION OF WELL SITE	☑ OTHER: Commencement of Injection
	☐ CONVERT WELL TYPE	☐ RECOMPLETE - DIFFERENT FORMATION	

12. DESCRIBE PROPOSED OR COMPLETED OPERATIONS. Clearly show all pertinent details including dates, depths, volumes, etc.

Citation Oil & Gas Corp. MIRU. Pressure tested with state witness 7/21/2010. Acidized w/ 1500 gals 15% HCL. Ran step rate test 7/23/2010. Commenced injection on the referenced well 8/13/2010.

NAME (PLEASE PRINT) Bridget Lisenbe TITLE Permitting Analyst

SIGNATURE Bridget Lisenbe DATE 9/8/2010

(This space for State use only)

RECEIVED
SEP 13 2010
DIV. OF OIL, GAS & MINING

(5/2000) (See Instructions on Reverse Side)

Mark Reinbold - Re: Bingham 10-1 - Maximum Allowable Surface Pressure

From: Mark Reinbold
To: Armando Lopez-Rocha
Date: 9/29/2010 11:05 AM
Subject: Re: Bingham 10-1 - Maximum Allowable Surface Pressure

Armando,

I received your request. I have discussed it with Brad Hill, Dan Jarvis, and Dustin Doucet. Your request is under consideration. However, for a start, we will need additional supporting documentation. We need to see the raw fracture data, including pressures and charts, for the Bingham 2-1 and Bingham 2-1A wells. Also, show how these wells relate geologically to the Bingham 10-1 well.

Mark L. Reinbold, Environmental Scientist
Utah Department of Natural Resources
Division of Oil, Gas & Mining
1594 W North Temple
PO Box 145801
Salt Lake City, UT 84114-5801
Phone 801-538-5333
Fax 801-539-3940

>>> Armando Lopez-Rocha <ALopez-Rocha@cogc.com> 9/29/2010 9:04 AM >>>
Mark Reinbold

Find attached a request for a maximum allowable surface pressure of 2000 psi for the Bingham 10-1 SWD well.

Please forward to whom it is necessary and let me know if you have any questions.

Regards,

Armando Lopez
Sr. Production Engineer
Central Region
Citation Oil & Gas Corp.
281.387.0311 (Cell)
281.891.1484 (Office)

From: Armando Lopez-Rocha <ALopez-Rocha@cogc.com>
To: Mark Reinbold <markreinbold@utah.gov>
CC: Mark Bing <MBing@cogc.com>, Kristopher Johnson <KJohnson@cogc.com>
Date: 9/29/2010 9:06 AM
Subject: Bingham 10-1 - Maximum Allowable Surface Pressure
Attachments: Bingham 10-1 - HigherInjPressRequest.pdf

Mark Reinbold

Find attached a request for a maximum allowable surface pressure of 2000 psi for the Bingham 10-1 SWD well.

Please forward to whom it is necessary and let me know if you have any questions.

Regards,

Armando Lopez
Sr. Production Engineer
Central Region
Citation Oil & Gas Corp.
281.387.0311 (Cell)
281.891.1484 (Office)

Citation
OIL & GAS CORP.

September 21, 2010

State of Utah Department of Natural Resources
Attn: Dan Jarvis
1594 West North Temple
Suite 1210
Salt Lake City, UT 84114

Re: Maximum Allowable Surface Pressure
Bingham 10-1 SWD well
(API No. 43-043-30025)
Pineview Field
682' N and 3279' W of SEc of Sec. 10 T2N R7E
Summit County, Illinois

Citation Oil and Gas Corp. requests approval to increase the Maximum Allowable Surface Pressure to 2000 psi in the Bingham 10-1 salt water disposal well. We understand that generally a step-rate-test is used to calculate maximum injection pressure. However, due to the injection capacity of the Bingham 10-1, and the well's mechanical configuration, it is impossible to reach formation fracture pressure due to friction pressure loses down the tubing.

Figure A attached shows results of the last step-rate-test performed on the Bingham 10-1 in the Pineview field on July 23, 2010. Please note that at the requested 2000 psi surface pressure the slope of this curve has not changed indicating that fracture pressure has been exceeded. Figure B plots the bottomhole pressure, friction pressure, and surface injection pressure using the step-rate-test data obtained during the step-rate-test on July 23, 2010. Calculations to generate these curves are attached on Table 1. As shown on Figure B, the calculated bottomhole pressure will never reach the Nugget's estimated fracture pressure due to pressure losses caused by tubing friction as injection rate increases down the set 2 7/8-in and 2 3/8-in tubing with increasing rates. The bottomhole pressure is equal to the sum of the surface and hydrostatic pressures minus the pressure losses due to friction caused by the tubing and perforations.

The fracture pressure for the Nugget formation in the Bingham 10-1 well is estimated at 8152 psi. This was based on fracture treatments performed on two offset wells (Bingham 2-1 and Bingham 2-1A) in November 1976 and June 1980, respectively.

Please call us at 281-891-1484 should you have any questions or concerns.

Armando Lopez
Sr. Production Engineer
Central Region
Citation Oil & Gas Corp.
14077 Cutten Road
Houston, TX 77069

Figure A

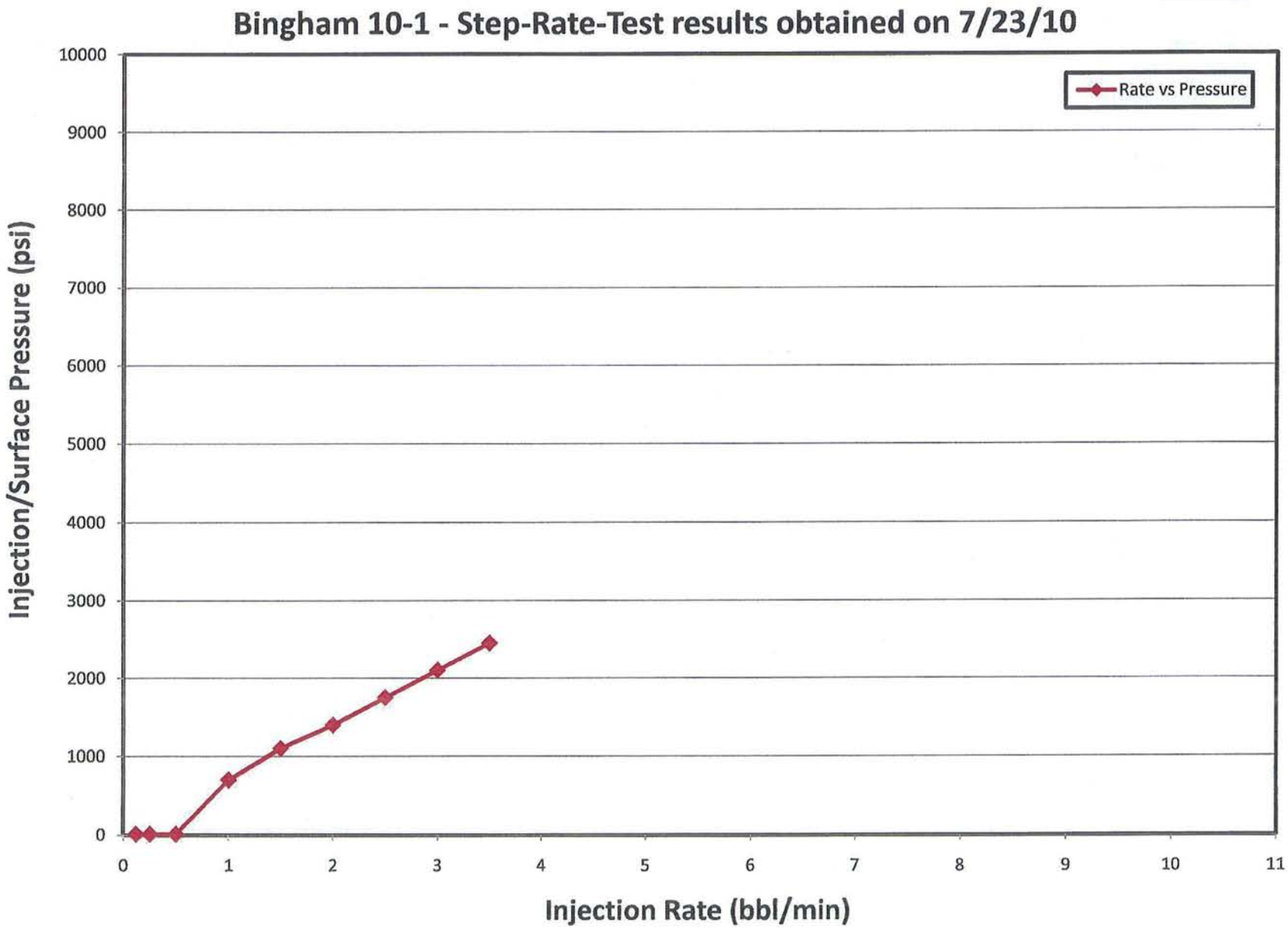
Bingham 10-1 - Step-Rate-Test results obtained on 7/23/10
Rate vs Pressure
Injection/Surface Pressure (psi)
10000
9000
8000
7000
6000
5000
4000
3000
2000
1000
0
0
1
2
3
4
5
6
7
8
9
10
11
Injection Rate (bbl/min)

Figure B

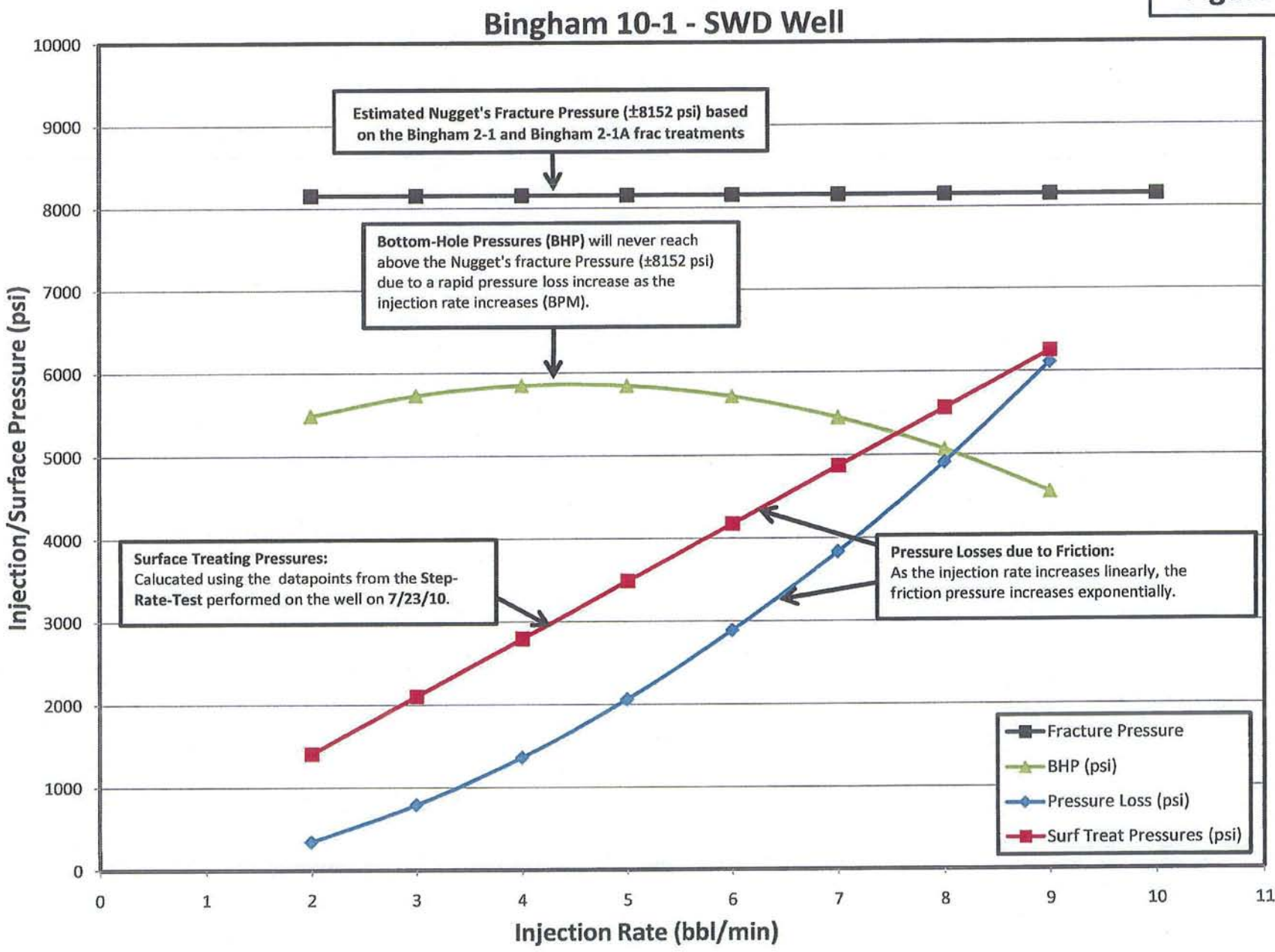
Bingham 10-1 - SWD Well
Estimated Nugget's Fracture Pressure (±8152 psi) based on the Bingham 2-1 and Bingham 2-1A frac treatments
Bottom-Hole Pressures (BHP) will never reach above the Nugget's fracture Pressure (±8152 psi) due to a rapid pressure loss increase as the injection rate increases (BPM).
Surface Treating Pressures:
Calucated using the datapoints from the Step-Rate-Test performed on the well on 7/23/10.
Pressure Losses due to Friction:
As the injection rate increases linearly, the friction pressure increases exponentially.
Fracture Pressure
BHP (psi)
Pressure Loss (psi)
Surf Treat Pressures (psi)
Injection/Surface Pressure (psi)
Injection Rate (bbl/min)
0
1000
2000
3000
4000
5000
6000
7000
8000
9000
10000
0
1
2
3
4
5
6
7
8
9
10
11

Bingham 10-1 - SWD well

TABLE 1

GENERAL INFO

NUGGET FORMATION	Top	Bottom	
Perf Interval	9822	9936	ft

Mid Perf	9879	ft
Hydrostatic Pressure	4417	psi, to mid perf

	I.D., in.	
2.375 (IPC)	1.866	in.
2.875 (IPC)	2.312	in.

Rate Conversion [BBLs/Day] to [gpm]
34.2857 BFPD/gpm

PRESSURE LOSS CALCULATIONS

****Based on Hazen-Williams Equation, C=150, and the respective tbg I.D. (IPC's)**

BWIPD (bbl/day)	BPM (bbl/min)	GPM (gal/min)	2 7/8" (7210') Press Loss, psi	2 3/8" (2446') Press Loss, psi	Total Pressure Loss Dwn Tbg, psi
5000	3.5	145.8	534.56	514.49	**1049.05**
6000	4.2	175.0	749.00	720.88	**1469.88**
7000	4.9	204.2	996.17	958.78	**1954.95**
8000	5.6	233.3	1275.32	1227.44	**2502.76**
9000	6.3	262.5	1585.81	1526.28	**3112.09**
10000	6.9	291.7	1927.09	1854.75	**3781.84**
11000	7.6	320.8	2298.68	2212.39	**4511.07**
12000	8.3	350.0	2700.15	2598.79	**5298.94**
13000	9.0	379.2	3131.10	3013.57	**6144.67**

BPM	Pressure Loss (psi)	Surf Treat Pressures (psi)	BHP (psi)	Nugget's Frac Pressure, 8152 psi
2	344	1410	5483	**The BHPs are less than the Nugget's fracture pressure of 8152 psi**
3	791	2102	5727	
4	1364	2793	5846	
5	2062	3485	5839	
6	2886	4176	5707	
7	3836	4868	5448	
8	4911	5559	5064	
9	6112	6250	4555	
10				

BHP = (Surface Pressure) + (Hydrostatic Pressure) - (Friction Pressure)-(Press Loss at Perfs)

Pineview Field - Frac Gradients

Well Name	Date	Stimulation	Zone	Perf Interval		Mid Perf, ft	ISIP psi	Phyd psi	Frac Gradient, psi	Fracture Pressure
Bingham #2-1	Nov-76	Frac Stim	Nugget	9620	9700	9660	3300	4287	0.79	7587
Bingham #2-1A	Jun-80	Frac Stim	Nugget	9431	9431	9431	4000	4186	0.87	8186
								Average	0.83	
Bingham #10-1	Sep-76	NA	Nugget	9822	9936	9879		4385	0.83	8152

Bingham #10-1 - Fracture Pressure to the top of the Perf is 8152 psi.

CITATION OIL AND GAS CORPORATION
WELLBORE DIAGRAM AND INFORMATION
UPDATED WELLBORE DIAGRAM

Well Name:	Bingham 10-1	**Field:**	Pineview
Date:	08/02/10 (AL)	**Location:**	NW/NE Sec. 10, T2N, R7E
County:	Summit	**State:**	Utah

Surface:	**682' FNL & 3279' FWL Sec. 10, T-2-N, R-7-E Summit County, UT**
Completed:	**11/7/76**
Elevation:	**6764' GL**
KB:	**12'**
API #:	**43-043-30025**

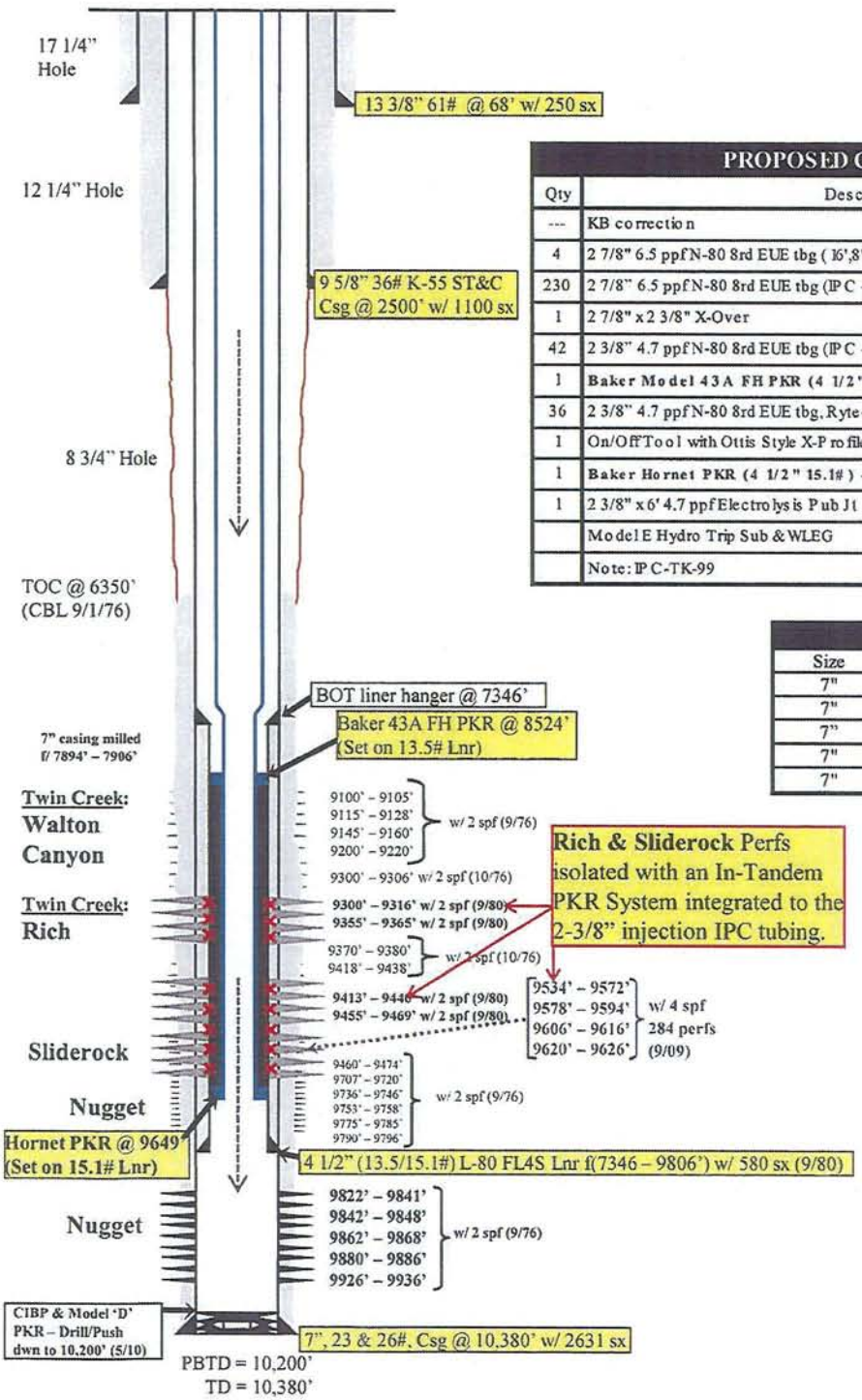

PROPOSED COMPLETION ASSEMBLY

Qty	Description	Length	Depth
---	KB correction	12.00	12.00
4	2 7/8" 6.5 ppf N-80 8rd EUE tbg (16',8',6',2' Electrolysis NP Pub Jts)	27.00	39.00
230	2 7/8" 6.5 ppf N-80 8rd EUE tbg (IPC – ID: 2.312")	7171.64	7210.64
1	2 7/8" x 2 3/8" X-Over	0.67	7211.31
42	2 3/8" 4.7 ppf N-80 8rd EUE tbg (IPC – ID: 1.866")	1306.83	8518.14
1	**Baker Model 43A FH PKR (4 1/2"-13.4#) - Nickel Plated CPE~1.75'**	5.51	**8523.65**
36	2 3/8" 4.7 ppf N-80 8rd EUE tbg, Ryte-Wrap (IPC – ID: 1.866")	1116.71	9640.36
1	On/Off Tool with Ottis Style X-Profile (ID: 1.875")	1.34	9641.70
1	**Baker Hornet PKR (4 1/2" 15.1#) - Nickel Plated CPE~2.25'**	7.05	**9648.75**
1	2 3/8" x 6' 4.7 ppf Electrolysis Pub Jt	6.25	9655.00
	Model E Hydro Trip Sub & WLEG	1.50	9656.50
	Note: IPC-TK-99		

7" CASING DETAIL

Size	Weight	Grade	Depth
7"	26	S-95	Surf – 25
7"	23	N-80	25 – 5701
7"	23	S-95	5701 – 7550
7"	26	S-95	7550 – 8320
7"	23	S-95	8320 – 10380

4 1/2" LINER DETAIL

Size	Weight	ID / Drift ID	Grade	Length
4 ½"	13.5	3.92" / 3.795"	L-80	Top 1314'
4 ½"	15.1	3.826" / 3.701"	L-80	Bottom 1146'

(9/09) Tag'd 4 ½" (15.1#) Lnr top jt @ 8674'

Mark Reinbold - RE: Bingham 10-1 - Maximum Allowable Surface Pressure

From: Armando Lopez-Rocha <ALopez-Rocha@cogc.com>
To: Mark Reinbold <markreinbold@utah.gov>
Date: 10/5/2010 11:01 AM
Subject: RE: Bingham 10-1 - Maximum Allowable Surface Pressure
CC: Kristopher Johnson <KJohnson@cogc.com>, Josh Kull <JKull@cogc.com>
Attachments: SKMBT_C35310100510010.pdf; SKMBT_C35310100510011.pdf; SKMBT_C35310100510020.pdf; SKMBT_C35310100510060.pdf

Mark,

For your review, please find attached the completion reports and WBDs for the Bingham 2-1 and 2-1A, a 3-well cross-section, and a Pineview field structure map.

The Bingham 10-1, 2-1, and 2-1A wells were correlated on a cross-section diagram and are connected with a blue line on the Nugget structure map. As you can see, the Bingham 2-1 and 2-1A are structurally higher than the Bingham 10-1 well. The Bingham 2-1 and 2-1A wells are approximately 3000-ft away from the Bingham 10-1 SWD well.

Based on the Nugget correlation and the wells proximity to each other, the fracture gradient obtained from the Nugget perfs in the Bingham 2-1 and 2-1A should be representative to the fracture gradient in the active Nugget perfs (9822-9936) in the Bingham 10-1 SWD well. I should note that the perfs used to calculate the Nugget's frac gradient in the Bingham 2-1 were cement squeezed immediately after its initial completions and are no longer on production. These perfs are shown in gray on the cross-section diagram. The active perfs are shown in red.

Also, a copy of the actual hydraulic fracture data and charts for the Bingham 2-1 and 2-1A are NOT on file; however, the pressure results and frac volumes were reported by American Quasar Petroleum as shown on separate attachments dated 1976 and 1981, respectively.

The formation fracture gradient and fracture pressures were obtained by using the following equations:
(1) Fracture Gradient = (Instantaneous Shut-In Pressure) x (Hydrostatic Pressure) / (Mid Perforations Depth)
(2) Fracture Pressure = (Frac Gradient [psi/ft]) x (Perforations Depth [ft])

Pineview Field - Frac Gradients

Well Name	Date	Stimulation	Zone	Perf Interval		Mid Perf, ft	ISIP psi	Phyd psi	Frac Gradient, psi	Fracture Pressure
Bingham #2-1	Nov-76	Frac Stim	Nugget	9620	9700	9660	3300	4287	0.79	7587
Bingham #2-1A	Jun-80	Frac Stim	Nugget	9431	9507	9469	4000	4203	0.87	8203
								Average	0.83	
Bingham #10-1	Sep-76	NA	Nugget	9822	9936	9879		4385	0.83	8152

Bingham #10-1 - Fracture Pressure to the top of the Perf is 8152 psi.

Let me know if you have any questions.
Regards,

Armando Lopez

From: Mark Reinbold [mailto:markreinbold@utah.gov]
Sent: Wednesday, September 29, 2010 12:05 PM
To: Armando Lopez-Rocha
Subject: Re: Bingham 10-1 - Maximum Allowable Surface Pressure

Armando,

I received your request. I have discussed it with Brad Hill, Dan Jarvis, and Dustin Doucet. Your request is under consideration. However, for a start, we will need additional supporting documentation. We need to see the raw fracture data, including pressures and charts, for the Bingham 2-1 and Bingham 2-1A wells. Also, show how these wells relate geologically to the Bingham 10-1 well.

Mark L. Reinbold, Environmental Scientist
Utah Department of Natural Resources
Division of Oil, Gas & Mining
1594 W North Temple

PO Box 145801
Salt Lake City, UT 84114-5801
Phone 801-538-5333
Fax 801-539-3940

>>> Armando Lopez-Rocha <ALopez-Rocha@cogc.com> 9/29/2010 9:04 AM >>>
Mark Reinbold

Find attached a request for a maximum allowable surface pressure of 2000 psi for the Bingham 10-1 SWD well.

Please forward to whom it is necessary and let me know if you have any questions.

Regards,

Armando Lopez
Sr. Production Engineer
Central Region
Citation Oil & Gas Corp.
281.387.0311 (Cell)
281.891.1484 (Office)

Carol Daniels - Citation - Bingham 10-1/43-043-30025

From: Lisha Cordova
To: Carol Daniels
Date: 10/18/2010 10:35 AM
Subject: Citation - Bingham 10-1/43-043-30025
CC: Mark Reinbold

2N 7E 10

Hi Carol,

The above referenced well is listed as a WIW in the system; it should be a WDW, please update the system.

Thanks,
Lisha

RECEIVED
OCT 18 2010
DIV. OF OIL, GAS & MINING

GARY R. HERBERT
Governor

GREGORY S. BELL
Lieutenant Governor

State of Utah

DEPARTMENT OF NATURAL RESOURCES
MICHAEL R. STYLER
Executive Director

Division of Oil, Gas and Mining
JOHN R. BAZA
Division Director

UNDERGROUND INJECTION CONTROL PERMIT
AMENDED

Cause No. UIC-360

Operator:	Citation Oil & Gas Corp.
Wells:	Bingham 10-1
Location:	Section 10, Township 2 North, Range 7 East (SLBM)
County:	Summit
API No.:	43-043-30025
Well Type:	Salt Water Disposal Well

Stipulations of Permit Approval

1. Approval for conversion to Injection Well issued on April 7, 2010
2. Maximum Allowable Surface Pressure: 2000 psi.
3. Corresponding Injection Rate: As limited by pressure.
4. Injection Interval: Perforations between 9,822' and 9,936' in the Nugget Sandstone.

Approved by: _____ 10-28-10
John Rogers
Associate Director
Date

JR/MLR/js
cc: Bruce Suchomel, Environmental Protection Agency
Summit County
Well File

N:\O&G Reviewed Docs\ChronFile\UIC\Citation Oil Corp

Carol Daniels - Citation - Bingham 10-1/43-043-30025

From: Lisha Cordova
To: Carol Daniels
Date: 10/18/2010 10:35 AM
Subject: Citation - Bingham 10-1/43-043-30025
CC: Mark Reinbold

2N 7E 10

Hi Carol,

The above referenced well is listed as a WIW in the system; it should be a WDW, please update the system.

Thanks,
Lisha

RECEIVED
OCT 18 2010
DIV. OF OIL, GAS & MINING

FORM 9

STATE OF UTAH
DEPARTMENT OF NATURAL RESOURCES
DIVISION OF OIL, GAS AND MINING

SUNDRY NOTICES AND REPORTS ON WELLS

Do not use this form for proposals to drill new wells, significantly deepen existing wells below current bottom-hole depth, reenter plugged wells, or to drill horizontal laterals. Use APPLICATION FOR PERMIT TO DRILL form for such proposals.

5. LEASE DESIGNATION AND SERIAL NUMBER: Fee
6. IF INDIAN, ALLOTTEE OR TRIBE NAME:
7. UNIT or CA AGREEMENT NAME:
8. WELL NAME and NUMBER: Bingham 10-1
9. API NUMBER: 4304330025
10. FIELD AND POOL, OR WILDCAT: Pineview Twin Creek

1. TYPE OF WELL: OIL WELL ☑ GAS WELL ☐ OTHER
2. NAME OF OPERATOR: Citation Oil & Gas Corp.
3. ADDRESS OF OPERATOR: P O Box 690688 CITY Houston STATE TX ZIP 77269 PHONE NUMBER: (281) 891-1565
4. LOCATION OF WELL
FOOTAGES AT SURFACE: 682 FNL & 3279 FWL COUNTY: Summit
QTR/QTR, SECTION, TOWNSHIP, RANGE, MERIDIAN: NWNE 10 2N 7E STATE: UTAH

11. CHECK APPROPRIATE BOXES TO INDICATE NATURE OF NOTICE, REPORT, OR OTHER DATA

TYPE OF SUBMISSION	TYPE OF ACTION		
☐ NOTICE OF INTENT (Submit in Duplicate)	☐ ACIDIZE	☐ DEEPEN	☐ REPERFORATE CURRENT FORMATION
Approximate date work will start:	☐ ALTER CASING	☐ FRACTURE TREAT	☐ SIDETRACK TO REPAIR WELL
	☐ CASING REPAIR	☐ NEW CONSTRUCTION	☐ TEMPORARILY ABANDON
	☐ CHANGE TO PREVIOUS PLANS	☐ OPERATOR CHANGE	☐ TUBING REPAIR
	☐ CHANGE TUBING	☐ PLUG AND ABANDON	☐ VENT OR FLARE
☑ SUBSEQUENT REPORT (Submit Original Form Only)	☐ CHANGE WELL NAME	☐ PLUG BACK	☐ WATER DISPOSAL
Date of work completion:	☐ CHANGE WELL STATUS	☐ PRODUCTION (START/RESUME)	☐ WATER SHUT-OFF
	☐ COMMINGLE PRODUCING FORMATIONS	☐ RECLAMATION OF WELL SITE	☑ OTHER: Commencement of injection
	☐ CONVERT WELL TYPE	☐ RECOMPLETE - DIFFERENT FORMATION	

12. DESCRIBE PROPOSED OR COMPLETED OPERATIONS. Clearly show all pertinent details including dates, depths, volumes, etc.

Citation MIRU. Pressure tested with the state 7/21/2010. Acidized with 1500 gals 15%HCL. Ran step rate test 7/23/2010. Well commenced injection in the Nugget 8/13/2010.

NAME (PLEASE PRINT) Bridget Lisenbe TITLE Permitting Analyst
SIGNATURE Bridget Lisenbe DATE 11/15/2010

(This space for State use only)

RECEIVED
NOV 22 2010
DIV. OF OIL, GAS & MINING

(5/2000) (See Instructions on Reverse Side)

STATE OF UTAH
DIVISION OF OIL, GAS AND MINING

MONTHLY SUMMARY REPORT OF GAS PROCESSING PLANT OPERATIONS - FORM 13-A

FACILITY: PINEVIEW GAS PLANT
OPERATOR: CITATION OIL AND GAS CORP.
ADDRESS: 14077 CUTTEN ROAD
HOUSTON, TX 77069-2212

OPERATIONS MONTH/YR: Mar-13

CORRECTED REPORT [ ]

GAS ACQUISITIONS	MCF
1. GAS INTO GATHERING SYSTEM	25816
2. DISPOSITIONS OF UNPROCESSED WET GAS FROM GATHERING SYSTEM (explain)	
3. PLANT INTAKE FROM GATHERING SYSTEM (Plant meters)	25816
4. (LOSS) OR GAIN (line 3 - line 1 = line 2)	
5. GAS FROM OTHER PROCESSING PLANTS (Plant names:	
6. GAS FROM MAIN TRAINSMISSION LINE (Pipeline company:	
7. GAS WITHDRAWN FROM STORAGE	
TOTAL ACQUISITONS (add lines 3, 5, 6, and 7)	25816

GAS DISPOSITIONS			MCF
1. PLANT FUEL	3,302	7. CYCLED	
2. VENTED/FLARED	0	8. UNDERGROUND STORAGE	
3. EXTRACTION LOSS (SHRINKAGE)	7,234	9. OTHER PROCESSING PLANTS	
4. FIELD FUEL & USE	383	10. TRANSMISSION LINE	14,832
5. LIFT GAS		11. METER DIFFERENTIAL - LOSS/(GAIN)	65
6. REPRESSURING/PRESSURE MAINTENANCE		12. OTHER DISPOSITIONS (explain)	
TOTAL DISPOSITIONS (add lines 1 through 12)			25,816

PLANT PRODUCTION, RECEIPTS, DELIVERIES, AND STOCK IN GALLONS

PRODUCT	OPENING STOCK	RECEIPTS	PRODUCTION	DELIVERIES	CLOSING STOCK
ETHANE					
PROPANE					
ISO-BUTANE					
BUTANE					
NGL MIX	63,300		140,676	152,076	51,900
GASOLINE					
CONDENSATE					
KEROSENE					
OTHER:_____					
TOTAL	63,300		140,676	152,076	51,900

BTU OF GAS SOLD: 1.2207

PRODUCTION OF SULFUR FROM PROCESSING NATURAL GAS: _____ LONG TONS

COMMENTS:
No propane sales this month; propane stock sold off 1/99.
Plant now selling only NGL Mix.

I HEREBY CERTIFY THAT THIS REPORT IS TRUE AND COMPLETE TO THE BEST OF MY KNOWLEDGE.

SIGNATURE: Diane Cerny
Production Analyst I — 4/23/2013
TITLE — DATE

Phone No. (281) 891-1562

APR 2 9 2013

DIV. OF OIL, GAS & MINING

STATE OF UTAH
DIVISION OF OIL, GAS AND MINING

MONTHLY REPORT OF GAS PROCESSING PLANT PRODUCT ALLOCATIONS - FORM 13-B

FACILITY: PINEVIEW GAS PLANT
OPERATOR: CITATION OIL AND GAS CORP.
ADDRESS: 14077 CUTTEN ROAD
HOUSTON, TX 77070-5623

OPERATIONS MONTH/YR: Mar-13

CORRECTED REPORT ( )

WELL OPERATOR	WELL NAME	API NUMBER	METERED WELL VOLUME (MCF)	RESIDUE GAS RETURNED TO FIELD (MCF)	ALLOCATIONS: RESIDUE GAS SOLD (MCF)	ALLOCATIONS: NGLS (GALLONS)
CITATION OIL AND GAS CORP.	BINGHAM 2-1	43-043-30026	3,813	56	2,210	20,486
CITATION OIL AND GAS CORP.	BINGHAM 2-1A	43-043-30125	2,753	41	1,641	15,827
CITATION OIL AND GAS CORP.	BINGHAM 2-6H	43-043-30317	347	5	209	1,444
CITATION OIL AND GAS CORP.	BINGHAM 10-1	43-043-30025	0	0	0	0
CITATION OIL AND GAS CORP.	BINGHAM 1-42-3	43-043-30029	2,705	40	1,578	15,366
CITATION OIL AND GAS CORP.	UPRR 3-2	43-043-30015	1,319	20	730	9,082
CITATION OIL AND GAS CORP.	UPRR 3-6 TWCNG	43-043-30036	8,140	121	4,652	50,903
CITATION OIL AND GAS CORP.	UPRR 3-9	43-043-30151	3,698	55	2,070	22,146
CITATION OIL AND GAS CORP.	UPRR 3-10	43-043-30302	3,041	45	1,742	16,822
CITATION OIL AND GAS CORP.	JUDD 34-1H	43-043-30301	0	0	0	0
TOTALS (TOTAL ONLY IF THIS IS LAST PAGE OF REPORT)			25,816	383	14,832	152,076

COMMENTS:

I HEREBY CERTIFY THAT THIS REPORT IS TRUE AND COMPLETE TO THE BEST OF MY KNOWLEDGE.

SIGNATURE Diane Cerny DATE 23-Apr-13
TITLE Production Analyst I
PHONE NO. - 281-891-1562

APR 29 2013

DIV. OF OIL, GAS & MINING

STATE OF UTAH
DIVISION OF OIL, GAS AND MINING

Revision

MONTHLY REPORT OF GAS PROCESSING PLANT PRODUCT ALLOCATIONS - FORM 13-B

FACILITY: PINEVIEW GAS PLANT
OPERATOR: CITATION OIL AND GAS CORP.
ADDRESS: 14077 CUTTEN ROAD
HOUSTON, TX 77070-5623

OPERATIONS MONTH/YR: Mar-13

CORRECTED REPORT ( )

WELL OPERATOR	WELL NAME	API NUMBER	METERED WELL VOLUME (MCF)	RESIDUE GAS RETURNED TO FIELD (MCF)	ALLOCATIONS: RESIDUE GAS SOLD (MCF)	ALLOCATIONS: NGLS (GALLONS)
CITATION OIL AND GAS CORP.	BINGHAM 2-1	43-043-30026	3,815	56	2,213	20,498
CITATION OIL AND GAS CORP.	BINGHAM 2-1A	43-043-30125	2,753	41	1,641	15,827
CITATION OIL AND GAS CORP.	BINGHAM 2-6H	43-043-30317	347	5	209	1,444
CITATION OIL AND GAS CORP.	BINGHAM 10-1	43-043-30025	0	0	0	0
CITATION OIL AND GAS CORP.	BINGHAM 1-42-3	43-043-30029	2,706	40	1,578	15,372
CITATION OIL AND GAS CORP.	UPRR 3-2	43-043-30015	1,317	20	729	9,069
CITATION OIL AND GAS CORP.	UPRR 3-6 TWCNG	43-043-30036	8,137	121	4,650	50,886
CITATION OIL AND GAS CORP.	UPRR 3-9	43-043-30151	3,699	55	2,070	22,153
CITATION OIL AND GAS CORP.	UPRR 3-10	43-043-30302	3,042	45	1,742	16,827
CITATION OIL AND GAS CORP.	JUDD 34-1H	43-043-30301	0	0	0	0
TOTALS (TOTAL ONLY IF THIS IS LAST PAGE OF REPORT)			25,816	383	14,832	152,076

COMMENTS:

I HEREBY CERTIFY THAT THIS REPORT IS TRUE AND COMPLETE TO THE BEST OF MY KNOWLEDGE.

SIGNATURE Diane Cerny DATE
TITLE Production Analyst I 09-May-13
PHONE NO. - 281-891-1562

RECEIVED
MAY 28 2013
DIV. OF OIL, GAS & MINING

Revision

STATE OF UTAH
DIVISION OF OIL, GAS AND MINING

MONTHLY REPORT OF GAS PROCESSING PLANT PRODUCT ALLOCATIONS - FORM 13-B

FACILITY: PINEVIEW GAS PLANT
OPERATOR: CITATION OIL AND GAS CORP.
ADDRESS: 14077 CUTTEN ROAD
HOUSTON, TX 77070-5623

OPERATIONS MONTH/YR: Mar-13

CORRECTED REPORT ( )

WELL OPERATOR	WELL NAME	API NUMBER	METERED WELL VOLUME (MCF)	RESIDUE GAS RETURNED TO FIELD (MCF)	ALLOCATIONS: RESIDUE GAS SOLD (MCF)	ALLOCATIONS: NGLS (GALLONS)
CITATION OIL AND GAS CORP.	BINGHAM 2-1	43-043-30026	3,815	56	2,213	20,498
CITATION OIL AND GAS CORP.	BINGHAM 2-1A	43-043-30125	2,753	41	1,641	15,827
CITATION OIL AND GAS CORP.	BINGHAM 2-6H	43-043-30317	347	5	209	1,444
CITATION OIL AND GAS CORP.	BINGHAM 10-1	43-043-30025	0	0	0	0
CITATION OIL AND GAS CORP.	BINGHAM 1-42-3	43-043-30029	2,706	40	1,578	15,372
CITATION OIL AND GAS CORP.	UPRR 3-2	43-043-30015	1,317	20	729	9,069
CITATION OIL AND GAS CORP.	UPRR 3-6 TWCNG	43-043-30036	8,137	121	4,650	50,886
CITATION OIL AND GAS CORP.	UPRR 3-9	43-043-30151	3,699	55	2,070	22,153
CITATION OIL AND GAS CORP.	UPRR 3-10	43-043-30302	3,042	45	1,742	16,827
CITATION OIL AND GAS CORP.	JUDD 34-1H	43-043-30301	0	0	0	0
TOTALS (TOTAL ONLY IF THIS IS LAST PAGE OF REPORT)			25,816	383	14,832	152,076

COMMENTS:

I HEREBY CERTIFY THAT THIS REPORT IS TRUE AND COMPLETE TO THE BEST OF MY KNOWLEDGE.

Diane Cerny

SIGNATURE Diane Cerny DATE 09-May-13
TITLE Production Analyst I
PHONE NO. - 281-891-1562

RECEIVED
MAY 22 2013
DIV. OF OIL, GAS & MINING

STATE OF UTAH
DIVISION OF OIL, GAS AND MINING

MONTHLY SUMMARY REPORT OF GAS PROCESSING PLANT OPERATIONS - FORM 13-A

FACILITY: PINEVIEW GAS PLANT
OPERATOR: CITATION OIL AND GAS CORP.
ADDRESS: 14077 CUTTEN ROAD
HOUSTON, TX 77069-2212

OPERATIONS MONTH/YR: Mar-13

CORRECTED REPORT [ ]

GAS ACQUISITIONS	MCF
1. GAS INTO GATHERING SYSTEM	25816
2. DISPOSITIONS OF UNPROCESSED WET GAS FROM GATHERING SYSTEM (explain)	
3. PLANT INTAKE FROM GATHERING SYSTEM (Plant meters)	25816
4. (LOSS) OR GAIN (line 3 - line 1 = line 2)	
5. GAS FROM OTHER PROCESSING PLANTS (Plant names:	
6. GAS FROM MAIN TRAINSMISSION LINE (Pipeline company:	
7. GAS WITHDRAWN FROM STORAGE	
TOTAL ACQUISITONS (add lines 3, 5, 6, and 7)	25816

GAS DISPOSITIONS			MCF
1. PLANT FUEL	3,302	7. CYCLED	
2. VENTED/FLARED	0	8. UNDERGROUND STORAGE	
3. EXTRACTION LOSS (SHRINKAGE)	7,234	9. OTHER PROCESSING PLANTS	
4. FIELD FUEL & USE	383	10. TRANSMISSION LINE	14,832
5. LIFT GAS		11. METER DIFFERENTIAL - LOSS/(GAIN)	65
6. REPRESSURING/PRESSURE MAINTENANCE		12. OTHER DISPOSITIONS (explain)	
TOTAL DISPOSITIONS (add lines 1 through 12)			25,816

PLANT PRODUCTION, RECEIPTS, DELIVERIES, AND STOCK IN GALLONS

PRODUCT	OPENING STOCK	RECEIPTS	PRODUCTION	DELIVERIES	CLOSING STOCK
ETHANE					
PROPANE					
ISO-BUTANE					
BUTANE					
NGL MIX	63,300		140,676	152,076	51,900
GASOLINE					
CONDENSATE					
KEROSENE					
OTHER:_____					
TOTAL	63,300		140,676	152,076	51,900

BTU OF GAS SOLD: 1.2207

PRODUCTION OF SULFUR FROM PROCESSING NATURAL GAS: _____ LONG TONS

COMMENTS:
No propane sales this month; propane stock sold off 1/99.
Plant now selling only NGL Mix.

I HEREBY CERTIFY THAT THIS REPORT IS TRUE AND COMPLETE TO THE BEST OF MY KNOWLEDGE.

SIGNATURE: Diane Cerny
Production Analyst I — 4/23/2013
TITLE — DATE

Phone No. (281) 891-1562

APR 2 9 2013

DIV. OF OIL, GAS & MINING

STATE OF UTAH
DIVISION OF OIL, GAS AND MINING

MONTHLY REPORT OF GAS PROCESSING PLANT PRODUCT ALLOCATIONS - FORM 13-B

FACILITY: PINEVIEW GAS PLANT
OPERATOR: CITATION OIL AND GAS CORP.
ADDRESS: 14077 CUTTEN ROAD
HOUSTON, TX 77070-5623

OPERATIONS MONTH/YR: Mar-13

CORRECTED REPORT ( )

WELL OPERATOR	WELL NAME	API NUMBER	METERED WELL VOLUME (MCF)	RESIDUE GAS RETURNED TO FIELD (MCF)	ALLOCATIONS: RESIDUE GAS SOLD (MCF)	ALLOCATIONS: NGLS (GALLONS)
CITATION OIL AND GAS CORP.	BINGHAM 2-1	43-043-30026	3,813	56	2,210	20,486
CITATION OIL AND GAS CORP.	BINGHAM 2-1A	43-043-30125	2,753	41	1,641	15,827
CITATION OIL AND GAS CORP.	BINGHAM 2-6H	43-043-30317	347	5	209	1,444
CITATION OIL AND GAS CORP.	BINGHAM 10-1	43-043-30025	0	0	0	0
CITATION OIL AND GAS CORP.	BINGHAM 1-42-3	43-043-30029	2,705	40	1,578	15,366
CITATION OIL AND GAS CORP.	UPRR 3-2	43-043-30015	1,319	20	730	9,082
CITATION OIL AND GAS CORP.	UPRR 3-6 TWCNG	43-043-30036	8,140	121	4,652	50,903
CITATION OIL AND GAS CORP.	UPRR 3-9	43-043-30151	3,698	55	2,070	22,146
CITATION OIL AND GAS CORP.	UPRR 3-10	43-043-30302	3,041	45	1,742	16,822
CITATION OIL AND GAS CORP.	JUDD 34-1H	43-043-30301	0	0	0	0
TOTALS (TOTAL ONLY IF THIS IS LAST PAGE OF REPORT)			25,816	383	14,832	152,076

COMMENTS:

I HEREBY CERTIFY THAT THIS REPORT IS TRUE AND COMPLETE TO THE BEST OF MY KNOWLEDGE.

SIGNATURE Diane Cerny DATE 23-Apr-13
TITLE Production Analyst I
PHONE NO. - 281-891-1562

APR 29 2013

DIV. OF OIL, GAS & MINING

STATE OF UTAH
DIVISION OF OIL, GAS AND MINING

Revision

MONTHLY REPORT OF GAS PROCESSING PLANT PRODUCT ALLOCATIONS - FORM 13-B

FACILITY: PINEVIEW GAS PLANT
OPERATOR: CITATION OIL AND GAS CORP.
ADDRESS: 14077 CUTTEN ROAD
HOUSTON, TX 77070-5623

OPERATIONS MONTH/YR: Mar-13

CORRECTED REPORT ( )

WELL OPERATOR	WELL NAME	API NUMBER	METERED WELL VOLUME (MCF)	RESIDUE GAS RETURNED TO FIELD (MCF)	ALLOCATIONS: RESIDUE GAS SOLD (MCF)	ALLOCATIONS: NGLS (GALLONS)
CITATION OIL AND GAS CORP.	BINGHAM 2-1	43-043-30026	3,815	56	2,213	20,498
CITATION OIL AND GAS CORP.	BINGHAM 2-1A	43-043-30125	2,753	41	1,641	15,827
CITATION OIL AND GAS CORP.	BINGHAM 2-6H	43-043-30317	347	5	209	1,444
CITATION OIL AND GAS CORP.	BINGHAM 10-1	43-043-30025	0	0	0	0
CITATION OIL AND GAS CORP.	BINGHAM 1-42-3	43-043-30029	2,706	40	1,578	15,372
CITATION OIL AND GAS CORP.	UPRR 3-2	43-043-30015	1,317	20	729	9,069
CITATION OIL AND GAS CORP.	UPRR 3-6 TWCNG	43-043-30036	8,137	121	4,650	50,886
CITATION OIL AND GAS CORP.	UPRR 3-9	43-043-30151	3,699	55	2,070	22,153
CITATION OIL AND GAS CORP.	UPRR 3-10	43-043-30302	3,042	45	1,742	16,827
CITATION OIL AND GAS CORP.	JUDD 34-1H	43-043-30301	0	0	0	0
TOTALS (TOTAL ONLY IF THIS IS LAST PAGE OF REPORT)			25,816	383	14,832	152,076

COMMENTS:

I HEREBY CERTIFY THAT THIS REPORT IS TRUE AND COMPLETE TO THE BEST OF MY KNOWLEDGE.

SIGNATURE Diane Cerny DATE
TITLE Production Analyst I 09-May-13
PHONE NO. - 281-891-1562

RECEIVED
MAY 28 2013
DIV. OF OIL, GAS & MINING

Revision

STATE OF UTAH
DIVISION OF OIL, GAS AND MINING

MONTHLY REPORT OF GAS PROCESSING PLANT PRODUCT ALLOCATIONS - FORM 13-B

FACILITY: PINEVIEW GAS PLANT
OPERATOR: CITATION OIL AND GAS CORP.
ADDRESS: 14077 CUTTEN ROAD
HOUSTON, TX 77070-5623

OPERATIONS MONTH/YR: Mar-13

CORRECTED REPORT ( )

WELL OPERATOR	WELL NAME	API NUMBER	METERED WELL VOLUME (MCF)	RESIDUE GAS RETURNED TO FIELD (MCF)	ALLOCATIONS: RESIDUE GAS SOLD (MCF)	ALLOCATIONS: NGLS (GALLONS)
CITATION OIL AND GAS CORP.	BINGHAM 2-1	43-043-30026	3,815	56	2,213	20,498
CITATION OIL AND GAS CORP.	BINGHAM 2-1A	43-043-30125	2,753	41	1,641	15,827
CITATION OIL AND GAS CORP.	BINGHAM 2-6H	43-043-30317	347	5	209	1,444
CITATION OIL AND GAS CORP.	BINGHAM 10-1	43-043-30025	0	0	0	0
CITATION OIL AND GAS CORP.	BINGHAM 1-42-3	43-043-30029	2,706	40	1,578	15,372
CITATION OIL AND GAS CORP.	UPRR 3-2	43-043-30015	1,317	20	729	9,069
CITATION OIL AND GAS CORP.	UPRR 3-6 TWCNG	43-043-30036	8,137	121	4,650	50,886
CITATION OIL AND GAS CORP.	UPRR 3-9	43-043-30151	3,699	55	2,070	22,153
CITATION OIL AND GAS CORP.	UPRR 3-10	43-043-30302	3,042	45	1,742	16,827
CITATION OIL AND GAS CORP.	JUDD 34-1H	43-043-30301	0	0	0	0
TOTALS (TOTAL ONLY IF THIS IS LAST PAGE OF REPORT)			25,816	383	14,832	152,076

COMMENTS:

I HEREBY CERTIFY THAT THIS REPORT IS TRUE AND COMPLETE TO THE BEST OF MY KNOWLEDGE.

Diane Cerny

SIGNATURE Diane Cerny DATE 09-May-13
TITLE Production Analyst I
PHONE NO. - 281-891-1562

RECEIVED
MAY 22 2013
DIV. OF OIL, GAS & MINING

GARY R. HERBERT
Governor

GREGORY S. BELL
Lieutenant Governor

State of Utah

DEPARTMENT OF NATURAL RESOURCES

MICHAEL R. STYLER
Executive Director

Division of Oil, Gas and Mining

JOHN R. BAZA
Division Director

April 28, 2016

Terry Courter
Citation Oil & Gas Corporation
P. O. Box 690688
Houston, Texas 77269-0688

Subject: Pressure Test for Mechanical Integrity, Bingham 10-1, NWNE Section 10, Township 2 North, Range 7 East, API No. 43-043-30025, Summit County, Utah

Dear Mr. Courter:

The Underground Injection Control Program, which the Division of Oil, Gas, and Mining (DOGM) administers in Utah, requires that all Class II injection wells demonstrate mechanical integrity. Rule R649-5-5.3 of the Oil and Gas Conservation General rules requires that the casing-tubing annulus above the packer be pressure tested at a pressure equal to the maximum authorized injection pressure or 1,000 psi, whichever is lesser, provided that no test pressure is less than 300 psi. This test shall be performed at least every five-year period beginning October 1982. Please make arrangements and ready the Bingham 10-1 well for testing during the week of May 9-13, 2016, as outlined below:

1. Operator must furnish connections, accurate pressure gauges, hot oil truck (or other means of pressuring annulus), along with personnel to assist in opening valves, etc.

2. The casing-tubing annulus shall be filled prior to the test date to expedite testing, and the well will be required to hold pressure for a minimum of 15 minutes.

3. If mechanical difficulties or workover operations make it impossible for the well to be tested at this time the test may be rescheduled.

4. Company personnel should meet a DOGM representative(s) at the field office or other location as negotiated.

5. All bradenhead valves with the exception of the tubing on the injection well must be shut-in 24 hours prior to testing.

Please contact Lisha Cordova at (801) 538-5296 to arrange a meeting time and place or to negotiate a different date, if the date(s) specified is unacceptable.

Sincerely,

Dan Jarvis
Operations Manager

DJJ/LC/js
cc: Lisha Cordova, Petroleum Specialist
Val Meadows, Citation O&G Corp., 3603 E. Chalk Creek Rd, Coalville UT 84017
Well File

STATE OF UTAH
DEPARTMENT OF NATURAL RESOURCES
DIVISION OF OIL, GAS, AND MINING

FORM 9

5.LEASE DESIGNATION AND SERIAL NUMBER: FEE

SUNDRY NOTICES AND REPORTS ON WELLS

Do not use this form for proposals to drill new wells, significantly deepen existing wells below current bottom-hole depth, reenter plugged wells, or to drill horizontal laterals. Use APPLICATION FOR PERMIT TO DRILL form for such proposals.

6. IF INDIAN, ALLOTTEE OR TRIBE NAME:

7.UNIT or CA AGREEMENT NAME:

1. TYPE OF WELL
Water Disposal Well

8. WELL NAME and NUMBER:
BINGHAM 10-1

2. NAME OF OPERATOR:
CITATION OIL & GAS CORP

9. API NUMBER:
43043300250000

3. ADDRESS OF OPERATOR:
14077 Cutten Rd , Houston, TX, 77069

PHONE NUMBER:
281 891-1550 Ext

9. FIELD and POOL or WILDCAT:
PINEVIEW

4. LOCATION OF WELL
FOOTAGES AT SURFACE:
0682 FNL 3279 FWL
QTR/QTR, SECTION, TOWNSHIP, RANGE, MERIDIAN:
Qtr/Qtr: NWNE Section: 10 Township: 02.0N Range: 07.0E Meridian: S

COUNTY:
SUMMIT

STATE:
UTAH

11.
CHECK APPROPRIATE BOXES TO INDICATE NATURE OF NOTICE, REPORT, OR OTHER DATA

TYPE OF SUBMISSION

- ☐ NOTICE OF INTENT
  Approximate date work will start:
- ✓ SUBSEQUENT REPORT
  Date of Work Completion: 5/18/2016
- ☐ SPUD REPORT
  Date of Spud:
- ☐ DRILLING REPORT
  Report Date:

TYPE OF ACTION

☐ ACIDIZE	☐ ALTER CASING	☐ CASING REPAIR
☐ CHANGE TO PREVIOUS PLANS	☐ CHANGE TUBING	☐ CHANGE WELL NAME
☐ CHANGE WELL STATUS	☐ COMMINGLE PRODUCING FORMATIONS	☐ CONVERT WELL TYPE
☐ DEEPEN	☐ FRACTURE TREAT	☐ NEW CONSTRUCTION
☐ OPERATOR CHANGE	☐ PLUG AND ABANDON	☐ PLUG BACK
☐ PRODUCTION START OR RESUME	☐ RECLAMATION OF WELL SITE	☐ RECOMPLETE DIFFERENT FORMATION
☐ REPERFORATE CURRENT FORMATION	☐ SIDETRACK TO REPAIR WELL	☐ TEMPORARY ABANDON
☐ TUBING REPAIR	☐ VENT OR FLARE	☐ WATER DISPOSAL
☐ WATER SHUTOFF	☐ SI TA STATUS EXTENSION	☐ APD EXTENSION
☐ WILDCAT WELL DETERMINATION	✓ OTHER	OTHER: MIT

12. DESCRIBE PROPOSED OR COMPLETED OPERATIONS. Clearly show all pertinent details including dates, depths, volumes, etc.

This well was successfully tested for mechanical integrity on 5/18/2016. A copy of the MIT form is attached.

Accepted by the Utah Division of Oil, Gas and Mining

Date: June 01, 2016

By:

NAME (PLEASE PRINT)	PHONE NUMBER	TITLE
Sara Guthrie	281 891-1564	Regulatory Compliance Coordinator

SIGNATURE	DATE
N/A	5/26/2016

RECEIVED: May. 26, 2016

INSPECTION FORM 6

STATE OF UTAH
DIVISION OF OIL GAS AND MINING

INJECTION WELL - PRESSURE TEST

Well Name: Bingham 10-1 API Number: 43-043-30025

Qtr/Qtr: NWNE Section: 10 Township: 2N Range: 7E

Company Name: Citation Oil & Gas Corp.

Lease: State ____ Fee ✓ Federal ____ Indian ____

Inspector: Lisha Cordova Date: May 18, 2016

* Mountain States Water | Chuck Rees

Initial Conditions: Flow Analyzer 289 AWDW Max. Allowable - 2000 psi

Tubing - Rate: 230ish bpd Pressure: 1020 psi

Casing/Tubing Annulus - Pressure: 0 psi

Conditions During Test:

	Time (Minutes)	Annulus Pressure	Tubing Pressure
10:08	0	1100	1020
10:13	5	1100	780
10:18	10	1100	700
10:23	15	1100	680
	20		
	25		
	30		

Results: Pass/Fail

Conditions After Test:

Tubing Pressure: 680 psi

Casing/Tubing Annulus Pressure: 0 psi

COMMENTS: 53 bbls to fill backside. Valve stem slight drip. Intermittent disposal throughout the day.

Operator Representative

Sundry Number: 71954 API Well Number: 43043300250000

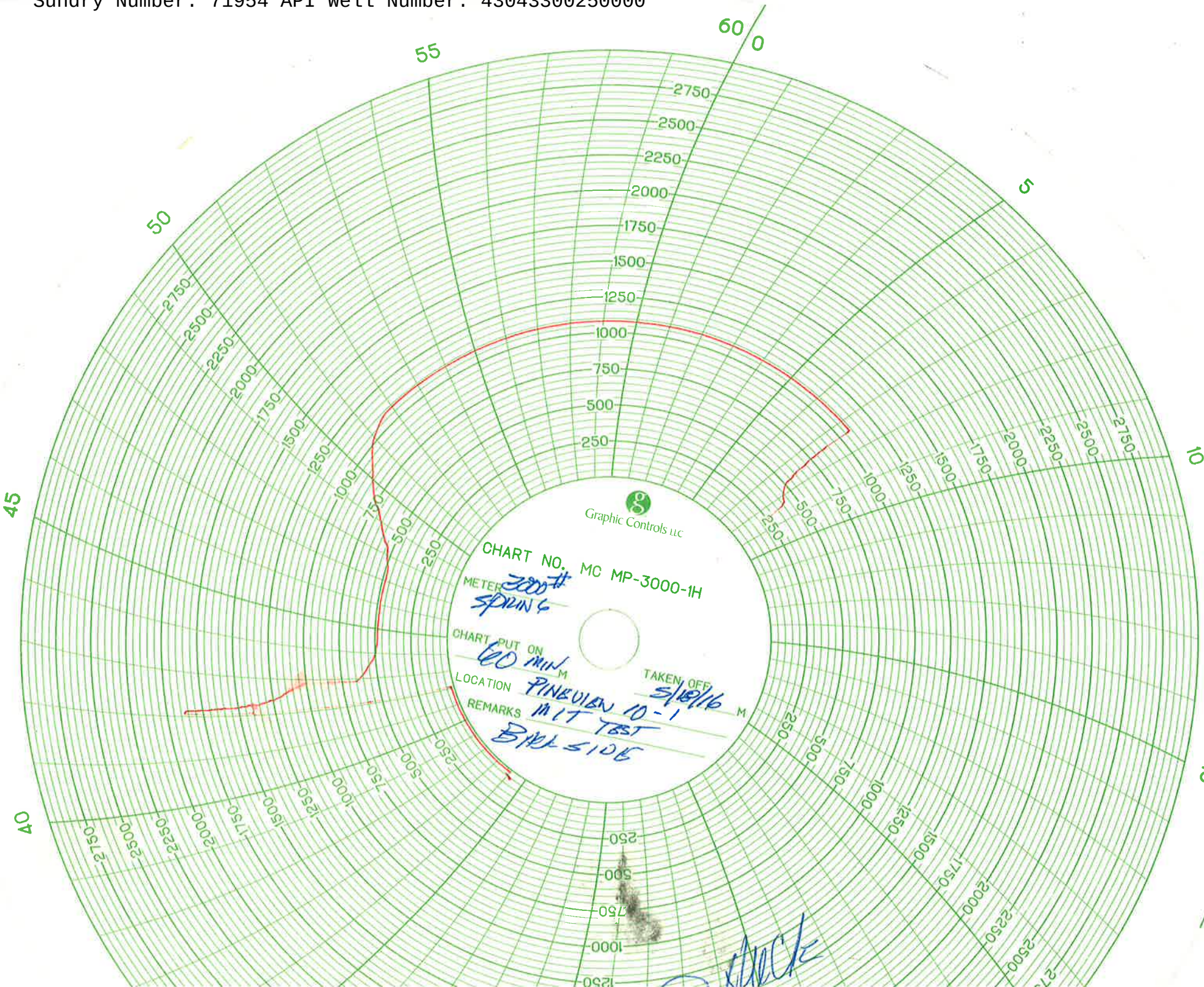

INSPECTION FORM 6

STATE OF UTAH
DIVISION OF OIL GAS AND MINING

INJECTION WELL - PRESSURE TEST

Well Name: Bingham 10-1 API Number: 43-043-30025

Qtr/Qtr: NWNE Section: 10 Township: 2N Range: 7E

Company Name: Citation Oil & Gas Corp.

Lease: State ____ Fee ✓ Federal ____ Indian ____

Inspector: Lisha Cordova Date: May 18, 2016

* Mountain States Water / Chuck Rees

Initial Conditions: Flow Analyzer 289 AWDW Max. Allowable - 2000 psi

Tubing - Rate: 23ole bpd Pressure: 1020 psi

Casing/Tubing Annulus - Pressure: Ø psi

Conditions During Test:

	Time (Minutes)	Annulus Pressure	Tubing Pressure
10:08	0	1100	1020
10:13	5	1100	780
10:18	10	1100	700
10:23	15	1100	680
	20		
	25		
	30		

Results: (Pass)/Fail

Conditions After Test:

Tubing Pressure: 680 psi

Casing/Tubing Annulus Pressure: Ø psi

COMMENTS: 53 bbls to fill backside. Valve stem slight drip. Intermittent disposal throughout the day.

Operator Representative

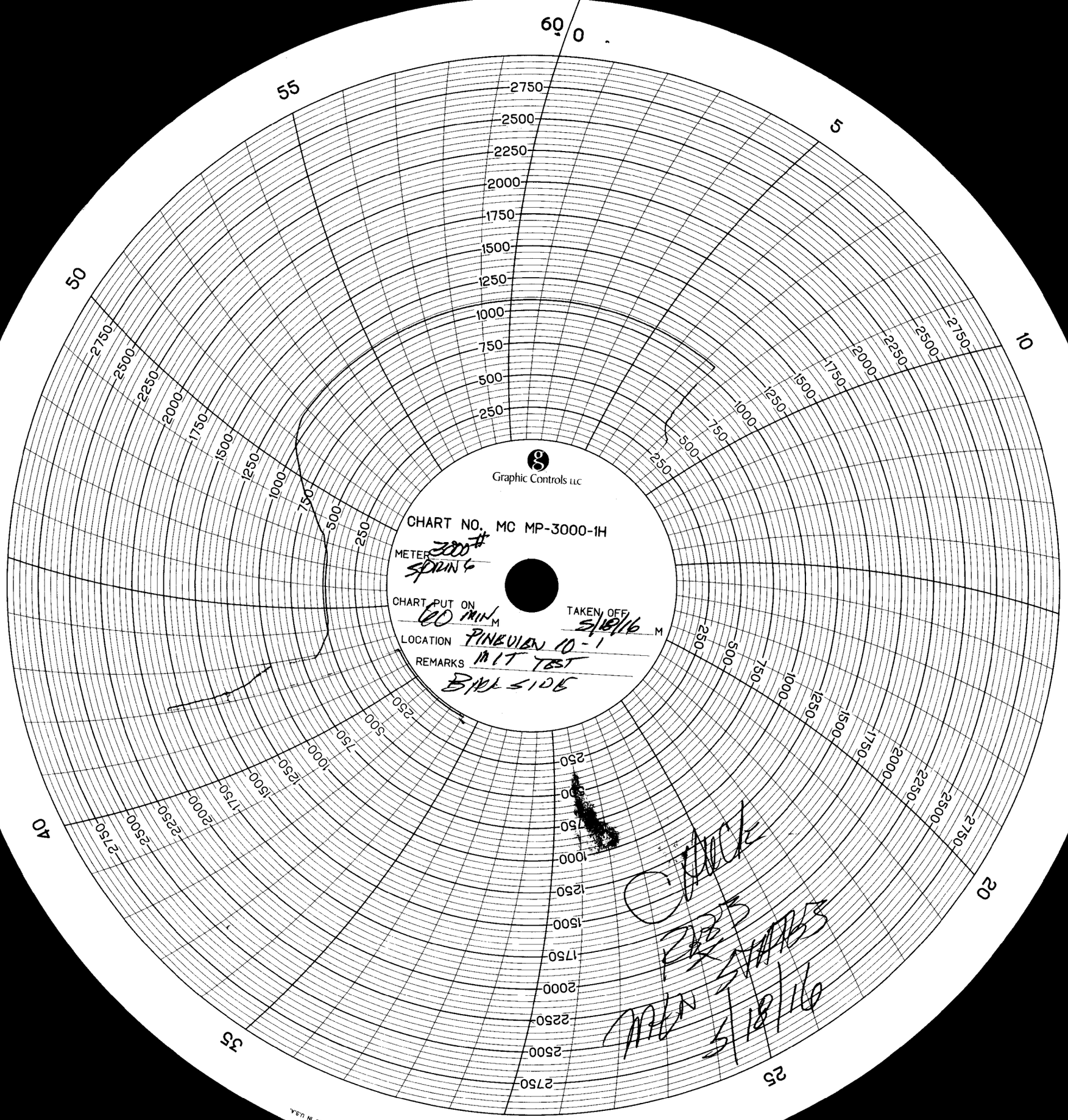
Graphic Controls LLC
CHART NO. MC MP-3000-1H
METER 3000# SPRING
CHART PUT ON 60 MIN M
TAKEN OFF 5/18/16 M
LOCATION PINEVIEW 10-1
REMARKS MIT TEST
BAD SIDE
PASS
5/18/16
PRINTED IN U.S.A.