API Well Number: 43037500430000

STATE OF UTAH
DEPARTMENT OF NATURAL RESOURCES
DIVISION OF OIL, GAS AND MINING

FORM 3

AMENDED REPORT ☑

APPLICATION FOR PERMIT TO DRILL

1. WELL NAME and NUMBER
Tohonadla 35-C

2. TYPE OF WORK
DRILL NEW WELL ■ REENTER P&A WELL ○ DEEPEN WELL ○

3. FIELD OR WILDCAT
TOHONADLA

4. TYPE OF WELL
Oil Well Coalbed Methane Well: NO

5. UNIT or COMMUNITIZATION AGREEMENT NAME

6. NAME OF OPERATOR
NNOGC EXPLORATION & PRODUCTION, LLC

7. OPERATOR PHONE
303 910-9525

8. ADDRESS OF OPERATOR
1625 Broadway, Suite 1000, Denver , CO, 80202

9. OPERATOR E-MAIL
drubenking@nnogc.com

10. MINERAL LEASE NUMBER (FEDERAL, INDIAN, OR STATE)
14-20-603-229

11. MINERAL OWNERSHIP
FEDERAL ○ INDIAN ■ STATE ○ FEE ○

12. SURFACE OWNERSHIP
FEDERAL ○ INDIAN ■ STATE ○ FEE ○

13. NAME OF SURFACE OWNER (if box 12 = 'fee')

14. SURFACE OWNER PHONE (if box 12 = 'fee')

15. ADDRESS OF SURFACE OWNER (if box 12 = 'fee')

16. SURFACE OWNER E-MAIL (if box 12 = 'fee')

17. INDIAN ALLOTTEE OR TRIBE NAME (if box 12 = 'INDIAN')
Navajo

18. INTEND TO COMMINGLE PRODUCTION FROM MULTIPLE FORMATIONS
YES ○ (Submit Commingling Application) NO ■

19. SLANT
VERTICAL ■ DIRECTIONAL ○ HORIZONTAL ○

20. LOCATION OF WELL	FOOTAGES	QTR-QTR	SECTION	TOWNSHIP	RANGE	MERIDIAN
LOCATION AT SURFACE	1130 FNL 1961 FWL	NENW	35	41.0 S	21.0 E	S
Top of Uppermost Producing Zone	1130 FNL 1961 FWL	NENW	35	41.0 S	21.0 E	S
At Total Depth	1130 FNL 1961 FWL	NENW	35	41.0 S	21.0 E	S

21. COUNTY
SAN JUAN

22. DISTANCE TO NEAREST LEASE LINE (Feet)
1961

23. NUMBER OF ACRES IN DRILLING UNIT
2560

25. DISTANCE TO NEAREST WELL IN SAME POOL (Applied For Drilling or Completed)
1052

26. PROPOSED DEPTH
MD: 6800 TVD: 6800

27. ELEVATION - GROUND LEVEL
4668

28. BOND NUMBER
RLB0006712

29. SOURCE OF DRILLING WATER / WATER RIGHTS APPROVAL NUMBER IF APPLICABLE
09-135

Hole, Casing, and Cement Information

String	Hole Size	Casing Size	Length	Weight	Grade & Thread	Max Mud Wt.	Cement	Sacks	Yield	Weight
Cond	20	16	0 - 60	0.0	Unknown	0.0	Unknown	0	0.0	0.0
Surf	12.25	8.625	0 - 1320	24.0	J-55 Casing/Tubing	24.0	Halliburton Light , Type Unknown	315	1.95	12.4
							Unknown	200	1.19	15.6
Prod	7.875	5.5	0 - 6800	17.0	K-55 Casing/Tubing	10.0	Halliburton Light , Type Unknown	510	1.95	15.2
							Unknown	335	1.26	15.2

ATTACHMENTS

VERIFY THE FOLLOWING ARE ATTACHED IN ACCORDANCE WITH THE UTAH OIL AND GAS CONSERVATION GENERAL RULES

- ☑ WELL PLAT OR MAP PREPARED BY LICENSED SURVEYOR OR ENGINEER
- ☑ COMPLETE DRILLING PLAN
- ☐ AFFIDAVIT OF STATUS OF SURFACE OWNER AGREEMENT (IF FEE SURFACE)
- ☐ FORM 5. IF OPERATOR IS OTHER THAN THE LEASE OWNER
- ☐ DIRECTIONAL SURVEY PLAN (IF DIRECTIONALLY OR HORIZONTALLY DRILLED)
- ☑ TOPOGRAPHICAL MAP

NAME Lauren Germinario **TITLE** Land Manager **PHONE** 303 538-8300

SIGNATURE **DATE** 01/07/2013 **EMAIL** lgerminario@nnogc.com

API NUMBER ASSIGNED
43037500430000

APPROVAL
Permit Manager

RECEIVED: January 16, 2013

NNOGC Exploration and Production LLC
Tohonadla 35-C
1130' FNL & 1961' FWL
Sec. 35, T. 41 S., R. 21 E.
San Juan County, Utah

Drilling Program

1. FORMATION TOPS

The estimated tops of important geologic markers are:

Formation	GL Depth	KB Depth	Elevation
Carmel Sandstone	0'	10'	+4,668'
Navajo Sandstone	243'	253'	+4,425'
Kayenta Sandstone	618'	628'	+4,050'
Wingate Sandstone	643'	653'	+4,025'
Chinle Shale	1,063'	1,073'	+3,605'
Shinarump Sandstone	1,728'	1,738'	+2,940'
Moenkopi Sand & Mud Stones	1,828'	1,838'	+2,840'
Cutler Slts/Ss/Shale	1,998'	2,008'	+2,670'
Hermosa Group	4,088'	4,098'	+580'
Ismay Ls/Dolo/Marls/Shale	4,918'	4,928'	-250'
Lower Ismay Ls/Dolo/Marls/Shale	4,993'	5,003'	-325'
Paradox	5,093'	5,103'	-425'
Gothic Shale	5,108'	5,118'	-440'
Desert Creek Ls/Dolo/Marls/Shale	5,128'	5,138'	-460'
Akah Ls/Dolo/Anhy/Shale	5,283'	5,293'	-615'
Barker Creek Ls/Dolo/Anhy/Shale	5,418'	5,428'	-750'
Pinkerton Trail Ls/Dolo/Anhy/Shale	5,668'	5,678'	-1,000'
Molas Mudst/Slt/Ls/Shale	5,868'	5,878'	-1,200'
Leadville Limestone/Dolomite	5,993'	6,0003'	-1,325'
Total Depth (TD)	6,800'	6,815'	-2,132'

2. NOTABLE ZONES

Desert Creek and Ismay oil production are the primary goals. Any oil and gas

show which appears to the well geologist to be commercial will be tested. All fresh water and prospectively valuable minerals will be recorded by depth and protected with casing and cement. Likely fresh water zones are the Glen Canyon group of sandstones.

3. PRESSURE CONTROL

A 13-5/8" 3,000 psi double ram and annular preventer with a 3,000 psi choke manifold will be used. A diagram of a typical BOP is on Page 3. Actual model will not be known until bid is let. Procedures are ...

- Nipple up BOP and all equipment
  - Test to 250 #/3,000#
  - Test Hydril to 2,000 psi
  - Log in I. A. D. C. book
- Drill 1/2 of shoe joint
  - Test to 1,500 psi for 30 minutes
  - Log in I. A. D. C. book
- Activate BOPs every 24 hours or on trips and log in I. A. D. C. book
- Install hand wheels and lay straight flare line before drilling out
- Conduct weekly BOP drills with each crew and log in I. A. D. C. book
- Have floor valve and wrench on floor at all times
  - Floor valve must be in open position
- Before drilling surface casing shoes, blind rams will be closed. BOP and surface casing will be pressure tested to 1,500 psi for a total test time of 30 minutes if not previously tested during cement job.
- Studs on all well head and BOP flanges will be checked for tightness weekly
- Hand wheels for locking screws will be installed and operational
- Entire BOP and well head assembly will be kept clean of mud
- A drill stem safety valve in the open position will be available
- Call Farmington BLM at 505 ~~599-8900~~ 564-7600 and the Utah Division of Oil, Gas, & Mining at 801 538-5340 before testing BOPs

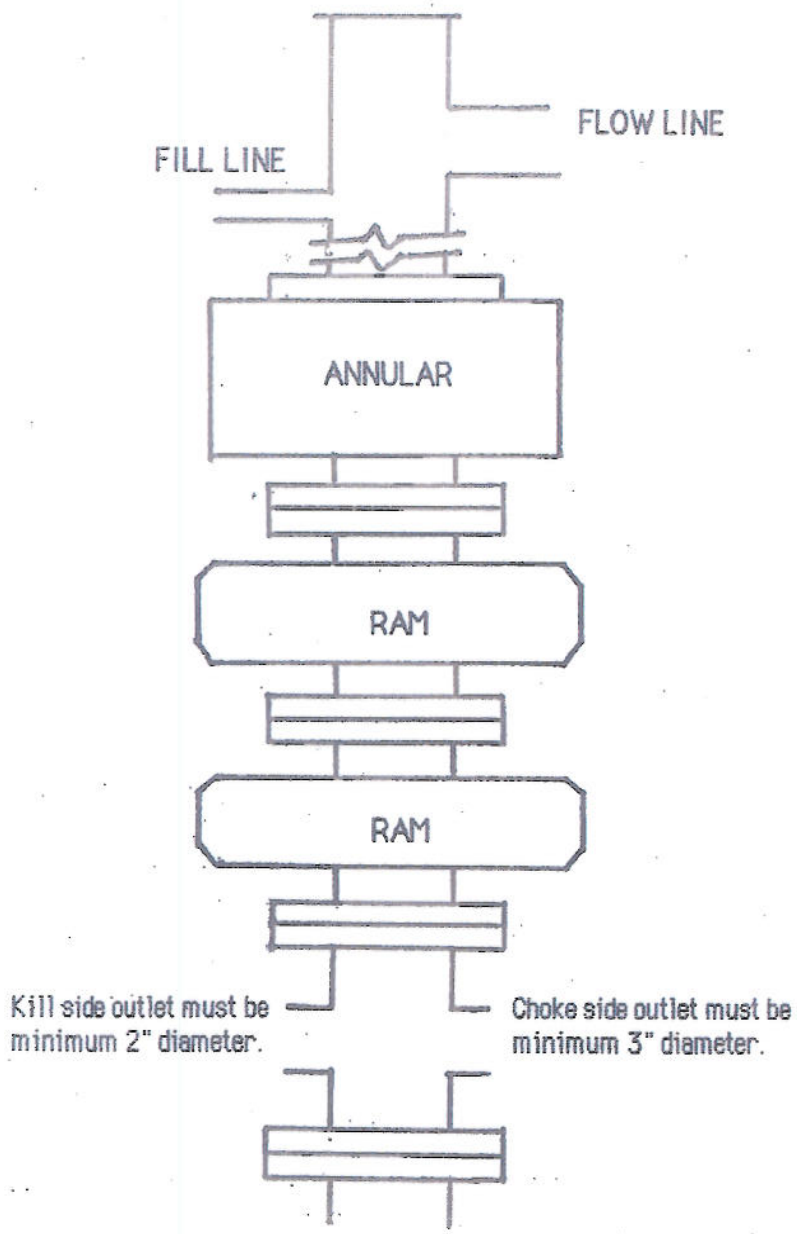

Kill line will be minimum 2" diameter and have 2 valves, one of which shall be a minimum 2" check valve.

TYPICAL BOP STACK
& CHOKE MANIFOLD

There will be at least 2 chokes and 2 choke line valves (3" minimum). The choke line will be 3" in diameter. There will be a pressure gauge on the choke manifold.

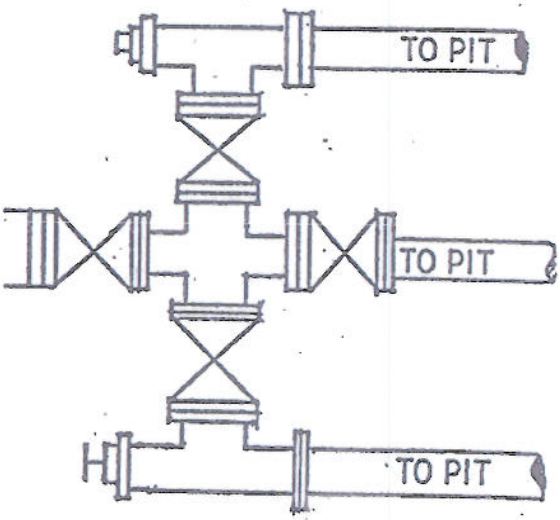

Upper kelly cock will have handle available.
Safety valve and subs will fit all drill string connections in use.
All BOPE connections subjected to well pressure will be flanged, welded, or clamped.

4. CASING & CEMENT

Hole Size	O. D.	Weight	Grade	Age	Coupling	Burst/Collapse	Depth Set
20"	16"		Conductor	New			60'
12-1/4"	8-5/8"	24#	J or K-55	New	S T & C	2,950/1,370	1,320'
7-7/8"	5-1/2"	17#	J or K-55	New	L T & C	5,320/4,910	6,800'

Conductor pipe will be cemented to the surface with ready-mix.

Surface casing will be cemented to the surface with ≈50% excess. Lead with ≈315 sacks (≈614 cubic feet) Halliburton light with 5 pounds per sack gilsonite + 1/4 pound per sack cellophane mixed at 12.4 pounds per gallon and 1.95 cubic feet per sack. Tail with ≈195 sacks (≈232 cubic feet) standard cement + 1% $CaCl_2$ + 1/4 pound per sack cellophane mixed at 15.6 pounds per gallon and 1.19 cubic feet per sack. Centralizers will be placed ≈5' off the bottom and on the first three joints and the fifth joint.

Production casing will be cemented with ≈40% excess to ≈1,100' (i. e., ≥200' above surface casing shoe). Lead with ≈505 sacks (≈984 cubic feet) Halliburton light with 5 pounds per sack gilsonite + 1/4 pound per sack cellophane mixed at 12.4 pounds per gallon and 1.95 cubic feet per sack. Tail with ≈310 sacks (≈390 cubic feet) premium with 5 pounds per sack gilsonite + 0.6% Halad 9 + 0.25 CFR-3 mixed at 15.2 pounds per gallon and 1.26 cubic feet per sack. Centralizers will be set on the shoe joint, top of the second and third joints, and continue through and above pay zones at ≈90' intervals.

5. MUD PROGRAM

Interval	Weight	Viscosity	Fluid Loss	Type
0 -1,320'	8.3 - 8.7	27 - 32	N/C	Fresh H_2O gel lime spud mud, pH 9
1,320' - TD	8.4 - 10.0	38 - 40	8 cc	Fresh water gel & PHPA, SAPP, etc.

Cuttings will be collected every ≈30' from the surface to ≈4,800'. Cuttings will be collected every ≈10' from ≈4,800' to TD.

6. CORES, LOGS, & TESTS

Cores may be cut depending upon shows, most likely in the Desert Creek. GR - Sonic and DLL-Micro-SFL log suites will be run from TD to the surface. FDC-CNL logs will be run from TD to ≈4,000'. No drill stem tests are currently planned.

A geologist or mud logger will be on site from ≈4,000' to TD.

7. DOWN HOLE CONDITIONS

No abnormal temperatures or abnormal pressures are expected. Maximum expected bottom hole pressure will be ≈2,944 psi. Hydrogen sulfide is expected in the Mississippian. A contingency plan is attached.

8. OTHER INFORMATION

The anticipated spud date is March 1, 2012. It is expected it will take ≈3 weeks to drill and ≈2 weeks to complete the well.

Surface Use Plan

1. DIRECTIONS (See PAGES 11 - 13)

From the junction of US 163 and US 191 west of Bluff ....
Go South 7-1/2 miles on US 191 to the equivalent of mile post 13.8*
Then turn left and go Northeast 1/2 mile on dirt County Road 441
Then turn left and go North 1/5 mile on dirt County Road 4181
Then turn left and go West 250 yards on a dirt County Road 4181
Then turn R after the battery onto the approved, but not yet built, 35-F pad
Then go North ≈500 yards on the approved, but not yet built, 35-B road
Then turn left and go West cross country 790.05' to the planned pad

*The junction of US 191 & County Road 441 is 18.6 miles north of US 160.

Roads will be maintained to at least equal to their present condition.

2. ROAD WORK (See PAGES 12 & 13)

The 790.05' of new road will comply with BLM Gold Book standards. Road will be crowned and ditched with a ≈14' wide running surface. It will be rocked where needed. No culvert, vehicle turn out, or cattle guard is needed. Upgrading is discussed in the approved 35-B APD. Maximum disturbed width will be 20'. Maximum cut or fill = 4'. Maximum grade = 2%.

3. EXISTING WELLS (See PAGE 14)

There are 4 oil wells, 6 plugged wells, and 1 water well within a mile radius. There are no gas or injection wells within a mile radius.

4. PROPOSED PRODUCTION FACILITIES (See PAGES 12 & 13)

A well head and gas powered pump will be installed on the pad. Both will be painted a flat Carlsbad tan. A 790.05' long ≈4" O. D. buried pipeline will be laid east to the approved, but not yet built, Tohonadla 35-B pipeline. Maximum land use width will be 40', which will include all of the new road.

5. WATER SUPPLY

Water will be trucked from Monument Resources' well on private land in 30-40s-22e near Bluff. Water right number is 09-135.

6. CONSTRUCTION METHODS & MATERIALS (See PAGES 15 - 17)

The top 6" of soil and brush will be stripped and stockpiled east of the pad. The pit subsoil will be piled east of the pit and separate from the topsoil. A diversion ditch will be cut on the north and east sided of the pad. A minimum 12 mil plastic liner will be installed in the reserve pit. The reserve pit will be fenced sheep tight on 3 sides with woven wire fence topped with barbed wire. The fourth side will be fenced once the rig moves off. The fence will be kept in good repair while the pit dries. Once dry, contents of the reserve pit will be buried in place.

Rock will be bought and trucked from private land near Bluff.

7. WASTE DISPOSAL

All trash will be placed in a portable trash cage and hauled to the county landfill. Human waste will be disposed of in chemical toilets. Toilet contents will be hauled to a state approved dump station off the reservation.

8. ANCILLARY FACILITIES

There will be no air strip or camp. Camper trailers will be parked on the pad for the company man, tool pusher, and mud logger.

9. WELL SITE LAYOUT

See PAGES 15 - 17 for drawings of the well pad, cross section, cut and fill diagram, reserve pit, trash cage, access onto the location, parking, living facilities, and rig orientation.

10. RECLAMATION

Reclamation starts once the reserve pit is dry, at which point it will be back filled. Liner top will be folded over contents and covered with ≥24" of dirt. The reserve pit and any pad areas not needed for producing the well will be reclaimed as an interim measure. Once the well is plugged, the remainder of the pad and road will be reclaimed.

All reclamation will leave the terrain with a natural shape, slopes will be no steeper than 3 to 1, subsoil will be used to fill the reserve pit, all compacted areas will be ripped ≥12" deep with the contour, topsoil will be spread across all compacted areas and harrowed with the contour.

A seed mix will be drilled as prescribed by BLM, BIA, or the Navajo Nation. Weeds will be controlled in accordance with BLM, BIA, or Tribal requirements.

11. SURFACE OWNER

All construction will be on lease and on Navajo Tribal trust surface. Tribal Project Review Office phone is (928) 871-6447. Address is P. O. Box 2249, Window Rock, Arizona, 86515. Land use will be:

well site: 205' x 270' = 1.27 acres
+ road & pipeline: 40' x 790.05' = 0.73 acres
total = 2.00 acres

12. OTHER INFORMATION

Blue Mountain Hospital is a ≈3/4 hour drive away in Blanding at 802 South and 200 West. Hospital phone number is (435) 678-3993.

Bertha Spencer (BIA), Racheal Dahozy (NNOGC), Pam Kyselka (Navajo Natural Heritage Program), Marcella Martinez (BLM), Gerald Huddleston (Huddleston Land Surveying), and Charles Black (Permits West) conducted an on site inspection on October 5, 2011.

13. REPRESENTATION & CERTIFICATION

I hereby certify that I, or someone under my direct supervision, have inspected the drill site and access route proposed herein; that I am familiar with the conditions which currently exist; that I have full knowledge of state and Federal laws applicable to this operation; that the statements made in this APD package are, to the best of my knowledge, true and correct; and that the work associated with the operations proposed herein will be performed in conformity with this APD package and the terms and conditions under which it is approved. I also certify that I, or the company I represent, am responsible for the operations conducted under this application. These

statements are subject to the provisions of 18 U. S. C. 1001 for the filing of false statements. Executed this 14th day of November, 2011.

Brian Wood, Consultant
37 Verano Loop, Santa Fe, NM 87508
(505) 466-8120

The field representative will be:

John Hatch
NNOGC Exploration and Production LLC
1675 Broadway, Suite 1100
Denver, CO 80202
(303) 534-8300

API Well Number: 43037500430000

Well Location Plat

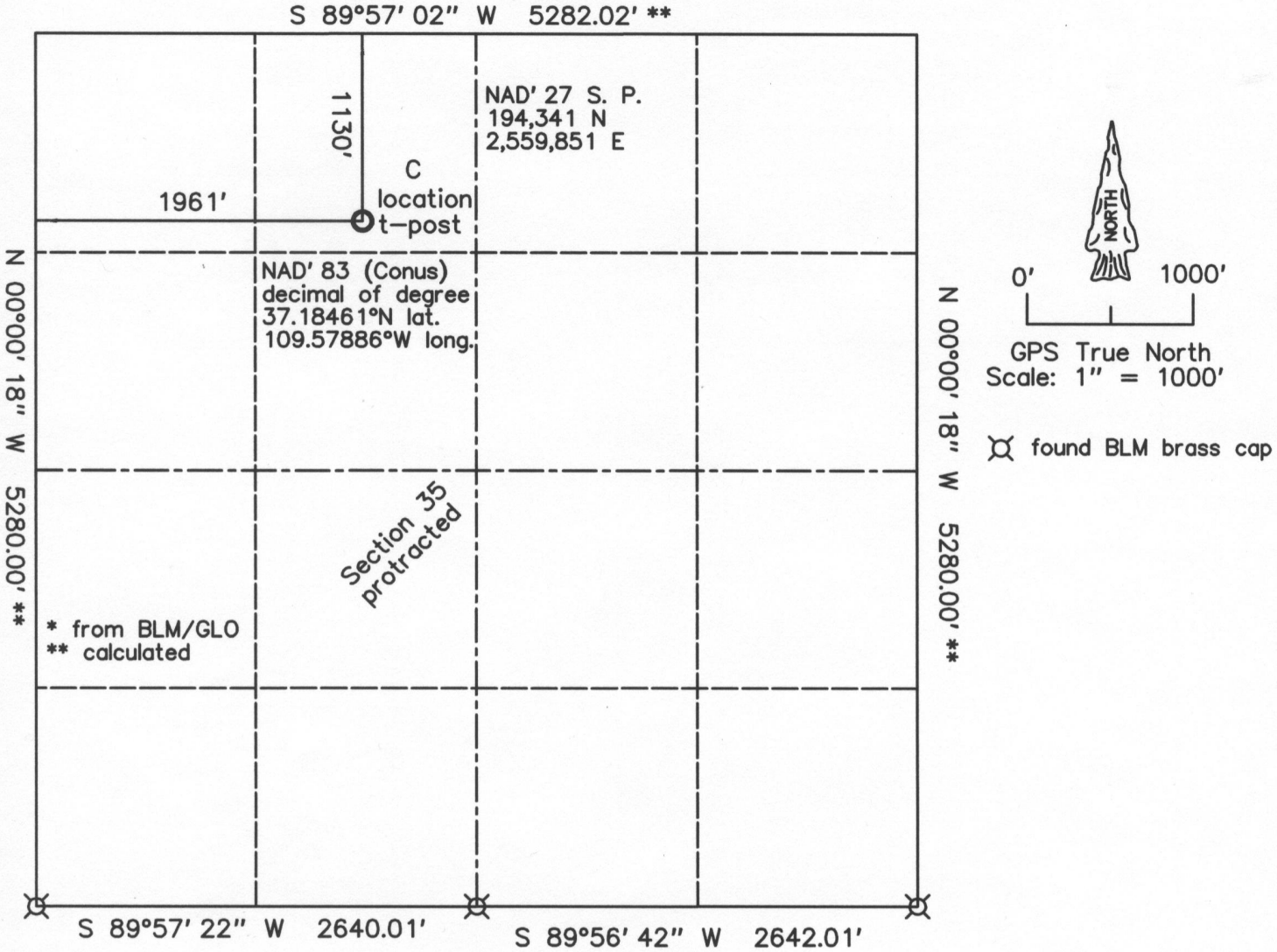

Location Description –
NNOGC Exploration and Production LLC
Tohonadla 35–C
1130' FNL & 1961' FWL
Section 35, T.41 S., R.21 E., SLM
4668' ground elevation NAVD' 88
San Juan County, UT

REGISTERED LAND SURVEYOR
GERALD G. HUDDLESTON
No. 161297
STATE OF UTAH

The above and plat is correct to my knowledge and belief
Utah Land Surveyor 161297.

date: 07/21/2011

HUDDLESTON LAND SURVEYING – POD KK, CORTEZ, CO 81321 – 970 565 3330

RECEIVED: January 07, 2013

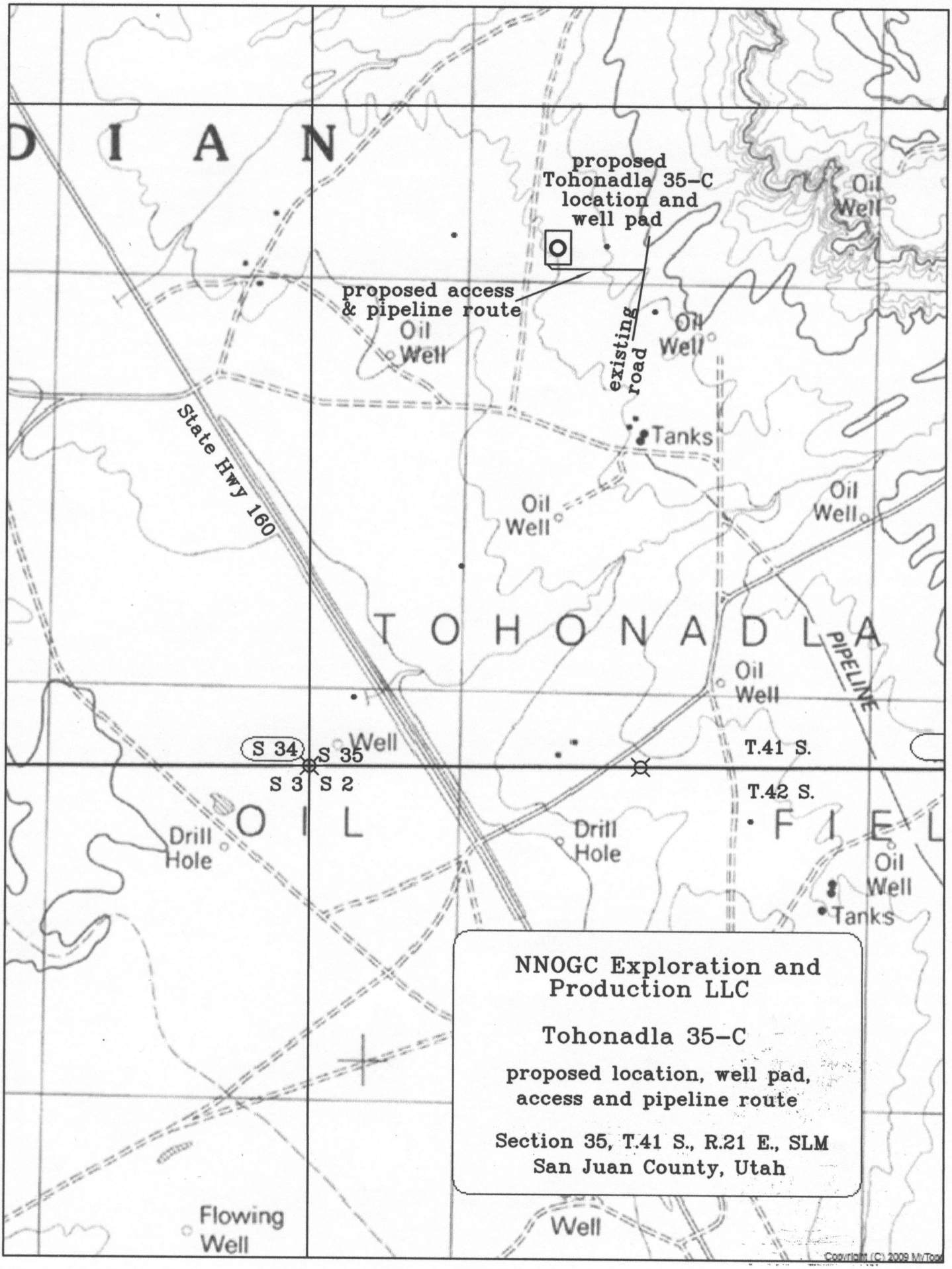

RECEIVED: January 07, 2013

API Well Number: 43037500430000

TOHONADLA FIELD-WIDE
HYDROGEN SULFIDE (H_2S) CONTINGENCY PLAN

NNOGC EXPLORATION AND PRODUCTION, LLC

BLM LEASE NUMBERS:

14-20-603-229

&

14-20-603-270

San Juan County, Utah

Navajo Nation Oil & Gas Company, Inc.
Post Office Box 4439
Window Rock, Arizona 86515

Prepared For:

Prepared By:

PERMITS WEST, INC.
PROVIDING PERMITS for LAND USERS
37 Verano Loop, Santa Fe, New Mexico 87505 (505) 466-8120

RECEIVED: January 07, 2013

API Well Number: 43037500430000

TABLE OF CONTENTS

CHECKLIST FOR DRILLING, WORK OVER, AND MAINTENANCE IN H_2S ENVIRONMENT 1

1.0 GENERAL BACKGROUND 2

1.1 DESCRIPTION OF HYDROGEN SULFIDE GAS 2
1.2 TOXICITY 2
1.3 H_2S FIRST-AID AND TREATMENT PROCEDURES 2

2.0 HYDROGEN SULFIDE H_2S CONTINGENCY PLAN 3

2.1 INTRODUCTION 3
2.2 PURPOSE 3
2.3 OPERATING PROCEDURES 3
2.3.1 Safety Equipment 4
2.3.2 Safety Procedures 4
2.3.3 Working Conditions 6
2.4 H_2S EMERGENCY PROCEDURES 6
2.4.1 Incident 6
2.4.2 Primary Emergency Procedure 6
2.4.3 Secondary Emergency Procedure 6
2.4.4 Igniting the Well 8

3.0 APPENDICES 8

3.1 CHECK LIST FOR SAFETY EQUIPMENT (DESIGNED FOR A MAXIMUM OF 11 PEOPLE) 8
3.2 EMERGENCY PHONE NUMBERS 9

LIST OF FIGURES

Figure 1. Example well pad diagram from Toho 1D APD with wind socks and Safety Briefing Areas. 12

Figure 2. Example well diagram with original topography, wind socks, and Safety Briefing Areas. 13

Figure 3. H_2S Contingency Plan Map: Tohonadla Field-Wide with 2-mile buffer, contact names, and phone numbers. 14

RECEIVED: January 07, 2013

CHECKLIST FOR DRILLING, WORK OVER, AND MAINTENANCE IN H_2S ENVIRONMENT

1. Two safety briefing areas at least 100 yards from well head and arranged so that one briefing area will be upwind at all times. These sites should be located uphill whenever possible (see individual Applications for Permit to Drill [APDs] for topographic maps).
2. Identify direction of prevailing winds (see individual APDs).
3. At least two wind socks installed at all times on opposite sides of the pad.
4. Primary and secondary emergency escape routes (flagged trail minimum).
5. Number, types, and storage location of H_2S emergency respirators for personnel, and number of personnel to be present onsite at any one time.
6. H_2S detector locations (3 minimum to include cellar or bell nipple, and mud tanks at shale shaker). Type and location of visual and audible alarms to be used.
7. H_2S evacuation and emergency training procedures and schedule (i.e., Contingency Plan).
8. List of area residents within a two-mile radius, evacuation plan, and contact list (including agencies and individuals).
9. Types and quantities of mud additives and scavengers to be available at location for H_2S operations.
10. Design features and operational procedures to be used to provide safe working environment (including a certification by the operator on individual APDs that all equipment meets standards for H_2S service).
11. Appropriate warning signs and flags on all access roads.
12. Provisions for blocking and monitoring access to location during a critical incident.
13. Ventilation fan under rig floor.
14. In event of uncontrolled blowout, designation of local official who has authority to ignite flow.
15. Swabbing or drill stem fluids containing H_2S should be put through a separator to permit flaring of gas. Flare should have a continuous pilot light to ensure ignition of all such gas.

RECEIVED: January 07, 2013

API Well Number: 43037500430000

1.0 GENERAL BACKGROUND

1.1 DESCRIPTION OF HYDROGEN SULFIDE GAS

Hydrogen Sulfide (H_2S) is a colorless, transparent gas with a distinct and characteristic rotten-egg odor at low concentrations and not detectable by odor at high concentrations. H_2S at higher concentrations and/or over longer periods of exposure paralyzes the olfactory sense for that specific odor. The gas is extremely toxic to humans and can easily become dangerous and lethal. Extreme care and caution is needed to prevent injury and/or death. H_2S has a specific gravity of 1.192 which is heavier than air. It tends, therefore, to accumulate in low places and depressions. This collection of gas can lead to dangerous concentrations in areas such as arroyos and drainages. H_2S from "down hole" is often warmer than surface air and will therefore tend to rise and therefore affect workers above the escaping source. Hydrogen Sulfide is explosive and water soluble.

1.2 TOXICITY

American National Standards Institute (ANSI) standard: Z37.2-1972 Acceptable Concentrations of Hydrogen Sulfide describes H_2S toxicity in this way: Hydrogen Sulfide is an extremely toxic and irritating gas. Free hydrogen sulfide in the blood reduces its oxygen-carrying capacity, thereby depressing the nervous system. Hydrogen sulfide is oxidized quite rapidly to sulfates in the body, therefore no permanent after effects occur in cases of recovery from acute exposures unless oxygen deprivation of the nervous system is prolonged. There is no evidence that repeated exposures to hydrogen sulfide result in accumulative or systemic poisoning. Effects such as eye irritation, respiratory tract irritation, slow pulse rate, lassitude, digestive disturbances, and cold sweats may occur, but these symptoms disappear in a relatively short time after removal from the exposure. Odors become detectable in concentrations as low as .008 parts per million (ppm), but the sense of smell is lost after 2-15 minutes at 100 ppm.

1.3 H_2S FIRST-AID AND TREATMENT PROCEDURES

- Victim should be removed to fresh air immediately**
- If victim is not breathing, rescue breathing or artificial breathing should be started immediately
- Treat for shock; keep victim warm and comfortable
- Call ambulance and/or doctor, take victim immediately to emergency room or other healthcare facility

*****The rescuer(s) should always wear personal protective equipment when attempting to rescue a H_2S victim. It is important to never increase the number of victims unnecessarily during a H_2S emergency.***

RECEIVED: January 07, 2013

API Well Number: 43037500430000

2.0 HYDROGEN SULFIDE H_2S CONTINGENCY PLAN

2.1 INTRODUCTION

This plan provides required procedures to be followed to adequately provide for a safe H_2S working environment. These required procedures include safety procedures, precautionary measures, and training for emergency and standard procedures. This document sets forth the responsibilities of the operator and all individuals and entities under employment or contract with the operator working in a sour oil or gas (H_2S) area.

To make this H_2SContingency Plan effective, and in order to provide a safe working environment, cooperation from all individuals is a necessity. To this end, each person onsite at an individual well must understand normal and emergency operating procedures for that particular site (See individual APDs for additional information). Each person at an individual site must have adequate information, training, and practice with the specific procedures described in this Contingency Plan, coupled with the information found in the individual well's APDs. It is the responsibility of the operator to provide adequate equipment, training, and procedures, and the individual worker's responsibility to participate fully in all H_2S procedures, to familiarize themselves with the location of all safety equipment and features, and to keep equipment and procedures in working order and up to date.

In order for NNOGC to provide a safe working environment for all workers and individuals in the vicinity of the individual wells, safeguards are put in place. **Initiative lies with each and every individual for the safety of all. To this end the drilling foreman is required to, and will enforce all safety procedures, for the benefit of all involved.**

2.2 PURPOSE

It is the intention of NNOGC to provide a safe working environment for all neighbors, employees, contractors, and others involved with, or in the vicinity of the well being drilled. There exists the possibility of encountering toxic H_2S gas during the drilling, completion, maintenance, and production of individual wells in the Tohonadla Field. This H_2S contingency plan will be put into effect after surface casing is drilled in any individual well, or when it is deemed necessary by the BLM in consultation with NNOGC.

Safety procedures are established for each person's safety connected with the operation, and for the safety of the residents of the local area. There are two separate houses (Rita & Benny Stash and Ken Black) closest to NNOGC wells, each being ≈680 feet west of two different wells (2 Bravo & 2G).

The NNOGC foreman will strictly enforce these procedures. Noncompliance may result in loss of pay or dismissal from the site, job, or employment.

2.3 OPERATING PROCEDURES

Before this H_2S Contingency Plan is operational, all personnel that are to be involved in the operation will be thoroughly trained* in the proper use of breathing apparatus [i. e. Self-Contained Breathing Apparatus (SCBAs) and Escape Units], emergency procedures, and H_2S first-aid and rescue methods. An approved list of trained personnel will be supplied by the safety company and stored with the drilling foreman at each individual site.**

** Required training for operation personnel will include, but not be limited to, H_2S safety course from an approved training company, safety briefing on drill site of all safety equipment use and locations before the start of work for each and every person*

RECEIVED: January 07, 2013

onsite, safety-related training in-place, onsite 1,000 feet before the first H_2S formation.

*** Throughout this Contingency Plan, breathing apparatus shall be understood as:*

a) A Self-Contained Breathing Apparatus (SCBA) manufactured by a credible safety equipment manufacturer such as Scott Industrial c100 or similar.

b) Or an emergency Escape Unit such as the Scott SCRAM or Elsa (or similar) often referred to as hip packs, hoods, or pony bottles.

The two types of breathing apparatus will be differentiated as a SCBA or an Escape Unit as required.

2.3.1 SAFETY EQUIPMENT

Personal H_2S Monitors - Every person at the site will be required to wear a personal H_2S monitor at all times while onsite. Monitors will not be worn on hard hats, but should be worn on the waist belt or preferably near the chest in-front.

Breathing Apparatus - All personnel on the drill site will be assigned an individual breathing apparatus unit. This may be either an escape unit or a SCBA unit. A minimum of two SCBA type units will be onsite. These units will be used by the team whose duty it is to serve as the onsite rescue team.

Monitoring and Recording Devices - An experienced safety company (such as DXP Safety Alliance, Farmington, NM) will be responsible for the installation and monitoring of H_2S detectors placed onsite. These units will be tested and recalibrated as the safety company requires. If H_2S is detected, the monitors will be tested and recalibrated at least every 12 hours. This monitoring system may or may not be integral to the required two-stage alarm system onsite. This two stage system (visual and audio) will have a minimum of three H_2S detector locations. Monitors will be located as follows: 1) in the cellar or on the bell nipple, 2) at the mud tanks' shale shaker, and 3) to be determined by the safety company. Visual (light) and audio (siren) alarms will activate when H_2S concentrations reach 10 ppm.

First-Aid and Rescue Equipment - Stored onsite, but ideally up-hill and up-wind from H_2S sources a minimum of one "rescue pack" will contain at least:

- 1 backboard, straps, head blocks
- a set of cervical collars (small to extra-large)
- 1 bag valve mask
- 1 bottle of oxygen
- gauze and other standard first-aid items

--Suggested: 1 Automatic External Defibrillator (AED)

Gas Monitor - An appropriate monitor should be onsite that can measure for Lower Explosive Limit (LEL), Volatile Organic Compounds (VOCs), and other explosive or hazardous gases.

2.3.2 SAFETY PROCEDURES

Cascade System - Every person required to perform duties within "safety zones" (see list below) will be provided with breathing equipment attached to a cascade air system. These areas are as follows

- rig floor
- mud pit

RECEIVED: January 07, 2013

- derrick
- shale shaker
- mud hopper and bulk hopper
- all hazardous locations will be accessible by hose and work pack (SCBA)

Escape Routes - Two escape routes will be flagged at a minimum and kept clear at all times.

Safety Briefing Areas – The NNOGC Foreman will establish two safety briefing areas located at the end of escape routes (see above). The Foreman will use best judgment along with information from individual well APDs to locate briefing areas that will be clearly marked, with at least one briefing area located uphill. One safety briefing area will always be upwind. Refer to specific maps and diagrams available in individual well's APDs for information helpful in establishing two Safety Briefing Areas. Figures 1 and 2 provide examples of Safety Briefing Areas placement.

Safety, first-aid, and rescue equipment – Safety, first-aid, and rescue equipment will be properly stored onsite using best practices. This will include proper maintenance and scheduled testing, inspection, and training/practice using safety equipment and methodologies.

Service companies - All service companies will be briefed regarding potential hazards of the individual well site including the presence (or potential for) H_2S. These companies will be required to provide breathing apparatus and training to their employees. No service company personnel will be allowed onsite without meeting these requirements. In addition, a safety briefing under the direction of the drill foreman regarding site specific H_2S procedures will be provided to each new personnel member reporting onsite.

Drills and practice - Drills reviewing all and any safety procedures including evacuation, rescue, and proper procedures to shut-in a well, and identify source of H_2S in instance of a leak will be practiced under the supervision of the safety company representative and company foreman. Proper use of breathing apparatus will be instructed during such drills. Drill schedule will be designed to familiarize new personnel with all safety procedures. Each crew should also be familiar with all operations. Drills would include a short work period in safety equipment.

Warning Signs - Warning signs will be posted at all access roads (See examples in Figures 1 and 2). "No smoking" signs will be posted at access points as well. Signs will be posted more than 200 feet and no more that 500 from well pad. When H_2S is present at 10 ppm or greater, a red flag shall be displayed on the warning sign. Gates, road barricades, and/or gate guards will be used if necessary to prevent access during critical or hazardous situations.

Wind Socks - A minimum of two windsocks will be installed at locations easily observable from all work areas on opposing sides of the pad (see examples in Figures 1 and 2). Specific wind sock locations for each site will be identified by the company foreman to allow easy visibility for all workers. If more than two windsocks are needed in order to allow "workers" to easily identify the wind direction at all times, more wind socks will be installed.

Vehicle Parking - Vehicles should be parked at least 200 feet from a well site with their noses pointing away from the well site. Preferably, vehicles will be located uphill and upwind from the well along the escape route. Vehicle parking areas for each site will be evaluated and located by the company foreman.

Testing Fluids - Swabbing and testing fluids containing H_2S will be passed through a separator to permit flaring of the gas. There will be a continuous pilot light in such instances to completely flare subject gases.

RECEIVED: January 07, 2013

Bug Blowers - Explosion proof electric fans will circulate air to all critical locations when necessary.

Drills reviewing any safety procedures including evacuation, rescue, and proper procedures to shut-in a well, and identify source of H_2S in instance of a leak, will be practiced under the supervision of the safety company representative and company foreman. Proper use of breathing apparatus will be instructed during such drills. Drill schedule will be designed to familiarize new personnel with all safety procedures. Each crew member should also be familiar with all operations. Drills should include a short work period in safety equipment.

2.3.3 WORKING CONDITIONS

Occupational Safety and Health Administration (OSHA) has set guidelines for Permissible Exposure Limits (PEL). This standard is to be considered the threshold **never to be exceeded** for the health and safety of all workers on this site. Ideally, exposure would never reach these levels. Exposure limits are discussed below.

2.3.3.1 Exposure Limits

OSHA Permissible Exposure Limit (PEL) for General Industry: 29 CFR 1910.1000 Z-2 Table -- Exposures shall not exceed 20 ppm (ceiling) with the following exception: if no other measurable exposure occurs during the 8-hour work shift, exposures may exceed 20 ppm, but not more than 50 ppm (peak), for a single time period up to 10 minutes.

OSHA Permissible Exposure Limit (PEL) for Construction Industry: 29 CFR 1926.55 Appendix A -- 10 ppm, 15 mg/m^3 Total Weighted Average (TWA), accessed via the internet at the following address:

http://www.osha.gov/dts/chemicalsampling/data/CH_246800.html#exposure

The maximum exposure limit for an 8-hour day is less than 10 ppm.

2.4 H_2S EMERGENCY PROCEDURES

2.4.1 INCIDENT

H_2S alarm system activation. Light and siren warnings or personal H_2S monitor activation for any one "worker."

2.4.2 PRIMARY EMERGENCY PROCEDURE

- **i.** All rig crew personnel and all auxiliary personnel must **DON BREATHING APPARATUS IMMEDIATELY!**
- **ii.** Rig crew should mask up with SCBA type work packs preferentially.
- **iii.** All auxiliary crew should move to safety briefing area, uphill and upwind.
- **iv.** All non-essential personal should continue to evacuate site.

2.4.3 SECONDARY EMERGENCY PROCEDURE

I. Supervisory Personnel

- **i.** Company Foreman
  - **a.** Proceed to cascade trailer and check for safe operation of cascade system
  - **b.** Proceed to active safety briefing areas and account for all personnel. If all personnel are not accounted for, then initiate an appropriate search.
  - **c.** Return to drilling floor and supervise operations

RECEIVED: January 07, 2013

- **ii.** Tool Pusher
  - **a.** Proceed to cascade trailer and check if Company Foreman is operating cascade system safely. If NOT, ensure safe operations of the cascade system.
  - **b.** Proceed to drilling floor and supervise operations. Make sure all crew members are accounted for and institute buddy system. If all personnel are not accounted for, initiate appropriate search.

II. Rig Crew

- **i.** Driller
  - **a.** if drilling
    1. after donning breathing apparatus proceed to console and raise Kelly to slip-set position
    2. shut down mud pumps
    3. monitor well flow, remain at console
    4. using hand signals verify all personnel are at stations, verify company man and toolpusher's positions, initiate search if well is not flowing
  - **b.** If tripping
    1. after donning breathing apparatus, put pipe in the slip-set position
    2. stab safety valve, close safety valve
    3. monitor well flow, remain at console
    4. watch derrick man descend from derrick, verify all personnel locations, verify company man and tool pusher's positions, initiate search if well is not flowing
  - **c.** if well is flowing
    1. after donning breathing apparatus, shut well in HARD
    2. verify all personnel locations, verify company man and tool pusher's positions, initiate search if necessary
    3. obtain necessary pressures for well control
    4. Proceed to safety briefing area with crew, plan well control operations with all personnel
- **ii.** Derrick Man
  - **a.** after donning breathing apparatus, go to pit side window on the floor whether drilling or tripping (descend derrick)
  - **b.** maintain visual contact with driller and monitor flow
  - **c.** if mud properties are needed, then proceed to the shaker with "buddy"
  - **d.** monitor other hands on pit side of rig visually
  - **e.** proceed to open manual well-head if necessary (with "buddy")
- **iii.** Motorman
  - **a.** after donning breathing apparatus, go to the cascade system and ensure safe operation
  - **b.** maintain visual contact with chain hand on doghouse side of floor
- **iv.** Chain Hand
  - **a.** after donning breathing apparatus, stab safety valve if tripping
  - **b.** go to doghouse/pipe-rack and maintain visual contact with driller and motorman
- **v.** Floorman
  - **a.** after donning breathing apparatus, stab safety valve if tripping
  - **b.** aid driller while maintaining visual contact with driller, derrickman, and chainhand

III. Auxiliary Personnel

RECEIVED: January 07, 2013

API Well Number: 43037500430000

- **i.** Mud engineer and Company man or geologist are to act as wardens. Wardens must account for all other auxiliary crew.
- **ii.** All auxiliary crew are to remain in safety briefing area unless evacuated by wardens.
- **iii.** Wardens organize search with notification from company. All searches are to be done with "buddy". Geologist warden should remain in safety briefing area.

2.4.4 IGNITING THE WELL

I. Decision

- **i.** The Company Foreman holds the responsibility for the decision to ignite a well. In the case where he is incapacitated or absent, authority passes to the tool pusher and then the contract driller
- **ii.** the decision to ignite the well is only to be made as a last resort safety measure when
  - **a.** there is threat to human life and grave threat to public safety and equipment
  - **b.** there is no alternative way of containing the well given the emergency faced
  - **c.** an attempt was made to contact area office (circumstances permitting)*

when human life is threatened, no delay in decision-making can be afforded

II. Instructions for Igniting the Well

- **i.** Two individuals are required for ignition
- **ii.** Both individuals will wear SCBAs & have 200-foot retrieval ropes tied to their waists
- **iii.** One individual will measure the atmosphere for explosive gases with appropriate meter
- **iv.** The other individual will remain in the safety briefing area
- **v.** Others in the briefing area are to remain aware of both individuals and aid as able. If either tethered individual is overcome by gas, he should be pulled to safety.
- **vi.** The well should be lit with a 25 mm meteor type flare gun when well conditions allow. The safest method of igniting the well should always be used.
- **vii.** Burning H_2S will produce sulfur dioxide which is poisonous. The area therefore is not safe once the well has ignited. Continue to observe all emergency procedures and follow orders from supervisors and the area office. Notice of incident must be reported to all appropriate authorities.

3.0 APPENDICES

3.1 CHECK LIST FOR SAFETY EQUIPMENT (DESIGNED FOR A MAXIMUM OF 11 PEOPLE)

- Safety Trailer housing cascade system at least ten 300 cu. ft. bottles of compressed air
- 7 SCBA type breathing apparatus with 45 cu. ft. bottles
- 5 breathing masks connected to the cascade system with 7 cu. ft. pony bottles
- 2 extra 300 cu. ft. bottles able to refill SCBA bottles to be placed at the safety briefing areas
- 2 Wind socks
- 1 Flare gun and flares
- 1 rescue pack (as described in section 2.3.1)
- Warning signs for access (flags for marking conditions)
- 2 "Safety Briefing Areas", signs, and evacuation route flags
- H_2S monitors (personal and stationary)
- Alarm system (audio and visual—explosion proof)
- Gas monitor (LEL, VOC, etc.)

RECEIVED: January 07, 2013

3.2 EMERGENCY PHONE NUMBERS

Navajo Nation Oil & Gas Company Personnel to be Notified:

Name	Position	Contact Number
Wilson Groen	President	Office: (928) 871-4880 Cell: (505) 879-6483 Direct: (928) 871-8501
Wayne Williams	Exploration Manager	Cell: (720) 334-9920 Office: (303) 534-8300
John Hatch	Manager	Cell: (303) 887-3684 Home: (303) 534-8300
Bill McCabe	Manager	Cell: (303) 257-6303

NNOGC Lead Contractor Personnel to be Notified:

Person	Company	Contact Number
John Thompson	Walsh Engineering & Production Corp.	(505) 327-4892
Paul Thompson	Walsh Engineering & Production Corp.	(505) 327-4892
West Hahn	Walsh Engineering & Production Corp.	(505) 327-4892

Safety Company Personnel:

Name	Position	Contact Number
(Name)	(Position)	(Number work) (Number home)

Local Agencies or Organizations:

Local Agency or Organization	Number
San Juan County Fire Department (Monticello)	911 (435) 587-3225
San Juan County Sheriff (Monticello)	911 (435) 587-2237
San Juan County Emergency Management (Monticello)	(435)-587-3225
Blue Mountain Hospital	(435) 678-3993 802 South, 200 West Blanding, UT
San Juan Hospital	(435) 587-2116 364 West, 100 North Monticello, UT
Navajo Nation Police (Montezuma Creek) (Monument Valley)	(505) 368-1350 (505) 325-0022

RECEIVED: January 07, 2013

Other Government Agencies or Organizations:

Other Government Agency or Organization	Number
National Response Center	800-424-8802
BLM - Monticello Field Office - Jeff Brown - Mobile - Field Manager	(435) 587-1500 (435) 587-1525 (435) 459-4886 (435) 587-1505
BLM - Farmington Field Office - Jim Lovato	(505) 564-7600 (505) 249-2004
BIA - Gallup, Bertha Spencer	(505) 863-8336
Utah Division of Oil, Gas and Mining (SLC) During Office Hours After Hours	(801) 538-5340 (801) 243-9466
Utah State Emergency Response Commission	(801) 536-4123
Utah Highway Patrol (Monticello)	(435) 587-2000
Mexican Water Chapter House	(928) 674-3641
Red Mea Chapter House	(928) 656-3655
Utah Health Department (Price)	(435) 637-3671
US EPA Region 8 (Denver)	(800) 227-8917
Navajo Nation Minerals Dept. (Window Rock, AZ)	(928) 871-6587
Veterinarian, Watkins, Clyde H. DVM	(435) 678-2414
Helicopter - New Air Helicopters (Durango) - Heli NM (Albuquerque)	(970) 259-6247 (866) 995 1058
Blanding Air Ambulance	(800) 742-8787
Classic Aviation	(800)-444-9220 Ext. 5

RECEIVED: January 07, 2013

Residents within 2 miles of proposed NNOGC wells in the Tohonadla Field:

There are 22 homes and 1 NN Headstart within 2 miles of the Tohonadla Field (Leases 14-20-603-229 and 14-20-603-270). There are two separate houses (Rita & Benny Stash and Ken Black) closest to NNOGC's proposed wells in the Tohonadla Field, each being ≈680 feet west of two different wells, the 2 Bravo and 2G respectively (See Figure 3 and large format H_2S Contingency Plan Map attached). The table below provides a list of all residents and the NN Headstart, their addresses, phone numbers, and known locations in latitude and longitude (NAD 83).

Name	Address	Number	Lattitude	Longitude
Samuel Buck	PO Box 494 Bluff, UT 84512	(435) 444-9281	N 37°11.073	W 109°35.239
Eugene Begay	PO Box 393 Bluff, UT 84512	--	N 37°11.110	W 109°35.159
John Yellowman	PO Box 553 Bluff, UT 84512	(505) 701-4422 (505) 701-4437	N 37°11.072	W 109°35.178
Benny & Rita Stash	PO Box 257 Bluff, UT 84513	--	N 37°10.425	W 109°34.681
Betty Stash	PO Box 213 Bluff, UT 84514	(435) 419-0863	N 37°10.372	W 109°34.789
Ken Black	PO Box 289 Bluff, UT 84515	(916) 995-6977	N 37°10.187	W 109°34.622
Jerome Benally	PO Box 75 Bluff, UT 84516	(435) 201-1208	N 37°09.673	W 109°34.244
NN Headstart	--	--	N 37°09.425	W 109°34.123
Tammy & Mark Black	PO Box 390 Bluff, UT 84518	(435) 459-1139	N 37°09.670	W 109°33.907
Valerie & Efren Lee	PO Box 366 Bluff, UT 84519	(435) 669-3592	--	--
Leo Blackhorse	PO Box 409 Bluff, UT 84520	(435) 444-0160	N 37°09.359	W 109°34.010
Ophelia Blackhorse	PO Box 586 Bluff, UT 84521	(435) 444-0640	N 37°09.350	W 109°33.992
Tom Tsosie Boy	PO Box 154 Bluff, UT 84522	--	N 37°09.286	W 109°34.385
Leroy Boy	--	--	N 37°09.266	W 109°34.379
Blue House	--	--	N 37°08.652	W 109°34.531
Susan Blackhorse	PO Box 207 Bluff, UT 84525	--	N 37°08.578	W 109°34.545
Pauline Black	--	--	N 37°08.550	W 109°34.561
Tyra Benally	PO Box 447 Bluff, UT 84525	(970) 570-5154	N 37°08.590	W 109°34.496
Mary Benally	PO Box 306 Bluff, UT 84525	(801) 403-6125	N 37°08.565	W 109°34.483
Paul Atcitty	PO Box 348 Bluff, UT 84525	(435) 444-0432	N 37°12.811	W 109°36.886
Charley Bitsoi	PO Box 217 Bluff, UT 84525	(435) 220-9122	N 37°10.259	W 109°30.926
Emary Maryboy	PO Box 356 Bluff, UT 84525	(435) 444-9647	N 37°10.218	W 109°30.811
Ruth Bitsoi	PO Box 267 Bluff, UT 84525	(435) 444-9087	N 37°10.114	W 109°30.746

RECEIVED: January 07, 2013

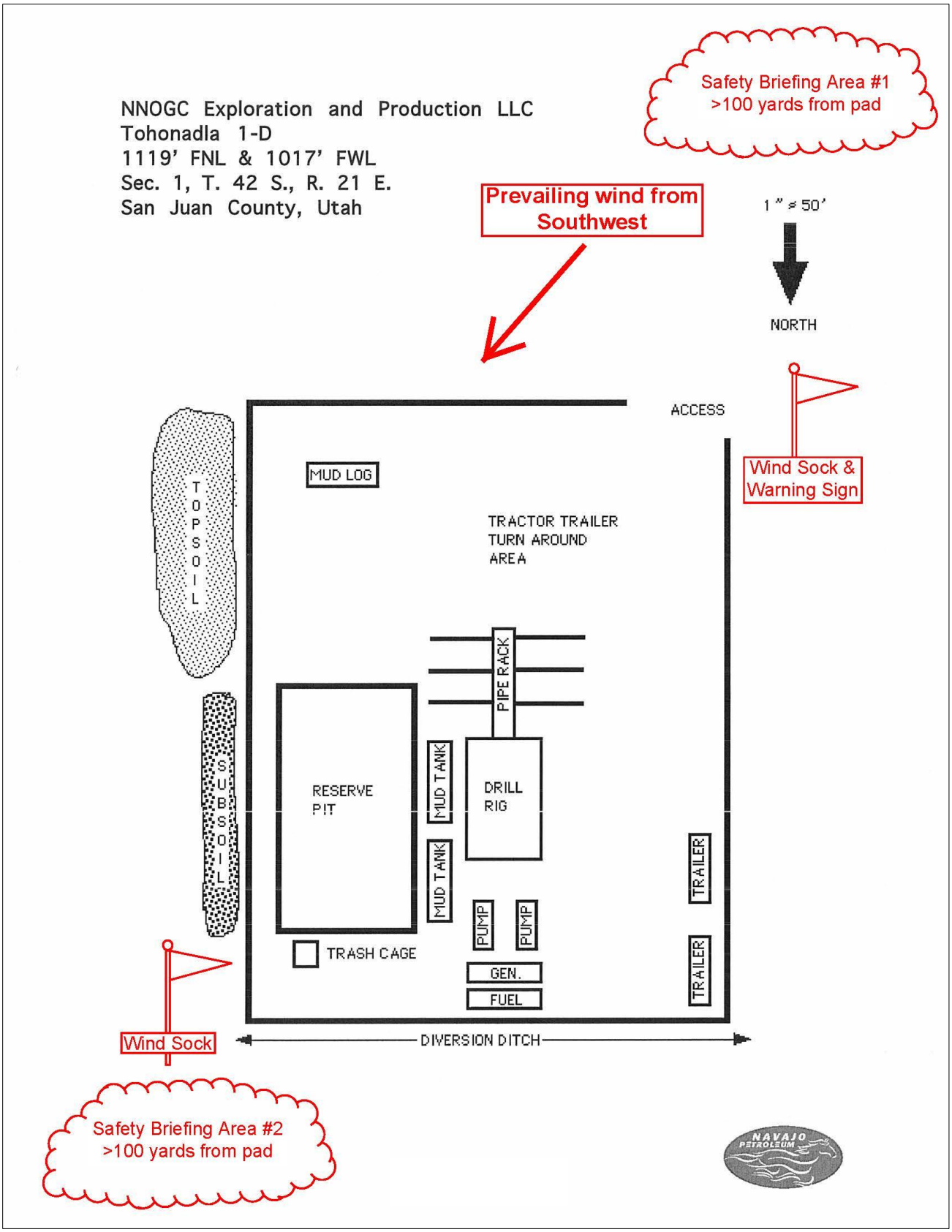

Figure 1. Example well pad diagram from Toho 1D APD with wind socks and Safety Briefing Areas.

RECEIVED: January 07, 2013

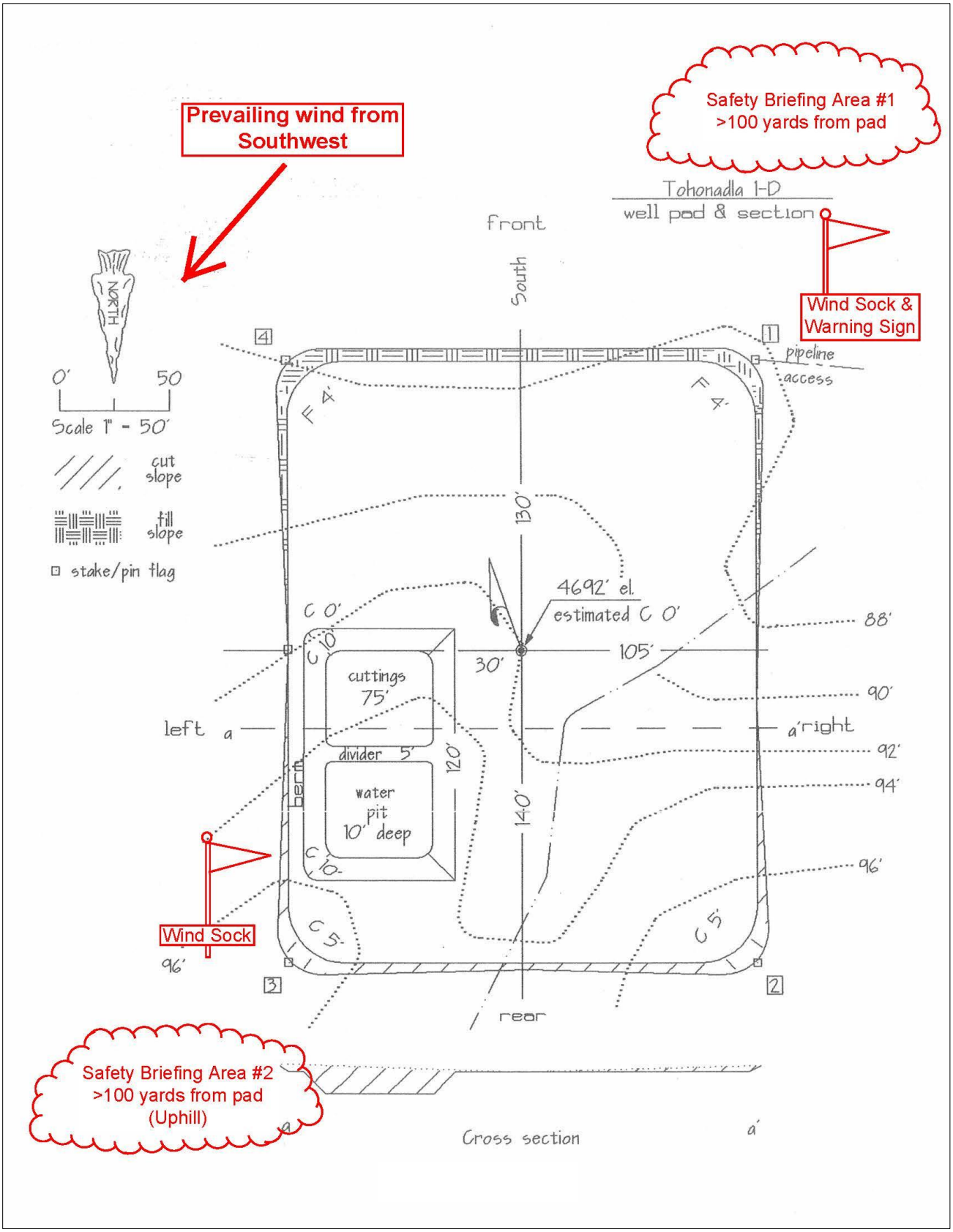

Figure 2. Example well diagram with original topography, wind socks, and Safety Briefing Areas.

RECEIVED: January 07, 2013

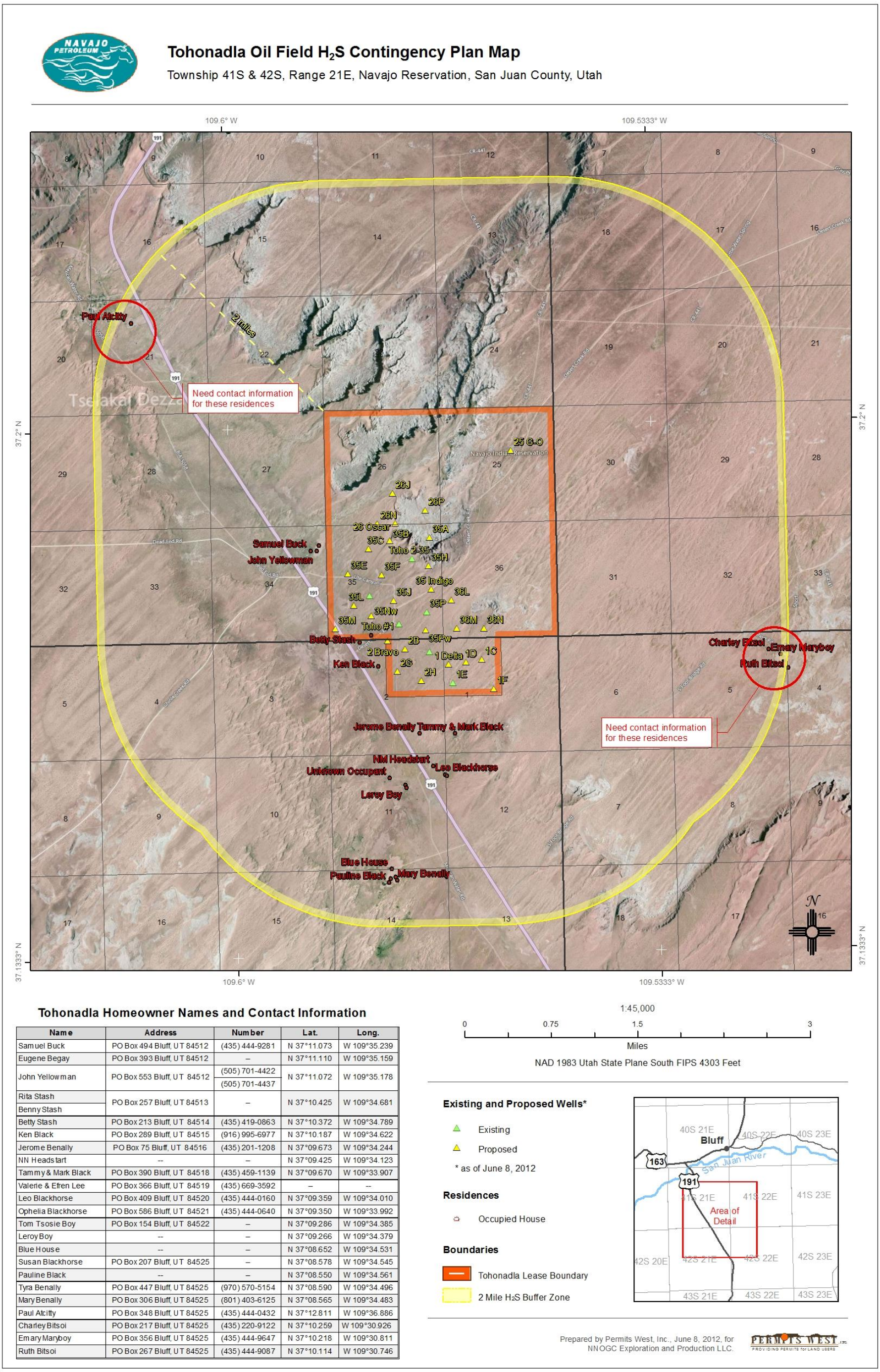

Tohonadla Homeowner Names and Contact Information

Name	Address	Number	Lat.	Long.
Samuel Buck	PO Box 494 Bluff, UT 84512	(435) 444-9281	N 37°11.073	W 109°35.239
Eugene Begay	PO Box 393 Bluff, UT 84512	–	N 37°11.110	W 109°35.159
John Yellowman	PO Box 553 Bluff, UT 84512	(505) 701-4422 (505) 701-4437	N 37°11.072	W 109°35.178
Rita Stash	PO Box 257 Bluff, UT 84513	–	N 37°10.425	W 109°34.681
Benny Stash				
Betty Stash	PO Box 213 Bluff, UT 84514	(435) 419-0863	N 37°10.372	W 109°34.789
Ken Black	PO Box 289 Bluff, UT 84515	(916) 995-6977	N 37°10.187	W 109°34.622
Jerome Benally	PO Box 75 Bluff, UT 84516	(435) 201-1208	N 37°09.673	W 109°34.244
NN Headstart	--	–	N 37°09.425	W 109°34.123
Tammy & Mark Black	PO Box 390 Bluff, UT 84518	(435) 459-1139	N 37°09.670	W 109°33.907
Valerie & Efren Lee	PO Box 366 Bluff, UT 84519	(435) 669-3592	–	--
Leo Blackhorse	PO Box 409 Bluff, UT 84520	(435) 444-0160	N 37°09.359	W 109°34.010
Ophelia Blackhorse	PO Box 586 Bluff, UT 84521	(435) 444-0640	N 37°09.350	W 109°33.992
Tom Tsosie Boy	PO Box 154 Bluff, UT 84522	–	N 37°09.286	W 109°34.385
Leroy Boy	--	–	N 37°09.266	W 109°34.379
Blue House	--	–	N 37°08.652	W 109°34.531
Susan Blackhorse	PO Box 207 Bluff, UT 84525	–	N 37°08.578	W 109°34.545
Pauline Black	--	–	N 37°08.550	W 109°34.561
Tyra Benally	PO Box 447 Bluff, UT 84525	(970) 570-5154	N 37°08.590	W 109°34.496
Mary Benally	PO Box 306 Bluff, UT 84525	(801) 403-6125	N 37°08.565	W 109°34.483
Paul Atcitty	PO Box 348 Bluff, UT 84525	(435) 444-0432	N 37°12.811	W 109°36.886
Charley Bitsoi	PO Box 217 Bluff, UT 84525	(435) 220-9122	N 37°10.259	W 109°30.926
Emary Maryboy	PO Box 356 Bluff, UT 84525	(435) 444-9647	N 37°10.218	W 109°30.811
Ruth Bitsoi	PO Box 267 Bluff, UT 84525	(435) 444-9087	N 37°10.114	W 109°30.746

Figure 3. H_2S Contingency Plan Map: Tohonadla Field-Wide with 2-mile buffer, contact names, and phone numbers.

RECEIVED: January 07, 2013

API Well Number: 43037500430000

NAVAJO NATION OIL & GAS COMPANY

EXPLORATION & PRODUCTION, LLC

1625 Broadway, Suite 1000 • Denver, Colorado • 80202

Telephone (303) 534-8300 • FAX (303) 534-1405

January 7, 2013

Utah Department of Natural Resources: Division of Oil, Gas, and Mining
Diana Mason
P.O. Box 145801
Salt Lake City, Utah 84114-5801

Dear Diana:

RE: EXCEPTION TO LOCATION
Well Name: Tohonadla 35-c
APD Number: 7455
Lease No.: 14-20-603-229
Operator: NNOGC Exploration and Production, LLC

Pursuant to R649-3-2, I would like to request an exception for the location of the above referenced well.

The location of the proposed well is not in the center of the quarter-quarter in Section 35: Township 41 South, Range 21 East SLPM, San Juan County, Utah. The site of this proposed well is on Navajo Tribal land and the Navajo Nation is the only owner within 460 feet of the proposed well.

NNOGC has received approval from the BIA, BLM, the Navajo Nation and NEPA for this proposed well and pipeline on Navajo Tribal Trust land. The reason for this particular well location is for production in the Desert Creek and Ismay formations. Also, this location is near existing access to eliminate additional surface disturbance. Under the terms of the Navajo Nation Tribal Lease, NNOGC has the obligation to develop these mineral resources.

The need for this project is established under the Federal Onshore Oil & Gas Leasing Reform Act of 1987 to extract mineral resources from Indian Tribal lease land for oil and gas development.

Attached to the Application for Permit to Drill is a well location plat map showing the siting of the proposed well.

Should you require any additional information to approve this exception, please contact me at (303) 534-8300.

Sincerely,

Katie Hynes

Katie Hynes
Associate Landman

API Well Number: 43037500430000

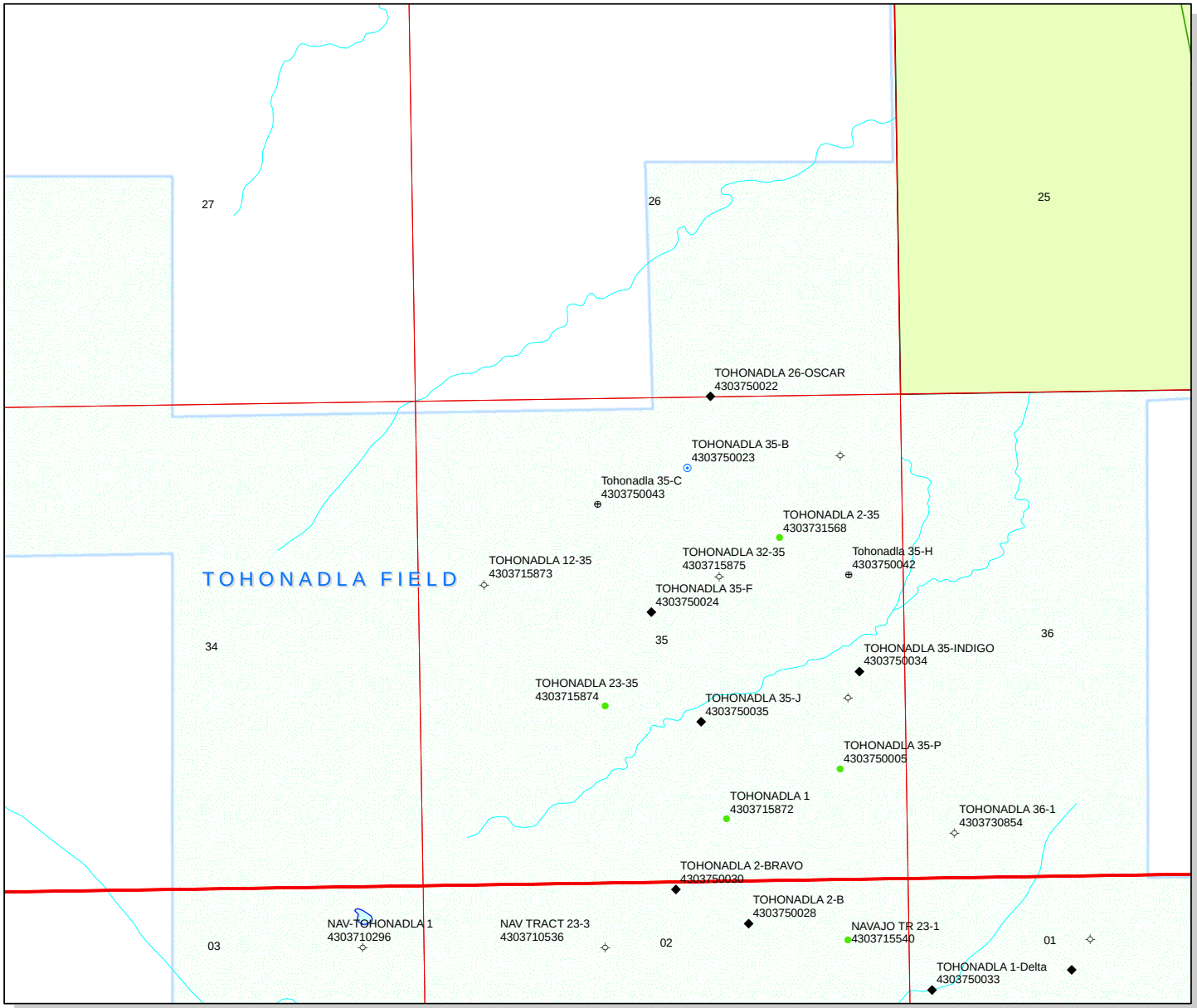

API Number: 4303750043

Well Name: Tohonadla 35-C

Township T41.0S Range R21.0E Section 35

Meridian: SLBM

Operator: NNOGC EXPLORATION & PRODUCTION, LLC

Map Prepared:
Map Produced by Diana Mason

Units
STATUS
- ACTIVE
- EXPLORATORY
- GAS STORAGE
- NF PP OIL
- NF SECONDARY
- PI OIL
- PP GAS
- PP GEOTHERML
- PP OIL
- SECONDARY
- TERMINATED

Fields
STATUS
- Unknown
- ABANDONED
- ACTIVE
- COMBINED
- INACTIVE
- STORAGE
- TERMINATED

Wells Query
Status
- APD - Aproved Permit
- DRL - Spuded (Drilling Commenced)
- GIW - Gas Injection
- GS - Gas Storage
- LOC - New Location
- OPS - Operation Suspended
- PA - Plugged Abandoned
- PGW - Producing Gas Well
- POW - Producing Oil Well
- SGW - Shut-in Gas Well
- SOW - Shut-in Oil Well
- TA - Temp. Abandoned
- TW - Test Well
- WDW - Water Disposal
- WIW - Water Injection Well
- WSW - Water Supply Well
- Bottom Hole Location - OilGasDb

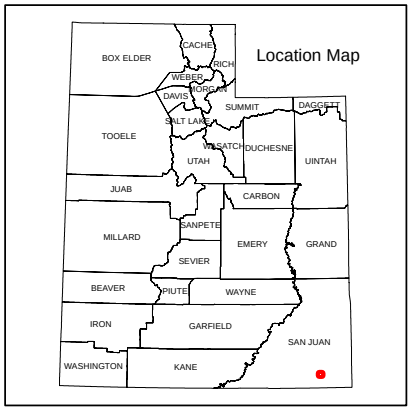

1,400 700 0 1,400 Feet

1:13,484

RECEIVED: January 08, 2013

API Well Number: 43037500430000

WORKSHEET
APPLICATION FOR PERMIT TO DRILL

APD RECEIVED: 1/7/2013 **API NO. ASSIGNED:** 43037500430000
WELL NAME: Tohonadla 35-C
OPERATOR: NNOGC EXPLORATION & PRODUCTION, LLC (N3930) **PHONE NUMBER:** 303 538-8300
CONTACT: Lauren Germinario

PROPOSED LOCATION: NENW 35 410S 210E **Permit Tech Review:** ✔

SURFACE: 1130 FNL 1961 FWL **Engineering Review:** ☐

BOTTOM: 1130 FNL 1961 FWL **Geology Review:** ✔

COUNTY: SAN JUAN
LATITUDE: 37.18455 **LONGITUDE:** -109.57880
UTM SURF EASTINGS: 626150.00 **NORTHINGS:** 4116291.00
FIELD NAME: TOHONADLA
LEASE TYPE: 2 - Indian
LEASE NUMBER: 14-20-603-229 **PROPOSED PRODUCING FORMATION(S):** DESERT CREEK
SURFACE OWNER: 2 - Indian **COALBED METHANE:** NO

RECEIVED AND/OR REVIEWED:

- ✔ **PLAT**
- ✔ **Bond:** INDIAN - RLB0006712
- ☐ **Potash**
- ☐ **Oil Shale 190-5**
- ☐ **Oil Shale 190-3**
- ☐ **Oil Shale 190-13**
- ✔ **Water Permit:** 09-135
- ☐ **RDCC Review:**
- ☐ **Fee Surface Agreement**
- ☐ **Intent to Commingle**

Commingling Approved

LOCATION AND SITING:

- ☐ **R649-2-3.**

Unit:

- ☐ **R649-3-2. General**
- ✔ **R649-3-3. Exception**
- ✔ **Drilling Unit**

Board Cause No: R649-3-3
Effective Date:
Siting:

- ☐ **R649-3-11. Directional Drill**

Comments: Presite Completed

Stipulations:
1 - Exception Location - dmason
4 - Federal Approval - dmason
23 - Spacing - dmason

RECEIVED: January 16, 2013

GARY R. HERBERT
Governor

GREGORY S. BELL
Lieutenant Governor

State of Utah

DEPARTMENT OF NATURAL RESOURCES

MICHAEL R. STYLER
Executive Director

Division of Oil, Gas and Mining

JOHN R. BAZA
Division Director

Permit To Drill

****

Well Name: Tohonadla 35-C
API Well Number: 43037500430000
Lease Number: 14-20-603-229
Surface Owner: INDIAN
Approval Date: 1/16/2013

Issued to:
NNOGC EXPLORATION & PRODUCTION, LLC, 1625 Broadway, Suite 1000, Denver , CO 80202

Authority:
Pursuant to Utah Code Ann. 40-6-1 et seq., and Utah Administrative Code R649-3-1 et seq., the Utah Division of Oil, Gas and Mining issues conditions of approval, and permit to drill the listed well. This permit is issued in accordance with the requirements of R649-3-3. The expected producing formation or pool is the DESERT CREEK Formation(s), completion into any other zones will require filing a Sundry Notice (Form 9). Completion and commingling of more than one pool will require approval in accordance with R649-3-22.

Duration:
This approval shall expire one year from the above date unless substantial and continuous operation is underway, or a request for extension is made prior to the expiration date

Exception Location:
Appropriate information has been submitted to DOGM and administrative approval of the requested exception location is hereby granted.

General:
Compliance with the requirements of Utah Admin. R. 649-1 et seq., the Oil and Gas Conservation General Rules, and the applicable terms and provisions of the approved Application for permit to drill.

Conditions of Approval:
State approval of this well does not supercede the required federal approval, which must be obtained prior to drilling.

This proposed well is located in an area for which drilling units (well spacing patterns) have not been established through an order of the Board of Oil, Gas and Mining (the “Board”). In order to avoid the possibility of waste or injury to correlative rights, the operator is requested, once the well has been drilled, completed, and has produced, to analyze geological and engineering data generated therefrom, as well as any similar data from surrounding areas if available. As soon as is practicable after completion of its analysis, and if the analysis suggests an

area larger than the quarter-quarter section upon which the well is located is being drained, the operator is requested to seek an appropriate order from the Board establishing drilling and spacing units in conformance with such analysis by filing a Request for Agency Action with the Board.

Notification Requirements:
The operator is required to notify the Division of Oil, Gas and Mining of the following actions during drilling of this well:

- Within 24 hours following the spudding of the well - contact Carol Daniels at 801-538-5284
  (please leave a voicemail message if not available)
  OR
  submit an electronic sundry notice (pre-registration required) via the Utah Oil & Gas website
  at http://oilgas.ogm.utah.gov

Reporting Requirements:
All reports, forms and submittals as required by the Utah Oil and Gas Conservation General Rules will be promptly filed with the Division of Oil, Gas and Mining, including but not limited to:

- Entity Action Form (Form 6) - due within 5 days of spudding the well
- Monthly Status Report (Form 9) - due by 5th day of the following calendar month
- Requests to Change Plans (Form 9) - due prior to implementation
- Written Notice of Emergency Changes (Form 9) - due within 5 days
- Notice of Operations Suspension or Resumption (Form 9) - due prior to implementation
- Report of Water Encountered (Form 7) - due within 30 days after completion
- Well Completion Report (Form 8) - due within 30 days after completion or plugging

Approved By:

For John Rogers
Associate Director, Oil & Gas

FORM 9

STATE OF UTAH
DEPARTMENT OF NATURAL RESOURCES
DIVISION OF OIL, GAS, AND MINING

5.LEASE DESIGNATION AND SERIAL NUMBER: 14-20-603-229

SUNDRY NOTICES AND REPORTS ON WELLS

Do not use this form for proposals to drill new wells, significantly deepen existing wells below current bottom-hole depth, reenter plugged wells, or to drill horizontal laterals. Use APPLICATION FOR PERMIT TO DRILL form for such proposals.

6. IF INDIAN, ALLOTTEE OR TRIBE NAME: Navajo

7.UNIT or CA AGREEMENT NAME:

1. TYPE OF WELL Oil Well

8. WELL NAME and NUMBER: Tohonadla 35-C

2. NAME OF OPERATOR: NNOGC EXPLORATION & PRODUCTION, LLC

9. API NUMBER: 43037500430000

3. ADDRESS OF OPERATOR: 1625 Broadway, Suite 1000 , Denver , CO, 80202

PHONE NUMBER: 303 910-9525 Ext

9. FIELD and POOL or WILDCAT: TOHONADLA

4. LOCATION OF WELL
FOOTAGES AT SURFACE: 1130 FNL 1961 FWL
QTR/QTR, SECTION, TOWNSHIP, RANGE, MERIDIAN: Qtr/Qtr: NENW Section: 35 Township: 41.0S Range: 21.0E Meridian: S

COUNTY: SAN JUAN

STATE: UTAH

11. CHECK APPROPRIATE BOXES TO INDICATE NATURE OF NOTICE, REPORT, OR OTHER DATA

TYPE OF SUBMISSION	TYPE OF ACTION		
✓ NOTICE OF INTENT Approximate date work will start: 1/16/2014	☐ ACIDIZE	☐ ALTER CASING	☐ CASING REPAIR
	☐ CHANGE TO PREVIOUS PLANS	☐ CHANGE TUBING	☐ CHANGE WELL NAME
	☐ CHANGE WELL STATUS	☐ COMMINGLE PRODUCING FORMATIONS	☐ CONVERT WELL TYPE
☐ SUBSEQUENT REPORT Date of Work Completion:	☐ DEEPEN	☐ FRACTURE TREAT	☐ NEW CONSTRUCTION
	☐ OPERATOR CHANGE	☐ PLUG AND ABANDON	☐ PLUG BACK
	☐ PRODUCTION START OR RESUME	☐ RECLAMATION OF WELL SITE	☐ RECOMPLETE DIFFERENT FORMATION
☐ SPUD REPORT Date of Spud:	☐ REPERFORATE CURRENT FORMATION	☐ SIDETRACK TO REPAIR WELL	☐ TEMPORARY ABANDON
	☐ TUBING REPAIR	☐ VENT OR FLARE	☐ WATER DISPOSAL
☐ DRILLING REPORT Report Date:	☐ WATER SHUTOFF	☐ SI TA STATUS EXTENSION	✓ APD EXTENSION
	☐ WILDCAT WELL DETERMINATION	☐ OTHER	OTHER:

12. DESCRIBE PROPOSED OR COMPLETED OPERATIONS. Clearly show all pertinent details including dates, depths, volumes, etc.

Approved by the
Utah Division of
Oil, Gas and Mining

Date: November 05, 2013

By: [signature]

NAME (PLEASE PRINT)	PHONE NUMBER	TITLE
Racheal Dahozy	928-871-4880	Regulatory Analyst

SIGNATURE	DATE
N/A	10/29/2013

RECEIVED: Oct. 29, 2013

The Utah Division of Oil, Gas, and Mining

- State of Utah
- Department of Natural Resources

Electronic Permitting System - Sundry Notices

Request for Permit Extension Validation Well Number 43037500430000

API: 43037500430000
Well Name: Tohonadla 35-C
Location: 1130 FNL 1961 FWL QTR NENW SEC 35 TWNP 410S RNG 210E MER S
Company Permit Issued to: NNOGC EXPLORATION & PRODUCTION, LLC
Date Original Permit Issued: 1/16/2013

The undersigned as owner with legal rights to drill on the property as permitted above, hereby verifies that the information as submitted in the previously approved application to drill, remains valid and does not require revision. Following is a checklist of some items related to the application, which should be verified.

- **If located on private land, has the ownership changed, if so, has the surface agreement been updated?** ○ **Yes** ◉ **No**
- **Have any wells been drilled in the vicinity of the proposed well which would affect the spacing or siting requirements for this location?** ○ **Yes** ◉ **No**
- **Has there been any unit or other agreements put in place that could affect the permitting or operation of this proposed well?** ○ **Yes** ◉ **No**
- **Have there been any changes to the access route including ownership, or rightof- way, which could affect the proposed location?** ○ **Yes** ◉ **No**
- **Has the approved source of water for drilling changed?** ○ **Yes** ◉ **No**
- **Have there been any physical changes to the surface location or access route which will require a change in plans from what was discussed at the onsite evaluation?** ○ **Yes** ◉ **No**
- **Is bonding still in place, which covers this proposed well?** ◉ **Yes** ○ **No**

Signature: Racheal Dahozy **Date:** 10/29/2013
Title: Regulatory Analyst **Representing:** NNOGC EXPLORATION & PRODUCTION, LLC

RECEIVED: Oct. 29, 2013

FORM 9

STATE OF UTAH
DEPARTMENT OF NATURAL RESOURCES
DIVISION OF OIL, GAS, AND MINING

5.LEASE DESIGNATION AND SERIAL NUMBER: 14-20-603-229

SUNDRY NOTICES AND REPORTS ON WELLS

Do not use this form for proposals to drill new wells, significantly deepen existing wells below current bottom-hole depth, reenter plugged wells, or to drill horizontal laterals. Use APPLICATION FOR PERMIT TO DRILL form for such proposals.

6. IF INDIAN, ALLOTTEE OR TRIBE NAME: NAVAJO

7.UNIT or CA AGREEMENT NAME:

1. TYPE OF WELL Oil Well

8. WELL NAME and NUMBER: Tohonadla 35-C

2. NAME OF OPERATOR: NNOGC EXPLORATION & PRODUCTION, LLC

9. API NUMBER: 43037500430000

3. ADDRESS OF OPERATOR: 1625 Broadway, Suite 1000 , Denver , CO, 80202

PHONE NUMBER: 303 910-9525 Ext

9. FIELD and POOL or WILDCAT: TOHONADLA

4. LOCATION OF WELL
FOOTAGES AT SURFACE: 1130 FNL 1961 FWL
QTR/QTR, SECTION, TOWNSHIP, RANGE, MERIDIAN: Qtr/Qtr: NENW Section: 35 Township: 41.0S Range: 21.0E Meridian: S

COUNTY: SAN JUAN

STATE: UTAH

11. CHECK APPROPRIATE BOXES TO INDICATE NATURE OF NOTICE, REPORT, OR OTHER DATA

TYPE OF SUBMISSION	TYPE OF ACTION		
✓ NOTICE OF INTENT Approximate date work will start: 1/16/2015	☐ ACIDIZE	☐ ALTER CASING	☐ CASING REPAIR
	☐ CHANGE TO PREVIOUS PLANS	☐ CHANGE TUBING	☐ CHANGE WELL NAME
	☐ CHANGE WELL STATUS	☐ COMMINGLE PRODUCING FORMATIONS	☐ CONVERT WELL TYPE
☐ SUBSEQUENT REPORT Date of Work Completion:	☐ DEEPEN	☐ FRACTURE TREAT	☐ NEW CONSTRUCTION
	☐ OPERATOR CHANGE	☐ PLUG AND ABANDON	☐ PLUG BACK
	☐ PRODUCTION START OR RESUME	☐ RECLAMATION OF WELL SITE	☐ RECOMPLETE DIFFERENT FORMATION
☐ SPUD REPORT Date of Spud:	☐ REPERFORATE CURRENT FORMATION	☐ SIDETRACK TO REPAIR WELL	☐ TEMPORARY ABANDON
	☐ TUBING REPAIR	☐ VENT OR FLARE	☐ WATER DISPOSAL
☐ DRILLING REPORT Report Date:	☐ WATER SHUTOFF	☐ SI TA STATUS EXTENSION	✓ APD EXTENSION
	☐ WILDCAT WELL DETERMINATION	☐ OTHER	OTHER:

12. DESCRIBE PROPOSED OR COMPLETED OPERATIONS. Clearly show all pertinent details including dates, depths, volumes, etc.

Approved by the
Utah Division of
Oil, Gas and Mining

Date: December 04, 2014

By:

NAME (PLEASE PRINT)	PHONE NUMBER	TITLE
Racheal Dahozy	928-871-4880	Regulatory Analyst
SIGNATURE N/A		**DATE** 12/2/2014

RECEIVED: Dec. 02, 2014

The Utah Division of Oil, Gas, and Mining

- State of Utah
- Department of Natural Resources

Electronic Permitting System - Sundry Notices

Request for Permit Extension Validation Well Number 43037500430000

API: 43037500430000
Well Name: Tohonadla 35-C
Location: 1130 FNL 1961 FWL QTR NENW SEC 35 TWNP 410S RNG 210E MER S
Company Permit Issued to: NNOGC EXPLORATION & PRODUCTION, LLC
Date Original Permit Issued: 1/16/2013

The undersigned as owner with legal rights to drill on the property as permitted above, hereby verifies that the information as submitted in the previously approved application to drill, remains valid and does not require revision. Following is a checklist of some items related to the application, which should be verified.

- **If located on private land, has the ownership changed, if so, has the surface agreement been updated?** ○ **Yes** ◉ **No**
- **Have any wells been drilled in the vicinity of the proposed well which would affect the spacing or siting requirements for this location?** ○ **Yes** ◉ **No**
- **Has there been any unit or other agreements put in place that could affect the permitting or operation of this proposed well?** ○ **Yes** ◉ **No**
- **Have there been any changes to the access route including ownership, or rightof- way, which could affect the proposed location?** ○ **Yes** ◉ **No**
- **Has the approved source of water for drilling changed?** ○ **Yes** ◉ **No**
- **Have there been any physical changes to the surface location or access route which will require a change in plans from what was discussed at the onsite evaluation?** ○ **Yes** ◉ **No**
- **Is bonding still in place, which covers this proposed well?** ◉ **Yes** ○ **No**

Signature: Racheal Dahozy **Date:** 12/2/2014
Title: Regulatory Analyst **Representing:** NNOGC EXPLORATION & PRODUCTION, LLC

RECEIVED: Dec. 02, 2014

GARY R. HERBERT
Governor

SPENCER J. COX
Lieutenant Governor

State of Utah

DEPARTMENT OF NATURAL RESOURCES

MICHAEL R. STYLER
Executive Director

Division of Oil, Gas and Mining
JOHN R. BAZA
Division Director

March 17, 2016

NNOGC Exploation & Prod., LLC.
1625 Broadway, Ste. 1000
Denver, CO 80202

Re: APDs Rescinded for NNOGC Exploation & Prod., , San Juan County

Ladies and Gentlemen:

Enclosed find the list of APDs that is being rescinded. No drilling activity at these locations has been reported to the division. Therefore, approval to drill these wells is hereby rescinded as of March 17, 2016.

A new APD must be filed with this office for approval prior to the commencement of any future work on the subject location.

If any previously unreported operations have been performed on this well location, it is imperative that you notify the Division immediately.

Sincerely,

Diana Mason
Environmental Scientist

cc: Well File
Bureau of Land Management, Monticello

1594 West North Temple, Suite 1210, Salt Lake City, UT 84116
PO Box 145801, Salt Lake City, UT 84114-5801
telephone (801) 538-5340 • facsimile (801) 359-3940 • TTY (801) 538-7458 • *www.ogm.utah.gov*

UTAH DNR
OIL, GAS & MINING

43-037-50042	TOHONADLA 35-H
43-037-50043	TOHONADLA 35-C
43-037-50044	TOHONADLA 35-E
43-037-50046	TOHONADLA 35-NW
43-037-50047	TOHONADLA 36-L
43-037-50048	TOHONADLA 26-J
43-037-50049	TOHONADLA 36-N
43-037-50050	TOHONADLA 35-M
43-037-50051	TOHONADLA 26-N
43-037-50045	TOHONADLA 35-L