FILE NOTATIONS

Entered in NID File ..✓.....
Location Map Pinned .....
Card Indexed .....

Checked by Chief .....
Approval Letter .....
Disapproval Letter .....

COMPLETION DATA:

Date Well Completed 12-4-78

Location Inspected .....

OW..... WW..... TA.....
GW..... OS..... PA.....

Bond released
State or Fee Land .....

LOGS FILED

Driller's Log.....✓

Electric Logs (No.) .....

E..... I..... Dual I Lat..... GR-N..... Micro.....

BHC Sonic GR..... Lat..... ML-L..... Sonic.....

CBLog..... CCLog..... Others.....

Form 9-331 C
(May 1963)

SUBMIT IN TRIPLICATE*
(Other instructions on reverse side)

Form approved.
Budget Bureau No. 42-R1425.

UNITED STATES
DEPARTMENT OF THE INTERIOR
GEOLOGICAL SURVEY

APPLICATION FOR PERMIT TO DRILL, DEEPEN, OR PLUG BACK

5. LEASE DESIGNATION AND SERIAL NO.: U-094674

6. IF INDIAN, ALLOTTEE OR TRIBE NAME:

7. UNIT AGREEMENT NAME:

8. FARM OR LEASE NAME: Lisbon-Federal 21

9. WELL NO.: 3

10. FIELD AND POOL, OR WILDCAT: McCracken S.S. Little Valley Leadville

11. SEC., T., R., M., OR BLK. AND SURVEY OR AREA: Sec.21,T30S,R25E

12. COUNTY OR PARISH: San Juan

13. STATE: Utah

1a. TYPE OF WORK: DRILL [X] DEEPEN [ ] PLUG BACK [ ]

b. TYPE OF WELL: OIL WELL [X] GAS WELL [ ] OTHER SINGLE ZONE [ ] MULTIPLE ZONE [X]

2. NAME OF OPERATOR: Mesa Petroleum Company

3. ADDRESS OF OPERATOR: Box 2009; Amarillo, Texas 79105

4. LOCATION OF WELL (Report location clearly and in accordance with any State requirements.*)
At surface: 1100' FNL & 1400' FEL
At proposed prod. zone: SAME

14. DISTANCE IN MILES AND DIRECTION FROM NEAREST TOWN OR POST OFFICE*: None

15. DISTANCE FROM PROPOSED* LOCATION TO NEAREST PROPERTY OR LEASE LINE, FT. (Also to nearest drlg. unit line, if any): 1440

16. NO. OF ACRES IN LEASE: 1440

17. NO. OF ACRES ASSIGNED TO THIS WELL: 160

18. DISTANCE FROM PROPOSED LOCATION* TO NEAREST WELL, DRILLING, COMPLETED, OR APPLIED FOR, ON THIS LEASE, FT.:

19. PROPOSED DEPTH: 10,000

20. ROTARY OR CABLE TOOLS: Rotary

21. ELEVATIONS (Show whether DF, RT, GR, etc.): 6710 G.L.

22. APPROX. DATE WORK WILL START*: April 28, 1978

23. PROPOSED CASING AND CEMENTING PROGRAM

SIZE OF HOLE	SIZE OF CASING	WEIGHT PER FOOT	SETTING DEPTH	QUANTITY OF CEMENT
17 ½	13 3/8new	54.5	300'	350 sk.
12 ¼	8 5/8new	24	2200'	750 sk.
7 7/8	5 ½new	15.5	10,000	1400 sk.

(See attachments)

RECEIVED MAY 12 1978 DIVISION OF GAS, & MINING

IN ABOVE SPACE DESCRIBE PROPOSED PROGRAM: If proposal is to deepen or plug back, give data on present productive zone and proposed new productive zone. If proposal is to drill or deepen directionally, give pertinent data on subsurface locations and measured and true vertical depths. Give blowout preventer program, if any.

24. SIGNED John Alexander TITLE AGENT DATE 4-19-78

(This space for Federal or State office use)

PERMIT NO. 43-037-30436 APPROVAL DATE

APPROVED BY TITLE DATE

CONDITIONS OF APPROVAL, IF ANY:

*See Instructions On Reverse Side

COMPANY MESA PETROLEUM COMPANY

LEASE Lisbon-Federal 21 WELL NO. 3

SEC. 21, T. 30S, R. 25E
San Juan County, Utah

LOCATION 1100'FNL 1400'FEL

ELEVATION 6710 ungraded ground

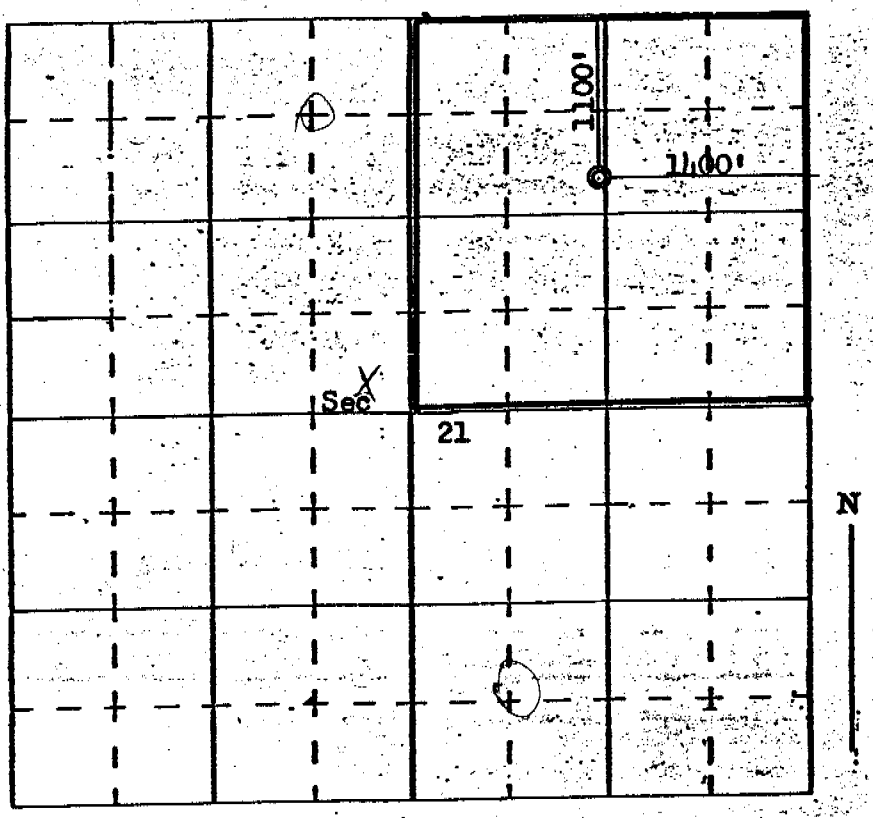

SCALE—4 INCHES EQUALS 1 MILE

THIS IS TO CERTIFY THAT THE ABOVE PLAT WAS PREPARED FROM FIELD NOTE OF ACTUAL SURVEYS MADE BY ME UNDER MY SUPERVISION AND THAT THE SAME ARE TRUE AND CORRECT TO THE BEST OF MY KNOWLEDGE AND BELIEF.

Fred B. Kerr Jr.
Registered Land Surveyor
#3950

SEAL:

SURVEYED March 29, 19 78

FARMINGTON, N. M.

NITED STATES
ENT OF THE INTERIOR
LOGICAL SURVEY

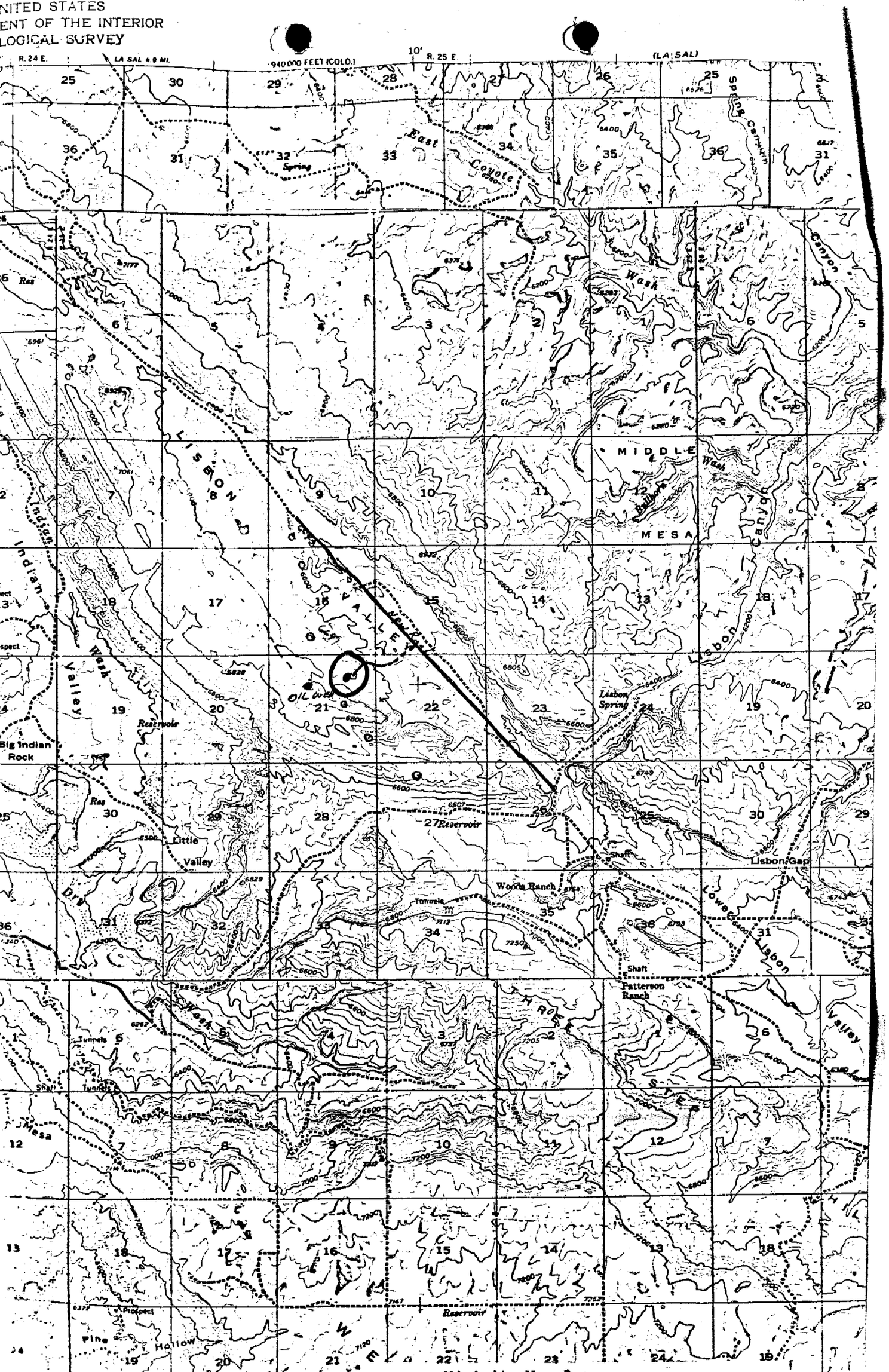

Vicinity Map for
MESA PETROLEUM COMPANY #3-Lisbon-Federal 21
1100'FNL 1100'FEL Sec 21-T30S-R25E
San Juan County, Utah

Mesa Petroleum Company

Formation Information and Drilling Procedures

WELL:

Lisbon Federal 21 No. 3

LOCATION:

1100' FNL & 1400' FEL
Sec. 21, T30S, R25E
San Juan Co., Utah

FEDERAL LEASE NO.:

U-094674

1) Geologic name of surface formation.

Lower Hermosa

2) Estimated tops of important geologic markers.

Paradox Salt	2200'
Base Salt	8850'
Pinkerton Trail	8850'
Leadville	8950'
Ouray	9360'
Elbert	9460'
McCracken	9620'
Cambrian	9720'
Total Depth	10,000'

3) Estimated depths at which anticipated water, oil, gas or other mineral-bearing formations are expected.

8950'	Gas
9620'	Oil & Gas

*4) Proposed casing program.

Surface: 13 3/8, 54.5 lb/ft, K-55, New casing to be set at 300'. Cement will be 350 sk. Class "B" with 2% $CaCl_2$.

Intermediate: 8 5/8, 24 lb/ft, K-55, New casing to be set at 2200'. Cement will be 250 sks. Halliburton Light with ¼ lb. Flocele/sk. followed by 500 sk. Class "B" with 6 ¼lb. Gilsonite/sk.

5) Specifications for pressure control equipment.

The attached schematic shows the type of blowout preventer to be used while drilling. The unit will be tested to 800 psi prior to drilling from under surface. Testing will be done by pressuring casing below the unit with the rig mud pump. Both blind and pipe rams will be tested in this manner, operation of the hydraulic system will be checked daily.

*(4) Production: 0-7300' 5 ½" 17 lb/ft J-55, New , 7300-10,000' 5 ½ 17 lb/ft N-80, new. Cementing will be in three stages, first stage will be 225 sk. Halliburton Light with ½ of 1% HR-7, salt saturated; second stage to be 450 sk. Halliburton; third stage to be 225 sk. Halliburton Light.

6) Drilling fluids.

Depth	Type	Viscosity	Weight	Fluid Loss C.C.
0-300'	Gel-Lime	35-40	8.6-9.0	N/C
300-2200	Low Solids	29-33	8.5-8.9	15
2200-10,000	Salt Mud	33-45	9.2-11.5	10

7) Auxiliary Equipment.

a. bit float
b. full opening stabbing valve to be used when kelly not in string

8) Logging - Coring - Testing program.

Logging: Dual Induction log
Borehole Compensated Acoustic log
Gamma Ray
Caliper
Formation Compensated Density log
Compensated Neutron log
Dip meter

Coring: None planned

Drill Stem Testing: None planned, but unexpected shows while drilling may be tested.

9) Abnormal temperatures, pressures or potential hazards.

No abnormal temperatures or pressures are expected.

The Leadville formation may contain a small amount of Hydrogen Sulfide gas. Monitors will be used while drilling this interval.

10) Starting date.

Anticipated starting date is April 28, 1978. Approximately 40 days will be needed to build roads and location and drill the well to total depth. If commercial, completion will commence immediately and require approximately 25 days.

ATTACHMENT TO POINT NO. 5
10 IN. 900 SERIES

SHAFFER TOOL WORKS

SHAFFER HYDRAULIC BLOWOUT PREVENTERS

(Patented)

TYPE LWS PREVENTERS—8", 3000 Lb. & 5000 lb.—10", 5000 Lb. 12", 3000 Lb.—13⅝", 5000 Lb.—16", 3000 Lb.

PARTS AND DIMENSIONAL ILLUSTRATIONS

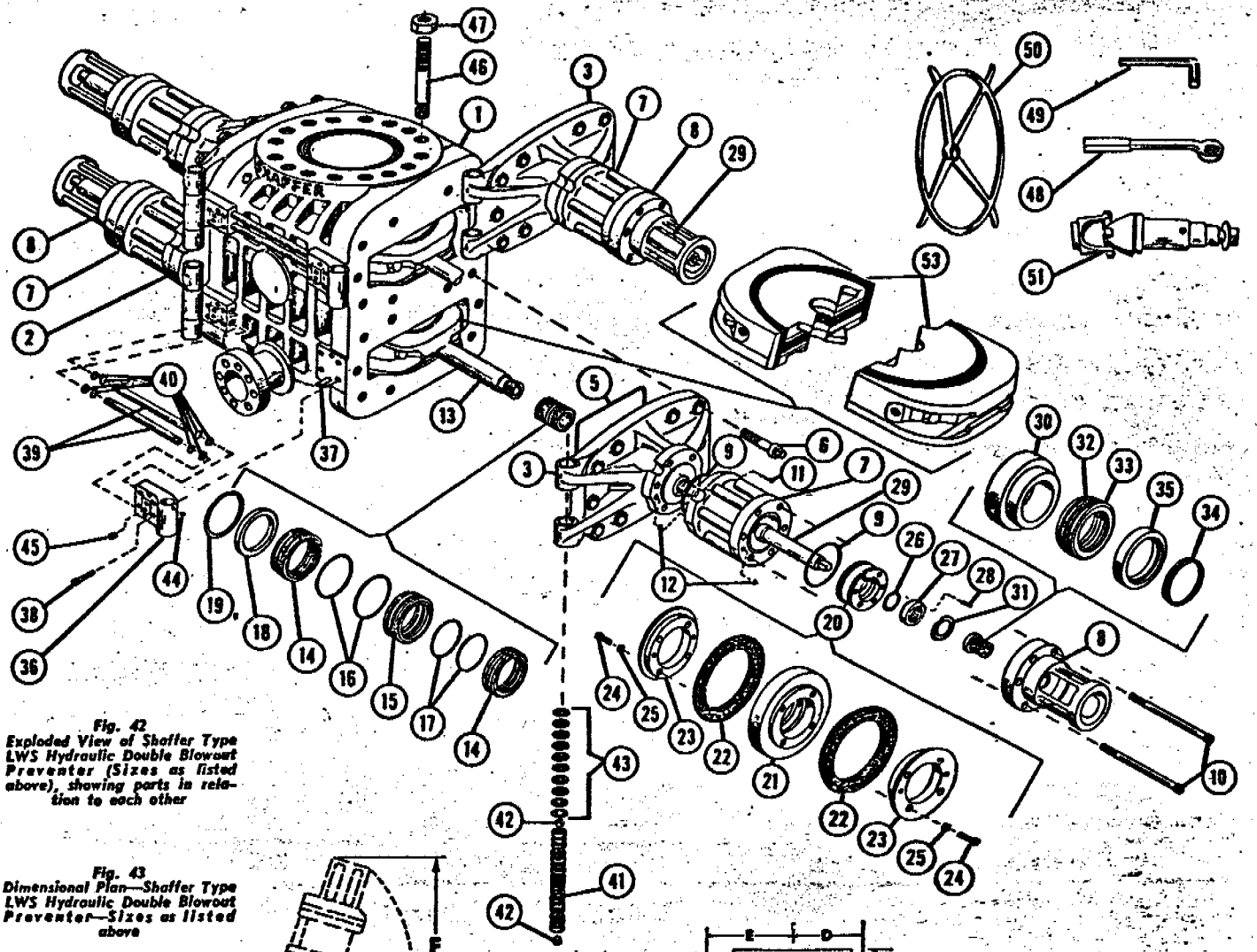

Fig. 42
Exploded View of Shaffer Type LWS Hydraulic Double Blowout Preventer (Sizes as listed above), showing parts in relation to each other

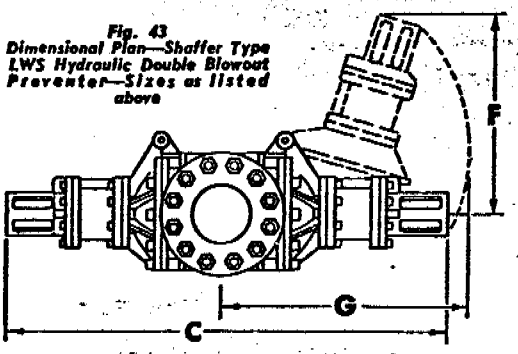

Fig. 43
Dimensional Plan—Shaffer Type LWS Hydraulic Double Blowout Preventer—Sizes as listed above

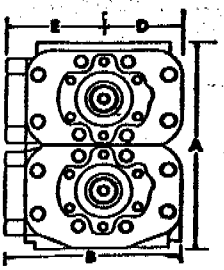

Fig. 44
Dimensional End Elevation—Shaffer Type LWS Hydraulic Double Blowout Preventer—Sizes as listed above

STANDARD ACCESSORIES

(50) 4 Hand Wheels

(48) 1 Door Wrench

(49) 1 Cylinder & Cylinder Head Wrench

(51) 4 Universal Joints

DIMENSIONAL AND ENGINEERING DATA ON ABOVE SIZES OF TYPE LWS PREVENTERS

Refer to Figs. 43 and 44

Size	Max. Service Press. Rating psi	Test Press. psi	Vertical Bore	Max. Ram Size	Approx. Weight Lbs. Studded Flange		A Height				B	C	D	E	F	G	Closing Ratio	Opening Ratio	U.S. Gals. Fluid To Close Rams	U.S. Gals. Fluid To Open Rams
							Single		Double											
					Single	Double	Studded Flange	Bolted Flange	Studded Flange	Bolted Flange	Width	Length	Center To Front	Center To Back	Door Open To Change Rams	Door Open To Change Rams				
8"	3,000	6,000	9"	7"	....	3,900	....	....	29¼"	41¼"	25¾"	79¼"	11¾"	14⅝"	23"	40"	5.6 to 1	1.89 to 1	2.75	2.3
8"	5,000	10,000	9"	7"	....	3,900	....	....	29¼"	45¼"	26¾"	79¼"	11¾"	14⅝"	23"	40"	5.6 to 1	1.89 to 1	2.75	2.3
10"	5,000	10,000	11"	8⅝"	5,600	7,000	34¼"	34¼"	33"	50¼"	28¾"	89¼"	12¾"	16"	32"	40"	5.5 to 1	1.5 to 1	3.25	2.7
12"	3,000	6,000	13⅝"	10⅝"	....	6,300	....	....	34¼"	47¼"	31¾"	92¼"	13¾"	18⅝"	37"	37"	5.56 to 1	1.89 to 1	3.35	2.9
13⅝"	5,000	10,000	13⅝"	10⅝"	6,800	9,700	36⅝"	36⅝"	38"	49¼"	33¾"	92¼"	14¾"	18⅝"	41"	54"	5.56 to 1	1.5 to 1	3.55	2.9
16"	3,000	6,000	16⅝"	13⅝"	....	8,500	....	....	38"	51"	36¾"	106¼"	16¾"	20⅝"	32"	40"	5.56 to 1	1.89 to 1	3.6	3.2

Mesa Petroleum Company

Development Plan for Surface Use

WELL:

Lisbon Federal 21 No. 3

LOCATION:

1100' FNL & 1400' FEL

Sec 21, T30S, R25E

San Juan Co., Utah

FEDERAL LEASE NO:

U 094674

1) Existing roads, (Shown in green)

The attached topographic map shows all existing roads within one mile of the proposed location. Access will be made by a county road 3500' to the northeast.

All existing roads are in good condition and will not have to be upgraded to handle normal drilling activity traffic.

2) Planned access road. (Shown in red)

The new access road will be approximately 4000' long and 20' wide. Maximum grade will be about 9%. There will be no turnouts or culverts required. Water bars will be used to aid drainage and prevent errosion. No surfacing material will be required. No gates, cattle guards, or fences will be crossed. No cuts or fills should be required.

3) Location of existing wells.

All wells (water, abandoned, disposal, and drilling) are shown and so-labled on the attached topographic map.

4) Location of tank batteries, production facilities and production, gathering and service lines.

All production facilities are to be contained within the proposed location .

Mesa owns another well, located in the NW/4 of Section 21 as shown on the topographic map. Gathering lines to this well are not controlled by Mesa.

5) Location and type of water supply.

Water for drilling will be trucked from the Lisbon Valley Plant, approximately 15 miles east. This water is privately owned.

6) Source of construction material.

Any construction material required for road or location will be excess material accumulated during building of such sites.

7) Methods of handling waste disposal.

(Refer to attached well site layout)

7) All burnable material will be burned in the trash pit when conditions permit. All nonburnable material (drilling fluids, cuttings, chemicals, etc.) will be stored in the reserve pit and thenburied when dry, any oil produced while drilling will be trucked from the location prior to leaving pit to dry. Pits will be fenced during dry out time, then completely back filled with dirt prior to preparing the location for production or abandonment.

A portable chemical toilet will be supplied for human waste.

8) Ancillary facilities.

No ancillary facilities are planned.

9) Well site layout.

The attached layout shows the drilling rig with all facilities. Cut and fill required is also indicated.

10) Plans for restoration of surface.

Restoration of the well site and access road will begin within 90 days of well completion, weather permitting.

Should the well be abandoned, the drilling site will be reshaped to its approximate former contour. The access road will be plowed and leveled. Both site and road will have top soil replaced and will be reseeded when germination can occur.

Should the well be commercial, that portion of the location not needed for operation will be repaired as above. The portion of the location needed for daily production operations, and the access road, will be kept clean and in good repair.

In either case, clean up of the site will include burning of any safely burnable material, filling of all pits, carrying away of all nonburnable material and chemicals that cannot be buried. Any oil that has accumulated on the pits while drilling will be trucked away.

11) Other information.

General topography of the area may be seen on the attached map.

This location is on the south side of Lisbon Valley. The site will be on a gentle northward dipping slope. There are no creeks, rivers or lakes in the immediate area. The area is covered with sagebrush and cedar trees that have been chained down. The soil is a sandy clay. There was evidence of deer and small animal life.

The surface agency for the drill site and access road is the Bureau of Land Management.

There are no occupied dwellings in the area.

There were no archaeological or cultural sites visible on the location. The archaeologist's report is forthcoming.

12) John Alexander
3E Company, Inc.
P.O. Box 190
Farmington, NM 87401
Phone: 505-327-4020

13) I hereby certify that I or persons under my direct supervision, have inspected the proposed drill site and access route; that I am familiar with the conditions which presently exist; that the statements made in the plan are to the best of my knowledge, true and correct; and, that the work associated with the operations proposed herein will be performed by Mesa Petroleum Company and its contractors and sub-contractors in conformity with this plan and the terms and conditions under which it is approved.

4-31-70 John Alexander

John Alexander

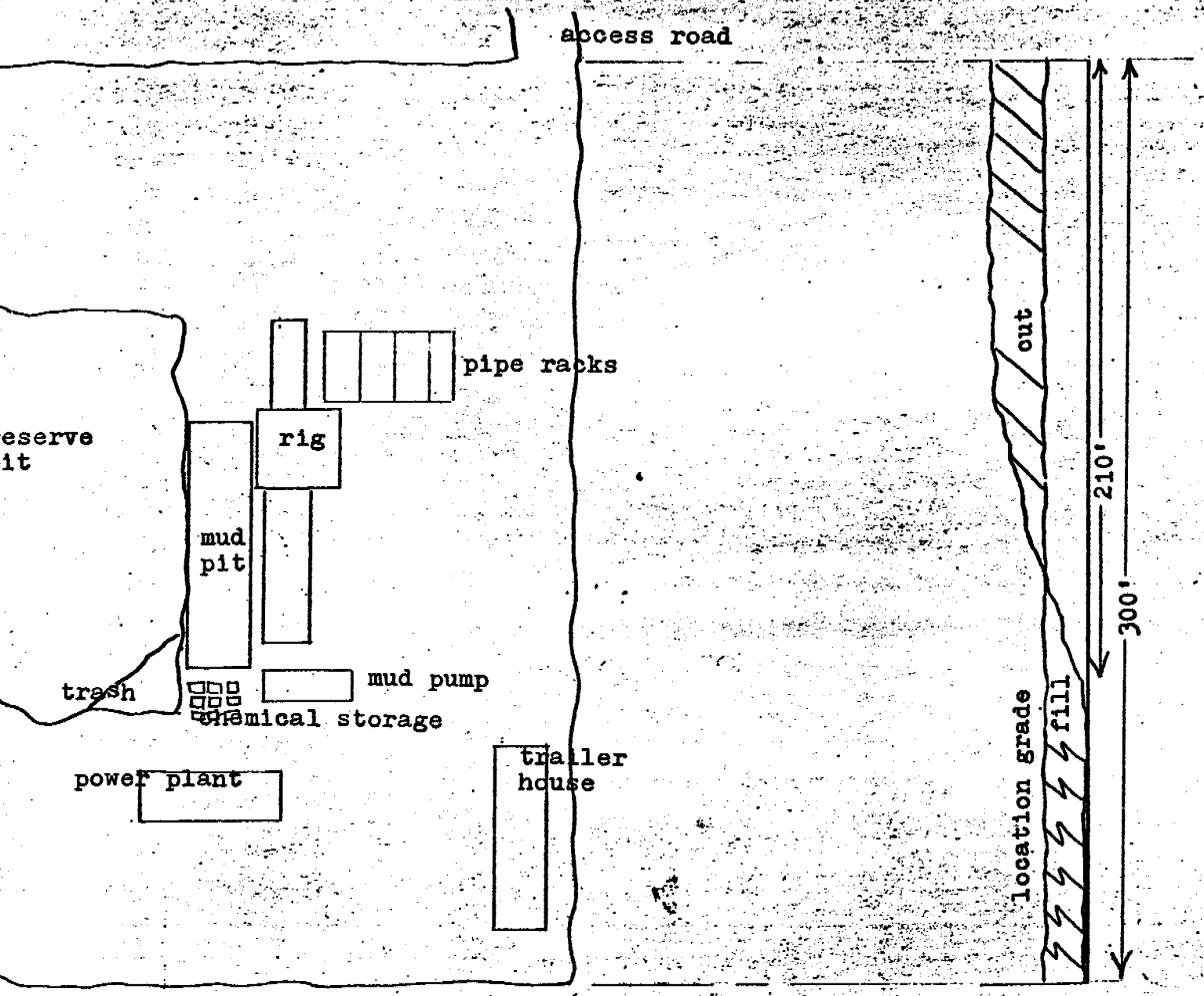

horozontal scale:1"=50'

verticle scale:1"=10'

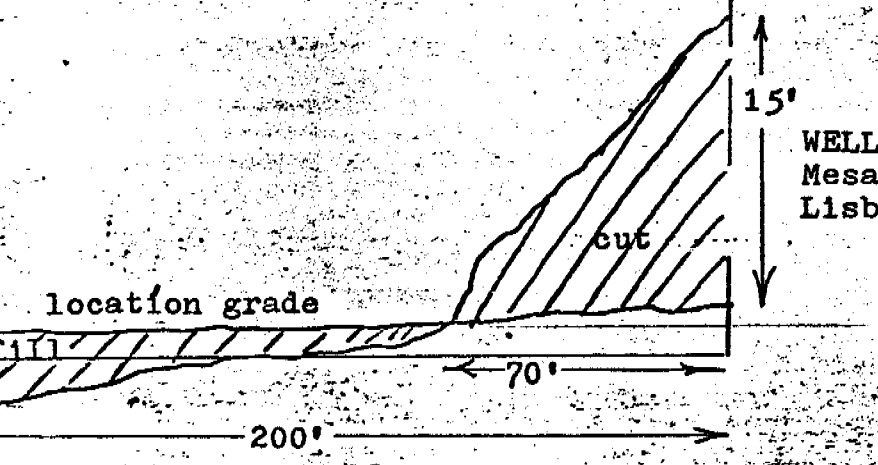

WELL SITE LAYOUT
Mesa Petroleum Co.
Lisbond Federal 21 #3

STATE OF UTAH
DIVISION OF OIL, GAS AND MINING

** FILE NOTATIONS **

Date: May 15 -

Operator: Mesa Petroleum

Well No: Lisbon Fed. 21-3

Location: Sec. 21 T. 30S R. 23E County: San Juan

File Prepared: /✓/ *Entered on N.I.D.:* /✓/

Card Indexed: /✓/ *Completion Sheet:* /✓/

API NUMBER: 43-037-30436

CHECKED BY:

Administrative Assistant SW

Remarks: Rule C-2 / Exceptional 2140 FNL & 1820 FWL

Petroleum Engineer OK

Remarks:

Director

Remarks:

INCLUDE WITHIN APPROVAL LETTER:

Bond Required: Bond Filed, *Survey Plat Required:* /___/

Order No. 70-3 /✓/ *Surface Casing Change to* _____ /___/

Rule C-3(c), Topographic exception/company owns or controls acreage within a 660' radius of proposed site /___/

O.K. Rule C-3 /___/ *O.K. In* _____ *Unit* /___/

Other:

/✓/ *Letter Written/~~Approved~~*

May 17, 1978

Mesa Petroleum Company
P.O. Box 2009
Amarillo, Texas 79105

Re: Well No. Lisbon-Federal 21-3
Sec. 21, T. 30 S, R. 25 E,
San Juan County, Utah

Gentlemen:

Insofar as this office is concerned, approval to drill the above referred to well is hereby granted in accordance with the Order issued in Cause No. 70-3.

Should you determine that it will be necessary to plug and abandon this well, you are hereby requested to immediately notify the following:

PATRICK L. DRISCOLL - Chief Petroleum Engineer
HOME: 582-7247
OFFICE: 533-5771

Enclosed please find Form OGC-8-X, which is to be completed whether or not water sands (aquifers) are encountered during drilling.

Further, it is requested that this Division be notified within 24 hours after drilling operations commence, and that the drilling contractor and rig number be identified.

The API number assigned to this well is 43-037-30426.

Very truly yours,

DIVISION OF OIL, GAS, AND MINING

CLEON B. FEIGHT
Director

Form 9-331
(May 1963)

UNITED STATES
DEPARTMENT OF THE INTERIOR
GEOLOGICAL SURVEY

SUBMIT IN TRIPLICATE*
(Other instructions on reverse side)

Form approved.
Budget Bureau No. 42-R1424.

SUNDRY NOTICES AND REPORTS ON WELLS

(Do not use this form for proposals to drill or to deepen or plug back to a different reservoir. Use "APPLICATION FOR PERMIT—" for such proposals.)

5. LEASE DESIGNATION AND SERIAL NO.: U-094674

6. IF INDIAN, ALLOTTEE OR TRIBE NAME:

7. UNIT AGREEMENT NAME:

8. FARM OR LEASE NAME: Lisbon Federal

9. WELL NO.: #3-21

10. FIELD AND POOL, OR WILDCAT: McCracken S.S. Little Valley Leadville

11. SEC., T., R., M., OR BLK. AND SURVEY OR AREA: Sec. 21, T30S, R25E

12. COUNTY OR PARISH: San Juan

13. STATE: Utah

1. OIL WELL [ ] GAS WELL [X] OTHER

2. NAME OF OPERATOR: Mesa Petroleum Co.

3. ADDRESS OF OPERATOR: P. O. Box 2009, Amarillo, Tx., 79189

4. LOCATION OF WELL (Report location clearly and in accordance with any State requirements.* See also space 17 below.)
At surface: 1100' FNL & 1400' FEL

14. PERMIT NO.:

15. ELEVATIONS (Show whether DF, RT, GR, etc.): 6710' GL

16. Check Appropriate Box To Indicate Nature of Notice, Report, or Other Data

NOTICE OF INTENTION TO:				SUBSEQUENT REPORT OF:			
TEST WATER SHUT-OFF	[ ]	PULL OR ALTER CASING	[ ]	WATER SHUT-OFF	[ ]	REPAIRING WELL	[ ]
FRACTURE TREAT	[ ]	MULTIPLE COMPLETE	[ ]	FRACTURE TREATMENT	[ ]	ALTERING CASING	[ ]
SHOOT OR ACIDIZE	[ ]	ABANDON*	[ ]	SHOOTING OR ACIDIZING	[ ]	ABANDONMENT*	[ ]
REPAIR WELL	[ ]	CHANGE PLANS	[ ]	(Other) Commence Drilling Oper.			[X]
(Other)				(NOTE: Report results of multiple completion on Well Completion or Recompletion Report and Log form.)			

17. DESCRIBE PROPOSED OR COMPLETED OPERATIONS (Clearly state all pertinent details, and give pertinent dates, including estimated date of starting any proposed work. If well is directionally drilled, give subsurface locations and measured and true vertical depths for all markers and zones pertinent to this work.)*

Spudded well @ 11:00 A.M., 8/27/78. Drilled 12¼" hole to 277'. Ran 7 jts 13 3/8" 54.50# K55 ST&C, set @ 277' KB. Cemented w/320 sxs Class "B", w/2% Cacl. PD @ 2:00 A.M., 8/31/78. Good returns throughout job, circ'd cmt to surface.

Present Operations - drilling ahead.

RECEIVED
SEP 1 1978
DIVISION OF OIL, GAS, & MINING

18. I hereby certify that the foregoing is true and correct

SIGNED [signature] TITLE Staff Engineer DATE 8/31/78

(This space for Federal or State office use)

APPROVED BY _____ TITLE _____ DATE _____

CONDITIONS OF APPROVAL, IF ANY:

U.S.G.S. Durango (3), Utah OGCC (2)

*See Instructions on Reverse Side

Form 9-331
(May 1963)

UNITED STATES
DEPARTMENT OF THE INTERIOR
GEOLOGICAL SURVEY

SUBMIT IN TRIPLICATE*
(Other instructions on reverse side)

Form approved.
Budget Bureau No. 42-R1424.

SUNDRY NOTICES AND REPORTS ON WELLS

(Do not use this form for proposals to drill or to deepen or plug back to a different reservoir. Use "APPLICATION FOR PERMIT—" for such proposals.)

5. LEASE DESIGNATION AND SERIAL NO.: U-094674

6. IF INDIAN, ALLOTTEE OR TRIBE NAME:

1. OIL WELL [ ] GAS WELL [X] OTHER

7. UNIT AGREEMENT NAME:

2. NAME OF OPERATOR: MESA PETROLEUM CO.

8. FARM OR LEASE NAME: Lisbon Federal

3. ADDRESS OF OPERATOR: P. O. BOX 2009, AMARILLO, TEXAS 79189

9. WELL NO.: #3-21

4. LOCATION OF WELL (Report location clearly and in accordance with any State requirements.* See also space 17 below.) At surface: 1100' FNL & 1400' FEL

10. FIELD AND POOL, OR WILDCAT: McCracken S.S. ~~Little Valley-Leadville~~

11. SEC., T., R., M., OR BLK. AND SURVEY OR AREA: Sec. 21, T30S, R25E

14. PERMIT NO.:

15. ELEVATIONS (Show whether DF, RT, GR, etc.): 6710' GL

12. COUNTY OR PARISH: San Juan

13. STATE: Utah

16. **Check Appropriate Box To Indicate Nature of Notice, Report, or Other Data**

NOTICE OF INTENTION TO:				SUBSEQUENT REPORT OF:			
TEST WATER SHUT-OFF	[ ]	PULL OR ALTER CASING	[ ]	WATER SHUT-OFF	[ ]	REPAIRING WELL	[ ]
FRACTURE TREAT	[ ]	MULTIPLE COMPLETE	[ ]	FRACTURE TREATMENT	[ ]	ALTERING CASING	[ ]
SHOOT OR ACIDIZE	[ ]	ABANDON*	[ ]	SHOOTING OR ACIDIZING	[ ]	ABANDONMENT*	[ ]
REPAIR WELL	[ ]	CHANGE PLANS	[ ]	(Other) ~~Continuing Drlg. operations~~			[X]
(Other)			[ ]	(NOTE: Report results of multiple completion on Well Completion or Recompletion Report and Log form.)			

17. DESCRIBE PROPOSED OR COMPLETED OPERATIONS (Clearly state all pertinent details, and give pertinent dates, including estimated date of starting any proposed work. If well is directionally drilled, give subsurface locations and measured and true vertical depths for all markers and zones pertinent to this work.)*

Drilled 12¼" hole to 1223'. Lost returns and squeeze cemented with total of 200 sacks "B" and 600 sacks "Thix-Set". Dry drilled from 1223' to 1640'. Ran 39 jts 10 3/4" 40.5# K-55 ST&C csg. Set csg @ 1620'. Cmt'd w/125 sacks "B" w/3/4% CFR-2 & 2% Cacl. Plug down @ 9:40 P.M. Ran Texas Pattern shoe on btm and cmt baskets @ 1220', 100', and 95'. Cmt'd from surface w/35 sxs "Lite" w/3% Cacl, job complete @ 10:00 P.M. 9/12/78.

Present operations - drilling ahead.

RECEIVED SEP 18 1978 GAS & MINING

18. I hereby certify that the foregoing is true and correct

SIGNED J. E. Vobler TITLE Supervisor, Drlg. & Prod. DATE 9/13/78

(This space for Federal or State office use)

APPROVED BY _____ TITLE _____ DATE _____

CONDITIONS OF APPROVAL, IF ANY:

USGS Durango (3), Utah OGCC (2)

*See Instructions on Reverse Side

Form 9-331
(May 1963)

UNITED STATES
DEPARTMENT OF THE INTERIOR
GEOLOGICAL SURVEY

SUBMIT IN TRIPLICATE*
(Other instructions on reverse side)

Form approved.
Budget Bureau No. 42-R1424.

SUNDRY NOTICES AND REPORTS ON WELLS

(Do not use this form for proposals to drill or to deepen or plug back to a different reservoir. Use "APPLICATION FOR PERMIT—" for such proposals.)

5. LEASE DESIGNATION AND SERIAL NO.: U-094674

6. IF INDIAN, ALLOTTEE OR TRIBE NAME:

1. OIL WELL [ ] GAS WELL [X] OTHER

7. UNIT AGREEMENT NAME:

2. NAME OF OPERATOR: MESA PETROLEUM CO.

8. FARM OR LEASE NAME: Lisbon Federal

3. ADDRESS OF OPERATOR: P. O. BOX 2009, AMARILLO, TEXAS 79189

9. WELL NO.: #3-21

4. LOCATION OF WELL (Report location clearly and in accordance with any State requirements.* See also space 17 below.) At surface: 1100' FNL & 1400' FEL

10. FIELD AND POOL, OR WILDCAT: McCracken S.S. Little Valley Leadville

11. SEC., T., R., M., OR BLK. AND SURVEY OR AREA: Sec. 21, T30S, R25E

14. PERMIT NO.:

15. ELEVATIONS (Show whether DF, RT, GR, etc.): 6710' GL

12. COUNTY OR PARISH: San Juan

13. STATE: Utah

16. Check Appropriate Box To Indicate Nature of Notice, Report, or Other Data

NOTICE OF INTENTION TO:				SUBSEQUENT REPORT OF:			
TEST WATER SHUT-OFF	[ ]	PULL OR ALTER CASING	[ ]	WATER SHUT-OFF	[ ]	REPAIRING WELL	[ ]
FRACTURE TREAT	[ ]	MULTIPLE COMPLETE	[ ]	FRACTURE TREATMENT	[ ]	ALTERING CASING	[ ]
SHOOT OR ACIDIZE	[ ]	ABANDON*	[ ]	SHOOTING OR ACIDIZING	[ ]	ABANDONMENT*	[ ]
REPAIR WELL	[ ]	CHANGE PLANS	[ ]	(Other) Continuing Drlg. Operations			[X]
(Other)			[ ]	(NOTE: Report results of multiple completion on Well Completion or Recompletion Report and Log form.)			

17. DESCRIBE PROPOSED OR COMPLETED OPERATIONS (Clearly state all pertinent details, and give pertinent dates, including estimated date of starting any proposed work. If well is directionally drilled, give subsurface locations and measured and true vertical depths for all markers and zones pertinent to this work.)*

Drilled 9 7/8" hole to 2380'. Ran 58 jts 8 5/8" 24# K55 csg w/special clearance couplings, Texas Pattern shoe and insert float. Landed csg @ 2380'. Cmt'd w/500 sxs "B" w/3/4% CFR-2, 2% Cacl, 18% salt, ¼# flocele. P.D. 9:00 A.M., 9/20/78. Had full returns while cementing. Set Slips and cut off. NU BOP's. Tested to 1000 psi, OK.

Presently - drilling ahead.

RECEIVED OCT 5 1978 DIVISION OF OIL, GAS & MINING

18. I hereby certify that the foregoing is true and correct

SIGNED [signature] TITLE Staff Engineer DATE 9/29/78

(This space for Federal or State office use)

APPROVED BY _____ TITLE _____ DATE _____

CONDITIONS OF APPROVAL, IF ANY:

USGS Durango (3), Utah OGCC (2)

*See Instructions on Reverse Side

Eastman Whipstock
A PETROLANE COMPANY

RECEIVED
NOV 30 1978
DIVISION OF
GAS, & MINING

REPORT of SUB-SURFACE DIRECTIONAL SURVEY

Mesa Petroleum Company

COMPANY

Lisbon Valley 3-21

WELL NAME

Moab, Utah

LOCATION

JOB NUMBER	TYPE OF SURVEY	DATE
RM1178-G0184	Gyro & Multi-Shot	11-26-78

SURVEY BY	OFFICE
Steve Thurston	Rocky Mountain District

FORM D-392 R2

MESA PETROLEUM CO.
JOB RM 1178-G0184
LISBON FEDERAL 3-21

DATE:

RECORD OF SURVEY

RADIUS OF CURVATURE METHOD

MEASURED DEPTH FEET	DRIFT ANGLE D M	DRIFT DIRECTION D	TRUE VERTICAL DEPTH FEET	RECTANGULAR COORDINATES FEET		DOG LEG SEVERITY DEG/100FT
0.	0 0	0	0.00	0.00	0.00	0.0
100.	0 30	N 63 W	100.00	0.19 N	0.38 W	0.5
200.	0 15	N 39 W	200.00	0.60 N	0.89 W	0.3
300.	0 30	S 78 W	299.99	0.81 N	1.47 W	0.4
400.	1 0	N 60 W	399.99	1.01 N	2.74 W	0.7
500.	0 45	N 28 W	499.97	2.08 N	3.77 W	0.5
600.	1 15	N 2 E	599.96	3.76 N	4.16 W	0.7
700.	1 45	N 21 E	699.92	6.32 N	3.64 W	0.7
800.	2 0	N 26 E	799.87	9.32 N	2.38 W	0.3
900.	2 15	N 26 E	899.80	12.64 N	0.71 W	0.2
1000.	2 30	N 22 E	999.71	16.49 N	0.97 E	0.3
1100.	2 45	N 20 E	1099.61	20.70 N	2.61 E	0.3
1200.	3 0	N 21 E	1199.48	25.41 N	4.38 E	0.3
1300.	3 30	N 27 E	1299.32	30.59 N	6.68 E	0.6
1400.	3 15	N 35 E	1399.15	35.64 N	9.78 E	0.5
1500.	2 45	N 39 E	1499.01	39.88 N	12.87 E	0.5
1600.	3 0	N 44 E	1598.88	43.58 N	16.20 E	0.4
1700.	3 15	N 48 E	1698.74	47.36 N	20.10 E	0.3
1800.	3 30	N 49 E	1798.56	51.27 N	24.59 E	0.3
1900.	3 45	N 49 E	1898.36	55.41 N	29.29 E	0.2
2000.	3 15	N 49 E	1998.17	59.48 N	33.90 E	0.5
2100.	3 30	N 48 E	2098.00	63.33 N	38.38 E	0.3
2200.	2 30	N 47 E	2197.86	66.87 N	42.18 E	1.0
2300.	2 15	N 44 E	2297.77	69.77 N	45.14 E	0.3
2375.	2 45	N 52 E	2372.70	71.96 N	47.57 E	0.8
2500.	3 30	N 56 E	2497.51	75.97 N	53.08 E	0.6
2600.	3 15	N 54 E	2597.34	79.38 N	57.98 E	0.3
2700.	3 15	N 50 E	2697.18	82.84 N	62.38 E	0.2
2800.	3 30	N 51 E	2797.00	86.60 N	66.94 E	0.3
2900.	3 45	N 48 E	2896.80	90.70 N	71.74 E	0.3

MEASURED DEPTH FEET	DRIFT ANGLE D M	DRIFT DIRECTION D	TRUE VERTICAL DEPTH FEET	RECTANGULAR COORDINATES FEET		DOG LEG SEVERITY DEG/100FT
3000.	3 15	N 44 E	2996.62	94.94 N	76.13 E	0.6
3100.	3 45	N 45 E	3096.43	99.30 N	80.41 E	0.5
3200.	4 0	N 44 E	3196.20	104.18 N	85.15 E	0.3
3300.	4 30	N 44 E	3295.92	109.48 N	90.30 E	0.5
3400.	4 30	N 42 E	3395.61	115.19 N	95.68 E	0.2
3500.	4 45	N 40 E	3495.29	121.27 N	100.94 E	0.3
3600.	5 0	N 39 E	3594.93	127.83 N	106.34 E	0.3
3700.	5 15	N 38 E	3694.53	134.82 N	111.91 E	0.3
3800.	5 30	N 39 E	3794.09	142.16 N	117.74 E	0.3
3900.	4 30	N 39 E	3893.71	148.93 N	123.23 E	1.0
4000.	4 45	N 41 E	3993.38	155.11 N	128.41 E	0.3
4100.	5 0	N 40 E	4093.02	161.57 N	133.93 E	0.3
4200.	4 45	N 38 E	4192.66	168.16 N	139.27 E	0.3
4300.	4 15	N 34 E	4292.34	174.51 N	143.88 E	0.6
4400.	4 0	N 3 E	4392.08	181.28 N	146.14 E	2.2
4500.	4 30	N 24 E	4491.80	188.42 N	147.86 E	1.6
4600.	4 30	N 11 E	4591.50	195.88 N	150.21 E	1.0
4700.	3 45	N 11 E	4691.23	202.98 N	151.59 E	0.8
4800.	3 30	N 9 E	4791.03	209.16 N	152.68 E	0.3
4900.	3 45	N 10 E	4890.83	215.38 N	153.72 E	0.3
5000.	4 30	N 10 E	4990.57	222.47 N	154.97 E	0.8
5100.	5 0	N 8 E	5090.22	230.64 N	156.27 E	0.5
5200.	5 45	N 11 E	5189.78	239.88 N	157.81 E	0.8
5300.	6 0	N 10 E	5289.25	249.98 N	159.68 E	0.3
5400.	6 30	N 11 E	5388.66	260.68 N	161.66 E	0.5
5500.	6 30	N 10 E	5488.01	271.78 N	163.78 E	0.1
5600.	6 30	N 10 E	5587.37	282.93 N	165.68 E	0.0
5700.	6 0	N 8 E	5686.77	293.68 N	167.39 E	0.5
5800.	5 0	N 9 E	5786.30	303.16 N	168.81 E	1.0
5900.	4 30	N 1 E	5885.96	311.40 N	169.53 E	0.8

MEASURED DEPTH FEET	DRIFT ANGLE D	DRIFT ANGLE M	DRIFT DIRECTION D	TRUE VERTICAL DEPTH FEET	RECTANGULAR COORDINATES FEET		DOG LEG SEVERITY DEG/100FT
6000.	4	0	N 3 E	5985.68	318.81 N	169.78 E	0.5
6100.	4	30	N 2 E	6085.41	326.22 N	170.11 E	0.5
6200.	4	45	N 1 E	6185.08	334.28 N	170.39 E	0.3
6300.	5	0	N 2 E	6284.71	342.77 N	170.58 E	0.3
6400.	5	15	N 3 E	6384.31	351.70 N	170.94 E	0.3
6500.	5	30	N 4 E	6483.87	361.08 N	171.51 E	0.3
6600.	5	45	N 5 E	6583.39	370.81 N	172.28 E	0.3
6700.	6	0	N 6 E	6682.86	381.01 N	173.26 E	0.3
6800.	6	15	N 7 E	6782.29	391.61 N	174.47 E	0.3
6900.	6	30	N 7 E	6881.67	402.62 N	175.82 E	0.3
7000.	6	45	N 7 E	6981.00	414.08 N	177.23 E	0.2
7100.	6	45	N 6 E	7080.30	425.74 N	178.56 E	0.1
7200.	7	0	N 7 E	7179.58	437.68 N	179.91 E	0.3
7300.	7	15	N 14 E	7278.80	449.83 N	182.17 E	0.9
7400.	8	0	N 15 E	7377.92	462.67 N	185.49 E	0.8
7500.	8	30	N 14 E	7476.88	476.56 N	189.08 E	0.5
7600.	8	30	N 14 E	7575.78	490.91 N	192.66 E	0.0
7700.	8	0	N 12 E	7674.75	504.88 N	195.89 E	0.6
7800.	8	0	N 11 E	7773.77	518.53 N	198.66 E	0.1
7900.	8	0	N 15 E	7872.79	532.08 N	201.78 E	0.6
8000.	8	0	N 12 E	7971.82	545.61 N	205.04 E	0.4
8100.	8	30	N 10 E	8070.78	559.70 N	207.78 E	0.6
8200.	8	30	N 11 E	8169.68	574.23 N	210.47 E	0.1
8300.	9	0	N 11 E	8268.51	589.17 N	213.38 E	0.5
8400.	9	30	N 11 E	8367.21	604.94 N	216.44 E	0.5
8500.	10	0	N 12 E	8465.76	621.55 N	219.82 E	0.5
8600.	10	15	N 12 E	8564.20	638.73 N	223.47 E	0.2
8700.	10	15	N 12 E	8662.61	656.13 N	227.17 E	0.0
8800.	10	0	N 12 E	8761.05	673.32 N	230.82 E	0.2
8900.	10	0	N 14 E	8859.53	690.24 N	234.73 E	0.3

MEASURED DEPTH FEET	DRIFT ANGLE D	DRIFT ANGLE M	DRIFT DIRECTION D	TRUE VERTICAL DEPTH FEET	RECTANGULAR COORDINATES FEET				DOG LEG SEVERITY DEG/100FT
9000.	10	0	N 13 E	8958.01	707.18	N	238.78	E	0.2
9100.	10	0	N 13 E	9056.49	724.04	N	242.69	E	0.0
9200.	10	0	N 12 E	9154.97	740.98	N	246.48	E	0.2
9300.	10	0	N 11 E	9253.45	758.01	N	249.91	E	0.2
9400.	10	0	N 14 E	9351.93	774.96	N	253.67	E	0.5
9500.	10	0	N 10 E	9450.41	791.94	N	257.28	E	0.7
9600.	9	45	N 10 E	9548.93	808.88	N	260.26	E	0.3
9700.	10	0	N 11 E	9647.44	825.73	N	263.38	E	0.3
9800.	9	45	N 11 E	9745.96	842.58	N	266.66	E	0.3
9900.	10	15	N 15 E	9844.44	859.50	N	270.57	E	0.9
9936.	11	0	N 14 E	9879.82	865.93	N	272.23	E	2.1

FINAL CLOSURE - DIRECTION: N 17 DEGS 27 MINS 7 SECS E
DISTANCE: 907.71 FEET

PLAN

EASTMAN WHIPSTOCK, INC.

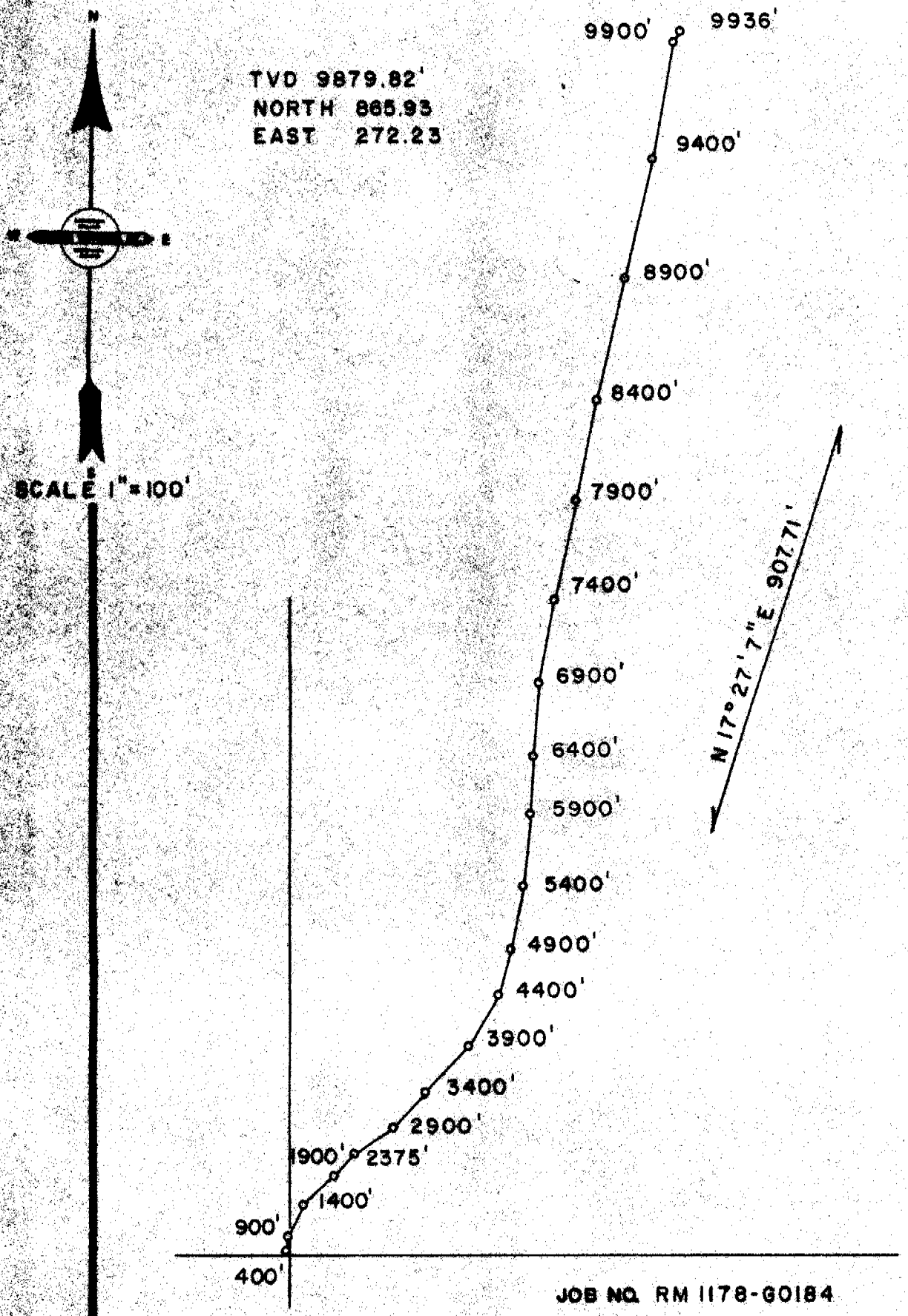

JOB NO. RM 1178-G0184

December 5, 1978

MEMO TO FILE

Re: MESA PETROLEUM
Well No. 21-3 Lisbon Federal
Sec. 21, T. 30S, R. 25E
San Juan County, Utah

The following plugging information for the above well was given. The pertinent data is:

Plugs set:
#1 9650' - 9500' across top of Mississippian
#2 9450' - 9300' base of Salt Wash
#3 4700' - 4500' Silky shale
#4 2450' - 2300' Bottom of 5/8" string
#5 25' - Surface

A regulation dry hole marker was erected.

PATRICK L. DRISCOLL
CONSULTANT

PLD/lw
cc: U.S. Geological Survey
Jerry Long

Form 9-331
(May 1963)

UNITED STATES
DEPARTMENT OF THE INTERIOR
GEOLOGICAL SURVEY

SUBMIT IN TRIPLICATE*
(Other instructions on reverse side)

Form approved.
Budget Bureau No. 42-R1424.

SUNDRY NOTICES AND REPORTS ON WELLS

(Do not use this form for proposals to drill or to deepen or plug back to a different reservoir. Use "APPLICATION FOR PERMIT—" for such proposals.)

5. LEASE DESIGNATION AND SERIAL NO.: U-094674

6. IF INDIAN, ALLOTTEE OR TRIBE NAME:

1. OIL WELL ☐ GAS WELL ☐ OTHER Dry

7. UNIT AGREEMENT NAME:

2. NAME OF OPERATOR: Mesa Petroleum Co.

8. FARM OR LEASE NAME: Lisbon Federal

3. ADDRESS OF OPERATOR: P.O. Box 2009, Amarillo, TX 79189

9. WELL NO.: 3-21

4. LOCATION OF WELL (Report location clearly and in accordance with any State requirements.* See also space 17 below.) At surface: 1100' FNL 1400' FEL

10. FIELD AND POOL, OR WILDCAT: Little Valley

11. SEC., T., R., M., OR BLK. AND SURVEY OR AREA: 21-305-25E

14. PERMIT NO.:

15. ELEVATIONS (Show whether DF, RT, GR, etc.): 6710' GL 6726' KB

12. COUNTY OR PARISH: San Juan

13. STATE: NM

16. Check Appropriate Box To Indicate Nature of Notice, Report, or Other Data

NOTICE OF INTENTION TO:				SUBSEQUENT REPORT OF:			
TEST WATER SHUT-OFF	☐	PULL OR ALTER CASING	☐	WATER SHUT-OFF	☐	REPAIRING WELL	☐
FRACTURE TREAT	☐	MULTIPLE COMPLETE	☐	FRACTURE TREATMENT	☐	ALTERING CASING	☐
SHOOT OR ACIDIZE	☐	ABANDON*	☐	SHOOTING OR ACIDIZING	☐	ABANDONMENT*	X
REPAIR WELL	☐	CHANGE PLANS	☐	(Other)			
(Other)				(NOTE: Report results of multiple completion on Well Completion or Recompletion Report and Log form.)			

17. DESCRIBE PROPOSED OR COMPLETED OPERATIONS (Clearly state all pertinent details, and give pertinent dates, including estimated date of starting any proposed work. If well is directionally drilled, give subsurface locations and measured and true vertical depths for all markers and zones pertinent to this work.)*

Drilled to 9953'. Ran Dual Laterolog/GR, Compensated Densilog-Neutron/GR-Cal, BHC Acoustilog/GR-Cal and Dipmeter.
DST #1 4564-4642
IH 3294 psi, FH-3200psi
IF (15 min) GTS in 8 min. Rate 274 mcf to 108 mcf, 234-281 psi
ISI (30 min) 780 psi
FF (60 min) Rate 20.7 mcf to 12.7 mcf, 1262-375 psi
FSI (120 min) 1813 psi
Recovered 8' drilling mud below circulating sub. Gas - 100 ppm H_2S.
Plug #1 9650-9500, 45 sx G, .3% HR4, 18% salt
Plug #2 9450-9300, 45 sx G, .3% HR4, 18% salt
Plug #3 4700-4500, 115 sx G, 18% salt
Plug #4 2450-2300, 100 sx G, 18% salt
Plug #5 15 sx G at surface. All plugs displaced with 13-16 ppg mud
Well P&A'd 12/5/78. Rig released midnight 12/5/78.

Notification will be made when location is ready for inspection.

18. I hereby certify that the foregoing is true and correct

SIGNED C. Bud Crouch TITLE Staff Engineer DATE 12/6/78

(This space for Federal or State office use)

APPROVED BY _____ TITLE _____ DATE _____
CONDITIONS OF APPROVAL, IF ANY:

USGS Durango (3)
Utah OGCC (2)

*See Instructions on Reverse Side

Form 9-330
(Rev. 5-63)

UNITED STATES
DEPARTMENT OF THE INTERIOR
GEOLOGICAL SURVEY

SUBMIT IN DUPLICATE
(See other instructions on reverse side)

Form approved.
Budget Bureau No. 42-R355.5.

3

WELL COMPLETION OR RECOMPLETION REPORT AND LOG*

1a. TYPE OF WELL: OIL WELL [ ] GAS WELL [ ] DRY [X] Other

b. TYPE OF COMPLETION: NEW WELL [ ] WORK OVER [ ] DEEP-EN [ ] PLUG BACK [ ] DIFF. RESVR. [ ] Other

DEC 12 1978

2. NAME OF OPERATOR: Mesa Petroleum Co.

3. ADDRESS OF OPERATOR: P.O. Box 2009, Amarillo, TX 79189

4. LOCATION OF WELL (*Report location clearly and in accordance with any State requirements*)
At surface: 1100 FNL 1400 FEL
At top prod. interval reported below
At total depth: 230 FNL 1128 FEL

5. LEASE DESIGNATION AND SERIAL NO.: U-094674

6. IF INDIAN, ALLOTTEE OR TRIBE NAME:

7. UNIT AGREEMENT NAME:

8. FARM OR LEASE NAME: Lisbon Federal

9. WELL NO.: 3-21

10. FIELD AND POOL, OR WILDCAT: Little Valley

11. SEC., T., R., M., OR BLOCK AND SURVEY OR AREA: Sec. 21, T30S, R25E

14. PERMIT NO.:
DATE ISSUED: 5/23/78

12. COUNTY OR PARISH: San Juan
13. STATE: Utah

15. DATE SPUDDED	16. DATE T.D. REACHED	17. DATE COMPL. (*Ready to prod.*)	18. ELEVATIONS (DF, RKB, RT, GR, ETC.)*	19. ELEV. CASINGHEAD
8/27/78	11/25/78	P&A 12/4/78	6726 KB	6710

20. TOTAL DEPTH, MD & TVD	21. PLUG, BACK T.D., MD & TVD	22. IF MULTIPLE COMPL., HOW MANY*	23. INTERVALS DRILLED BY	ROTARY TOOLS	CABLE TOOLS
9953 / 9896			→	0-TD	

24. PRODUCING INTERVAL(S), OF THIS COMPLETION—TOP, BOTTOM, NAME (MD AND TVD)*

25. WAS DIRECTIONAL SURVEY MADE: Yes

26. TYPE ELECTRIC AND OTHER LOGS RUN: Dual Laterolog/GR, BHC Acoustilog/GR-Cal, CNL-Density/GR

27. WAS WELL CORED: No

28. CASING RECORD (*Report all strings set in well*)

CASING SIZE	WEIGHT, LB./FT.	DEPTH SET (MD)	HOLE SIZE	CEMENTING RECORD	AMOUNT PULLED
13 3/8	54.5	278	17 1/2	320 sxs	none
10 3/4	40.5	1620	12 1/4	125 sxs	none
8 5/8	24	2380	9 7/8	500 sxs	none

29. LINER RECORD

SIZE	TOP (MD)	BOTTOM (MD)	SACKS CEMENT*	SCREEN (MD)
none				

30. TUBING RECORD

SIZE	DEPTH SET (MD)	PACKER SET (MD)
none		

31. PERFORATION RECORD (*Interval, size and number*)

32. ACID, SHOT, FRACTURE, CEMENT SQUEEZE, ETC.

DEPTH INTERVAL (MD)	AMOUNT AND KIND OF MATERIAL USED

33.* PRODUCTION

DATE FIRST PRODUCTION: P&A'd 12/4/78
PRODUCTION METHOD (*Flowing, gas lift, pumping—size and type of pump*):
WELL STATUS (*Producing or shut-in*):

DATE OF TEST	HOURS TESTED	CHOKE SIZE	PROD'N. FOR TEST PERIOD	OIL—BBL.	GAS—MCF.	WATER—BBL.	GAS-OIL RATIO
			→				

FLOW. TUBING PRESS.	CASING PRESSURE	CALCULATED 24-HOUR RATE	OIL—BBL.	GAS—MCF.	WATER—BBL.	OIL GRAVITY-API (CORR.)
		→				

34. DISPOSITION OF GAS (*Sold, used for fuel, vented, etc.*)

TEST WITNESSED BY

35. LIST OF ATTACHMENTS

36. I hereby certify that the foregoing and attached information is complete and correct as determined from all available records

SIGNED [signature] TITLE Staff Engineer DATE 12/8/78

*(See Instructions and Spaces for Additional Data on Reverse Side)

xc: USGS Durango (2), Dvr. Office (1), D&M, M&M, Central Records, Accounting, Utah OGCC (2)

INSTRUCTIONS

General: This form is designed for submitting a complete and correct well completion report and log on all types of lands and leases to either a Federal agency or a State agency, or both, pursuant to applicable Federal and/or State laws and regulations. Any necessary special instructions concerning the use of this form and the number of copies to be submitted, particularly with regard to local, area, or regional procedures and practices, either are shown below or will be issued by, or may be obtained from, the local Federal and/or State office. See instructions on items 22 and 24, and 33, below regarding separate reports for separate completions.
If not filed prior to the time this summary record is submitted, copies of all currently available logs (drillers, geologists, sample and core analysis, all types electric, etc.), formation and pressure tests, and directional surveys, should be attached hereto, to the extent required by applicable Federal and/or State laws and regulations. All attachments should be listed on this form, see item 35.
Item 4: If there are no applicable State requirements, locations on Federal or Indian land should be described in accordance with Federal requirements. Consult local State or Federal office for specific instructions.
Item 18: Indicate which elevation is used as reference (where not otherwise shown) for depth measurements given in other spaces on this form and in any attachments.
Items 22 and 24: If this well is completed for separate production from more than one interval zone (multiple completion), so state in item 22, and in item 24 show the producing interval, or intervals, top(s), bottom(s) and name(s) (if any) for only the interval reported in item 33. Submit a separate report (page) on this form, adequately identified, for each additional interval to be separately produced, showing the additional data pertinent to such interval.
Item 29: *"Sacks Cement":* Attached supplemental records for this well should show the details of any multiple stage cementing and the location of the cementing tool.
Item 33: Submit a separate completion report on this form for each interval to be separately produced. (See instruction for items 22 and 24 above.)

37. SUMMARY OF POROUS ZONES:
SHOW ALL IMPORTANT ZONES OF POROSITY AND CONTENTS THEREOF; CORED INTERVALS; AND ALL DRILL-STEM TESTS, INCLUDING DEPTH INTERVAL TESTED, CUSHION USED, TIME TOOL OPEN, FLOWING AND SHUT-IN PRESSURES, AND RECOVERIES

FORMATION	TOP	BOTTOM	DESCRIPTION, CONTENTS, ETC.
Paradox Salt	2380	9402	
Molas	9470		
Leadville	9543		

38. GEOLOGIC MARKERS

NAME	TOP	
	MEAS. DEPTH	TRUE VERT. DEPTH
Paradox Salt	2380	2372
Base of Salt	9402	9351
Molas	9470	9418
Leadville	9543	9495

U.S. GOVERNMENT PRINTING OFFICE : 1963—O-683036
837-497