Scout Report sent out ☑

Noted in the NID File ☑

Location map pinned ☑

Approval or Disapproval Letter ☑

Date Completed, P. & A. or operations suspended

Pin changed on location map ☐

Affidavit and Record of A & P ☐

Water Shut-Off Test ☐

Gas-Oil Ratio Test ☐

Well Log Filed ☑

FILE NOTATIONS

Entered in N I D File	✓	Checked by Chief	✓
Entered On R R Sheet	✓	Copy N I D to Field Office	✓
Location Map Pinned	✓	Approval Letter	✓
Card Indexed	✓	Disapproval Letter	
I W R for State or Fee Land			

COMPLETION DATA:

Date Well Completed	5-4-58	Location Inspected	
OW ✓ WW	TA	Bond released	
GW OS	PA	State of Fee Land	

LOGS FILED

Driller's Log 5-19-58

Electric Logs (No.) 3

E E-I ✓ GR GR-N Micro ✓

Lat Mi-L Sonic Others 2 Radioactive (2)

Form 9-331 b
(April 1952)

Budget Bureau No. 42-R359.4.
Approval expires 12-31-60.

(SUBMIT IN TRIPLICATE)

UNITED STATES
DEPARTMENT OF THE INTERIOR
GEOLOGICAL SURVEY

Indian Agency Navajo

Allottee Tribal

Lease No. 14-20-603-355

SUNDRY NOTICES AND REPORTS ON WELLS

NOTICE OF INTENTION TO DRILL	X	SUBSEQUENT REPORT OF WATER SHUT-OFF	
NOTICE OF INTENTION TO CHANGE PLANS		SUBSEQUENT REPORT OF SHOOTING OR ACIDIZING	
NOTICE OF INTENTION TO TEST WATER SHUT-OFF		SUBSEQUENT REPORT OF ALTERING CASING	
NOTICE OF INTENTION TO REDRILL OR REPAIR WELL		SUBSEQUENT REPORT OF REDRILLING OR REPAIR	
NOTICE OF INTENTION TO SHOOT OR ACIDIZE		SUBSEQUENT REPORT OF ABANDONMENT	
NOTICE OF INTENTION TO PULL OR ALTER CASING		SUPPLEMENTARY WELL HISTORY	
NOTICE OF INTENTION TO ABANDON WELL			

(INDICATE ABOVE BY CHECK MARK NATURE OF REPORT, NOTICE, OR OTHER DATA)

Denver, Colorado March 24, 1958

Well No. Desert "A" 8 is located 1980 ft. from {S} line and 200 ft. from {W} line of sec. 18

NW/4 SW/4 Sec. 18 (¼ Sec. and Sec. No.) 41S (Twp.) 24E (Range) S.L.M. (Meridian)

Rathertford (Field) San Juan (County or Subdivision) Utah (State or Territory)

The elevation of the ungraded ground above sea level is 4680 ft.

DETAILS OF WORK

(State names of and expected depths to objective sands; show sizes, weights, and lengths of proposed casings; indicate mudding jobs, cementing points, and all other important proposed work)

Drill 17½" hole to approximately 150', set 150' of 13-3/8" conductor pipe and cement to surface. Drill 11" hole to approximately 1400', set 8-5/8" casing and cement to surface. Drill 7-7/8" hole to total depth of approximately 5750', run 5½" casing and cement with approximately 250 sacks. Complete in Paradox formation.

I understand that this plan of work must receive approval in writing by the Geological Survey before operations may be commenced.

Company Phillips Petroleum Company

Address 1200 Denver Club Bldg.

Denver 2, Colorado

By W. H. Schal

Title Division Superintendent

U. S. GOVERNMENT PRINTING OFFICE 16—84376-8

Company PHILLIPS PETROLEUM COMPANY

Lease DESERT "A" Well No. 8

Sec. 18, T. 41 SOUTH, R. 24 EAST S. L.M.

Location 1980' FROM THE SOUTH LINE AND 500' FROM THE WEST LINE.

Elevation 4680.3 UNGRADED GROUND

SAN JUAN COUNTY UTAH

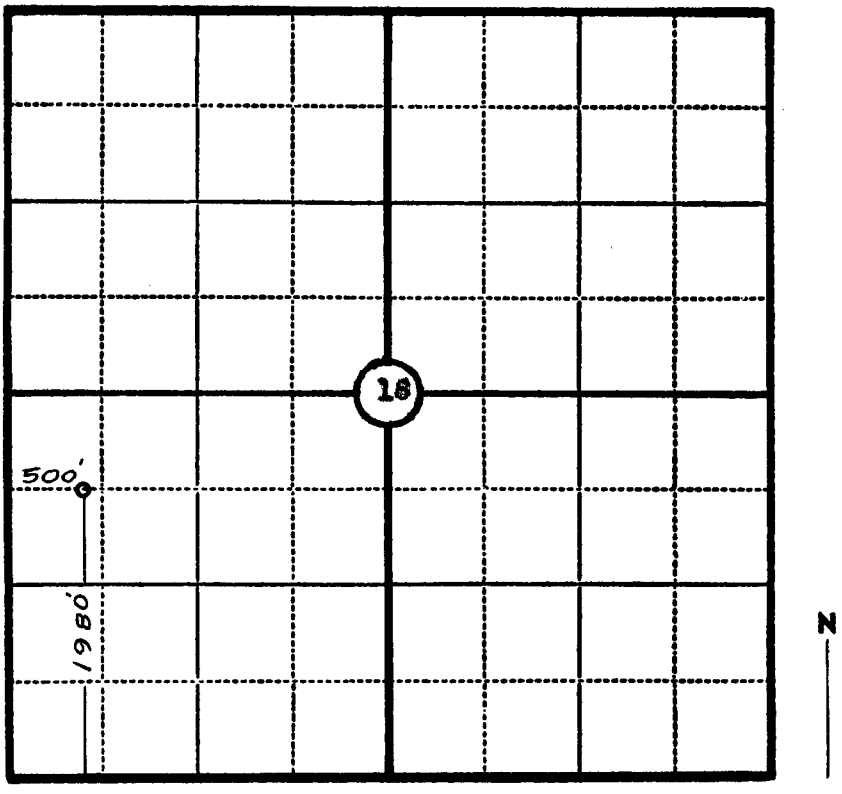

Scale—4 inches equal 1 mile.

This is to certify that the above plat was prepared from field notes of actual surveys made by me or under my supervision and that the same are true and correct to the best of my knowledge and belief.

James P. Leese

Seal:

Registered Land Surveyor.
JAMES P. LEESE
UTAH REG. NO. 1472

Surveyed 20 MARCH, 19 58

SAN JUAN ENGINEERING COMPANY, FARMINGTON, N. M.

March 25, 1958

Phillips Petroleum Company
1200 Denver Club Building
Denver 2, Colorado

Attention: W. M. Schul, Division Superintendent

Gentlemen:

This is to acknowledge receipt of your notice of intention to drill Well No. Desert A-8, which is to be located 1980 feet from the south line and 500 feet from the west line of Section 18, Township 41 South, Range 24 East, SLBM, San Juan County, Utah.

Please be advised that insofar as this office is concerned, approval to drill said well is hereby granted.

This approval terminates within 90 days if the above mentioned well is not spudded in within said period.

Yours very truly,

OIL & GAS CONSERVATION COMMISSION

CLEON B. FEIGHT
SECRETARY

CBF:cn

cc: Phil McGrath
USGS, Farmington,
New Mexico

Form 9-331 b
(April 1952)

Budget Bureau No. 42-R359.4.
Approval expires 12-31-60.

(SUBMIT IN TRIPLICATE)

UNITED STATES
DEPARTMENT OF THE INTERIOR
GEOLOGICAL SURVEY

Indian Agency Navajo

Allottee Tribal

Lease No. 14-20-603-353

SUNDRY NOTICES AND REPORTS ON WELLS

NOTICE OF INTENTION TO DRILL		SUBSEQUENT REPORT OF WATER SHUT-OFF	X
NOTICE OF INTENTION TO CHANGE PLANS		SUBSEQUENT REPORT OF SHOOTING OR ACIDIZING	
NOTICE OF INTENTION TO TEST WATER SHUT-OFF		SUBSEQUENT REPORT OF ALTERING CASING	
NOTICE OF INTENTION TO REDRILL OR REPAIR WELL		SUBSEQUENT REPORT OF REDRILLING OR REPAIR	
NOTICE OF INTENTION TO SHOOT OR ACIDIZE		SUBSEQUENT REPORT OF ABANDONMENT	
NOTICE OF INTENTION TO PULL OR ALTER CASING		SUPPLEMENTARY WELL HISTORY	
NOTICE OF INTENTION TO ABANDON WELL			

(INDICATE ABOVE BY CHECK MARK NATURE OF REPORT, NOTICE, OR OTHER DATA)

Denver, Colorado April 10, 1958

Desert "A"
Well No. 7 is located 1980 ft. from {S} line and 1980 ft. from {W} line of sec. 17

NE/4 SW/4 Sec. 17 (¼ Sec. and Sec. No.) 41S (Twp.) 24E (Range) S.L.M. (Meridian)

Ratherford (Field) San Juan (County or Subdivision) Utah (State or Territory)

The elevation of the derrick floor above sea level is 4708 ft.

DETAILS OF WORK

(State names of and expected depths to objective sands; show sizes, weights, and lengths of proposed casings; indicate mudding jobs, cementing points, and all other important proposed work)

Drilled to 5700'. Ran 5½" OD 15.5# and 14# casing set 5699' RKB. Cemented with 132 sacks regular cement, 100 sacks Diacel "D", 496# calcium chloride. Pumped plug to 5664' at 6:10 P.M. 3-28-58. Ran B. & R. temperature survey, checked top of cement at 2970'. Tested casing with 500# for 30 minutes, held OK.

I understand that this plan of work must receive approval in writing by the Geological Survey before operations may be commenced.

Company Phillips Petroleum Company

Address 1200 Denver Club Building
Denver 2, Colorado

By W. H. Kehl
Title Division Superintendent

Form 9-331 b
(April 1952)

Budget Bureau No. 42-R359.4.
Approval expires 12-31-60.

(SUBMIT IN TRIPLICATE)

UNITED STATES
DEPARTMENT OF THE INTERIOR
GEOLOGICAL SURVEY

Indian Agency Navajo

Allottee Tribal

Lease No. 14-20-603-353

N-14
4-28

SUNDRY NOTICES AND REPORTS ON WELLS

NOTICE OF INTENTION TO DRILL		SUBSEQUENT REPORT OF WATER SHUT-OFF	X
NOTICE OF INTENTION TO CHANGE PLANS		SUBSEQUENT REPORT OF SHOOTING OR ACIDIZING	
NOTICE OF INTENTION TO TEST WATER SHUT-OFF		SUBSEQUENT REPORT OF ALTERING CASING	
NOTICE OF INTENTION TO REDRILL OR REPAIR WELL		SUBSEQUENT REPORT OF REDRILLING OR REPAIR	
NOTICE OF INTENTION TO SHOOT OR ACIDIZE		SUBSEQUENT REPORT OF ABANDONMENT	
NOTICE OF INTENTION TO PULL OR ALTER CASING		SUPPLEMENTARY WELL HISTORY	
NOTICE OF INTENTION TO ABANDON WELL			

(INDICATE ABOVE BY CHECK MARK NATURE OF REPORT, NOTICE, OR OTHER DATA)

Denver, Colorado April 11, 19 58

Desert "A"
Well No. 8 is located 1980 ft. from {S} line and 500 ft. from {W} line of sec. 18

NW/4 SW/4 Sec. 18 (¼ Sec. and Sec. No.) 41S (Twp.) 24E (Range) S.L.M. (Meridian)

Ratherford (Field) San Juan (County or Subdivision) Utah (State or Territory)

The elevation of the derrick floor above sea level is 4694 ft.

DETAILS OF WORK

(State names of and expected depths to objective sands; show sizes, weights, and lengths of proposed casings; indicate mudding jobs, cementing points, and all other important proposed work)

Drilled to 1422'. Ran 8-5/8" OD 24# J55 casing set at 1421' RKB. Cemented with 330 sacks neat regular cement, 125 sacks Diacel "D", 616# calcium chloride, 161# Flocele, 650# Tuf-Plug, followed with 100 sacks regular cement on bottom. Bumped plug to 1381'. Cement did not circulate. Ran 1" pipe down annulus to 220' and re-cemented to surface with approximately 70 sacks regular cement. After 1 hour cement fell back approximately 30'. Re-cemented to surface by pouring approximately 20 sacks regular cement from surface. WOC 24 hours. Tested casing with 500# for 30 minutes, held OK. Job completed 4-5-58.

I understand that this plan of work must receive approval in writing by the Geological Survey before operations may be commenced.

Company Phillips Petroleum Company

Address 1700 Denver Club Bldg.
Denver 2, Colorado

By W. M. Schul
Title Division Superintendent

PHILLIPS PETROLEUM COMPANY

1200 Denver Club Building
Denver 2, Colorado

April 24, 1958

Mr. Cleon B. Feight
Secretary
Utah Oil & Gas Conservation Commission
State Capitol Building
Salt Lake City, Utah

Dear Mr. Feight:

Enclosed herewith you will find two copies of each of the following logs run on Phillips Petroleum - Aztec Oil and Gas Company's Desert "A" #8, San Juan County, Utah.

1. Schlumberger Induction-Electric Log
2. Schlumberger Micro Log

Very truly yours,

PHILLIPS PETROLEUM COMPANY

W. M. Schul
Division Superintendent

CCK:lb

Enclosures

It's Performance That Counts
FLITE FUEL — TROP-ARTIC

PHILLIPS PETROLEUM COMPANY

1200 Denver Club Building
Denver 2, Colorado

April 28, 1958

Mr. Cleon B. Feight
Secretary
Utah Oil & Gas Conservation Commission
State Capitol Building
Salt Lake City, Utah

Dear Mr. Feight:

Enclosed herewith you will find two copies of the following log ran on Phillips Petroleum - Aztec Oil and Gas Company's Desert "A" #8, San Juan County, Utah.

1. Welex Radioactivity Log

Very truly yours,

PHILLIPS PETROLEUM COMPANY

W. M. Schul
Division Superintendent

CCK:lb

Confidential
4-30-58
CB

16

It's Performance That Counts
FLITE FUEL — TROP-ARTIC

Form 9-331 b
(April 1952)

Budget Bureau No. 42-R359.4.
Approval expires 12-31-60.

(SUBMIT IN TRIPLICATE)

UNITED STATES
DEPARTMENT OF THE INTERIOR
GEOLOGICAL SURVEY

Indian Agency Navajo

Allottee Tribal

Lease No. 14-20-603-353

SUNDRY NOTICES AND REPORTS ON WELLS

NOTICE OF INTENTION TO DRILL		SUBSEQUENT REPORT OF WATER SHUT-OFF	X
NOTICE OF INTENTION TO CHANGE PLANS		SUBSEQUENT REPORT OF SHOOTING OR ACIDIZING	
NOTICE OF INTENTION TO TEST WATER SHUT-OFF		SUBSEQUENT REPORT OF ALTERING CASING	
NOTICE OF INTENTION TO REDRILL OR REPAIR WELL		SUBSEQUENT REPORT OF REDRILLING OR REPAIR	
NOTICE OF INTENTION TO SHOOT OR ACIDIZE		SUBSEQUENT REPORT OF ABANDONMENT	
NOTICE OF INTENTION TO PULL OR ALTER CASING		SUPPLEMENTARY WELL HISTORY	
NOTICE OF INTENTION TO ABANDON WELL			

(INDICATE ABOVE BY CHECK MARK NATURE OF REPORT, NOTICE, OR OTHER DATA)

Denver, Colorado April 29, 1958

Desert "A"
Well No. 8 is located 1980 ft. from {S} line and 500 ft. from {W} line of sec. 18

NW/4 SW/4 Sec. 18 — (¼ Sec. and Sec. No.)
41S — (Twp.)
24E — (Range)
S.L.M. — (Meridian)

Rutherford — (Field)
San Juan — (County or Subdivision)
Utah — (State or Territory)

The elevation of the derrick floor above sea level is 4694 ft.

DETAILS OF WORK

(State names of and expected depths to objective sands; show sizes, weights, and lengths of proposed casings; indicate mudding jobs, cementing points, and all other important proposed work)

Drilled to 5671'. Ran 5½" OD 15.5# and 14# J55 casing set at 5670' KB. Cemented with 132 sacks neat regular cement, 100 sacks Pozmix "D", 4% calcium chloride. Bumped plug to 5638' at 1:15 p.m. 4-21-58. Tested casing with 500# for 30 minutes, held OK.

I understand that this plan of work must receive approval in writing by the Geological Survey before operations may be commenced.

Company Phillips Petroleum Company

Address 1200 Denver Club Bldg.
Denver 2, Colorado

By W. G. Bethel

Title Division Superintendent

Budget Bureau No. 42-R355.4.
Approval expires 12-31-60.

Form 9-331

U. S. LAND OFFICE Navajo
SERIAL NUMBER 14-20-603-353
LEASE OR PERMIT TO PROSPECT Tribal

UNITED STATES
DEPARTMENT OF THE INTERIOR
GEOLOGICAL SURVEY

LOG OF OIL OR GAS WELL

LOCATE WELL CORRECTLY

Company Phillips Petroleum Company - Antec Oil & Gas Company Address 1200 Denver Club Bldg. Denver 2, Colorado

Lessor or Tract Desert "A" Field Ratherford State Utah

Well No. 8 Sec. 18 T. 41S R. 24E Meridian S.L.M. County San Juan

Location [illegible] ft. [N.] of S Line and 900 ft. [E.] of W Line of Section 18 Elevation 4694 (Derrick floor relative to sea level)

The information given herewith is a complete and correct record of the well and all work done thereon so far as can be determined from all available records.

Signed [illegible]

Date May 15, 1958 Title Division Superintendent

The summary on this page is for the condition of the well at above date.

Commenced drilling April 1, 1958 Finished drilling April 23, 1958

OIL OR GAS SANDS OR ZONES

(Denote gas by G)

No. 1, from 5450 to 5614 No. 4, from to

No. 2, from to No. 5, from to

No. 3, from to No. 6, from to

IMPORTANT WATER SANDS

No. 1, from to No. 3, from to

No. 2, from to No. 4, from to

CASING RECORD

Size casing	Weight per foot	Threads per inch	Make	Amount	Kind of shoe	Cut and pulled from	Perforated From—	Perforated To—	Purpose
13-3/8"	48#	8R	Armco	160'	Baker				
8-5/8"	24#	8R	J-55	1215'	Baker				
5-1/2"	15.5#	8R	J-55	1281'	Baker		5450-[illegible], [illegible]-5502, 5533-44,		
5-1/2"	14#	8R	J-55	5568'			5568-90, 5598-5614.		

MUDDING AND CEMENTING RECORD

Size casing	Where set	Number sacks of cement	Method used	Mud gravity	Amount of mud used
13-3/8"	177'	175	Circ.		
8-5/8"	1421'	645	Circ.		
5-1/2"	1670'	232	Halliburton		

PLUGS AND ADAPTERS

Heaving plug—Material Length Depth set

Adapters—Material Size

SHOOTING RECORD

FOLD MARK

13-3/8"	177'	175	Circ.			
8-5/8"	1421'	645	Circ.			
5-1/2"	5670'	232	Halliburton			

FOLD | MARK

PLUGS AND ADAPTERS

Heaving plug—Material ..... Length ..... Depth set .....

Adapters—Material ..... Size .....

SHOOTING RECORD

Size	Shell used	Explosive used	Quantity	Date	Depth shot	Depth cleaned out

TOOLS USED

Rotary tools were used from ground feet to 5671 feet, and from ..... feet to ..... feet

Cable tools were used from ..... feet to ..... feet, and from ..... feet to ..... feet

DATES

May 15, 1958 Put to producing May 4, 1958

The production for the first 24 hours was 206 barrels of fluid of which 100 % was oil; ..... % emulsion; ..... % water; and ..... % sediment. Gravity, °Bé. 41

If gas well, cu. ft. per 24 hours ..... Gallons gasoline per 1,000 cu. ft. of gas .....

Rock pressure, lbs. per sq. in. 518

EMPLOYEES

Moran Bros., Inc., Driller ....., Driller

....., Driller ....., Driller

FORMATION RECORD

FROM—	TO—	TOTAL FEET	FORMATION
870	1413	543	Wingate
1413	2238	825	Chinle
2238	2300	62	Shinarump
2300	2380	80	Moenkopi
2380	2540	160	Cutler
2540	2685	145	De Chelly
2685	4452	1767	Organ Rock
4452	5453	1001	Upper Hermosa
5453	5614	161	Paradox

MAY 19 1958

FROM— TO— TOTAL FEET FORMATION

[OVER]

13—43094-4

FORMATION RECORD—CONTINUED

16—43094-2 U. S. GOVERNMENT PRI TING OFFICE

HISTORY OF OIL OR GAS WELL

It is of the greatest importance to have a complete history of the well. Please state in detail the dates of redrilling, together with the reasons for the work and its results. If there were any changes made in the casing, state fully, and if any casing was "sidetracked" or left in the well, give its size and location. If the well has been dynamited, give date, size, position, and number of shots. If plugs or bridges were put in to test for water, state kind of material used, position, and results of pumping or bailing.

Spudded 17 ½" hole at 5:00 p.m. April 1, 1958. Drilled to 178' and ran 13-3/8" OD 27.1# Armco SW SJ casing set 177' RKB. Cement with 175 sacks regular cement. Pumped plug to 150' at 10:20 a.m. 4-2-58, cement circulated. Tested casing with 500# for 30 minutes, held OK. Drilled to 1428'. Ran 8-5/8" OD 24# J-55 casing set at 1421' RKB. Cemented with 330 sacks neat regular cement, 125 sacks Diacel "D", 616# calcium chloride, 161# Flocele, 658# Tuf-Plug, followed with 100 sacks regular cement on bottom. Pumped plug to 1381. Cement did not circulate. Ran 1" pipe down outside to 220' and recemented to surface with 70 sacks regular cement. After 1 hour cement fell back approximately 30'. Recemented to surface by pouring 20 sacks around outside from surface. WOC 24 hours, tested casing with 500# for 30 minutes, held OK. Job complete 4-5-58. Drilled to 5671'. Ran 5½" OD 15.5# and 14# J-55 casing set at 5670' RKB. Cemented with 132 sacks regular cement, 100 sacks Diacel "D" and 496# calcium chloride. Pumped plug to 5638' at 1:15 p.m. 4-21-58. Tested casing with 500# for 30 minutes, held. Ran tubing, checked TD at 5637. Perforated with Welex Dyna-Jet, 4 shots per foot, 5458-86', 5492-5502', 5533-44', 5568-90', 5598-5614'. Ran 2-7/8" OD tubing set 5630' RKB, packer hanging free at 5377, collar stop at 5314. Moved out rotary rig, 4-23-58. Moved in pulling unit on 5-2-58. Displaced water with 124 barrels oil, spotted acid on formation, set packer at 5377. Dowell pumped into formation 500 gallons regular 15% acid and 8000 gallons Gal X-100. Maximum treating pressure 2400#, minimum zero. Flushed with 35 barrels oil. Average treating rate 10.6 BPM, average flush rate 7 BPM. Shut in overnight. Took 4-hour flowing test on 5-4-58. Flowed 206 barrels oil in 4 hours on 3/4" choke. Opening TP 518, final 310. Gas/oil ratio 1820. Flowing at 1236 BOPD rate.

LOCATE WELL CORRECTLY

LOG OF OIL OR GAS WELL

GEOLOGICAL SURVEY

DEPARTMENT OF THE INTERIOR

UNITED STATES

FORM 9-330

Form 9-331
(May 1963)

UNITED STATES
DEPARTMENT OF THE INTERIOR
GEOLOGICAL SURVEY

SUBMIT IN TRIPLICATE* (Other instructions on reverse side)

Form approved.
Budget Bureau No. 42-R1424.

SUNDRY NOTICES AND REPORTS ON WELLS

(Do not use this form for proposals to drill or to deepen or plug back to a different reservoir. Use "APPLICATION FOR PERMIT—" for such proposals.)

1. OIL WELL [X] GAS WELL [ ] OTHER

2. NAME OF OPERATOR: Phillips Petroleum Company

3. ADDRESS OF OPERATOR: P. O. Drawer 1150, Cortez, Colorado 81321

4. LOCATION OF WELL (Report location clearly and in accordance with any State requirements.* See also space 17 below.) At surface: 1980' FSL and 500' FWL Sec. 18 NW/4 SW/4

5. LEASE DESIGNATION AND SERIAL NO.: 14-20-603-353

6. IF INDIAN, ALLOTTEE OR TRIBE NAME: Navajo

7. UNIT AGREEMENT NAME: [illegible]-I-4192

8. FARM OR LEASE NAME: Rutherford Unit

9. WELL NO.: 18-13

10. FIELD AND POOL, OR WILDCAT: Greater Aneth Field

11. SEC., T., R., M., OR BLK. AND SURVEY OR AREA: 18-41S-24E S.L.M.

12. COUNTY OR PARISH: San Juan

13. STATE: Utah

14. PERMIT NO.:

15. ELEVATIONS (Show whether DF, RT, GR, etc.): 4694 DF

16. Check Appropriate Box To Indicate Nature of Notice, Report, or Other Data

NOTICE OF INTENTION TO:				SUBSEQUENT REPORT OF:			
TEST WATER SHUT-OFF	[ ]	PULL OR ALTER CASING	[ ]	WATER SHUT-OFF	[ ]	REPAIRING WELL	[ ]
FRACTURE TREAT	[ ]	MULTIPLE COMPLETE	[ ]	FRACTURE TREATMENT	[ ]	ALTERING CASING	[ ]
SHOOT OR ACIDIZE	[ ]	ABANDON*	[ ]	SHOOTING OR ACIDIZING	[ ]	ABANDONMENT*	[ ]
REPAIR WELL	[ ]	CHANGE PLANS	[ ]	(Other)			
(Other) Shut off water and acidize			[X]				

(NOTE: Report results of multiple completion on Well Completion or Recompletion Report and Log form.)

17. DESCRIBE PROPOSED OR COMPLETED OPERATIONS (Clearly state all pertinent details, and give pertinent dates, including estimated date of starting any proposed work. If well is directionally drilled, give subsurface locations and measured and true vertical depths for all markers and zones pertinent to this work.) *

Set retainer at 5555', test for communication between Desert Creek Subzone I perforations 5453-86, 5492-5502, 5533-44 and Desert Creek Subzone II perforations from 5584-96, 5598-5614, if no communication exists, squeeze Subzone II perforations with cement, acid treat Subzone I perforations with 5000 gallons 15% acid and return well to producing status. Contingency No. 1: If communication exists between Subzone I and II perforations, set packer at 5435' and squeeze all perforations with cement, reverse out to 5545', perforate Subzone I 5453-84, 5492-5502 and 5534-38, acid break and return well to producing status. Above proposed work to be done in attempt to shut off excess water production from Subzone II of Desert Creek Formation.

Present Production: 16 BOPD, 12 MCFGPD, 602 BWPD.

18. I hereby certify that the foregoing is true and correct

SIGNED C. K. Dolan TITLE District Superintendent DATE 4-15-66

(This space for Federal or State office use)

APPROVED BY _____ TITLE _____ DATE _____

CONDITIONS OF APPROVAL, IF ANY:

*See Instructions on Reverse Side

Form 9-331
(May 1963)

NITED STATES
DEPARTMENT OF THE INTERIOR
GEOLOGICAL SURVEY

SUBMIT IN DUPLICATE*
(Other instructions on reverse side)

Form approved.
Budget Bureau No. 42-R1424.

SUNDRY NOTICES AND REPORTS ON WELLS

(Do not use this form for proposals to drill or to deepen or plug back to a different reservoir. Use "APPLICATION FOR PERMIT—" for such proposals.)

1. OIL WELL [X] GAS WELL [ ] OTHER

2. NAME OF OPERATOR
Phillips Petroleum Company

3. ADDRESS OF OPERATOR
P. O. Drawer 1150, Cortez, Colorado 81321

4. LOCATION OF WELL (Report location clearly and in accordance with any State requirements.* See also space 17 below.)
At surface
1980' FSL and 500' FWL Sec. 18 NW/4 SW/4

5. LEASE DESIGNATION AND SERIAL NO.
14-20-603-353

6. IF INDIAN, ALLOTTEE OR TRIBE NAME
Navajo

7. UNIT AGREEMENT NAME
[illegible]

8. FARM OR LEASE NAME
Rutherford Unit

9. WELL NO.
18-13

10. FIELD AND POOL, OR WILDCAT
Greater Aneth

11. SEC., T., R., M., OR BLK. AND SURVEY OR AREA
18-41S-24E S.L.M.

12. COUNTY OR PARISH
San Juan

13. STATE
Utah

14. PERMIT NO.

15. ELEVATIONS (Show whether DF, RT, GR, etc.)
4694 DF

16. **Check Appropriate Box To Indicate Nature of Notice, Report, or Other Data**

NOTICE OF INTENTION TO:				SUBSEQUENT REPORT OF:			
TEST WATER SHUT-OFF	[ ]	PULL OR ALTER CASING	[ ]	WATER SHUT-OFF	[ ]	REPAIRING WELL	[ ]
FRACTURE TREAT	[ ]	MULTIPLE COMPLETE	[ ]	FRACTURE TREATMENT	[ ]	ALTERING CASING	[ ]
SHOOT OR ACIDIZE	[ ]	ABANDON*	[ ]	SHOOTING OR ACIDIZING	[ ]	ABANDONMENT*	[ ]
REPAIR WELL	[ ]	CHANGE PLANS	[ ]	(Other) Shut off water and acidize			[X]
(Other)			[ ]				

(NOTE: Report results of multiple completion on Well Completion or Recompletion Report and Log form.)

17. DESCRIBE PROPOSED OR COMPLETED OPERATIONS (Clearly state all pertinent details, and give pertinent dates, including estimated date of starting any proposed work. If well is directionally drilled, give subsurface locations and measured and true vertical depths for all markers and zones pertinent to this work.) *

3-22-66 through 4-12-66:
Moved in well service unit, pulled rods and tubing, reran tubing with Baker Model DC cement retainer, set at 5550'. Tested for communications, none indicated. Squeezed Subzone II perforations 5568-5590 and 5598-5614' through tubing with 195 sacks cement with .6% HALAD-9 at 2500# holding pressure. Pulled tubing. Ran retrievamatic packer on 2½" tubing. Acidized subzone I perforations with 5000 gallons 15% regular acid. Swabbed well, pulled packer, reran tubing and rods, resumed production.

Previous Production 16 BOPD, 12 MCFPD, 802 BWPD

Present Production 22 BOPD, 42 MCFPD, 0 BWPD.

18. I hereby certify that the foregoing is true and correct

SIGNED C. H. Nelson TITLE District Superintendent DATE 4-25-66

(This space for Federal or State office use)

APPROVED BY _____ TITLE _____ DATE _____
CONDITIONS OF APPROVAL, IF ANY:

*See Instructions on Reverse Side

PHILLIPS PETROLEUM COMPANY
P. O. Drawer 1150
Cortez, Colorado

April 30, 1966

In re: Ratherford Unit Monthly Operating Report - March 1966

III. SUCKER ROD FAILURES

There were 36 rod jobs required during March.

TYPE JOB	Number
Rod Breaks (Includes pin and coupling failures)	36
Rod Replacements (Includes partial string and coupling replacements performed at time of above breaks)	5

IV. WORKOVERS

41S-24E Sec 18

Ratherford Unit 18-13 (Squeeze Subzone II perforations, acidize Subzone I perforations, and Resume Production).

On March 23, 1966 pulled rods and tubing, ran cement retainer and set at 5558' between Subzone I and II perforations. Tested for communications, none indicated. Squeezed Subzone II perforations 5568-5590 and 5598-5614 through tubing with 195 sacks cement with .6% HALAD-9 at 2500# holding pressure. New PBTD 5558'. Pulled tubing, ran retrievamatic packer on tubing. Acidized Subzone I perforations 5458-86, 5492-5502 and 5533-44' with 5000 gallons 15% regular acid. Swabbed well, pulled packer, reran tubing and rods, resumed production. Production was 16 BO and 802 BWPD before the workover, and 22 BO and 0 BWPD following the workover.

Ratherford Unit 21W43 (Acid Job) 41S-24E Sec 21

On March 3, 1966 acidized well through 2½" bare tubing and packer with 2500 gallons 15% regular acid, 1000 gallons salt plug, followed with 2500 gallons 15% regular acid. Injectivity increased from 390 BWPD at 515# before the treatment to 2312 BWPD at 500# following the treatment.

(Cont'd Page 3)

Form 9-331
(May 1963)

UNITED STATES
DEPARTMENT OF THE INTERIOR
GEOLOGICAL SURVEY

SUBMIT IN TRIPLICATE
(Other instructions on reverse side)

Form approved.
Budget Bureau No. 42-R1424.

SUNDRY NOTICES AND REPORTS ON WELLS

(Do not use this form for proposals to drill or to deepen or plug back to a different reservoir. Use "APPLICATION FOR PERMIT—" for such proposals.)

5. LEASE DESIGNATION AND SERIAL NO.: 14-20-603-353

6. IF INDIAN, ALLOTTEE OR TRIBE NAME: Navajo Tribal

1. OIL WELL [X] GAS WELL [ ] OTHER

7. UNIT AGREEMENT NAME: SW-I-4192

2. NAME OF OPERATOR: Phillips Petroleum Co.

8. FARM OR LEASE NAME: Rutherford Unit

3. ADDRESS OF OPERATOR: P. O. Drawer 1150, Cortez, Colorado 81321

9. WELL NO.: 14-13

4. LOCATION OF WELL (Report location clearly and in accordance with any State requirements.* See also space 17 below.) At surface: 1980' from South Line; 500' from West Line, Sec. 18 NW/4 SW/4 Sec. 18

10. FIELD AND POOL, OR WILDCAT: Greater Aneth

11. SEC., T., R., M., OR BLK. AND SURVEY OR AREA: 18-41S-24E SLM

14. PERMIT NO.

15. ELEVATIONS (Show whether DF, RT, GR, etc.): 4694' D.F.

12. COUNTY OR PARISH: San Juan

13. STATE: Utah

16. Check Appropriate Box To Indicate Nature of Notice, Report, or Other Data

NOTICE OF INTENTION TO:				SUBSEQUENT REPORT OF:			
TEST WATER SHUT-OFF	[ ]	PULL OR ALTER CASING	[ ]	WATER SHUT-OFF	[ ]	REPAIRING WELL	[ ]
FRACTURE TREAT	[ ]	MULTIPLE COMPLETE	[ ]	FRACTURE TREATMENT	[ ]	ALTERING CASING	[ ]
SHOOT OR ACIDIZE	[X]	ABANDON*	[ ]	SHOOTING OR ACIDIZING	[ ]	ABANDONMENT*	[ ]
REPAIR WELL	[ ]	CHANGE PLANS	[ ]	(Other)			
(Other)				(NOTE: Report results of multiple completion on Well Completion or Recompletion Report and Log form.)			

17. DESCRIBE PROPOSED OR COMPLETED OPERATIONS (Clearly state all pertinent details, and give pertinent dates, including estimated date of starting any proposed work. If well is directionally drilled, give subsurface locations and measured and true vertical depths for all markers and zones pertinent to this work.) *

Pull rods and tubing, run tubing with packer and acidize Subzone I with 10,000 gallons 28% acid at fracture rate (5-6 BPM). Bomb test, pull tubing and packer and run tubing, rods and pump.

Present Production: 15 BOPD, 0 BWPD, 52 MCFGPD

18. I hereby certify that the foregoing is true and correct

SIGNED: E. H. Balas — TITLE: District Superintendent — DATE: 9-27-66

(This space for Federal or State office use)

APPROVED BY _____ TITLE _____ DATE _____

CONDITIONS OF APPROVAL, IF ANY:

*See Instructions on Reverse Side

Form 9-331
(May 1963)

UNITED STATES
DEPARTMENT OF THE INTERIOR
GEOLOGICAL SURVEY

SUBMIT IN TRIPLICATE*
(Other instructions on reverse side)

Form approved.
Budget Bureau No. 42-R1424.

SUNDRY NOTICES AND REPORTS ON WELLS

(Do not use this form for proposals to drill or to deepen or plug back to a different reservoir. Use "APPLICATION FOR PERMIT—" for such proposals.)

5. LEASE DESIGNATION AND SERIAL NO.
[redacted]

6. IF INDIAN, ALLOTTEE OR TRIBE NAME
[redacted]

1. OIL WELL [X] GAS WELL [ ] OTHER

7. UNIT AGREEMENT NAME
[redacted]

2. NAME OF OPERATOR
Phillips Petroleum Co.

8. FARM OR LEASE NAME
[redacted]

3. ADDRESS OF OPERATOR
Drawer 1150, Cortez, Colorado 81321

9. WELL NO.
[redacted]

4. LOCATION OF WELL (Report location clearly and in accordance with any State requirements.* See also space 17 below.)
At surface
1980' from South Line; 500' from West Line,
Sec. 18 NW/4 SW/4 Sec. 18

10. FIELD AND POOL, OR WILDCAT
[redacted]

11. SEC., T., R., M., OR BLK. AND SURVEY OR AREA
[redacted] SLM

14. PERMIT NO.

15. ELEVATIONS (Show whether DF, RT, GR, etc.)
4694' D.F.

12. COUNTY OR PARISH San Juan

13. STATE Utah

16. Check Appropriate Box To Indicate Nature of Notice, Report, or Other Data

NOTICE OF INTENTION TO:				SUBSEQUENT REPORT OF:			
TEST WATER SHUT-OFF	[ ]	PULL OR ALTER CASING	[ ]	WATER SHUT-OFF	[ ]	REPAIRING WELL	[ ]
FRACTURE TREAT	[ ]	MULTIPLE COMPLETE	[ ]	FRACTURE TREATMENT	[ ]	ALTERING CASING	[ ]
SHOOT OR ACIDIZE	[ ]	ABANDON*	[ ]	SHOOTING OR ACIDIZING	[X]	ABANDONMENT*	[ ]
REPAIR WELL	[ ]	CHANGE PLANS	[ ]	(Other)			[ ]
(Other)			[ ]				

(NOTE: Report results of multiple completion on Well Completion or Recompletion Report and Log form.)

17. DESCRIBE PROPOSED OR COMPLETED OPERATIONS (Clearly state all pertinent details, and give pertinent dates, including estimated date of starting any proposed work. If well is directionally drilled, give subsurface locations and measured and true vertical depths for all markers and zones pertinent to this work.)*

On October 11, 1966 moved in well service unit, pulled tubing, reran with retrievamatic packer, acidized Desert Creek Zone perforations 5430-5544' OA with 10,000 gallons 15% acid, and 500 gallons oil with 1500# moth balls in two stages. Pulled tubing with packer, reran tubing and rods, started pumping.

PREVIOUS PRODUCTION: 15 BOPD, 52 MCFGPD, 0 BWPD

PRESENT PRODUCTION: 24 BOPD, 43 MCFGPD, 1 BWPD

18. I hereby certify that the foregoing is true and correct

SIGNED C. H. Belue TITLE District Superintendent DATE 12-8-66

(This space for Federal or State office use)

APPROVED BY _____ TITLE _____ DATE _____
CONDITIONS OF APPROVAL, IF ANY:

*See Instructions on Reverse Side

STATE OF UTAH

OIL & GAS CONSERVA N COMMISSION

SUBMIT IN TRIPLICATE* (Other instructions on reverse side)

SUNDRY NOTICES AND REPORTS ON WELLS

(Do not use this form for proposals to drill or to deepen or plug back to a different reservoir. Use "APPLICATION FOR PERMIT—" for such proposals.)

1. OIL WELL [XX] GAS WELL [ ] OTHER

2. NAME OF OPERATOR: Phillips Oil Company

3. ADDRESS OF OPERATOR: P. O. Box 2920, Casper, WY 82602

4. LOCATION OF WELL (Report location clearly and in accordance with any State requirements.* See also space 17 below.) At surface: See Attached

5. LEASE DESIGNATION AND SERIAL NO.: 96-004192

6. IF INDIAN, ALLOTTEE OR TRIBE NAME: Navajo

7. UNIT AGREEMENT NAME: Ratherford Unit

8. FARM OR LEASE NAME:

9. WELL NO.:

10. FIELD AND POOL, OR WILDCAT: N/A

11. SEC., T., R., M., OR BLK. AND SURVEY OR AREA: See Attached

12. COUNTY OR PARISH: San Juan

13. STATE: Utah

14. PERMIT NO.: See Attached

15. ELEVATIONS (Show whether DF, RT, GR, etc.)

16. Check Appropriate Box To Indicate Nature of Notice, Report, or Other Data

NOTICE OF INTENTION TO:				SUBSEQUENT REPORT OF:			
TEST WATER SHUT-OFF	[ ]	PULL OR ALTER CASING	[ ]	WATER SHUT-OFF	[ ]	REPAIRING WELL	[ ]
FRACTURE TREAT	[ ]	MULTIPLE COMPLETE	[ ]	FRACTURE TREATMENT	[ ]	ALTERING CASING	[ ]
SHOOT OR ACIDIZE	[ ]	ABANDON*	[ ]	SHOOTING OR ACIDIZING	[ ]	ABANDONMENT*	[ ]
REPAIR WELL	[ ]	CHANGE PLANS	[ ]	(Other)			[ ]
(Other)			[ ]	(NOTE: Report results of multiple completion on Well Completion or Recompletion Report and Log form.)			

17. DESCRIBE PROPOSED OR COMPLETED OPERATIONS (Clearly state all pertinent details, and give pertinent dates, including estimated date of starting any proposed work. If well is directionally drilled, give subsurface locations and measured and true vertical depths for all markers and zones pertinent to this work.)*

To show change of Operator only. Phillips Oil Company assumed operations effective December 1, 1983 from Phillips Petroleum Company. See attached for list of wells.

RECEIVED DEC - 8 1983

18-13

Org. & 3-BLM
1-The Navajo Nation
1-Mary Wiley Black
1-Lawrence E. Brock
1-Cheveron USA
1-Ralph Faxel
1-Royal Hogan
1-W. O. Keller
1-Dee Kelly Corp.
1-Robert Klabzuba
1-Micheal J. Moncrief
1-Richard B. Moncrief
1-Lee W. Moncrief
1-Mary H. Morgan
1-W. A. Moncrief
1-W. A. Moncrief, Jr.
1-L. F. Peterson
1-Shell Oil Co.
1-Southland Royalty Co.
1-Superior Oil Co.
1-Leroy Shave
1-Texaco, Inc.
1-Wade Wiley, Jr.
1-Edwin W. Word, Jr.
1-File

18. I hereby certify that the foregoing is true and correct

SIGNED A. E. Stuart TITLE Area Manager DATE 12/6/83

(This space for Federal or State office use)

APPROVED BY _____ TITLE _____ DATE _____

CONDITIONS OF APPROVAL, IF ANY:

*See Instructions on Reverse Side

WELL NO.	WELL LOCATION	API NO.	STATUS
E14-12	SW NW Sec.14-T41S-R24E	43-037-15998	Act.
E14-13	NW SW Sec.14-T41S-R24E	43-037-15999	SI
10-44	SE SE Sec.10-T41S-R24E	43-037-30451	Act.
15-12	SW NW Sec.15-T41S-R24E	43-037-15715	Act.
15-14	SW SW Sec.15-T41S-R24E	43-037-15716	SI
15-22	SE NW Sec.15-T41S-R24E	43-037-30449	Act.
15-32	SW NE Sec.15-T41S-R24E	43-037-15717	Act.
15-33	NW SE Sec.15-T41S-R24E	43-037-15718	SI
15-41	NE NE Sec.15-T41S-R24E	43-037-15719	Act.
15-42	SE NE Sec.15-T41S-R24E	43-037-3-448	SI
16-12	SW NW Sec.16-T41S-R24E	43-037-15720	Act.
16-14	SW SW Sec.16-T41S-R24E	43-037-15721	Act.
16-32	SW NE Sec.16-T41S-R24E	43-037-15723	Act.
16-34	SW SE Sec.16-T41S-R24E	43-037-15724	SI
16-41	NE NE Sec.16-T41S-R24E	43-037-15725	Act.
17-12	SW NW Sec.17-T41S-R24E	43-037-15726	Act.
17-14	SW SW Sec.17-T41S-R24E	43-037-15727	Act.
17-23	NE SW Sec.17-T41S-R24E	43-037-15728	Act.
17-32	SW NE Sec.17-T41S-R24E	43-037-15729	Act.
17-34	SW SE Sec.17-T41S-R24E	43-037-15730	Act.
17-41	NE NE Sec.17-T41S-R24E	43-037-15731	Act.
17-44	SE SE Sec.17-T41S-R24E	43-037-15732	Act.
18-11	NW NW Sec.18-T41S-R24E	43-037-15733	SI
18-13	NW SW Sec.18-T41S-R24E	43-037-15734	Act.
18-14	SW SW Sec.18-T41S-R24E	43-037-15735	Act.
18-23	NE SW Sec.18-T41S-R24E	43-037-30244	Act.
18-32	SW NE Sec.18-T41S-R24E	43-037-15736	Act.
18-34	SW SE Sec.18-T41S-R24E	43-037-15737	Act.
19-12	SW NW Sec.19-T41S-R24E	43-037-15739	Act.
19-14	SW SW Sec.19-T41S-R24E	43-037-15740	SI
19-32	SW NE Sec.19-T41S-R24E	43-037-15743	Act.
19-34	SW SE Sec.19-T41S-R24E	43-037-15744	Act.
20-12	SW NW Sec.20-T41S-R24E	43-037-15746	Act.
20-14	SW SW Sec.20-T41S-R24E	43-037-15747	Act.
20-32	SW NE Sec.20-T41S-R24E	43-037-15749	Act.
20-34	SW SE Sec.20-T41S-R24E	43-037-15750	Act.
21-12	SW NW Sec.21-T41S-R24E	43-037-15752	Act.
21-14	SW SW Sec.21-T41S-R24E	43-037-15753	Act.
21-23	NE SW Sec.21-T41S-R24E	43-037-13754	Act.
21-32	SW NE Sec.21-T41S-R24E	43-037-15755	Act.
21-33	NW SE Sec.21-T41S-R24E	43-037-30447	SI
21-34	SW SE Sec.21-T41S-R24E	43-037-15756	Act.
22-12	SW NW Sec.22-T41S-R24E	43-037-15757	SI
22-14	SW SW Sec.22-T41S-R24E	43-037-15758	SI
24-42	SE NE Sec.24-T41S-R24E	43-037-15863	Act.
28-11	NW NW Sec.28-T41S-R24E	43-037-30446	Act.
28-12	SW NW Sec.28-T41S-R24E	43-037-15336	Act.
29-12	SW NW Sec.29-T41S-R24E	43-037-15337	Act.
29-32	SW NE Sec.29-T41S-R24E	43-037-15339	Act.

Form 3160-5
December 1989

UNITED STATES
DEPARTMENT OF THE INTERIOR
BUREAU OF LAND MANAGEMENT

FORM APPROVED
Budget Bureau No. 1004-0135
Expires September 30, 1990

RECEIVED
JUL 19 1990
DIVISION OF
OIL, GAS & MINING

SUNDRY NOTICES AND REPORTS ON WELLS

Do not use this form for proposals to drill or to deepen or reenter to a different reservoir.
Use "APPLICATION FOR PERMIT—" for such proposals.

SUBMIT IN TRIPLICATE

5. Lease Designation and Serial No.
14-20-603-353

6. If Indian, Allottee or Tribe Name
Navajo

7. If Unit or CA, Agreement Designation
Ratherford Unit
SW-I-4192

1. Type of Well
[X] Oil Well [ ] Gas Well [ ] Other

8. Well Name and No.
Ratherford Unit #18-13

2. Name of Operator
Phillips Petroleum Company

9. API Well No.
43-037-15734

3. Address and Telephone No.
P. O. Box 1150, Cortez, CO 81321 (303) 565-3426

10. Field and Pool, or Exploratory Area
Greater Aneth

4. Location of Well (Footage, Sec., T., R., M., or Survey Description)
1980' FSL & 500' FWL, NW NW, Sec 18-T41S-R24E

11. County or Parish, State
San Juan County, Utah

12. **CHECK APPROPRIATE BOX(s) TO INDICATE NATURE OF NOTICE, REPORT, OR OTHER DATA**

TYPE OF SUBMISSION	TYPE OF ACTION	
[ ] Notice of Intent	[ ] Abandonment	[ ] Change of Plans
[X] Subsequent Report	[ ] Recompletion	[ ] New Construction
[ ] Final Abandonment Notice	[ ] Plugging Back	[ ] Non-Routine Fracturing
	[ ] Casing Repair	[ ] Water Shut-Off
	[ ] Altering Casing	[ ] Conversion to Injection
	[X] Other Clean out well and acidize	

(Note: Report results of multiple completion on Well Completion or Recompletion Report and Log form.)

13. Describe Proposed or Completed Operations (Clearly state all pertinent details, and give pertinent dates, including estimated date of starting any proposed work. If well is directionally drilled, give subsurface locations and measured and true vertical depths for all markers and zones pertinent to this work.)*

June 19, 1990 Through June 23, 1990

MI & RU well service unit 6/19/90. COOH w/rods and pump. ND wellhead, NU BOP. COOH w/2-7/8" tbg. GIH w/bit & scraper and cleaned out well to PBTD 5558'. COOH w/bit & scraper. GIH w/5-1/2" RBP & R-3 pkr. Set RBP at 5553' and pkr at 5440'. Acidized w/4000 gal 15% HCL containing MSR 100 80/20 DAD, diverted w/250 gal 40# gelled brine with 2#/gal rock salt. Swbd back load. COOH w/pkr and RBP. GIH w/ production tbg, set TAC at 5398', SN at 5554'. ND BOP, NU wellhead, ran pump and returned well to production with a final test of 99 BOPD, 2 BWPD, 18 MCFD. Test prior to acid job - 65 BOPD, 2 BWPD, 12 MCFPD.

Distribution:

5 - BLM, Farmington	1 - P. J. Konkel	1 - PPCo, Houston
2 - Utah O&GCC	1 - Chieftain	1 - PPCo, Cortez, RC
1 - N. Anstine	1 - Mobil Oil	
1 - V. S. Shaw	1 - Texaco, Inc.	
1 - S. H. Oden	1 - Chevron	

14. I hereby certify that the foregoing is true and correct

Signed S. H. Oden S. H. Oden Title District Superintendent Date July 13, 1990

(This space for Federal or State office use)

Approved by _____ Title _____ Date _____
Conditions of approval, if any:

Title 18 U.S.C. Section 1001, makes it a crime for any person knowingly and willfully to make to any department or agency of the United States any false, fictitious or fraudulent statements or representations as to any matter within its jurisdiction.

*See Instruction on Reverse Side

2

FORM 10

STATE OF UTAH
DIVISION OF OIL, GAS AND MINING

MONTHLY OIL AND GAS PRODUCTION REPORT

RECEIVED
AUG 16 1993
DIVISION OF
OIL, GAS & MINING

OPERATOR NAME AND ADDRESS:

P J KONKEL
PHILLIPS PETROLEUM COMPANY
5525 HWY 64 NBU 3004
FARMINGTON NM 87401

UTAH ACCOUNT NUMBER: N0772

REPORT PERIOD (MONTH/YEAR): 6 / 93

AMENDED REPORT ☐ (Highlight Changes)

Well Name API Number	Entity	Location	Producing Zone	Well Status	Days Oper	Production Volumes OIL(BBL)	GAS(MCF)	WATER(BBL)
#21-23 4303713754	06280	41S 24E 21	DSCR	POW	29	1374	883	58
#3-44 4303715031	06280	41S 24E 3	DSCR	POW	30	111	94	2905
#3-14 4303715124	06280	41S 24E 3	DSCR	POW	30	67	23	302
#9-12 4303715126	06280	41S 24E 9	DSCR	POW	30	112	654	17363
#9-14 4303715127	06280	41S 24E 9	DSCR	POW	30	201	315	423
#28-12 4303715336	06280	41S 24E 28	PRDX	POW	29	112	47	2428
#29-12 4303715337	06280	41S 24E 29	PRDX	POW	29	56	0	672
#29-32 4303715339	06280	41S 24E 29	DSCR	POW	29	1402	287	2224
#29-34 4303715340	06280	41S 24E 29	DSCR	POW	29	757	48	0
#30-32 4303715342	06280	41S 24E 30	DSCR	POW	29	588	1049	3744
#3-12 4303715620	06280	41S 24E 3	DSCR	POW	30	268	11	363
#9-34 4303715711	06280	41S 24E 9	DSCR	POW	30	45	46	9800
#10-12 4303715712	06280	41S 24E 10	DSCR	POW	30	45	23	1088
				TOTALS		5138	3480	41370

USER FILES

COMMENTS: Effective July 1, 1993, Phillips Petroleum Company has sold its interest in the Ratherford Unit to Mobil Exploration and Producing U.S., Incorporated, P. O. Box 633, Midland, Texas 79702. Mobil assumed operations on July 1, 1993.

I hereby certify that this report is true and complete to the best of my knowledge. Date: 8/11/93

Name and Signature: PAT KONKEL Pat Konkel Telephone Number: 505 599-3452

(6/93)

FORM 9

STATE OF UTAH
DIVISION OF OIL, GAS AND MINING

5. LEASE DESIGNATION & SERIAL NO.

SUNDRY NOTICES AND REPORTS ON WELLS

(Do not use this form for proposals to drill or to deepen or plug back to a different reservoir. Use "APPLICATION FOR PERMIT—" for such proposals.)

6. IF INDIAN, ALLOTTEE OR TRIBE NAME: NAVAJO TRIBAL

1. OIL WELL ☐ GAS WELL ☐ OTHER

7. UNIT AGREEMENT NAME: RATHERFORD UNIT

2. NAME OF OPERATOR: MOBIL OIL CORPORATION

8. FARM OR LEASE NAME

3. ADDRESS OF OPERATOR: P. O. BOX 633 MIDLAND, TX 79702

9. WELL NO.

RECEIVED SEP 13 1993

4. LOCATION OF WELL (Report location clearly and in accordance with any State requirements. See also space 17 below.)
At surface
At proposed prod. zone

DIVISION OF OIL, GAS & MINING

10. FIELD AND POOL, OR WILDCAT: GREATER ANETH

11. SEC., T., R., M., OR BLK. AND SURVEY OR AREA

14. API NO.

15. ELEVATIONS (Show whether DF, RT, GR, etc.)

12. COUNTY: SAN JUAN

13. STATE: UTAH

16. Check Appropriate Box To Indicate Nature of Notice, Report or Other Data

NOTICE OF INTENTION TO:				SUBSEQUENT REPORT OF:			
TEST WATER SHUT-OFF	☐	PULL OR ALTER CASING	☐	WATER SHUT-OFF	☐	REPAIRING WELL	☐
FRACTURE TREAT	☐	MULTIPLE COMPLETE	☐	FRACTURE TREATMENT	☐	ALTERING CASING	☐
SHOOT OR ACIDIZE	☐	ABANDON	☐	SHOOTING OR ACIDIZING	☐	ABANDONMENT*	☐
REPAIR WELL	☐	CHANGE PLANS	☐	(Other) CHANGE OF OPERATOR			☐
(Other)				(Note: Report results of multiple completion on Well Completion or Recompletion Report and Log form.)			
APPROX. DATE WORK WILL START				DATE OF COMPLETION			

17. DESCRIBE PROPOSED OR COMPLETED OPERATIONS (Clearly state all pertinent details, and give pertinent dates, including estimated date of starting any proposed work. If well is directionally drilled, give subsurface locations and measured and true vertical depths for all markers and zones pertinent to this work.)

* Must be accompanied by a cement verification report.

AS OF JULY1, 1993, MOBIL OIL CORPORATION IS THE OPERATOR OF THE RATHERFORD UNIT. ATTACHED ARE THE INDIVIDUAL WELLS.

18. I hereby certify that the foregoing is true and correct

SIGNED Shirley Todd TITLE ENV. & REG TECHNICIAN DATE 9-8-93

(This space for Federal or State office use)

APPROVED BY _____ TITLE _____ DATE _____

CONDITIONS OF APPROVAL, IF ANY:

See Instructions On Reverse Side

(3/89)

19W-21	43-037-15741	14-20-603-353	SEC. 19, T41S, R24E	NE/NW 660' FNL 1860' FWL	
19-22	43-037-31046	14-20-603-353	SEC. 19, T41S, R24E	SE/NW 1840' FNL; 1980' FWL	
19W-23	43-037-15742	14-20-603-353	SEC. 19, T41S, R24E	NE/SW 2080' FSL; 1860' FWL	
19-31	43-037-31047	14-20-603-353	SEC. 19, T41S, R24E	NW/NE 510' FNL; 1980' FEL	
19-32	43-037-15743	14-20-603-353	SEC. 19, T41S, R24E	SW/NE 1980' FNL; 1980' FEL	
19-33	43-037-31048	14-20-603-353	SEC. 19, T41S, R24E	NW/SE 1980' FSL; 1980' FEL	
19-34	43-037-15744	14-20-603-353	SEC. 19, T41S, R24E	SW/SE 660' FSL; 1980' FEL	
19W-41	43-037-15745	14-20-603-353	SEC. 19, T41S, R24E	NE/NE 660' FNL; 660' FEL	
19-42	43-037-30916	14-20-603-353	SEC. 19, T41S, R24E	SE/NE 1880' FNL, 660' FEL	
19W-43	43-037-16420	14-20-603-353	SEC. 19, T41S, R24E	NE/SE 1980' FSL; 760' FEL	
19-44	43-037-31081	14-20-603-353	SEC. 19, T41S, R24E	SE/SE 660' FSL; 660' FEL	
19-97	43-037-31596	14-20-603-353	SEC. 19, T41S, R24E	2562' FNL, 30' FEL	
20-11	43-037-31049	14-20-603-353	SEC. 20, T41S, R24E	NW/NW 500' FNL; 660' FWL	
20-12	43-037-15746	14-20-603-353	SEC. 20, T41S, R24E	1980' FNL, 660' FWL	
20-13	43-037-30917	14-20-603-353	SEC. 20, T41S, R24E	NW/SW 2140' FSL, 500' FWL	
20-14	43-037-15747	14-20-603-353	SEC. 20, T41S, R24E	660' FSL; 660' FWL	
20W-21	43-037-16423	14-20-603-353	SEC. 20, T41S, R24E	660' FNL; 1880' FWL	
20-22	43-037-30930	14-20-603-353	SEC. 20, T41S, R24E	SE/NW 2020' FNL; 2090' FWL	
20W-23	43-037-15748	14-20-603-353	SEC. 20, T41S, R24E	NW/SW 2080; 2120' FWL	
20-24	43-037-30918	14-20-603-353	SEC. 20, T41S, R24E	SE/SW 820' FSL; 1820' FWL	
20-31	43-037-31050	14-20-603-353	SEC. 20, T41S, R24E	NW/NE 660' FNL; 1880' FEL	
20-32	43-037-15749	14-20-603-353	SEC. 20, T41S, R24E	SW/NE 1980' FNL, 1980' FEL	
20-33	43-037-30931	14-20-603-353	SEC. 20, T41S, R24E	NW/SE 1910' FSL; 2140' FEL	
20-34	43-037-15750	14-20-603-353	SEC. 20, T41S, R24E	660' FSL; 1850' FEL	
20W-41	43-037-15751	14-20-603-353	SEC. 20, T41S, R24E	NE/NE 660' FNL; 660' FEL	PA'd
20-42	43-037-31051	14-20-603-353	SEC. 20, T41S, R24E	SE/NE 1980 ' FNL; 660' FEL	
20W-43	43-037-16424	14-20-603-353	SEC. 20, T41S, R24E	2070' FSL; 810' FEL	
20-44	43-037-30915	14-20-603-353	SEC. 20, T41S, R24E	SE/SE 620' FSL; 760' FEL	
20-66	43-037-31592	14-20-603-353	SEC. 20, T41S, R24E	SW/NW 1221' FWL; 1369' FNL	
21-11	43-037-31052	14-20-603-355	SEC. 21, T41S, R24E	NW/NW 660' FNL; 660 FWL	
21-12	43-037-15752	14-20-603-355	SEC. 21, T41S, R24E	2080' FNL; 660' FWL	
21-13	43-037-30921	14-20-603-355	SEC. 21, T41S, R24E	NW/SW 2030' FSL; 515' FWL	
21-14	43-037-15753	14-20-603-355	SEC. 21, T41S, R24E	SW/SW 660' FSL; 460' FWL	
21W-21	43-037-16425	14-20-603-355	SEC. 21, T41S, R24E	NE/NW 660' FNL; 2030' FWL	
21-32	43-037-15755	14-20-603-355	SEC. 21, T41S, R24E	SW/NE 1880' FNL; 1980' FEL	
~~21-33~~	~~NA~~	~~14-20-603-355~~	~~SEC. 21, T41S, R24E~~	~~2000 FSL, 1860' FEL~~	
21-34	43-037-15756	14-20-603-355	SEC. 21, T41S, R24E	SW/SE 660' FSL; 1980' FEL	
21W-41	43-037-16426	14-20-603-355	SEC. 21, T41S, R24E	660' FNL; 810' FEL	PA'd
21W-43	43-037-16427	14-20-603-355	SEC. 21, T41S, R24E	NE/NE 1980' FSL; 660' FEL	
24-11	43-037-15861	14-20-603-247A	SEC. 24, T41S, R24E	510' FNL; 810' FWL	PA'd
24W-21	43-037-16429	14-20-603-247	SEC. 24, T41S, R24E	4695' FSL; 3300' FEL	PA'd
24W-43	43-037-16430	14-20-603-247	SEC. 24, T41S, R24E	2080' FSL; 660' FEL	
24-31W	43-037-15862	14-20-603-247A	SEC. 24, T41S, R24E	NW/NE 560' FNL; 1830' FEL	
24-32	43-037-31593	14-20-603-247A	SEC. 24, T41S, R24E	SW/NE 2121' FNL; 1846' FEL	
24-41	43-037-31132	14-20-603-247A	SEC. 24, T41S, R24E	NE/NE 660' FNL; 710' FEL	
24W-42	43-037-15863	14-20-603-247A	SEC. 24, T41S, R24E	660' FSL; 1980' FNL	
28-11	43-037-30446	14-20-603-409	SEC. 28, T41S, R24E	NW/NW 520' FNL; 620' FWL	
28-12	43-037-15336	14-20-603-409B	SEC. 28, T41S, R24E	SW/SE/NW 2121' FNL; 623' FWL	
29-11	43-037-31053	14-20-603-407	SEC. 29, T41S, R24E	NW/NW 770' FNL; 585' FWL	
29W-21	43-037-16432	14-20-603-407	SEC. 29, T41S, R24E	NE/NW 667' FNL; 2122' FWL	
29-22	43-037-31082	14-20-603-407	SEC. 29, T41S, R24E	SE/NW 2130' FNL; 1370' FWL	
29W-23	43-037-15338	14-20-603-407	SEC. 29, T41S, R24E	NE/SW 1846' FSL; 1832' FWL	
29-31	43-037-30914	14-20-603-407	SEC. 29, T41S, R24E	NW/NE 700' FNL; 2140' FEL	
29-32	43-037-15339	14-20-603-407	SEC. 29, T41S, R24E	1951' FNL; 1755' FEL	
29-33	43-037-30932	14-20-603-407	SEC. 29, T41S, R24E	NW/SE 1860' FSL; 1820' FEL	
29-34	43-037-15340	14-20-603-407	SEC. 29, T41S, R24E	817 FSL; 2096' FEL	
29W-41	43-037-16433	14-20-603-407	SEC. 29, T41S, R24E	557' FNL; 591' FEL	
29W-42	43-037-30937	14-20-603-407	SEC. 29, T41S, R24E	SE/NE 1850' FNL; 660' FEL	
29W-43	43-037-16434	14-20-603-407	SEC. 29, T41S, R24E	NE/SE 1980' FSL; 660' FEL	
30-21W	43-037-16435	14-20-603-407	SEC. 30, T41S, R24E	660' FNL; 1920' FWL	
30-32	43-037-15342	14-20-603-407	SEC. 30, T41S, R24E	SW/NE 1975' FNL; 2010' FEL	
30W-41	43-037-15343	14-20-603-407	SEC. 30, T41S, R24E	NE/NE 660' FNL; 660' FEL	
9-34	NA 43037157 11	NA 14206034043	NA Sec. 9 T. 41S, R. 24E	NA SWSE 660' FSL 1980 FEL	
12-43	43-307-31202	14-20-603-246	SEC. 12. T41S. R23E	2100' FSL;660 FEL	
12W31	43-037-15847	14-20-603-246	SEC. 12, T41S, R23E	661' FNL;, 1981' FEL	
13W24	43-037-15853	14-20-603-247	SEC. 13, T41S, R23E	SE/SW 660' FSL;3300'FEL	
15W23	43-037-16412	14-20-603-355	SEC. 15, T41S, R24E	2140' FSL;1820' FWL	
17-24	43-037-31044	14-20-603-353	SEC. 17, T41S, R24E	SE/SW 720' FSL; 1980' FWL	
18-13	43-037-15734	14-20-603-353	SEC. 18, T41S, R24E	NW/NW 1980' FSL;500' FWL	
18W32	43-037-15736	14-20-603-353	SEC. 18, T41S, R24E	SW/NE2140'FNL;1830' FEL	
20-68	43-037-31591	14-20-603-353	SEC. 20, T41S, R24E	NW/SW 1276' FWL;1615' FSL	
21-23	43-037-13754	14-20-603-355	SEC. 21, T41S, R24E	NE/SW 1740 FSL 1740 FWL	
28W21	43-037-16431	14-20-603-409	SEC.29, T41S, R24E	660' FNL; 2022' FWL	

FORM 11

STATE OF UTAH
/ISION OF OIL, GAS AND MINING

MONTHLY OIL AND GAS DISPOSITION REPORT

OPERATOR NAME AND ADDRESS:

Sheffield
~~BRIAN BERRY~~
~~M.E.P.N.A~~ MOBIL
~~POB 219031 1807A RENTWR~~ P.O. DRAWER G
DALLAS TX 75221-9031 CORTEZ, Co. 81321

UTAH ACCOUNT NUMBER: N7370

REPORT PERIOD (MONTH/YEAR): 7 / 93

AMENDED REPORT ☐ **(Highlight Changes)**

*931006 updated. fc

ENTITY NUMBER	PRODUCT	GRAVITY BTU	BEGINNING INVENTORY	VOLUME PRODUCED	DISPOSITIONS TRANSPORTED	USED ON SITE	FLARED/VENTED	OTHER	ENDING INVENTORY
05980	OIL			177609	177609	0			
	GAS			72101	66216	5885			
11174	OIL								
	GAS								
	OIL								
	GAS								
	OIL								
	GAS								
	OIL								
	GAS								
	OIL								
	GAS								
	OIL								
	GAS								
TOTALS				249710	243825	5885			

RECEIVED
SEP 13 1993
DIVISION OF
OIL, GAS & MINING

COMMENTS: PLEASE NOTE ADDRESS CHANGE. MOBIL ~~ASSU~~ PRODUCTION REPORTS WILL BE COMPILED AND SENT FROM THE CORTEZ, Co. OFFICE IN THE FUTURE.

I hereby certify that this report is true and complete to the best of my knowledge.

Date: 9/5/93

Name and Signature: Lowell B Sheffield

Telephone Number: 303 565 2212 ~~214 658 2528~~

(6/93)

FORM=NR0003.FRM 07/2

Sept 29, 1993

TO: Lisha Cordova - Utah Mining Oil & Gas

FROM: Janice Easley
BLM Farmington, NM
505 599-6355

Here is copy of Rathertford Unit Successor Operator.

4 pages including this one.

Ratherford Unit (GC)

RECEIVED
BLM
27 AM 11:44
070 FARMINGTON, NM
MINERAL RESOURCES
1
3
2
ALL SUPV.

Navajo Area Office
P. O. Box 1060
Gallup, New Mexico 87305-1060

ARES/543

JUL 2 0 1993

Mr. G. D. Cox
Mobil Exploration and
Producing North America, Inc.
P. O. Box 633
Midland, Texas 79702

Dear Mr. Cox:

Enclosed for your information and use is the approved Designation of Operator between the Phillips Petroleum Company and Mobil Exploration and Producing North America, Inc. for the Ratherford Unit.

Please note that all other concerned parties will be furnished their copy of the approved document.

Sincerely,

ACTING Area Director

Enclosure

cc: Bureau of Land Management, Farmington District Office w/enc.
TNN, Director, Minerals Department w/enc.

UNITED STATES
DEPARTMENT OF THE INTERIOR
BUREAU OF INDIAN AFFAIRS

RECEIVED
BLM
93 JUL 27 AM 11:44
070 FARMINGTON, NM

DESIGNATION OF OPERATOR

Phillips Petroleum Company is, on the records of the Bureau of Indian Affairs, operator of the Ratherford Unit,

AREA OFFICE: Window Rock, Arizona
LEASE NO: Attached hereto as Exhibit "A"

and, pursuant to the terms of the Ratherford Unit Agreement, is resigning as Unit Operator effective July 1, 1993, and hereby designates

NAME: Mobil Exploration and Producing North America Inc., duly elected pursuant to the terms of the Ratherford Unit Agreement,

ADDRESS: P. O. Box 633, Midland, Texas 79702
Attn: G. D. Cox

as Operator and local agent, with full authority to act on behalf of the Ratherford Unit lessees in complying with the terms of all leases and regulations applicable thereto and on whom the authorized officer may serve written or oral instructions in securing compliance with the Operating Regulations (43 CFR 3160 and 25 CFR 211 and 212) with respect to (described acreage to which this designation is applicable):

Attached hereto as Exhibit "A"

Bond coverage under 25 CFR 211, 212 or 225 for lease activities conducted by the above named designated operator is under Bond Number 05202782 (attach copy). Evidence of bonding is required prior to the commencement of operations.

It is understood that this designation of operator does not relieve any lessee of responsibility for compliance with the terms of the leases and the Operating Regulations. It is also understood that this designation of operator does not constitute an assignment of any interest in the leases.

In case of default on the part of the designated operator, the lessees will make full and prompt compliance with all regulations, lease terms, stipulations, or orders of the Secretary of the Interior or his representative.

Attached is the appropriate documentation relevant to this document.

The designated operator agrees to promptly notify the authorized officer of any change in the operatorship of said Ratherford Unit.

Phillips Petroleum Company

June 17, 1993 By: M. B. [illegible] J.
Attorney-in-Fact

Mobil Exploration and Producing
North America Inc.

June 11, 1993 By: B. D. Martiny
Attorney-in-Fact B.D. MARTINY

[illegible] ACTING AREA DIRECTOR 7/9/93
APPROVED BY TITLE DATE

APPROVED PURSUANT, TO SECRETARIAL REDELEGATION ORDER 209 DM 8 AND 230 DM 3.

This form does not constitute an information collection as defined by 44 U.S.C. 3502 and therefore does not require OMB approval.

EXHIBIT "A"

ATTACHED TO AND MADE A PART OF DESIGNATION OF SUCCESSOR OPERATOR, RATHERFORD UNIT

EXHIBIT "C"

Revised as of September 29, 19921

SCHEDULE OF TRACT PERCENTAGE PARTICIPATION

Tract Number	Description of Land	Serial Number and Effective Date of Lease	Tract Percentage Participation
1	S/2 Sec. 1, E/2 SE/4 Sec. 2, E/4 Sec. 11, and all of Sec. 12, T-41-S, R-23-E, S.L.M. San Juan County, Utah	14-20-603-246-A Oct. 5, 1953	11.0652565
2	SE/4 and W/2 SW/4 Sec. 5, the irregular SW/4 Sec. 6, and all of Sec. 7 and 8, T-41-S, R-24-E, San Juan County, Utah	14-20-603-368 Oct. 26, 1953	14.4159942
3	SW/4 of Sec. 4, T-41-S, R-24-E, San Juan County, Utah	14-20-603-5446 Sept. 1, 1959	.5763826
4	SE/4 Sec. 4, and NE/4 Sec. 9, T-41-S, R-24-E, San Juan County, Utah	14-20-603-4035 March 3, 1958	1.2587779
5	SW/4 of Sec. 3, T-41-S, R-24-E, S.L.M., San Juan County, Utah	14-20-603-5445 Sept. 3, 1959	.4667669
6	NW/4 of Sec. 9, T-41-S, R-24-E, S.L.M., San Juan County, Utah	14-20-603-5045 Feb. 4, 1959	1.0187043
7	NW/4, W/2 NE/4, and SW/4 Sec. 10, SE/4 Sec. 9, T-41-S, R-24-E, San Juan County, Utah	14-20-603-4043 Feb. 18, 1958	3.5097575
8	SW/4 Sec. 9, T-41-S, R-24-E, S.L.M. San Juan County, Utah	14-20-603-5046 Feb. 4, 1959	1.1141679
9	SE/4 Sec. 10 and S/2 SW/4 Sec. 11 T-41-S, R-24-E, San Juan County, Utah	14-20-603-4037 Feb. 14, 1958	2.6186804
10	All of Sec. 13, E/2 Sec. 14, and E/2 SE/4 and N/2 Sec. 24, T-41-S, R-23-E, S.L.M., San Juan County, Utah	14-20-603-247-A Oct. 5, 1953	10.3108861
11	Sections 17, 18, 19 and 20, T-41-S, R-24-E, San Juan County Utah	14-20-603-353 Oct. 27, 1953	27.3389265
12	Sections 15, 16, 21, and NW/4, and W/2 SW/4 Sec. 22, T-41-S, R-24-E, San Juan County, Utah	14-20-603-355 Oct. 27, 1953	14.2819339
13	W/2 Section 14, T-41-S, R-24-E, San Juan County, Utah	14-20-603-370 Oct. 26,1953	1.8500847
14	N/2 and SE/4, and E/2 SW/4 Sec. 29, NE/4 and E/2 SE/4 and E/2 W/2 irregular Sec. 30, and E/2 NE/4 Sec. 32, T-41-S, R-24-E, San Juan County, Utah	14-20-603-407 Dec. 10, 1953	6.9924969
15	NW/4 Sec. 28, T-41-S, R24-E San Juan County, Utah	14-20-603-409 Dec. 10, 1953	.9416393
16	SE/4 Sec. 3, T-41-S, R-24-E San Juan County, Utah	14-20-0603-6504 July 11, 1961	.5750254
17	NE/4 Sec. 3, T-41-S, R-24-E San Juan County, Utah	14-20-0603-6505 July 11, 1961	.5449292
18	NW/4 Sec. 3, T-41-S, R-24-E San Juan County, Utah	14-20-0603-6506 July 11, 1961	.5482788
19	NE/4 Sec. 4, T-41-S, R24-E San Juan County, Utah	14-20-0603-7171 June 11, 1962	.4720628
20	E/2 NW/4 Sec. 4, T-41-S, R-24-E San Juan County, Utah	14-20-0603-7172 June 11, 1962	.0992482
100% Indian Lands		TOTAL 12,909.74	100.0000000

Division of Oil, Gas and Mining

PHONE CONVERSATION DOCUMENTATION FORM

Route original/copy to:

[] Well File _____

(Location) Sec___Twp___Rng___

(API No.) _____

[] Suspense

(Return Date) _____

(To - Initials) _____

XX Other

OPERATOR CHANGE

1. Date of Phone Call: 10-6-93 Time: 9:30

2. DOGM Employee (name) L. CORDOVA (Initiated Call XX)

Talked to:

Name GLEN COX (Initiated Call [ ]) - Phone No. (915)688-2114

of (Company/Organization) MOBIL

3. Topic of Conversation: OPERATOR CHANGE FROM PHILLIPS TO MOBIL "RATHERFORD UNIT".

(NEED TO CONFIRM HOW OPERATOR WANTS THE WELLS SET UP - MEPNA AS PER BIA APPROVAL

OR MOBIL OIL CORPORATION AS PER SUNDRY DATED 9-8-93?)

4. Highlights of Conversation:

MR. COX CONFIRMED THAT THE WELLS SHOULD BE SET UNDER ACCOUNT N7370/MEPNA AS PER BIA APPROVAL, ALSO CONFIRMED THAT PRODUCTION & DISPOSITION REPORTS WILL NOW BE HANDLED OUT OF THEIR CORTEZ OFFICE RATHER THAN DALLAS.

MEPNA-

PO DRAWER G

CORTEZ, CO 81321

(303)565-2212

*ADDRESS CHANGE AFFECTS ALL WELLS CURRENTLY OPERATORED BY MEPNA, CURRENTLY REPORTED OUT OF DALLAS (MCELMO CREEK).

Division of Oil, Gas and Mining
OPERATOR CHANGE WORKSHEET

Routing:

1-VLC/LRF-SJ	
2-DTS/SJ-RJF	
3-VLC	
4-RJF	
5-LEC	
6-PL	

Attach all documentation received by the division regarding this change.
Initial each listed item when completed. Write N/A if item is not applicable.

[XX] Change of Operator (well sold)
[ ] Designation of Operator
[ ] Designation of Agent
[ ] Operator Name Change Only

The operator of the well(s) listed below has changed (EFFECTIVE DATE: 7-1-93)

TO (new operator) **M E P N A**
(address) **PO DRAWER G**
CORTEZ, CO 81321
GLEN COX (915)688-2114
phone (303) 565-2212
account no. N7370

FROM (former operator) **PHILLIPS PETROLEUM COMPANY**
(address) **5525 HWY 64 NBU 3004**
FARMINGTON, NM 87401
PAT KONKEL
phone (505) 599-3452
account no. N0772(A)

Well(s) (attach additional page if needed): ***RATHERFORD UNIT (NAVAJO)**

Name	API	Entity	Sec	Twp	Rng	Lease Type
SEE ATTACHED	43-037-15734					

OPERATOR CHANGE DOCUMENTATION

Lec 1. (Rule R615-8-10) Sundry or other legal documentation has been received from former operator (Attach to this form). (Reg. 8-20-93) (6/93 Prod. Rpt. 8-16-93)

Lec 2. (Rule R615-8-10) Sundry or other legal documentation has been received from new operator (Attach to this form). (Reg. 8-31-93) (Rec'd 9-14-93)

N/A 3. The Department of Commerce has been contacted if the new operator above is not currently operating any wells in Utah. Is company registered with the state? (yes/no) _____ If yes, show company file number: _____.

Lec 4. **(For Indian and Federal Wells ONLY)** The BLM has been contacted regarding this change (attach Telephone Documentation Form to this report). Make note of BLM status in comments section of this form. Management review of **Federal and Indian** well operator changes should take place prior to completion of steps 5 through 9 below.

Lec 5. Changes have been entered in the Oil and Gas Information System (Wang/IBM) for each well listed above. (O&G wells 10-6-93) (WIW's 10-26-93)

Lec 6. Cardex file has been updated for each well listed above. (O&G wells 10-6-93) (WIW's 10-26-93)

Lec 7. Well file labels have been updated for each well listed above. (O&G wells 10-6-93) (WIW's 10-26-93)

Lec 8. Changes have been included on the monthly "Operator, Address, and Account Changes" memo for distribution to State Lands and the Tax Commission. (10-6-93)

Lec 9. A folder has been set up for the Operator Change file, and a copy of this page has been placed there for reference during routing and processing of the original documents.

– OVER –

PERATOR CHANGE WORKSHEET (CONTINUED) Initial each item when completed. Write N/A if item is not applicable.

NTITY REVIEW

Lec 1. (Rule R615-8-7) Entity assignments have been reviewed for all wells listed above. Were entity changes made? (yes/no) ____ (If entity assignments were changed, attach copies of Form 6, Entity Action Form).

N/A 2. State Lands and the Tax Commission have been notified through normal procedures of entity changes.

OND VERIFICATION (Fee wells only)

Lec/N/A 1. (Rule R615-3-1) The new operator of any fee lease well listed above has furnished a proper bond.

__ 2. A copy of this form has been placed in the new and former operators' bond files.

__ 3. The former operator has requested a release of liability from their bond (yes/no) ___. Today's date _____ 19___. If yes, division response was made by letter dated _____ 19___.

LEASE INTEREST OWNER NOTIFICATION RESPONSIBILITY

N/A 1. (Rule R615-2-10) The former operator/lessee of any **fee lease** well listed above has been notified by letter dated _____ 19___, of their responsibility to notify any person with an interest in such lease of the change of operator. Documentation of such notification has been requested.

DCS 11-10-93

N/A 2. Copies of documents have been sent to State Lands for changes involving **State leases**.

FILMING

✓ 1. All attachments to this form have been microfilmed. Date: 11-17 19 93.

FILING

Lec 1. Copies of all attachments to this form have been filed in each well file.

Lec 2. The original of this form and the original attachments have been filed in the Operator Change file.

COMMENTS

931006 BIA/Blm Approved 7-9-93.

E71/34-35

FORM 10

STATE OF UTAH
DIVISION OF OIL, GAS AND MINING
355 West North Temple, 3 Triad, Suite 350, Salt Lake City, UT 84180-1203

MONTHLY OIL AND GAS PRODUCTION REPORT

OPERATOR NAME AND ADDRESS:

C/O MOBIL OIL CORP
M E P N A
PO DRAWER G
CORTEZ CO 81321

UTAH ACCOUNT NUMBER: N7370

REPORT PERIOD (MONTH/YEAR): 6 / 95

AMENDED REPORT ☐ **(Highlight Changes)**

Well Name / API Number	Entity	Location	Producing Zone	Well Status	Days Oper	Production Volumes OIL(BBL)	GAS(MCF)	WATER(BBL)
#18-13 4303715734	06280	41S 24E 18	PRDX					
#19-12 4303715739	06280	41S 24E 19	PRDX					
#19-14 4303715740	06280	41S 24E 19	DSCR					
RATHERFORD UNIT 19-32 (RE-ENTRY) 4303715743	06280	41S 24E 19	DSCR					
RATHERFORD UNIT 19-34 (RE-ENTRY) 4303715744	06280	41S 24E 19	DSCR					
RATHERFORD 20-12 (RE-ENTRY) 4303715746	06280	41S 24E 20	DSCR					
THERFORD UNIT 20-14 (RE-ENTRY) 4303715747	06280	41S 24E 20	DSCR					
RATHERFORD UNIT 20-32 (RE-ENTRY) 4303715749	06280	41S 24E 20	DSCR					
RATHERFORD 20-34 (RE-ENTRY) 4303715750	06280	41S 24E 20	DSCR					
#21-12 4303715752	06280	41S 24E 21	DSCR					
RATHERFORD UNIT 21-14 (RE-ENTRY) 4303715753	06280	41S 24E 21	DSCR					
#21-32 4303715755	06280	41S 24E 21	DSCR					
#21-34 4303715756	06280	41S 24E 21	DSCR					
					TOTALS			

OMMENTS:

I hereby certify that this report is true and complete to the best of my knowledge. Date:

Name and Signature: Telephone Number:

2/93)

Division of Oil, Gas and Mining

PHONE CONVERSATION DOCUMENTATION FORM

Route original/copy to:

[] Well File _____

(Location) Sec___Twp___Rng___

(API No.) _____

[] Suspense

(Return Date) _____

(To - Initials) _____

XXX Other

OPER NM CHG

1. Date of Phone Call: 8-3-95 Time: _____

2. DOGM Employee (name) L. CORDOVA (Initiated Call [])

Talked to:

Name R. J. FIRTH (Initiated Call XX) - Phone No. ( )

of (Company/Organization) _____

3. Topic of Conversation: M E P N A / N7370

4. Highlights of Conversation:

OPERATOR NAME IS BEING CHANGED FROM M E P N A (MOBIL EXPLORATION AND PRODUCING NORTH AMERICA INC) TO MOBIL EXPLOR & PROD. THE NAME CHANGE IS BEING DONE AT THIS TIME TO ALLEVIATE CONFUSION, BOTH IN HOUSE AND AMONGST THE GENERAL PUBLIC.

*SUPERIOR OIL COMPANY MERGED INTO M E P N A 4-24-86 (SEE ATTACHED).

Mobil Oil Corporation

P.O. BOX 5444
DENVER, COLORADO 80217-5444

May 14, 1986

RECEIVED
MAY 16 1986
DIVISION OF
OIL, GAS & MINING

Utah Board of Oil, Gas and Mining
355 West North Temple
3 Triad Center, Suite 350
Salt Lake City, Utah 84180-1203

Attn: R. J. Firth
Associate Director

SUPERIOR OIL COMPANY MERGER

Dear Mr. Firth:
On September 20, 1984, The Superior Oil Company (Superior) became a wholly owned subsidiary of Mobil Corporation. Since January 1, 1985, Mobil Oil Corporation (MOC), another wholly owned subsidiary of Mobil Corporation, has acted as agent for Superior and has operated the Superior-owned properties.

On April 24, 1986, Superior was merged with Mobil Exploration and Producing North America Inc. (MEPNA), which is also a wholly owned subsidiary of Mobil Corporation. MEPNA is the surviving company of the merger.

This letter is to advise you that all properties held in the name of Superior will now be held in the name of MEPNA; and that these properties will continue to be operated by MOC as agent for MEPNA.

Attached is a listing of all wells and a separate listing of injection-disposal wells, Designation of Agent and an organization chart illustrating the relationships of the various companies. If you have any questions or require additional documentation of this merger, please feel free to contact me at the above address or (303) 298-2577.

Very truly yours,

R. D. Baker
Environmental Regulatory Manager

CNE/rd
CNE8661

Division of Oil, Gas and Mining
OPERATOR CHANGE WORKSHEET

Routing:

1-LEC	7-PL
2-LWP	8-SJ
3-DTS	9-FILE
4-VLC	
5-RJF	
6-LWP	

Attach all documentation received by the division regarding this change.
Initial each listed item when completed. Write N/A if item is not applicable.

☐ Change of Operator (well sold) ☐ Designation of Agent
☐ Designation of Operator XXX Operator Name Change Only

The operator of the well(s) listed below has changed (EFFECTIVE DATE: 8-2-95)

TO (new operator) MOBIL EXPLOR & PROD
(address) C/O MOBIL OIL CORP
PO DRAWER G
CORTEZ CO 81321
phone (303) 564-5212
account no. N7370

FROM (former operator) M E P N A
(address) C/O MOBIL OIL CORP
PO DRAWER G
CORTEZ CO 81321
phone (303)564-5212
account no. N7370

Well(s) (attach additional page if needed):

Name:	API:	Entity:	Sec	Twp	Rng	Lease Type:
** SEE ATTACHED **	037-15734					

OPERATOR CHANGE DOCUMENTATION

N/A 1. (Rule R615-8-10) Sundry or other legal documentation has been received from former operator (Attach to this form).

N/A 2. (Rule R615-8-10) Sundry or other legal documentation has been received from new operator (Attach to this form).

N/A 3. The Department of Commerce has been contacted if the new operator above is not currently operating any wells in Utah. Is company registered with the state? (yes/no) _____ If yes, show company file number: _____.

N/A 4. **(For Indian and Federal Wells ONLY)** The BLM has been contacted regarding this change (attach Telephone Documentation Form to this report). Make note of BLM status in comments section of this form. Management review of **Federal and Indian** well operator changes should take place prior to completion of steps 5 through 9 below.

Lec 5. Changes have been entered in the Oil and Gas Information System (Wang/IBM) for each well listed above. (8-3-95)

LWP 6. Cardex file has been updated for each well listed above. 8-31-95

LWP 7. Well file labels have been updated for each well listed above. 9-28-95

Lec 8. Changes have been included on the monthly "Operator, Address, and Account Changes" memo for distribution to State Lands and the Tax Commission. (8-3-95)

Lec 9. A folder has been set up for the Operator Change file, and a copy of this page has been placed there for reference during routing and processing of the original documents.

OPERATOR CHANGE WORKSHEET (CONTINUED) Initial each item when completed. Write N/A if item is not applicable.

ENTITY REVIEW

Lec 1. (Rule R615-8-7) Entity assignments have been reviewed for all wells listed above. Were entity changes made? (yes/no) ____ (If entity assignments were changed, attach copies of Form 6, Entity Action Form).

N/A 2. State Lands and the Tax Commission have been notified through normal procedures of entity changes.

BOND VERIFICATION (Fee wells only) * No Fee Lease Wells at this time!

N/A/Lec 1. (Rule R615-3-1) The new operator of any fee lease well listed above has furnished a proper bond.

___ 2. A copy of this form has been placed in the new and former operators' bond files.

___ 3. The former operator has requested a release of liability from their bond (yes/no) ___. Today's date _____ 19___. If yes, division response was made by letter dated _____ 19___.

LEASE INTEREST OWNER NOTIFICATION RESPONSIBILITY

N/A 1. (Rule R615-2-10) The former operator/lessee of any **fee lease** well listed above has been notified by letter dated _____ 19___, of their responsibility to notify any person with an interest in such lease of the change of operator. Documentation of such notification has been requested.

DTS 8/5/95

N/A 2. Copies of documents have been sent to State Lands for changes involving **State leases**.

FILMING

✓ 1. All attachments to this form have been microfilmed. Date: October 6 19 95.

FILING

___ 1. Copies of all attachments to this form have been filed in each well file.

___ 2. The original of this form and the original attachments have been filed in the Operator Change file.

COMMENTS

950803 WIC F5/Not necessary!

WE71/34-35

Form 3160-5
(June 1990)

UNITED STATES
DEPARTMENT OF THE INTERIOR
BUREAU OF LAND MANAGEMENT

FORM APPROVED
Budget Bureau No. 1004-0135
Expires: March 31, 1993

SUNDRY NOTICES AND REPORTS ON WELLS

Do not use this form for proposals to drill or to deepen or reentry to a different reservoir.
Use "APPLICATION FOR PERMIT - " for such proposals

SUBMIT IN TRIPLICATE

5. Lease Designation and Serial No.: 14-20-603-353
6. If Indian, Allottee or Tribe Name: NAVAJO TRIBAL
7. If Unit or CA, Agreement Designation: RATHERFORD UNIT
8. Well Name and No.: RATHERFORD 18-13
9. API Well No.: 43-037-15734
10. Field and Pool, or exploratory Area: GREATER ANETH
11. County or Parish, State: SAN JUAN UT

1. Type of Well: [X] Oil Well [ ] Gas Well [ ] Other SIDETRACK
2. Name of Operator: Mobil Exploration & Producing U.S. Inc. as Agent for Mobil Producing TX & NM Inc.
3. Address and Telephone No.: P.O. Box 633, Midland, TX 79702 915-688-2585
4. Location of Well (Footage, Sec., T., R., M., or Survey Description): 1980' FSL & 500' FWL (NW/~~NW~~ SW) SEC.18, T41S, R24E

12. CHECK APPROPRIATE BOX(s) TO INDICATE NATURE OF NOTICE, REPORT, OR OTHER DATA

TYPE OF SUBMISSION	TYPE OF ACTION	
[X] Notice of Intent	[ ] Abandonment	[ ] Change of Plans
[ ] Subsequent Report	[ ] Recompletion	[ ] New Construction
[ ] Final Abandonment Notice	[ ] Plugging Back	[ ] Non-Routine Fracturing
	[ ] Casing Repair	[ ] Water Shut-Off
	[ ] Altering Casing	[ ] Conversion to Injection
	[X] Other SIDETRACK	[ ] Dispose Water

(Note: Report results of multiple completion on Well Completion or Recompletion Report and Log form.)

13. Describe Proposed or Completed Operations (Clearly state all pertinent details, and give pertinent dates, including estimated date of starting any proposed work. If well is directionally drilled, give subsurface locations and measured and true vertical depths for all markers and zones pertinent to this work.)*

LEG #1 BOTTOM HOLE LOCATION: 282 404
DISTANCE: 925' FROM SOUTH AND 1325' FROM THE EAST / SURFACE LOCATION, ZONE 1A
LEG #2 BOTTOM HOLE LOCATION:
DISTANCE: 1925' FROM NORTH AND 2300' FROM THE WEST / SURFACE LOCATION, ZONE 1A
586 701

SEE ATTACHMENT.

RECEIVED
JUL 08 1997
DIV. OF OIL, GAS & MINING

14. I hereby certify that the foregoing is true and correct
Signed Shirley Houchins Title ENV. & REG. TECHNICIAN Date 07-02-97

(This space for Federal or State office use)
Approved by John R. Baza Title Petroleum Engineer Date 7/15/97
Conditions of approval, if any:

Title 18 U.S.C. Section 1001, makes it a crime for any person knowingly and willfully to make to any department or agency of the United States any false, fictitious or fraudulent statements or representations as to any matter within its jurisdiction.

* See Instruction on Reverse Side

Ratherford Unit Well #18-13
Multilateral Horizontal Drilling Procedure

The objective of this procedure is to prepare this wellbore for sidetracking, sidetrack the subject well and drill multiple short radius horizontal laterals (1500-3300 ft).

1. Prepare location and dig working pit.

2. MIRU WSU, reverse unit, and H_2S equipment. Bullhead kill weight fluid down tubing.

3. Release packer, and pick up on wellhead to remove. ND wellhead and NU BOP's. Pressure test BOP's.

4. Continue to POH with tubing.

5. TIH with full gauge bit and casing scraper to PBTD. TOH with bit and scraper.

6. Ensure well will circulate, and set RTBP above perfs. **Pressure test casing to 1000 psi.**

7. RDMO WSU.

8. MIRU 24 hr WSU.

9. PU tubing, drill collars, and drill pipe in derrick and run in hole. Then POH and stand back.

10. RU wireline company and run gauge ring for casing down to packer setting depth.

11. Run packer on wireline and set using GR/CCL log to correlate with. RD wireline.

12. PU drillpipe with UBHO sub and latch assembly.

13. Latch into packer. Run gyro and obtain orientation of keyway on packer.

14. POH w/ gyro. POH w/ drill pipe and RIH w/ whipstock oriented on the surface for window azimuth desired.

15. Shear pilot mill bolt and start milling window.

16. POH and PU window mill and watermelon mill to finish window and drill 3 ft of formation.

17. POH w/ mills and RBIH w/ new mills to clean up window.

18. PU drill pipe and directional motors to drill curve. Use the gyro to drill until the inclination dictates that the gyro must be pulled.

19. Pull five stands of drill pipe and run steering tool to finish drilling the curve.

20. POH once curve is finished and PU lateral motor to drill the lateral using MWD.

21. Once lateral TD is reached, POH w/ directional equipment.

22. RIH w/ hook and retrieve whipstock.

23. PU new whipstock with extension in body for next window and orient on surface to desired azimuth.

24. Repeat steps 15-23, for each successive planned lateral.

Whipstock plan for Ratherford #18-13

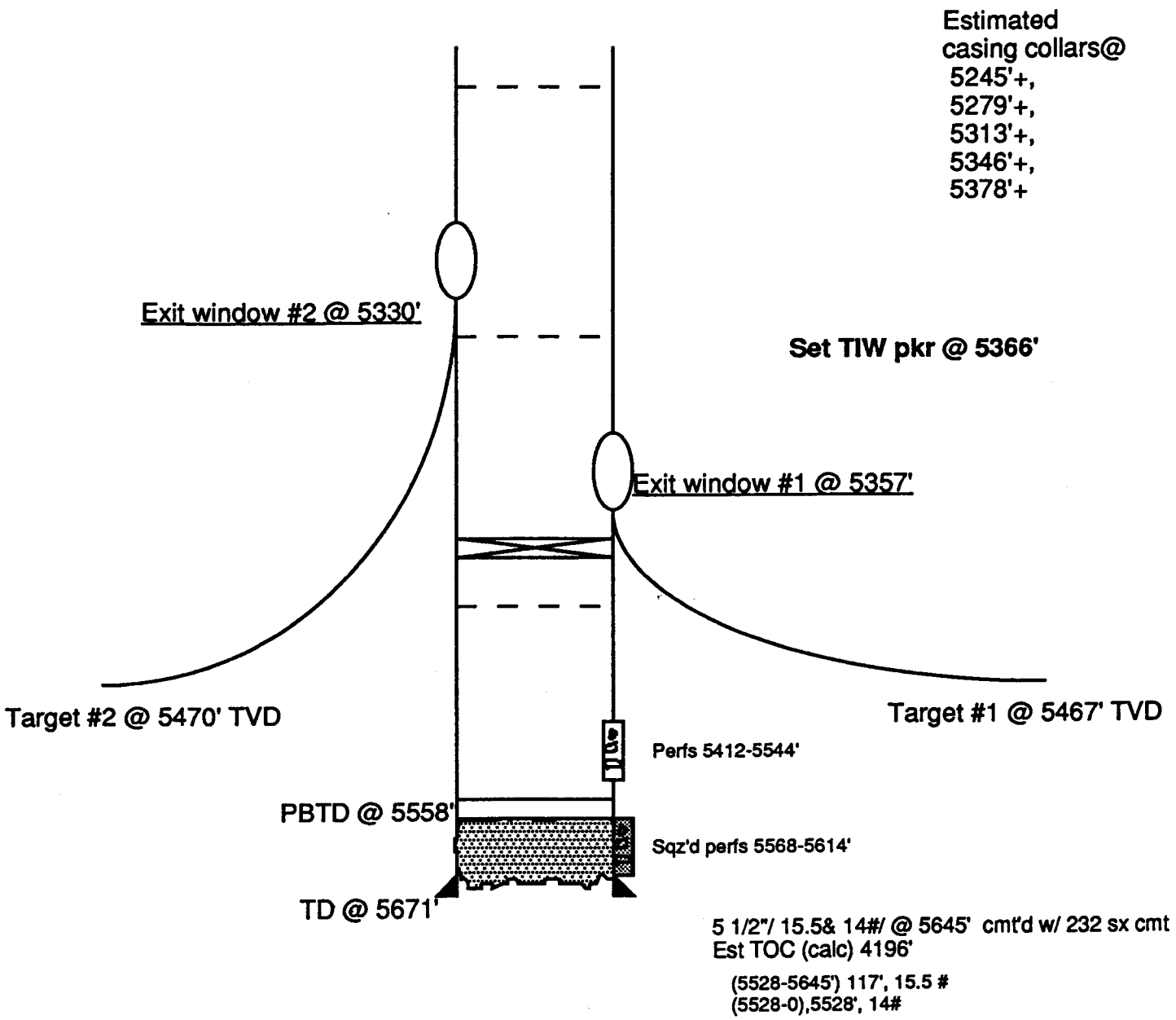

Window	Btm-Top of window	Extension length	Curve radius	Bearing	Horiz Displ
1	5357-48	-	110	125	1600
2	5330-21	27	140	310	3000

*The double spline is 2.42 ft long and the bottom of the whipstock, latch, and debris sub and shear sub are 8.68 ft long. These lengths must be added to the extension lengths to determine the entire whipstock assembly length.

Ratherford Unit #18-13
Greater Aneth Field
1980' FSL & 500' FWL
Sec 18, T41S, R24E
San Juan County, Utah

PRODUCER

API #43-037-15734
Prism ID 0043062

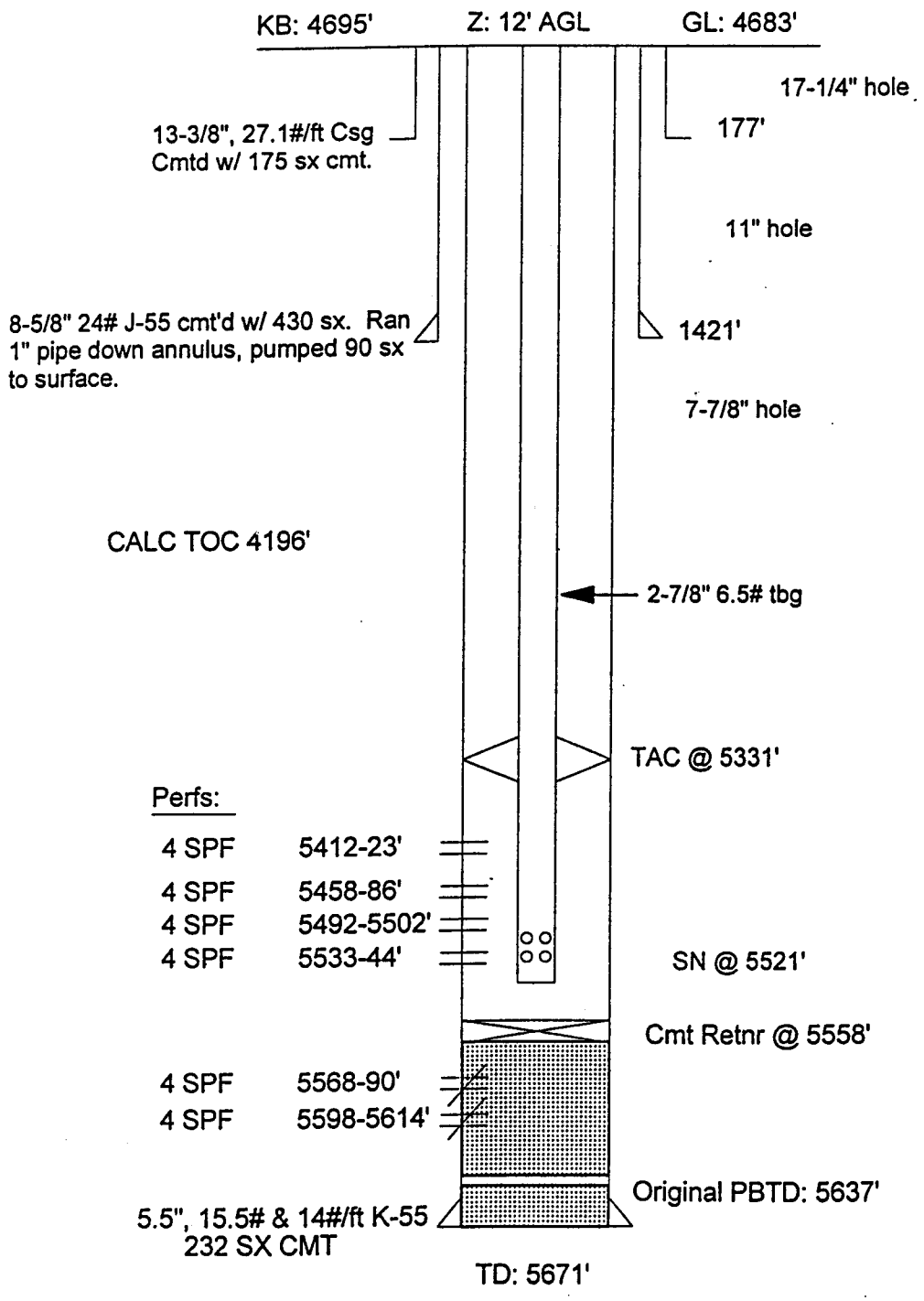

TOM COCHRANE 9-22-94

LAT 6-20-96

WORKSHEET
APPLICATION FOR PERMIT TO DRILL

APD RECEIVED: 07/08/97

API NO. ASSIGNED: 43-037-15734

WELL NAME: RATHERFORD 18-13 (MULTI-LEG)
OPERATOR: MOBIL E&P INC (N7370)

PROPOSED LOCATION:
NW~~SW~~SW 18 - T41S - R24E
SURFACE: 1980-FSL-0500-FWL
BOTTOM: 1980-FSL-1980-FEL
SAN JUAN COUNTY
GREATER ANETH FIELD (365)

LEASE TYPE: IND
LEASE NUMBER: 14-20-603-353

PROPOSED PRODUCING FORMATION: DSCR

INSPECT LOCATION BY: / /		
TECH REVIEW	Initials	Date
Engineering		
Geology		
Surface		

RECEIVED AND/OR REVIEWED:

✓ Plat
✓ Bond: Federal [✓] State [] Fee []
(Number _____)
N Potash (Y/N)
N Oil shale (Y/N)
✓ Water permit
(Number NAVAJO ALLOCATION)
N RDCC Review (Y/N)
(Date: _____)

LOCATION AND SITING:

✓ R649-2-3. Unit: RATHERFORD
___ R649-3-2. General.
___ R649-3-3. Exception.
___ Drilling Unit.
Board Cause no: _____
Date: _____

COMMENTS: _____

STIPULATIONS: 1 - Directional drilling stip.

OPERATOR: MOBIL (N7370)

FIELD: GREATER ANETH (365)

SEC, TWP, RNG: SEC. 18, T41S, R24E

COUNTY: SAN JUAN UAC: R649-2-3 RETHERFORD UNIT

PREPARED:
DATE: 9-JULY-97

State of Utah
DEPARTMENT OF NATURAL RESOURCES
DIVISION OF OIL, GAS AND MINING

Michael O. Leavitt
Governor
Ted Stewart
Executive Director
James W. Carter
Division Director

1594 West North Temple, Suite 1210
Box 145801
Salt Lake City, Utah 84114-5801
801-538-5340
801-359-3940 (Fax)
801-538-7223 (TDD)

July 15, 1997

Mobil Exploration & Producing
P.O. Box 633
Midland, Texas 79702

Re: Ratherford 18-13 Well, 1980' FSL, 500' FWL, NW SW, Sec. 18, T. 41 S., R. 24 E., San Juan County, Utah

Gentlemen:

Pursuant to the provisions and requirements of Utah Code Ann. 40-6-1 et seq., Utah Administrative Code R649-3-1 et seq., and the attached Conditions of Approval, approval to re-enter and drill the referenced well is granted.

This approval shall expire one year from the above date unless substantial and continuous operation is underway, or a request for extension is made prior to the expiration date. The API identification number assigned to this well is 43-037-15734.

Sincerely,

Lowell P. Braxton
Deputy Director

lwp
Enclosures
cc: San Juan County Assessor
Bureau of Land Management, Moab District Office

Operator: Mobil Exploration & Producing

Well Name & Number: Ratherford 18-13

API Number: 43-037-15734

Lease: 14-20-603-353

Location: NW SW **Sec.** 18 **T.** 41 S. **R.** 24 E.

Conditions of Approval

1. General
   Compliance with the requirements of Utah Admin. R. 649-1 et seq., the Oil and Gas Conservation General Rules, and the applicable terms and provisions of the approved Application for Permit to Drill.

2. Notification Requirements
   Notify the Division within 24 hours following spudding the well or commencing drilling operations. Contact Jimmie Thompson at (801)538-5336.

   Notify the Division prior to commencing operations to plug and abandon the well. Contact John R. Baza (801)538-5334 or Mike Hebertson at (801) 538-5333.

3. Reporting Requirements
   All required reports, forms and submittals shall be promptly filed with the Division, including but not limited to the Entity Action Form (Form 6), Report of Water Encountered During Drilling (Form 7), Weekly Progress Reports for drilling and completion operations, and Sundry Notices and Reports on Wells requesting approval of change of plans or other operational actions.

4. In accordance with Utah Admin. R. 649-3-11, Directional Drilling, submittal of a complete angular deviation and directional survey report is required.

DIVISION OF OIL, GAS AND MINING

SPUDDING INFORMATION

Name of Company: MOBIL EXPLORATION & PRODUCTION

Well Name: RATHERFORD UNIT 18-13

Api No. 43-037-15734

Section: 18 Township: 41S Range: 24E County: SAN JUAN

Drilling Contractor: NAVAJO

Rig # 25

SPUDDED:

Date: 8/12/97

Time: _____

How: ROTARY

Drilling will commence: _____

Reported by: SIMON

Telephone NO.: _____

Date: 8/14/97 Signed: JLT

ROCKY MOUNTAIN GEO-ENGINEERING
Well Logging • Consulting Geology • Coal Bed Methane Services • Computerized Logging Equipment & Software
ROCKY MOUNTAIN GEO-ENGINEERING CORP.
2450 INDUSTRIAL BLVD. • GRAND JUNCTION, CO 81505
(970) 243-3044 • (FAX) 241-1085

RECEIVED
SEP 15 1997
DIV. OF OIL, GAS & MINING

Tuesday, September 09, 1997

Division of Oil & Gas Mining
State of Utah
1636 W. North Temple
Salt Lake City, UT 84116

Re: Ratherford Unit #18-13 Legs 1, 2 & SideTrack
Sec. 18, T41S R24E 43 037 15734
San Juan County, Utah DRL

Dear Sirs:

Enclosed are the final computer colored logs and geology reports for the above referenced well.
FILED WITH LOGS

We appreciate the opportunity to be of service to you and look forward to working with you again in the near future.

If you have any questions regarding the enclosed data, please contact us.

Sincerely,

Bill Nagel

Bill Nagel
Senior Geologist

BN/dn

Enc. 1 Final Computer Colored Log & 1 Geology Report

cc Letter Only; Dana Larson; Mobil E & P U.S., Inc.; Midland, TX

MOBIL

RATHERFORD UNIT #18-13
SE HORIZONTAL LATERAL LEG #1
UPPER 1-A POROSITY BENCH
DESERT CREEK MEMBER
PARADOX FORMATION
SECTION 18, T41S, R24E
SAN JUAN, UTAH

RECEIVED
SEP 15 1997
DIV. OF OIL, GAS & MINING

GEOLOGY REPORT
by
DAVE MEADE / MARVIN ROANHORSE
ROCKY MOUNTAIN GEO-ENGINEERING CORP.
GRAND JUNCTION, COLORADO
(970) 243-3044

TABLE OF CONTENTS

WELL SUMMARY 3

DAILY WELL CHRONOLOGY 4

DAILY ACTIVITY 5

BIT RECORD 6

SURVEY RECORD 7

MUD RECORD 9

SAMPLE DESCRIPTIONS 10

FORMATION TOPS 17

GEOLOGIC SUMMARY AND ZONES OF INTEREST 18

WELL PLOTS 21

WELL SUMMARY

OPERATOR:	MOBIL EXPLORATION & PRODUCTION U.S. INC.
NAME:	RATHERFORD UNIT #18-13 SE HORIZONTAL LATERAL LEG #1 IN 1-A UPPER POROSITY BENCH, DESERT CREEK
LOCATION:	SECTION 18, T41S, R24E
COUNTY/STATE:	SAN JUAN, UTAH
ELEVATION:	KB:4683 GL:4695'
SPUD DATE:	08/13/97
COMPLETION DATE:	08/18/97
DRILLING ENGINEER:	SIMON BARRERA
WELLSITE GEOLOGY:	DAVE MEADE / M. ROANHORSE
MUDLOGGING ENGINEERS:	DAVE MEADE / MARK ODEGARD/MARVIN ROANHORSE
CONTRACTOR:	BIG "A" RIG 25
TOOLPUSHER:	J. DEES
HOLE SIZE:	4 3/4"
CASING RECORD:	SIDETRACK IN WINDOW AT 5357' MEASURED DEPTH
DRILLING MUD:	M-I
ENGINEER:	RON WESTENBERG/ DANNE BEASON
MUD TYPE:	FRESH WATER & BRINE WATER W/ POLYMER SWEEPS
DIRECTIONAL DRILLING CO:	SPERRY-SUN
ELECTICAL LOGGING:	NA
TOTAL DEPTH:	7060' MEASURED DEPTH; 5473.96' TRUE VERTICAL DEPTH
STATUS:	TOH & LAY DOWN TOOLS - PREPARE FOR LEG #2

DRILLING CHRONOLOGY
RATHERFORD UNIT #18-13
1-A SE HORIZONTAL LATERAL LEG#1

DATE	DEPTH	DAILY	ACTIVITY
8/13/97	5315'	7'	LAY DOWN WHIPSTOCK-P.U. STARTER MILL & NEW WHIPSTOCK-TIH-LATCH INTO PACKER & SHEAR OFF-P.U. SWIVEL & CIR-MILL 5315'-5318'-CIR BTMS UP-DISPLACE HOLE W/BRINE WATER-TOH-L.D. STARTER MILL-P.U. WINDOW MILL & WATERMELLON MILL-TOH W/MILLS-CIR-MILL 5315'-5322'-CIR OUT SWEEPS & DISPLACE W/BRINE WATER-TOH-L.D. MILL ASSEMBLY-P.U. CURVE BHA ASSEMBLY & BIT
8/14/97	5351'	7'	TIH W/ANCHOR LATCH-LATCH ANCHOR & SET-CIR-RIG UP & RUN GYRO DAT-RIG DOWN GYRO DATA-PUMP 15 BBL LCM SWEEP-PULL FROM ANCHOR-TOH-P.U. WHIPSTOCK & STARTER MILL-TIH-LATCH INTO PACKER & SHEAR OFF-MILL 5351' TO 5353'-CIR BTMS UP-TOH-L.D. STARTER MILL-P.U. WINDOW MILL & WATERMELLON MILL-TOH-MILL 5350' TO 5358'-TOH W/MILLS
8/15/97	5358'	118'	TOH W/MILLS-L.D. MILLS-P.U. CURVE BHA & BIT-ORIENT-P.U. 10 JTS PH-6 TUBING-TIH-P.U. SWIVEL & CIR-R.U. GYRO DATA & RUN IN W/GYRO-CIR-TIME DRLG @ 2 MIN./IN. 5358' TO 5360'-TIME DRLG @ 1 MIN./IN 5360'-5365'-DIR DRLG & SURVEYS TO 5396'-PULL GYRO & RIG DOWN GYRO DATA-DIR DRLG & SURVEYS
8/16/97	5476'	229'	DIR DRLG & SURVEYS-CIR SPLS & SWEEP @ 5545'-TOH & L.D. 50 JTS PIPE-L.D. CURVE ASSEMBLY & BIT-P.U. & TEST LATERAL ASSEMBLY & BIT-P.U. 50 JTS PIPE & PUMP THRU TUBING-NO PLUSE-TOH TO MWD-CLEAN & CHANGE OUT MWD-TEST MWD-TIH-CIR-DIR DLRG & SURVEYS
8/17/97	5705'	1192'	DIR DRLG & SURVEYS
8/18/97	6897'	163'	DIR DRLG & SURVEYS TO TD OF 7060'-PUMP 10 BBL SWEEP & CIR OUT SPLS & SWEEP-PUMP 10 BBLS FRESH WATER-TOH TO WINDOW-PUMP BRINE WATER-TOH-L.D. LATERAL ASSEMBLY-P.U. RETRIEVING HOOK -TIH-LATCH INTO WHIPSTOCK-TOH-L.D. HOOK ASSMEBLY-P.U. STARTER MILL & WHIPSTOCK-TIH-SET & SHEAR OFF PIN-MILL W/STARTER MILL 5324-5326-CIR BTMS UP-TOH

DAILY ACTIVITY

Operator: MOBIL
Well Name: RATHERFORD UNIT #18-13 SE 1-A HORIZONTAL LATERAL LEG#1

DATE	DEPTH	DAILY	DATE	DEPTH	DAILY
8/13/97	5350'	7'			
8/14/97	5351'	7'			
8/15/97	5358'	118'			
8/16/97	5476'	229'			
8/17/97	5705'	1192'			
8/18/97	6897'	163'			
	7060'	TD			

BIT RECORD

OPERATOR: MOBIL
WELL NAME: RATHERFORD UNIT #18-13 SE 1-A HORIZONTAL LATERAL LEG#1

RUN	SIZE	MAKE	TYPE	IN/OUT	FTG	HRS	FT/HR
#1	4 3/4"	HTC	STR-20	5358'/ 5545'	187'	18.0	10.4
#2	4 3/4"	HTC	STR-30	5545'/ 7060'	1515'	32.5	46.6

SPERRY-SUN DRILLING SERVICES
SURVEY DATA

Customer ... : Mobil (Utah)
Platform ... : RATHERFORD UNIT
Slot/Well .. : BA25/18-13, 1A1

MEASURED DEPTH	ANGLE DEG	DIRECTION DEG	TVD	NORTHINGS FEET	EASTINGS FEET	VERTICAL SECTION	DOG LEG
5300.00	1.13	140.59	5299.44	1.86 S	45.83 W	-36.48	0.00
5351.00	1.46	135.84	5350.43	2.72 S	45.06 W	-35.35	0.68
5358.00	4.80	130.24	5357.42	2.97 S	44.77 W	-34.97	47.86
5368.00	9.20	129.03	5367.34	3.74 S	43.83 W	-33.76	44.02
5378.00	14.10	128.63	5377.13	5.01 S	42.26 W	-31.74	49.01
5388.00	19.10	128.42	5386.71	6.79 S	40.02 W	-28.89	50.00
5398.00	24.20	128.30	5396.00	9.07 S	37.13 W	-25.21	51.00
5408.00	29.40	131.00	5404.92	11.96 S	33.67 W	-20.72	53.39
5418.00	34.90	130.50	5413.39	15.43 S	29.64 W	-15.43	55.06
5428.00	39.90	131.00	5421.33	19.39 S	25.04 W	-9.39	50.09
5438.00	44.20	128.80	5428.75	23.68 S	19.90 W	-2.72	45.45
5448.00	46.80	123.70	5435.76	27.89 S	14.15 W	4.41	44.70
5458.00	50.30	121.10	5442.38	31.90 S	7.82 W	11.89	40.05
5468.00	53.60	118.30	5448.55	35.80 S	0.98 W	19.73	39.68
5478.00	57.50	117.60	5454.20	39.66 S	6.31 E	27.91	39.42
5488.00	62.60	116.60	5459.19	43.61 S	14.02 E	36.49	51.73
5498.00	67.60	115.50	5463.40	47.59 S	22.16 E	45.45	50.98
5508.00	72.60	114.90	5466.81	51.59 S	30.67 E	54.71	50.32
5518.00	77.80	114.90	5469.36	55.66 S	39.44 E	64.23	52.00
5545.00	89.30	110.80	5472.39	66.05 S	64.12 E	90.40	45.18
5578.61	90.80	112.60	5472.36	78.47 S	95.34 E	123.11	6.97
5610.34	91.40	114.50	5471.75	91.15 S	124.42 E	154.20	6.28
5642.17	91.30	116.50	5471.00	104.85 S	153.14 E	185.58	6.29
5673.92	90.40	118.40	5470.53	119.48 S	181.31 E	217.05	6.62
5704.84	90.30	120.30	5470.34	134.63 S	208.26 E	247.82	6.15
5736.60	91.10	122.40	5469.95	151.16 S	235.38 E	279.51	7.08
5768.33	92.30	124.40	5469.01	168.61 S	261.86 E	311.22	7.35
5800.08	92.50	126.00	5467.68	186.90 S	287.78 E	342.94	5.07
5831.85	93.10	125.80	5466.13	205.50 S	313.48 E	374.66	1.99
5863.61	88.40	123.30	5465.71	223.51 S	339.63 E	406.41	16.76
5895.40	87.70	123.10	5466.79	240.90 S	366.22 E	438.16	2.29
5927.17	89.50	124.70	5467.57	258.62 S	392.58 E	469.92	7.58
5959.01	89.10	124.00	5467.96	276.58 S	418.86 E	501.75	2.53
5990.85	88.50	123.70	5468.63	294.31 S	445.30 E	533.58	2.11
6022.48	89.60	125.30	5469.15	312.23 S	471.36 E	565.20	6.14
6054.30	90.60	126.80	5469.10	330.95 S	497.09 E	597.01	5.67
6117.12	90.40	127.00	5468.55	368.67 S	547.32 E	659.80	0.45
6179.84	90.60	126.70	5468.00	406.28 S	597.51 E	722.48	0.57

SPERRY-SUN DRILLING SERVICES
SURVEY DATA

Customer ... : Mobil (Utah)
Platform ... : RATHERFORD UNIT
Slot/Well .. : BA25/18-13, 1A1

MEASURED DEPTH	ANGLE DEG	DIRECTION DEG	TVD	NORTHINGS FEET	EASTINGS FEET	VERTICAL SECTION	DOG LEG
6241.74	91.50	127.40	5466.87	443.57 S	646.90 E	784.33	1.84
6304.89	89.60	126.80	5466.26	481.66 S	697.26 E	847.43	3.16
6368.50	88.00	126.70	5467.59	519.71 S	748.22 E	911.00	2.52
6430.67	87.50	126.70	5470.03	556.83 S	798.03 E	973.09	0.80
6494.15	88.10	126.70	5472.47	594.74 S	848.89 E	1036.50	0.95
6556.84	89.30	125.60	5473.89	631.71 S	899.49 E	1099.16	2.60
6620.48	90.10	126.30	5474.23	669.07 S	951.01 E	1162.79	1.67
6683.92	90.00	127.40	5474.17	707.12 S	1001.77 E	1226.19	1.74
6747.28	91.00	127.90	5473.62	745.82 S	1051.94 E	1289.48	1.76
6810.76	91.20	128.10	5472.40	784.89 S	1101.95 E	1352.86	0.45
6874.36	90.30	127.20	5471.57	823.74 S	1152.30 E	1416.39	2.00
6937.85	89.60	126.30	5471.62	861.73 S	1203.17 E	1479.85	1.80
7001.62	89.10	125.30	5472.34	899.03 S	1254.89 E	1543.60	1.75
7029.00	88.20	124.90	5472.99	914.77 S	1277.28 E	1570.98	3.60
* 7060.00	88.20	124.90	5473.96	932.49 S	1302.69 E	1601.96	0.00 *

THE DOGLEG SEVERITY IS IN DEGREES PER 100.00 FEET.
N/E COORDINATE VALUES GIVEN RELATIVE TO WELL SYSTEM REFERENCE POINT.
TVD COORDINATE VALUES GIVEN RELATIVE TO WELL HEAD.
THE VERTICAL SECTION ORIGIN IS WELL HEAD.
THE VERTICAL SECTION WAS COMPUTED ALONG 125.00 (TRUE).
CALCULATION METHOD: MINIMUM CURVATURE.

* 7060 PROJECTED TO BIT: 5351 INTERPOLATED GYRO
5358-5388 INTERPOLATED AZIMUTHS
5398-5478 AZIMUTHS HAVE MAGNETIC INTERFERENCE

MUD REPORT

OPERATOR: MOBIL
WELL NAME: RATHERFORD UNIT #18-13 SE 1-A HORIZONTAL LATERAL LEG#1

DATE	DEPTH	WT	VIS	H.S	YLD	GEL	PH	WL	CK	CHL	CA	SD	OIL	WTR
8/13/97	0'	NO CHE CK	–	–	–	–	–	–	–	–	–	–	–	–
8/14/97	5352'	8.4	26	–	–	0/0	8.0	NC	NC	135000	4000	–	0%	100%
8/15/97	5361'	8.3	26	1	1	0/0	9.7	NC	NC	8600	2200	–	0%	100%
8/16/97	5545'	8.3	28	1	2	0/0	10.5	NC	NC	9600	2000	–	5%	95%
8/17/97	6057'	8.3	28	2	1	0/0	11.6	NC	NC	11000	1400	–	5%	95%
8/18/97	7060'	8.3	28	2	1	0/0	11.4	NC	NC	11000	1400	–	6%	94%

SAMPLE DESCRIPTIONS

OPERATOR: MOBIL
WELL NAME: RATHERFORD UNIT #18-13 SE 1-A HORIZONTAL LATERAL LEG #1

DEPTH	LITHOLOGY

5358.00 5370.00 "LS crm-tan,brn-dkbrn,crpxl-micxl,rthy-chk,dns,v sl anhy,occ dol,v rr mic fos,tt,NFSOC,w/scat brn-gybrn CHT frag,rr dkbrn crpxl DOL lams tt NFSOC,v rr tr CMT frag"

5370.00 5380.00 "LS tan-dkbrn,crpxl-micxl,rthy,v sl slty,occ sl dol,w/scat CHT frag AA,v sl anhy-v rr ANHY xl-poss frac fl,v shy ip,occ grdg to dkgy-blk carb SH,tt,NFSOC "

5380.00 5390.00 "LS AA,pred ltbrn,micxl,sl arg,bcmg cln ip,decr shy,v sl dol,tt-n vis POR,n-v rr bri yel FLOR,SOC,w/scat blk CHT frag"

5390.00 5400.00 "LS tan-dkbrn,mot ltbrn-dkgybrn,crpxl-micxl,pl-subpl,occ dol rr CHT frag,scat Crin fos,shy-sl mrly,occ grdg to lmy blk carb SH,pred tt-v rr frac w/calc fl,n-v rr spty yel FLOR,NSOC"

5400.00 5410.00 "LS m-dkbrn,lt-mgybrn,occ crm,AA,,occ plty,tr brn-dkbrn-dkgybrn CHT frag,v shy AA,v rr mic fos,n vis POR,v rr scat yel FLOR,NSOC"

5410.00 5420.00 "SLTST ltgy,mfrm,sl sdy,calc ip,v shy-arg,v rr mica flks,grdg to v slty lmy SH ip,w/thn LS lt-dkgy,micxl,plty ip,frm,sl dol,v slty-grdg to lmy SLTST,occ dkbrn-blk CHT,n vis POR,v sl fnt dull yel FLOR,n vis STN,n-v p slow dif CUT"

5420.00 5440.00 "SLTST AA,v arg,grdg to v slty lmy SH ip,rr fnt mnrl FLOR,w/ LS lt-dkgy,micxl,plty ip,sl dol,occ grdg to lmy SLTST,occ dkbrn-blk CHT & lt-mbrn micxl lmy sl arg DOL,n-v rr intxl POR,v sl fnt dull yel FLOR,n vis STN,n-v p slow dif CUT"

5440.00 5450.00 "LS crm-wh-tan,occ ltbrn,crpxl-micxl,cln-sl rthy,occ chk,v sl anhy,rr scat trnsl-bf CHT frag,dol ip,rr mic fos,tt-v rr intxl POR,n-v rr spty dull FLOR,n vis STN-CUT w/intbd DOL AA,lmy,tt-v rr POR,FLOR-STN-CUT AA"

5450.00 5470.00 "LS AA,v sl slty,n-v p rthy-intxl POR,NFSOC,lt-mbrn,lt-dkgybrn,crpxl-micxl sl arg v sl lmy DOL shy ip,n-v rr intxl POR,v rr fnt dull yel FLOR,n vis STN,v p slow CUT,grdg to dkgy-blk sbplty-plty calc-sl dol carb SH"

5470.00 5480.00 "SH dkbrn-blk,sbplty-plty,dol,carb,v sl calc,sooty,w/v thn arg lt-dkbrn-dkgybrn crpxl-micxl DOL & LS incl,bcmg lt-dkbrn crpxl-micxl DOL,sl slty lmy,arg ip,tt-n vis POR,v sl dull yel FLOR,n vis STN,slow ring CUT"

5480.00 5490.00 "LS wh-crm,tan-ltbrn,crpxl-micxl,rr vfxl,dol ip,sl arg-sl slty,chk ip,bcmg ooc-oom,w/rr-tr ool-intxl POR,tr spty bri yel FLOR,rr spty brn-blk STN,tr g mod fast CUT,w/tr blk carb SH & thn DOL brn-dkbrn,crpxl-micxl,Ssl arg,lmy,tt,NFSOC,v rr scat CHT frag"

5490.00 5510.00 "LS tan-brn,occ wh-crm,crpxl-vfxl,plty ip,micsuc-gran ip,bcmg ooc-oom LS GRNST,w/thn LS PKST incl-frag,dol ip-DOL rich cmt,sl anhy-v rr ANHY xl-incl,tr-g intxl-ool POR,fr-g bri yel FLOR,fr ltbrn-spty blk STN,fr-g mod fast-fast stmg mlky CUT"

5510.00 5520.00 "LS AA,POR-FLOR-STN-CUT AA"

DEPTH	LITHOLOGY

5520.00 5545.00 "LS lt-mbrn,tan,wh-crm ip,crpxl-vfxl,gran-micsuc,pred ooc-oom LS GRNST,incr dns-sl chk LS PKST,rr scat trnsl-bf CHT frag,rr ANHY xl-incl,rr mbrm crpxl DOL frag-cmt,fr intxl-ool POR,fr-g dull-bri yel FLOR,fr ltbrn-spty blk STN,fr-g mod fast-fast stmg CUT"

5545.00 5550.00 "TR SH & DOL CVGS AFTER TRIP"

5545.00 5550.00 "LS AA,v rr CHT frag-ANHY xl-incl,v sl incr sl ool LS PKST,"

5550.00 5570.00 "LS lt-dkbrn,tan,occ crm,micxl-vfxl,occ crpxl,gran-micsuc ip,pred ooc-oom LS GRNST,w/scat tt-v sl ool occ mixl LS PKST frag-incl,v rr scat CHT-ANHY AA,sl DOL cmt,n-v rr mic fos,fr-g ool-fr intxl POR,fr-g bri yel FLOR,g lt-dkbrn-rr blk STN,g mod fast CUT"

5570.00 5580.00 "LS AA,g-v g intxl-ool POR,g dull-bri yel FLOR,fr-g ltbrn STN,tr-fr blk dd o STN,g mod fast-fast stmg CUT"

5580.00 5600.00 "LS ltbrn-tan,occ crm,micxl-vfxl,rr crpxl,gran-micsuc,occ dns,pred ooc-oom LS GRNST,w/tr tt-v sl ool occ plty micxl ip LS PKST incl,v rr scat trnsl CHT-ANHY xl-incl,sl DOL cmt,g ool-intxl POR,g bri yel FLOR,g lt-dkbrn-tr blk STN,g mod fast-fast CUT"

5600.00 5610.00 "LS AA,POR-FLOR-STN-CUT AA"

5610.00 5630.00 "LS ltbrn-tan,ltgy,occ crm,micxl-vfxl,rr crpxl,gran-micsuc,occ dns,pred ooc LS GRNST,w/tr tt-v sl ool occ plty micxl ip LS PKST incl,v rr scat trnsl CHT-ANHY xl-incl,sl DOL cmt,g ool-intxl POR,g bri yel FLOR,g lt-dkbrn-tr blk STN,g mod fast-fast CUT"

5630.00 5650.00 "LS ltbrn-tan,ltgy,occ crm,micxl-vfxl,rr crpxl,gran-micsuc,occ dns,pred ooc LS GRNST,w/tr tt-v sl ool occ plty micxl ip LS PKST incl,v rr scat trnsl CHT-ANHY xl-incl,sl DOL cmt,g ool-intxl POR,g bri yel FLOR,g lt-dkbrn-tr blk STN,g mod fast-fast CUT"

5650.00 5670.00 "LS ltbrn-tan,ltgy,occ crm,micxl-vfxl,rr crpxl,gran-micsuc,occ dns,pred ooc LS GRNST,w/tr tt-v sl ool occ plty micxl ip LS PKST incl,v rr scat trnsl CHT-ANHY xl-incl,sl DOL cmt,g ool-intxl POR,g bri yel FLOR,g lt-dkbrn-tr blk STN,g mod fast-fast CUT"

5670.00 5690.00 "LS ltbrn-tan,ltgy,occ crm,micxl-vfxl,rr crpxl,gran-micsuc,occ dns,pred ooc LS GRNST,w/tr tt-v sl ool occ plty micxl ip LS PKST incl,v rr scat trnsl CHT-ANHY xl-incl,sl DOL cmt,g ool-intxl POR,g bri yel FLOR,g lt-dkbrn-tr blk STN,g mod fast-fast CUT"

5690.00 5710.00 "LS ltbrn-tan,ltgy,occ crm,micxl-vfxl,rr crpxl,gran-micsuc,occ dns,pred ooc LS GRNST,w/tr tt-v sl ool occ plty micxl ip LS PKST incl,v rr scat trnsl CHT-ANHY xl-incl,sl DOL cmt,g ool-intxl POR,g bri yel FLOR,g lt-dkbrn-tr blk STN,g mod fast-fast CUT"

5710.00 5730.00 "LS ltbrn-tan,ltgy,occ crm,micxl-vfxl,rr crpxl,gran-micsuc,occ dns,pred ooc LS GRNST,w/tr tt-v sl ool occ plty micxl ip LS PKST incl,v rr scat trnsl CHT-ANHY xl-incl,sl DOL cmt,g ool-intxl POR,g bri yel FLOR,g lt-dkbrn-tr blk STN,g mod fast-fast CUT"

5730.00 5750.00 "LS ltbrn-tan,ltgy,occ crm,micxl-vfxl,rr crpxl,gran-micsuc,occ dns,pred ooc LS GRNST,w/tr tt-v sl ool occ plty micxl ip LS PKST incl,v rr scat trnsl CHT-ANHY xl-incl,sl DOL cmt,g ool-intxl POR,g bri yel FLOR,g lt-dkbrn-tr blk STN,g mod fast-fast CUT"

DEPTH	LITHOLOGY

5749.00 5770.00 "LS ltbrn-tan,ltgy,occ crm,micxl-vfxl,rr crpxl,gran-micsuc,occ dns,pred ooc LS GRNST,w/tr tt-v sl ool occ plty micxl ip LS PKST incl,v rr scat trnsl CHT-ANHY xl-incl,sl DOL cmt,g ool-intxl POR,g bri yel FLOR,g lt-dkbrn-tr blk STN,g mod fast-fast CUT"

5770.00 5790.00 "LS ltbrn-tan,ltgy,micxl,rr crpxl,gran-micsuc,occ dns,pred ooc LS GRNST,w/tr tt-v sl ool occ plty micxl ip LS PKST incl,v rr scat trnsl CHT-ANHY xl-incl,sl DOL cmt,g ool-intxl POR,g bri yel FLOR,g lt-dkbrn-tr blk STN,g mod fast-fast CUT"

5790.00 5810.00 "LS ltbrn-tan,ltgy,micxl,rr crpxl,gran-micsuc,occ dns,pred ooc LS GRNST,w/tr tt-v sl ool occ plty micxl ip LS PKST incl,v rr scat trnsl CHT-ANHY xl-incl,sl DOL cmt,g ool-intxl POR,g bri yel FLOR,g lt-dkbrn-tr blk STN,g mod fast-fast CUT"

5810.00 5830.00 "LS ltbrn-tan,ltgy,micxl,rr crpxl,gran-micsuc,occ dns,pred ooc LS GRNST,w/tr tt-v sl ool occ plty micxl ip LS PKST incl,v rr scat trnsl CHT-ANHY xl-incl,sl DOL cmt,g ool-intxl POR,g bri yel FLOR,g lt-dkbrn-tr blk STN,g mod fast-fast CUT"

5830.00 5850.00 "LS ltbrn-tan,ltgy,micxl,rr crpxl,gran-micsuc,occ dns,pred ooc LS GRNST,w/tr tt-v sl ool occ plty micxl ip LS PKST incl,v rr scat trnsl CHT-ANHY xl-incl,sl DOL cmt,g ool-intxl POR,g bri yel FLOR,g lt-dkbrn-tr blk STN,g mod fast-fast CUT"

5850.00 5870.00 "LS ltbrn-tan,ltgy,micxl,rr crpxl,gran-micsuc,occ dns,pred ooc LS GRNST,w/tr tt-v sl ool occ plty micxl ip LS PKST incl,v rr scat trnsl CHT-ANHY xl-incl,sl DOL cmt,g ool-intxl POR,g bri yel FLOR,g lt-dkbrn-tr blk STN,g mod fast-fast CUT"

5870.00 5890.00 "LS ltbrn-tan,ltgy,occ crm,micxl,rr crpxl,gran-micsuc,occ dns,pred ooc LS GRNST,w/tr tt-v sl ool occ plty micxl ip LS PKST incl,v rr scat trnsl CHT-ANHY xl-incl,sl DOL cmt,g ool-intxl POR,g bri yel FLOR,g lt-dkbrn-tr blk STN,g mod fast-fast CUT"

5890.00 5910.00 "LS tan-ltbrn,occ crm,crpxl-vfxl,occ gran-micsuc,dns ip,pred ooc-oom GRNST,w/tr scat tt sl ool PKST,occ DOL rich cmt,rr ANHY xl-v rr incl,v rr trnsl-bf CHT frag,tt-g intxl-fr-g ool POR,g bri yel FLOR,fr-g brn-dkbrn STN,rr blk dd o STN,g mod fast-fast CUT "

5910.00 5930.00 "LS AA,pred ltbrn,occ ltgybrn,incr ool PKST,incr bf-trnsl CHT frag,v sl decr intxl POR,FLOR-STN-CUT AA"

5930.00 5950.00 "LS tan-ltbrn,rr gybrn,occ crm,crpxl-vfxl,occ gran-misuc,pred ooc-sl oom GRNST,occ scat v sl ool dns-sl plty PKST,tr DOL cmt,scat ANHY xl-v rr incl,rr scat trnsl-bf CHT frag,tr-fr intxl-g ool POR,fr-g lt-mbrn STN,v rr blk dd o STN,fr-g mod fast-fast CUT"

5950.00 5970.00 "LS AA,sl incr sl ool PKST,v rr Ost fos,decr POR,fr dull-bri yel FLOR,fr ltbrn-brn STN,v rr blk dd o STN,fr g mod fast-fast stmg CUT"

5970.00 5990.00 "LS lt-mbrn,occ dkbrn-gybrn-crm,crpxl-vfxl,gran-micsuc,rr-tr crpxl dns-plty sl ool PKST,pred ooc-oom GRNST,scat ANHY xl-incl,rr trnsl-bf CHT frag,v rr mic fos,tr-fr intxl-g ool POR,fr-g dull-bri yel FLOR,tr-g brn STN,rr blk dd o STN,fr g mod fast-fast CUT"

5990.00 6010.00 "LS pred ltbrn-tan,AA,incr PKST AA,incr intxl POR,FLOR-CUT AA,tr-fr ltbrn-v rr blk STN"

DEPTH	LITHOLOGY

6010.00 6030.00 "LS tan-ltbrn,occ crm-ltgybrn,crpxl-vfxl,gran-micsuc ip,pred ooc-oom GRNST,tr dns-sl plty occ ool PKST,scat ANHY xl-incl,scat mic fos,v rr CHT frag,fr intxl-ool POR,g bri-dull yel FLOR,tr-fr ltbrn-rr blk STN,fr-g mod fast-fast stmg CUT"

6030.00 6050.00 "LS pred tan-ltbrn,occ crm-v rr wh,AA,n-v rr CHT frag,pred ool-incr intxl POR,FLOR-STN-CUT AA"

6050.00 6070.00 "LS AA,POR-FLOR-STN-CUT AA"

6070.00 6090.00 "LS tan-ltbrn,rr crm-wh,sl ltgybrn,crpxl-vfxl,gran-micsuc,pred ooc-oom GRNST,scat rr dns-sl plty rr ool PKST,v rr mic fos,v rr CHT frag-ANHY xl,occ DOL cmt,fr-g intxl-fr ool POR,g dull-bri yel FLOR,tr-fr ltbrn-v rr blk dd o STN,fr-g mod fast-fast stmg CUT"

6090.00 6110.00 "LS AA,pred tan GRNST,occ ooc-oom,scat v sl ool-plty dns PKST-micxl ip,g intxl-fr ool POR,FLOR-STN-CUT AA"

6110.00 6130.00 "LS AA,POR-FLOR-STN-CUT AA"

6130.00 6150.00 "LS tan,occ ltbrn,rr brn-crm,crpxl-vfxl,gran-micsuc ip,pred GRNST-occ ooc-oom,scat rr-tr plty dns sl ool PKST,v rr CHT frag-ANHY xl-incl,v rr mic fos,g intxl-fr ool POR,fr-g dull-bri yel FLOR,fr ltbrn-tr dkbrn STN,rr blk dd o STN,fr-g mod fast-fast CUT"

6150.00 6160.00 "LS pred ltbrn-tan AA,POR-FLOR-STN-CUT AA"

6160.00 6180.00 "LS tan,occ ltbrn,rr brn-crm,crpxl-vfxl,gran-micsuc ip,pred GRNST-occ ooc-oom,scat rr-tr plty dns sl ool PKST,v rr CHT frag-ANHY xl-incl,v rr mic fos,g intxl-fr ool POR,fr-g dull-bri yel FLOR,fr ltbrn-tr dkbrn STN,rr blk dd o STN,fr-g mod fast-fast CUT"

6180.00 6200.00 "LS tan,ltbrn-crm ip,rr brn-wh,micxl-vfxl,gran-micsuc,pred ooc-sl oom GRNST,tr v sl ool occ plty dns LS PKST,sl DOL cmt-v rr crpxl dns DOL frag,v rr mic fos,rr CHT frag-ANHY xl,fr-g intxl-fr ool POR,g bri yel FLOR,tr-fr brn-v rr blk STN,fr-g mod fast CUT"

6200.00 6240.00 "LS tan,ltbrn-crm ip,rr brn-wh,micxl-vfxl,gran-micsuc,pred ooc-sl oom GRNST,tr v sl ool occ plty dns LS PKST,sl DOL cmt-v rr crpxl dns DOL frag,v rr mic fos,rr CHT frag-ANHY xl,fr-g intxl-fr ool POR,g bri yel FLOR,tr-fr brn-v rr blk STN,fr-g mod fast CUT"

6240.00 6260.00 "LS tan-crm,occ ltbrn,wh ip,micxl-vfxl,gran,micsuc-suc ip,ooc-sl oom GRNST,rr plty dns v sl ool PKST,v sl dol,rr ANHY xl,v rr scat trnsl CHT frag,v rr mic fos,g intxl-fr ool POR,g dull-bri yel FLOR,tr ltbrn-v rr blk dd o STN,g mod fast-fast stmg CUT"

6260.00 6280.00 "LS tan,ltbrn-crm ip,rr brn-wh,micxl-vfxl,gran-micsuc,pred ooc-sl oom GRNST,tr v sl ool occ plty dns LS PKST,sl DOL cmt-v rr crpxl dns DOL frag,v rr mic fos,rr CHT frag-ANHY xl,fr-g intxl-fr ool POR,g bri yel FLOR,tr-fr brn-v rr blk STN,fr-g mod fast CUT"

6280.00 6300.00 "LS tan-ltbrn,occ crm-brn,crpxl-vfxl,gran-micsuc,occ suc,dns ip,pred ooc-sl oom GRNST,occ dns plty ip,sl chk PKST,rr ANHY xl,n-v rr scat trnsl CHT frag,n-v rr mic fos,g intxl-fr ool POR,fr-g dull-bri yel FLOR,tr-fr ltbrn STN,n-v rr blk dd o STN,g fast CUT"

DEPTH	LITHOLOGY

6300.00 6320.00 "LS ltbrn-tan,occ brn-crm,rr wh,crpxl-vfxl,micxl-gran,pred ool-sl oom GRNST,tr dns sl dol rr plty PKST,scat trnsl-bf CHT frag,occ ANHY xl-incl,g intxl-fr ool POR,fr-g bri yel FLOR,fr-tr ltbrn-brn STN,fr-g mod fast CUT"

6320.00 6340.00 "RR BLK CARB SH CVGS NOTED"

6320.00 6340.00 "LS AA,pred ool-oom GRNST,incr ool POR,fr-g bri yel FLOR,fr-g ltbrn-brn,rr-tr blk dd o STN,fr-g mod fast-fast stmg CUT"

6340.00 6360.00 "LS ltbrn-tan,occ crm,rr brn-wh,micxl-vfxl,micxl-gran,pred ool-sl oom GRNST,tr dns sl ool rr plty PKST,occ DOL cmt,rr-tr trnsl-bf CHT frag,occ ANHY xl-incl,g intxl-fr ool POR,fr-g bri yel FLOR,fr-tr ltbrn-brn STN,fr-g mod fast CUT"

6360.00 6380.00 "LS ltbrn-tan,rr crm-wh,v rr brn,micxl-vfxl,micxl-gran,pred ool-sl oom GRNST,tr dns v sl ool rr plty PKST,occ DOL cmt,rr-tr trnsl-bf CHT frag,occ ANHY xl-incl,v rr mic fos,g intxl-ool POR,fr-g bri yel FLOR,fr-tr ltbrn-brn-rr blk STN,fr-g mod fast CUT"

6380.00 6400.00 "LS AA,incr oom,POR-FLOR-STN-CUT AA"

6400.00 6420.00 "LS ltbrn-tan,rr crm-wh,rr brn,micxl-vfxl,micxl-gran,pred ool-sl oom GRNST,tr dns v sl ool rr plty PKST,occ DOL cmt,rr-tr trnsl-bf CHT frag,occ ANHY xl-incl,v rr mic fos,g intxl-ool POR,fr-g bri yel FLOR,fr-tr ltbrn-brn-rr blk STN,fr-g mod fast CUT"

6420.00 6440.00 "LS tan-ltbrn,occ brn-crm,rr wh,crpxl-vfxl,gran-micsuc,pred ooc-oom GRNST,scat dns occ plty sl ool PKST,v rr-rr CHT frag,rr scat ANHY xl,sl DOL cmt,n-v rr mic fos,g intxl-ool POR,g dull-bri yel FLOR,fr-g ltbrn-brn-tr blk STN,g mod fast-fast stmg CUT"

6440.00 6460.00 "LS AA,incr ooc-oom GRNST,scat PKST AA,g-v g ool-fr intxl POR,FLOR-STN-CUT AA"

6460.00 6480.00 "LS ltbrn-tan,rr crm-wh,v rr brn,micxl-vfxl,micxl-gran,pred ool-sl oom GRNST,tr dns v sl ool rr plty PKST,occ DOL cmt,rr-tr trnsl CHT frag,occ ANHY xl-incl,v rr mic fos,g intxl-ool POR,fr-g bri yel FLOR,fr-tr brn STN,tr-rr blk STN,fr-g mod fast CUT"

6480.00 6500.00 "LS AA,occ gybrn,POR-FLOR-STN-CUT AA"

6500.00 6520.00 "LS ltbrn-tan,rr crm-wh,v rr brn,micxl-vfxl,micxl-gran,pred ool-sl oom GRNST,tr dns v sl ool rr plty PKST,occ DOL cmt,rr-tr trnsl-bf CHT frag,occ ANHY xl-incl,v rr mic fos,g intxl-ool POR,fr-g bri yel FLOR,fr-tr ltbrn-brn-rr blk STN,fr-g mod fast CUT"

6520.00 6540.00 "LS crm-tan-ltbrn,rr wh-brn,crpxl-vfxl,micsuc-gran,v ooc-oom GRNST,tr sl ool dns occ plty PKST,sl DOL cmt,v rr CHT frag-ANHY xl-incl,v rr mic fos,fr-g intxl-ool POR,g bri yel FLOR,fr-g ltbrn-tr brn STN,v rr blk dd o STN,g mod fast-fast CUT"

6540.00 6560.00 "LS AA,sl incr CHT frag,POR-FLOR-STN-CUT AA"

6560.00 6580.00 "LS tan-ltbrn,occ ltgybrn,crm,vfxl-crpxl,gran,ooc-sl oom GRNST/DOL rich cmt,tr scat chky plty dns PCKST frag-tr incl/rr POR fl,tr tan-bf CHT frag,g intxl-ool/tr oom POR,g even mod bri-bri FLOR,g-fr ltbrn-brn/tr scat pp blk STN,g blooming-fast strm CUT "

DEPTH	LITHOLOGY

6580.00 6600.00 "LS AA,vfxl-crpxl,gran,ooc-sl oom GRNST/DOL rich cmt,tr scat chky plty dns PCKST frag-tr incl/rr POR fl,tr tan-bf CHT frag,g intxl-ool/tr oom POR,g even mod bri-bri FLOR,g-fr ltbrn-brn/incr scat pp blk STN,g blooming-fast strm CUT "

6600.00 6620.00 "LS tan,ltbrn,occ ltgybrn,crm,vfxl-crpxl,gran,ooc-sl oom GRNST/tr DOL rich cmt,tr scat chky plty-dns PCKST frag-tr incl/incr POR fl,tr CHT AA,g intxl-ool/tr oom POR,g even mod bri-bri FLOR,g ltbrn-incr brn/incr scat pp blk STN,g blooming-fast strm CUT "

6620.00 6640.00 "LS AA,pred ooliclastic-oolmoldic GRNST/sl tr DOL cmt,tr scat dns-occ chky plty PCKST frag-prtgs,tr tan-bf CHT frag,vrr xln ANHY frag,g intxl-ooc-oom POR,g even mod bri-bri yel FLOR,g ltbrn-brn/scat pp blk dd o STN,g mod fast strm-blooming mlky CUT"

6640.00 6660.00 "LS tan-ltbrn,occ crm,brn,vfxl-crpxl-gran,pred ooc-oom GRNST/tr DOL cmt,sl incr scat dns-occ chky plty PCKST,rr CHT & ANHY AA,vrr mic fos,g ool-intxl-oom POR/tr chky fl,FLOR AA,g ltbrn-scat brn STN,tr pp blk STN,CUT AA"

6660.00 6680.00 "LS AA,vfxl-crpxl,gran,ooc-sl oom GRNST/DOL rich cmt,tr scat chky plty dns PCKST frag-tr incl/rr POR fl,tr tan-bf CHT frag,g intxl-ool/tr oom POR,g even mod bri-bri FLOR,g-fr ltbrn-brn/incr scat pp blk STN,g blooming-fast strm CUT "

6680.00 6700.00 "LS tan-ltbrn,occ crm-wh,vfxl-gran,crpxl,ooc-sl oom GRNST/DOL cmt,scat dns-tr plty chk PCKST,rr CHT frag AA,v sl anhy/vrr xln frag,g ooc-inxl-tr oom POR,g even mod bri-bri yel FLOR,g-fr ltbrn-brn STN,tr pp blk dd o STN,g slow-mod fast strm mlky CUT"

6700.00 6720.00 "LS AA,pred ooliclastic-oolmoldic GRNST/tr DOL rich cmt,sl incr scat dns-rr plty PCKST,sl anhy/rr xln frag,vrr CHT frag AA,POR-FLOR-STN-CUT AA"

6720.00 6740.00 "LS tan-ltbrn,occ crm-wh,vfxl-gran,crpxl,pred ooc-oom GRNST/DOL cmt,scat dns-tr plty chk PCKST,rr CHT frag AA,v sl anhy/vrr xln frag,g ooc-oom-intxl POR,g even mod bri-bri yel FLOR,g-fr ltbrn-brn STN,tr pp blk dd o STN,g slow-mod fast strm mlky CUT"

6740.00 6760.00 "LS tan,ltbrn,occ crm-wh,vfxl-gran,crpxl,ooc-oom GRNST,tr scat dns-rr chky plty PCKST,rr tan-bf CHT frag,sl anhy-vrr xln ANHY frag,POR-FLOR-STN-CUT AA"

6760.00 6780.00 "LS AA,oolicastic-sl incr oolmoldic GRNST/tr DOL cmt,scat dns-tr plty chk PCKST frag-incl,rr CHT frag AA,v sl anhy/vrr xln frag,g ooc-oom-intxl POR,g even mod bri-bri yel FLOR,g-fr ltbrn-brn STN,tr pp blk dd o STN,g slow-mod fast strm mlky CUT"

6780.00 6800.00 "LS AA,pred ooliclastic-oolmoldic GRNST/tr DOL rich cmt,scat dns-rr chk plty PCKST frag-incl,tr-rr tan-bf CHT frag,sl anhy/tr trnsl xl ANHY frag,g ooc-oom-intxl POR,g even mod bri-bri yel FLOR,fr-g ltbrn-brn/tr pp blk dd o STN,g mod fast-slow strm CUT"

6800.00 6820.00 "LS AA,pred ooliclastic-oolmoldic GRNST/tr DOL cmt & sl tr chky POR fl,decr dns PCKST incl-frag/rr plty frag,tr bf-tan CHT frag,v sl anhy/vrr xln ANHY frag,g ooc-oom-intxl POR,g even mod bri-bri yel FLOR,STN & CUT AA"

6820.00 6840.00 "LS AA,pred ooliclastic-oolmoldic GRNST/tr DOL rich cmt,sl incr scat dns-rr plty PCKST,sl anhy/rr xln frag,vrr CHT frag AA,POR-FLOR-STN-CUT AA"

DEPTH	LITHOLOGY

6840.00 6860.00 "LS tan-ltbrn,occ crm-wh,vfxl-gran,crpxl,ooc-sl oom GRNST/DOL cmt,scat dns-tr plty chk PCKST,rr CHT frag AA,v sl anhy/vrr xln frag,g ooc-inxl-tr oom POR,g even mod bri-bri yel FLOR,g-fr ltbrn-brn STN,tr pp blk dd o STN,g slow-mod fast strm mlky CUT"

6860.00 6880.00 "LS AA,pred ooc-oom GRNST/tr DOL cmt,scat dns-tr chky plty PCKST,sl anhy/rr xl ANHY,tr scat bf-tan CHT frag,g ooc-oom-intxl POR,g even mod bri-bri yel FLOR,g ltbrn-brn STN/sl incr blk pp dd o STN,g mod slow-fast strm mlky CUT"

6880.00 6900.00 "LS AA,pred ooliclastic-oolmoldic GRNST/tr DOL rich cmt,decr scat dns/sl incr chky plty PCKST,sl anhy,rr tan-bf CHT frag,POR-FLOR-STN-CUT AA"

6900.00 6920.00 "LS tan-ltbrn,occ crm-wh,vfxl-gran,crpxl,ooc-oom GRNST/DOL cmt,tr scat dns-plty chk PCKST,vrr CHT frag AA,v sl anhy/vrr xln frag,g ooc-oom-intxl POR,g even mod bri-bri yel FLOR,g-fr ltbrn-brn STN,tr pp blk dd o STN,g mod fast-fast strm mlky CUT"

6920.00 6940.00 "LS AA/sl incr scat dns & plty chky PCKST frag,sl anhy,rr trnsl-tan CHT frag,vrr xln ANHY frag,POR-FLOR-STN-CUT AA"

6940.00 6960.00 "LS AA,pred ooc-oom GRNST/tr DOL cmt,scat dns-sl incr chky plty PCKST,sl anhy,rr scat bf-tan CHT frag,g ooc-oom-intxl POR,g even mod bri-bri yel FLOR,g-fr ltbrn/incr brn STN,tr blk pp dd o STN,g mod slow-fast strm mlky CUT"

6960.00 6980.00 "LS tan-ltbrn,occ crm-wh,vfxl-gran,crpxl,ooc-sl oom GRNST/DOL cmt,scat dns-tr plty chk PCKST,rr CHT frag AA,v sl anhy,g ooc-inxl-oom POR,g even mod bri-bri yel FLOR,g-fr ltbrn-spty brn STN,tr pp blk dd o STN,g slow-mod fast strm mlky CUT"

6980.00 7000.00 "LS tan-ltbrn,occ spty brn,crm-wh,vfxl-gran,crpxl,ooc-oom GRNST/v sl DOL cmt,scat dns-chky plty PCKST,tr tan-bf CHT frag,sl anhy/vrr xl ANHY frag,g ooc-oom-intxl POR,g even mod bri-bri yel FLOR,g-fr ltbrn-brn/scat blk dd o STN,g mod fast-slow strm CUT"

7000.00 7020.00 "LS tan-ltbrn,occ crm,brn,wh,vfxl-gran,crpxl,pred ooliclastic-sl oolmoldic GRNST/tr ODL rich cmt,sl incr scat dns-chky plty PCKST,occ sl anhy,tr tan-bf CHT frag,g ooc-oom-intxl POR,FLOR AA,g ltbrn/incr brn STN,g scat blk dd o STN,g mod fast-fast strm CUT"

7020.00 7040.00 "LS AA,pred ooliclastic-oolmoldic GRNST/tr DOL cmt,scat dns-sl incr chky plty PCKST prtgs,sl anhy,POR & FLOR AA,g ltbrn/incr brn-spty dk brn STN,tr scat blk dd o STN,g mod fast-slow strm mlky CUT"

7040.00 7060.00 "LS tan-ltbrn,occ crm,brn,wh,vfxl-gran,crpxl,ooliclastic-oolmoldic GRNST/tr DOL rich cmt,scat dns-chky plty PCKST prtgs,occ sl anhy,rr tan-bf CHT frag,g ooc-oom-intxl POR,FLOR AA,g ltbrn-brn STN,tr scat blkpp dd o STN,g slow-mod fast strm mlky CUT"

FORMATION TOPS

OPERATOR: MOBIL
WELL NAME: RATHERFORD UNIT #18-13 SE 1-A HORIZONTAL LATERAL LEG #1

FORMATION NAME		SAMPLES MEASURED DEPTH	SAMPLES TRUE VERTICAL DEPTH	DATUM KB:4695'
LOWER ISMAY		5384'	5383'	-688'
GOTHIC SHALE		5454'	5438'	-743'
DESERT CREEK		5477'	5449'	-754'
DC 1-A ZONE		5484'	5456'	-761'

GEOLOGICAL SUMMARY

AND

ZONES OF INTEREST

The Mobil Exploration and Production U.S. Inc., Ratherford Unit #18-13 Horizontal Lateral Leg 1 was a re-entry of the Mobil Ratherford Unit #18-13 located in Section 18, T41S, R24E, and was sidetracked in a southeasterly direction from 5358' measured depth, 5358' true vertical depth, on August 15, 1997. The lateral reached a measured depth of 7060', true vertical depth of 5473.96' at total depth, with a horizontal displacement of 1601.96' and true vertical plane 124.9 degrees, on August 18, 1997, in the upper Desert Creek 1-A zone. The lateral was drilled with no problems. The curve section was completed on August 16, 1997 at a measured depth of 5545', 5472.4' true vertical depth, and the lateral section was begun in the 1-A porosity zone. This lateral used fresh water and then an oil and water emulation with polymer sweeps as the drilling fluid. A very minor amount of oil was noted while drilling the lateral through the 1-A porosity zone. The background gases noted on the accompanying mud log showed moderate to good increases while drilling the 1-A porosity in the lateral section. The samples had good oil shows through out the drilling of the lateral in the 1-A section.

The primary objectives of the Ratherford Unit #18-13 Leg 1 horizontal lateral was the upper 1-A porosity bench of the Desert Creek, to identify and define the porosity with in the bench, the effective porosity, staining and reservoir properties in 1-A zone of the Desert Creek Member of the Upper Paradox Formation. The lower 1/3 of the Upper Ismay, the entire Lower Ismay, Gothic Shale, and transition zone at the top of the Desert Creek were drilled during the curve section of the lateral. Kick off point for this lateral was 5358', measured and true vertical depth, in the lower Upper Ismay member of the Paradox Formation.

The top of the Upper Ismay was not seen during the drilling of the R.U. 18-13 reentry. The lower 1/3 of the Upper Ismay was predominately cream, light to dark brown, occasionally tan, cryptocrystalline to microcrystalline, chalky to clean, slightly argillaceous, cherty, occasionally fossiliferous limestone and rare, very thin, very marly, gray brown to dark brown, cryptocrystalline, slightly calcareous dolomite. There were very thin dark gray brown to black, carbonaceous, slightly calcareous to dolomitic shales, and scattered brown to black to translucent chert fragments noted through out the lower Upper Ismay. There was no visible porosity noted in the limestones and dolomites of the Upper Ismay, with no visible fluorescence, stain or cut, with no gas increases noted. The very dolomitic limestones at the base of the Upper Ismay graded into the very thin, carbonaceous, dolomitic shale of the Hovenweep.

The top of the Lower Ismay was picked at 5384' measured depth, 5383' true vertical depth, at the base of the very thin Hovenweep shale. The upper 1/3 of the Lower Ismay was predominately a cream to white, tan to dark brown limestone, microcrystalline to cryptocrystalline, scattered streaks of very finely crystalline, occasionally silty to sandy, some clean, very thin algal streaks, cherty with a trace of scattered anhydrite crystals. The middle, apporximate 1/3, of the Lower Ismay was dominated by a light gray to gray, slightly sandy, very argillaceous, micaceous, slightly calcareous to slightly dolomitic siltstone, with minor mineral to very faint oil show, and very poor clay filled porosity. Interbedded in this siltstone were thin tight, silty limestones and shaley, argillaceous dolomites. This siltstone has been noted in other wells in this area, in the basal Upper Ismay to Lower Ismay zones. The siltstone is the remnant of a slump feature from a higher platform to the east, during middle

Lower Ismay to early Upper Ismay time in this area. Through out the Lower Ismay were minor amounts of thin interbedded brown to dark brown, occasionally dark gray brown, cryptocrystalline to microcrystalline, earthy to slightly shaley, dense to microsucrosic dolomite and very thin black carbonaceous shale streaks. Scattered with in the limestones and dolomites were dark brown to black chert fragments and occasional anhydrite crystals and inclusions. Through out the lower 1/3 of the Lower Ismay, were very thin streaks of intercrystalline to possibly fracture porosity, with no visible fluorescence, stain or cut in the limestones and very thin interbedd dolomites. The Lower Ismay had only very minor gas increases noted, with no visible associated sample shows. The dolomitic limestones and very thin dolomites at the base of the Lower Ismay became gray brown, very argillaceous and shaley. These basal limestones and dolomites also became very marly and graded into the Gothic Shale.

The top of the Gothic Shale was at 5454' measured depth, 5438' true vertical depth. The Gothic Shale was predominantly dark gray to black, silty, carbonaceous, brittle to firm, subblocky to blocky to platy, calcareous to slightly dolomitic and slightly micaceous. Scattered with in the Gothic were very thin, cryptocrystalline to microcrystalline, earthy, limestone and dolomite partings to inclusions, with very rare scattered anhydrite crystals. The top of the Gothic was gradational from the very thin interbedding of very argillaceous, carbonaceous limestone and very argillaceous, limy dolomite, with the dolomite grading into very dolomitic, carbonaceous shale. The top of the Gothic was picked predominantly by the decrease in penetration rate and a distinct increase in the percentage of shale in the samples.

Between the Gothic Shale and Desert Creek Porosity Members is a transitional zone, which appears to be upwardly gradational. The top of the Desert Creek is commonly picked at the Gothic Shale to transition zone facies change, which in this leg occurred at a measured depth of 5477' and a true vertical depth of 5449'. In this well the zone was a silty to slightly sandy, dolomitic limestone, with very thin interbedded brown, limy, argillaceous to slightly silty dolomites and very thin carbonaceous shales. The limestones were cream to tan, some white to light brown, cryptocrystalline to microcrystalline, some very finely crystalline, argillaceous, and anhydritic, with scattered anhydrite crystals. The limestones had no visible to very rare, very poor intercrystalline porosity, with only a rare, spotty fluorescence and a very poor stain and cut. The interbedded dolomites were microcrystalline, slightly silty and had no to very rare intercrystalline porosity, with no visible sample show.

The transition zone of the Upper Desert Creek graded into the oolicastic porosity of the 1-A zone. The top of the Desert Creek 1-A porosity zone was picked at 5484' measured depth, 5456' true vertical depth. The pick was based on sample identification as well as a significant increase in the penetration rate. The top in this lateral was in a very oolicastic to slightly oolmoldic, clean, slightly anhydritic limestone grainstone, which had traces of dolomites cement and very rare scattered chert fragments. Noted in the limestone were thinly interbedded tight, cryptocrystalline, occasionally platy, anhydritic to very slightly dolomitic, slightly oolitic, tight limestone packstones near the top and scattered in varying amounts as inclusions and fragments through the lateral. The limestone was cream to tan, light brown to occasionally brown, with predominately fair to good intercrystalline to oolitic porosity, some very rare algal porosity. It appears that the 1-A porosity bench is possibly defined by the interval 5424' true vertical depth to approximately 5482' true vertical depth. The top of the porosity bench was marked by a sharp facies change as the drill rate increased rapidly. The base of the porosity zone was not encountered while landing the curve section or the lateral in this well.

At a measured depth of 5545', 5472' true vertical depth, on August 16, 1997, a trip was made to change from the curve to the lateral bottom hole assemblies, in the middle of the 1-A porosity zone. The well bore was turned upward to climb back up to the proposed target line while not leaving the good very oolicastic to slightly oolmoldic, granular porosity in the limestone of the 1-A zone. These limestones were tan to light brown to brown, microcrystalline to very finely crystalline, very oolicastic to slightly oolmoldic, with no visible amount of algal material noted. Throughout the zone there were

varying amounts of dolomite cement, translucent to buff chert fragments, cryptocrystalline oolicastic limestone packstone and anhydrite crystals to inclusions. Scattered anhydrite filled porosities were also noted. The limestones had fair to good intercrystalline to oolitic porosity, fair to good dull to bright yellow fluorescence, fair light brown to brown stain and some scattered black dead oil stain, with a fair to good moderately fast diffuse to slow to moderately fast streaming cut.

At a measured depth of 5830', true vertical depth 5466', with a horizontal displacement of 313', 1' above the target line, the well bore may have approached and brushed the top of the 1-A porosity, as the angle sharply decreased downward. There was no noticeable decrease in either porosity nor penetration rate. The well path was slow turned back upward toward the target line, from a measured depth of 6010' to approximately 6310', 5468.5' to 5466' true vertical depth, and horizontal displacements of 550' to 855'. The lithology remained the very oolicastic to slightly oolmoldic limestone grainstones, with good oolitic to intergranular porosity and good sample shows. From a measured depth of 6310', to 6620', true vertical depth of 5474', with a horizontal displacement of 1226', as the well path continued, the angle again dropped. Through out this interval several slides upward were done to slow and try to control the drop in the angle and true vertical depth. The background gases increased through out this interval, with no visible change in the oolicastic to slightly oolmoldic limestone lithology.

From a measured depth of 6620' to a total measured depth of 7060', with a true vertical depth of 5474', and a horizontal displacement of 1601' the well path paralleled the target line approximately 8' below the projected target line just above the base of the 1-A porosity bench. A slow drop in the background gas and slight decrease in the sample show and porosity were noted. Through out the lower part of the 1-A porosity zone in the last 400' of the lateral, the lithology was a tan to light brown, occasionally cream, good oolicastic to oolmoldic limestone grainstone, with slightly dolomite cement, occasional anhydrite crystals to inclusions, very rare scattered chert fragments, with a slight increase in scattered dense, slightly oolitic limestone packstone inclusions. These limestones had very good intercrystalline to oolitic porosity, fair to good dull to bright yellow fluorescence, a fair to occasionally good light brown to brown stain, with rare to fair spotty black dead oil stain, and a moderately fast diffuse to slow to moderately fast streaming milky cut. Of note was the lack of crinoid fossils noted near the base of the 1-A zone in other laterals. A slight decrease in the drill rate was noted in the last 15' of lateral at a true vertical depth of 5473.5', which may have been the base of the best porosity in the 1-A zone. At a measured depth of 7060', with a true vertical depth of 5473.96' and a horizontal displacement of 1601' the lateral was terminated on August 18, 1997. Through out the lateral the well path, even near the base of the 1-A zone, the lithology remained the light brown to tan, occasionally cream to white, oolicastic to oolmoldic, limestone grain stones, with the best porosity of the lateral extending from above to well below the proposed target line, and the well path never noticeably (except possibly the last 15') encountering the top or base of the best porosity.

In conclusion, in tracking the well bore through the 1-A bench, the oolicastic limestone grainstone porosity was very good, with the very best porosity, sample shows being consistent through out the length of the lateral. The background gases increased until the lateral dropped near the base and then the gases began decreasing. No to very subtle facies changes were noted, and were associated with the vertical changes with in the limestones, with no noticeable lateral changes in the 1-A zone. The effective or better porosity was associated with the oolicastic, to very slightly algal limestone grainstone facies, which had fair to good, intercrystalline to oolitic porosities, with very minor anhydrite plugging. The limestone packstone at the top of the 1-A zone, seen only while drilling the curve section of the lateral, had decreased porosity, poor permabilities and decreased shows. The 1-A zone throughout its length penetrated in this well has well-developed porosity and permeability and should enhance the overall effectiveness of this lateral.

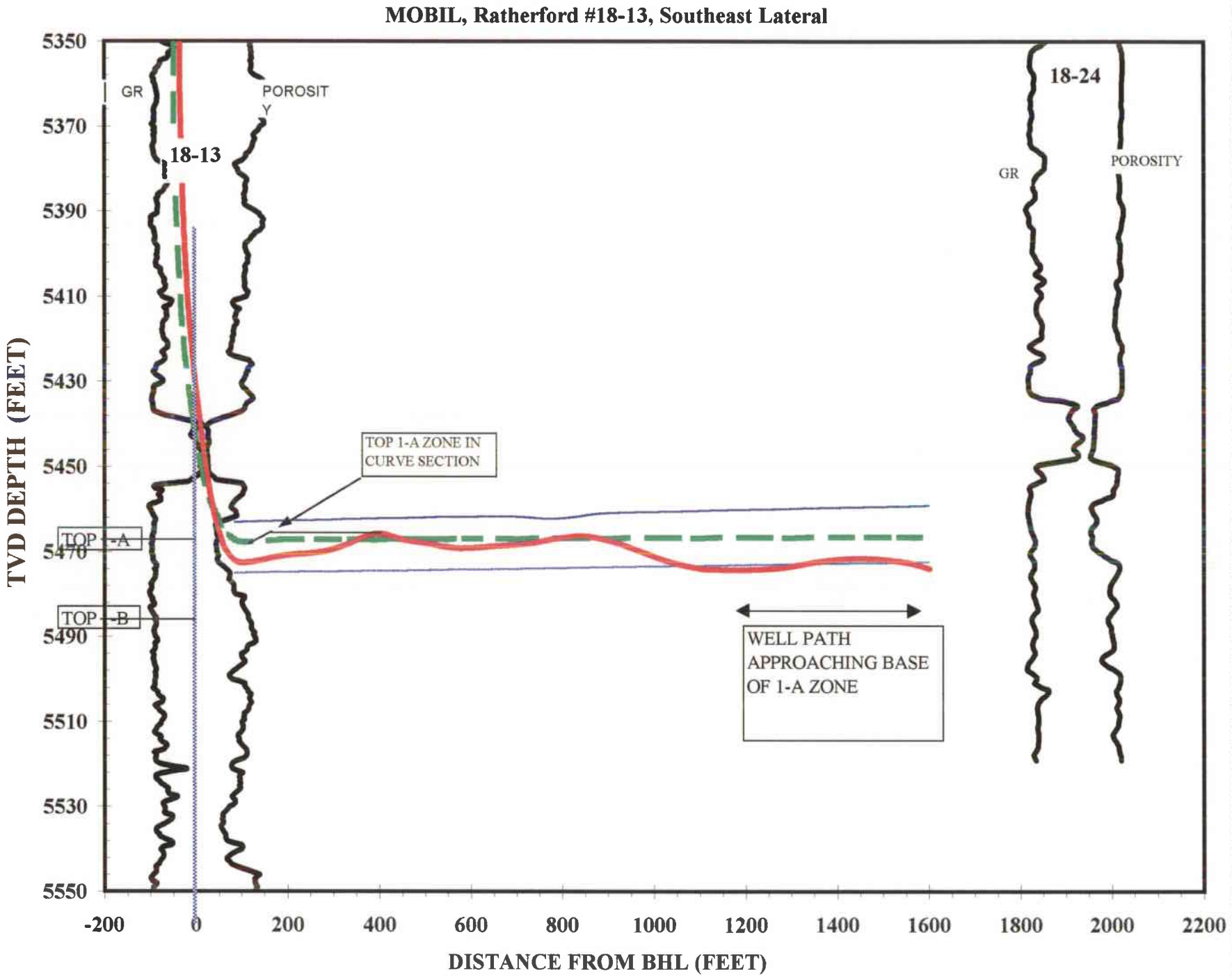
MOBIL, Ratherford #18-13, Southeast Lateral
TVD DEPTH (FEET)
DISTANCE FROM BHL (FEET)
5350
5370
5390
5410
5430
5450
5470
5490
5510
5530
5550
-200
0
200
400
600
800
1000
1200
1400
1600
1800
2000
2200
GR
POROSITY
18-13
18-24
GR
POROSITY
TOP 1-A ZONE IN CURVE SECTION
TOP 1-A
TOP 1-B
WELL PATH APPROACHING BASE OF 1-A ZONE

MOBIL

RATHERFORD UNIT #18-13
NW HORIZONTAL LATERAL LEG #2
& SIDETRACK
UPPER 1-A POROSITY BENCH
DESERT CREEK MEMBER
PARADOX FORMATION
SECTION 18, T41S, R24E
SAN JUAN, UTAH

RECEIVED
SEP 15 1997
DIV. OF OIL, GAS & MINING

GEOLOGY REPORT
by
DAVE MEADE / MARVIN ROANHORSE
ROCKY MOUNTAIN GEO-ENGINEERING CORP.
GRAND JUNCTION, COLORADO
(970) 243-3044

TABLE OF CONTENTS

WELL SUMMARY 3

DAILY WELL CHRONOLOGY 4

DAILY ACTIVITY 5

BIT RECORD 6

SURVEY RECORD 7

MUD RECORD 8

SAMPLE DESCRIPTIONS 10

FORMATION TOPS 26

GEOLOGIC SUMMARY AND ZONES OF INTEREST 27

WELL PLOTS 31

RECEIVED
SEP 15 1997
DIV. OF OIL, GAS & MINING

WELL SUMMARY

OPERATOR:	MOBIL EXPLORATION & PRODUCTION U.S. INC.
NAME:	RATHERFORD UNIT #18-13 NW HORIZONTAL LATERAL LEG #2 & SIDETRACK IN 1-A UPPER POROSITY BENCH, DESERT CREEK
LOCATION:	SECTION 18, T41S, R24E
COUNTY/STATE:	SAN JUAN, UTAH
ELEVATION:	KB:4683 GL:4695'
SPUD DATE:	08/13/97
COMPLETION DATE:	08/26/97
DRILLING ENGINEER:	SIMON BARRERA
WELLSITE GEOLOGY:	DAVE MEADE / MARVIN ROANHORSE
MUDLOGGING ENGINEERS:	DAVE MEADE / MARVIN ROANHORSE
CONTRACTOR:	BIG "A" RIG 25
TOOLPUSHER:	J. DEES
HOLE SIZE:	4 3/4"
CASING RECORD:	SIDETRACK IN WINDOW AT 5330' MEASURED DEPTH
DRILLING MUD:	M-I
ENGINEER:	RON WESTENBERG/ DANNE BEASON
MUD TYPE:	FRESH WATER & BRINE WATER W/ POLYMER SWEEPS
DIRECTIONAL DRILLING CO:	SPERRY-SUN
ELECTICAL LOGGING:	NA
TOTAL DEPTH:	8400' MEASURED DEPTH; 5483' TRUE VERTICAL DEPTH
STATUS:	TOH & LAY DOWN TOOLS - PREPARE TO MOVE RIG

DRILLING CHRONOLOGY
RATHERFORD UNIT #18-13
1-A NW HORIZONTAL LATERAL LEG#2 & SIDETRACK#1

DATE	DEPTH	DAILY	ACTIVITY
8/18/97	5324'	2'	DIR DRLG & SURVEYS TO TD OF 7060'-PUMP 10 BBL SWEEP & CIR OUT SPLS & SWEEP-PUMP 10 BBLS FRESH WATER-TOH TO WINDOW-PUMP BRINE WATER-TOH-L.D. LATERAL ASSEMBLY-P.U. RETRIEVING HOOK -TIH-LATCH INTO WHIPSTOCK-TOH-L.D. HOOK ASSMEBLY-P.U. STARTER MILL & WHIPSTOCK-TIH-SET & SHEAR OFF PIN-MILL W/STARTER MILL 5324'-5326'-CIR BTMS UP-TOH
8/19/7	5326'	38'	TOH-L.D STARTER MILL-P.U. WINDOW & WATERMELLON MILLS-TIH-MILL 5326' TO 5331'-CIR BTMS UP-TOH W/MILLS-L.D. MILLS-P.U. CURVE BHA & BIT-ORIENT & TEST-P.U. 14 JTS PH-6 TUBING-TIH-P.U. SWIVEL & CIR-R.U. GYRO DATA & RUN IN W/GYRO-CIR-TIME DRLG @ 2 MIN./IN. 5331' TO 5335'-DIR DRLG 5335'-5364'-PULL GYRO
8/20/97	5364'	209'	PULL WIRELINE & L.D. GYRO-DIR DRLG & SURVEYS TO 5573'-CIRC SPLS & SWEEP OUT-L.D. 106 JNTS AOH DRLG PIPE & POOH-L.D. CURVE ASSEMBLY(MTR,BIT & UBHD)-P.U. & M.U. NEW BIT #2,MTR & MWD,ORIENT & TEST LATERAL ASSEMBLY-RIG SERVICE-P.U. PH-6 TUBEING OFF RACKS
8/21/97	5573'	564'	P.U. 2 7/8" PH-6 TUBEING OFF RACKS-P.U.12 4 1/4" D.C. & TEST MWD W/PUMP-TIH,P.U. 4 JNTS D.P. & SWIVEL-BREAK CIR-DIR DRLG & SURVEYS TO 5819'-CIRC 1 1/2 HRS WHILE MOBIL CONDUCTS RANDOM ALCOHOL/DRUG/CONTRABAND SEARCH- DIR DRLG & SURVEYS
8/22/97	6137'	9'	DIR DRLG & SURVEYS-TD LEG#2 @ 6242'-CIR SPLS 7 SWEEP OUT-PULL BACK TO 5944'(MD) & L.D. 9 JNTS D.P.-TROUGH HOLE FROM 5926'-5946' FOR SIDETRACK #1-CIR & CREATE LEDGE-TIME DRLG @ 5 MIN/ INCH FROM 5944'-5947'-TIME DRLG @ 2.5 MIN/ INCH FROM 5947'-5950'- TIME DRLG @ 1 MIN/ INCH FROM 5950'-5953'
8/23/97	5953'	787'	TIME DRLG @ 1 MIN/ INCH FROM 5953'-5958'- DIR DRG & SURVEYS
8/24/97	6740'	331'	DIR DRG & SURVEYS-BIT STOPPED DRLG @ 6853'-CIR SPLS & SWEEP-TOOH-CHANGE OUT BIT & MUD MTR-TEST MWD-TIH-TAG BTM & CIR-DIR DRLG & SURVEYS
8/25/97	7071'	774'	DIR DRLG & SURVEYS
8/26/97	7845'	555'	DIR DRLG & SURVEYS-TD LEG #2 SIDETRACK @ 8400'-CIR SPLS & PUMP SWEEP-TOH-LAY DOWN LATERAL BHA-PREPARE WELL FOR RIG MOVE

DAILY ACTIVITY

Operator: **MOBIL**
Well Name: **RATHERFORD UNIT #18-13 NW 1-A HORIZONTAL LATERAL LEG#2 & SIDETRACK#1**

DATE	DEPTH	DAILY	DATE	DEPTH	DAILY
8/18/97	5324'	2'			
8/19/97	5326'	38'			
8/20/97	5364'	209'			
8/21/97	5573'	564'			
8/22/97	6137'	105'			
	6242'	**TD LEG#2**			
BEGIN SIDETRACK					
8/22/97	5944'	9'			
8/23/97	5953'	787'			
8/24/97	6740'	331'			
8/25/97	7071'	775'			
8/26/97	7846'	554'			
8/27/97	8400'	**TD**			

BIT RECORD

OPERATOR: MOBIL
WELL NAME: RATHERFORD UNIT #18-13 NW 1-A HORIZONTAL LATERAL LEG#2 & SIDETRACK#1

RUN	SIZE	MAKE	TYPE	IN/OUT	FTG	HRS	FT/HR
#1 (RR)	4 3/4"	HTC	STR-30	5331'/ 5573'	242'	20.0	12.1
#2	4 3/4"	HTC	STR-30	5573'/ 6853'	1,280'	68.0	18.8
#3	4 3/4"	HTC	STR-30	6853'/ 8400'	1547'	47.0	32.9

Customer ... : Mobil (Utah)
Platform ... : RATHERFORD UNIT #18-13
Slot/Well .. LEG #2

MEASURED DEPTH	ANGLE DEG	DIRECTION DEG	TVD	NORTHINGS FEET	EASTINGS FEET	VERTICAL SECTION	DOG LEG
5300	1.13	140.59	5299.44	1.86 S	45.83 W	33.91	0
5324	1.28	138.04	5323.43	2.24 S	45.5 W	33.41	0.66
5331	2.8	310	5330.43	2.19 S	45.58 W	33.51	58.16
5341	6.6	310	5340.4	1.66 S	46.21 W	34.33	38
5351	10.1	310	5350.29	0.73 S	47.32 W	35.78	35
5373	17.8	310	5371.62	2.68 N	51.38 W	41.08	35
5552	90	310	5470.25	89.61 N	154.99 W	176.33	40.34

MUD REPORT

OPERATOR: MOBIL
WELL NAME: RATHERFORD UNIT #18-13 NW 1-A HORIZONTAL LATERAL LEG#2 & SIDETRACK#1

DATE	DEPTH	WT	VIS	PLS	YLD	GEL	pH	WL	CK	CHL	CA	SD	OIL	WTR
8/18/97	5331'	8.3	28	2	1	0/0	11.6	41.2	0	9500	580	--	4%	96%
8/19/97	NO CHECK													
8/20/97	5376'	8.3	28	2	1	0/0	11.7	41.9	0	9000	560	--	4%	96%
8/21/97	5900'	8.4	28	2	1	0/0	11.6	NC	0	9800	580	--	2%	98%
8/22/97	6324'	8.2	28	2	1	0/0	11.6	29.1	0	10000	480	--	7%	93%
SIDE	TRACK	#1												
8/23/97	6280'	8.2	28	2	1	0/0	11.7	12.2	0	12000	480	--	8%	92%
8/24/97	6853'	8.2	28	2	1	0/0	11.7	12.2	0	18000	480	--	8%	92%
8/25/97	7200'	8.3	28	2	1	0/0	11.6	8.2	<1/32	12100	560	--	11%	89%
8/26/97	8160'	8.3	28	2	1	0/0	11.6	5.2	<1/32	21000	560	--	12%	88%

SAMPLE DESCRIPTIONS

OPERATOR: MOBIL
WELL NAME: RATHERFORD UNIT #18-13 NW 1-A HORIZONTAL LATERAL LEG #2

DEPTH	LITHOLOGY

5331.00 5340.00 "LS ltbrn-crm,brn,occ tan,wh,crpxl,occ micxl,dns,chky,anhy/amor prtgs,tt-vrr intxl/tr chky-anhy POR fl,NFSOC"

5340.00 5350.00 "LS ltbrn,ltgybrn-ltgy-wh,occ brn,crpxl,occ micxl incl,dns,chky,arg ip,tr amor anhy prtg,tt,NFSOC"

5350.00 5360.00 "DOL dkbrn-grdg to mbrn,crpxl,dns,lmy ip-occ grdg to dol arg LS,sl shy,rr dkbrn CHT frag,tt-vrr intxl POR,NFSOC,w/dns LS AA,tt-tr intxl POR,rr sact dull yel-orngyel FLOR,n vis STN or CUT"

5360.00 5370.00 "LS tan,ltgybrn-ltgy-wh,ltbrn,occ brn,crpxl,occ micxl,pred dns,chky prtgs-arg ip,sl anhy,tr scat CHT AA,occ sl dol-grdg to lmy DOL,tt-tr intxl POR,tr dull yel-yelorng FLOR,NSOC,w/scat DOL AA"

5370.00 5380.00 "SH dkbrnblk grdg to blk,frm-mhd,sbblky-sbplty-sbsplty,sl slty,sl lmy,carb,sooty "

5380.00 5390.00 "LS tan-ltbrn,ltgybrn-ltgy-wh,occ brn,crpxl-micxl,pred dns/chky prtgs-arg ip,sl anhy,tr scat CHT AA,tt-tr intxl POR,tr-rr dull yel-yelorng FLOR,NSOC,w/scat DOL AA"

5390.00 5400.00 "DOL AA,lmy ip-occ grdg to dol arg LS,sl shy,tt-vrr intxl POR,NFSOC,w/dns LS AA,tt-tr intxl POR,rr scat dull yel-orngyel FLOR,n STN or CUT"

5400.00 5410.00 "LS ltgy-gybrn-brn,crpxl,occ micxl,rthy-arg,sl dol,shy ip,chty-dkbrn-blk CHT frag,thn calc arg crpxl shy DOL lams,v thn dkgy-dkgybrn dol-calc v sl carb slty SH,n vis POR,NFSOC"

5410.00 5420.00 "LS AA,w/intbd DOL & SH AA,tt,NFSOC,gy-dkgy-blk CHT frag,scat mic-Crin fos"

5420.00 5430.00 "LS AA,bcmg slty ip,DOL-SH-CHT AA,tt,v rr mnrl FLOR,NSOC,grdg to ltgy-gy calc mica sl sdy v arg SLTST"

5430.00 5440.00 "LS ltgy-gybrn-tan-brn,crpxl-micxl,rthy-slty,sl arg,dol ip,v rr mic fos,sl anhy,tt,NFSOC,/w thn intbd brn-gybrn micxl arg sl calc DOL tt,NFSOC & gy dol-calc sl mica carb SH,scat ltgy-trnsl-dkbrn CHT frag"

5440.00 5450.00 "LS AA,bcmg wh,cln,v rr mic fos,tr mnrl FLOR,NSOC,thn mbrn-dkbrn arg shy DOL,dkgy-blk sl carb SH,scat dkbrn-ltgy-trnsl CHT"

5450.00 5460.00 "LS wh-crm-tan,ltgy,crpxl-micxl,rthy-slty,occ cln,sl dol,grdg to v lmy SLTST,v rr frac-intxl POR,rr dull-bri yel FLOR,spty brn STN,v rr p dif CUT,W/DOL-CHT AA,grdg to blk carb SH"

5460.00 5480.00 "SH dkgy-blk sbblky-sbplty mica calc-dol,sl slty carb,w/thn ltgy-tan crpxl-micxl v arg-sl shy dns tt LS & mbrn-brn-gy crpxl-micxl dns sl mrly DOL & v rr smky gy CHT frag"

5480.00 5490.00 "SH AA,grdg to v lmy,sl arg,shy ip,crpxl-micxl DOL,v rr mic fos,sl slty,tt,NFSOC,w/thn intbd & grdg to v dol crpxl-micxl cln-arg-sl slty LS,tt,NFSOC & scat lt-mbrn CHT frag"

DEPTH	LITHOLOGY

5490.00 5500.00 "LS crm-tan,occ wh-mbrn,crpxl-vfxl,dns-gran,sl micsuc,tr sl ooc GRNST & thn tt sl fos PKST,tr intxl-v rr ool POR,tr spty bri yel FLOR,v rr fnt STN,tr fr slow-mod fast CUT,scat trnsl-dkbrn CHT frag,thn calc crpxl-micxl arg tt DOL incl"

5500.00 5520.00 "LS crm-tan-brn,occ wh-mbrn,crpxl-micxl,vfxl-gran ip,occ micsuc,ooc-oom ip,pred GRNST,thn tt-sl ool PKST,tt-g intxl-tr ool POR,mfr-g dull-bri yel FLOR,tr-fr ltbrn-spty blk STN,fr-g mod fast CUT,w/thn dkbrn dns lmy-shy DOL,scat lt-dkbrn CHT frag,tr SH CVGS"

5520.00 5530.00 "LS AA,incr sl ool dns PKST-rr mic fos,sl alg POR,decr POR-FLOR-STN-CUT,scat CHT-DOL frag-incl,rr SH CVGS"

5530.00 5550.00 "LS tan-brn,occ wh-crm,crpxl-vfxl,gran-micsuc ip,occ dns-cln,ooc-ool GRNST,thn sl ool sl fos PKST,w/thn intbd arg mbrn-gybrn micxl lmy sl shy DOL,scat rr gy-dkbrn CHT frag,v sl anhy,tr-g intxl-fr ool POR,fr-g dull-bri yel FLOR,fr brn-tr blk STN,g fast CUT"

5550.00 5560.00 "LS AA,sl incr PKST,v sl decr POR-FLOR-STN-CUT,incr dkgy-dkbrn CHT frag,incr gybrn-dkbrn crpxl-micxl,rthy,calc,sl shy DOL incl NFSOC"

5560.00 5573.00 "LS tan-brn,occ wh-crm,crpxl-vfxl,gran-micsuc ip,occ dns-cln,ooc-ool GRNST,thn sl ool sl fos PKST,w/thn intbd DOL AA,rr CHT frag,tr-g intxl-fr ool POR,fr-g dull-bri yel FLOR,fr brn-tr blk STN,fr-g mod fast-fast CUT"

5573.00 5580.00 "TR CVGS AFTER TRIP P-FR SPL"
"LS tan-crm,crpxl-micxl,occ ooc-oom vfxl GRNST,pred dns tt cvgs,w/scat ool-intxl POR,tr spty dull yel FLOR,n-rr brn STN,tr mod fast cut w/tr gybrn micxl v arg DOL & blk carb SH cvgs-rr CHT frag"

5580.00 5600.00 "LS tan-brn,occ crm,wh ip,crpxl-vfxl,micsuc-gran ip,occ ooc-oom,sl alg,pred GRNST,occ sl ool cln-dns PKST,DOL cmt ip,anhy ip,v rr trnsl-brn CHT frag,fr-g ool-intxl POR,fr dull-bri yel FLOR,fr-g ltbrn-brn STN,fr-g mod fast stmg CUT,w/tr DOL-SH CVGS"

5600.00 5610.00 "NOTE:DECR CVGS FR-G SPL"
"LS AA,sl incr sl ool PKST,tr alg mat,sl decr intxl-ool POR,fr dull-bri yel FLOR,fr-g ltbrn-tr blk STN,fr-g mod fast stmg CUT,w/tr DOL-SH CVGS"

5610.00 5630.00 "LS tan-brn-mbrn,micxl-vfxl,gran-micsuc,ooc-sl oom,tr alg mat,pred GRNST,w/scat intbd sl ool PKST,v rr bf-brn CHT frag,sl anhy,occ DOL cmt,v rr mic-Crin fos,fr-g ool-intxl-rr alg POR,fr-g dull-bri yel FLOR,g brn-tr blk STN,fr-g mod fast stmg CUT"

5630.00 5640.00 "LS AA,sl decr PKST-CHT frag,POR-FLOR-STN-CUT AA"

5640.00 5660.00 "LS tan-brn,occ crm-rr wh,crpxl-vfxl,tt-gran-micsuc,pred
intbd ooc-oom GRNST & ool PKST,v rr Crin fos,sl alg,v rr scat CHT frag,rr ANHY xl,DOL cmt ip,fr-g ool-intxl-rr alg POR,fr-g dull-bri yel FLOR,tr-fr ltbrn-brn STN,tr blk dd o STN,fr-g mod fast CUT"

5660.00 5670.00 "LS AA incr PKST,rr scat trnsl CHT frag,POR-FLOR-STN-CUT AA

5670.00 5690.00 "LS tan-brn,occ crm-rr wh,crpxl-vfxl,tt-gran-micsuc,pred intbd ooc-oom GRNST & ool PKST,v rr Crin fos,sl alg,v rr scat CHT frag,rr ANHY xl,DOL cmt ip,fr-g ool-intxl-rr alg POR,fr-g dull-bri yel FLOR,tr-fr ltbrn-brn STN,tr blk dd o STN,fr-g mod fast CUT"

DEPTH	LITHOLOGY

5690.00 5700.00 "LS tan-brn-mbrn,micxl-vfxl,gran-micsuc,ooc-sl oom,tr alg mat,pred GRNST,w/thn intbd sl ool PKST,v rr bf-trnsl CHT frag,rr ANHY xl-incl,occ DOL cmt,v rr mic,fr-g ool-intxl-rr alg POR,fr-g dull-bri yel FLOR,g brn-tr blk STN,fr-g mod fast stmg CUT"

5700.00 5730.00 "LS tan-brn,occ mbrn-rr wh,crpxl-vfxl,gran-micsuc ip,pred GRNST w/scat ool PKST,rr alg mat,occ DOL rich cmt,rr scat ANHY xl-incl-v rr POR fl,v rr mic fos,fr-g ool-tr-fr intxl-tr alg POR,fr-g dull-bir yel FLOR,fr-g ltbrn-brn STN,rr blk dd o STN,g fast CUT"

5730.00 5740.00 "LS tan-brn-mbrn,micxl-vfxl,gran-micsuc,ooc-sl oom,tr alg mat,intbd GRNST & intbd sl ool PKST,v rr bf-trnsl CHT frag,rr ANHY xl-incl,occ DOL cmt,v rr mic,fr-g ool-intxl-rr alg POR,fr-g dull-bri yel FLOR,tr brn-rr blk STN,fr-g slow-mod fast stmg CUT"

5740.00 5760.00 "LS AA,incr ooc-oom GRNST,decr scat trnsl-bf CHT frag,incr ool-intxl POR,fr-g FLOR-STN-CUT"

5750.00 5770.00 "LS tan-brn-mbrn,micxl-vfxl,gran-micsuc,ooc-sl oom,tr alg mat,pred GRNST,w/scat thn intbd ool PKST,v rr bf-brn CHT frag,sl anhy,occ DOL cmt,v sl fos,fr-g ool-intxl-rr alg POR,fr-g dull-bri yel FLOR,g brn-tr blk STN,fr-g mod fast stmg CUT"

5770.00 5820.00 "LS tan-ltbrn,occ crm,micxl-vfxl,occ crpxl,gran-micsu ip,occ dns,pred ooc-oom GRNST,w/tr thn intbd ool PKST,v rr ANHY xl-incl,sl DOL cmt,v rr scat CHT frag,fr-g ool-fr intxl-v rr alg POR,fr-g dull-bri yel FLOR,fr-g ltbrn STN-tr blk dd o STN,fr-g fast CUT"

5820.00 5830.00 "LS tan-brn,occ mbrn,rr ltgybrn-wh,crpxl-vfxl,occ gran-micsuc,dns ip,pred ooc-oom GRNST,w/thn intbd ool PKST,v sl dol,v rr ANHY xl-v rr POR fl,v sl chty,n-v rr alg mat,fr-g ool-tr intxl-v sl alg POR,fr-g dull-bri yel FLOR,fr-g brn-tr blk STN,fr-g fast CUT"

5830.00 5850.00 "LS AA,incr ooc-oom GRNST,decr scat trnsl-bf CHT frag,incr ool-intxl POR,fr-g FLOR-STN-CUT"

5850.00 5860.00 "LS tan-brn-mbrn,micxl-vfxl,gran-micsuc,ooc-sl oom,tr alg mat,pred GRNST,w/scat thn intbd ool PKST,v rr bf-brn CHT frag,sl anhy,occ DOL cmt,v sl fos,fr-g ool-intxl-rr alg POR,fr-g dull-bri yel FLOR,g brn-tr blk STN,fr-g mod fast stmg CUT"

5860.00 5870.00 "LS AA,ooc-sl oom,tr alg mat,intbd GRNST & intbd sl ool PKST,tr-fr ool-intxl-rr alg POR,fr-g dull-bri yel FLOR,tr brn-rr blk STN,fr-g slow-mod fast stmg CUT"

5870.00 5880.00 "LS tan-brn,occ crm-rr wh,crpxl-vfxl,gran-micsuc ip,occ dns-cln,pred ooc-oom GRNST w/incr stks sl ool occ plty PKST,scat bf-trnsl CHT frag,occ DOL cmt,tr-fr ool-intxl POR,fr dull-bri FLOR,fr brn-tr blk STN,fr slow-mod fast CUT"

5880.00 5900.00 "LS AA,pred ooc-oom GRNST,scat tr ool dns-sl plty PKST,fr-g POR-FLOR-STN-CUT"

5900.00 5910.00 "LS tan-brn,rr crm,crpxl-vfxl,gran-micsuc ip,pred ooc-oom GRNST,scat thn sl ool dns occ plty PKST,v rr scat trnsl CHT frag,occ DOL cmt,scat rr ANHY xl,fr-g ool-fr intxl POR,fr-g dull-bri yel FLOR,fr-g ltbrn-brn STN,rr blk dd o STN,fr-g mod fast-fast CUT"

5910.00 5940.00 "LS tan-brn-mbrn,micxl-vfxl,gran-micsuc,ooc-sl oom GRNST & intbd sl ool PKST,rr bf-trnsl CHT frag,rr ANHY xl-incl,occ DOL cmt,v rr mic,fr-g ool-fr intxl POR,fr-occ g dull-bri yel FLOR,tr-fr brn-rr-tr blk STN,fr-g slow-mod fast stmg CUT"

DEPTH	LITHOLOGY

5940.00 5950.00 "LS AA,pred ooc-oom GRNST,w/thn crm,oc wh ol-dns,occ plty,sl anhy PKST,fr-g intxl-ool POR,fr-g dull-bri yel FLOR,tr-fr ltbrn-brn STN,spty blk dd o STN,fr-g slow-mod fast stmg CUT"

5950.00 5960.00 "LS AA,intbd ooc-oom GRNST & ool dns sl chty,v sl dol,chty-scat trnsl CHT frag,occ ANHY fl POR,tr-fr ool-tr intxl POR,fr dull-bri yel FLOR,tr-fr ltbrn-brn-spty blk STN,fr g mod fast-fast stmg CUT"

5960.00 5970.00 "LS tan-ltbrn,occ crm-rr wh,crpxl-micxl,vfxl-gran ip,occ micsuc,ool-dns plty ip PKST w/intbd ooc-oom GRNST,scat trnsl-ltbrn CHT frag,dol ip,rr ANHY xl-incl,tt-fr intxl-ool POR,g dull-fr bri yel FLOR,fr ltbrn-brn STN,rr splty blk dd o STN,tr-fr g CUT"

5970.00 5980.00 "LS AA,incr ooc-oom GRNST,incr POR-FLOR-STN-CUT"

5980.00 6000.00 "LS tan-crm,occ ltbrn,wh,vfxl-gran,crpxl,ool-oom GRNST/DOL rich cmt,tr scat dns PCKST frag-incl,tr xl ANHY frag,tr tan-bf CHT frag,occ chky plty prtgs-POR fl,g ool-oom/rr agal POR,g even mod bri-dull/scat bri yel FLOR,g ltbrn-tr brn/rr blk pp STN,CUT AA"

6000.00 6020.00 "LS tan-ltbrn/spty brn stn,occ crm-wh,vfxl-gran-oom,occ crpxl,incr oom-ool GRNST/DOL cmt,tr-rr scat PCKST AA,tr xl ANHY AA,tr-rr CHT AA,tr chky prtgs-anhy POR fl,g oom-ooc/rr pp agal POR,g spty bri-mod bri yel FLOR,g ltbrn-brn/tr blk STN,g mod fast CUT"

6020.00 6030.00 "LS AA,pred oom-ooc GRNST/tr DOL cmt,tr scat PCKST AA,tr CHT & ANHY AA,POR-FLOR-AA,STN AA/sl incr blk STN,g mod fast-fast strm mlky CUT"

6030.00 6040.00 "LS AA,pred oom-ooc GRNST/tr DOL cmt,tr scat PCKST AA,tr tan-bf CHT frag,tr xl ANHY/occ POR fl,g oom-ooc-intxl POR,g FLOR AA,g-fr ltbrn-brn STN/tr ppblk dd o STN,g mod fast-fast strm mlky CUT"

6040.00 6050.00 "LS AA,pred oom-ooc GRNST/tr DOL cmt,tr scat PCKST AA,sl incr tan CHT frag,chky,sl incr anhy POR fl-xln ANHY frag,POR-FLOR-STN AA,g mod fast-slow strm mlky CUT"

6050.00 6070.00 "LS tan-ltbrn,occ brn-dkbrn,crm-wh,vfxl-gran-ooc,crpxl,ooc-ool-sl oom GRNST/tr DOL cmt,tr scat dns-chky PCKST frag-prtgs,tr xl ANHY & POR fl,tr CHT AA,g ooc-oom/rr pp agal-intxl POR,g spty bri-mod bri yel FLOR,g ltbrn-brn/tr blk STN,g mod fast-slow CUT"

6070.00 6080.00 "LS AA,pred ool-ooc/occ oom GRNST AA,tr scat dns-occ ooc-chky plty PCKST,tr CHT & ANHY AA,POR-FLOR-STN AA,g mod fast-fast strm mlky CUT"

6080.00 6100.00 "LS tan-ltbrn,occ brn,crm-wh,vfxl-gran-ooc,crpxl,ooc-ool-sl oom GRNST/tr DOL cmt,incr scat dns ool-chky PCKST frag-prtgs,tr xl ANHY & POR fl,inc CHT AA,g ooc-oom-intxl POR,fr-g spty bri-mod bri yel FLOR,g ltbrn-brn/tr blk STN,g slow-mod fast strm CUT"

6100.00 6110.00 "LS AA,ooc-ool-sl oom GRNST/tr DOL cmt,scat dns ool-chky PCKST frag-incl,tr xl ANHY incl & POR fl,scat tan-bf-occ wh CHT frag-incl,g ooc-oom-intxl POR/rr pp agal POR,FLOR-STN-CUT AA"

6110.00 6120.00 "LS AA,pred ooc-oom-sl ool GRNST AA,scat dns-chky ool PCKST,scat CHTfrag-incl AA,trANHY incl AA,POR-FLOR AA,incr brn/blk dd o STN,g mod fast-slow strm mlky CUT"

6120.00 6140.00 "LS tan-ltbrn,occ brn,crm-wh,vfxl-gran,crpxl,ooc-oom-sl ool GRNST/tr DOL cmt,incr scat dns ool-chky PCKST frag-incl,tr xl ANHY & POR fl,incr CHT AA,fr-g ooc-oom-intxl POR/rr pp agal POR,FLOR AA,g ltbrn-brn/tr blk dd o STN,g slow-mod fast strm mlky CUT"

DEPTH	LITHOLOGY

6140.00 6150.00 "LS AA,decr oom-ooc GRNST/tr DOl cmt,incr dns-chky occ ool PCKST,incr tan-ltbrn-occ wh CHT incl-frag,anhy/tr sact xln ANHY frag-occ POR fl,POR AA,fr-g scat mod bri-dull/scat spty bri yel FLOR,g slow-tr mod fast strm mlky CUT"

6150.00 6160.00 "LS AA,vfxl-crpxl,gran,scat ooc-oom GRNST/tr DOL cmt,incr dns-chky plty-occ ool PCKST,scat CHT AA,anhy/incr xln ANHY frag,fr-g intxl-tr ooc-oom POR,FLOR AA,fr-g ltbrn-tr brn & blk pp dd o STN,fr-g dif/tr slow strm CUT"

6170.00 6180.00 "LS ltbrn-tan,occ brn-crm,crpxl-micxl,occ vfxl-gran,ool,v sl alg,pred ool chty PKST,thn ooc-oom GRNST,trnsl-bf CHT frag,sl dol,anhy-rr ANHY fl POR,v rr frac,styl ip,tt-tr ool-intxl-rr alg POR,tr bri-dull yel FLOR,tr brn-rr blk STN,tr-fr mod fast stmg CUT"

6180.00 6190.00 "LS AA,sl incr ooc-oom GRNST,incr ool-intxl-alg POR,tr-fr dull-bri yel FLOR,tr brn-ltbrn STN,rr blk dd o STN,tr-fr mod fast CUT"

6190.00 6200.00 "LS AA,pred dns,occ wh,ool ip,occ plty,chty PKST,w/thn intbd ooc-sl alg GRNST,tt-tr intxl-ool-v rr alg POR,tr dull-bri yel FLOR,rr-tr ltbrn STN,v rr blk dd o STN,tr of fr mod fast stmg CUT"

6200.00 6210.00 "LS AA,sl incr plty-chky sl ool PKST,v thn occ ooc-oom LS GRNST,scat trnsl-bf CHT frag,anhy-ANHY xl-incl,occ POR fl,rr-tr ool-intxl POR,tr dull-bri yel FLOR,STN-CUT AA"

6210.00 6220.00 "LS ltbrn-tan,occ brn,rr crm-wh,crpxl-micxl,rr vfxl-gran,plty ip,pred sl ool-sl fos dns PKST,vrr ooc-oom GRNST,v rr sl slty,scat trnsl-brn-occ smky gybrn CHT frag,ANHY AA,tr intxl-rr ool POR,sl tr FLOR-STN-p slow-mod fast stmg CUT"

6220.00 6242.00 "LS tan-brn,rr crm-wh,pred PKST AA,occ slty,rr ooc-oom GRNST,scat trnsl-dkbrn-v rr smky gybrn CHT frag,rr spty intxl-v rr ool POR,v rr spty FLOR-STN-CUT,w/thn mbrn micxl-micsuc rthy DOL,rr intxl POR-v rr FLOR-STN-CUT,bcmg dkgy-blk sbblky-sbplty carb SH"

OPERATOR: MOBIL
WELL NAME: RATHERFORD UNIT #18-13 NW 1-A HORIZONTAL LATERAL LEG #2 SIDETRACK#1

DEPTH	LITHOLOGY

5944.00 5960.00 "LS tan,crm-wh,occ brn-ltbrn,crpxl,micxl-vfxl,rr ooc-oom,pred dns chky PCKST,rr-tr scat ool-oom GRNST frag/tr DOL cmt,sl anhy/tr xln ANHY & POR fl,tr scat tan-wh CHT frag,tt-tr intxl-occ ooc-oom POR,fr-g scat mod bri yel FLOR,fr-tr lt-mbrn STN,g-fr CUT"

5960.00 5970.00 "LS AA,incr vfxl-gran,pred GRNST occ ooc-oom ip/tr DOL cmt,scat dns-chky plty PCKST,sl anhy/tr xln ANHY frag,rr CHT frag,g-fr intxl-ooc POR,g even mod bri-bri yel FLOR,fr ltbrn-scat brn STN/tr blk dd o STN,g mod fast-slow strm mlky CUT"

5970.00 5980.00 "LS AA,bcmg incr ooc-oom GRNST,POR-FLOR-STN-CUT AA"

5980.00 6000.00 "LS tan-ltbrn,occ crm-wh,brn,vfxl-gran,crpxl,ooc-oom GRNST/DOL rich cmt,scat dns-rr chky plty PCKST incl-frag,sl anhy/tr xln ANHY frag,rr tan CHT frag,g oom-ooc-intxl POR/tr chky-anhy POR fl,FLOR-STN AA,g mod fast strm mlky CUT"

6000.00 6010.00 "LS AA,pred oom-ooc GRNST/DOL cmt,sl anhy/tr POR fl,rr xln ANHY frag,scat dns-occ chky plty PCKST,rr CHT AA,POR-FLOR-STN-CUT AA"

6010.00 6030.00 "LS tan-crm-wh,ltbrn,occ brn,vfxl-gan-crpxl,oom-ooc GRNST/DOL cmt,scat dns-occ chky plty PCKST frag-incl,sl anhy/sl incr POR fl,rr xln ANHY & CHT frag,g oom-ooc-intxl POR,g even mod bri/scat bri yel FLOR,tr-fr ltbrn-scat brn STN,g mod fast strm mlky CUT"

6030.00 6040.00 "LS tan-ltbrn-crm,crpxl-vfxl,occ gran-micsuc,ooc-oom,poss v sl alg,pred GRNST w/scat thn sl ool PKST,anhy ip,chty-bf-trnsl CHT frag,sl dol,fr intxl-ool POR,fr bri-tr dull yel FLOR,fr ltbrn-rr blk STN,fr-g slow-mod fast stmg CUT"

6040.00 6050.00 "LS AA,sl decr CHT frag,v sl incr PKST,POR-FLOR-STN-CUT AA"

6050.00 6060.00 "LS AA,incr ooc-oom GRNST,scat thn sl chty ool PKST,n vis alg mat,v rr scat Crin fos,fr-g dull-bri yel FLOR,fr intxl-ool POR,fr-g ltbrn-brn STN,v rr blk dd o STN,fr-g mod fast stmg CUT"

6060.00 6070.00 "LS AA,incr scat trnsl-bf CHT frag,sl incr sl ool PKST,POR-FLOR-STN-CUT AA"

6070.00 6090.00 "LS ltbrn-tan,occ crm,crpxl-vfxl,gran-micsuc ip,intbd ooc-oom GRNST & dns-chty sl ool PKST,scat ANHY xl-incl,sl DOL cmt,occ trnsl-bf CHT frag,v rr Crin fos,fr-g intxl-ool POR,fr-g bri yel FLOR,fr ltbrn-brn-rr spty blk STN,fr-g mod fast stmg CUT"

6090.00 6100.00 "LS AA,pred ooc-oom GRNST w/sl ool PKST,scat CHT frag,POR-FLOR-STN-CUT AA"

6100.00 6110.00 "LS tan-ltbrn,rr crm-wh,crpxl-vfxl,gran-micsuc,rr chk,pred ooc-oom GRNST w/thn sl ool ip occ dns rr plty PKST incl,v sl anhy,v rr alg mat,rr scat trnsl CHT frag,sl dol,fr-g ool-fr intxl-rr alg POR,fr bri-dull yel FLOR,fr-g ltbrn-rr blk STN,g mod fast CUT"

6110.00 6120.00 "LS AA,w/n vis alg mat,sl incr PKST,fr intxl-ool POR,fr-g dull-bri yel FLOR,tr-fr ltbrn STN,v rr blk dd o STN,fr-g mod fast-fast stmg CUT"

6120.00 6130.00 "LS AA,incr ool POR,fr-g dull-bri yel FLOR,g ltbrn-tr blk STN,CUT AA"

DEPTH	LITHOLOGY

6130.00 6150.00 "LS tan-ltbrn,rr crm-wh,crpxl-vfxl,gran-micsuc,rr chk,pred ooc-oom GRNST w/thn intbd sl ool occ plty PKST incl,rr ANHY xl-incl,rr scat trnsl CHT frag,v sl alg,sl dol,fr-g ool-fr intxl POR,fr-g bri-dull yel FLOR,fr-g ltbrn-brn STN-rr blk STN,g mod fast CUT"

6150.00 6160.00 "LS AA,w/scat-tr ANHY xl-incl,g ool-fr intxl POR,fr-g dull-bri yel FLOR,fr ltbrn-rr blk STN,rr-tr blk dd o STN,fr-g mod fast-fast stmg CUT"

6160.00 6180.00 "LS tan-ltbrn,rr crm-wh,crpxl-vfxl,gran-micsuc,pred ooc-oom GRNST w/thn sl ool ip occ dns v rr chk rr plty PKST incl,rr ANHY xl-incl,rr scat trnsl-bf CHT frag,sl DOL CMT,fr-g ool-fr intxl POR,fr bri-dull yel FLOR,fr-g ltbrn-rr blk STN,g mod fast CUT"

6180.00 6200.00 "LS tan-ltbrn,occ crm-rr wh,crpxl-vfxl,gran-micsuc,pred ooc-oom GRNST w/thn intbd sl ool-occ dns-rr chk-plty ip PKST,v rr ANHY xl-incl,rr scat trnsl-bf CHT frag,sl DOL CMT,fr-g ool-fr intxl POR,fr bri-dull yel FLOR,fr ltbrn-rr blk STN,g mod fast-fast CUT"

6200.00 6210.00 "LS AA,pred ooc-oom GRNST,decr PKST,POR-FLOR-STN-CUT AA"

6210.00 6220.00 "LS tan-ltbrn,occ crm-rr wh,crpxl-vfxl,gran-micsuc,pred ooc-oom GRNST w/thn intbd vsl ool-rr chk-plty ip tt PKST,rr ANHY xl-incl,scat trnsl-bf CHT frag,sl DOL CMT,fr-g ool-fr intxl POR,fr bri-dull yel FLOR,fr ltbrn-rr blk STN,g mod fast-fast CUT"

6220.00 6230.00 "LS AA,g ooc-oom GRNST,scat dns v sl sil-anhy occ chty PKST,g ool-intxl POR,g bri yel FLOR,fr-g ltbrn-brn STN,rr blk dd o STN,fr-g mod fast-fast stmg CUT"

6230.00 6240.00 "LS pred ooc-oom GRNST AA,incr plty wh-crm dns anhy PKST,incr trnsl-bf CHT frag,scat ANHY xl-intxl-sme POR fl,sl decr POR-FLOR-STN-CUT"

6240.00 6250.00 "LS AA,incr trnsl-bf CHT frag,POR-FLOR-STN-CUT"

6250.00 6260.00 "LS tan-ltbrn-brn,rr crm-wh,crpxl-vfxl,gran-micsuc ip-rr suc,occ plty,intbd ooc-oom GRNST & tt-sl ool PKST,anhy-tr ANHY xl-incl,scat CHT frag,occ DOL cmt,fr-g ool-intxl POR,fr bri-g dull yel FLOR,tr-fr ltbrn-v rr blk STN,fr g mod fast-fast stmg CUT"

6260.00 6270.00 "LS AA,sl incr PKST,rr Crin fos,v sl decr POR-FLOR-STN-CUT"

6270.00 6280.00 "LS sl ool-dns anhy PKST,AA,incr ooc-oom GRNST,chty,DOL cmt,scat ANHY xl-POR fl,tr-fr dull-bri yel FLOR,tr-fr ltbrn-rr blk STN,tr g mod fast-fast stmg CUT"

6280.00 6290.00 "LS tan-ltbrn-crm,occ wh,plty,crpxl-micxl,vfxl-gran ip,rr micsuc,pred sl ool PKST,w/thn ooc-oom GRNST lams,trnsl-bf CHT frag,rr ANHY xl-incl,tt-tr ool-intxl POR,fr dull-rr bri yel FLOR,tr ltbrn-brn-v rr blk STN,tr slow-mod fast stmg CUT"

6290.00 6310.00 "LS ltbrn-tan,wh ip,occ crm,crpxl-micxl,occ vfxl-gran,pred ool plty dns anhy PKST,w/intbd ooc-oom GRNST,scat trnsl-bf CHT frag,rr ANHY xl,sl dol,tt-mfr intxl-ool POR,tr-fr dull-bri yel FLOR,tr-mfr ltbrn-rr blk STN,tr g slow-mod fast-fast CUT"

6310.00 6320.00 "LS pred PKST AA,incr ooc-oom GRNST w/depth,tr-fr intxl-ool POR,fr dull-bri yel FLOR,tr ltbrn-brn-rr blk STN,fr g mod fast-fast stmg CUT"

DEPTH	LITHOLOGY

6320.00 6340.00 "LS tan-ltbrn-brn,occ wh,crpxl-vfxl,gran-plty ip,occ micsuc,pred ooc-oom GRNST w/thn tt sl ool PKST lams,occ DOL cmt,scat ANHY xl-trnsl-bf CHT frag,fr ool-tr intxl POR,fr dull-bri yel FLOR,tr-fr ltbrn STN,rr blk dd o STN,tr-fr g mod fast-fast stmg CUT"

6340.00 6360.00 "LS tan-ltbrn,occ crm-rr wh,crpxl-vfxl,gran-micsuc,pred ooc-oom GRNST w/thn intbd vsl ool-rr chk-plty ip tt PKST,rr ANHY xl-incl,scat trnsl-bf CHT frag,sl DOL cmt,fr ool-fr intxl POR,fr-g bri-dull yel FLOR,fr ltbrn-rr blk STN,g mod fast-fast CUT"

6360.00 6370.00 "LS AA,pred ooc-sl oom GRNST/tr DOL cmt,incr chky plty-dns PCKST frag-incl,sl anhy/tr scat xln ANHY frag,tr scat CHT AA,POR-FLOR-STN-CUT AA"

6370.00 6390.00 "LS tan-ltbrn,occ crm-wh,brn,vfxl-gran,occ crpxl,pred ooc-oom GRNST/DOL cmt,tr dns-chky plty PCKST frag-incl,sl anhy/tr scat xln ANHY frag-incl,tr tan-bf CHT frag,g ooc-oom-intxl POR,g even mod bri/scat bri yel FLOR,g ltbrn-brn/rr blk STN,fr slow-dif CUT"

6390.00 6410.00 "LS AA,vfxl-gran,crpxl,pred ooc-oom GRNST/tr DOL cmt,scat dns occ ool-chky plty PCKST frag-incl,sl anhy/rr scat xln ANHY frag-incl,tr tan-bf CHT frag,g ooc-oom-intxl POR/rr any fl,g even mod bri/scat bri yel FLOR,g ltbrn-brn/tr blk dd o STN,g-fr slow CUT"

6410.00 6430.00 "LS tan-ltbrn,occ crm-wh,brn,vfxl-gran,occ crpxl,pred ooc-oom GRNST/DOL cmt,scat dns-tr chky plty PCKST frag-incl,sl anhy/tr scat xln ANHY frag-incl,tr tan-bf CHT frag,g ooc-oom-intxl POR,g even mod bri/scat bri yel FLOR,g ltbrn-brn/tr blk dd o STN,g CUT"

6430.00 6450.00 "LS tan,ltbrn,occ crm-wh,vfxl-gran,crpxl,pred ooc-oom GRNST/DOL rich cmt,tr scat dns-rr plty chky PCKST,sl anhy/rr POR fl,rr xln ANHY frag-incl,tr tan CHT frag,g ooc-oom-intxl POR,g even mod bri/scat bri yel FLOR,g ltbrn-brn/pp blk STN,g mod fast strm CUT"

6450.00 6470.00 "LS AA,vfxl-gran,crpxl,ooc-oom GRNST,tr scat dns-rr plty chky PCKST,tr DOl cmt,sl anhy/rr POR fl,tr xln ANHY frag-incl,tr tan CHT frag,g ooc-oom-intxl POR,g even mod bri/scat bri yel FLOR,g ltbrn-brn/scat pp blk dd o STN,g slow-mod fast strm CUT"

6470.00 6490.00 "LS AA,pred ooc-oom GRNST/tr DOL cmt,scat dns-rr chky plty PCKST frag-incl,sl anhy/tr xln ANHY frag-incl/tr POR fl,tr tan-ltbrn CHT frag,g ooc-oom-intxl/rr pp agal POR,g even mod bri/scat bri yel FLOR,g ltbrn-brn/tr blk STN,fr-g slow strm mlky CUT"

6490.00 6500.00 "LS AA,ooc-oom GRNST/tr DOL cmt,scat dns-tr chky plty PCKST frag-incl,sl anhy/tr xln ANHY frag,tr tan-ltbrn CHT frag,rr ool,POR-FLOR-STN-CUT AA"

6500.00 6520.00 "LS tan,ltbrn,occ crm-wh,brn,vfxl-gran,crpxl,ooc-oom GRNST/tr DOl cmt,scat dns-tr plty chky PCKST frag-incl,sl anhy/tr scat xln ANHY frag,tr tan-ltbrn CHT frag,rr ool,POR AA,g even mod bri/scat bri yel FLOR,g ltbrn/tr brn & rr blk STN,g slow strm mlky CUT"

6520.00 6540.00 "LS AA,pred ooc-oom GRNST/tr DOL cmt,sl incr dns-chky plty PCKST frag-incl,sl anhy/rr xln ANHY frag-incl-tr POR fl,tr CHT AA,g ooc-oom-intxl/rr pp agal POR,g even dull-mod bri/tr scat bri yel FLOR,g ltbrn-tr brn-blk pp STN,fr-g slow-mod fast strm mlky CUT"

6540.00 6550.00 "LS AA,pred ooc-oom GRNST/tr DOL cmt,scat chky plty-dns PCKST frag-incl,sl anhy/tr scat xln ANHY frag,tr scat CHT AA,POR-FLOR-STN-CUT AA"

DEPTH	LITHOLOGY

6550.00 6580.00 "LS tan,ltbrn,occ crm-wh,brn,vfxl-gran-crpxl,pred GRNST AA,incr dns-tr chky plty PCKST frag,sl anhy/tr xln ANHY frag-incl,tr CHT AA,g ooc-oom-intxl POR,g even mod bri-dull/scat bri yel FLOR,g ltbrn-brn/tr pp blk STN,g mod slow-mod fast strm mlky CUT"

6580.00 6600.00 "LS AA,pred ooc-oom GRNST/tr DOL cmt,sl incr dns-chky plty PCKST frag-incl,sl anhy/rr xln ANHY frag-tr POR fl,tr tan-ltbrn CHT,g ooc-oom-intxl POR,g even dull-mod bri/tr scat bri yel FLOR,g ltbrn-tr brn/tr blk pp STN,g slow-mod fast strm mlky CUT"

6600.00 6620.00 "LS tan-crm-wh,ltbrn,occ brn,vfxl-gran,crpxl,ooc-oom GRNST AA,incr dns-chky plty PCKST frag-prtgs,sl anhy/tr scat xln ANHY,tr CHT AA,rr ool,POR AA/tr chky-anhy fl,g even mod bri-dull/scat bri yel FLOR,g ltbrn-tr brn/rr blk pp STN,g slow strm mlky CUT"

6620.00 6650.00 "LS AA,pred ooc-oom GRNST/tr DOL cmt,incr dns-chky plty PCKST frag-incl,sl anhy/rr xln ANHY frag-tr POR fl,tr tan-ltbrn CHT,g ooc-oom-intxl POR/tr chky fl,g scat dull-mod bri/tr scat bri yel FLOR,g ltbrn-tr brn/rr blk pp STN,g slow-mod fast strm mlky CUT"

6650.00 6660.00 "LS AA,ooc-oom GRNST/tr DOL cmt,sl incr scat dns-chky plty PCKST frag-incl,incr anhy/POR fl,tr tan-ltbrn CHT frag,POR-FLOR-STN-CUT AA"

6660.00 6680.00 "LS tan-ltbrn,crm-wh,occ brn,vfxl-gran,crpxl,pred GRNST AA,decr dns-tr chky plty PCKST frag,sl anhy/tr xln ANHY frag-incl,tr CHT AA,POR AA/tr chky-anhy fl,g even mod bri-dull/scat bri yel FLOR,g ltbrn-tr brn & pp blk STN,g mod slow-mod fast strm mlky CUT"

6680.00 6700.00 "LS AA,pred oom-ooc GRNST AA,scat dns-decr chky plty PCKST,sl anhy/rr xln ANHY frag,tr chky-anhy POR fl,tr CHT AA,g ooc-oom-intxl POR,g-fr scat mod bri-dull/tr scat bri yel FLOR,g-ltbrn-tr brn/scat pp blk dd o STN,g slow-mod fast strm mlky CUT"

6700.00 6720.00 "LS AA,pred ooc-oom GRNST/tr DOL cmt,incr intbd/dns occ ool-chky plty PCKST frag-incl,sl anhy/tr xln ANHY frag-tr POR fl,tr tan-ltbrn CHT frag,g ooc-oom-intxl POR/tr chky fl,g scat dull-mod bri/tr scat bri yel FLOR,g ltbrn-tr brn/rr blk pp STN,CUT AA"

6720.00 6750.00 "LS tan-ltbrn,crm-wh,occ brn,vfxl-gran-crpxl,pred GRNST AA,intbd/PCKST AA,sl anhy/tr xln ANHY frag-incl,tr CHT AA,POR AA/tr chky-anhy fl,g spty mod bri-dull/scat bri yel FLOR,g ltbrn-tr brn & pp blk STN,g mod fast-slow strm mlky CUT"

6750.00 6770.00 "LS tan,ltbrn,crm-wh,occ brn,vfxl-gran,crpxl,pred ooc-oom GRNST/tr DOL cmt,intbd/dns occ ool PCKST,rr chky plty prtgs,sl anhy/rr xln ANY frag,rr mic fos,POR AA/chky fl,POR-FLOR-STN AA,g mod fast strm mlky CUT"

6770.00 6780.00 "LS AA,ooc-oom GRNST/tr DOL cmt,scat dns-rr chky plty PCKST frag-incl,sl anhy/POR fl,tr tan-ltbrn CHT frag,POR-FLOR-STN-CUT AA"

6780.00 6800.00 "LS tan-ltbrn,occ crm-wh,brn,vfxl-gran,crpxl,pred ooc-oom GRNST/tr DOL cmt,scat dns-tr chky plty PCKST,tr scat tan-bf CHT frag,sl anhy/tr POR fl-rr xln ANHY frag,g-fr ooc-oom-intxl POR,g-fr mod bri-dull/scat bri yel FLOR,g ltbrn-brn/rr pp blk STN,CUT AA"

6800.00 6820.00 "LS AA,pred ooc-oom GRNST/tr DOL cmt,incr dns-rr chky plty PCKST frag,sl anhy/tr xln ANHY-tr POR fl,tr tan-ltbrn CHT,g-fr ooc-oom-tr intxl POR,g scat dull-mod bri/tr scat bri yel FLOR,g ltbrn-tr brn/rr blk pp STN,g slow-mod fast strm mlky CUT"

DEPTH	LITHOLOGY

6820.00 6830.00 "LS AA,bcmg incr oom-ooc GRNST/tr DOl cmt,decr scat dns-chky plty PCKST,tr scat tan-ltbrn CHT,sl anhy/tr xln ANHY frag-incl,incr oom-ooc-g intxl POR,incr scat bri yel FLOR,STN-CUT AA"

6830.00 6850.00 "LS AA,pred ooc-oom GRNST/tr DOL cmt,tr dns-rr chky plty PCKST frag,sl anhy/rr xln ANHY frag-tr POR fl,tr tan-ltbrn CHT,g ooc-oom-intxl POR,g even mod bri-scat bri yel FLOR,g ltbrn-brn/tr blk pp STN,g mod fast-fast strm mlky CUT"

6850.00 6860.00 "TR BLK CARB SH AFTER TRIP"

6850.00 6860.00 "LS tan-brn,occ crm-wh,crpxl-micxl,vfxl-gran-micsuc ip,intbd ooc-oom GRNST & dns v sl ool pkty PKST,sl dol,anhy,rr trnsl-bf CHT frag,tt-fr ool-rr intxl POR,fr-g dull-bri yel FLOR,tr-fr brn-v rr blk STN,tr g mod fast stmg CUT"

6860.00 6870.00 "LS AA,incr plty wh PKST & CHT frag,POR-FLOR-STN-CUT AA"

6870.00 6890.00 "LS tan-ltbrn,crm-wh,occ brn,crpxl,micxl-vfxl,occ gran,pred chky plty-dns PCKST intbd/sl dol ooc-oom GRNST,anhy fl/tr xln ANHY frag,tr trnsl-bf CHT frag-incl,tt-fr ool-intxl POR/chky fl,fr-tr dull-mod bri yel FLOR,fr ltbrn-brn STN,tr dif-slow stmg CUT"

6890.00 6900.00 "LS AA,pred dns-decr chky plty PCKST,tr scat ooc ooc GRNST,incr anhy/tr xln ANHY frag,incr chty/scat CHT frag AA,tt-tr intxl POR/chky-anhy fl,decr FLOR AA,tr ltbrn STN/vrr pp blk STN,tr v fnt res ring CUT"

6900.00 6920.00 "LS tan,crm-wh,occ ltbrn,crpxl,vfxl-sl gran-micsuc,dns-chky plty PCKST,tr sl ooc GRNST,sl dol,anhy/tr xln ANHY frag,incr tan-crm-off wh CHT frag-incl,tt-tr intxl POR,tr-fr scat mod bri-dull yel FLOR,STN & CUT AA "

6920.00 6940.00 "LS tan,crm-wh,ltbrn-brn,vfxl-gran-micsuc,crpxl,bcmg ooc-sl oom GRNST/DOL cmt,intbd/dns-chky plty PCKST,anhy/tr xln ANHY frag-incl,scat CHT AA,fr-g intxl-ooc POR/tr POR fl,g-fr mod bri-dull/scat bri yel FLOR,fr ltbrn-tr brn/pp blk STN,g-fr slow strm CUT"

6940.00 6960.00 "LS tan-crm,occ ltbrn,wh,vfxl-gran-micsuc,crpxl,pred GRNST/DOL cmt,sl ooc,intbd/dns-chky plty PCKST,anhy/tr xln ANHY AA,scat tan-trnsl-bf CHT,tt-tr intxl-rr ooc POR/tr fl,g-fr mod bri-dull/scat bri yel FLOR,fr ltbrn-brn/pp blk STN,g slow-mod fast strm CUT"

6960.00 6970.00 "LS AA,pred GRNST/DOL cmt,sl ooc,intbd/dns-chky plty PCKST,ANHY & CHT AA,fr-g intxl-ooc POR/tr POR fl,FLOR-STN AA,fr slow strm CUT"

6970.00 6990.00 "LS AA,vfxl-gran-micxl,crpxl,pred GRNST/DOL cmt,sl incr ooc,intbd/dns-chky plty PCKST,anhy/rr xln ANHY frag-incl,scat CHT AA,g-fr intxl-ooc-rr oom POR/tr POR fl,g even mod bri-scat bri yel FLOR,fr ltbrn-brn/tr pp blk dd o STN,g mod fast strm mlky CUT"

6990.00 7010.00 "LS tan-ltbrn,occ crm-wh,brn,vfxl-gran-micsuc,crpxl,pred ooc-sl oom GRNST/DOL cmt,scat sl ool dns-chky plty PCKST,anhy/rr xln ANHY frag-incl-tr POR fl,CHT AA,g-fr intxl-sl incr ooc-tr oom POR,g even mod bri-scat bri yel FLOR,g mod fast-fast strm mlky CUT"

7010.00 7030.00 "LS AA,pred ooc-sl oom GRNST/DOL rich cmt,intbd-scat dns-tr chky plty PCKST,anhy/tr xln ANHY frag-incl/occ POR fl,scat tan-trnsl-crm CHT frag-incl,g-fr intxl-ooc-rr oom POR,FLOR AA,fr ltbrn-brn/tr pp blk dd o STN,g slow-mod fast strm mlky CUT"

DEPTH	LITHOLOGY

7030.00 7040.00 "LS AA,pred oom-ooc GRNST/DOL cmt,scat dns-chky plty PCKST frag-incl,anhy/rr xln ANHY frag,tr CHT AA,g-fr ooc-intxl POR/tr chky-anhy fl,g even mod bri-bri yel FLOR,STN AA/sl incr pp blk STN,g slow-mod fast strm CUT"

7040.00 7050.00 "LS AA,pred ooc-sl oom GRNST/DOL rich cmt,intbd-scat dns-rr chky plty PCKST,ANHY & CHT AA,POR-FLOR-STN-CUT AA"

7050.00 7070.00 "LS tan-ltbrn,occ crm-wh,brn,vfxl-gran-micsuc,crpxl,pred ooc-sl oom GRNST/DOL cmt,scat dns-rr chky plty PCKST,anhy/rr xln ANHY frag-incl-tr POR fl,CHT AA,g-fr intxl-sl incr ooc-tr oom POR,g even mod bri-scat bri yel FLOR,g mod fast-fast strm mlky CUT"

7070.00 7090.00 "LS AA,pred oom-ooc GRNST/DOL cmt,scat dns-chky plty PCKST frag-incl,anhy/rr xln ANHY frag,tr CHT AA,g-fr ooc-intxl POR/tr chky-anhy fl,g even mod bri yel FLOR,STN AA/sl incr pp blk STN,g slow-mod fast strm CUT"

7090.00 7100.00 "LS AA,pred ooc-sl oom GRNST/DOL rich cmt,sl incr scat dns-chky plty PCKST,ANHY & CHT AA,POR-FLOR-STN-CUT AA"

7100.00 7120.00 "LS tan-ltbrn,occ crm-wh,brn,vfxl-gran,crpxl,pred ooc-sl oom GRNST/DOL cmt,scat dns-incr chky plty PCKST prtgs-fl,anhy/ANHY AA-tr POR fl,CHT AA,g intxl-incr ooc-oom POR,g even mod bri-scat bri yel FLOR,g mod fast-fast strm mlky CUT"

7120.00 7130.00 "LS tan-ltbrn,occ brn,crm-wh,vfxl-gran,crpxl,micsuc ip,ooc-oom GRNST/DOl rich cmt,scat dns-chky plty PCKST,anhy/ANHY AA,tr CHT AA,POR-FLOR-STN-CUT AA"

7130.00 7140.00 "LS tan-ltbrn,occ crm-rr wh,crpxl-vfxl,dns-gran,micsuc ip,v sl anhy,chty,pred ooc-sl oom GRNST w/thn sl ool-occ plty PKST incl-lams,occ DOL cmt,fr-occ g intxl-ool POR,fr-g dull-bri yel FLOR,fr ltbrn-rr blk STN,fr g mod fast-fast stmg CUT"

7140.00 7150.00 "LS AA,sl incr dns PKST,sl decr POR-FLOR,STN-CUT AA"

7150.00 7170.00 "LS tan-ltbrn,occ crm-wh,crpxl-vfxl,dns-gran,micsuc ip,v sl anhy,rr trnsl-ltbrn CHT frag,pred ooc-oom GRNST w/tr thn sl ool-occ plty PKST incl-ptgs,occ DOL cmt,fr-g intxl-ool POR,fr-g dull-bri yel FLOR,fr ltbrn-rr blk STN,fr-g mod fast-fast stmg CUT"

7170.00 7180.00 "LS AA,pred GRNST w/fr amnt ooc-oom,fr-g intxl-tr ool POR,fr-g bri yel FLOR,fr ltbrn-brn STN,tr blk dd o STN,fr-g mod fast-fast stmg CUT"

7180.00 7210.00 "LS tan-ltbrn,occ crm-rr wh,crpxl-vfxl,gran-micsuc,pred ooc-sl oom GRNST,w/thn dns-sl ool-occ fos PKST ptgs-frag,v rr ANHY xl-incl,sl dol,rr scat trnsl-bf CHT frag,occ micritic,fr-g intxl-fr ool POR,fr-g dull-bri yel FLOR,tr-fr ltbrn-rr blk STN,g fast CUT"

7180.00 7190.00 "LS AA,w/sl incr PKST-plty ip,sl decr POR,FLOR-STN-CUT AA"

7210.00 7220.00 "LS AA,sl incr PKST-plty ip,sl decr POR,FLOR-STN-CUT AA"

7220.00 7230.00 "LS tan-ltbrn,occ crm-rr wh,crpxl-vfxl,gran-micsuc,pred ooc-sl oom GRNST,w/thn dns-sl ool-occ fos PKST intbds,rr ANHY xl-rr POR fl,sl dol,scat CHT frag,rr micrite,tr-fr intxl-ool POR,fr-g dull-bri yel FLOR,tr-fr ltbrn-rr blk STN,fr-g mod fast-fast CUT"

DEPTH	LITHOLOGY

7230.00 7250.00 "LS AA,pred ooc GRNST,w/thn rr intbd occ plty PKST-occ frag,g intxl-ool POR,fr-g FLOR-CUT,fr-g ltbrn-tr blk STN"

7250.00 7260.00 "LS tan-ltbrn,occ crm-rr wh,crpxl-vfxl,gran-micsuc,occ dns,pred ooc-occ oom GRNST w/scat sl ool-occ plty PKST frag-lams,sl dol,rr bf CHT frag,occ ANHY xl-rr POR fl,fr-g dull-bri yel FLOR,g intxl-fr ool POR,fr ltbrn-tr blk STN,fr-g mod fast-fast stmg CUT"

7260.00 7280.00 "LS AA,POR-FLOR-STN-CUT AA"

7280.00 7300.00 "LS tan-ltbrn,occ crm,rr wh plty frag,pred ooc-oom GRNST AA,tr micrite,v rr trnsl-bf CHT frag,g intxl-fr ool POR,g dull-bri yel FLOR,fr-g ltbrn STN,rr-tr blk dd o STN,g mod fast-fast stmg CUT"

7300.00 7320.00 "LS AA,w/sl incr ool dns PKST,v sl decr POR,FLOR-STN-CUT AA"

7320.00 7340.00 "LS tan-ltbrn,occ crm-rr wh,crpxl-vfxl,gran-micsuc,occ dns,pred ooc-occ oom GRNST w/rr scat sl ool-occ plty PKST frag-lams,sl dol,rr bf CHT frag,occ ANHY xl-rr POR fl,g dull-bri yel FLOR,g intxl-fr ool POR,fr ltbrn-tr blk STN,fr-g mod fast-fast stmg CUT"

7340.00 7360.00 "LS AA,sl incrg plty wh chk PKST,fr-g intxl-fr ool POR,g dull-bri yel FLOR,tr-fr ltbrn-brn STN,rr spty blk dd o STN,fr-g mod fast-fast stmg CUT"

7360.00 7380.00 "LS tan-ltbrn,occ crm-rr wh,crpxl-vfxl,gran-micsuc,occ dns,pred ooc-occ oom GRNST,w/v rr scat sl ool-occ plty PKST frag-lams,sl dol,rr bf CHT frag,occ ANHY xl-rr POR fl,g dull-bri yel FLOR,g intxl-fr ool POR,fr ltbrn-tr blk STN,fr-g mod fast-fast stmg CUT"

7380.00 7390.00 "LS AA,incr plty-dns-occ chk,sl ool PKST,pred ooc-oom GRNST,rr scat CHT frag,occ ANHY xl-POR fl,fr-g intxl-fr ool POR,fr-g dull-bri yel FLOR,fr ltbrn-brn STN,rr blk dd o STN,fr-g mod fast-fast stmg CUT"

7390.00 7400.00 "LS wh-crm-ltbrn-tan,crpxl-vflx,gran-dns,occ micsuc,pred intbd ooc-oom GRNST & sl ool plty PKST,tr-fr intxl-ool POR,fr dull-bri yel FLOR,tr-fr ltbrn-rr blk STN,fr slow-fast stmg CUT"

7400.00 7410.00 "LS AA,incr ooc-oom GRNST,decr sl pkty-occ ool-dns PKST,incr POR,fr-g FLOR-STN-CUT"

7410.00 7420.00 "LS tan-ltbrn-crm,occ wh,crpxl-vfxl,gran-dns,occ micsuc,pred ooc-oom GRNST,w/v thn scat sl ool occ plty PKST,sl anhy,rr CHT frag,occ dol,fr-g intxl-fr ool POR,fr-g dull-bri yel FLOR,tr-fr ltbrn-rr blk STN,g mod fast-fast stmg CUT"

7420.00 7440.00 "LS AA,pred ooc-tr oom GRNST,w/rr plty-dns sl ool PKST,rr ANHY xl-intxl-v rr POR fl,g POR-FLOR-STN-CUT"

7440.00 7460.00 "LS crm-tan,occ wh,rr ltbrn,crpxl-vfxl,gran-micsuc ip,occ dns,pred sl ooc-oom GRNST,w/v thn-scat plty PKST ptg-frag,sl dol,anhy ip,v rr scat CHT frag,fr-g intxl-tr ool POR,fr-g dull-bri yel FLOR,tr-fr ltbrn-rr brn-spty blk STN,fr-g mod fast-fast CUT"

7460.00 7480.00 "LS AA,v rr trnsl-bf-occ brn CHT frag,POR-FLOR-STN-CUT AA"

7480.00 7500.00 "LS crm-tan,occ ltbrn,rr wh,crpxl-vfxl,gran-micsuc ip,occ dns,pred ooc-sl oom GRNST,w/v rr scat occ plty sl ool PKST ptg-frag,sl dol,anhy ip,v rr CHT frag,fr-g intxl-tr ool POR,fr-g dull-bri yel FLOR,tr-fr ltbrn-rr brn-spty blk STN,fr-g mod fast-fast CUT"

DEPTH	LITHOLOGY

7500.00 7520.00 "LS tan-crm,occ ltbrn-brn,rr wh,vfxl-gran-micsuc ip,occ crpxl,ooc-sl oom GRNST/tr-sl DOl cmt,rr-tr scat dns-vrr chky plty PCKST,anhy/rr xln ANHY frag,vrr-rr tan-bf CHT,g ooc-intxl POR/rr chky fl,FLOR-STN-CUT AA"

7520.00 7540.00 "LS AA,pred ooc-occ sl oom GRNST/DOL rich cmt,tr scat dns-vrr chky plty PCKST,ANHY & CHT AA,g ooc-intxl POR,/tr chky-sl anhy POR fl,g even mod bri/scat bri yel FLOR,g ltbrn-tr brn & scat pp blk dd o STN,g slow-mod fast strm mlky CUT"

7540.00 7560.00 "LS tan-crm,occ ltbrn-brn,rr wh,vfxl-micsuc,gran,crpxl ip,pred ooc-sl oom GRNST,sl incr intbd dns-rr chky plty PCKST,tr DOL cmt,sl anhy/rr xln ANHY frag-POR fl,tr-rr tan CHT frag,POR-FLOR-STN AA/sl incr brn & blk pp dd o STN,g mod fast strm mlky CUT"

7560.00 7580.00 "LS AA,ooc-sl oom GRNST/DOL cmt,tr intbd-scat dns-rr plty chky PCKST,sl anhy/vrr xln ANHY frag,tr-rr CHT AA,g ooc-intxl-rr oom POR,g even mod bri/tr scat bri yel FLOR,g ltbrn-tr brn & blk pp dd o STN,g fast-mod fast strm mlky CUT"

7580.00 7600.00 "LS AA,pred vfxl-micsuc-gran,occ crpxl,ooc-sl oom GRNST,tr scat dns-rr plty chky PCKST,DOL cmt,anhy/tr xln ANHY frag-tr POR fl ip,tr-rr tan-bf CHT frag-incl,g ooc-intxl/rr oom POR,g even mod bri/tr scat bri yel FLOR,g ltbrn-brn/tr pp blk dd o STN,CUT AA"

7600.00 7620.00 "LS tan,occ crm,ltbrn-brn,rr wh,vfxl-micsuc-gran,occ crpxl,pred ooc-oom GRNST/DOL cmt,tr scat dns-rr chky plty PCKST,sl anhy/rr xln ANHY frag-incl/tr POR fl,tr-rr tan CHT frag,g ooc-oom-intxl POR,g mod bri-bri yel FLOR,STN AA,g mod fast-fast strm mlky CUT"

7620.00 7640.00 "LS AA,ooc-oom GRNST/DOL rich cmt,tr scat dns-vrr chky plty PCKST,sl anhy/vrr ANHY & CHT AA,g ooc-oom-intxl POR,tr chky-sl anhy POR fl,g even bri yel FLOR,g ltbrn-brn/tr scat pp blk dd o STN,g fast-mod fast mlky-tr strm CUT"

7640.00 7660.00 "LS tan-crm,occ ltbrn-brn,rr wh,vfxl-micsuc-gran,occ crpxl,pred ooc-oom GRNST,tr intbd-scat dns-vrr chky plty PCKST,tr DOL cmt,sl anhy/vrr xln ANHY frag-tr POR fl,rr tan-trnsl CHT frag,POR-FLOR-STN AA/sl decr brn & blk pp dd o STN,g mod fast mlky-strm CUT"

7660.00 7680.00 "LS AA,ooc-occ oom GRNST/DOL cmt,tr scat-occ intbd dns-rr plty chky PCKST,sl anhy/vrr xln ANHY frag,rr-vrr CHT AA,g ooc-intxl-tr oom POR,g even bri-mod bri yel FLOR,g ltbrn-brn/incr scat blk pp dd o STN,g fast mlky-tr mod slow strm CUT"

7680.00 7700.00 "LS AA,ooc-oom GRNST/DOL cmt,tr scat dns-rr chky plty PCKST frag,sl anhy/tr xln ANHY frag-POR fl,POR-FLOR-STN CUT AA"

7700.00 7720.00 "LS tan-crm,occ ltbrn-brn,rr wh,vfxl-micsuc-gran,occ crpxl,pred ooc-oom GRNST,tr scat dns-vrr chky plty PCKST,tr DOL cmt,sl anhy/vrr xln ANHY frag-tr POR fl,rr tan-trnsl CHT frag,POR-FLOR-STN AA/incr brn & blk pp dd o STN,g mod fast strmg mlky CUT"

7720.00 7740.00 "LS AA,ooc-oom GRNST/DOL cmt,tr scat dns-rr chky plty PCKST frag,sl anhy/tr xln ANHY frag-POR fl,POR-FLOR-STN CUT AA"

7740.00 7760.00 "LS AA,ooc-oom GRNST/DOL rich cmt,tr scat dns-vrr chky plty PCKST,sl anhy/vrr ANHY & CHT AA,g ooc-oom-intxl POR,tr chky-sl anhy POR fl,g even bri yel FLOR,g ltbrn-tr brn & scat pp blk dd o STN,g fast-mod fast strm mlky CUT"

DEPTH	LITHOLOGY

7760.00 7780.00 "LS AA,pred vfxl-micsuc-gran,occ crpxl,ooc-sl oom GRNST,sl incr scat dns-plty chky PCKST,DOL cmt,anhy/tr xln ANHY frag-fl,rr tan-bf CHT frag-incl,g ooc-intxl/rr oom POR,g even mod bri-bri yel FLOR,g ltbrn-brn/tr pp blk dd o STN,g mod fast-fast strm CUT"

7780.00 7790.00 "LS AA,pred ooc-oom GRNST,scat dns-chky plty PCKST,DOL cmt,anhy/tr xln ANHY frag-fl,vrr-rr CHT frag AA,POR-FLOR-STN-CUT AA"

7790.00 7800.00 "LS AA,v rr trnsl-bf-occ brn CHT frag,POR-FLOR-STN-CUT AA"

7800.00 7820.00 "LS tan-crm,occ ltbrn-brn,rr wh,vfxl-micsuc-gran,crpxl,pred ooc-oom GRNST,tr intbd-scat dns-rr chky plty PCKST,tr DOL cmt,sl anhy/rr xln ANHY frag-incl,tr POR fl,vrr tan-ltbrn CHT frag,POR-FLOR-STN AA,g mod fast strm mlky CUT"

7820.00 7840.00 "LS AA,ooc-oom GRNST/DOL cmt,tr scat dns-rr chky plty PCKST frag,sl anhy/tr xln ANHY frag-POR fl,POR-FLOR-STN CUT AA"

7840.00 7860.00 "LS AA,ooc-oom GRNST/DOL rich cmt,scat dns-vrr chky plty PCKST,sl anhy/rr ANHY & CHT AA,g ooc-oom-intxl POR,tr chky-sl anhy POR fl,g even bri yel FLOR,g ltbrn-brn/scat blk pp dd o STN,g fast-mod fast strm mlky CUT"

7860.00 7880.00 "LS AA,pred vfxl-micsuc-gran,incr crpxl,ooc-sl oom GRNST,incr dns-rr plty chky PCKST,DOL cmt,anhy/rr xln ANHY frag-fl ip,vrr tan-bf CHT frag,g ooc-intxl/tr oom POR,g even bri yel FLOR,g ltbrn-brn/scat pp blk dd o STN,g fast-blooming mlky CUT"

7880.00 7900.00 "LS tan,occ crm-wh,ltbrn,rr brn,vfxl-micxl,crpxl,gran-micsuc ip,ooc-oom GRNST/DOL cmt,scat dns-rr chky plty PCKST,sl anhy/rr xln ANHY frag-incl,vrr trnsl-crm CHT frag,g ooc-intxl-rr oom POR/tr chky fl,FLOR-STN-CUT AA"

7900.00 7920.00 "LS AA,pred ooc-oom GRNST,scat-intbd dns-tr chky plty PCKST,DOL cmt,anhy/tr scat xln ANHY frag-POR fl,vrr crm-trnsl-occ tan CHT frag,g ooc-intxl-tr oom POR,g even bri yel FLOR,g ltbrn-brn/tr scat blk pp dd o STN,g mod fast strm-blooming mlky CUT"

7920.00 7940.00 "LS AA,pred ooc-oom GRNST,sl incr scat dns-tr chky plty PCKST,DOL cmt,sl anhy/rr xln ANHY frag-fl,vrr CHT frag AA,POR-FLOR-STN-CUT AA"

7940.00 7960.00 "LS AA,ooc-sl oom GRNST/DOL rich cmt,tr scat dns-vrr chky plty PCKST,sl anhy/vrr ANHY & CHT AA,g ooc-ool-intxl POR,tr chky-sl anhy POR fl,g even bri yel FLOR,g ltbrn-tr brn & scat pp blk dd o STN,g fast-mod fast strm mlky CUT"

7960.00 7980.00 "LS AA,ooc-oom GRNST/DOL cmt,scat dns-rr chky plty PCKST frag,sl anhy/vrr xln ANHY frag-tr POR fl,POR-FLOR-STN CUT AA"

7980.00 8000.00 "LS AA,ooc-oom GRNST/DOL rich cmt,scat dns-vrr chky plty PCKST,sl anhy/rr ANHY,vrr CHT AA,g ooc-intxl-tr oom POR,tr chky-sl anhy POR fl,g even bri yel FLOR,g ltbrn/decr brn & blk pp dd o STN,g mod fast strm mlky CUT"

8000.00 8020.00 "LS AA,ooc-oom GRNST/DOL cmt,tr scat dns-rr chky plty PCKST frag,sl anhy/tr xln ANHY frag-POR fl,POR-FLOR-STN CUT AA"

DEPTH	LITHOLOGY

8020.00 8040.00 "LS tan,occ crm-wh,ltbrn,rr brn,vfxl-micxl,crpxl,gran-micsuc ip,ooc-oom GRNST/DOL cmt,scat dns-rr chky plty PCKST,sl anhy/vrr xln ANHY frag-incl,vrr trnsl-crm CHT frag,g ooc-intxl-rr oom POR/tr chky fl,FLOR-STN-CUT AA"

8040.00 8060.00 "LS AA,pred ooc-sl oom GRNST/DOL cmt,tr scat dns-rr chky plty PCKST frag,sl anhy/rr xln ANHY frag-tr POR fl,g ooc-intxl POR,g even bri yel FLOR,g ltbrn-brn STN,rr-tr ppblk dd o STN,g mod fast-slow strm mlky CUT"

8060.00 8080.00 "LS AA,ooc-oom GRNST/DOL cmt,sl incr scat dns-rr chky plty PCKST frag,sl anhy/rr xln ANHY frag-incl,g ooc-intxl POR/tr POR fl,FLOR-STN AA,g mod fast-fast strm mlky CUT"

8080.00 8100.00 "LS AA,ooc-occ oom GRNST AA,scat dns-tr chky plty PCKST frag-occ incl,DOL cmt,anhy/v rr trnsl-clr xln ANHY frag,v rr tan-crm CHT frag,POR-FLOR-STN-CUT AA"

8100.00 8130.00 "LS tan-ltbrn,rr crm-wh,micxl-vfxl,gran,occ crpxl,micsuc ip,pred ooc-sl oom GRNST w/scat dns,occ ool,v sl chk PKST,sl dol,v sl anhy-rr xl-incl,v rr scat CHT frag,fr-g intxl-fr ool POR,g bri yel FLOR,tr-fr ltbrn STN,rr blk dd o STN,fr-g mod fast-fast CUT"

8130.00 8160.00 "LS AA,incr oom mat,sl incr PKST lams-incl,POR-FLOR-STN-CUT AA"

8160.00 8170.00 "LS crm-tan,occ ltbrn,wh ip,crpxl-vfxl,dns-gran,occ micsuc,intbd ooc-sl oom GRNST & dns sl ool occ plty PKST,scat trnsl-bf CHT frag,sl dol,anhy ip,tt-g intxl-fr ool POR,g bri-dull yel FLOR,tr-fr ltbrn STN,v rr blk dd o STN,fr-g mod fast-fast stmg CUT"

8170.00 8180.00 "LS AA,incr ooc-oom GRNST,incr POR,FLOR-STN-CUT AA"

8180.00 8200.00 "LS tan-ltbrn,occ crm-wh,micxl-vfxl,gran-micsuc ip,occ crpxl,pred ooc-sl oom GRNST w/tr dns,occ ool,v sl chk PKST,sl dol,v sl anhy-rr xl-incl,v rr scat CHT frag,fr-g intxl-fr ool POR,g bri yel FLOR,fr ltbrn STN,rr blk dd o STN,fr-g mod fast-fast stmg CUT"

8200.00 8220.00 "LS AA,w/scat wh-tan,occ chk,plty ip,v sl ool PKST frag-incl,POR-FLOR-STN-CUT AA"

8220.00 8240.00 "LS AA,w/incr scat wh-tan,occ chk,plty ip,v sl ool PKST frag-incl,sl decr intxl-ool POR,FLOR-CUT AA,tr ltbrn-brn STN,v rr-rr blk dd o STN"

8240.00 8260.00 "LS tan-crm,rr wh,micxl-vfxl,gran-micsuc ip,occ crpxl,pred sl ooc-oom GRNST w/scat dns-occ sl ool-v sl chk PKST,sl dol,sl anhy w/v rr xl-incl,v rr scat CHT frag,fr-g intxl-fr ool POR,g bri yel FLOR,fr ltbrn STN,rr blk dd o STN,fr-g mod fast-fast stmg CUT"

8260.00 8280.00 "LS AA,decr PKST frag-incl,fr-g intxl-tr ool POR,g bri yel FLOR,tr-fr ltbrn STN,v rr spty blk dd o STN,fr-g mod fast-fast stmg CUT"

8280.00 8300.00 "LS tan-crm,rr wh,micxl-vfxl,gran-micsuc ip,occ crpxl,pred sl ooc-oom GRNST w/scat dns-occ sl ool-v sl chk PKST,sl dol,sl anhy w/rr xl-incl,v rr scat CHT frag,fr-g intxl-fr ool POR,g bri yel FLOR,fr ltbrn STN,tr blk dd o STN,fr-g mod fast-fast stmg CUT"

8300.00 8320.00 "LS tan-crm,rr wh,crpxl-vfxl,gran-micsuc ip,pred sl ooc-oom GRNST w/incr dns-v rr chk PKST,sl dol,sl anhy w/rr xl-incl,v rr scat trnsl-brn CHT frag,fr-g intxl-fr ool POR,g bri yel FLOR,fr ltbrn STN,tr blk dd o STN,fr-g mod fast-fast stmg CUT"

DEPTH	LITHOLOGY

8320.00 8340.00 "LS tan-crm,rr ltbrn-wh,micxl-vfxl,gran-micsuc ip,occ crpxl,pred sl ooc-oom GRNST w/PKST,AA,v rr ANHY xl-incl,rr scat CHT frag AA,g intxl-tr ool POR,g bri yel FLOR,fr ltbrn STN,rr-tr blk dd o STN,fr-g mod fast-fast stmg CUT"

8340.00 8360.00 "LS AA,fr-g intxl-tr ool POR,g bri yel FLOR,fr-g ltbrn STN,rr-tr blk dd o STN,g mod fast-fast stmg CUT"

8360.00 8380.00 "LS AA,decr trnsl-bf-ltbrn CHT frag,POR-FLOR-STN-CUT AA"

8380.00 8400.00 "LS tan-crm,rr ltbrn-wh,micxl-vfxl,gran-micsuc ip,occ crpxl,pred sl ooc-oom GRNST w/incr intbd occ plty PKST AA,v rr ANHY xl-incl,incr scat trnsl CHT frag,fr-g intxl-rr-tr ool POR,g bri yel FLOR,fr ltbrn STN,rr-tr blk dd o STN,fr-g mod fast-fast stmg CUT"

FORMATION TOPS

OPERATOR: MOBIL
WELL NAME: RATHERFORD UNIT #18-13 NW 1-A HORIZONTAL LATERAL LEG #2

FORMATION NAME		SAMPLES	SAMPLES	DATUM
		MEASURED DEPTH	TRUE VERTICAL DEPTH	KB:4695'
LOWER ISMAY		5386'	5383'	-688'
GOTHIC SHALE		5455'	5438'	-743'
DESERT CREEK		5485'	5457'	-762'
DC 1-A ZONE		5503'	5464'	-769'
*TOP DC 1-A/B TRANSITION ZONE (?)		7100'	5486' to 5487'	-791' to -792'

GEOLOGICAL SUMMARY

AND

ZONES OF INTEREST

The Mobil Exploration and Production U.S. Inc., Ratherford Unit #18-13 Horizontal Lateral Leg 2 was a re-entry of the Mobil Ratherford Unit #18-13 located in Section 18, T41S, R24E, and was sidetracked in a northwesterly direction from 5331' measured depth, 5331' true vertical depth, on August 19, 1997. The curve section was completed on August 20, 1997 at a measured depth of 5573', 5477.4' true vertical depth, and the lateral section was begun in the 1-A porosity zone on the 21st. The lateral reached a measured depth of 6242', true vertical depth of 5454.95' at total depth, with a horizontal displacement of 841.5' and true vertical plane 294.2 degrees, on August 22, 1997, in the Gothic Shale. At this time the drill pipe was pulled back and a sidetrack was begun in the upper Desert Creek 1-A zone at a measured depth of 5944', a true vertical depth of 5475.5', with a horizontal displacement of 544.4' and along a vertical plane of 305.4 degrees. Other than the lateral being sidetracked, the original lateral and the associated sidetrack were drilled with no problems. This lateral and sidetrack used fresh water and then an oil and water emulation with polymer sweeps as the drilling fluid. A very minor amount of oil was noted while drilling the lateral and the sidetrack through the 1-A porosity zone. The background gases noted on the accompanying mud log showed moderate increases while drilling the 1-A porosity in both the lateral and sidetrack sections. The samples had good oil shows through out the drilling of the lateral and the sidetrack in the 1-A section.

The primary objectives of the Ratherford Unit #18-13 Leg 2 horizontal lateral was the upper 1-A porosity bench of the Desert Creek, to identify and define the porosity with in the bench, the effective porosity, staining and reservoir properties in 1-A zone of the Desert Creek Member of the Upper Paradox Formation. The lower 1/3 to 1/2 of the Upper Ismay, the entire Lower Ismay, Gothic Shale, and transition zone at the top of the Desert Creek were drilled during the curve section for this lateral. Kick off point for this lateral was 5331', measured and true vertical depth, in the middle of the Upper Ismay member of the Paradox Formation.

The top of the Upper Ismay was not seen during the drilling of the R.U. 18-13 reentry. The lower 1/3 to 1/2 of the Upper Ismay was predominately cream, light brown to light gray brown, occasionally tan to gray, cryptocrystalline to microcrystalline, chalky to clean, slightly argillaceous, cherty, occasionally fossiliferous limestone, with very thin anhydrite partings. Some very thin, very marly, gray brown to dark brown, cryptocrystalline, slightly calcareous dolomite. There were laminations of very thin dark gray brown to black, carbonaceous, slightly calcareous to dolomitic shales, and scattered brown to black to translucent chert fragments noted through out the lower Upper Ismay. There was no visible porosity noted in the limestones and dolomites of the Upper Ismay, with no visible fluorescence, stain or cut, with no gas increases noted. The very dolomitic limestones at the base of the Upper Ismay graded into the very thin, carbonaceous, dolomitic shale of the Hovenweep.

The top of the Lower Ismay was picked at 5386' measured depth, 5383' true vertical depth, at the base of the very thin Hovenweep shale. The upper 1/2 of the Lower Ismay was predominately a cream to white, tan to dark brown limestone, microcrystalline to cryptocrystalline, scattered streaks of very finely crystalline, occasionally silty to sandy, some clean, very thin algal streaks, cherty with a trace of scattered anhydrite crystals. The interbedded in the lower 1/2, of the Lower Ismay was a light gray to gray, slightly sandy, very argillaceous, micaceous, slightly calcareous to slightly dolomitic siltstone, with minor mineral to very faint oil show, and very poor clay filled porosity. Interbedded in

this siltstone were thin slightly silty, shaley, argillaceous dolomites. This siltstone has been noted in other wells in this area, in the basal Upper Ismay to Lower Ismay zones. The siltstone is the remnant of a slump feature from a higher platform to the east, during middle Lower Ismay to early Upper Ismay time in this area. Through out the Lower Ismay were minor amounts of thin interbedded brown to dark brown, occasionally dark gray brown, cryptocrystalline to microcrystalline, earthy to slightly shaley, dense to microsucrosic dolomite and very thin black carbonaceous shale streaks. Scattered with in the limestones and dolomites were dark brown to black chert fragments and occasional anhydrite crystals and inclusions. At the very base the Lower Ismay, were very thin streaks of intercrystalline to possibly fracture porosity, with no visible fluorescence, stain or cut in the limestones and very thin interbedded dolomites. The Lower Ismay had no gas increases noted, with no visible sample shows. The dolomitic limestones and very thin dolomites at the base of the Lower Ismay became gray brown, very argillaceous and shaley. These basal limestones and dolomites also became very marly and graded into the Gothic Shale.

The top of the Gothic Shale was at 5455' measured depth, 5438' true vertical depth. The Gothic Shale was predominantly dark gray to black, silty, carbonaceous, brittle to firm, subblocky to blocky to platy, calcareous to slightly dolomitic and slightly micaceous. Scattered with in the Gothic were very thin, cryptocrystalline to microcrystalline, earthy, limestone and dolomite partings to inclusions, with very rare scattered anhydrite crystals. The top of the Gothic was gradational from the very thin interbedding of very argillaceous, carbonaceous limestone and very argillaceous, limy dolomite, with the dolomite grading into very dolomitic, carbonaceous shale. The top of the Gothic was picked predominantly by the decrease in penetration rate and a distinct increase in the percentage of shale in the samples.

Between the Gothic Shale and Desert Creek Porosity Members is a transitional zone, which appears to be upwardly gradational. The top of the Desert Creek is commonly picked at the Gothic Shale to transition zone facies change, which in this leg occurred at a measured depth of 5485' and a true vertical depth of 5457'. In this well the zone was a silty to slightly sandy, dolomitic limestone, with very thin interbedded brown, limy, argillaceous to slightly silty dolomites and very thin carbonaceous shales. The limestones were cream to tan, some white to medium brown, cryptocrystalline to microcrystalline, some very finely crystalline, argillaceous, and anhydritic, with scattered anhydrite crystals. The limestones had no visible to very rare, very poor intercrystalline porosity, with only a rare, spotty fluorescence and a very poor stain and cut. The interbedded dolomites were microcrystalline, slightly silty and had no to very rare intercrystalline porosity, with no visible sample show.

The transition zone of the Upper Desert Creek graded into the oolicastic porosity of the 1-A zone. The top of the Desert Creek 1-A porosity zone was picked at 5503' measured depth, 5464' true vertical depth. The pick was based on sample identification as well as a significant increase in the penetration rate. Of note is that the top was picked slightly lower in this curve. This was due to the pick being made at the top the thick porosity bench rather than in the streaky porosity just above the main porosity bench. The top in this lateral was in a very oolicastic to slightly oolmoldic, clean, slightly anhydritic limestone grainstone, which had traces of dolomite cement, some very rare tight, thin dark, very limy dolomite packstones and very rare scattered chert fragments. Noted in the limestone were thinly interbedded tight, cryptocrystalline, occasionally platy, anhydritic to very slightly dolomitic, slightly oolitic, tight limestone packstones near the top and scattered in varying amounts as inclusions and fragments through the lateral. The limestone was cream to tan, light brown to occasionally brown, with predominately fair to good intercrystalline to oolitic porosity, some very rare algal porosity. It appears that the 1-A porosity bench is possibly defined by the interval 5464' true vertical depth to approximately 5482' true vertical depth. The top of the porosity bench was marked by a sharp facies change as the drill rate increased rapidly. The base of the porosity zone was not encountered while landing the curve section or the lateral in this well.

At a measured depth of 5573', 5477' true vertical depth, on August 20, 1997, a trip was made to change from the curve to the lateral bottom hole assemblies, in the lower half of the 1-A porosity zone. The well bore was gradually turned upward to climb back up to the proposed target line. From a measured depth of 5573' to a measured depth of 5963', 5474' true vertical depth, and a horizontal displacement of 571', the limestones were tan to light brown to brown, microcrystalline to very finely crystalline, very oolicastic to slightly oolmoldic, with no visible amount of algal material noted. Throughout the zone there were varying amounts of dolomite cement, translucent to buff chert fragments, cryptocrystalline oolicastic limestone packstone and anhydrite crystals to inclusions. Scattered anhydrite filled porosities were also noted. The limestones had fair to good intercrystalline to oolitic porosity, fair to good dull to bright yellow fluorescence, fair light brown to brown stain and some scattered black dead oil stain, with a fair to good moderately fast diffuse to slow to moderately fast streaming cut.

At a measured depth of 5963', true vertical depth 5474', with a horizontal displacement of 571', the well bore encountered the top of the best porosity in 1-A porosity, as the angle was sharply increased upward to try to drill up to the target line. The well bore was drilled upward to try to require the very good porosity noted between 5464' and 5472' true vertical depths above an apparent tight streak. At 5963' measured depth there was a noticeable decrease in both the porosity and penetration rate. The well path was continued upward toward the target line, to a measured depth of 6142', 5472.5' true vertical depth, and horizontal displacement of 746'. The lithology remained the showed a decreasing amount of oolicastic and slightly oolmoldic limestone grainstones, with decreasing oolitic and intergranular porosity, also a marked decrease in sample shows, along with an increase in tight slightly oolitic, anhydritic, occasionally dolomitic, tight, light brown to tan, limestone packstone. From a measured depth of 6142' to a measured depth of 6210', true vertical depth of 5468', with a horizontal displacement of 810', as the well path continued upward, the lithology was predominately a very tight, slightly oolitic, very cherty, slightly dolomitic, limestone packstone with little to no visible porosity and sample shows. The interval from 6210' to 6227' measured depth, with a true vertical depth of 5466' and a horizontal displacement of 828', the limestone packstone had no visible porosity and no to very rare faint sample shows. In this interval, no to very rare traces of the slightly silty limestone packstone of the Desert Creek transition zone was noticed in the from 6210 to 6220', with a noticeable amount of transition zone material noted in the sample from 6220' to 6230'. At 6227' measured depth, 5466' true vertical depth, the base of the Gothic Shale was encountered, and drilling was halted. At this time due to the lag time for the samples, the drill bit was at a measured depth of 6242', 5465' true vertical depth and a horizontal displacement of 841.5'. The back ground gases decreased through out the interval, from 6130' 6242', as the porosity decreased. At this time the decision was made to pull back to a measured depth of 5944', with a true vertical depth of 5475', and attempt to sidetrack the well bore in the very good oolicastic to oolmoldic limestone grainstone porosity. It appears that the transition zone thickened and the top of the Desert Creek, as well as the Gothic Shale dipped downward in a northwesterly direction at an angle of 89 degrees prior to leveling out to approximately 90 degrees.

The well bore was sidetracked on the first attempt. The lithology was interbedded limestone packstone and oolicastic to oolmoldic limestone grainstones, with spotty sample shows. This lithology was consistent to a measured depth of 5978', with a true vertical depth staying around 5475' as the top of the best porosity was rubbed against. At a measured depth of 5978', at a true vertical depth of 5475' with a horizontal displacement of 584' the lithology returned to the very good oolicasitic to oolmoldic, very slightly dolomitic, occasionally anhydritic to scattered anhydrite crystals and inclusions, very rarely algal limestone grainstone. This lithology was continuous through out the lateral sidetrack, except when the top and base of the porosity zone was bumped. When the top and base was encountered a minor to significant amounts of tight, slightly to very oolitic limestone packstones, with no to very minor amounts of porosity and sample shows noted. At measured depths of 6265' to 6315'(5473.5' TVD), 6617' to 6645' (5482' TVD), 6866' to 6916' (5482' TVD), 7215' to 7226' (5482.5' TVD), 7391' to 7406' (5477.5' TVD), 7626' to 7632' (5481.5' TVD), 7788' to 7796' (5481' TVD), 7909' to 7918' (5479.5'), and 8160' to 8163' (5480.5'), the top of the best

porosity in the 1-A was encountered with minor to significant increased in the tighter, slightly oolitic limestones packstones. These packstones had a marked decrease in porosity and sample show as well as a decrease in the penetration rate. The base of the porosity zone was encountered only twice, at measured depths of 6992' to 7152' (5487' to 5484' TVD), and when the well bore neared and reached total depth, from 8392' to 8400' (5483' TVD). The lithology of the base, as that of the top, was noted as an increase in tighter, slightly platy, oolitic limestone packstones, with decreases in porosity, sample shows and penetration rates. Through out the length of the lateral, the well path paralleled the "3 D" model, but on average the top of the porosity was approximately 3' below the target presented in the "3 D" model, thus the target line was use as a reference line to the top of the porosity.

At total measured depth of 8400', with a true vertical depth of 5483', and a horizontal displacement of 3002' the well bore was terminated on August 26, 1997. Through out the length of the lateral in the 1-A porosity zone, the lithology of the best porosity was a tan to occasionally light brown, some cream, good oolicastic to oolmoldic limestone grainstone, with slightly dolomite cement, occasional anhydrite crystals to inclusions, very rare scattered chert fragments, with a slight increase in scattered dense, slightly oolitic limestone packstone inclusions. These limestones had very good intercrystalline to oolitic porosity, fair to good dull to bright yellow fluorescence, a fair to occasionally good light brown to brown stain, with rare to fair spotty black dead oil stain, and a moderately fast diffuse to slow to moderately fast streaming milky cut. Of note was the lack of crinoid fossils noted near the base of the 1-A zone in other laterals and the thickening of the tight limestone packstones between the transition zone at the top of the Desert Creek and the best porosity of the 1-A zone.

In conclusion, in tracking the well bore through the 1-A bench, the oolicastic limestone grainstone porosity was very good, with the very best porosity, sample shows being consistent through out the length of the lateral. The best porosity of the 1-A dipped at an angle of approximately 89.3 degrees to a horizontal displacement of 1850', then turned upward at an angle of approximately 90.2 degrees to a horizontal displacement of 2010', and turned downward at an angle approaching approximately 89.5 degrees to the well's total horizontal length of 3002'. Near the well's midpoint the porosity appeared to thin to close to 2' to 3' in thickness and had a maximum thickness of almost 18' near the R. U. #18-13 well bore but in the lateral the maximum thickness appeared to be only 7'. The background gases increased until the lateral approached the top and the base and then the gases decreased slightly. No to very subtle facies changes were noted, and were associated with the vertical changes with in the limestones, with no noticeable lateral changes in the 1-A zone. The effective or better porosity was associated with the oolicastic, to very slightly algal limestone grainstone facies, which had fair to good, intercrystalline to oolitic porosity, with very minor anhydrite plugging. The limestone packstone at the top of the 1-A zone had decreased porosity, poor permabilities and decreased shows. The 1-A zone throughout its length penetrated in this well, has well developed porosity and permeability and should enhance the overall effectiveness of this lateral.

MOBIL, Ratherforn Unit #18-13, Northwest Laterals

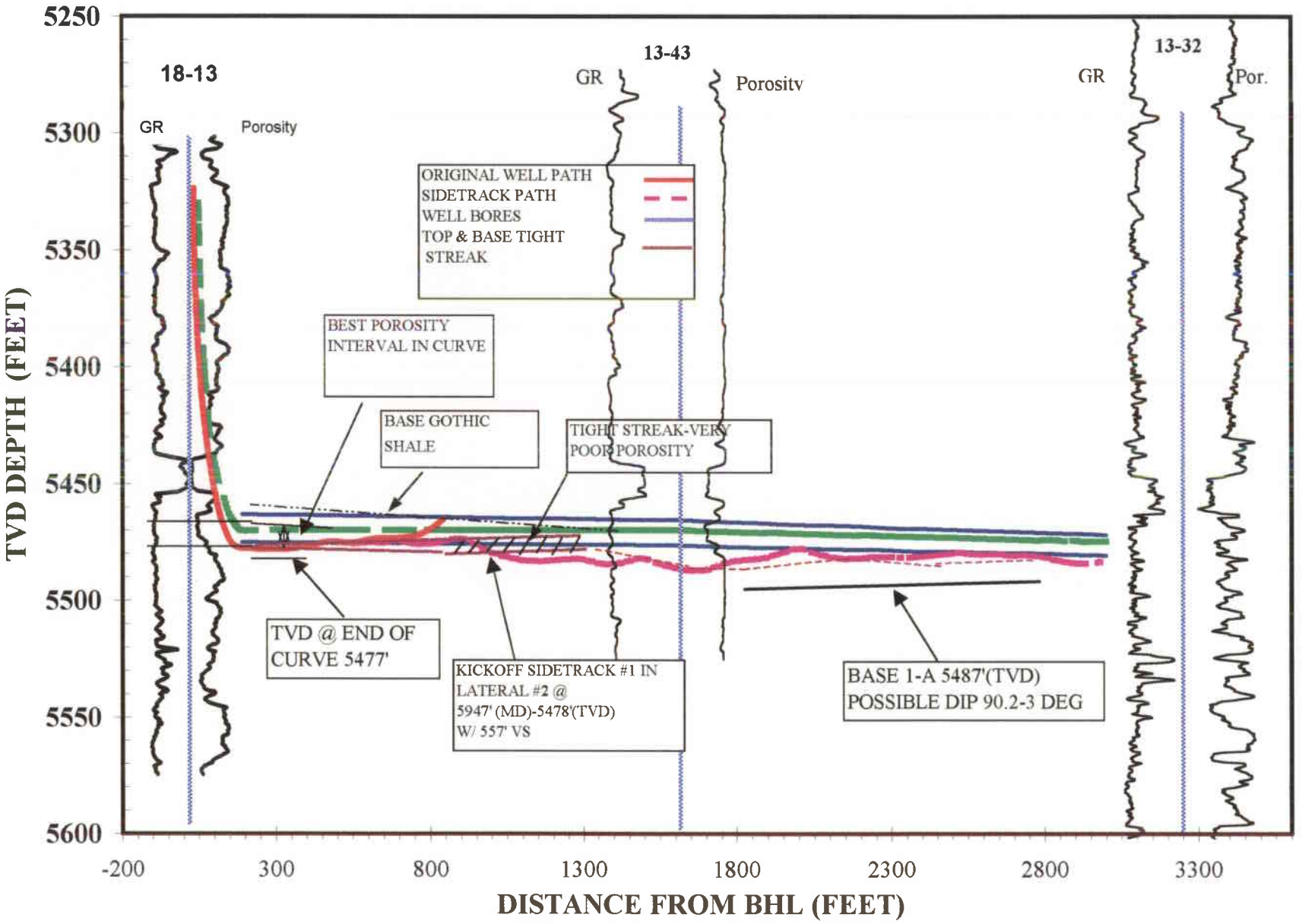

Form 3160-4
(July 1992)

UNITED STATES
DEPARTMENT OF THE INTERIOR
BUREAU OF LAND MANAGEMENT

SUBMIT IN DUPLICATE (See other instructions on reverse side)

FORM APPROVED
OMB NO. 1004-0137
Expires: February 28, 1995

WELL COMPLETION OR RECOMPLETION REPORT AND LOG*

5. LEASE DESIGNATION AND SERIAL NO.: 14-20-603-355

6. IF INDIAN, ALLOTTEE OR TRIBE NAME: NAVAJO TRIBAL

1a. TYPE OF WELL: OIL WELL [X] GAS WELL [ ] DRY [ ] Other

b. TYPE OF COMPLETION: NEW WELL [ ] WORK OVER [ ] DEEP-EN [ ] PLUG BACK [ ] DIFF. RESVR. [ ] Other X SIDETRACK

7. UNIT AGREEMENT NAME: RATHERFORD UNIT

2. NAME OF OPERATOR: MOBIL PRODUCING TX & NM INC.*
*MOBIL EXPLORATION & PRODUCING US INC. AS AGENT FOR MPTM

8. FARM OR LEASE NAME, WELL NO.: RATHERFORD 18-13

3. ADDRESS AND TELEPHONE NO.: P.O. Box 633, Midland TX 79702 (915) 688-2585

9. API WELL NO.: 037-15734

4. LOCATION OF WELL (*Report location clearly and in accordance with any State requirements*)*
At surface: 1980' FSL & 500' FWL (NW/NW).
At top prod. interval reported below
At total depth: * #37

10. FIELD AND POOL, OR WILDCAT: GREATER ANETH

11. SEC., T., R., M., OR BLK. AND SURVEY OR AREA: SEC. 18, T41S, R24E

14. PERMIT NO. | DATE ISSUED

12. COUNTY OR PARISH: SAN JUAN | 13. STATE: UT

15. DATE SPUDDED	16. DATE T.D. REACHED	17. DATE COMPL. (*Ready to prod.*)	18. ELEVATIONS (DF, RKB, RT, GR, ETC.)*	19. ELEV. CASINGHEAD
	8-27-97	9-05-97	4680' GR; 4694' DF	

20. TOTAL DEPTH, MD & TVD	21. PLUG, BACK T.D., MD & TVD	22. IF MULTIPLE COMPL., HOW MANY*	23. INTERVALS DRILLED BY	ROTARY TOOLS	CABLE TOOLS
** #37	** #37		→	X	

24. PRODUCING INTERVAL(S), OF THIS COMPLETION - TOP, BOTTOM, NAME (MD AND TVD)*
** #37 PRDX

25. WAS DIRECTIONAL SURVEY MADE: YES

26. TYPE ELECTRIC AND OTHER LOGS RUN: NO

27. WAS WELL CORED: NO

28. CASING RECORD (*Report all strings set in well*)

CASING SIZE/GRADE	WEIGHT, LB./FT.	DEPTH SET (MD)	HOLE SIZE	TOP OF CEMENT, CEMENTING RECORD	AMOUNT PULLED
13 3/8"	27.1#	177'	17 1/2"	SURFACE / 175 SXS	
8 5/8"	24#	1421'	11"	SURFACE / 455 SXS	
5 1/2"	14 & 15.5#	5670'	7 7/8"	/ 250 SXS	
ORIGINAL	CASING	UNDISTURBED			

29. LINER RECORD

SIZE	TOP (MD)	BOTTOM (MD)	SACKS CEMENT*	SCREEN (MD)

30. TUBING RECORD

SIZE	DEPTH SET (MD)	PACKER SET (MD)
2 7/8"	5357'	

31. PERFORATION RECORD (*Interval, size and number*)
LAT #1 5545-7060' TMD
LAT #2B1(2ST) 5331-8400' TMD

32. ACID, SHOT, FRACTURE, CEMENT SQUEEZE, ETC.

DEPTH INTERVAL (MD)	AMOUNT AND KIND OF MATERIAL USED
5573-5947'	LAT #2B1(2ST) 7854 GALS 15% HCL
6000-8400'	LAT #2A1(2) 48090 GALS 15% HCL
5545-7060'	LAT #1 31836 GALS 15% HCL

33.* PRODUCTION

DATE FIRST PRODUCTION	PRODUCTION METHOD (*Flowing, gas lift, pumping - size and type of pump*)	WELL STATUS (*Producing or shut-in*)
9-08-97	PUMPING	PRODUCING

DATE OF TEST	HOURS TESTED	CHOKE SIZE	PROD'N. FOR TEST PERIOD	OIL - BBL.	GAS - MCF.	WATER - BBL.	GAS - OIL RATIO
9-30-97	24		→	350	120	390	343

FLOW. TUBING PRESS.	CASING PRESSURE	CALCULATED 24-HOUR RATE	OIL - BBL.	GAS - MCF.	WATER - BBL.	OIL GRAVITY - API (CORR.)
		→				

34. DISPOSITION OF GAS (*Sold, used for fuel, vented, etc.*)

TEST WITNESSED BY

35. LIST OF ATTACHMENTS

RECEIVED
NOV 10 1997
DIV. OF OIL, GAS & MINING

36. I hereby certify that the foregoing and attached information is complete and correct as determined from all available records

SIGNED Sue Moseley for TITLE SHIRLEY HOUCHINS/ENV. & REG. TECH DATE 11-05-97

*(See Instructions and Spaces for Additional Data on Reverse Side)

Title 18 U.S.C. Section 1001, makes it a crime for any person knowingly and willfully to make to any department or agency of the United States any false, fictitious or fraudulent statements or representations as to any matter within its jurisdicton.

37. SUMMARY OF POROUS ZONES: (Show all important zones of porosity and contents thereof; cored intervals; and all drill-stem, tests, including depth interval tested, cushion used, time tool open, flowing and shut-in pressures, and recoveries):

FORMATION	TOP	BOTTOM	DESCRIPTION, CONTENTS, ETC.
*			LAT #1 - 932' SOUTH & 1303' EAST LAT #2A1(2) - 541' NORTH & 644' WEST LAT #2B1(2ST) 1909' NORTH & 2318' WEST
'0 & #24			LAT #1(5545-7060' TMD)(5472-5474' TVD) LAT #2A1(2) (5573-6242' TMD)(5477-5465'TVD) LAT #2B1(2ST) (5331-8400'TMD)(5330-5483'TVD)

38. GEOLOGIC MARKERS

NAME	TOP MEAS. DEPTH	TOP TRUE VERT. DEPTH

U.S. GOVERNMENT PRINTING OFF : 1992-774-672

Form 3160-5
(June 1990)

UNITED STATES
DEPARTMENT OF THE INTERIOR
BUREAU OF LAND MANAGEMENT

FORM APPROVED
Budget Bureau No. 1004-0135
Expires: March 31, 1993

SUNDRY NOTICES AND REPORTS ON WELLS

Do not use this form for proposals to drill or to deepen or reentry to a different reservoir.
Use "APPLICATION FOR PERMIT - " for such proposals

SUBMIT IN TRIPLICATE

5. Lease Designation and Serial No.: 14-20-603-355
6. If Indian, Allottee or Tribe Name: NAVAJO TRIBAL
7. If Unit or CA, Agreement Designation: RATHERFORD UNIT
8. Well Name and No.: RATHERFORD 18-13
9. API Well No.: 037-15734
10. Field and Pool, or exploratory Area: GREATER ANETH
11. County or Parish, State: SAN JUAN UT

1. Type of Well: [ ] Oil Well [ ] Gas Well [X] Other
2. Name of Operator: MOBIL PRODUCING TX & NM INC.*
*MOBIL EXPLORATION & PRODUCING US INC. AS AGENT FOR MPTM
3. Address and Telephone No.: P.O. Box 633, Midland TX 79702 (915) 688-2585
4. Location of Well (Footage, Sec., T., R., M., or Survey Description)
SEC. 18, T41S, R243
1980' FSL & 500' FWL (NW/NW)

12. CHECK APPROPRIATE BOX(s) TO INDICATE NATURE OF NOTICE, REPORT, OR OTHER DATA

TYPE OF SUBMISSION	TYPE OF ACTION	
[ ] Notice of Intent	[ ] Abandonment	[ ] Change of Plans
[X] Subsequent Report	[ ] Recompletion	[ ] New Construction
[ ] Final Abandonment Notice	[ ] Plugging Back	[ ] Non-Routine Fracturing
	[ ] Casing Repair	[ ] Water Shut-Off
	[ ] Altering Casing	[ ] Conversion to Injection
	[X] Other SIDETRACK	[ ] Dispose Water (Note: Report results of multiple completion on Well Completion or Recompletion Report and Log form.)

13. Describe Proposed or Completed Operations (Clearly state all pertinent details, and give pertinent dates, including estimated date of starting any proposed work. If well is directionally drilled, give subsurface locations and measured and true vertical depths for all markers and zones pertinent to this work.)*

BOTTOM HOLE LOCATION:

LATERAL #1 932' SOUTH & 1303' EAST F/SURFACE SPOT.
LATERAL #2A1(2) 541' NORTH & 644' WEST F/SURFACE SPOT.
LATERAL #2B1(2ST) 1909' NORTH & 2318' WEST F/SURFACE SPOT.

SEE ATTACHMENT:

14. I hereby certify that the foregoing is true and correct
Signed Sue Moseley for Title SHIRLEY HOUCHINS/ENV & REG TECH Date 11-04-97

(This space for Federal or State office use)
Approved by _____ Title _____ Date _____
Conditions of approval, if any:

Title 18 U.S.C. Section 1001, makes it a crime for any person knowingly and willfully to make to any department or agency of the United States any false, fictitious or fraudulent statements or representations as to any matter within its jurisdiction.

11/28/97
JRB

DRILLED FOOTAGE CALCULATION FOR DIRECTIONAL AND HORIZONTAL WELLS

Well Name: **Ratherford 18-13**
Surface Location: **1980 ' FSL, 500' FWL, Sec. 18, T**

First leg description:	Leg #1
KOP MD:	5351.00
KOP TVD:	5350.43
EOL MD:	7060.00
EOL TVD:	5473.96
Footage drilled:	1709.00
Second leg description:	Leg #2
KOP MD:	5324.00
KOP TVD:	5323.44
EOL MD:	6242.00
EOL TVD:	5465.96
Footage drilled:	918.00
Third leg description:	Leg #2 ST
KOP MD:	5915.33
KOP TVD:	5475.23
EOL MD:	8400.00
EOL TVD:	5482.90
Footage drilled:	2484.67
Fourth leg description:	
KOP MD:	
KOP TVD:	
EOL MD:	
EOL TVD:	
Footage drilled:	
Fifth leg description:	
KOP MD:	
KOP TVD:	
EOL MD:	
EOL TVD:	
Footage drilled:	

Total Footage Drilled (MD):	***5111.67***
Deepest point (TVD):	***5487.12***

ATTACHMENT-FORM 3160-5
RATHERFORD UNIT #18-13
14-20-603-355
NAVAJO TRIBAL
SAN JUAN, UTAH

08-08-97	NOTIFIED NAVAJO EPA @ 9:30 8-7-97 OF INTENT TO DIG & LINE DIRT PIT. LEFT MESSAGE ON VOICE MAIL. MIRU NAVAJO WEST RIG #36. RD POLISHED ROD CLAMPS, BLEED GAS OFF WELL, UNSEAT PUMP. POOH W/RODS & PUMPS, LAY DOWN SAME. LD MA, PERF SUB, SN, & TAC. SWI & SDFN.
08-09-97	RIH W/BIT & SCRAPER TO 5400'. POOH, PU RBP, RIH & SET @ 5400'. CIRC HOLE W/10# BRINE. POOH W/ 2 7/8" TBG LAYING DOWN. TOP OFF HOLE W/10#. SWI & SDFN.
08-10-97	DIG OUT AROUND WELLHEAD. ND BOP & HYDRIL. PU 5 1/2" CSG W/SPEAR, REMOVE OLD SLIPS. CUT OFF OLD CSG HEAD, WELD ON EXT. TO 8 5/8" & 5 1/2" CSGS. WELD ON NEW 11" 8 5/8" CSG HEAD. WELD ON BASEPLATE TO CSG HEAD. PU 5 1/2" SPEAR. SET NEW C-22 SLIPS W/90K. NU NEW 11" 7 1/6" TBG HEAD. TEST GOOD TO 1000#. NU WELL CAP ON TOP OF TBG HEAD, SWI & SDFN.
08-11-97	RDMO NAVAJO WEST RIG #36. POUR REDI-MIX IN CELLAR AROUND BASEPLATE, BACKFILL & LEVEL LOCATION. READY FOR DRILLING RIG.
08-12-97	FINISHED RIGGING DOWN RIG RATHERFORD UNIT 18-14, NOTIFIED JIM THOMSPON W/STATE OF UTAH (AUDIX) @ 1100 HRS.
08-13-97	FINISH RU. PU RIH W/RET. HD, DC'S & AOHDP TO 5400' & RETRIEVE RBP. RIH W/WL SET TIW PKR @ 5366. SHEAR BOLT DID NOT COMPLETELY SHEAR. PULL OUT OF ROPE SOCKET. WAIT ON O/S TO FISH SETTING TOOL.
08-14-97	TIH W/WHIPSTOCK & LATCH INTO PKR. (KEYWAY SET @ 233 AZ) SHEAR PIN ON STARTER MILL. RU POWER SWIVEL, BREAK CIRC. & MILL F/5351-5353', CIRC HOLE CLEAN. TOOH W/STARTER MILL.
08-14-97	TIH WITH O/S. LATCH ON FISHING NECK OF ROPE SOCKET & SHEAR F/PKR. POOH. RIH W/ORIENT SUB/LATCH INTO KEYWAY & RAN GYRO. POOH W/ORIENT TOOLS & LAY DOWN SAME. FINAL REPORT/WILL CLOSE & OPEN FOR LATERAL #1.
08-15-97	PU WINDOW MILL. TIH W/ASSY. BREAK CIRC. & MILL WINDOW F/5351-5358' (1' FORMATION). PUMP, SWEEP, CIRC OUT. FINISHPOOH & LAY DOWN TOOLS. (PKR @ 5366', TOP OF WHIPSTOCK @ 5351', BTM @ 5357', FORMATION @ 5358', WHIPSTOCK ORIENT 125 DEGREE, PKR [illegible] DEGREE). FINAL REPORT FOR LATERAL #1 PREP.
08-15-97	PU CURVE BUILDING ASSY. TIH. RU GYRO & ORIENT TOOL FACE. TIME DRILL F/5358-5365 & DRILL F/5365-5396'.
08-16-97	CONTINUE TO SLIDE DRILL CURVE SECTION F/5396-5545' TD. TOOH W/CURVE BUILDING ASSY. & LAY DOWN TOOLS.
08-17-97	SLIDE/ROTATE DRILL & SURVEY F/5545-6493'.
08-18-97	SLIDE/ROTATE DRILL & SURVEY F/6493-7060'. PUMP SWEEP & CIRC. OUT. POOH TO ABOVE WHIPSTOCK. TOOH & LAY DOWN DIRECTIONAL TOOLS, TIN& LATCH WHIPSTOCK RETRIEVING TOOL, RETRIEVE AND LAY DOWN SAME. LATERAL #1.
08-19-97	PU MAKE UP WHIPSTOCK #2, ORIENT WHIPSTOCK TO 310 AZ. LATCH ASSY. KEYWAY @ 233 AZ. TIH & LATCH INTO PKR. W/ANCHOR SEAL ASSY. SHEAR BOLT ON STARTER MILL & BREAK CIRC. MILL CSG F/5324-26' W/STARTER BOLT ON STARTER MILL, CIRC SWEEP. CONT. MILL F/5326-5331' (1' FORMATION) LAY DOWN MILLS.

ATTACHMENT-FORM 3160-5
RATHERFORD UNIT #18-13
14-20-603-355
NAVAJO TRIBAL
SAN JUAN, UTAH
PAGE 2

08-20-97 PU & MAKE CURVE BUILDING ASSY. RU GYRO DATA & TIH & ORIENT TOOL FACE. TIME DRILL F/5331-5335', SLIDE DRILL & SURVEY F/5335-5363'. PULL GYRO & RD GYRO DATA. SLIDE DRILL F/5363-5550'.

8-21-97 SLIDE DRILL F/5550-5573' & TD CURVE SECTION @ 90.6 ANGLE. CIRC BTMS UP. LD CURVE BLDG ASSY. PU LATERAL ASSY. RIG SERVICE. CONT. IN HOLE TO BTM. RU POWER SWIVEL. SLIDE GRILL & SURVEYS F/5573-5946'.

08-22-97 SLIDE/ROTATE DRILL & SURVEY F/5946-6242', (TVD @ 5465'). CIRC & PULL BIT TO 5947' TMD (5475' TVD) LATERAL #2A1 (2).

08-23-97 REAM THROUGH F/SIDETRACT F/5936-5947', (5475' TVD) TIME DRILL F/5947-5957' (SIDETRACKED @ 5947'(TVD 5475') SLIDE/ROTATE DRILL & SURVEY F/5957-6360'. SURVEY @ 6360' 86.20 ANGLE, AZ. 305.6, TVD 5477.44, 967 VS.

08-24-97 SLIDE/ROTATE DRILL & SURVEY F/6360-6876'

08-25-97 SLIDE/ROTATE DRILL & SURVEY F/6876-7480'.

08-26-97 SLIDE/ROTATE DRILL & SURVEY F/7480-8400' TMD (TD) 5483' TVD, 3002' VS. LATERAL #2B1 (2ST).

08-27-97 PULLED BIT TO WINDOW @ 5300', DISPLACE MUD W/BRINE WTR. LD DC, PH6 TBG, MWD & MUD MOTOR, RIH SET RBP @ 4325'. PRESSURE TEST RBP TO 750 #, HELD OK. POH & LS AOHDP & RET TOOL, ND BOP, CLEAN & JET PITS, RIG DOWN, MOVE TO RATHERFORD 19-12. FINAL REPORT FOR LATERAL #2B1.

COMPLETION

08-28-97 MIRU NAVAJO WEST RIG #36. SICP @ 11:30 WAS 0 PSI. ND WELL HEAD CAP, NU BOPE. TEST BOPE TO 250 PSI LOW, 750 PSI HIGH. 15 MIN. EACH TEST OK. RIH W/2 3/8" TBG TO 4325', RELEASE BRIDGE PLUG, POH & LAY DOWN. RIH W/PH-6 TAIL PIPE & PKR TO 5556.63'. SET & TEST PKR TO 500 PSI. OK. SIFN.

08-29-97 CALLED ARLENE LEE @ 10:00 ON 8-29-97. INFORMED OF 3 DAY NOTICE TO HOOK-UP INJECTION LINES & PUMPING UNITS. CALLED WILSON DEE @ 10:00 ON 8-29-97. INFORMED OF 3 DAY NOTICE FOR 2 3/8' PRODUCTION STRING & PRODUCTION EQUIPMENT. MIRU DOWELL ACID UNIT. SITP @ 7:00 WAS 0 PSI. RIH W/1.75 COILED TBG TO 6242'. COULD NOT WORK COIL TBG INTO SIDETRACK. ACIDIZE LATERAL #2B1 (2ST) F/5947-5573' W/7854 GALS OF 15% HCL ACID. POH W/COILED TBG & RIG DOWN. FLOW WELL TO TEST TANK FOR 4 HOURS. FINAL TBG PRESSURE 100 PSI. SIFN.

08-30-97 SITP @ 7:30 WAS 550 SPI, RIG UP KILL WELL. RELEASE PKR, POH. RIG W/PKR & 2 7/8" TBG TO 6305.84'. POH & LAY DOWN 2 7/8" TBG TO 5988.16'. (END OF COILED TBG) PKR DEPTH OF 4927.52'. SET & TEST TO 500 PSI. OK SIFN.

08-31-97 SITP @ 5:00 WAS 0 PSI. RU COILED TBG UT. RIH W/1 3/4" COILED TBG. TO 8400' SPOT ACID TO END OF COILEDTBG. ACIDIZE LATERAL #2A1 (2) F/8400-6920', 6870 TP 6320', AND F/6210-6000' W/48090 GALS OF 15% HCL ACID. WELL SHUT IN, RD/POOH W/COILED TBG. OPEN WELL TO TEST TANK FLOW 2 1/2 HOURS. SWIFN.

ATTACHMENT-FORM 3160-5
RATHERFORD UNIT #18-13
14-20-603-355
NAVAJO TRIBAL
SAN JUAN, UTAH
PAGE 3

09-01-97	SITP @ 5:00 WAS 950 PSI. OPEN TO TEST TANK, FLOW WELL, RU & KILL WELL. POH W/2 3/8" TBG, PKR, & TAIL PIPE. LAY DOWN EXCESS TAIL PIPE, RIH LATCH ONTO WHIPSTOCK, RELEASE, POH & LAY DOWN WHIPSTOCK & RETV. TOOLS. RIH W/TAILPIPE, PKR & TBG, SET PKR @ 5223.57. TEST TO 500 PSI. OK. SIFN.
09-03-97	SITP @ 4;00 WAS 37 PSI. MIRU DOWELL ACID & COILED TBG UT TO 7060' ACIDIZE LATERAL #1 W/31836 GALS 15% HCL ACID. SWN, POH & RIG DOWN COILED TBG UT. FLOW WELL TO TEST TANK 2 HOURS. SIFN.
09-04-97	SITP @ 6:00 WAS 750 PSI. FLOW WELL TO TEST TANK FOR 4 HOURS, RELEASE PKR & POH, LAY DOWN WORK STRING. PICK-UP & RIH W/PRODUCTION STRING TO 5302'. SIFN.
09-05-97	SITP @ 7:30 WAS 150 PSI. SICP @ 7:30 WAS 150 PSI. RU & KILL WELL, SPACE OUT PRODUCTION TBG/END @ 5357'. SN @ 5326'. RU & RIH W/PUMP RODS & PUMP. RI POLISH ROD. TEST TO 400 PSI. OK. RDMO. WELL TURNED TO PRODUCTION. NOTIFIED ARLENE LEE @ 11:25 ON 9-5-97, INFORMED OF INTENT TO RIG DOWN, MOVE OFF WELL. SET FOR SURFACE LINES. CALLED DIANE WILSON @ 11:30 ON 9-5-97, INFORMED OF INTENT TO RIG DOWN, MOVE OFF, TURNING WELL TO PRODUCTION. FINAL COMPLETION REPORT.

sperry-sun DRILLING SERVICES

Well: RU 18-13

DrillQuest

Customer: Mobil
Folder: Mobil
Field: San Juan County
Project: Utah
Structure: Ratherford Unit
Well: RU 18-13

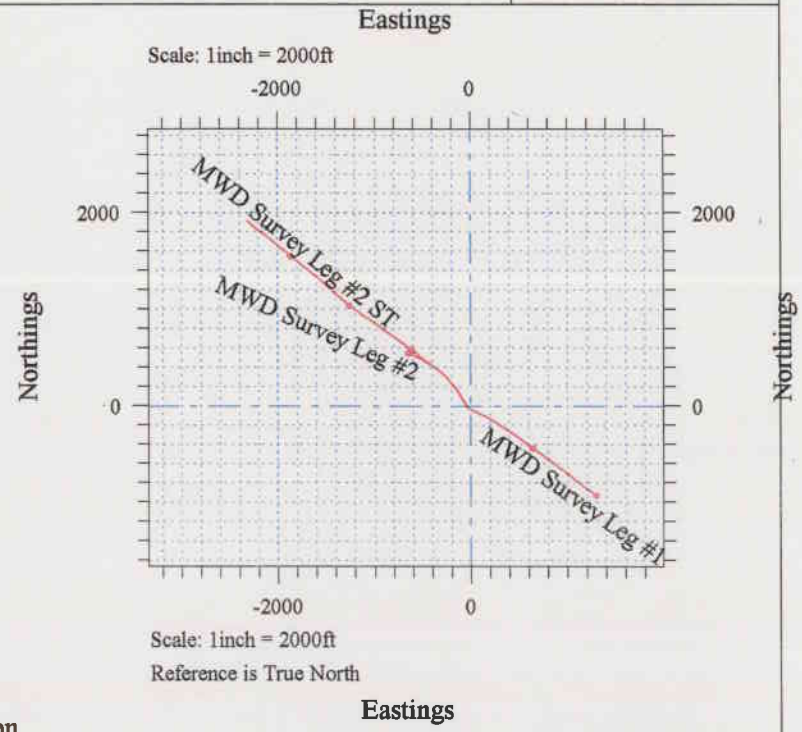

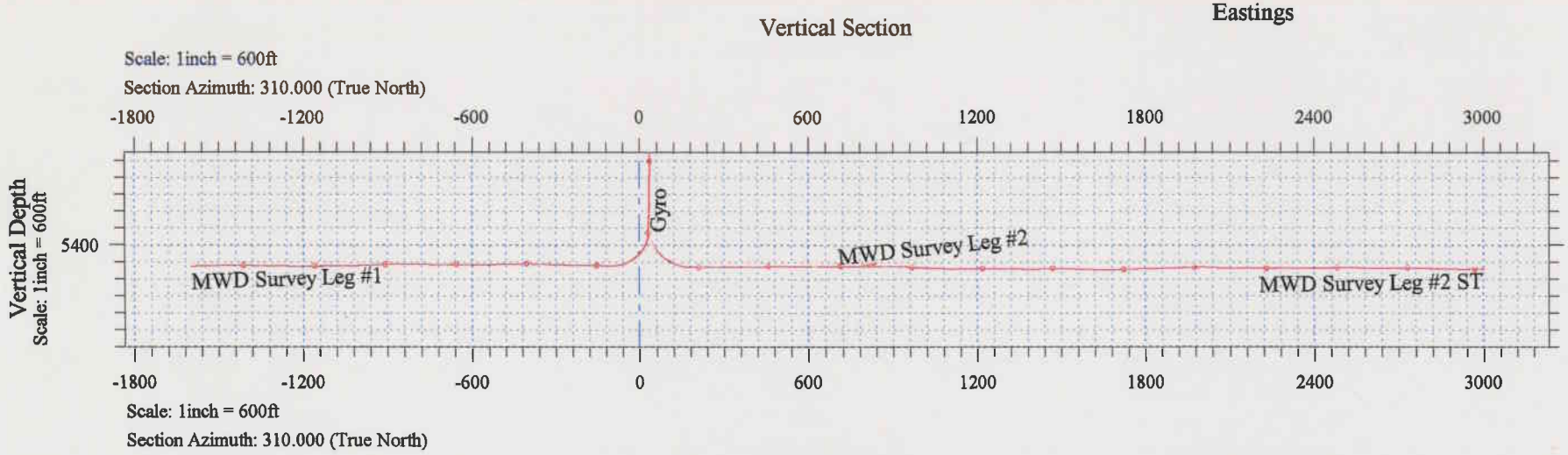

Prepared:	Checked:	Approved:

sperry-sun
DRILLING SERVICES
A DRESSER INDUSTRIES, INC. COMPANY

Mobil
San Juan County
Utah
Ratherford Unit
RU 18-13 - MWD Survey Leg #1

SURVEY REPORT

9 September, 1997

Survey Ref: svy1964

Sper_y-Sun Drilling Se_vices

Survey Report for RU 18-13

Mobil | **Utah**
San Juan County | **Ratherford Unit**

Measured Depth (ft)	Incl.	Azim.	Vertical Depth (ft)	Northings (ft)	Eastings (ft)	Vertical Section (ft)	Dogleg Rate (°/100ft)
Gyro							
0.00	0.000	0.000	0.00	0.00 N	0.00 E	0.00	
100.00	0.230	166.890	100.00	0.20 S	0.05 E	0.15	0.230
300.00	0.330	168.560	300.00	1.15 S	0.25 E	0.87	0.050
500.00	0.300	210.620	499.99	2.17 S	0.10 E	1.33	0.112
700.00	0.280	284.700	699.99	2.50 S	0.63 W	0.92	0.176
900.00	0.910	276.870	899.98	2.18 S	2.68 W	-0.94	0.317
1100.00	1.060	269.400	1099.95	2.01 S	6.11 W	-3.85	0.099
1300.00	1.540	261.370	1299.90	2.44 S	10.61 W	-7.30	0.256
1500.00	1.900	269.190	1499.81	2.89 S	16.59 W	-11.93	0.214
1700.00	1.610	272.660	1699.72	2.80 S	22.71 W	-16.99	0.154
1900.00	1.360	273.930	1899.65	2.51 S	27.88 W	-21.40	0.126
2100.00	1.150	267.670	2099.60	2.43 S	32.26 W	-25.03	0.125
2300.00	0.760	253.080	2299.57	2.90 S	35.53 W	-27.44	0.228
2500.00	0.230	309.430	2499.56	3.03 S	37.11 W	-28.66	0.330
2700.00	0.470	334.240	2699.56	2.03 S	37.78 W	-29.78	0.139
2900.00	0.640	338.530	2899.55	0.26 S	38.54 W	-31.43	0.087
3100.00	0.700	342.320	3099.54	1.95 N	39.32 W	-33.33	0.037
3300.00	0.690	336.170	3299.52	4.21 N	40.18 W	-35.33	0.038
3500.00	0.380	333.680	3499.51	5.91 N	40.96 W	-36.94	0.155
3700.00	0.340	315.110	3699.51	6.92 N	41.67 W	-38.11	0.061
3900.00	0.320	259.540	3899.51	7.24 N	42.64 W	-39.08	0.154
4100.00	0.420	245.530	4099.50	6.84 N	43.86 W	-39.85	0.067
4300.00	0.460	230.960	4299.50	6.03 N	45.15 W	-40.44	0.059
4500.00	0.520	235.460	4499.49	5.01 N	46.52 W	-40.98	0.036
4700.00	0.350	232.970	4699.48	4.13 N	47.75 W	-41.48	0.086
4900.00	0.540	179.130	4899.48	2.82 N	48.23 W	-41.12	0.219
5100.00	0.710	152.920	5099.47	0.77 N	47.65 W	-39.47	0.164
5300.00	1.130	140.590	5299.44	1.86 S	45.83 W	-36.48	0.231
MWD Survey Leg #1							
5351.00	1.460	135.840	5350.43	2.71 S	45.06 W	-35.36	0.680
5358.00	4.800	130.240	5357.42	2.96 S	44.78 W	-34.98	47.857
5368.00	9.200	129.030	5367.34	3.74 S	43.83 W	-33.76	44.082
5378.00	14.100	128.630	5377.13	5.00 S	42.26 W	-31.75	49.006
5388.00	19.100	128.420	5386.71	6.78 S	40.03 W	-28.90	50.004
5398.00	24.200	128.300	5396.00	9.07 S	37.13 W	-25.22	51.002
5408.00	29.400	131.000	5404.93	11.95 S	33.67 W	-20.73	53.394
5418.00	34.900	130.500	5413.39	15.42 S	29.64 W	-15.43	55.064
5428.00	39.900	131.000	5421.33	19.39 S	25.04 W	-9.39	50.092
5438.00	44.200	128.800	5428.75	23.68 S	19.90 W	-2.72	45.449

Continued...

Sperry-Sun Drilling Services

Survey Report for RU 18-13

Mobil
San Juan County

Utah
Ratherford Unit

Measured Depth (ft)	Incl.	Azim.	Vertical Depth (ft)	Northings (ft)	Eastings (ft)	Vertical Section (ft)	Dogleg Rate (°/100ft)
5448.00	46.800	123.700	5435.77	27.89 S	14.15 W	4.41	44.698
5458.00	50.300	121.100	5442.39	31.90 S	7.82 W	11.89	40.054
5468.00	53.600	118.300	5448.55	35.79 S	0.98 W	19.73	39.683
5478.00	57.500	117.600	5454.20	39.66 S	6.30 E	27.91	39.424
5488.00	62.600	116.600	5459.20	43.60 S	14.02 E	36.49	51.730
5498.00	67.600	115.500	5463.40	47.58 S	22.16 E	45.45	50.985
5508.00	72.600	114.900	5466.81	51.58 S	30.67 E	54.71	50.317
5518.00	77.800	114.900	5469.36	55.65 S	39.43 E	64.22	52.000
5545.00	89.300	110.800	5472.39	66.04 S	64.12 E	90.40	45.178
5578.61	90.800	112.600	5472.36	78.47 S	95.34 E	123.11	6.971
5610.34	91.400	114.500	5471.75	91.14 S	124.42 E	154.20	6.278
5642.17	91.300	116.500	5471.00	104.84 S	153.14 E	185.58	6.289
5673.92	90.400	118.400	5470.53	119.47 S	181.31 E	217.05	6.621
5704.84	90.300	120.300	5470.34	134.63 S	208.26 E	247.82	6.153
5736.60	91.100	122.400	5469.95	151.15 S	235.38 E	279.51	7.075
5768.33	92.300	124.400	5469.01	168.61 S	261.86 E	311.21	7.348
5800.08	92.500	126.000	5467.68	186.89 S	287.78 E	342.93	5.074
5831.85	93.100	125.800	5466.13	205.50 S	313.48 E	374.66	1.990
5863.61	88.400	123.300	5465.71	223.50 S	339.63 E	406.40	16.761
5895.40	87.700	123.100	5466.80	240.90 S	366.21 E	438.16	2.290
5927.17	89.500	124.700	5467.57	258.61 S	392.57 E	469.91	7.579
5959.01	89.100	124.000	5467.96	276.58 S	418.86 E	501.75	2.532
5990.85	88.500	123.700	5468.63	294.31 S	445.30 E	533.57	2.107
6022.48	89.600	125.300	5469.15	312.22 S	471.36 E	565.20	6.138
6054.30	90.600	126.800	5469.10	330.95 S	497.08 E	597.01	5.666
6117.12	90.400	127.000	5468.55	368.66 S	547.32 E	659.79	0.450
6179.84	90.600	126.700	5468.00	406.28 S	597.51 E	722.48	0.575
6241.74	91.500	127.400	5466.87	443.56 S	646.90 E	784.33	1.842
6304.89	89.600	126.800	5466.26	481.65 S	697.26 E	847.43	3.155
6368.50	88.000	126.700	5467.59	519.70 S	748.22 E	910.99	2.520
6430.67	87.500	126.700	5470.03	556.83 S	798.02 E	973.09	0.804
6494.15	88.100	126.700	5472.47	594.74 S	848.88 E	1036.49	0.945
6556.84	89.300	125.600	5473.89	631.71 S	899.49 E	1099.15	2.596
6620.48	90.100	126.300	5474.23	669.07 S	951.01 E	1162.78	1.670
6683.92	90.000	127.400	5474.17	707.11 S	1001.77 E	1226.19	1.741
6747.28	91.000	127.900	5473.62	745.81 S	1051.93 E	1289.48	1.765
6810.76	91.200	128.100	5472.40	784.89 S	1101.95 E	1352.86	0.446
6874.36	90.300	127.200	5471.57	823.73 S	1152.30 E	1416.38	2.001
6937.85	89.600	126.300	5471.62	861.72 S	1203.17 E	1479.84	1.796
7001.62	89.100	125.300	5472.35	899.02 S	1254.89 E	1543.60	1.753
7029.00	88.200	124.900	5472.99	914.76 S	1277.28 E	1570.97	3.597
7080.00	88.200	124.900	5473.96	932.49 S	1302.69 E	1601.96	0.000

Continued...

Mobil
San Juan County

Utah
Ratherford Unit

All data is in feet unless otherwise stated. Directions and coordinates are relative to True North.
Vertical depths are relative to Well. Northings and Eastings are relative to Well.

The Dogleg Severity is in Degrees per 100ft.
Vertical Section is from Well and calculated along an Azimuth of 125.000° (True).

Based upon Minimum Curvature type calculations, at a Measured Depth of 7060.00ft.,
The Bottom Hole Displacement is 1602.04ft., in the Direction of 125.596° (True).

sperry-sun
DRILLING SERVICES
A DRESSER INDUSTRIES, INC. COMPANY

Mobil
San Juan County
Utah
Ratherford Unit
RU 18-13 - MWD Survey Leg #2

SURVEY REPORT

10 September, 1997

Survey Ref: svy1966

Sperry-Sun Drilling Services

Survey Report for RU 18-13

Mobil
San Juan County

Utah
Ratherford Unit

Measured Depth (ft)	Incl.	Azim.	Vertical Depth (ft)	Northings (ft)	Eastings (ft)	Vertical Section (ft)	Dogleg Rate (°/100ft)
Gyro							
0.00	0.000	0.000	0.00	0.00 N	0.00 E	0.00	
100.00	0.230	166.890	100.00	0.20 S	0.05 E	-0.16	0.230
300.00	0.330	168.560	300.00	1.15 S	0.25 E	-0.93	0.050
500.00	0.300	210.020	499.99	2.17 S	0.10 E	-1.47	0.112
700.00	0.280	284.700	699.99	2.50 S	0.63 W	-1.12	0.176
900.00	0.910	276.870	899.98	2.18 S	2.68 W	0.65	0.317
1100.00	1.060	269.400	1099.95	2.01 S	6.11 W	3.38	0.099
1300.00	1.540	261.370	1299.90	2.44 S	10.61 W	6.56	0.256
1500.00	1.900	269.190	1499.81	2.89 S	16.59 W	10.84	0.214
1700.00	1.610	272.660	1699.72	2.80 S	22.71 W	15.58	0.154
1900.00	1.360	273.930	1899.65	2.51 S	27.88 W	19.73	0.126
2100.00	1.150	267.670	2099.60	2.43 S	32.26 W	23.13	0.125
2300.00	0.760	253.080	2299.57	2.90 S	35.53 W	25.34	0.228
2500.00	0.230	309.430	2499.56	3.03 S	37.11 W	26.46	0.330
2700.00	0.470	334.240	2699.56	2.03 S	37.78 W	27.61	0.139
2900.00	0.640	338.530	2899.55	0.26 S	38.54 W	29.34	0.087
3100.00	0.700	342.320	3099.54	1.95 N	39.32 W	31.36	0.037
3300.00	0.690	336.170	3299.52	4.21 N	40.18 W	33.47	0.038
3500.00	0.380	333.680	3499.51	5.91 N	40.96 W	35.16	0.155
3700.00	0.340	315.110	3699.51	6.92 N	41.67 W	36.36	0.061
3900.00	0.320	259.540	3899.51	7.24 N	42.64 W	37.31	0.154
4100.00	0.420	245.530	4099.50	6.84 N	43.86 W	37.98	0.067
4300.00	0.460	230.980	4299.50	6.03 N	45.15 W	38.44	0.059
4500.00	0.520	235.460	4499.49	5.01 N	46.52 W	38.84	0.036
4700.00	0.350	232.970	4699.48	4.13 N	47.75 W	39.22	0.088
4900.00	0.540	179.130	4899.48	2.82 N	48.23 W	38.73	0.219
5100.00	0.710	152.920	5099.47	0.77 N	47.65 W	36.98	0.164
5300.00	1.130	140.590	5299.44	1.86 S	45.83 W	33.90	0.231
MWD Survey Leg #2							
5324.00	1.280	138.040	5323.44	2.24 S	45.50 W	33.49	0.694
5331.00	2.800	344.700	5330.43	2.13 S	45.50 W	33.46	56.935
5341.00	6.600	336.000	5340.40	1.37 S	45.79 W	34.18	38.564
5351.00	10.100	334.560	5350.29	0.05 S	46.41 W	35.49	35.060
5361.00	13.700	333.970	5360.07	1.80 N	47.30 W	37.37	36.020
5371.00	17.500	333.650	5369.70	4.22 N	48.49 W	39.84	38.010
5381.00	21.100	333.440	5379.14	7.17 N	49.96 W	42.87	36.007
5391.00	25.000	333.300	5388.34	10.67 N	51.72 W	46.46	39.004
5401.00	28.800	331.600	5397.26	14.68 N	53.81 W	50.64	38.767
5411.00	32.700	330.300	5405.85	19.15 N	56.30 W	55.42	39.580

Continued...

Sperry-Sun Drilling Services

Survey Report for RU 18-13

Mobil **Utah**
San Juan County **Ratherford Unit**

Measured Depth (ft)	Incl.	Azim.	Vertical Depth (ft)	Northings (ft)	Eastings (ft)	Vertical Section (ft)	Dogleg Rate (°/100ft)
5421.00	36.500	329.800	5414.08	24.07 N	59.13 W	60.75	38.106
5431.00	40.200	329.200	5421.92	29.41 N	62.28 W	66.60	37.186
5441.00	43.800	328.600	5429.35	35.14 N	65.74 W	72.94	36.223
5451.00	47.800	328.100	5436.32	41.24 N	69.50 W	79.74	40.160
5461.00	50.900	327.500	5442.83	47.66 N	73.54 W	86.97	31.332
5471.00	54.000	327.300	5448.93	54.34 N	77.82 W	94.53	31.040
5481.00	57.900	327.400	5454.53	61.31 N	82.29 W	102.44	39.009
5491.00	62.100	327.400	5459.53	68.61 N	86.95 W	110.70	42.000
5501.00	66.100	328.000	5463.89	76.21 N	91.76 W	119.27	40.362
5511.00	69.800	328.200	5467.65	84.08 N	96.65 W	128.08	37.046
5521.00	73.600	328.300	5470.79	92.15 N	101.65 W	137.10	38.012
5531.00	77.200	328.300	5473.31	100.38 N	106.73 W	146.29	36.000
5541.00	80.700	328.100	5475.22	108.72 N	111.90 W	155.61	35.055
5551.00	84.600	327.900	5476.50	117.13 N	117.16 W	165.05	39.050
5573.00	90.600	329.700	5477.42	135.92 N	128.54 W	185.85	28.470
5599.76	89.300	327.900	5477.45	158.81 N	142.40 W	211.19	8.297
5631.53	89.500	325.300	5477.78	185.33 N	159.88 W	241.63	8.208
5663.30	90.500	323.400	5477.78	211.14 N	178.40 W	272.42	6.758
5694.37	89.500	320.900	5477.78	235.68 N	197.46 W	302.79	8.666
5726.10	90.400	319.000	5477.81	259.96 N	217.88 W	334.05	6.626
5757.10	91.400	316.500	5477.32	282.90 N	238.72 W	364.76	8.685
5788.21	91.100	314.400	5476.64	305.07 N	260.54 W	395.72	6.817
5820.07	91.200	312.600	5476.00	326.99 N	283.64 W	427.52	5.657
5851.81	92.500	310.200	5474.98	347.97 N	307.43 W	459.23	8.596
5883.56	88.800	306.500	5474.62	367.66 N	332.32 W	490.95	16.479
5915.33	89.000	305.800	5475.23	386.40 N	357.97 W	522.64	2.291
5947.19	91.400	304.600	5475.11	404.76 N	384.00 W	554.38	8.422
5979.05	92.000	302.800	5474.17	422.43 N	410.50 W	586.03	5.953
6010.84	90.600	301.200	5473.45	439.27 N	437.45 W	617.50	6.687
6042.66	90.300	299.500	5473.20	455.35 N	464.91 W	648.87	5.425
6074.41	89.800	298.400	5473.17	470.72 N	492.69 W	680.02	3.806
6106.26	91.000	297.000	5472.95	485.52 N	520.89 W	711.13	5.789
6137.99	91.400	294.900	5472.28	499.40 N	549.41 W	741.90	6.736
6169.85	92.400	293.000	5471.23	512.33 N	578.51 W	772.50	6.736
6201.63	95.400	293.800	5469.07	524.92 N	607.60 W	802.87	9.768
6211.00	95.900	294.200	5468.14	528.71 N	616.12 W	811.83	6.821
6242.00	95.900	294.200	5464.96	541.35 N	644.25 W	841.50	0.000

All data is in feet unless otherwise stated. Directions and coordinates are relative to True North.
Vertical depths are relative to Well. Northings and Eastings are relative to Well.

The Dogleg Severity is in Degrees per 100ft.
Vertical Section is from Well and calculated along an Azimuth of 310.040° (True).

Based upon Minimum Curvature type calculations, at a Measured Depth of 6242.00ft.,
The Bottom Hole Displacement is 841.50ft., in the Direction of 310.040° (True).

sperry-sun

DRILLING SERVICES

A DRESSER INDUSTRIES, INC. COMPANY

Mobil
San Juan County
Utah
Ratherford Unit
RU 18-13 - MWD Survey Leg #2 ST

SURVEY REPORT

22 September, 1997

Survey Ref: svy1973

Sperry-Sun Drilling Services

Survey Report for RU 18-13

Mobil
San Juan County

Utah
Ratherford Unit

Measured Depth (ft)	Incl.	Azim.	Vertical Depth (ft)	Northings (ft)	Eastings (ft)	Vertical Section (ft)	Dogleg Rate (°/100ft)
Gyro							
0.00	0.000	0.000	0.00	0.00 N	0.00 E	0.00	
100.00	0.230	166.890	100.00	0.20 S	0.05 E	-0.16	0.230
300.00	0.330	168.560	300.00	1.15 S	0.25 E	-0.93	0.050
500.00	0.300	210.020	499.99	2.17 S	0.10 E	-1.47	0.112
700.00	0.280	284.700	699.99	2.50 S	0.63 W	-1.12	0.176
900.00	0.910	276.870	899.98	2.18 S	2.68 W	0.65	0.317
1100.00	1.060	269.400	1099.95	2.01 S	6.11 W	3.38	0.099
1300.00	1.540	261.370	1299.90	2.44 S	10.61 W	6.57	0.256
1500.00	1.900	269.190	1499.81	2.89 S	16.59 W	10.85	0.214
1700.00	1.610	272.660	1699.72	2.80 S	22.71 W	15.59	0.154
1900.00	1.360	273.930	1899.65	2.51 S	27.88 W	19.75	0.126
2100.00	1.150	267.670	2099.60	2.43 S	32.26 W	23.15	0.125
2300.00	0.760	253.080	2299.57	2.90 S	35.53 W	25.36	0.228
2500.00	0.230	309.430	2499.56	3.03 S	37.11 W	26.48	0.330
2700.00	0.470	334.240	2699.56	2.03 S	37.78 W	27.63	0.139
2900.00	0.640	338.530	2899.55	0.26 S	38.54 W	29.36	0.087
3100.00	0.700	342.320	3099.54	1.95 N	39.32 W	31.37	0.037
3300.00	0.690	336.170	3299.52	4.21 N	40.18 W	33.49	0.038
3500.00	0.380	333.680	3499.51	5.91 N	40.96 W	35.18	0.155
3700.00	0.340	315.110	3699.51	6.92 N	41.67 W	36.37	0.061
3900.00	0.320	259.540	3899.51	7.24 N	42.64 W	37.32	0.154
4100.00	0.420	245.530	4099.50	6.84 N	43.86 W	37.99	0.067
4300.00	0.460	230.960	4299.50	6.03 N	45.15 W	38.46	0.059
4500.00	0.520	235.460	4499.49	5.01 N	46.52 W	38.86	0.036
4700.00	0.350	232.970	4699.48	4.13 N	47.75 W	39.23	0.086
4900.00	0.540	179.130	4899.48	2.82 N	48.23 W	38.75	0.219
5100.00	0.710	152.920	5099.47	0.77 N	47.65 W	37.00	0.164
5300.00	1.130	140.590	5299.44	1.86 S	45.83 W	33.92	0.231
MWD Survey Leg #2							
5324.00	1.280	138.040	5323.44	2.24 S	45.50 W	33.42	0.664
MWD Survey Leg #2 ST							
5331.00	2.800	344.700	5330.43	2.13 S	45.50 W	33.48	56.935
5341.00	6.600	336.000	5340.40	1.37 S	45.79 W	34.20	38.554
5351.00	10.100	334.560	5350.29	0.05 S	46.41 W	35.51	35.060
5361.00	13.700	333.970	5360.07	1.80 N	47.30 W	37.39	36.020
5371.00	17.500	333.650	5369.70	4.22 N	48.49 W	39.85	38.010

Continued...

Sperry-Sun Drilling Services

Survey Report for RU 18-13

Mobil **Utah**
San Juan County **Ratherford Unit**

Measured Depth (ft)	Incl.	Azim.	Vertical Depth (ft)	Northings (ft)	Eastings (ft)	Vertical Section (ft)	Dogleg Rate (°/100ft)
5381.00	21.100	333.440	5379.14	7.17 N	49.96 W	42.88	36.007
5391.00	25.000	333.300	5388.34	10.67 N	51.72 W	46.48	39.004
5401.00	28.800	331.600	5397.26	14.68 N	53.81 W	50.66	38.767
5411.00	32.700	330.300	5405.85	19.15 N	56.30 W	55.43	39.560
5421.00	36.500	329.800	5414.08	24.07 N	59.13 W	60.77	38.106
5431.00	40.200	329.200	5421.92	29.41 N	62.28 W	66.62	37.186
5441.00	43.800	328.600	5429.35	35.14 N	65.74 W	72.95	36.223
5451.00	47.800	328.100	5436.32	41.24 N	69.50 W	79.75	40.160
5461.00	50.900	327.500	5442.83	47.66 N	73.54 W	86.97	31.332
5471.00	54.000	327.300	5448.93	54.34 N	77.82 W	94.54	31.040
5481.00	57.900	327.400	5454.53	61.31 N	82.29 W	102.44	39.009
5491.00	62.100	327.400	5459.53	68.61 N	86.95 W	110.71	42.000
5501.00	66.100	328.000	5463.89	76.21 N	91.76 W	119.27	40.362
5511.00	69.800	328.200	5467.65	84.08 N	96.65 W	128.08	37.046
5521.00	73.600	328.300	5470.79	92.15 N	101.65 W	137.10	38.012
5531.00	77.200	328.300	5473.31	100.38 N	106.73 W	146.28	36.000
5541.00	80.700	328.100	5475.22	108.72 N	111.90 W	155.61	35.055
5551.00	84.600	327.900	5476.50	117.13 N	117.16 W	165.04	39.050
5573.00	90.600	329.700	5477.42	135.92 N	128.54 W	185.83	28.470
5599.76	89.300	327.900	5477.45	158.81 N	142.40 W	211.16	8.297
5631.53	89.500	325.300	5477.78	185.33 N	159.88 W	241.61	8.208
5663.30	90.500	323.400	5477.78	211.14 N	178.40 W	272.38	6.758
5694.37	89.500	320.900	5477.78	235.68 N	197.46 W	302.75	8.666
5726.10	90.400	319.000	5477.81	259.96 N	217.88 W	334.01	6.626
5757.10	91.400	316.500	5477.32	282.90 N	238.72 W	364.72	8.685
5788.21	91.100	314.400	5476.64	305.07 N	260.54 W	395.68	6.817
5820.07	91.200	312.600	5476.00	326.99 N	283.64 W	427.47	5.657
5851.81	92.500	310.200	5474.98	347.97 N	307.43 W	459.18	8.596
5883.56	88.800	306.500	5474.62	367.66 N	332.32 W	490.90	16.479
5915.33	89.000	305.800	5475.23	386.40 N	357.97 W	522.60	2.291
5947.19	90.200	305.400	5475.45	404.95 N	383.88 W	554.36	3.970
5979.05	91.300	306.700	5475.03	423.69 N	409.63 W	586.14	5.345
6010.88	88.900	308.200	5474.98	443.05 N	434.90 W	617.94	8.891
6042.65	90.700	308.900	5475.09	462.84 N	459.74 W	649.69	6.079
6074.45	90.600	307.900	5474.73	482.59 N	484.66 W	681.48	3.160
6106.18	88.500	307.000	5474.97	501.89 N	509.85 W	713.18	7.200
6138.02	89.200	306.700	5475.61	520.98 N	535.32 W	744.96	2.392
6169.75	90.300	306.300	5475.75	539.85 N	560.83 W	776.63	3.689
6201.46	90.700	305.800	5475.48	558.51 N	586.47 W	808.26	2.019
6233.33	91.800	306.100	5474.78	577.22 N	612.26 W	840.05	3.578
6265.18	91.900	307.400	5473.75	596.26 N	637.77 W	871.83	4.092
6296.96	89.200	308.800	5473.45	615.87 N	662.77 W	903.58	9.570
6328.75	85.100	307.200	5475.03	635.41 N	687.78 W	935.31	13.842
6360.61	86.200	305.600	5477.44	654.26 N	713.35 W	967.01	6.082
6392.39	87.300	305.300	5479.25	672.67 N	739.20 W	998.64	3.587

Continued...

Sperry-Sun Drilling Services

Survey Report for RU 18-13

Mobil **Utah**
San Juan County **Ratherford Unit**

Measured Depth (ft)	Incl.	Azim.	Vertical Depth (ft)	Northings (ft)	Eastings (ft)	Vertical Section (ft)	Dogleg Rate (°/100ft)
6424.18	88.000	305.400	5480.55	691.04 N	765.11 W	1030.30	2.224
6456.03	88.300	305.100	5481.58	709.41 N	791.10 W	1062.02	1.332
6487.73	88.500	304.700	5482.46	727.54 N	817.09 W	1093.59	1.410
6519.52	89.600	304.700	5482.99	745.64 N	843.22 W	1125.23	3.460
6551.36	90.100	304.700	5483.07	763.77 N	869.40 W	1156.94	1.570
6583.16	90.600	304.700	5482.88	781.87 N	895.54 W	1188.60	1.572
6613.81	90.700	305.300	5482.53	799.45 N	920.65 W	1219.13	1.984
6645.48	90.500	307.200	5482.20	818.17 N	946.19 W	1250.73	6.032
6677.29	90.200	306.500	5482.00	837.25 N	971.64 W	1282.49	2.394
6709.07	87.700	304.600	5482.59	855.72 N	997.49 W	1314.17	9.880
6740.98	87.900	304.600	5483.81	873.83 N	1023.74 W	1345.91	0.627
6772.03	90.100	305.300	5484.35	891.61 N	1049.18 W	1376.84	7.435
6803.18	90.600	305.600	5484.16	909.68 N	1074.56 W	1407.89	1.872
6835.06	92.500	303.700	5483.30	927.79 N	1100.77 W	1439.61	8.427
6866.81	92.000	305.400	5482.05	945.79 N	1126.90 W	1471.19	5.577
6898.58	88.000	305.300	5482.05	964.16 N	1152.81 W	1502.85	12.595
6930.33	87.100	304.200	5483.41	982.24 N	1178.87 W	1534.44	4.474
6962.13	87.900	304.600	5484.80	1000.19 N	1205.08 W	1566.06	2.812
6993.88	88.500	305.100	5485.80	1018.33 N	1231.12 W	1597.66	2.459
7025.73	88.700	307.900	5486.57	1037.26 N	1256.72 W	1629.44	8.811
7056.70	89.300	308.900	5487.12	1056.50 N	1280.98 W	1660.39	3.765
7088.45	91.100	310.700	5487.00	1076.82 N	1305.38 W	1692.14	8.017
7120.10	93.500	311.200	5485.73	1097.54 N	1329.26 W	1723.76	7.745
7151.10	92.500	311.900	5484.11	1118.08 N	1352.43 W	1754.70	3.936
7182.82	91.100	312.300	5483.12	1139.33 N	1375.95 W	1786.39	4.590
7214.56	90.800	312.500	5482.59	1160.73 N	1399.38 W	1818.09	1.136
7246.29	90.400	313.000	5482.26	1182.27 N	1422.68 W	1849.79	2.018
7278.03	91.400	311.900	5481.76	1203.69 N	1446.10 W	1881.49	4.683
7309.87	92.100	311.900	5480.79	1224.94 N	1469.79 W	1913.30	2.198
7341.63	92.500	311.400	5479.51	1246.03 N	1493.50 W	1945.02	2.015
7372.55	93.200	311.800	5477.97	1266.53 N	1516.59 W	1975.89	2.607
7404.31	88.400	310.000	5477.53	1287.32 N	1540.59 W	2007.63	16.140
7436.06	87.000	309.100	5478.81	1307.52 N	1565.05 W	2039.36	5.241
7467.81	88.000	308.900	5480.19	1327.48 N	1589.70 W	2071.07	3.212
7499.54	88.400	308.600	5481.19	1347.33 N	1614.43 W	2102.78	1.576
7531.33	89.400	308.900	5481.80	1367.23 N	1639.22 W	2134.55	3.284
7563.10	90.100	308.600	5481.94	1387.16 N	1663.96 W	2166.32	2.226
7594.88	90.600	308.600	5481.74	1407.02 N	1688.76 W	2198.09	1.696
7626.52	90.500	308.600	5481.44	1426.76 N	1713.49 W	2229.72	0.316
7658.37	89.700	308.400	5481.38	1446.59 N	1738.42 W	2261.55	2.589
7690.21	90.000	308.600	5481.47	1466.41 N	1763.33 W	2293.38	1.132
7721.96	89.900	308.600	5481.49	1486.22 N	1788.15 W	2325.12	0.315
7753.14	90.300	307.500	5481.44	1505.44 N	1812.70 W	2356.29	3.754
7784.97	90.800	307.900	5481.13	1524.90 N	1837.86 W	2388.09	2.012
7815.92	90.500	308.900	5480.78	1544.12 N	1862.14 W	2419.02	3.373

Continued...

Sperry-Sun Drilling Services

Survey Report for RU 18-13

Mobil **Utah**
San Juan County **Ratherford Unit**

Measured Depth (ft)	Incl.	Azim.	Vertical Depth (ft)	Northings (ft)	Eastings (ft)	Vertical Section (ft)	Dogleg Rate (°/100ft)
7847.65	90.900	309.100	5480.39	1564.09 N	1886.79 W	2450.75	1.409
7878.58	91.100	309.500	5479.85	1583.68 N	1910.73 W	2481.67	1.446
7909.53	90.200	309.100	5479.50	1603.28 N	1934.67 W	2512.61	3.182
7941.33	88.900	307.700	5479.75	1623.03 N	1959.59 W	2544.40	6.008
7973.17	90.200	309.500	5480.00	1642.89 N	1984.47 W	2576.23	6.973
8005.02	89.700	309.300	5480.03	1663.11 N	2009.09 W	2608.08	1.691
8036.80	89.800	309.100	5480.17	1683.19 N	2033.71 W	2639.85	0.704
8067.90	89.500	309.300	5480.36	1702.85 N	2057.81 W	2670.95	1.159
8098.95	89.800	309.100	5480.55	1722.47 N	2081.88 W	2701.99	1.161
8129.90	90.600	309.100	5480.44	1741.99 N	2105.89 W	2732.94	2.585
8161.60	89.200	308.200	5480.50	1761.79 N	2130.65 W	2764.63	5.250
8193.35	88.200	307.700	5481.22	1781.31 N	2155.68 W	2796.35	3.521
8225.10	88.300	308.100	5482.19	1800.81 N	2180.72 W	2828.06	1.298
8256.98	88.600	307.700	5483.05	1820.38 N	2205.87 W	2859.91	1.568
8288.76	89.000	308.200	5483.71	1839.92 N	2230.92 W	2891.66	2.015
8320.52	89.900	308.400	5484.02	1859.60 N	2255.84 W	2923.41	2.903
8369.00	91.200	308.900	5483.55	1889.88 N	2293.70 W	2971.87	2.873
8400.00	91.200	308.900	5482.90	1909.34 N	2317.82 W	3002.86	0.000

All data is in feet unless otherwise stated. Directions and coordinates are relative to True North.
Vertical depths are relative to Well. Northings and Eastings are relative to Well.

The Dogleg Severity is in Degrees per 100ft.
Vertical Section is from Well and calculated along an Azimuth of 310.000° (True).

Based upon Minimum Curvature type calculations, at a Measured Depth of 8400.00ft.,
The Bottom Hole Displacement is 3002.98ft., in the Direction of 309.481° (True).

ExxonMobil Production Compa.
U.S. West
P.O. Box 4358
Houston, Texas 77210-4358

June 27, 2001

ExxonMobil
Production

Mr. Jim Thompson
State of Utah, Division of Oil, Gas and Mining
1549 West North Temple
Suite 1210
Salt Lake City, UT 84114-5801

Change of Name – Mobil Oil Corporation to
ExxonMobil Oil Corporation

Dear Mr. Thompson

Effective June 1, 2001, Mobil Oil Corporation (MOC) changed its name to ExxonMobil Oil Corporation (EMOC). This was a name change only; EMOC is the same corporation as Mobil Oil Corporation, but with a new name. No facility or other asset was transferred from one corporation to another by virtue of the name change. Specifically, EMOC will remain the owner and operator of its existing exploration and production oil and gas properties and facilities, as well as relevant permits.

There is no change to the name of Exxon Mobil Corporation, the ultimate shareholder of EMOC.

Please note the change of name of MOC to ExxonMobil Oil Corporation in your records pertaining to any MOC permits.

The Federal Identification Number for MOC (13-5401570) will remain the same for EMOC.

A copy of the Certification, Bond Rider and a list of wells are attached.

If you have any questions please feel free to call Joel Talavera at 713-431-1010

Very truly yours,

Charlotte H. Harper

Charlotte H. Harper
Permitting Supervisor

ExxonMobil Production Company
a division of Exxon Mobil Corporation,
acting for ExxonMobil Oil Corporation

RECEIVED
DIVISION OF
OIL, GAS AND MINING

United States Department of the Interior

BUREAU OF INDIAN AFFAIRS
XXXXXXXXXXXXXXXX
Navajo Area Office
NAVAJO REGION
P.O. Box 1060
Gallup, New Mexico 87305-1060

IN REPLY REFER TO:

RRES/543

AUG 30 2001

CERTIFIED MAIL - RETURN RECEIPT REQUESTED

Charlotte H. Harper, Permitting Supervisor
Exxon Mobil Production Company
U. S. West
P. O. Box 4358
Houston, TX 77210-4358

Dear Ms. Harper:

This is to acknowledge receipt of your company's name change from Mobil Oil Corporation to ExxonMobil Oil Corporation effective June 1, 2001. The receipt of documents includes the Name Change Certification, current listing of Officers and Directors, Listing of Leases, Financial Statement, filing fees of $75.00 and a copy of the Rider for Bond Number 8027 31 97. There are no other changes.

Please note that we will provide copies of these documents to other concerned parties. If you need further assistance, you may contact Ms. Bertha Spencer, Realty Specialist, at (928) 871-5938.

Sincerely,

GENNI DENETSONE

Regional Realty Officer

cc: BLM, Farmington Field Office w/enclosures
Navajo Nation Minerals Office, Attn: Mr. Akhtar Zaman, Director/w enclosures

MINERAL RESOURCES
ADM 1 BLM
NATV AM MIN COORD
SOLID MIN TEAM
PETRO MGMT TEAM 2
O & G INSPECT TEAM
ALL TEAM LEADERS
LAND RESOURCES
ENVIRONMENT
FILES

ExxonMobil Production Company
U.S. West
P.O. Box 4358
Houston, Texas 77210-4358

PBR 7/12/2001

543

File

June 27, 2001

ExxonMobil Production

Certified Mail
Return Receipt Requested

RECEIVED #477 JUL 9 - 2001 Navajo Region Office RES - Minerals Section

Ms. Genni Denetsone
United States Department of the Interior
Bureau of Indian Affairs, Navajo Region
Real Estate Services
P. O. Box 1060
Gallup, New Mexico 87305-1060
Mail Code 543

Change of Name –
Mobil Oil Corporation to
ExxonMobil Oil Corporation

Dear Ms. Denetsone:

Effective June 1, 2001, Mobil Oil Corporation (MOC) changed its name to ExxonMobil Oil Corporation (EMOC). This was a name change only; EMOC is the same corporation as Mobil Oil Corporation, but with a new name. No facility or other asset was transferred from one corporation to another by virtue of the name change. Specifically, EMOC will remain the owner and operator of its existing exploration and production oil and gas properties and facilities, as well as relevant permits.

There is no change to the name of Exxon Mobil Corporation, the ultimate shareholder of EMOC.

Please note the change of name of MOC to ExxonMobil Oil Corporation in your records pertaining to any MOC permits.

The Federal Identification Number for MOC (13-5401570) will remain the same for EMOC.

Attached is the Name Change Certification, Current listing of Officers and Directors, Filing Fee of $75/-, Listing of Leases, Financial Statement and a copy of the Rider for Bond number 8027 31 97. The original Bond Rider has been sent to Ms. Barbar Davis at your Washington Office.

If you have any questions , please contact Alex Correa at (713) 431-1012.

Very truly yours,

Charlotte H. Harper

Charlotte H. Harper
Permitting Supervisor

Attachments

RECEIVED JUL 05 2001 NAVAJO REGION OFFICE BRANCH OF REAL ESTATE SERVICES

ExxonMobil Production Company
a division of Exxon Mobil Corporation,
acting for ExxonMobil Oil Corporation

NOTE: Check forwarded to Ella Jossie

Bureau of Indian Affairs
Navajo Region Office
Attn: RRES - Mineral and Mining Section
P.O. Box 1060
Gallup, New Mexico 87305-1060

Gentlemen:

The current listing of officers and director of ExxonMobil Oil Corporation (Name of Corporation), of New York (State) is as follows:

OFFICERS

President	F.A. Risch	Address 5959 Las Colinas Blvd. Irving, TX 75039
Vice President	K.T. Koonce	Address 800 Bell Street Houston, TX 77002
Secretary	F.L. Reid	Address 5959 Las Colinas Blvd. Irving, TX 75039
Treasure	B.A. Maher	Address 5959 Las Colinas Blvd. Irving, TX 75039

DIRECTORS

Name	D.D. Humphreys	Address 5959 Las Colinas Blvd. Irving, TX 75039
Name	P.A. Hanson	Address 5959 Las Colinas Blvd. Irving, TX 75039
Name	T.P. Townsend	Address 5959 Las Colinas Blvd. Irving, TX 75039
Name	B.A. Maher	Address 5959 Las Colinas Blvd. Irving, TX 75039
Name	F.A. Risch	Address 5959 Las Colinas Blvd. Irving, TX 75039

Sincerely,

Alex Correa

This is to certify that the above information pertaining to ExxonMobil Oil Corporation (Corporation) is trust and correct as evidenced by the records and accounts covering business for the State of Utah and in the custody of Corporation Service Company (Agent), Phone: 1 (800)927-9800, whose business address is One Utah Center, 201 South Main Street, Salt Lake City, Utah 84111-2218

(CORPORATE SEAL)

Signature

AGENT AND ATTORNEY IN FACT

Title

SAL

CERTIFICATION

I, the undersigned Assistant Secretary of ExxonMobil Oil Corporation. (formerly Mobil Oil Corporation), a corporation organized and existing under the laws of the State of New York, United States of America, DO HEREBY CERTIFY, That, the following is a true and exact copy of the resolutions adopted by the Board of Directors on May 22, 2001:

CHANGE OF COMPANY NAME

WHEREAS, the undersigned Directors of the Corporation deem it to be in the best interest of the Corporation to amend the Certificate of Incorporation of the Corporation to change the name and principal office of the Corporation:

NOW THEREFORE BE IT RESOLVED, That Article 1st relating to the corporate name is hereby amended to read as follows:

"1st The corporate name of said Company shall be,

ExxonMobil Oil Corporation",

FURTHER RESOLVED, That the amendment of the Corporation's Certificate of Incorporation referred to in the preceding resolutions be submitted to the sole shareholder of the Corporation entitled to vote thereon for its approval and, if such shareholder gives its written consent, pursuant to Section 803 of the Business Corporation Law of the State of New York, approving such amendment, the proper officers of the Corporation be, and they hereby are, authorized to execute in the name of the Corporation the Certificate of Amendment of Certificate of Incorporation, in the form attached hereto;

FURTHER RESOLVED, That the proper officers of the Corporation be and they hereby are authorized and directed to deliver, file and record in its behalf, the Certificate of Amendment of Certificate of Incorporation, and to take such action as may be deemed necessary or advisable to confirm and make effective in all respects the change of this Company's name to EXXONMOBIL OIL CORPORATION.

WITNESS, my hand and the seal of the Corporation at Irving, Texas, this 8th day of June, 2001.

S. A. Millican
Assistant Secretary

COUNTY OF DALLAS)
STATE OF TEXAS)
UNITED STATES OF AMERICA)
Sworn to and subscribed before me at Irving, Texas, U. S. A. on this the 8th day of June, 2001.

Janice M. Phillips
Notary Public

LISTING OF LEASES OF MOBIL OIL CORPORATION

	Lease Number
1)	14-20-0603-6504
2)	14-20-0603-6505
3)	14-20-0603-6506
4)	14-20-0603-6508
5)	14-20-0603-6509
6)	14-20-0603-6510
7)	14-20-0603-7171
8)	14-20-0603-7172A
9)	14-20-600-3530
10)	14-20-603-359
11)	14-20-603-368
12)	14-20-603-370
13)	14-20-603-370A
14)	14-20-603-372
15)	14-20-603-372A
16)	14-20-603-4495
17)	14-20-603-5447
18)	14-20-603-5448
19)	14-20-603-5449
20)	14-20-603-5450
21)	14-20-603-5451

6/1/01

CHUBB GROUP OF INSURANCE COMPANIES

[illegible] South, Suite [illegible], Houston, Texas [illegible]
[illegible] (713) 937-4600 • Facsimile: (713) 297-4759

New Bond

FEDERAL INSURANCE COMPANY RIDER
to be attached to and form a part of

BOND NO 8027 31 97
wherein
Mobil Oil Corporation and Mobil Exploration and Producing U.S., Inc. is named as Principal and

FEDERAL INSURANCE COMPANY AS SURETY,

in favor of **United States of America, Department of the Interior Bureau of Indian Affairs**

in the amount of **$150,000.00**
bond date: 11/01/65

IT IS HEREBY UNDERSTOOD AND AGREED THAT effective **June 1, 2001** the name of the Principal is changed

FROM: **Mobil Oil Corporation and Mobil Exploration and Producing U.S., Inc.**

TO : **ExxonMobil Oil Corporation**

All other terms and conditions of this Bond are unchanged.

Signed, sealed and dated this 12th of June, 2001.

ExxonMobil Oil Corporation
By :

FEDERAL INSURANCE COMPANY
By: Mary Pierson
Mary Pierson, Attorney-in-fact

Chubb Surety

POWER OF ATTORNEY

Federal Insurance Company
Vigilant Insurance Company
Pacific Indemnity Company

Attn.: Surety Department
15 Mountain View Road
Warren, NJ 07059

Know All by These Presents, That **FEDERAL INSURANCE COMPANY,** an Indiana corporation, **VIGILANT INSURANCE COMPANY,** a New York corporation, and **PACIFIC INDEMNITY COMPANY,** a Wisconsin corporation, do each hereby constitute and appoint R.F. Bobo, Mary Pierson, Philana Berros, and Jody E. Specht of Houston, Texas----------

each as their true and lawful Attorney-in-Fact to execute under such designation in their names and to affix their corporate seals to and deliver for and on their behalf as surety thereon or otherwise, bonds and undertakings and other writings obligatory in the nature thereof (other than bail bonds) given or executed in the course of business, and any instruments amending or altering the same, and consents to the modification or alteration of any instrument referred to in said bonds or obligations.

In Witness Whereof, said **FEDERAL INSURANCE COMPANY, VIGILANT INSURANCE COMPANY,** and **PACIFIC INDEMNITY COMPANY** have each executed and attested these presents and affixed their corporate seals on this 10th day of May, 2001.

Kenneth C. Wendel, Assistant Secretary

Frank E. Robertson, Vice President

STATE OF NEW JERSEY
County of Somerset } ss.

On this 10th day of May, 2001, before me, a Notary Public of New Jersey, personally came Kenneth C. Wendel, to me known to be Assistant Secretary of FEDERAL INSURANCE COMPANY, VIGILANT INSURANCE COMPANY, and PACIFIC INDEMNITY COMPANY, the companies which executed the foregoing Power of Attorney, and the said Kenneth C. Wendel being by me duly sworn, did depose and say that he is Assistant Secretary of FEDERAL INSURANCE COMPANY, VIGILANT INSURANCE COMPANY, and PACIFIC INDEMNITY COMPANY and knows the corporate seals thereof, that the seals affixed to the foregoing Power of Attorney are such corporate seals and were thereto affixed by authority of the By-Laws of said Companies; and that he signed said Power of Attorney as Assistant Secretary of said Companies by like authority; and that he is acquainted with Frank E. Robertson, and knows him to be Vice President of said Companies; and that the signature of Frank E. Robertson, subscribed to said Power of Attorney is in the genuine handwriting of Frank E. Robertson, and that the signature thereto subscribed by authority of said Boards is deponent's presence.

Karen A. Price

Notarial Seal

KAREN A. PRICE NOTARY PUBLIC NEW JERSEY

Notary Public State of New Jersey
No. 2231647
Commission Expires Oct. 28, 2004

Karen A Price
Notary Public

CERTIFICATION

Extract from the By-Laws of FEDERAL INSURANCE COMPANY, VIGILANT INSURANCE COMPANY, and PACIFIC INDEMNITY COMPANY:

"All powers of attorney for and on behalf of the Company may and shall be executed in the name and on behalf of the Company, either by the Chairman or the President or a Vice President or an Assistant Vice President, jointly with the Secretary or an Assistant Secretary, under their respective designations. The signature of such officers may be engraved, printed or lithographed. The signature of each of the following officers: Chairman, President, any Vice President, any Assistant Vice President, any Secretary, any Assistant Secretary and the seal of the Company may be affixed by facsimile to any power of attorney or to any certificate relating thereto appointing Assistant Secretaries or Attorneys-in-Fact for purposes only of executing and attesting bonds and undertakings and other writings obligatory in the nature thereof, and any such power of attorney or certificate bearing such facsimile signature or facsimile seal shall be valid and binding upon the Company and any such power so executed and certified by such facsimile signature and facsimile seal shall be valid and binding upon the Company with respect to any bond or undertaking to which it is attached."

I, Kenneth C. Wendel, Assistant Secretary of FEDERAL INSURANCE COMPANY, VIGILANT INSURANCE COMPANY, and PACIFIC INDEMNITY COMPANY (the "Companies") do hereby certify that

(i) the foregoing extract of the By-Laws of the Companies is true and correct,
(ii) the Companies are duly licensed and authorized to transact surety business in all 50 of the United States of America and the District of Columbia and are authorized by the U. S. Treasury Department; further, Federal and Vigilant are licensed in Puerto Rico and the U. S. Virgin Islands, and Federal is licensed in American Samoa, Guam, and each of the Provinces of Canada except Prince Edward Island; and
(iii) the foregoing Power of Attorney is true, correct and in full force and effect.

Given under my hand and seals of said Companies at Warren, NJ this 12th day of June, 2001.

FEDERAL INSURANCE COMPANY · INDIANA

PACIFIC INDEMNITY COMPANY · INCORPORATED · FEB. 16, 1925 · WISCONSIN

VIGILANT INSURANCE COMPANY · NEW YORK

Kenneth C. Wendel, Assistant Secretary

IN THE EVENT YOU WISH TO NOTIFY US OF A CLAIM, VERIFY THE AUTHENTICITY OF THIS BOND OR NOTIFY US OF ANY OTHER MATTER, PLEASE CONTACT US AT ADDRESS LISTED ABOVE, OR BY
Telephone (908) 903-3485 Fax (908) 903-3656 e-mail: surety@chubb.com

15-10-0225 (Ed. 4-99) CONSENT

F010601000187

CSC 45

CERTIFICATE OF AMENDMENT

OF

CERTIFICATE OF INCORPORATION

OF

MOBIL OIL CORPORATION

(Under Section 805 of the Business Corporation Law)

Pursuant to the provisions of Section 805 of the Business Corporation Law, the undersigned President and Secretary, respectively, of Mobil Oil Corporation hereby certify:

FIRST: That the name of the corporation is MOBIL OIL CORPORATION and that said corporation was incorporated under the name of Standard Oil Company of New York.

SECOND: That the Certificate of Incorporation of the corporation was filed by the Department of State, Albany, New York, on the 10th day of August, 1882.

THIRD: That the amendments to the Certificate of Incorporation effected by this Certificate are as follows:

(a) Article 1st of the Certificate of Incorporation, relating to the corporate name, is hereby amended to read as follows:

"1st The corporate name of said Company shall be,

ExxonMobil Oil Corporation",

(b) Article 7th of the Certificate of Incorporation, relating to the office of the corporation is hereby amended to read as follows:

The office of the corporation within the State of New York is to be located in the County of Albany. The Company shall have offices at such other places as the Board of Directors may from time to time determine.

FOURTH: That the amendments to the Certificate of Incorporation were authorized by the Board of Directors followed by the holder of all outstanding shares entitled to vote on amendments to the Certificate of Incorporation by written consent of the sole shareholder dated May 22, 2001.

IN WITNESS WHEREOF, this Certificate has been signed this 22nd Day of May, 2001.

F. A. Risch, President

STATE OF TEXAS)
COUNTY OF DALLAS)

F. L. REID, being duly sworn, deposes and says that he is the Secretary of MOBIL OIL CORPORATION, the corporation mentioned and described in the foregoing instrument; that he has read and signed the same and that the statements contained therein are true.

F. L. REID, Secretary

SUBSCRIBED AND SWORN TO before me, the undersigned authority, on this the 22nd day of May, 2001.

[SEAL]

NOTARY PUBLIC, STATE OF TEXAS

JANICE M. PHILLIPS
MY COMMISSION EXPIRES
May 16, 2002

F010601000187

CSC 45

CERTIFICATE OF AMENDMENT

OF

MOBIL OIL CORPORATION

Under Section 805 of the Business Corporation Law

SAC

100 cc

STATE OF NEW YORK
DEPARTMENT OF STATE
FILED JUN 01 2001
TAX $
BY: SAC
NY | Albany

Filed by: EXXONMOBIL CORPORATION
(Name)

5959 Las Colinas Blvd.
(Mailing address)

Irving, TX 75039-2298
(City, State and Zip code)

Cust Ref # 165578MPJ

RECEIVED
JUL 05 2001
CORPORATIONS BUREAU
DIVISION OF REAL ESTATE SERVICES

010601000195

State of New York }
Department of State } *ss:*

I hereby certify that the annexed copy has been compared with the original document in the custody of the Secretary of State and that the same is a true copy of said original.

Witness my hand and seal of the Department of State on JUN 01 2001

Special Deputy Secretary of State

DOS-1266 (7/00)

Division of Oil, Gas and Mining

OPERATOR CHANGE WORKSHEET

ROUTING
1. GLH
2. CDW ✓
3. FILE

Change of Operator (Well Sold) — Designation of Agent

X Operator Name Change — Merger

The operator of the well(s) listed below has changed, effective: **06-01-2001**

FROM: (Old Operator):	**TO:** (New Operator):
MOBIL EXPLORATION & PRODUCTION	EXXONMOBIL OIL CORPORATION
Address: P O BOX DRAWER "G"	Address: U S WEST P O BOX 4358
CORTEZ, CO 81321	HOUSTON, TX 77210-4358
Phone: 1-(970)-564-5212	Phone: 1-(713)-431-1010
Account No. N7370	Account No. N1855

CA No. **Unit:** **RATHERFORD**

WELL(S)

NAME	SEC TWN RNG	API NO	ENTITY NO	LEASE TYPE	WELL TYPE	WELL STATUS
RATHERFORD UNIT 17-33	17-41S-24E	43-037-31134	6280	INDIAN	OW	P
RATHERFORD UNIT 17-11	17-41S-24E	43-037-31169	6280	INDIAN	OW	S
RATHERFORD UNIT 17-22	17-41S-24E	43-037-31170	6280	INDIAN	OW	P
RATHERFORD UNIT 17-42	17-41S-24E	43-037-31177	6280	INDIAN	OW	P
RATHERFORD UNIT 17-31	17-41S-24E	43-037-31178	6280	INDIAN	OW	P
18-11	18-41S-24E	43-037-15733	6280	INDIAN	OW	P
RATHERFORD 18-13	18-41S-24E	43-037-15734	6280	INDIAN	OW	P
RATHERFORD UNIT 18-44	18-41S-24E	43-037-31045	6280	INDIAN	OW	P
RATHERFORD UNIT 18-24	18-41S-24E	43-037-31079	6280	INDIAN	OW	P
RATHERFORD UNIT 18-33	18-41S-24E	43-037-31135	6280	INDIAN	OW	P
RATHERFORD UNIT 18-31	18-41S-24E	43-037-31181	6280	INDIAN	OW	P
RATHERFORD UNIT 18-42	18-41S-24E	43-037-31182	6280	INDIAN	OW	P
RATHERFORD UNIT 18-22	18-41S-24E	43-037-31236	6280	INDIAN	OW	P
19-42	19-41S-24E	43-037-30916	6280	INDIAN	OW	P
RATHERFORD UNIT 19-22	19-41S-24E	43-037-31046	6280	INDIAN	OW	P
RATHERFORD UNIT 19-31	19-41S-24E	43-037-31047	6280	INDIAN	OW	P
RATHERFORD UNIT 19-33	19-41S-24E	43-037-31048	6280	INDIAN	OW	P
RATHERFORD UNIT 19-11	19-41S-24E	43-037-31080	6280	INDIAN	OW	P
RATHERFORD UNIT 19-44	19-41S-24E	43-037-31081	6280	INDIAN	OW	P
RATHERFORD 19-97	19-41S-24E	43-037-31596	6280	INDIAN	OW	P

OPERATOR CHANGES DOCUMENTATION

Enter date after each listed item is completed

1. (R649-8-10) Sundry or legal documentation was received from the **FORMER** operator on: 06/29/2001
2. (R649-8-10) Sundry or legal documentation was received from the **NEW** operator on: 06/29/2001
3. The new company has been checked through the **Department of Commerce, Division of Corporations Database on:** 04/09/2002
4. Is the new operator registered in the State of Utah: YES Business Number: 579865-0143
5. If **NO**, the operator was contacted contacted on: N/A

6. **Federal and Indian Lease Wells:** The BLM and or the BIA has approved the merger, name change, or operator change for all wells listed on Federal or Indian leases on: BIA-06/01/01

7. **Federal and Indian Units:**
The BLM or BIA has approved the successor of unit operator for wells listed on: 06/01/2001

8. **Federal and Indian Communization Agreements ("CA"):**
The BLM or BIA has approved the operator for all wells listed within a CA on: N/A

9. **Underground Injection Control ("UIC")** The Division has approved UIC Form 5, **Transfer of Authority to Inject,** for the enhanced/secondary recovery unit/project for the water disposal well(s) listed on: N/A

DATA ENTRY:

1. Changes entered in the **Oil and Gas Database on:** 04/15/2002
2. Changes have been entered on the **Monthly Operator Change Spread Sheet on:** 04/15/2002
3. Bond information entered in RBDMS on: N/A
4. Fee wells attached to bond in RBDMS on: N/A

STATE WELL(S) BOND VERIFICATION:

1. State well(s) covered by Bond Number: N/A

FEDERAL WELL(S) BOND VERIFICATION:

1. Federal well(s) covered by Bond Number: N/A

INDIAN WELL(S) BOND VERIFICATION:

1. Indian well(s) covered by Bond Number: 80273197

FEE WELL(S) BOND VERIFICATION:

1. (R649-3-1) The **NEW** operator of any fee well(s) listed covered by Bond Number N/A
2. The **FORMER** operator has requested a release of liability from their bond on: N/A
The Division sent response by letter on: N/A

LEASE INTEREST OWNER NOTIFICATION:

3. (R649-2-10) The **FORMER** operator of the fee wells has been contacted and informed by a letter from the Division of their responsibility to notify all interest owners of this change on: N/A

COMMENTS:

Division of Oil, Gas and Mining

OPERATOR CHANGE WORKSHEET

ROUTING
1. DJJ
2. CDW

X Change of Operator (Well Sold) Operator Name Change/Merger

The operator of the well(s) listed below has changed, effective: **6/1/2006**

FROM: (Old Operator):	**TO:** (New Operator):
N1855-ExxonMobil Oil Corporation PO Box 4358 Houston, TX 77210-4358	N2700-Resolute Natural Resources Company 1675 Broadway, Suite 1950 Denver, CO 80202
Phone: 1 (281) 654-1936	Phone: 1 (303) 534-4600

CA No. **Unit:** **RATHERFORD**

OPERATOR CHANGES DOCUMENTATION

Enter date after each listed item is completed

1. (R649-8-10) Sundry or legal documentation was received from the **FORMER** operator on: 4/21/2006
2. (R649-8-10) Sundry or legal documentation was received from the **NEW** operator on: 4/24/2006
3. The new company was checked on the **Department of Commerce, Division of Corporations Database on:** 6/7/2006
4. Is the new operator registered in the State of Utah: YES Business Number: 5733505-0143
5. If **NO**, the operator was contacted contacted on:

6a. (R649-9-2)Waste Management Plan has been received on: requested

6b. Inspections of LA PA state/fee well sites complete on: n/a

6c. Reports current for Production/Disposition & Sundries on: ok

7. **Federal and Indian Lease Wells:** The BLM and or the BIA has approved the merger, name change, or operator change for all wells listed on Federal or Indian leases on: BLM n/a BIA not yet
8. **Federal and Indian Units:**
   The BLM or BIA has approved the successor of unit operator for wells listed on: not yet
9. **Federal and Indian Communization Agreements ("CA"):**
   The BLM or BIA has approved the operator for all wells listed within a CA on: n/a
10. **Underground Injection Control ("UIC")** The Division has approved UIC Form 5, **Transfer of Authority to Inject,** for the enhanced/secondary recovery unit/project for the water disposal well(s) listed on: 6/12/2006

DATA ENTRY:

1. Changes entered in the **Oil and Gas Database on:** 6/22/2006
2. Changes have been entered on the **Monthly Operator Change Spread Sheet on:** 6/22/2006
3. Bond information entered in RBDMS on: n/a
4. Fee/State wells attached to bond in RBDMS on: n/a
5. Injection Projects to new operator in RBDMS on: 6/22/2006
6. Receipt of Acceptance of Drilling Procedures for APD/New on: n/a

BOND VERIFICATION:

1. Federal well(s) covered by Bond Number: n/a
2. Indian well(s) covered by Bond Number: PA002769
3. (R649-3-1) The **NEW** operator of any fee well(s) listed covered by Bond Number n/a

a. The **FORMER** operator has requested a release of liability from their bond on: n/a
The Division sent response by letter on: n/a

LEASE INTEREST OWNER NOTIFICATION:

4. (R649-2-10) The **FORMER** operator of the fee wells has been contacted and informed by a letter from the Division of their responsibility to notify all interest owners of this change on: n/a

COMMENTS:

FORM 9

STATE OF UTAH
DEPARTMENT OF NATURAL RESOURCES
DIVISION OF OIL, GAS AND MINING

SUNDRY NOTICES AND REPORTS ON WELLS

Do not use this form for proposals to drill new wells, significantly deepen existing wells below current bottom-hole depth, reenter plugged wells, or to drill horizontal laterals. Use APPLICATION FOR PERMIT TO DRILL form for such proposals.

5. LEASE DESIGNATION AND SERIAL NUMBER: See attached list
6. IF INDIAN, ALLOTTEE OR TRIBE NAME: Navajo Tribe
7. UNIT or CA AGREEMENT NAME: Ratherford Unit
8. WELL NAME and NUMBER: See attached list
9. API NUMBER: Attached
10. FIELD AND POOL, OR WILDCAT: Greater Aneth

1. TYPE OF WELL: OIL WELL ☐ GAS WELL ☐ OTHER Unit Agreement

2. NAME OF OPERATOR: Resolute Natural Resources Company N2700

3. ADDRESS OF OPERATOR: 1675 Broadway, Suite 1950 CITY Denver STATE CO ZIP 80202 PHONE NUMBER: (303) 534-4600

4. LOCATION OF WELL
FOOTAGES AT SURFACE: See attached list COUNTY: San Juan
QTR/QTR, SECTION, TOWNSHIP, RANGE, MERIDIAN: STATE: UTAH

11. CHECK APPROPRIATE BOXES TO INDICATE NATURE OF NOTICE, REPORT, OR OTHER DATA

TYPE OF SUBMISSION	TYPE OF ACTION		
☐ NOTICE OF INTENT (Submit in Duplicate)	☐ ACIDIZE	☐ DEEPEN	☐ REPERFORATE CURRENT FORMATION
Approximate date work will start:	☐ ALTER CASING	☐ FRACTURE TREAT	☐ SIDETRACK TO REPAIR WELL
	☐ CASING REPAIR	☐ NEW CONSTRUCTION	☐ TEMPORARILY ABANDON
	☐ CHANGE TO PREVIOUS PLANS	☑ OPERATOR CHANGE	☐ TUBING REPAIR
	☐ CHANGE TUBING	☐ PLUG AND ABANDON	☐ VENT OR FLARE
☑ SUBSEQUENT REPORT (Submit Original Form Only)	☐ CHANGE WELL NAME	☐ PLUG BACK	☐ WATER DISPOSAL
Date of work completion:	☐ CHANGE WELL STATUS	☐ PRODUCTION (START/RESUME)	☐ WATER SHUT-OFF
	☐ COMMINGLE PRODUCING FORMATIONS	☐ RECLAMATION OF WELL SITE	☐ OTHER:
	☐ CONVERT WELL TYPE	☐ RECOMPLETE - DIFFERENT FORMATION	

12. DESCRIBE PROPOSED OR COMPLETED OPERATIONS. Clearly show all pertinent details including dates, depths, volumes, etc.

Effective June 1, 2006 Exxon Mobil Oil Corporation resigns as operator of the Ratherford Unit. Also effective June 1, 2006 Resolute Natural Resources Company is designated as successor operator of the Ratherford Unit.

A list of affected producing and water source wells is attached. A separate of affected injection wells is being submitted with UIC Form 5, Transfer of Authority to Inject.

As of the effective date, bond coverage for the affected wells will transfer to BIA Bond # PA002769.

NAME (PLEASE PRINT) Dwight E Mallory TITLE Regulatory Coordinator
SIGNATURE Dwt E Mallory DATE 4/20/2006

(This space for State use only)

APPROVED 6/27/06
Earlene Russell
Division of Oil, Gas and Mining
Earlene Russell, Engineering Technician

RECEIVED
APR 24 2006
DIV. OF OIL, GAS & MINING

(5/2000) (See Instructions on Reverse Side)

FORM 9

STATE OF UTAH
DEPARTMENT OF NATURAL RESOURCES
DIVISION OF OIL, GAS AND MINING

5. LEASE DESIGNATION AND SERIAL NUMBER:

SUNDRY NOTICES AND REPORTS ON WELLS

6. IF INDIAN, ALLOTTEE OR TRIBE NAME: Ship Rock

7. UNIT or CA AGREEMENT NAME: UTU68931A

Do not use this form for proposals to drill new wells, significantly deepen existing wells below current bottom-hole depth, reenter plugged wells, or to drill horizontal laterals. Use APPLICATION FOR PERMIT TO DRILL form for such proposals.

1. TYPE OF WELL: OIL WELL ☑ GAS WELL ☐ OTHER

8. WELL NAME and NUMBER: Ratherford

2. NAME OF OPERATOR: ExxonMobil Oil Corporation N1855

9. API NUMBER: attached

3. ADDRESS OF OPERATOR: P.O. Box 4358 CITY Houston STATE TX ZIP 77210-4358 PHONE NUMBER: (281) 654-1936

10. FIELD AND POOL, OR WILDCAT: Aneth

4. LOCATION OF WELL

FOOTAGES AT SURFACE:

COUNTY: San Juan

QTR/QTR, SECTION, TOWNSHIP, RANGE, MERIDIAN:

STATE: UTAH

11. CHECK APPROPRIATE BOXES TO INDICATE NATURE OF NOTICE, REPORT, OR OTHER DATA

TYPE OF SUBMISSION	TYPE OF ACTION		
☑ NOTICE OF INTENT (Submit in Duplicate)	☐ ACIDIZE	☐ DEEPEN	☐ REPERFORATE CURRENT FORMATION
Approximate date work will start: 6/1/2006	☐ ALTER CASING	☐ FRACTURE TREAT	☐ SIDETRACK TO REPAIR WELL
	☐ CASING REPAIR	☐ NEW CONSTRUCTION	☐ TEMPORARILY ABANDON
	☐ CHANGE TO PREVIOUS PLANS	☑ OPERATOR CHANGE	☐ TUBING REPAIR
	☐ CHANGE TUBING	☐ PLUG AND ABANDON	☐ VENT OR FLARE
☐ SUBSEQUENT REPORT (Submit Original Form Only)	☐ CHANGE WELL NAME	☐ PLUG BACK	☐ WATER DISPOSAL
Date of work completion:	☐ CHANGE WELL STATUS	☐ PRODUCTION (START/RESUME)	☐ WATER SHUT-OFF
	☐ COMMINGLE PRODUCING FORMATIONS	☐ RECLAMATION OF WELL SITE	☐ OTHER:
	☐ CONVERT WELL TYPE	☐ RECOMPLETE - DIFFERENT FORMATION	

12. DESCRIBE PROPOSED OR COMPLETED OPERATIONS. Clearly show all pertinent details including dates, depths, volumes, etc.

ExxonMobil Oil Corporation is transferring operatorship of Greater Aneth field, Ratherford lease to Resolute Natural Resources Company. All change of operator notices should be made effective as of 7:00 AM MST on June 1, 2006.

Attached please find a listing of producers and water source wells included in the transfer.

NAME (PLEASE PRINT) Laurie Kilbride TITLE Permitting Supervisor

SIGNATURE Laurie B. Kilbride DATE 4/19/2006

(This space for State use only) APPROVED 6/27/06
Earlene Russell
Division of Oil, Gas and Mining
Earlene Russell, Engineering Technician

RECEIVED
APR 21 2006
DIV. OF OIL, GAS & MINING

(See Instructions on Reverse Side)

(5/2000)

Ratherford Unit - Producer Well List

minus P&A's

Lease	Number	API #	Status	Lease #	Location					
					Sec	T	R	QTR/QTR	NSFoot	EWFoot
Ratherford	01-14	430373116200S1	Producing	1420603246A	1	41S	23E	SWSW	0660FSL	0660FWL
Ratherford	01-34	430371638501S1	SI	1420603246A	1	41S	23E	SWSE	1133FSL	1980FEL
Ratherford	11-41	430373154400S1	Producing	1420603246A	11	41S	23E	NENE	0860FNL	0350FEL
Ratherford	11-43	430373162201S1	Producing	1420603246A	11	41S	23E	NESE	1980FSL	0660FEL
Ratherford	12-12	430373119000S1	Producing	1420603246A	12	41S	23E	SWNW	1850FNL	0660FWL
Ratherford	12-14	430371584400S1	SI	1420603246A	12	41S	23E	SWSW	0660FSL	4622FEL
Ratherford	12-21	430373120100S1	Producing	1420603246A	12	41S	23E	NENW	0660FNL	1980FWL
Ratherford	12-23	430371584601S1	Producing	1420603246A	12	41S	23E	NESW	1958FSL	3300FEL
Ratherford	12-32	430373120300S1	Producing	1420603246A	12	41S	23E	SWNE	1820FNL	1820FEL
Ratherford	12-34	430373112600S1	Producing	1420603246A	12	41S	23E	SWSE	0675FSL	1905FEL
Ratherford	12-43	430373120200S1	SI	1420603246A	12	41S	23E	NESE	2100FSL	0660FEL
Ratherford	13-12	430373112701S1	Producing	1420603247A	13	41S	23E	SWNW	1705FNL	0640FWL
Ratherford	13-14	430373158900S1	Producing	1420603247A	13	41S	23E	SWSW	0660FSL	0660FWL
Ratherford	13-21	430373112801S1	SI	1420603247A	13	41S	23E	NENW	0660FNL	1920FWL
Ratherford	13-23	430373112900S1	Producing	1420603247A	13	41S	23E	NESW	1980FSL	1930FWL
Ratherford	13-34	430373113001S1	Producing	1420603247A	13	41S	23E	SWSE	0660FSL	1980FEL
Ratherford	13-41	430371585601S1	Producing	1420603247A	13	41S	23E	NENE	660FNL	660FEL
Ratherford	13-43	430373113100S1	Producing	1420603247A	13	41S	23E	NESE	1700FSL	0960FEL
Ratherford	14-32	430371585801S1	Producing	1420603247A	14	41S	23E	SWNE	2130FNL	1830FEL
Ratherford	14-41	430373162300S1	Producing	1420603247A	14	41S	23E	NENE	0521FNL	0810FEL
Ratherford	24-32	430373159300S1	Producing	1420603247A	24	41S	23E	SWNE	2121FNL	1846FEL
Ratherford	24-41	430373113200S1	Producing	1420603247A	24	41S	23E	NENE	0660FNL	0710FEL
Ratherford	17-11	430373116900S1	Producing	1420603353	17	41S	24E	NWNW	1075FNL	0800FWL
Ratherford	17-13	430373113301S1	Producing	1420603353	17	41S	24E	NWSW	2100FSL	0660FWL
Ratherford	17-22	430373117001S1	Producing	1420603353	17	41S	24E	SENW	1882FNL	1910FWL
Ratherford	17-24	430373104400S1	Producing	1420603353	17	41S	24E	SESW	0720FSL	1980FWL
Ratherford	17-31	430373117800S1	Producing	1420603353	17	41S	24E	NWNE	0500FNL	1980FEL
Ratherford	17-33	430373113400S1	Producing	1420603353	17	41S	24E	NWSE	1980FSL	1845FEL
Ratherford	17-42	430373117700S1	Producing	1420603353	17	41S	24E	SENE	1980FNL	0660FEL
Ratherford	17-44	430371573201S1	Producing	1420603353	17	41S	24E	SESE	0660FSL	0660FEL
Ratherford	18-11	430371573300S1	SI	1420603353	18	41S	24E	NWNW	0720FNL	0730FWL
Ratherford	18-13	430371573401S1	Producing	1420603353	18	41S	24E	NWSW	1980FSL	0500FWL
Ratherford	18-22	430373123600S1	Producing	1420603353	18	41S	24E	SENW	2200FNL	2210FWL
Ratherford	18-24	430373107900S1	Producing	1420603353	18	41S	24E	SESW	0760FSL	1980FWL
Ratherford	18-31	430373118101S1	Producing	1420603353	18	41S	24E	NWNE	0795FNL	2090FEL
Ratherford	18-33	430373113501S1	Producing	1420603353	18	41S	24E	NWSE	1870FSL	1980FEL
Ratherford	18-42	430373118200S1	Producing	1420603353	18	41S	24E	SENE	2120FNL	0745FEL
Ratherford	18-44	430373104500S1	SI	1420603353	18	41S	24E	SESE	0660FSL	0660FEL
Ratherford	19-11	430373108000S1	Producing	1420603353	19	41S	24E	NWNW	0660FNL	0660FWL
Ratherford	19-13	430373171900S1	Producing	1420603353	19	41S	24E	NWSW	1980FSL	0660FWL
Ratherford	19-22	430373104601S1	Producing	1420603353	19	41S	24E	SENW	1840FNL	1980FWL
Ratherford	19-24	430373175401S1	Producing	1420603353	19	41S	24E	SESW	0600FSL	1980FWL
Ratherford	19-31	430373104701S1	Producing	1420603353	19	41S	24E	NWNE	510FNL	1980FEL
Ratherford	19-33	430373104800S1	Producing	1420603353	19	41S	24E	NWSE	1980FSL	1980FEL
Ratherford	19-42	430373091600S1	Producing	1420603353	19	41S	24E	SENE	1880FNL	0660FEL
Ratherford	19-44	430373108100S1	Producing	1420603353	19	41S	24E	SESE	0660FSL	0660FEL
Ratherford	19-97	430373159600S1	Producing	1420603353	19	41S	24E	SENE	2562FNL	0030FEL
Ratherford	20-11	430373104900S1	Producing	1420603353	20	41S	24E	NWNW	0500FNL	0660FWL
Ratherford	20-13	430373091700S1	Producing	1420603353	20	41S	24E	NWSW	2140FSL	0500FWL
Ratherford	20-22	430373093000S1	Producing	1420603353	20	41S	24E	SENW	2020FNL	2090FWL
Ratherford	20-24	430373091800S1	Producing	1420603353	20	41S	24E	SESW	0820FSL	1820FWL

Ratherford Unit - Producer Well List

minus P&A's

Lease	Number	API #	Status	Lease #	Location					
					Sec	T	R	QTR/QTR	NSFoot	EWFoot
Ratherford	20-31	430373105001S1	Producing	1420603353	20	41S	24E	NWNE	0660FNL	1880FEL
Ratherford	20-33	430373093100S1	Producing	1420603353	20	41S	24E	NWSE	1910FSL	2140FEL
Ratherford	20-42	430373105100S1	Producing	1420603353	20	41S	24E	SENE	1980FNL	0660FEL
Ratherford	20-44	430373091501S1	Producing	1420603353	20	41S	24E	SESE	0620FSL	0760FEL
Ratherford	20-66	430373159201S1	Producing	1420603353	20	41S	24E	SWNW	1369FNL	1221FWL
Ratherford	20-68	430373159100S1	Producing	1420603353	20	41S	24E	NWSW	1615FSL	1276FWL
Ratherford	15-12	430371571501S1	Producing	1420603355	15	41S	24E	SWNW	1820FNL	0500FWL
Ratherford	15-22	430373044900S1	SI	1420603355	15	41S	24E	SENW	1980FNL	2050FWL
Ratherford	15-32	430371571700S1	Producing	1420603355	15	41S	24E	SWNE	1980FNL	1980FEL
Ratherford	15-33	430371571800S1	Producing	1420603355	15	41S	24E	NWSE	1650FSL	1980FEL
Ratherford	15-41	430371571900S1	TA	1420603355	15	41S	24E	NENE	0660FNL	0660FEL
Ratherford	15-42	430373044800S1	Producing	1420603355	15	41S	24E	SENE	2020FNL	0820FEL
Ratherford	16-13	430373116801S1	Producing	1420603355	16	41S	24E	NWSW	1980FSL	660FWL
Ratherford	16-32	430371572300S1	Producing	1420603355	16	41S	24E	SWNE	1980FNL	1980FEL
Ratherford	16-41	430371572500S1	Producing	1420603355	16	41S	24E	NENE	0660FNL	0660FEL
Ratherford	16-77	430373176800S1	Producing	1420603355	16	41S	24E	NESW	2587FSL	2410FWL
Ratherford	21-23	430371375400S1	Producing	1420603355	21	41S	24E	NESW	1740FSL	1740FWL
Ratherford	21-24	430373172001S1	SI	1420603355	21	41S	24E	SESW	487FSL	2064FWL
Ratherford	21-32	430371575500S1	SI	1420603355	21	41S	24E	SWNE	1880FNL	1980FEL
Ratherford	21-77	430373175801S1	SI	1420603355	21	41S	24E	NWSE	2511FSL	2446FEL
Ratherford	07-11	430373116300S1	Producing	1420603368	7	41S	24E	NWNW	0660FNL	0710FWL
Ratherford	07-13	430373116400S1	Producing	1420603368	7	41S	24E	NWSW	2110FSL	0740FWL
Ratherford	07-22	430373116500S1	Producing	1420603368	7	41S	24E	SENW	1980FNL	1980FWL
Ratherford	07-24	430373116600S1	Producing	1420603368	7	41S	24E	SESW	0880FSL	2414FWL
Ratherford	07-44	430373118900S1	SI	1420603368	7	41S	24E	SESE	0737FSL	0555FEL
Ratherford	08-12	430371599100S1	Producing	1420603368	8	41S	24E	SWNW	1909FNL	0520FWL
Ratherford	08-21	430371599300S1	Producing	1420603368	8	41S	24E	NENW	0616FNL	1911FWL
Ratherford	08-23	430371599400S1	Producing	1420603368	8	41S	24E	NESW	1920FSL	2055FWL
Ratherford	08-32	430371599500S1	Producing	1420603368	8	41S	24E	SWNE	1980FNL	1980FEL
Ratherford	08-34	430371599600S1	Producing	1420603368	8	41S	24E	SWSE	0660FSL	1980FEL
Ratherford	04-34	430371616400S1	Producing	14206034035	4	41S	24E	SWSE	0660FSL	1980FEL
Ratherford	11-14	430371616700S1	Producing	14206034037	11	41S	24E	SWSW	0660FSL	0660FWL
Ratherford	09-34	430371571100S1	SI	14206034043	9	41S	24E	SWSE	0660FSL	1980FEL
Ratherford	10-12	430371571200S1	Producing	14206034043	10	41S	24E	SWNW	1980FNL	0660FWL
Ratherford	10-14	430371571300S1	Producing	14206034043	10	41S	24E	SWSW	0510FSL	0710FWL
Ratherford	10-32	430371571400S1	TA	14206034043	10	41S	24E	SWNE	2080FNL	1910FEL
Ratherford	10-44	430373045100S1	TA	14206034043	10	41S	24E	SESE	0820FSL	0510FEL
Ratherford	29-11	430373105300S1	Producing	1420603407	29	41S	24E	NWNW	0770FNL	0585FWL
Ratherford	29-22	430373108200S1	Producing	1420603407	29	41S	24E	SENW	2130FNL	1370FWL
Ratherford	29-31	430373091401S1	Producing	1420603407	29	41S	24E	NWNE	0700FNL	2140FEL
Ratherford	29-33	430373093200S1	SI	1420603407	29	41S	24E	NWSE	1860FSL	1820FEL
Ratherford	29-34	430371534000S1	SI	1420603407	29	41S	24E	SWSE	0817FSL	2096FEL
Ratherford	29-42	430373093700S1	SI	1420603407	29	41S	24E	SENE	1850FNL	0660FEL
Ratherford	30-32	430371534200S1	Producing	1420603407	30	41S	24E	SWNE	1975FNL	2010FEL
Ratherford	28-11	430373044600S1	Producing	1420603409	28	41S	24E	NWNW	0520FNL	0620FWL

Ratherford Unit - Producer Well List

minus P&A's

Lease	Number	API #	Status	Lease #	Location					
					Sec	T	R	QTR/QTR	NSFoot	EWFoot
Ratherford	09-12	430371512600S1	Producing	14206035045	9	41S	24E	SWNW	1865FNL	0780FWL
Ratherford	09-14	430371512700S1	Producing	14206035046	9	41S	24E	SWSW	0695FSL	0695FWL
Ratherford	04-14	430371616300S1	Producing	14206035446	4	41S	24E	SWSW	0500FSL	0660FWL
Ratherford	03-12	430371562000S1	Producing	14206036506	3	41S	24E	SWNW	2140FNL	0660FWL

Water Source Wells (Feb 2006)

RU	S1	4303700001	Active
RU	S2	4303700002	Active
RU	S3	4303700003	Active
RU	S4	4303700004	Active
RU	S5	4303700005	Active
RU	S6	4303700006	Active
RU	S7	4303700007	Active
RU	S8	4303700008	Active
RU	S9	4303700009	Active
RU	S10	4303700010	Active
RU	S11	4303700011	Active
RU	S12	4303700012	Active
RU	S13	4303700013	Active
RU	S14	4303700014	Active
RU	S16	4303700016	Active
RU	S17	4303700017	Active

FEDERAL APPROVAL OF THIS ACTION IS NECESSARY

FORM 9

STATE OF UTAH
DEPARTMENT OF NATURAL RESOURCES
DIVISION OF OIL, GAS, AND MINING

5.LEASE DESIGNATION AND SERIAL NUMBER: 14-20-603-353

SUNDRY NOTICES AND REPORTS ON WELLS

Do not use this form for proposals to drill new wells, significantly deepen existing wells below current bottom-hole depth, reenter plugged wells, or to drill horizontal laterals. Use APPLICATION FOR PERMIT TO DRILL form for such proposals.

6. IF INDIAN, ALLOTTEE OR TRIBE NAME: NAVAJO

7.UNIT or CA AGREEMENT NAME: RATHERFORD

1. TYPE OF WELL Oil Well

8. WELL NAME and NUMBER: RATHERFORD 18-13

2. NAME OF OPERATOR: RESOLUTE NATURAL RESOURCES

9. API NUMBER: 43037157340000

3. ADDRESS OF OPERATOR: 1700 Lincoln Street, Suite 2800 , Denver, CO, 80203 4535

PHONE NUMBER: 303 534-4600 Ext

9. FIELD and POOL or WILDCAT: GREATER ANETH

4. LOCATION OF WELL
FOOTAGES AT SURFACE: 1980 FSL 0500 FWL
QTR/QTR, SECTION, TOWNSHIP, RANGE, MERIDIAN: Qtr/Qtr: NWSW Section: 18 Township: 41.0S Range: 24.0E Meridian: S

COUNTY: SAN JUAN

STATE: UTAH

11. CHECK APPROPRIATE BOXES TO INDICATE NATURE OF NOTICE, REPORT, OR OTHER DATA

TYPE OF SUBMISSION

- ✓ NOTICE OF INTENT — Approximate date work will start: 3/3/2016
- ☐ SUBSEQUENT REPORT — Date of Work Completion:
- ☐ SPUD REPORT — Date of Spud:
- ☐ DRILLING REPORT — Report Date:

TYPE OF ACTION

☐ ACIDIZE	☐ ALTER CASING	☐ CASING REPAIR
☐ CHANGE TO PREVIOUS PLANS	☐ CHANGE TUBING	☐ CHANGE WELL NAME
☐ CHANGE WELL STATUS	☐ COMMINGLE PRODUCING FORMATIONS	☐ CONVERT WELL TYPE
☐ DEEPEN	☐ FRACTURE TREAT	☐ NEW CONSTRUCTION
☐ OPERATOR CHANGE	☐ PLUG AND ABANDON	☐ PLUG BACK
☐ PRODUCTION START OR RESUME	☐ RECLAMATION OF WELL SITE	☐ RECOMPLETE DIFFERENT FORMATION
☐ REPERFORATE CURRENT FORMATION	☐ SIDETRACK TO REPAIR WELL	☐ TEMPORARY ABANDON
☐ TUBING REPAIR	☐ VENT OR FLARE	☐ WATER DISPOSAL
☐ WATER SHUTOFF	☐ SI TA STATUS EXTENSION	☐ APD EXTENSION
☐ WILDCAT WELL DETERMINATION	✓ OTHER	OTHER: ESP Replacement

12. DESCRIBE PROPOSED OR COMPLETED OPERATIONS. Clearly show all pertinent details including dates, depths, volumes, etc.

Resolute Natural Resources respectfully submits this sundry as notice of a ESP replacement on the above well. Attached are the procedures and schematic

Accepted by the Utah Division of Oil, Gas and Mining

Date: March 07, 2016

By: Dark K Dunt

NAME (PLEASE PRINT)	PHONE NUMBER	TITLE
Erin Joseph	303 573-4886	Sr. Regulatory Analyst

SIGNATURE	DATE
N/A	2/26/2016

RECEIVED: Feb. 26, 2016

Resolute
Natural Resources

Date: February 25, 2016
Re: RU 18-13 ESP Replacement

Procedure
Horsley Witten: NO

1) MIRU WSU. LOTO equipment. Test rig anchors as required.
2) RU WL & shift open the sliding sleeve at 5117' KB. Kill well as required with circ down tbg, up casing.
3) NDWH. NU BOP. Test BOP.
4) MIRU ESP cable spooler & cap string spooler. Well has 3/8" x 60' cap string.
5) POOH & stand back tubing, watching for possible leak below the check valve. Call Bill Albert for tubing inspection (970) 371-9682, or Tech Support: Virgil Holly (435) 730-5087 or Nate Dee (435) 730-5442.
6) Lay down & inspect/evaluate failed ESP assembly for any obvious cause of failure.
7) Make bit & scraper trip to 5324' KB/top window (this equipment has been in place since 12/2010).
8) Run new ESP assembly as follows: Centralizer sub, Centinel, ESP plus cable, sliding sleeve w/2.313 'X' profile 2 jts above ESP, **no check valve**, 2-7/8" tubing to surface & cap string to 60' as before. Land near the previous landing depth with bottom of ESP bha at ~5300' KB.
9) Pressure test & re-run the existing cap string if the condition is generally good.
10) Perform WH penetrator tie-ins at tubing hanger for ESP cable & capillary string and land tubing.
11) ND BOPE. NUWH. Re-connect to VSD and transformer.
12) Perform necessary tests to ensure that the pump is ready to be returned to production.
13) Notify Operations Supervisor Alfred Redhouse (435) 619-7227 that the well is ready to return to production.
14) RDMOL.
15) Hook up appropriate chemical treatment.

Sundry Number: 70082 API Well Number: 4303715734000 0

RATHERFORD UNIT # 18-13 HZ
GREATER ANETH FIELD
Surface Loc: 1980' FSL & 500' FWL
SEC 18-T41S-R24E
SAN JUAN COUNTY, UTAH
API 43-037-15734
PRISM 0043062

B.H. Location Lateral #1:
932' S & 1303' E of Surface Location

B.H. Location Lateral #2:
541' N & 644' W of Surface Location

B.H. Location Lateral #2ST:
1204' N & 1446' W of Surface Location

PRODUCER

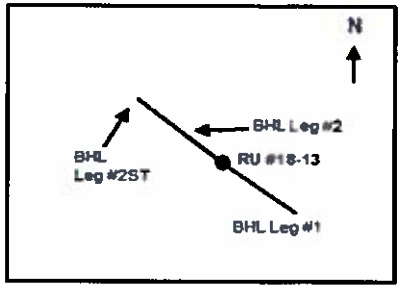

KB 4695' GL 4683'

Hole Size: 17.25"

Conductor Pipe: 13-3/8" 27.1# set at 177' w/ 175 sx. Circ to surface. 4-1-58

Hole Size: 11"

8-5/8" 24# J-55 set at 1421' w/ 430 sx cmt. Ran 1" pipe down annulus, pumped 90 sx to surface. 4-3-58

Hole Size: 7-7/8"

2-7/8" 6.5# J-55 Tubing 12-9-2010

Sliding sleeve @ 5117
Check valve @ 5152
Top of ESP @ 5253'
ESP Intake @ 5266'
Seal Section @ 5270'
Motor @ 5276'
Centinel @ 5287-5291'
Crossover & pup jt to 5296'

Lateral #2:
TMD 6242', TVD 5465'
Inc. 95.9, Azimuth 294.2,
North 541', West 644',
VS 941' 9-5-97

Openhole Lateral #2 5331-6242' TD MD (window in csg at 5324-31')

Openhole Lateral #2ST 5947-8400' TD MD

Openhole Lateral #1 5358-7060' TD MD (window in csg at 5351-58')

Lateral #1:
TMD 7060', TVD 5474',
Inc. 88.2, Azimuth 124.9,
South 932', East 1303',
VS 1602' 9-5-97

TIW Big Bore Ptr at 5366'; Keyway at 233 GTF. 8-27-97

Perf'd 6-27-87 5412-23'
Perf'd 4-23-58 5458-86' 5492-5502' 5533-44'

CICR at 5558' 4-12-66

4-12-66 Sqz'd off 5568-90' 5598-5614'

Orig. PBTD 5637' 4-23-58

5-1/2" 15.5# & 14# K-55 set at 5671' w/ 232 sx. Calc. TOC at 4196'. 4-5-58

Orig. TD 5671' 4-5-58

Lateral #2ST:
TMD 7278'*, TVD 5482'
Inc. 91.4, Azimuth 311.9,
North 1204', West 1446',
VS 1881' 9-5-97
*Note: dir. survey info. conflicts with survey info. from drilling report.

Wdss 12-17-09 R.U. # 18-13HZ

STATE OF UTAH
DEPARTMENT OF NATURAL RESOURCES
DIVISION OF OIL, GAS, AND MINING

FORM 9

5.LEASE DESIGNATION AND SERIAL NUMBER: 14-20-603-353

SUNDRY NOTICES AND REPORTS ON WELLS

Do not use this form for proposals to drill new wells, significantly deepen existing wells below current bottom-hole depth, reenter plugged wells, or to drill horizontal laterals. Use APPLICATION FOR PERMIT TO DRILL form for such proposals.

6. IF INDIAN, ALLOTTEE OR TRIBE NAME: NAVAJO

7.UNIT or CA AGREEMENT NAME: RATHERFORD

1. TYPE OF WELL Oil Well

8. WELL NAME and NUMBER: RATHERFORD 18-13

2. NAME OF OPERATOR: RESOLUTE NATURAL RESOURCES

9. API NUMBER: 43037157340000

3. ADDRESS OF OPERATOR: 1700 Lincoln Street, Suite 2800 , Denver, CO, 80203 4535

PHONE NUMBER: 303 534-4600 Ext

9. FIELD and POOL or WILDCAT: GREATER ANETH

4. LOCATION OF WELL
FOOTAGES AT SURFACE: 1980 FSL 0500 FWL
QTR/QTR, SECTION, TOWNSHIP, RANGE, MERIDIAN: Qtr/Qtr: NWSW Section: 18 Township: 41.0S Range: 24.0E Meridian: S

COUNTY: SAN JUAN

STATE: UTAH

11. CHECK APPROPRIATE BOXES TO INDICATE NATURE OF NOTICE, REPORT, OR OTHER DATA

TYPE OF SUBMISSION

- ☐ NOTICE OF INTENT — Approximate date work will start:
- ✓ SUBSEQUENT REPORT — Date of Work Completion: 3/7/2016
- ☐ SPUD REPORT — Date of Spud:
- ☐ DRILLING REPORT — Report Date:

TYPE OF ACTION

☐ ACIDIZE	☐ ALTER CASING	☐ CASING REPAIR
☐ CHANGE TO PREVIOUS PLANS	☐ CHANGE TUBING	☐ CHANGE WELL NAME
☐ CHANGE WELL STATUS	☐ COMMINGLE PRODUCING FORMATIONS	☐ CONVERT WELL TYPE
☐ DEEPEN	☐ FRACTURE TREAT	☐ NEW CONSTRUCTION
☐ OPERATOR CHANGE	☐ PLUG AND ABANDON	☐ PLUG BACK
☐ PRODUCTION START OR RESUME	☐ RECLAMATION OF WELL SITE	☐ RECOMPLETE DIFFERENT FORMATION
☐ REPERFORATE CURRENT FORMATION	☐ SIDETRACK TO REPAIR WELL	☐ TEMPORARY ABANDON
☐ TUBING REPAIR	☐ VENT OR FLARE	☐ WATER DISPOSAL
☐ WATER SHUTOFF	☐ SI TA STATUS EXTENSION	☐ APD EXTENSION
☐ WILDCAT WELL DETERMINATION	✓ OTHER	OTHER: ESP Replacement

12. DESCRIBE PROPOSED OR COMPLETED OPERATIONS. Clearly show all pertinent details including dates, depths, volumes, etc.

Resolute Natural Resources respectfully submits this sundry as notice that the ESP replacement on the above well was completed on 3/7/16 according to previously approved procedures

Accepted by the Utah Division of Oil, Gas and Mining
FOR RECORD ONLY
March 22, 2016

NAME (PLEASE PRINT)	PHONE NUMBER	TITLE
Erin Joseph	303 573-4886	Sr. Regulatory Analyst

SIGNATURE	DATE
N/A	3/16/2016

RECEIVED: Mar. 16, 2016