UTAH DIVISION OF OIL AND GAS CONSERVATION

REMARKS: WELL LOG ____ ELECTRIC LOGS ____ FILE X WATER SANDS ____ LOCATION INSPECTED ____ SUB. REPORT/abd. ____

Location abandoned - 1/5/76

11-18-74 Footage

DATE FILED 9-17-74

LAND: FEE & PATENTED STATE LEASE NO. PUBLIC LEASE NO. U-093259-A INDIAN

DRILLING APPROVED: 9-17-74 / 11-18-74 (Revised)

SPUDDED IN:

COMPLETED: PUT TO PRODUCING:

INITIAL PRODUCTION:

GRAVITY A.P.I.

GOR:

PRODUCING ZONES:

TOTAL DEPTH:

WELL ELEVATION: 5109' GR

DATE ABANDONED: LA'd 1-5-76

FIELD: ~~Unnamed~~ 3/96 Wildcat

UNIT:

COUNTY: Grand

WELL NO. BLAZE "D" #1 APT. NO: 43-019-30216

LOCATION ~~760'~~ FT. FROM (N) ~~(S)~~ LINE, ~~2178'~~ FT. FROM (E) ~~(W)~~ LINE. SW ~~NW NE~~ ¼ – ¼ SEC. 20

Lot 3 754 FWL NW NW

TWP.	RGE.	SEC.	OPERATOR	TWP.	RGE.	SEC.	OPERATOR
				21 S	19 E	20	PHILLIPS PETROLEUM CO.

FILE NOTATIONS

Entered in NID File .....✓.....
Location Map Pinned .....✓.....
Card Indexed .....✓.....

Checked by ....
Approval ....
Disapproval ....

PWB
9-17-74

COMPLETION DATA:

Date Well Completed .....
Location Inspected .....
OW..... WW..... TA.....
GW..... OS..... PA.....
State of Fee Land .....

LOGS FILED

Driller's Log.....
Electrical Log (Yes) .....
E..... I..... Dual I Lat..... GR-N..... Micro.....
BHC Sonic GR..... Lat..... MLL..... Sonic.....
CBLog..... CCLog..... Others.....

Approval To Drill Terminated
1-5-76

djc
11-1-90

Form 9-331 C
(May 1963)

SUBMIT IN TRIPLICATE*
(Other instructions on reverse side)

Form approved.
Budget Bureau No. 42-R1425.

UNITED STATES
DEPARTMENT OF THE INTERIOR
GEOLOGICAL SURVEY

APPLICATION FOR PERMIT TO DRILL, DEEPEN, OR PLUG BACK

5. LEASE DESIGNATION AND SERIAL NO.: Fed. U-093259-A

6. IF INDIAN, ALLOTTEE OR TRIBE NAME:

7. UNIT AGREEMENT NAME:

8. FARM OR LEASE NAME: Blaze "D"

9. WELL NO.: 1

10. FIELD AND POOL, OR WILDCAT: Wildcat

11. SEC., T., R., M., OR BLK. AND SURVEY OR AREA: 20-21S-19E

1a. TYPE OF WORK: DRILL [X] DEEPEN [ ] PLUG BACK [ ]

b. TYPE OF WELL: OIL WELL [X] GAS WELL [ ] OTHER SINGLE ZONE [X] MULTIPLE ZONE [ ]

2. NAME OF OPERATOR: Phillips Petroleum Co.

3. ADDRESS OF OPERATOR: Box 2920 Casper, Wyoming

4. LOCATION OF WELL (Report location clearly and in accordance with any State requirements.*)
At surface: 760' FNL 2178' FEL (NW/4 NE/4)
At proposed prod. zone:

14. DISTANCE IN MILES AND DIRECTION FROM NEAREST TOWN OR POST OFFICE*: 3.5 miles northwest of Crescent Jct., Utah

12. COUNTY OR PARISH: Grand

13. STATE: Utah

15. DISTANCE FROM PROPOSED* LOCATION TO NEAREST PROPERTY OR LEASE LINE, FT. (Also to nearest drlg. unit line, if any): 9600

16. NO. OF ACRES IN LEASE: 9600

17. NO. OF ACRES ASSIGNED TO THIS WELL: 40

18. DISTANCE FROM PROPOSED LOCATION* TO NEAREST WELL, DRILLING, COMPLETED, OR APPLIED FOR, ON THIS LEASE, FT.:

19. PROPOSED DEPTH: 8000 ft.

20. ROTARY OR CABLE TOOLS: Rotary

21. ELEVATIONS (Show whether DF, RT, GR, etc.): Ungraded ground elevation 5098'

22. APPROX. DATE WORK WILL START*: Sept. 20, 1974

23. PROPOSED CASING AND CEMENTING PROGRAM

SIZE OF HOLE	SIZE OF CASING	WEIGHT PER FOOT	SETTING DEPTH	QUANTITY OF CEMENT
12 1/4"	8 5/8"	24#	500	Circ. to surface
7 7/8"	5 1/2"	15.5 - 14.0	8000	1,000' fillup

Drill a 8,000' White Rim exploratory well. BOP equipment will include 3,000 psi Hydril and double gate preventers.

Preventers will be operated daily and tested weekly.

The necessity for the unorthodox location is due to topographical conditions. Phillips owns or controls all the acreage within a 660' radius of the proposed well site.

approve C-3
+ USGS

IN ABOVE SPACE DESCRIBE PROPOSED PROGRAM: If proposal is to deepen or plug back, give data on present productive zone and proposed new productive zone. If proposal is to drill or deepen directionally, give pertinent data on subsurface locations and measured and true vertical depths. Give blowout preventer program, if any.

24.

SIGNED D. J. Fisher TITLE Operations Supt. DATE September 12, 1974
D. J. Fisher

(This space for Federal or State office use)

PERMIT NO. 43-019-30216 APPROVAL DATE

APPROVED BY TITLE DATE

CONDITIONS OF APPROVAL, IF ANY:

3-USGS Salt Lake City
2-State of Utah O&G CC, Salt Lake City
1-Bville E&P
1-Denver E&P
1-R. N. Hughes
1-File

*See Instructions On Reverse Side

Phillips Petroleum Co.
Blaze "D" #1

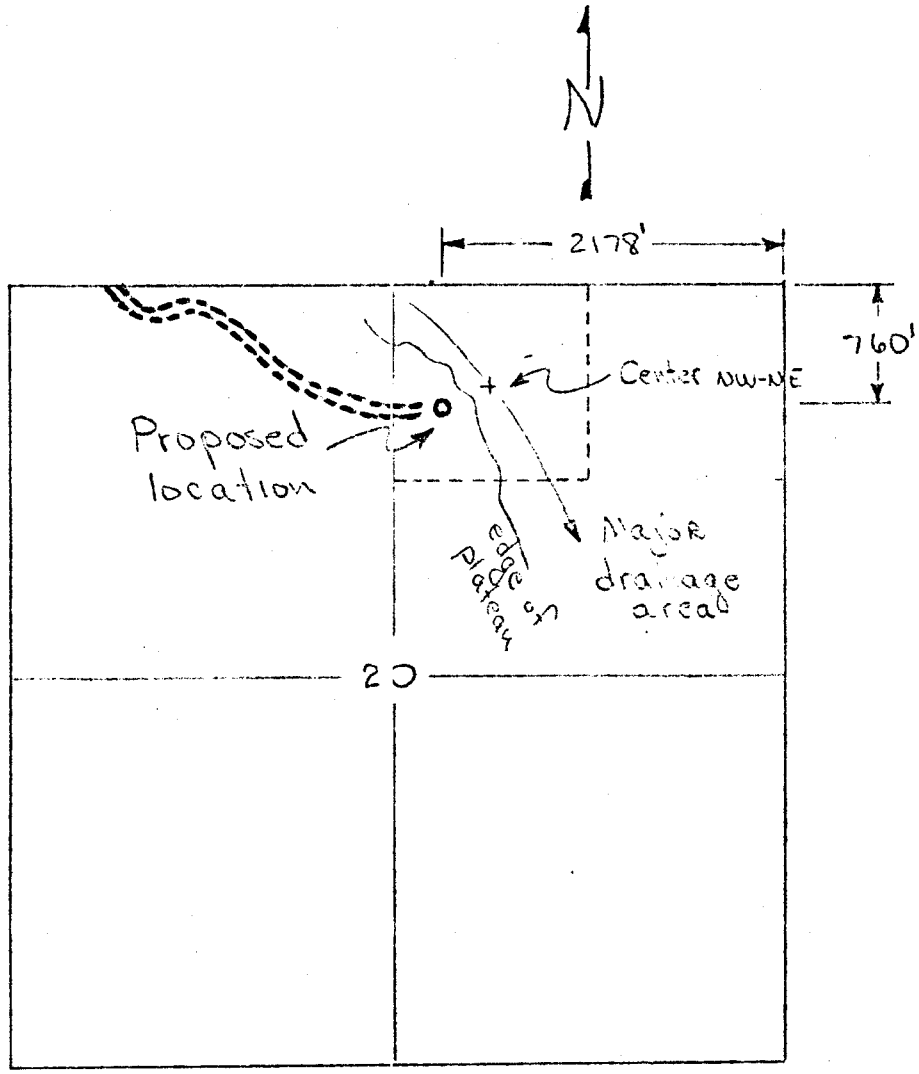

Section 20-21S-19E
Grand County, Utah

Note: Center of NW of NE falls in major drainage area. Moved location out of drainage area. Phillips owns or controls all the acreage within a 660' radius of the proposed well site.

T21S, R19E, S.L.B. & M.

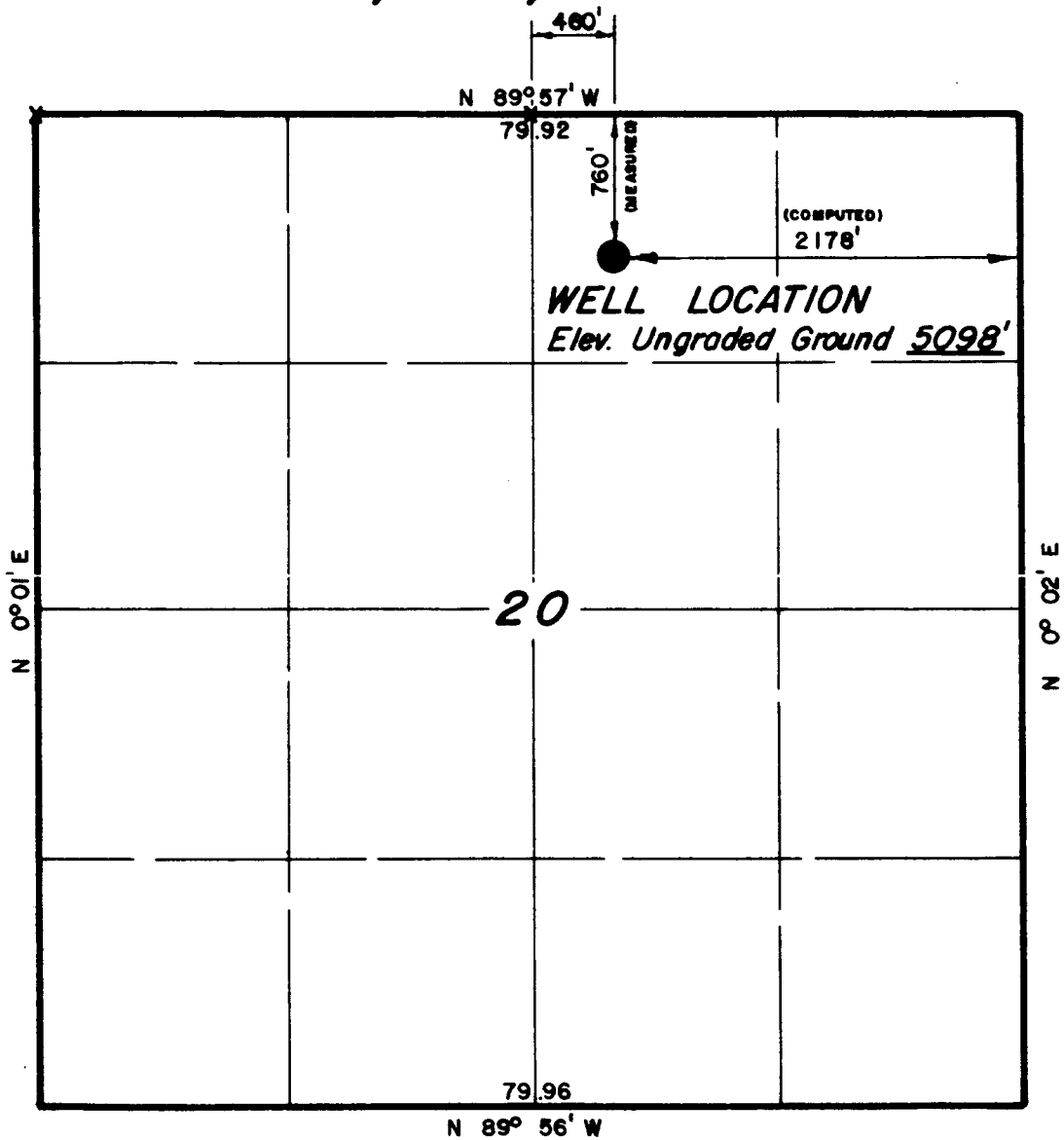

X = Section corners located.

PROJECT

PHILLIPS PETROLEUM COMPANY

Well location, located as shown in the NW 1/4 NE 1/4 Section 20, T21S, R19E, SLB. & M. Grand County, Utah.

CERTIFICATE

THIS IS TO CERTIFY THAT THE ABOVE PLAT WAS PREPARED FROM FIELD NOTES OF ACTUAL SURVEYS MADE BY ME OR UNDER MY SUPERVISION AND THAT THE SAME ARE TRUE AND CORRECT TO THE BEST OF MY KNOWLEDGE AND BELIEF.

REGISTERED LAND SURVEYOR
REGISTRATION Nº 2454
STATE OF UTAH

UINTAH ENGINEERING & LAND SURVEYING
P. O. BOX Q — 110 EAST - FIRST SOUTH
VERNAL, UTAH - 84078

SCALE 1" = 1000'	DATE 9/9/74
PARTY DA DG	REFERENCES GLO PLAT
WEATHER HOT	FILE PHILLIPS PETRO. CO.

PROJECT

PHILLIPS PETROLEUM CO.

Well location, BLAZE "D" #1, (Alt. Loc.) located as shown in the NW 1/4, NW 1/4, Section 20, T21S, R19E, S.L.B. & M., Grand County, Utah

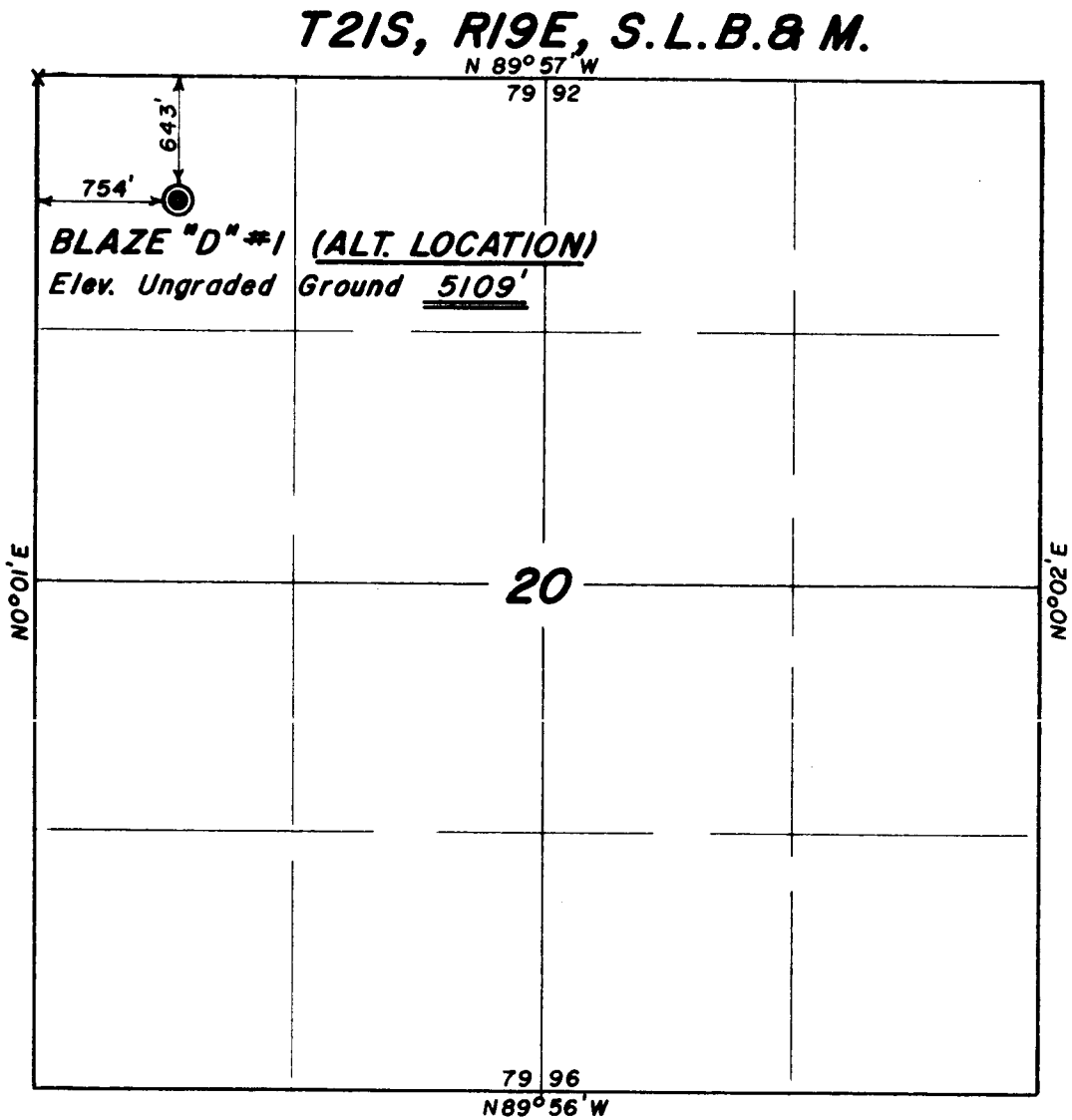

X = Section Corner Located

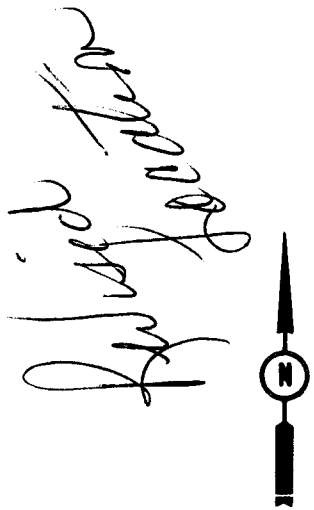

CERTIFICATE

THIS IS TO CERTIFY THAT THE ABOVE PLAT WAS PREPARED FROM FIELD NOTES OF ACTUAL SURVEYS MADE BY ME OR UNDER MY SUPERVISION AND THAT THE SAME ARE TRUE AND CORRECT TO THE BEST OF MY KNOWLEDGE AND BELIEF.

REGISTERED LAND SURVEYOR
REGISTRATION № 2454
STATE OF UTAH

UINTAH ENGINEERING & LAND SURVEYING
P. O. BOX Q – 110 EAST - FIRST SOUTH
VERNAL, UTAH - 84078

SCALE 1" = 1000'	DATE NOV. 12, 1974
PARTY LDT-WP-RL	REFERENCES G.L.O. PLAT
WEATHER FAIR	FILE PHILLIPS PETROLEUM CO

September 17, 1974

Phillips Petroleum Company
Box 2920
Casper, Wyoming 82601

Re: Well No's:
Blaze "B" #1
Sec. 7, T. 21 S, R. 19 E,
Blaze "D" #1
Sec. 20, T. 21 S, R. 19 E,
Grand County, Utah

Gentlemen:

Insofar as this office is concerned, approval to drill the above referred to well is hereby granted in accordance with Rule C-3(c), General Rules and Regulations and Rules of Practice and Procedure. Said approval is, however, conditional upon your company receiving the necessary approval from the U.S. Geological Survey and/or the Bureau of Land Management.

Should you determine that it will be necessary to plug and abandon these wells, you are hereby requested to immediately notify the following:

PAUL W. BURCHELL-Chief Petroleum Engineer
HOME: 277-2890
OFFICE: 328-5771

Due to the increase in Utah's drilling activity, and thus well inspections, it would be greatly appreciated if your office would advise us as to your drilling contractor, rig number, and toolpusher immediately upon spudding-in.

Enclosed please find Form OGC-8-X, which is to be completed whether or not water sands (aquifers) are encountered during drilling.

The API number assigned to this well is:

#"B" - 1: 43-019-30214
#"D" - 1: 43-019-30216

Very truly yours,

CLEON B. FEIGHT

November 14, 1974

P.O. Box 2920
Casper, Wyoming 82601

In re: Development Plan for Surface Use
Phillips Blaze "D" No. 1
Sec. 20-21S-19E
Grand County, Utah

United States Department of Interior (2)
Geological Survey - Conservation Division
8426 Federal Building
125 South State Street
Salt Lake City, Utah 84138

Gentlemen:

Phillips Petroleum Company respectfully submits the following development plan for surface use in order to drill an exploratory well, the Blaze "D" No. 1.

1. Access from Crescent Jct., Utah, is 3.5 miles northwest on existing road as indicated in red on the attached map No. 1.

2. No new road construction will be required. If substantial production is obtained, the existing road will be upgraded and maintained for regular usage.

3. The well will be located in the NW of the NW of Section 20, 21S, 19E. Line measurements are 643' FNL and 754' FWL. Nearest wells are Phillips Blaze "A" No. 1 currently producing and Phillips Blaze "C" No. 1 currently drilling.

4. There will be no lateral roads serving the well.

5. If productive, a tank battery will be constructed on the existing well pad.

6. Water will be obtained from Floy Wash Sec. 7-21S-19E.

7. Trash will be removed from the drilling site and deposited in an authorized dump. A chemical toilet will be installed on the drilling site.

8. Camp and office will be temporary trailers. The trailers will be occupied intermittently by the tool pusher and/or the Phillips' supervisor.

9. No airstrip will be constructed.

Continued -

10. Location layout will be similar to the attached plat. Rig site will be approximately 300' X 200' and the reserve pit 100' X 100'.

11. The drilling site is on Mancos shale. The location will require a 12' cut to the north, a 10' fill to the east, a 5' cut to the west and a 8' fill to the south. The reserve pit will be fenced when drilling is completed.

12. Vegetation is sparse with no grass.

Supplemental Drilling Plans:

1. Surface csg will be 500' of new 9 5/8" O.D. 40# K-55.

2. Casinghead will be 9 5/8" X 10" Series 900-3000 psi.

3. No intermediate casing is planned.

4. Blowout preventer equipment will include a 3,000 psi hydril and 3,000 psi double gate hydraulic preventers in accordance with the attached Phillips' standard (figure No. 6). The fill, kill, and choke lines are as specified. Rams will be blind and pipe.

5. Auxiliary equipment will include a kelly cock, a drill pipe "stabbing" valve, and a drill pipe float.

6. Anticipated bottom hole pressure is 2500 psi.

7. Drilling fluid will be water base mud with viscosity, pH, and water loss control as required to total depth.

Very truly yours,

PHILLIPS PETROLEUM COMPANY

F. C. Morgan
Area Superintendent

KCJ/kk
Attach.
cc: State of Utah

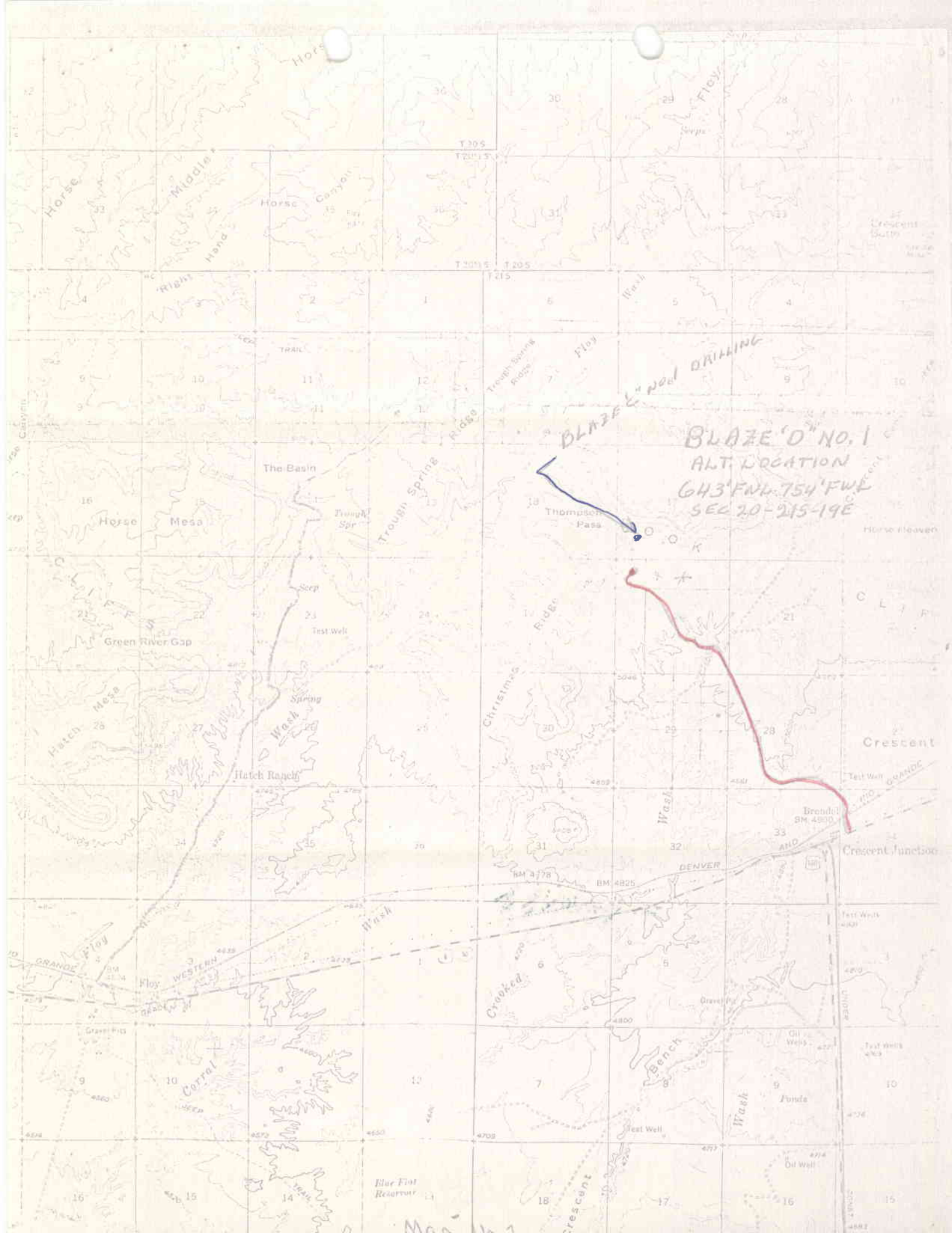
BLAZE "C" NO. 1 DRILLING
BLAZE "D" NO. 1
ALT. LOCATION
643' FNL 754' FWL
SEC 20-21S-19E
The Basin
Horse Mesa
Green River Gap
Hatch Mesa
Hatch Ranch
Trough Spring Ridge
Thompson Pass
Christmas Ridge
Crescent
Crescent Junction
Brendel
Horse Heaven
Crooked Wash
Corral Wash
Bench
Blue Flat Reservoir
Ponds
Test Well
Oil Well
Gravel Pits
Horse Canyon
Middle Hand
Right Hand
Floy Wash
Crescent Butte
DENVER AND RIO GRANDE
WESTERN
BM 4825
BM 4778
BM 4800
T 20 S
T 21 S

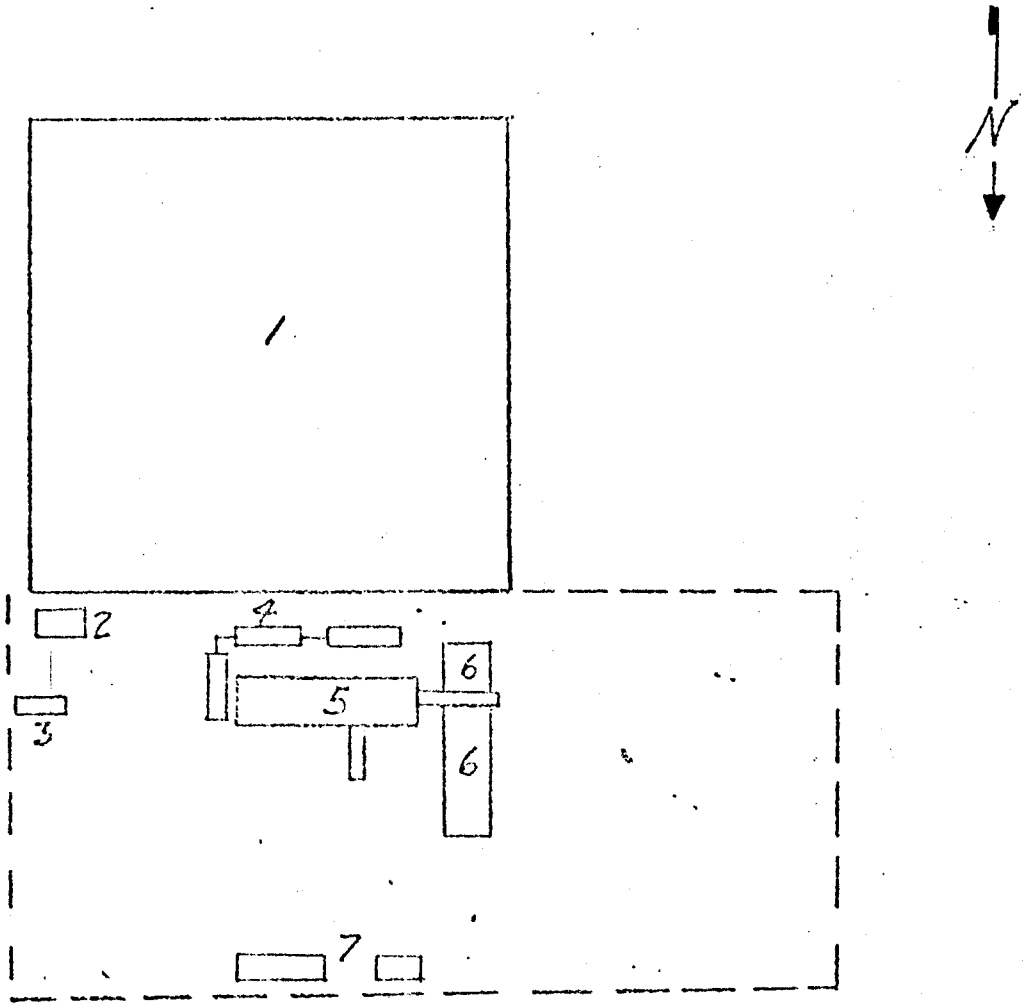

LEGEND:

1. Reserve Pit
2. Burn Pit
3. Boiler, if req'd.
4. Mud Tanks
5. Rig
6. Pipe Racks
7. Trailers, as req'd.

— — — Working Area

Phillips Petroleum Co. BARTLESVILLE, OKLAHOMA

Development Plan for Surface Use

Blaze "D" # 1

REVISION	BY	DATE				
			DRAWN		AFE. NO.	DWG. NO.
			CHECKED			
			APPROVED		SCALE 1" = 80'	SHEET NO.

DOUBLE PREVENTER OPTION

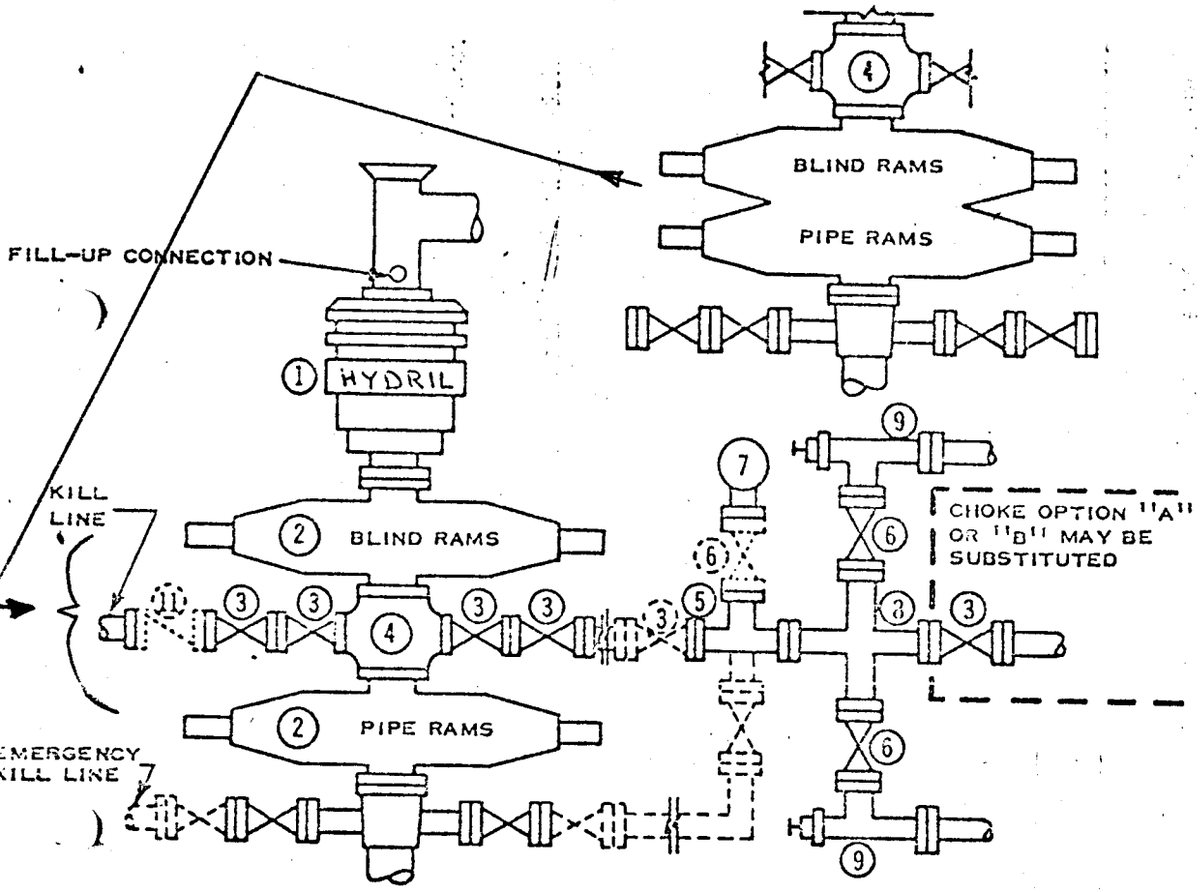

1. SER. 900 HYDRIL "GK"
2. SER. 900 RAM-TYPE BOP
3. 3" SER. 900 VALVE
4. SER. 900 DRILLING SPOOL
5. 3" SER. 900 X 2" SER. 900 STEEL TEE
6. 2" SER. 900 VALVE
7. 2" MUD PRESSURE GAUGE
8. 3" SER. 900 X 2" SER. 900 STEEL CROSS
9. 2" SER. 900 ADJ. CHOKE
10. HYDRAULIC CHOKE, 2500 PSI WP OR BETTER
11. 3" SER. 900 CHECK VALVE

NOTES:

1. 3000 PSI WP OR BETTER CLAMP HUBS MAY BE SUBSTITUTED FOR FLANGES
2. ONE ADJUSTABLE CHOKE MAY BE REPLACED WITH A POSITIVE CHOKE
3. VALVES MAY BE EITHER HAND OR POWER OPERATED BUT, IF POWER OPERATED, THE VALVES FLANGED TO THE BOP RUN MUST BE CAPABLE OF BEING OPENED AND CLOSED MANUALLY OR CLOSE ON POWER FAILURE AND BE CAPABLE OF BEING OPENED MANUALLY

..... OPTIONAL EQUIPMENT

Double gate preventers will be used in place of two single with spool

CHOKE OPTION "A"

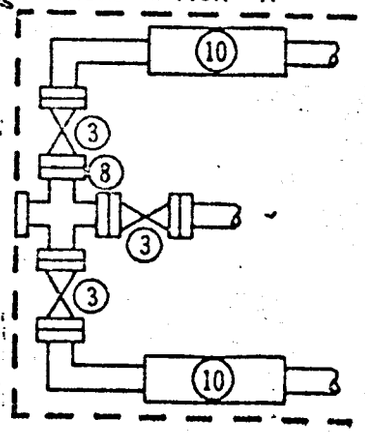

CHOKE OPTION "B"

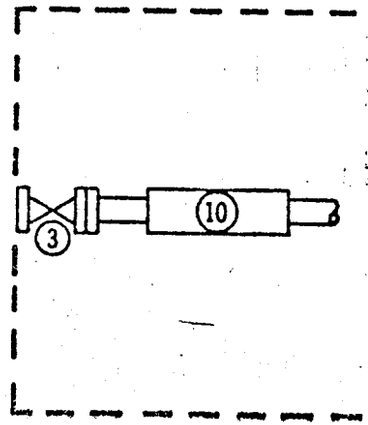

PHILLIPS PETROLEUM COMPANY
ONE HYDRIL & TWO RAM UNITS
3000 PSI WORKING PRESSURE
BLOWOUT PREVENTER HOOK-UP
(SERIES 900 FLANGES OR BETTER)

REV 6/73 FIGURE NO. 6

Development Plan for Surface Use
Blaze "D" #1

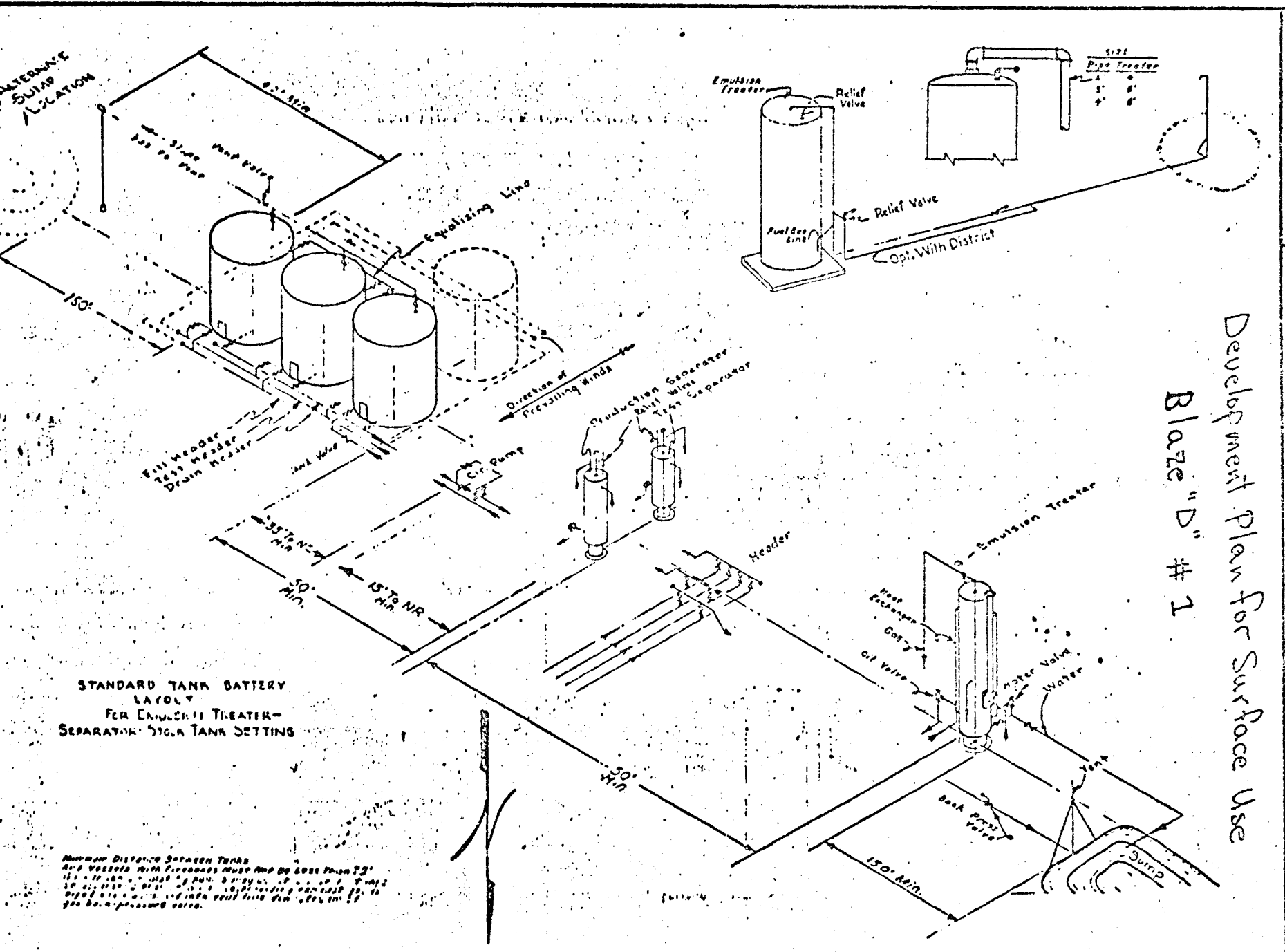

FOR FULL SCALE DWG. ORDER P-30-C-30 SH. P-3-1

REV NO. 1	STORAGE TANKS - PRODUCTION TANK BATTERY ASSEMBLY	26.19-1
DATE 6-71		PAGE 7 OF 11

PHILLIPS PETROLEUM COMPANY

November 14, 1974

P. O. Box 2920
Casper, Wyoming 82601

United States Department of Interior
Geological Survey - Conservation Division
8426 South State Street
Salt Lake City, Utah 84138

Gentlemen:

As per our verbal discussion with Mr. Bill Martin on November 8, 1974, we are submitting a new permit to drill and a revised development plan for the Blaze "D" No. 1, Grand County, Utah. This permit and development plan reflects the change in location of the proposed drilling site of the Blaze "D" No. 1.

Very truly yours,

PHILLIPS PETROLEUM COMPANY

F. C. Morgan

F. C. Morgan
Area Superintendent

KCJ/kk
Attach.

State of Utah O&GCC

Form 9-331 C
(May 1963)

SUBMIT IN TRIPLICATE*
(Other instructions on reverse side)

Form approved.
Budget Bureau No. 42-R1425.

UNITED STATES
DEPARTMENT OF THE INTERIOR
GEOLOGICAL SURVEY

APPLICATION FOR PERMIT TO DRILL, DEEPEN, OR PLUG BACK

5. LEASE DESIGNATION AND SERIAL NO.: Fed. U-093259-A

6. IF INDIAN, ALLOTTEE OR TRIBE NAME:

7. UNIT AGREEMENT NAME:

8. FARM OR LEASE NAME: Blaze "D"

9. WELL NO.: 1

10. FIELD AND POOL, OR WILDCAT: Wildcat

11. SEC., T., R., M., OR BLK. AND SURVEY OR AREA: 20-21S-19E

1a. TYPE OF WORK: DRILL [X] DEEPEN [ ] PLUG BACK [ ]

b. TYPE OF WELL: OIL WELL [X] GAS WELL [ ] OTHER SINGLE ZONE [X] MULTIPLE ZONE [ ]

2. NAME OF OPERATOR: Phillips Petroleum Company

3. ADDRESS OF OPERATOR: P. O. Box 2920 Casper, Wyoming 82601

4. LOCATION OF WELL (Report location clearly and in accordance with any State requirements.*)
At surface: 643' FNL - 754' FWL (NW/4-NW/4)
At proposed prod. zone:

14. DISTANCE IN MILES AND DIRECTION FROM NEAREST TOWN OR POST OFFICE*: 3.5 miles northwest of Crescent Junction, Utah

12. COUNTY OR PARISH: Grand

13. STATE: Utah

15. DISTANCE FROM PROPOSED* LOCATION TO NEAREST PROPERTY OR LEASE LINE, FT. (Also to nearest drlg. unit line, if any): 9600

16. NO. OF ACRES IN LEASE: 9600

17. NO. OF ACRES ASSIGNED TO THIS WELL: 40

18. DISTANCE FROM PROPOSED LOCATION* TO NEAREST WELL, DRILLING, COMPLETED, OR APPLIED FOR, ON THIS LEASE, FT.:

19. PROPOSED DEPTH: 8000 ft.

20. ROTARY OR CABLE TOOLS: Rotary

21. ELEVATIONS (Show whether DF, RT, GR, etc.): Ungraded ground 5109'

22. APPROX. DATE WORK WILL START*: November 28, 1974

23. PROPOSED CASING AND CEMENTING PROGRAM

SIZE OF HOLE	SIZE OF CASING	WEIGHT PER FOOT	SETTING DEPTH	QUANTITY OF CEMENT
12 1/4	9 5/8	40	500	Circ. to Surface
7 7/8	5 1/2	15.5 - 14.0	8000	1000' fillup

Drill a 8,000' White Rim Exploratory Well.

BOP equipment will include 3,000 psi Hydril and double gate preventers. Preventers will be operated daily and tested weekly.

Revised

APPROVED BY DIVISION OF
OIL & GAS CONSERVATION
DATE NOV 18 1974
BY C. B. Feight

IN ABOVE SPACE DESCRIBE PROPOSED PROGRAM: If proposal is to deepen or plug back, give data on present productive zone and proposed new productive zone. If proposal is to drill or deepen directionally, give pertinent data on subsurface locations and measured and true vertical depths. Give blowout preventer program, if any.

24.

SIGNED F. C. Morgan TITLE Area Superintendent DATE November 14, 1974

(This space for Federal or State office use)

PERMIT NO. 43-019-30216 APPROVAL DATE

APPROVED BY TITLE DATE

CONDITIONS OF APPROVAL, IF ANY:

3-USGS, SLC, Utah
2-State of Utah, O&G CC
1-Bville E&P
1-Denver E&P
1-R. N. Hughes
1-File

*See Instructions On Reverse Side

SUMMARY OF ENVIRONMENTAL IMPACT EVALUATION

Phillips Petr.
Blaze "D" #1
Sec. 20 - 21s - 19E
U-093259-A
Grand County, Utah
Dec 11, 1974

USGS - Alexander
BLM -
Phillips -

☒ Enhance
☐ No Effect
☑ Minor Impact
☒ Major Impact

		Construction				Pollution				Drilling, Production						Transport Operations			Accidents		Other
		Roads, bridges, airports	Transmission lines, pipelines	Dams & impoundments	Others (pump stations, compressor stations, etc.)	Burning, noise, junk disposal	Liquid effluent discharge	Subsurface disposal	Others (toxic gases, noxious gas, etc.)	Well drilling	Fluid removal (Prod. wells, facilities)	Secondary Recovery	Noise or obstruction of scenic views	Mineral processing (ext. facilities)	Others	Trucks	Pipelines	Others	Spills and leaks	Operational failure	
Land Use	Forestry NA																				
	Grazing ✓	0				/	/			/			/			/			/		
	Wilderness NA																				
	Agriculture NA																				
	Residential-Commercial NA																				
	Mineral Extraction NA																				
	Recreation ✓	0				/				/						/					
	Scenic Views ✓	/				/	/			/			/			/			/		
	Parks, Reserves, Monuments ✓																				
	Historical Sites NA																				
	Unique Physical Features NA																				
Flora & Fauna	Birds ✓					/	/			/			/						/		
	Land Animals ✓	/				/	/			/			/			/			/		
	Fish NA																				
	Endangered Species NA																				
	Trees, Grass, Etc. ✓	/		/			/														
Phy. Charact.	Surface Water NA																				
	Underground Water ?																				
	Air Quality ✓					/							/			/			/		
	Erosion ✓	/					/												/		
	Other ✓																				
	Effect On Local Economy ✓	0		0						0						0					
	Safety & Health ✓					/	/		/		/		/			/			/	/	

Others
cc: BLM-Moab
✓ Paul Burchell
Reg. Mgr.-Denver
File

Lease [redacted] U-093259-A

Well No. & Location well #BLAZE "D" 1 Sec 20 -21s - 19E

Grand County, Utah

ENVIRONMENTAL IMPACT ANALYSIS - ATTACHMENT 2-B

1. Proposed Action

Phillips petroleum Company proposes to drill a Wildcat gas test well to the depth of about 8,000 feet. Road improvements and location construction should consume no more than one week The drilling operation would commence about the middle of JANUARY and should last no more than one month.

2. Location and Natural Setting (existing environmental situation)

The well site is in an area where erosion has been severe. [redacted] Steep gullies with a surface of mancos shale. The location will require a maximum 12' cut on the north. The vegetation is sparse desert shrub with no grasses.

The wildlife is the usual desert fauna with no known endangered species.

There is a grazing allotment on the LAND but vegetation is so sparse that most of the grazing is done 2 or 3 miles south.

There are no known Historical sites that would be effected and no evidence of archeological sites was noted.

3. Effects on Environment by Proposed Action (potential impact)

The drilling and completion of a dry hole or failure would have little long term effect on the environment. Discovery of an oil or gas field would have moderate effect in that the character of the area would be changed

Improvement of roads would benefit the grazing and recreation use of the area in that it would be more accessible.

There would be moderate scaring of the now nearly natural area which will require 5-10 years to obliterate.

The drilling and associated traffic will add a minor amount of pollution to the air as well as temporarily disturbing livestock and wildlife.

Discovery of an oil or gas deposit would help to alleviate the current energy problems.
The roads and location construction will be conducted by a local contractor thus benefitting the local economy slightly.

4. Alternatives to the Proposed Action

Not Drilling the well.

Denying the proposed permit and suggesting an alternate location where environmental damage would be lessened. No nearby locations could be found that would justify this action.

5. Adverse Environmental Effects Which Cannot Be Avoided

Temporary disturbance of livestock and wild life.

Temporary mess due to drilling activity for about 1 year and requiring 5 to 10 years to obliterate the scars.

Detraction from the aesthetics.

Minor air pollution over a short term due to exhaust emissions from rig engines & support traffic & equipment.

Minor induced & accelerated erosion potential due to surface disturbance, surface use of operations area, & support traffic use of roads & operations area.

6. Determination

(This requested action (~~does~~) (does not) constitute a major Federal action significantly affecting the environment in the sense of NEPA, Section 102(2) (c)).

Date Inspected Dec 11, 1974

Geological Survey
Casper District
Casper, Wyoming

January 5, 1976

Phillips Petroleum Company
Box 2920
Casper, Wyoming

Re: Well No's:
Blaze "A" #2,
Sec. 12, T. 21 S, R. 18 E,
Blaze "B" #1
Sec. 7, T. 21 S, R. 19 E,
Blaze "D" #1
Sec. 20, T. 21 S, R. 19 E,
Blaze "E" #1
Sec. 29, T. 21 S, R. 19 E,
Blaze "F" #1
Sec. 23, T. 21 S, R. 18 E,
Grand County, Utah

Gentlemen:

Upon checking our records it is noted that there has been no attempt to commence drilling operations on the above referred to wells for a period of over one year. Therefore, please be advised that the approval to commence said operations granted by this Division is hereby terminated.

If and when you decide to drill these wells, it will be necessary for you to again obtain the approval of this office.

Very truly yours,

DIVISION OF OIL, GAS, AND MINING

CLEON B. FEIGHT
DIRECTOR

CBF:sw

RECEIVED
APR 12 1976
DIVISION OF OIL, GAS, & MINING

PI

Conservation Division
8440 Federal Building
Salt Lake City, Utah 84138

April 9, 1976

Phillips Petroleum Company
P. O. Box 2920
Casper, Wyoming 82601

Re: Well No. 1 "Blaze D"
NW¼, Sec. 20, T21S, R19E
Grand County, Utah
Lease Utah 093259-A

Gentlemen:

Our records indicate that drilling has not commenced on the referenced well and, therefore, the Application for Permit to Drill, which was approved January 8, 1975, is rescinded effective as of this date without prejudice.

Any surface disturbance associated with this approved application must be restored in accordance with the approved Surface Use Plan prior to release of bonding.

If you should again desire to drill at this location, please submit a new Application for Permit to Drill.

Sincerely yours,

(Orig. Sgd.) E. W. Guynn

E. W. Guynn
District Engineer

cc: Mr. W. Don Quigley
BC: Utah State O&G
BLM, Moab
O&GS, NRMA, Casper
USGS, Vernal
Well File

EWG:tw