ON-SITE PREDRILL EVALUATION
Division of Oil, Gas and Mining

OPERATOR: Chevron USA
WELL NAME & NUMBER: Zions Federal 35-137
API NUMBER: 43-015-30587
LEASE: Federal **FIELD/UNIT:**
LOCATION: 1/4,1/4 NESE **Sec:** 35 **TWP:** 16S **RNG:** 7E 2031' FSL 787' FEL
LEGAL WELL SITING: 460 F **SEC. LINE;** 460 F **1/4,1/4 LINE;** 920 F **ANOTHER WELL.**
GPS COORD (UTM): X = 491527 E; Y = 4359509 N **SURFACE OWNER:** Zions Bank.

PARTICIPANTS

M. Jones (DOGM), Jason Postma (ZIONS Bank/surface), D. Hamilton & A. Childs (Talon), R. Wirth (Chevron USA), R. Petersen (Emery County), M. Kaminski (BLM), and W. Luddington (USFS), was in attendance for this pre-site meeting. DWR was invited to attend this on-site evaluation however chose not to attend.

REGIONAL/LOCAL SETTING & TOPOGRAPHY

Proposed location is located ~7 miles Northwest of Huntington Utah, and ~24 miles Southwest of Price, Utah. Drainage of the site is to the northeast into Huntington Creek, a year-round live water source, which lies northeast of the location ~.5 miles. The soil is rocky sandy clay loam. Dry washes that have the potential of carrying large amounts of water during seasonal thunderstorms are common throughout the area and it's immediate surroundings.

SURFACE USE PLAN

CURRENT SURFACE USE: Wildlife habitat and grazing.

PROPOSED SURFACE DISTURBANCE: 260' x 150' with a pit included.

LOCATION OF EXISTING WELLS WITHIN A 1 MILE RADIUS: 5 proposed wells and 5 producing wells are within a 1 mile radius.

LOCATION OF PRODUCTION FACILITIES AND PIPELINES: Along roadways.

SOURCE OF CONSTRUCTION MATERIAL: Locally and transported in.

ANCILLARY FACILITIES: None.

WASTE MANAGEMENT PLAN:

Portable chemical toilets which will be emptied into the municipal waste treatment system; garbage cans on location will be emptied into centralized dumpsters which will be emptied into an approved landfill. Crude oil production is unlikely. Drilling fluid, completion / frac fluid and cuttings will be buried in the pit after evaporation and slashing the pit liner. Produced water will be gathered to the evaporation pit and eventually injected into the Navajo Sandstone via a salt-water disposal well. Used oil from drilling operations and support is hauled to a used oil recycler and reused.

ENVIRONMENTAL PARAMETERS

AFFECTED FLOODPLAINS AND/OR WETLANDS: Dry washes are typical throughout the area and immediate surroundings.

FLORA/FAUNA: Pinion Juniper, Sagebrush, rabbit brush, grasses, deer, small game, rodents, birds.

SOIL TYPE AND CHARACTERISTICS: Rocky sandy clay loam.

EROSION/SEDIMENTATION/STABILITY: Stable until disturbed.

PALEONTOLOGICAL POTENTIAL: None observed.

RESERVE PIT

CHARACTERISTICS: Dugout Earthen Pit.

LINER REQUIREMENTS (Site Ranking Form attached): Liner required.

SURFACE RESTORATION/RECLAMATION PLAN

As per surface use agreement.

SURFACE AGREEMENT: As per ZIONS Bank.

CULTURAL RESOURCES/ARCHAEOLOGY: On file with the State.

OTHER OBSERVATIONS/COMMENTS

- Access and pipelines along the roadway with the access continuing further south to another proposed Chevron USA well.
- No raptor issues (USFS).
- Big Game Winter Range (USFS).

ATTACHMENTS

Photos of this location were taken and placed on file.

Mark L. Jones	November 13, 2002 / 12:30 pm
DOGM REPRESENTATIVE	DATE/TIME

Evaluation Ranking Criteria and Ranking Score
For Reserve and Onsite Pit Liner Requirements

Site-Specific Factors	Ranking	Site Ranking
Distance to Groundwater (feet)		
>200	0	
100 to 200	5	
75 to 100	10	
25 to 75	15	
<25 or recharge area	20	0
Distance to Surf. Water (feet)		
>1000	0	
300 to 1000	2	
200 to 300	10	
100 to 200	15	
< 100	20	0
Distance to Nearest Municipal Well (feet)		
>5280	0	
1320 to 5280	5	
500 to 1320	10	
<500	20	0
Distance to Other Wells (feet)		
>1320	0	
300 to 1320	10	
<300	20	0
Native Soil Type		
Low permeability	0	
Mod. permeability	10	
High permeability	20	20
Fluid Type		
Air/mist	0	
Fresh Water	5	
TDS >5000 and <10000	10	
TDS >10000 or Oil Base Mud Fluid containing significant levels of hazardous constituents	15 20	0
Drill Cuttings		
Normal Rock	0	
Salt or detrimental	10	0
Annual Precipitation (inches)		
<10	0	
10 to 20	5	
>20	10	20
Affected Populations		
<10	0	
10 to 30	6	
30 to 50	8	
>50	10	0
Presence of Nearby Utility Conduits		
Not Present	0	
Unknown	10	
Present	15	0

Final Score 40 (Level I Sensitivity)

Sensitivity Level I = 20 or more; total containment is required.
Sensitivity Level II = 15-19; lining is discretionary.
Sensitivity Level III = below 15; no specific lining is required.

2002 11 13

2002 11 13

2002 11 13

004

Talon Resources, Inc.

Service, Quality and Accuracy

P.O. Box 1230
195 North 100 West
Huntington, Utah 84528
Phone: 435-687-5310

Cell: 435-650-1886
Fax: 435-687-5311
Email: talon@etv.net

December 5, 2002

Mr. Eric Jones
Petroleum Engineer
Bureau of Land Management
82 East Dogwood
Moab, Utah 84532

RE: Application for Permit to Drill—Chevron USA, Inc.
Zion's Federal 35-137, 2,031' FSL, 787' FEL, NE/4 SE/4
Section 35, T16S, R7E, SLB&M, Emery County, Utah

Dear Mr. Jones:

On behalf of Chevron USA, Inc, (Chevron), Talon Resources, Inc. respectfully submits the enclosed original and two copies of the *Application for Permit to Drill (APD)* for the above referenced well. The location of the well is no closer than 460' from the drilling unit boundary and should fulfill the requirements of R649-3-3 (General State Spacing). Included with the APD is the following supplemental information:

Exhibit "A" - Survey plats and layouts of the proposed well site;

Exhibit "B" - Proposed location maps with pipe, power, and road corridors;

Exhibit "C" - Drilling site layout;

Exhibit "D" - Onsite Inspection Checklist, 8 Point Drilling Program;

Exhibit "E" - Production Site Layout;

Exhibit "F" - Typical road cross-section;

Exhibit "G" - Typical BOP diagram;

Exhibit "H" - Typical wellhead manifold diagram.

RECEIVED
DEC 0 9 20
DIV. OF OIL, GAS & MINING

FILE COPY

Please accept this letter as Chevron's written request for confidential treatment of all information contained in and pertaining to this application, if said information is eligible for such consideration.

Thank you very much for your timely consideration of this application. Please feel free to contact myself, or Mr. Ron Wirth of Chevron at 435-748-5395 if you have any questions or need additional information.

Sincerely,

Don Hamilton

Don Hamilton
Agent for Chevron USA, Inc.

cc: Mr. Mike Kaminski, BLM-Price Field Office
Mr. Mark Jones, Oil, Gas and Mining
Mr. Bryant Anderson, Emery County
Mr. Ron Wirth, Chevron
Mr. Ian Kephart, Chevron
Mr. Gene Herrington, Chevron
Mrs. Julia Caldaro-Baird, Chevron
Chevron Well Files

Form 3160-3
(December 1990)

SUBMIT IN TRIPLICATE*
(Other instructions on reverse side)

Form approved.
Budget Bureau No. 1004-0136
Expires: December 31, 1991

UNITED STATES
DEPARTMENT OF THE INTERIOR
BUREAU OF LAND MANAGEMENT

001

APPLICATION FOR PERMIT TO DRILL OR DEEPEN

5. LEASE DESIGNATION AND SERIAL NO.: UTU-73085

6. IF INDIAN, ALLOTTEE OR TRIBE NAME: N/A

7. UNIT AGREEMENT NAME: N/A

8. FARM OR LEASE NAME, WELL NO.: Zion's Federal 35-137

9. API WELL NO.: 43-015-30587

10. FIELD AND POOL, OR WILDCAT: Undesignated

11. SEC., T., R., M., OR BLK. A: NE/4 SE/4, Section 35, T16S, R7E, SLB&M

1a. TYPE OF WORK: DRILL [X] DEEPEN [ ]

b. TYPE OF WELL: OIL WELL [ ] GAS WELL [X] OTHER SINGLE ZONE [X] MULTIPLE ZONE [ ]

2. NAME OF OPERATOR: Chevron USA, Inc.

3. ADDRESS AND TELEPHONE NO.: P.O. Box 618, Orangeville, Utah 84537; 435-748-5395

4. LOCATION OF WELL (Report location clearly and in accordance with any State requirements.*)
At surface / At proposed prod. zone: 2,031' FSL, 787' FEL 4359509 Y 39.386090 491527 X -111.09839

14. DISTANCE IN MILES AND DIRECTION FROM NEAREST TOWN OR POST OFFICE*: 8.3 miles northwest of Huntington, Utah

12. COUNTY OR PARISH: Emery

13. STATE: Utah

15. DISTANCE FROM PROPOSED* LOCATION TO NEAREST PROPERTY OR LEASE LINE, FT. (Also to nearest drlg. unit line, if any): 597'

16. NO. OF ACRES IN LEASE: 440

17. NO. OF ACRES ASSIGNED TO THIS WELL: 160 acres

18. DISTANCE FROM PROPOSED LOCATION TO NEAREST WELL, DRILLING, COMPLETED, OR APPLIED FOR, ON THIS LEASE, FT.: 2,700'

19. PROPOSED DEPTH: 4,440'

20. ROTARY OR CABLE TOOLS: Rotary

21. ELEVATIONS (Show whether DF, RT, GR, etc.): 6,660' GR

22. APPROX. DATE WORK WILL START*: May 2003

23. PROPOSED CASING AND CEMENTING PROGRAM

SIZE OF HOLE	GRADE, SIZE OF CASING	WEIGHT PER FOOT	SETTING DEPTH	QUANTITY OF CEMENT
12-1/4"	8-5/8" K-55 ST&C	24	300'	230 sacks Class G cement + 2% $CaCl_2$ + 0.25 pps cellophane flakes
7-7/8"	5-1/2" N-80 LT&C	17	4,340'	135 sacks 10:1 RFC Class G cement + 0.25 pps cellophane flakes

Surface Owner: **Zion's Bank—P.O. Box 30880, Salt Lake City, Utah 84130**
Surface Representative: **Kurt Froerer 1-801-594-8332**

Federal Bond Number: **S 304604**
Fee Bond Number: **6027949**

RECEIVED
DEC - 9 2002
DIV OF OIL, GAS & MINING

CONFIDENTIAL

IN ABOVE SPACE DESCRIBE PROPOSED PROGRAM: If proposal is to deepen, give data present productive zone and proposed new productive zone. If proposal is to drill or deepen directionally, give pertinent data on subsurface locations and measured and true vertical depths. Give blowout preventer program, if any.

24.

SIGNED Don Hamilton Don Hamilton TITLE Agent for Chevron DATE 12-5-2002

(This space for Federal or State office use)

PERMIT NO. 43-015-30587 APPROVAL DATE

Federal Approval of this Action is Necessary

Application approval does not warrant or certify that the applicant holds legal or equitable title to those rights in the subject lease which would entitle the applicant to conduct operations thereon.
CONDITIONS OF APPROVAL, IF ANY:

APPROVED BY TITLE BRADLEY G. HILL ENVIRONMENTAL SCIENTIST III DATE 04-21-03

***See Instructions On Reverse Side**

Title 18 U.S.C. Section 1001, makes it a crime for any person knowingly and willfully to make to any department or agency or the

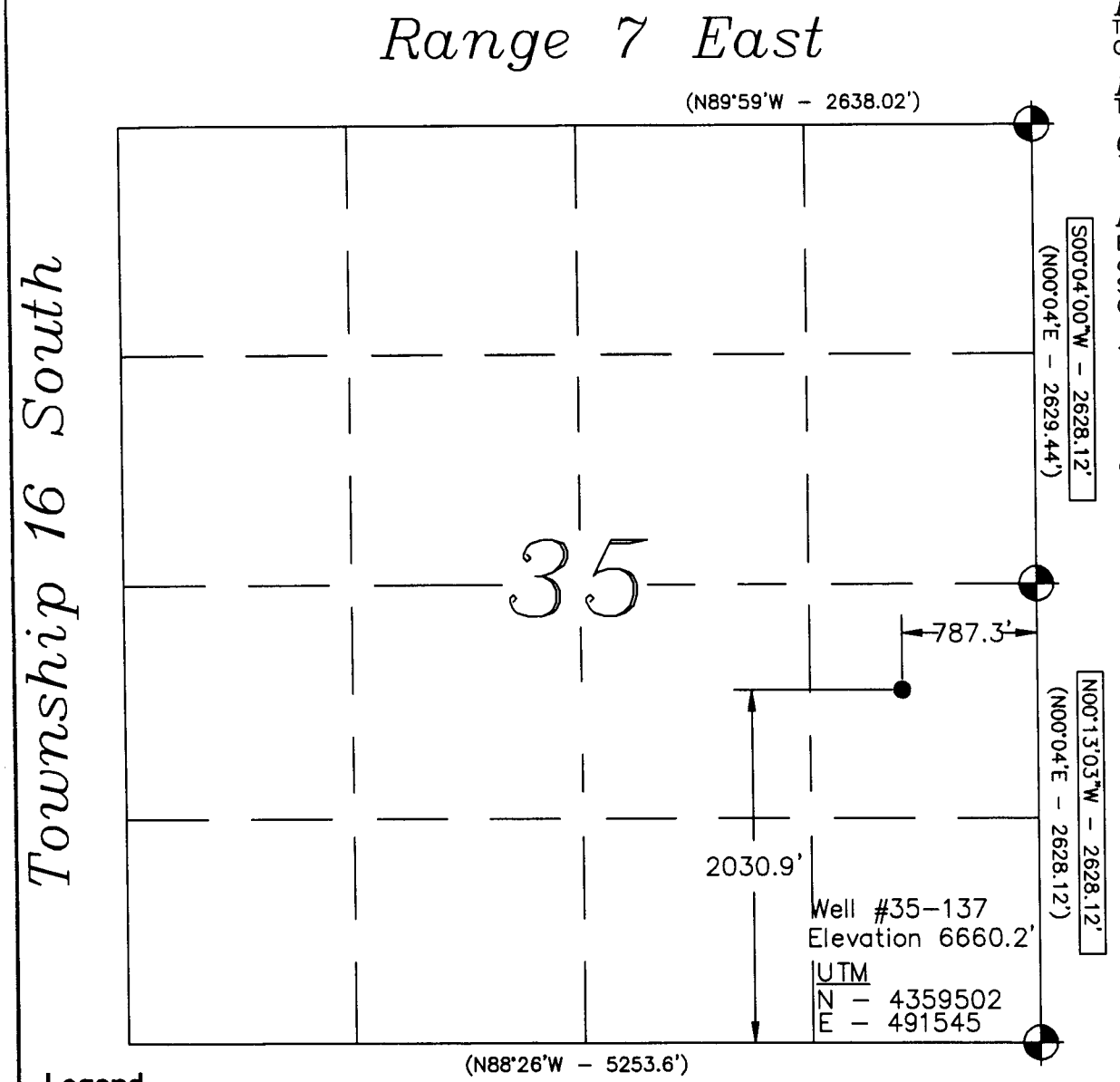

Legend

- ● Drill Hole Location
- ⊕ Brass Cap (Found)
- ○ Brass Cap (Searched for, but not found)
- △ Calculated Corner
- ( ) GLO
- GPS Measured

NOTE:
UTM and Latitude / Longitude Coordinates are derived using a GPS Pathfinder and are shown in NAD 27 Datum.

Lat / Long
39°23'13"
111°05'53"

Location:
The well location was determined using a Trimble 4700 GPS survey grade unit.

Basis of Bearing:
The Basis of Bearing is GPS Measured.

GLO Bearing:
The Bearings indicated are per the recorded plat obtained from the U.S. Land Office.

Basis of Elevation:
Basis of Elevation of 6395.0' being at the Southeast Section corner of Section 36, Township 16 South, Range 7 East, Salt Lake Base & Meridian, as shown on the Red Point Quadrangle 7.5 Minute Series Map.

Description of Location:
Proposed Drill Hole located in the NE 1/4, SE 1/4 of Section 35; being 2030.9' North and 787.29' West from the Southeast Corner of Section 35, T16S., R7E., Salt Lake Base and Meridian.

Surveyor's Certificate:
I, Albert J. Spensko, a Registered Professional Land Surveyor, holding Certificate 146652 State of Utah, do hereby certify that the information on this drawing is a true and accurate survey based on data of record and was conducted under my personal direction and supervision as shown hereon.

Registered Land Surveyor
12-06-0
No. 146652
Albert J. Spensko
State of Utah

GRAPHIC SCALE
0 500' 1000'
(IN FEET)
1 inch = 1000 ft.

TALON RESOURCES, INC.
Price - Huntington, Utah
Phone (435)637-8781 Fax (435)636-8603
E-Mail talon@castlenet.com

ChevronTexaco

WELL #35-137
Section 35, T16S., R7E., S.L.B.&M.
Emery County, Utah

Drawn By: J. STANSFIELD	Checked By: L.W.J./A.J.S.
Drawing No. A-1	Date: 08/21/02
	Scale: 1" = 1000'
Sheet 1 of 4	Job No. 490

Bureau of Land Management
Moab District / Price Field Office
Application for Permit to Drill
On-Site Inspection Checklist

Company: Chevron USA, Inc. Well No.: Zion's Federal 35-137

Location: *Section 35, T16S, R7E SLB & M*

Lease No.: *Federal UTU-73085*

On-Site Inspection Date: 11-13-02

B. THIRTEEN POINT SURFACE USE PLAN

The dirt contractor will be provided with an approved copy of the surface use plan of operations before initiating construction.

1. Existing Roads:

a. Proposed route to location: *From Huntington, Utah proceed northwest along SR-31 for approximately 7.5 miles. Turn left off of SR-31 just past the plant onto County Road 304 (Deer Creek Road). Just past the substation approximately 0.3 miles southwest of the intersection with SR-31 turn right onto the gravel road. Follow the gravel road around the pond and past the existing 36-138 well. From this well travel southwest approximately 2,100' to the proposed well Zion's Federal 35-137at the mouth of Meetinghouse Canyon (See Exhibit "B").*

b. Location of proposed well in relation to town or other reference point: *Approximately 8.3 miles northwest of Huntington, UT.*

c. Contact the County Road Department for use of county roads. The use of Emery County roads will require an encroachment permit from the Emery County Road Department.: *Encroachment permit is presently in place for County Road #304 (Deer Creek Road)*

d. Plans for improvement and/or maintenance of existing roads: *Approximately 2,100' of two-track access will be improved from the 36-138 to the proposed well site.*

e. Other:

2. Planned Access Roads:

a. Location (centerline): *From the existing well 36-138 continue southwest along the flagged existing two-track route to the proposed well site. Planned access begins at a point approximately 1,650' FNL, 850' FWL, Section 36, T16S, R7E.*

b. Length of new access to be constructed: *None*

c. Length of existing roads to be upgraded: *2,100'*

d. Maximum total disturbed width: *60'*

e. Maximum travel surface width: *25'*

f. Maximum grades: *10%*

g. Turnouts: *None*

h. Surface materials: *Native*

i. Drainage (crowning, ditching, culverts, etc): *Roads will be crowned with bar ditches on both sides with approximately 2 culverts placed along the upgraded road.*

i. Cattleguards: *No cattleguards will be needed, Additional gates will be installed if required by the landowner representative*

k. Length of new and/or existing roads which lie outside the lease boundary for which a BLM right-of-way is required: *450' across lease UTU-73872*

l. Other:

Surface disturbance and vehicular travel will be limited to the approved location access road. Any additional area needed must be approved by the Area Manager in advance.

Since a right-a-way is necessary, no surface disturbing activities shall take place on the subject right-of-way until the associated APD is approved. The holder will adhere to conditions of approval in the Surface Use Program of the approved APD, relevant to any right-of-way facilities.

If a right-of-way is secured, boundary adjustments in the lease or unit shall automatically amend this right-of-way to include that portion of the facility no longer contained within the lease or unit. In the event of an automatic amendment to this right-of way grant, the prior on-lease/unit conditions of approval of this facility will not be affected even though they would now apply to facilities outside of the lease/unit as a result of a boundary adjustment. Rental fees, if appropriate shall be recalculated based on the conditions of this grant and the regulations in effect at the time of an automatic amendment.

If the well is productive, the access road will be rehabilitated or brought to Resource (Class III) Road standards within 60 days of dismantling the rig. If upgraded, the access road must be maintained at these standards until the well is properly abandoned. If this time frame cannot be met, the Area Manager will be notified so that temporary drainage control can be installed along the access road.

3. Location of Existing Wells - on a map, show the location of all water, injection, disposal, producing and drilling wells within a one mile radius of the proposed well, and describe the status of each: *See Exhibit "B"*

4. Location of Production Facilities:

a. On-site facilities: *See Exhibit "E"*

b. Off-site facilities: *None except for the power line and pipelines*

c. Pipelines: *Approximately 2,100' of pipeline corridor containing 2 (gas and water) 4" to 8" pipelines will be installed along the south side of the proposed road.*

d. Power lines: *Approximately 2,100' of power line corridor containing one 3-phase power line will be installed along the north side of the proposed road.*

All permanent (in place for six months or longer) structures constructed or installed (including oil well pump jacks) will be painted a flat, nonreflective color to match the standard environmental colors, as determined by the Rocky Mountain Five-State Interagency Committee. All facilities will be painted within six months of installation. Facilities required to comply with the Occupational Safety and Health Act (OSHA) may be excluded. Colors will be as follows: *olive black*

All site security guidelines identified in 43 CFR 3163.7-5 and Onshore Oil and Gas Order No. 3 Colors will be as follows: *olive black*

If a gas meter run is constructed, it will be located on lease within 500 feet of the wellhead. The gas flowline will be buried from the wellhead to the meter and will be buried downstream of the meter until it leaves the pad. Meter runs will be housed and/or fenced. The gas meter shall be calibrated prior to first sales and shall be calibrated quarterly thereafter. All gas production and measurement shall comply with the provisions of 43 CFR 3162. 7-3, Onshore Oil and Gas Order No. 5, and American Gas Association (AGA) Report No. 3.

If a tank battery is constructed on this lease, it will be surrounded by a dike of sufficient capacity to contain 1 ½ times the storage capacity of the largest tank. All loading lines and valves will be placed inside the berm surrounding the tank battery. All oil production and measurement shall conform to the provisions of 43 CFR 3162.7-3 and Onshore Oil and Gas Order No. 4.

Production facilities on location may include a lined or unlined produced water pit. If water is produced from the well, an application must be submitted.

5. Location and Type of Water Supply:

All water needed for drilling purposes will be obtained from (describe location and/or show on A map): *All water needed for drilling will be obtained from a local municipal water source, Since this well will be primarily drilled with air, minimal water will be needed.*

6. Source of Construction Material:

Pad construction material will be obtained from (if the source is Federally owned, show location on a map): *Private Owner in Huntington Canyon*

The use of materials under BLM jurisdiction will conform to 43 CFR 3610.2-3.

Any gravel used will be obtained from a state approved gravel pit.

7. Methods of Handling Waste Disposal:

Describe the methods and locations proposed for safe containment and disposal of waste material, e.g. cuttings, produced water, garbage, sewage, chemicals, etc.

The reserve pit will be located: *Inbound and along the southeast side of the pad.*

The reserve pit will be constructed so as not to leak, break, or allow discharge.

The reserve pit will be lined with native material unless designated otherwise by BLM officers prior to construction. Pit walls will be sloped no greater than 2 to 1.

The reserve pit shall be located in cut material, with at least 50% of the pit volume being below original ground level. Three sides of the reserve pit will be fenced before drilling starts. The

fourth side will be fenced as soon as drilling is completed, and shall remain until the pit is dry. As soon as the reserve pit has dried, all areas not needed for production will be rehabilitated.

Trash must be contained in a trash cage and hauled away to an approved disposal site as necessary but no later than at the completion of drilling operations.

8. Ancillary Facilities: Garbage Containers and Portable Toilets

9. Well Site Layout - The pit, rig, cut and fill, topsoil, etc. on a plat with a scale of at least 1" = 50'.

All well, whether drilling, producing, suspended, or abandoned, will be identified in accordance with 43 CFR 3162.6.

Access to the well pad will be from: *Northwest.*

The blooie line will be located: *At least 100 feet from the well head.*

To minimize the amount of fugitive dust and spray escaping from the blooie pit, the following blooie line deflection method will be employed: *Water Injection.*

10. Plans for Restoration of the Surface:

The top 6 inches of topsoil material will be removed from the location and stockpiled separately on: *Adjacent undisturbed land in a windrow fashion.*

Topsoil along the access road will be reserved in place adjacent to the road.

Immediately upon completion of drilling, all equipment that is not necessary for production shall be removed.

The reserve pit and that portion of the location not needed for production will be reclaimed.

Before any dirt work to restore the location takes place, the reserve pit must be completely dry.

Reclaimed roads will have the berms and cuts reduced and will be closed to vehicle use.

All disturbed areas will be re-contoured to replicate the natural slope.

The stockpiled topsoil will be evenly distributed over the disturbed area.

Prior to reseeding, all disturbed areas, including the access roads, will be scarified and left with a rough surface.

Seed will be broadcast or drilled between Sept. and Nov., or at a time specified by the BLM. If broadcast, a harrow or some other implement will be dragged over the seeded area to assure seed coverage.

The following seed mixture will be used: *BLM-recommended mixture.*

The abandonment marker will be one of the following, as specified by BLM:

1) at least four feet above ground level,
2) at restored ground level, or
3) below ground level.

In any case the marker shall be inscribed with the following: operator name, lease number, Well name and surveyed description (township, range, section and either quarter-quarter or footage.).

11. Surface and Mineral Ownership:

Surface Owner:	**Zion's Bank—P.O. Box 30880, Salt Lake City, Utah 84130**
Surface Representative:	**Kurt Froerer 1-801-594-8332**
Mineral Ownership:	**Federal; Bureau of Land Management**

12. Other Information:

a. Archeological Concerns: *None that the operator is aware of.*

The operator is responsible for informing all persons in the area who are associated with this project that they will be subject to prosecution for knowingly disturbing historic or archaeological sites, or for collecting artifacts. If historic or archaeological materials are uncovered during construction, the operator is to immediately stop work That might further disturb such materials, and contact the authorized officer (AO). Within five (5) working days, the AO will inform the operator as to:

1. whether the materials appear eligible for the National Register of Historic Places;

2. the mitigation measures the operator will likely have to undertake before the site can be used (assuming in situ preservation is not necessary); and

3. a time frame for the AO to complete an expedited review under 36 CFR 800.11 to confirm, through the State Historic Preservation Officer, that the findings of the AO are correct and that mitigation is appropriate.

If the operator wishes, at any time, to relocate activities to avoid the expense of mitigation and/or the delays associated with this process, the AO will assume responsibility for whatever recordation and stabilization of the exposed materials may be required. Otherwise, the operator will be responsible for mitigation costs. The AO will provide technical and procedural guidelines for the conduct of mitigation. Upon verification from the AO that the required mitigation has been completed, the operator will then be allowed to resume construction.

b. Threatened and Endangered Species Concerns: *None that the operator is aware of.*

c. Wildlife Seasonal Restrictions (yes/no): *See Environmental Impact Statement (EIS)*

d. Off Location Geophysical Testing: *N/A*

e. Drainage crossings that require additional State or Federal approval: *None*

f. Other:

13. Lessee's or Operator's Representative and Certification

Representative: Chevron USA, Inc.

Name: Ron Wirth – Operations Supervisor

Address: P.O. Box 618
Orangeville, Utah 84537

Phone No: 435-748-5395

Certification:

I hereby certify that I, or persons under my direct supervision, have inspected the proposed drill site and access route; that I am familiar with the conditions which currently exists; that the statements made in this APD package are, to the best of my knowledge, true and correct; and that the work associated with the operations proposed herein will be performed by Chevron and its contractors and subcontractors in conformity with this APD package and the terms and conditions under which it is approved. I also certify responsibility for the operations conducted on that portion of the leased lands associated with this application, with bond coverage being provided under Chevron's BLM bond. This statement is subject to the provisions of 18 U.S.C. 1001 for the filing of a false statement.

Signature: Don Hamilton Date: 12-5-02

C. REQUIRED APPROVALS, REPORTS AND NOTIFICATIONS

Required verbal notifications are summarized in Table 1, attached.

Building Location - Contact the Resource Area, Natural Resource Protection Specialist at least 24 hours prior to commencing construction of location.

Spud - The spud date will be reported to the Resource Area Office 24 hours prior to spudding. Written notification in the form of a Sundry Notice (Form 3160-5) will be submitted the District Office within 24 hours after spudding, regardless of whether spud was made with a dry hold digger or big rig.

Daily Drilling Reports - Daily drilling reports shall detail the progress and status of the well and shall be submitted to the District Office on a weekly basis.

Monthly Reports of Operations - In accordance with Onshore Oil and Gas Order No. 1, this well shall be reported on Minerals Management Service (MMS) Form 3160, "Monthly Report of Operations," starting the month in which operations commence and continuing each month until the well is physically plugged and abandoned. This report will be filed directly with MMS.

Sundry Notices - There will be no deviation from the proposed drilling and/or workover program without prior approval from the Assistant District Manager. "Sundry Notices and Reports on Wells: (Form 3160-5) will be filed for approval for all changes of plans and other operations in accordance with 43 CFR 3162.3-2. Safe drilling and operating practices must be observed.

Drilling suspensions - Operations authorized by this permit shall not be suspended for more than 30 days without prior approval of the Authorized Officer. All conditions of this approval shall be applicable during any operations conducted with a replacement rig.

Undesirable Events - Spills, blowouts, fires, leaks, accidents, or any other unusual occurrences shall be immediately reported to the Resource Area in accordance with requirements of NTLA.

Cultural Resources - If cultural resources are discovered during construction, work that might disturb the resources is to stop, and the Area Manager is to be notified.

First production - Should the well be successfully completed for production, the Assistant District Manager, Minerals Division will be notified when the well is placed in producing status. Such notification may be made by phone, but must be followed by a sundry notice or letter not later than five (5) business days following the date on which the well is placed into production.

A first production conference will be scheduled as soon as the productivity of the well is apparent. This conference should be coordinated through the Resource Area Office. The Resource Area Office shall be notified prior to the first sale.

Well Completion Report - Whether the well is completed as a dry hole or as a producer, "Well Completion and Re-completion Report and Log" (Form 3160-4) will be submitted to the District Office not later than thirty (30) days after completion of the well or after completion operations being performed, in accordance with 43 CFR 3162.4-1. Two copies of all logs, core descriptions, core analysis, well test data, geologic summaries, sample description, and all other surveys or data obtained and compiled during the drilling, workover, and/or completion operations, will be filed with Form 3160-4. Samples (cuttings and/or samples) will be submitted when requested by the Assistant District Manager.

Venting/Flaring of Gas - NTL-4A allows venting/flaring of gas during the initial well evaluation period not to exceed 30 days or 50 Mmcf. Venting/flaring beyond the initial test period threshold must be approved by the District Office.

Produced Water - Produced waste water may be confined to an unlined pit for a period not to exceed 90 days after initial production. During the 90 day period, an application for approval of a permanent disposal method and location, along with the required water analysis, will be submitted to the Assistant District Manager for approval.

Off-Lease Measurement, Storage, Commingling - Prior approval must be obtained from the Assistant District Manager for off-lease measurement, off-lease storage and/or commingling (either down-hole or at the surface).

Plugging and Abandonment - If the well is completed as a dry hole, plugging instructions must be obtained from the BLM, Moab District Office prior to initiating plugging operations. Table 1 of this document provides the after-hours phone numbers of personnel who are authorized to give plugging instructions.

A "Subsequent Report of Abandonment" (Form 3160-5) will be filed with the Assistant District Manager, Minerals Divisions within thirty (30) days following completion of the well for abandonment. This report will indicate where plugs were placed and the current status of surface restoration. Upon completion of approved plugging, a regulation marker will be erected in accordance with 43 CFR 3162.6. Final abandonment will not be approved until the surface reclamation work required by the approved APD or approved abandonment notice has been completed to the satisfaction of the Area Manager or his representative, or the appropriate surface managing agency.

TABLE 1
NOTIFICATIONS

Notify Michael Kaminski of the Price Resource Area, at (435) 636-3646 for the following:

2 days prior to commencement of dirt work construction or reclamation;

1 day prior to spudding

50 feet prior to reaching surface and intermediate casing depths;

3 hours prior to testing BOPE;

12 hours prior to reaching kickoff point depth (if applicable).

If the person at the above number cannot be reached, notify the Moab District Office at (435) 259-6111. If unsuccessful, notify one of the people listed below.

Well abandonment operations require 24 hour advance notice and prior approval. In the case of newly drilled dry holes, verbal approval can be obtained by calling the Moab District Office, Branch of Fluid Minerals at (435) 259-6111. If approval is needed after work hours, you may contact the following:

Eric Jones, Petroleum Engineer	Office: (435) 259-6111 Home: (435) 259-2214

8 Point Drilling Program

Attached to BLM Form 3
Chevron USA, Inc.
Zion's Federal 35-137
NE/4 SE/4, Sec. 35, T16S, R7E, SLB & M
2,031' FSL, 787' FEL
Emery County, Utah

1. The Geologic Surface Formation

   Blue Gate Shale Member of the Mancos Shale

2. Estimated Tops of Important Geologic Markers

Marker	SL	MD
Ferron Top	3,390'	2,670'

3. Projected Gas & H2O zones (Ferron Formation)

   Coals and sandstones – 2,670' – 4,340'

   No groundwater is expected to be encountered.

   Casing & cementing will be done to protect potentially productive hydrocarbons, groundwater resources, lost circulation zones, abnormal pressure zones, and prospectively valuable mineral deposits. All indications of usable water will be reported.

   Surface casing will be tested to 1000 psi.

4. The Proposed Casing and Cementing Programs

HOLE SIZE	SETTING DEPTH (INTERVAL)	SIZE (OD)	WEIGHT,GRADE & JOINT	CONDITION
12–1/4"	300'	8-5/8"	24# K-55 ST&C	New
7-7/8"	4,340'	5-1/2"	17# N-80 LT&C	New

CONFIDENTIAL

Cement Program -**Every attempt will be made to bring cement back to surface.**

Surface Casing: 230 sacks G + 2 % $CaCl_2$ + 0.25 pps cellophane flakes;
Weight: 15.8 #/gal
Yield: 1.16 cu.ft/sk

Production Casing: 135 sacks 10:1 RFC Class G cement + 0.25 pps cellophane flakes;
Weight: 14.2 #/gal,
Yield: 1.62 cu.ft/sk yield.

The following shall be entered in the driller's log:

1) Blowout preventer pressure tests, including test pressures and results;

2) Blowout preventer tests for proper functioning;

3) Blowout prevention drills conducted;

4) Casing run, including size, grade, weight, and depth set;

5) How the pipe was cemented, including amount of cement, type, whether cement circulated, location of the cementing tools, etc.;

6) Waiting on cement time for each casing string;

7) Casing pressure tests after cementing, including test pressures and results.

5. The Operator's Minimum Specifications for Pressure Control

Exhibit "G" is a schematic diagram of the blowout preventer equipment. A double gate 3000 psi BOP will be used with a rotating head. This equipment will be tested to 2000 psi. All tests will be recorded in a Driller's Report Book. Physical operation of BOP's will be checked on each trip.

6. The Type and Characteristics of the Proposed Circulating Muds

0-300	12-1/4" hole	Drill with air, will mud-up if necessary.
300-TD	7-7/8" hole	Drill with air. 400 psi @ 1500-1800 Scf.

CONFIDENTIAL

7. The Testing, Logging and Coring Programs are as followed

300-TD Gamma Ray, Density, Neutron Porosity, Induction, Caliper

Any Anticipated Abnormal Pressures or Temperatures

No abnormal pressures or temperatures have been noted or reported in wells drilled in the area nor at the depths anticipated in this well. Bottom hole pressure expected is approximately 1000 psi max. No hydrogen sulfide or other hazardous gases or fluids have been found, reported or are known to exist at these depths in the area.

8. Anticipated Starting Date and Duration of the Operations.

The well will be drilled approx.: May 2003.

Verbal and/or written notifications listed below shall be submitted in accordance with instructions from the Bureau of Land Management and Division of Oil, Gas & Mining:

(a) prior to beginning construction;

(b) prior to spudding;

(c) prior to running any casing or BOP tests;

(d) prior to plugging the well, for verbal plugging instructions.

Spills, blowouts, fires, leaks, accidents or other unusual occurrences shall be reported to the Bureau of Land Management and Division of Oil, Gas & Mining immediately.

CONFIDENTIAL

ELEVATION OF UNGRADED GROUND AT LOCATION STAKE = 6660.2'
ELEVATION OF GRADED GROUND AT LOCATION STAKE = 6659.7'

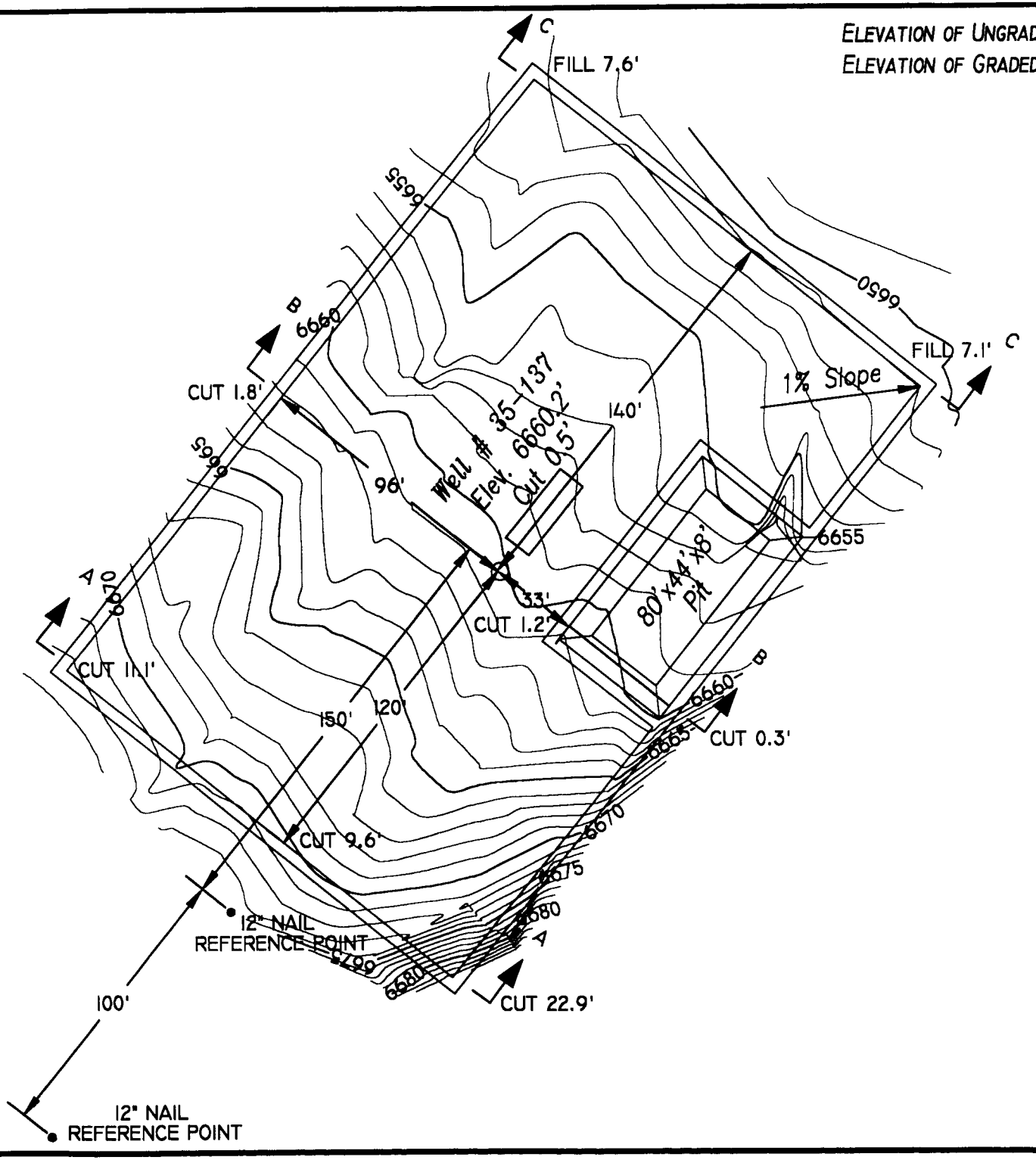

TALON RESOURCES, INC.

Price - Huntington, Utah
Phone (435)637-8781 Fax (435)636-8603
E-Mail talonecast@net.com

LOCATION LAYOUT

Section 35, T16S, R7E, S.L.B.&M.

WELL # 35-137

Drawn By: T. DAVIS	Checked By: L.W.J.
Drawing No. A-2	Date: 8/27/02
	Scale: 1" = 50'
Sheet 2 of 4	Job No. 484

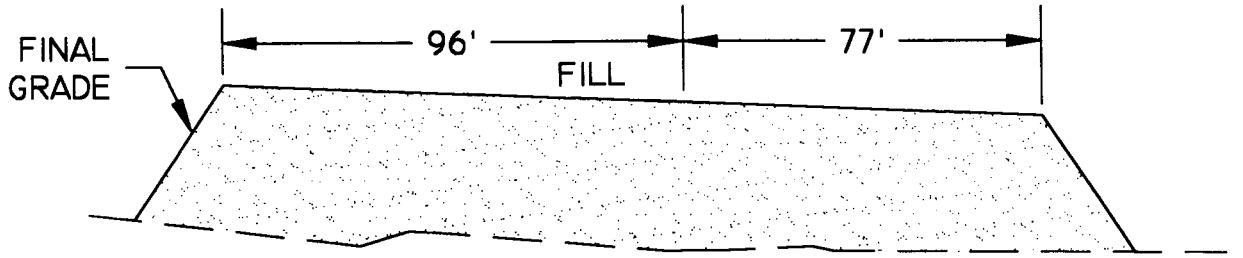

VIEW C-C

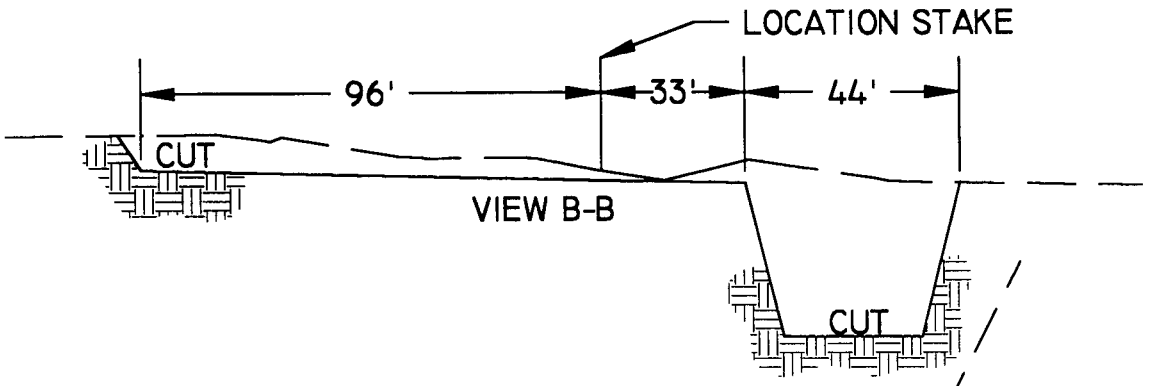

VIEW B-B

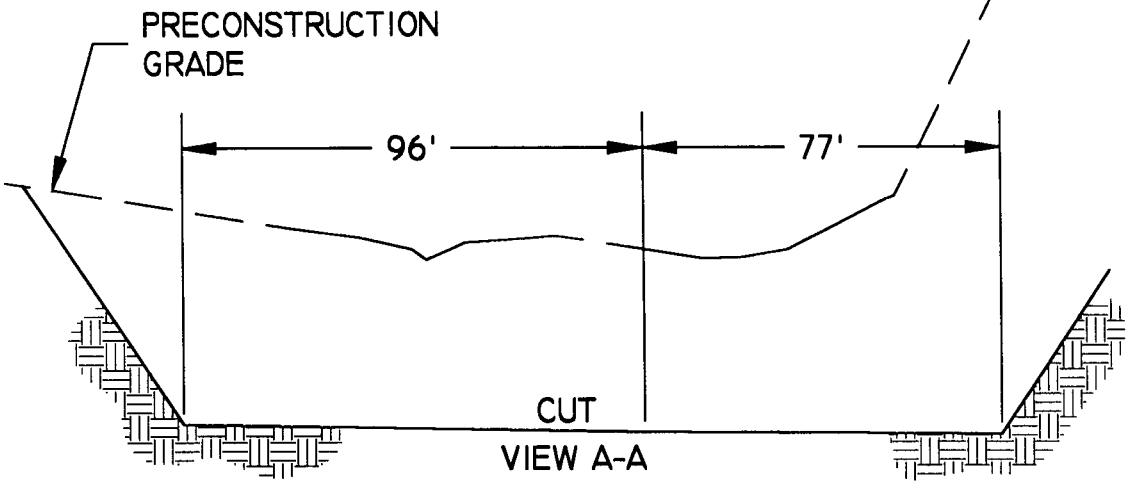

VIEW A-A

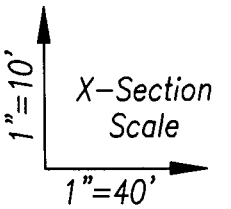

SLOPE = 1 1/2 : 1
(EXCEPT PIT)
PIT SLOPE = 1 ; 1

APPROXIMATE YARDAGES

CUT
(6")TOPSOIL STRIPPING = 750 CU. YDS.
REMAINING LOCATION = 4970 CU, YDS.
TOTAL CUT = 5840 CU. YDS.
TOTAL FILL = 3365 CU. YDS.

TALON RESOURCES, INC.
Price - Huntington, Utah
Phone (435)637-8781 Fax (435)636-8603
E-Mail talonecastlenet.com

ChevronTexaco

TYPICAL CROSS SECTION
Section 35, T16S, R7E, S.L.B.&M.
WELL # 35-137

Drawn By: T. DAVIS	Checked By: L.W.J.
Drawing No. C-1	Date: 8/27/02
	Scale: 1" = 40'
Sheet 3 of 4	Job No. 484

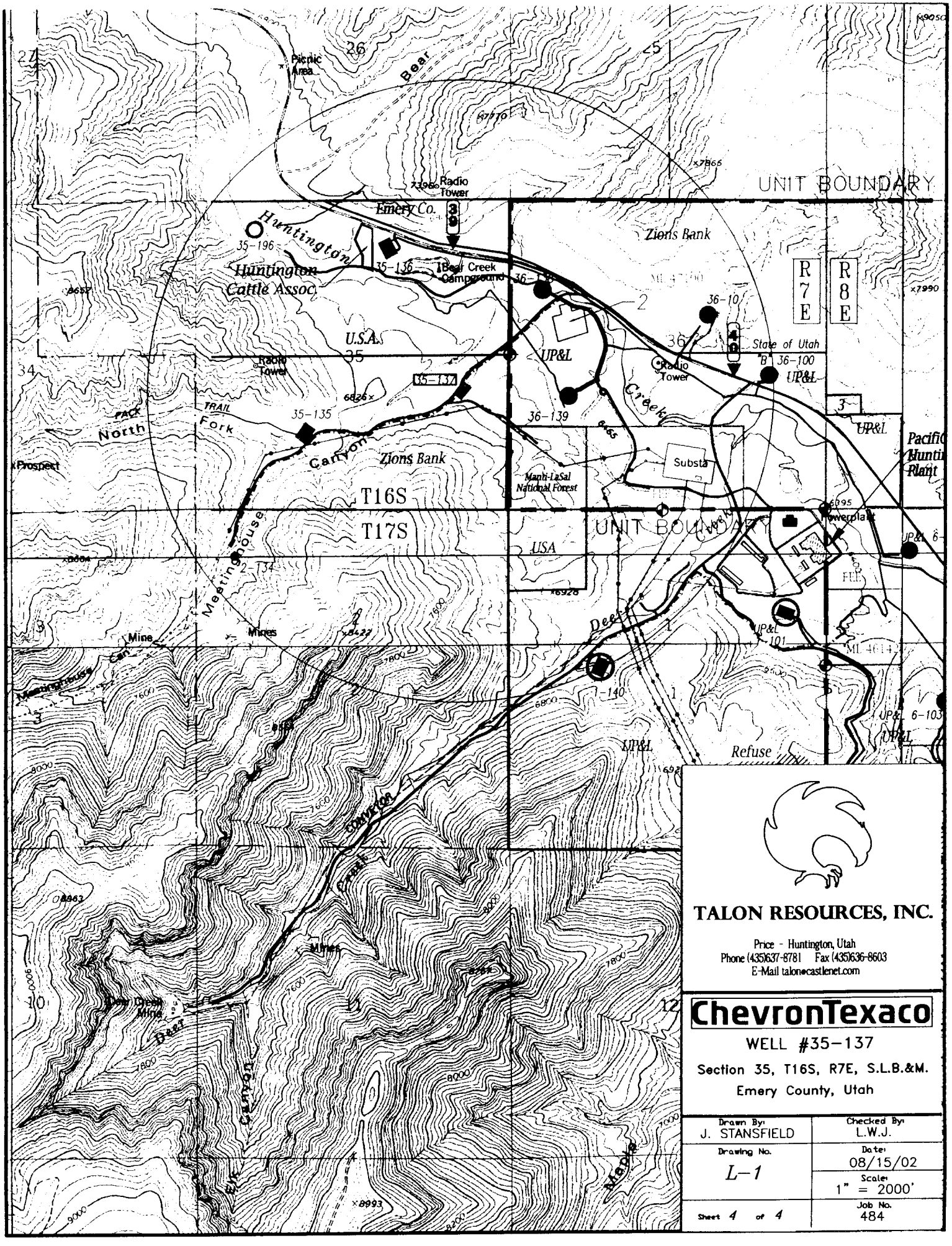

TALON RESOURCES, INC.

Price - Huntington, Utah
Phone (435)637-8781 Fax (435)636-8603
E-Mail talon@castlenet.com

ChevronTexaco

WELL #35-137

Section 35, T16S, R7E, S.L.B.&M.

Emery County, Utah

Drawn By: J. STANSFIELD	Checked By: L.W.J.
Drawing No. L-1	Date: 08/15/02
	Scale: 1" = 2000'
Sheet 4 of 4	Job No. 484

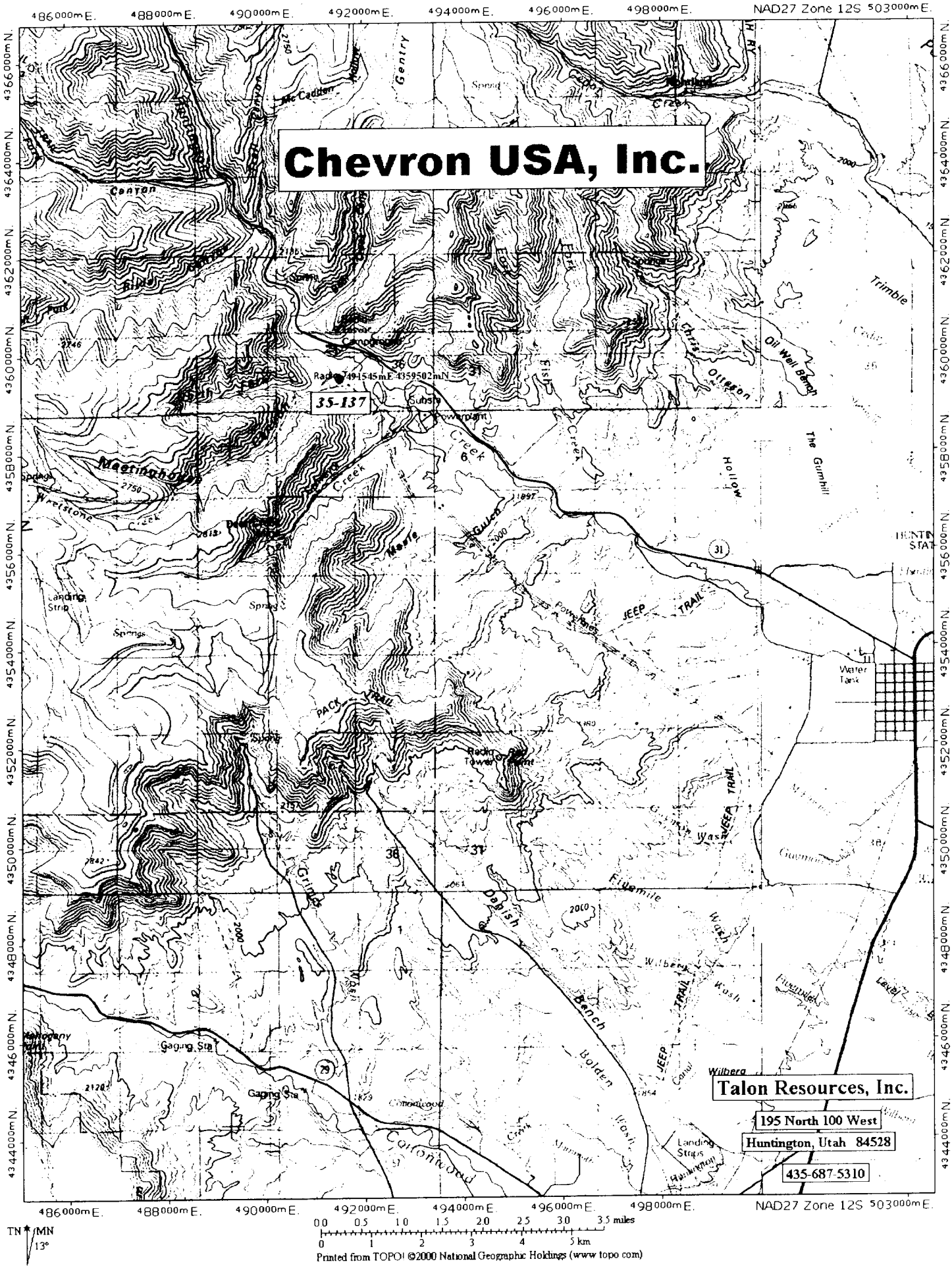
Chevron USA, Inc.
35-137
Talon Resources, Inc.
195 North 100 West
Huntington, Utah 84528
435-687-5310
NAD27 Zone 12S
Trimble
Oil Well Bench
The Gumhill
Water Tank
JEEP TRAIL
PACK TRAIL
Fluemile
Bench
Bolden
Cottonwood
Gaging Sta
Landing Strip
Wilberg
Huntington
TN MN
13°
0 0.5 1.0 1.5 2.0 2.5 3.0 3.5 miles
0 1 2 3 4 5 km
Printed from TOPO! ©2000 National Geographic Holdings (www.topo.com)

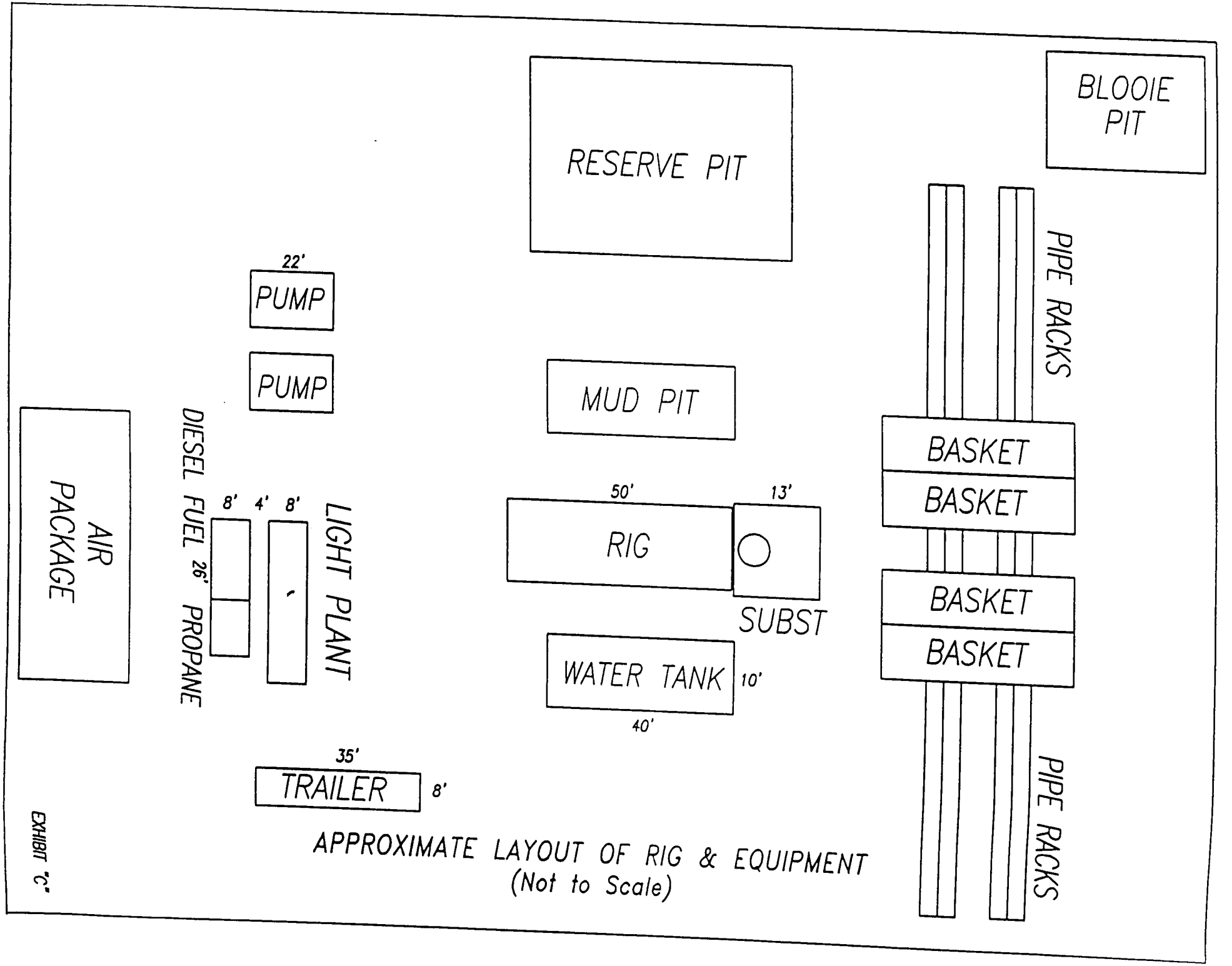

APPROXIMATE LAYOUT OF RIG & EQUIPMENT
(Not to Scale)

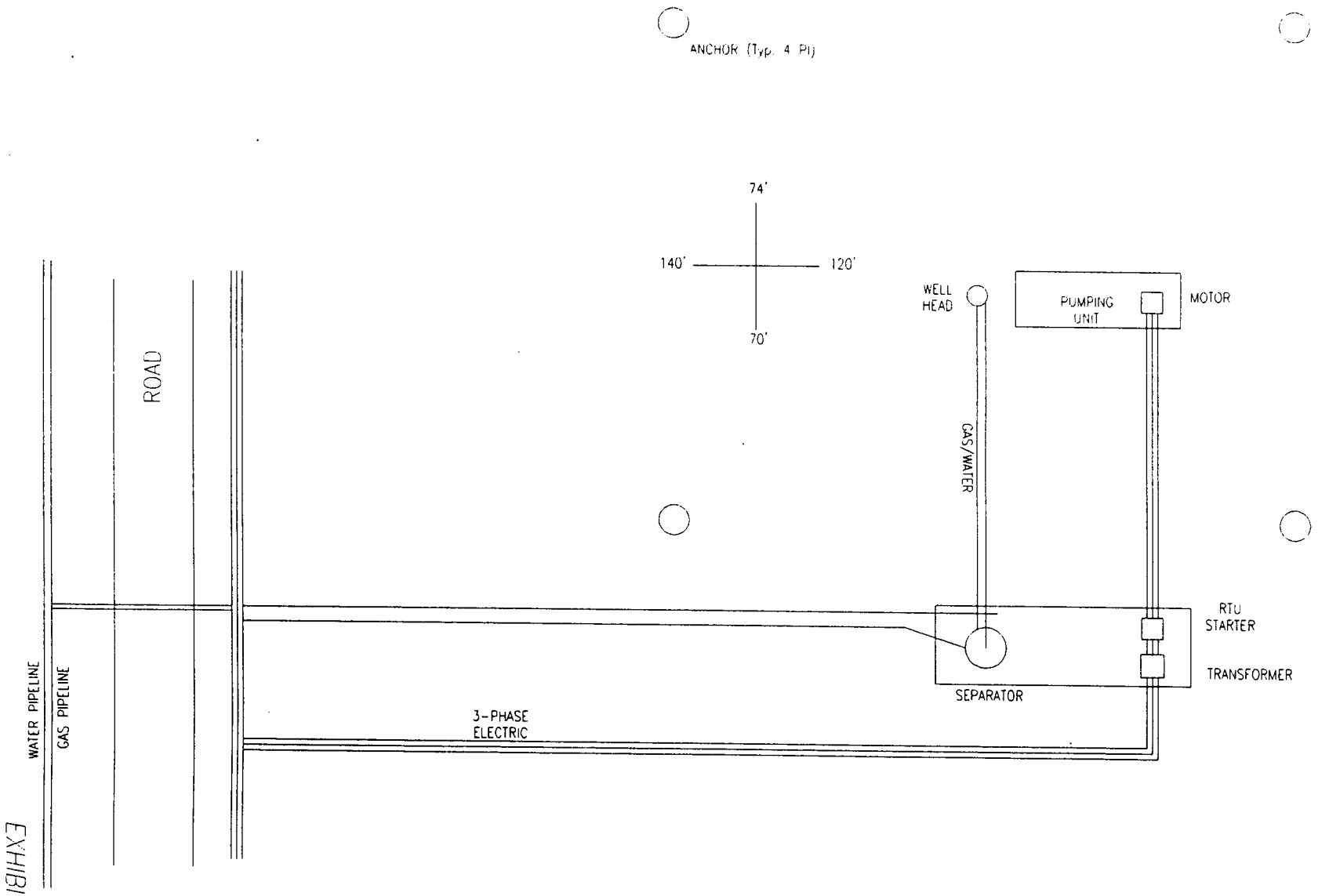

EXHIBIT "E"

TEXACO EXPLORATION & PRODUCTION
WELL SITE LAYOUT
260' X 144'

TYPICAL ROAD CROSS-SECTION

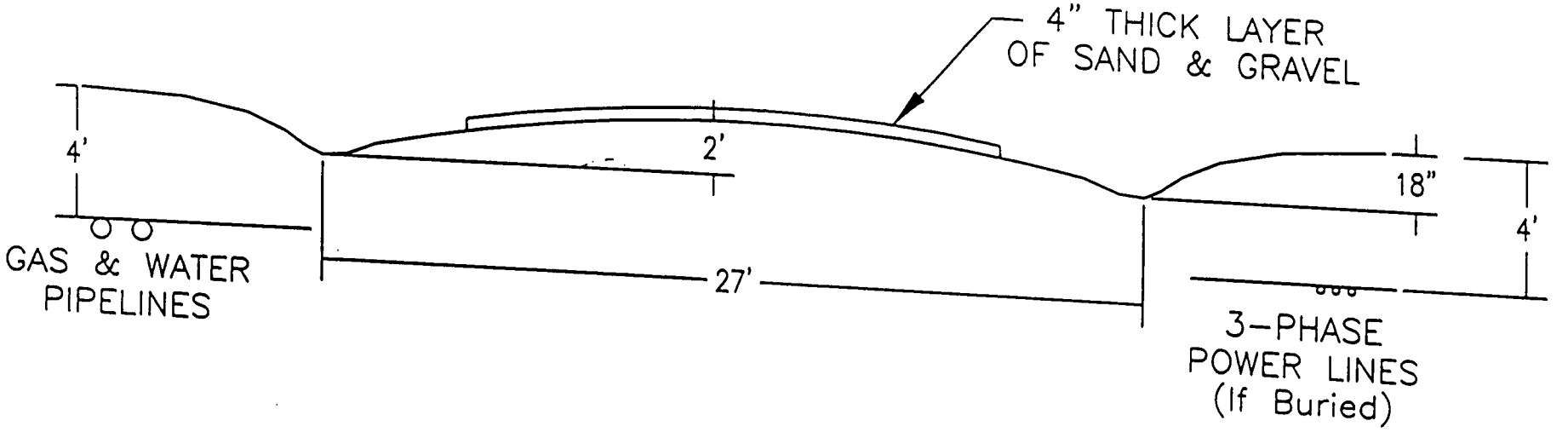

EXHIBIT "F"

BOP Equipment

3000psi WP

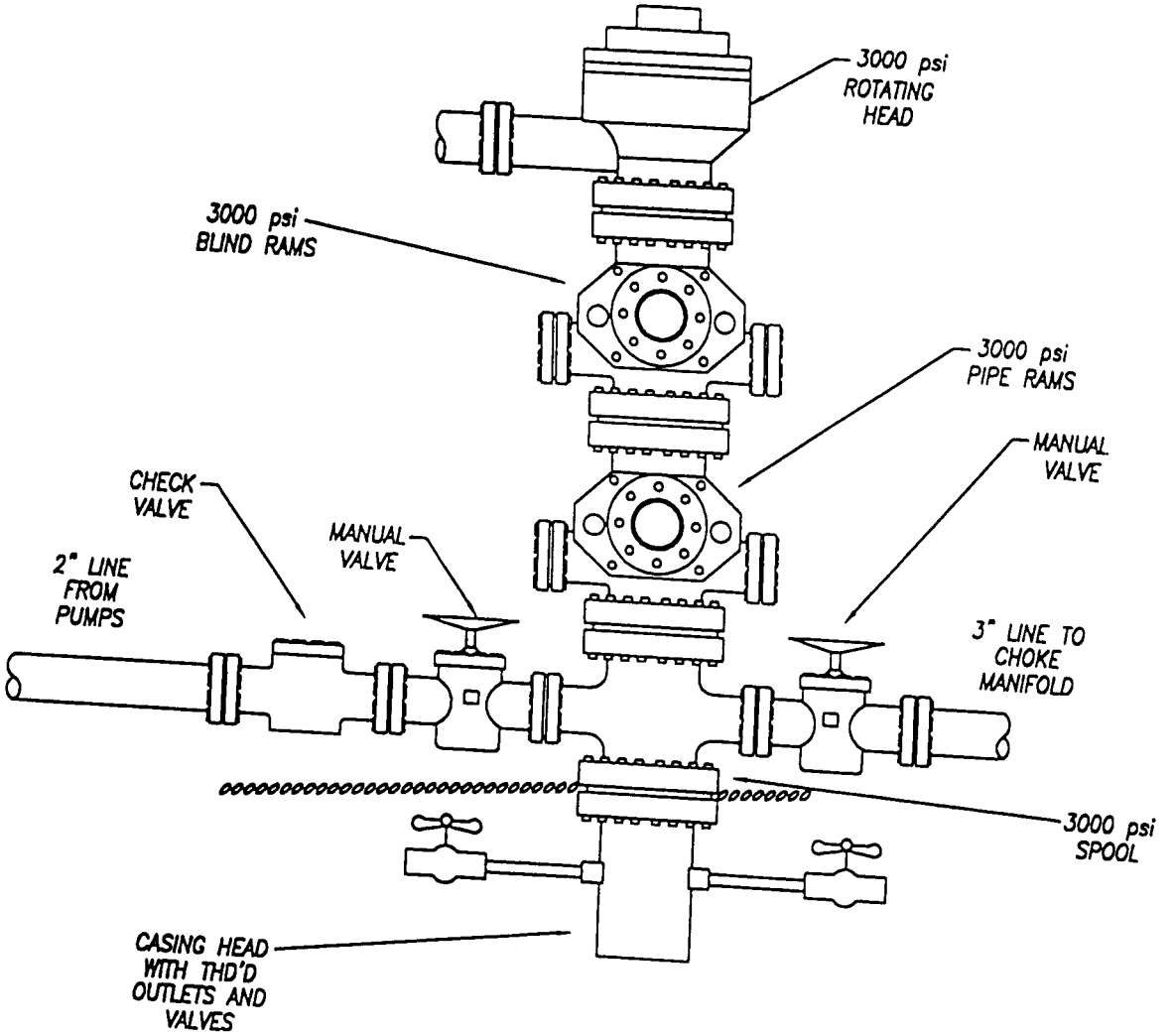

EXHIBIT "C"

CHOKE MANIFOLD

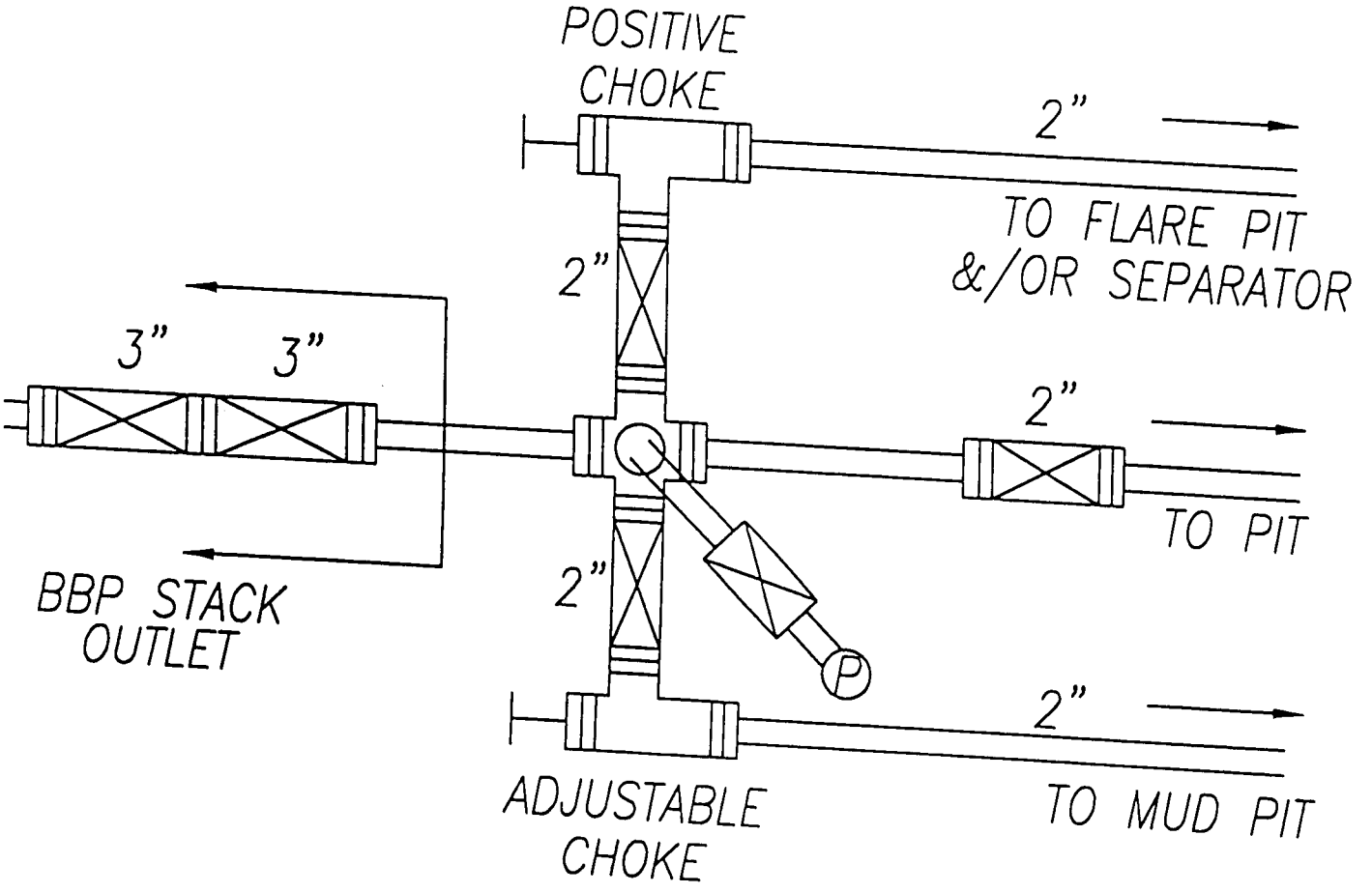

EXHIBIT "H"

005

WORKSHEET
APPLICATION FOR PERMIT TO DRILL

APD RECEIVED: 12/09/2002

API NO. ASSIGNED: 43-015-30587

WELL NAME: ZIONS FED 35-137

OPERATOR: CHEVRON USA INC (N0210)

CONTACT: DON HAMILTON/AGENT

PHONE NUMBER: 435-687-5310

PROPOSED LOCATION:

NESE 35 160S 070E

SURFACE: 2031 FSL 0787 FEL

BOTTOM: 2031 FSL 0787 FEL

EMERY

UNDESIGNATED (2)

LEASE TYPE: 1 - Federal

LEASE NUMBER: UTU-73085

SURFACE OWNER: 4 - Fee

PROPOSED FORMATION: FRSD

INSPECT LOCATN BY: / /

Tech Review	Initials	Date
Engineering		
Geology		
Surface		

LATITUDE: 39.38690

LONGITUDE: 111.09839

RECEIVED AND/OR REVIEWED:

✓ Plat

✓ Bond: Fed[1] Ind[] Sta[] Fee[]
(No. S 304604)

N Potash (Y/N)

N Oil Shale 190-5 (B) or 190-3 or 190-13

✓ Water Permit
(No. MUNICIPAL)

N RDCC Review (Y/N)
(Date:)

Y **Fee Surf Agreement** (Y/N)

LOCATION AND SITING:

____ R649-2-3.

Unit _____

✓ R649-3-2. General
Siting: 460 From Qtr/Qtr & 920' Between Wells

____ R649-3-3. Exception

____ Drilling Unit
Board Cause No: _____
Eff Date: _____
Siting: _____

____ R649-3-11. Directional Drill

COMMENTS: PRESITE 11-13-02

STIPULATIONS: 1- Federal approval
2- Spacing Stip
3. STATEMENT OF BASIS

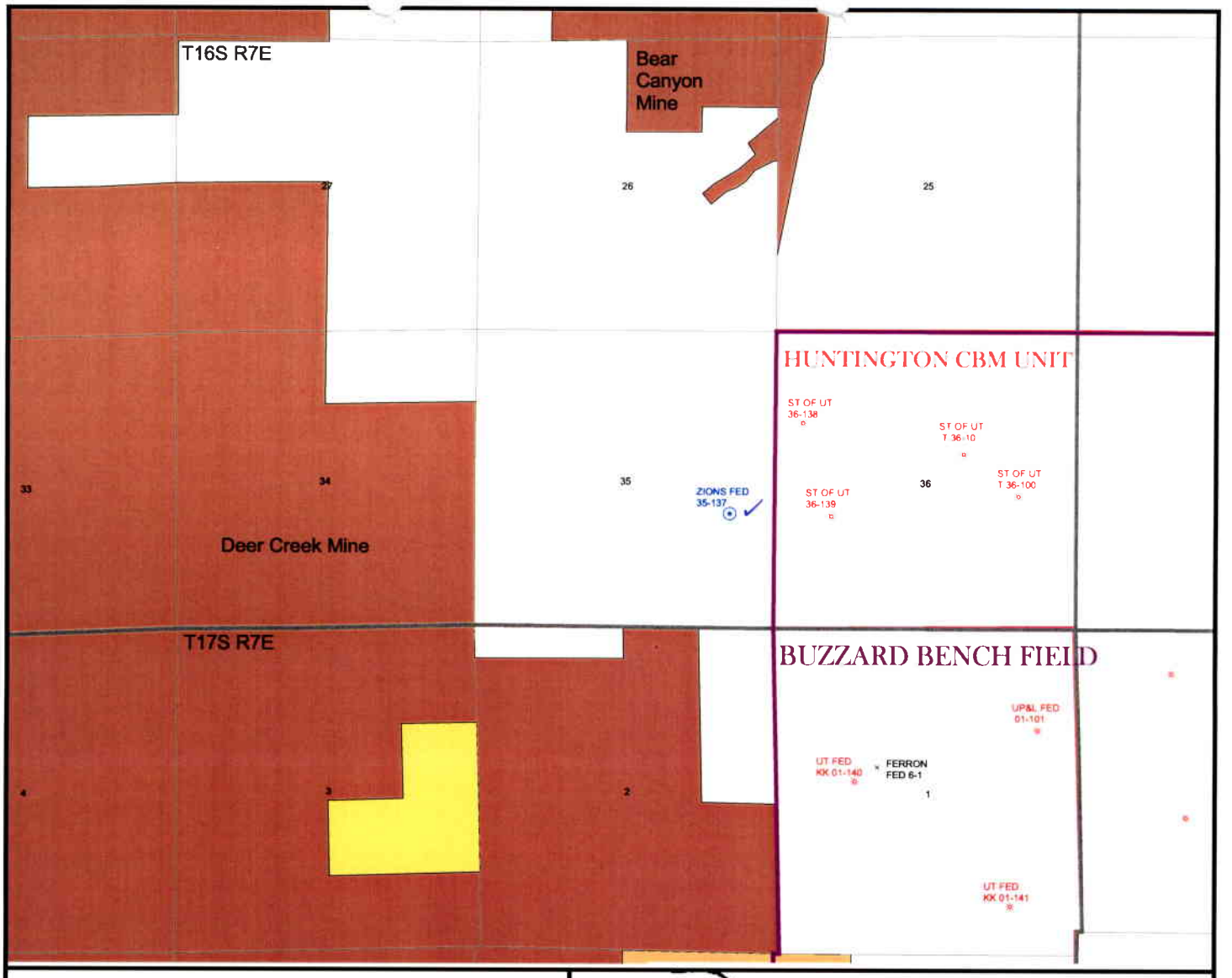

OPERATOR: CHEVRON USA INC (N0210)

SEC. 35 T16S, R7E,

FIELD: UNDESIGNATED (002)

COUNTY: EMERY

SPACING: R649-3-2 / GENERAL SITING

Utah Oil Gas and Mining

WELLS
- GAS INJECTION
- GAS STORAGE
- LOCATION ABANDONED
- NEW LOCATION
- PLUGGED & ABANDONED
- PRODUCING GAS
- PRODUCING OIL
- SHUT-IN GAS
- SHUT-IN OIL
- TEMP. ABANDONED
- TEST WELL
- WATER INJECTION
- WATER SUPPLY
- WATER DISPOSAL

UNIT STATUS
- EXPLORATORY
- GAS STORAGE
- NF PP OIL
- NF SECONDARY
- PENDING
- PI OIL
- PP GAS
- PP GEOTHERML
- PP OIL
- SECONDARY
- TERMINATED

FIELD STATUS
- ABANDONED
- ACTIVE
- COMBINED
- INACTIVE
- PROPOSED
- STORAGE
- TERMINATED
- COUNTY BOUNDARY
- SECTION LINES
- TOWNSHIP LINES

N
W E
S

PREPARED BY: DIANA MASON
DATE: 12-DECEMBER-2002

DIVISION OF OIL, GAS AND MINING
APPLICATION FOR PERMIT TO DRILL
STATEMENT OF BASIS

OPERATOR: Chevron USA
WELL NAME & NUMBER: Zions Federal 35-137
API NUMBER: 43-015-30587
LOCATION: 1/4,1/4 NESE Sec: 35 TWP: 16S RNG: 7E 2031' FSL 787' FEL

Geology/Ground Water:

The minerals at this proposed location are owned by the Federal government. The casing and cementing program will be evaluated and approved by the BLM.

Reviewer: Brad Hill **Date:** 02-27-2003

Surface:

Proposed location is located ~7 miles Northwest of Huntington Utah, and ~24 miles Southwest of Price, Utah. Drainage of the site is to the northeast into Huntington Creek, a year-round live water source, which lies northeast of the location ~.5 miles. The soil is rocky sandy clay loam. Dry washes that have the potential of carrying large amounts of water during seasonal thunderstorms are common throughout the area and it's immediate surroundings. Erosion control, litter and waste disposal, access routes, well-site location and orientation, wildlife concerns, as well as surface owner requests, suggestions, and questions were discussed and agreements were made in regards to during the on-site inspection. BLM and USFS were in attendance at this on-site as was Emery County and a Zions Bank representative. DWR was invited to the on-site inspection but did not attend.

Reviewer: Mark L. Jones **Date:** February 26, 2003.

Conditions of Approval/Application for Permit to Drill:

1. Berm the location and reserve pit.
2. Culverts as needed to deflect and collect runoff.
3. A synthetic liner with a minimum thickness of 12 mils shall be properly installed and maintained in the reserve pit.

Form 3160-5
(June 1990)

UNITED STATES
DEPARTMENT OF THE INTERIOR
BUREAU OF LAND MANAGEMENT

FORM APPROVED
Budget Bureau No. 1004-0135
Expires: March 31, 1993

SUNDRY NOTICES AND REPORTS ON WELLS

003

Do not use this form for proposals to drill or to deepen or reentry to a different reservoir.
Use "APPLICATION FOR PERMIT–" for such proposals

SUBMIT IN TRIPLICATE

5. Lease Designation and Serial No.
UTU-73085

6. If Indian, Allottee or Tribe Name
N/A

7. If Unit or CA, Agreement Designation
N/A

1. Type of Well
☐ Oil ☒ Gas ☐

8. Well Name and No.
Zion's Federal 35-137

2. Name of Operator
Chevron USA, Inc.

9. API Well No.
43-015-30587

3. Address and Telephone No.
P.O. Box 618, Orangeville, Utah 84537 435-748-5395

10. Field and Pool, or Exploratory Area
Undesignated

4. Location of Well (Footage, Sec.,T., R., M., or Survey Description)
2,031' FSL, 787' FEL
NE/4 SE/4, Section 35, T16S, R7E, SLB&M

11. County or Parish, State
Emery County, Utah

12. **CHECK APPROPRIATE BOX(s) TO INDICATE NATURE OF NOTICE, REPORT, OR OTHER DATA**

TYPE OF SUBMISSION	TYPE OF ACTION	
☐ Notice of Intent	☐ Change of Name	Pipeline,Powerline, Maintenance Corridor Construction ☐ Change of Plans
☒ Subsequent Report	☐ Recompletion	☐ New Construction
☐ Final Abandonment Notice	☐ Plugging Back	☐ Non-Routine Fracturing
	☐ Casing Repair	☐ Water Shut-Off
	☐ Altering Casing	☐ Conversion to Injection
	☒ Drilling Program Changes	☐ Dispose Water

13. Describe Proposed or Completed Operations (Clearly state all pertinent details, and give pertinent dates, including estimated date of starting any proposed work. If well is directionally drilled, give subsurface locations and measured and true vertical depths for all markers and zones pertinent to this work.)*

The drilling program for the referenced well has changed to include the utilization of 8-5/8" 23# WC-50 casing. Following is the updated casing and cement program for the well:

HOLE SIZE	SETTING DEPTH (INTERVAL)	SIZE (OD)	WEIGHT,GRADE & JOINT	CONDITION
12–1/4"	300'	8-5/8"	23# WC-50 ST&C	New
7-7/8"	TD	5-1/2"	17# L-80 LT&C	New

RECEIVED
MAR 2 6 2003
DIV. OF OIL, GAS & MINING

Surface Casing: 225 sacks G + 2 % $CaCl_2$ + 0.25 pps cellophane flakes;
Weight: 15.8 #/gal; Yield: 1.16 cu.ft/sk

CONFIDENTIAL

Production Casing: 138 sacks 10:2 RFC Class G cement + 0.25 pps cellophane flakes;
Weight: 14.2 #/gal; Yield: 1.61 cu.ft/sk yield.

14. I hereby certify that the foregoing is true and correct

Signed Don Hamilton Don Hamilton Title Agent for Chevron, USA, Inc. Date March 25, 2003

(This space for Federal or State office use)

Approved by _____ Title _____ Date _____
Conditions of approval, if any:

Title 18 U.S.C. Section 1001, makes it a crime for any person knowingly and willfully to make to any department or agency of the United States any false, fictitious or fraudulent statements or representations as to any matter within its jurisdiction.

Form 3160-5
(June 1990)

U ED STATES
DEPARTMENT OF THE INTERIOR
BUREAU OF LAND MANAGEMENT

FORM APPROVED
Budget Bureau No. 1004-0135
Expires: March 31, 1993

SUNDRY NOTICES AND REPORTS ON WELLS

002

Do not use this form for proposals to drill or to deepen or reentry to a different reservoir.
Use "APPLICATION FOR PERMIT--" for such proposals

SUBMIT IN TRIPLICATE

5. Lease Designation and Serial No.
UTU-73085

6. If Indian, Allottee or Tribe Name
N/A

7. If Unit or CA, Agreement Designation
N/A

1. Type of Well
☐ Oil ☒ Gas ☐

8. Well Name and No.
Zion's Federal 35-137

2. Name of Operator
Chevron USA, Inc.

9. API Well No.
43-015-30587

3. Address and Telephone No.
P.O. Box 618, Orangeville, Utah 84537 435-748-5395

10. Field and Pool, or Exploratory Area
Undesignated

4. Location of Well (Footage, Sec.,T., R:, M., or Survey Description)
2,031' FSL, 787' FEL
NE/4 SE/4, Section 35, T16S, R7E, SLB&M

11. County or Parish, State
Emery County, Utah

12. **CHECK APPROPRIATE BOX(s) TO INDICATE NATURE OF NOTICE, REPORT, OR OTHER DATA**

TYPE OF SUBMISSION	TYPE OF ACTION	
☐ Notice of Intent	☐ Change of Name	Pipeline,Powerline, Maintenance Corridor Construction ☐ Change of Plans
☒ Subsequent Report	☐ Recompletion	☐ New Construction
☐ Final Abandonment Notice	☐ Plugging Back	☐ Non-Routine Fracturing
	☐ Casing Repair	☐ Water Shut-Off
	☐ Altering Casing	☐ Conversion to Injection
	☒ Affidavit of Surface Use	☐ Dispose Water

13. Describe Proposed or Completed Operations (Clearly state all pertinent details, and give pertinent dates, including estimated date of starting any proposed work. If well is directionally drilled, give subsurface locations and measured and true vertical depths for all markers and zones pertinent to this work.)*

Attached please find an *Affidavit of Surface Use* for the reference well.

FILE COPY

14. I hereby certify that the foregoing is true and correct

Signed Don Hamilton Don Hamilton Title Agent for Chevron, USA, Inc. Date April 14, 2003

(This space for Federal or State office use)

Approved by _____ Title _____ Date _____
Conditions of approval, if any:

RECEIVED
APR 17 2003
DIV. OF OIL, GAS & MINING

Title 18 U.S.C. Section 1001, makes it a crime for any person knowingly and willfully to make to any department or agency of the United States any false, fictitious or fraudulent statements or representations as to any matter within its jurisdiction.

AFFIDAVIT

W. E. Herrington, of lawful age, being first duly sworn, on oath deposes and says that he is familiar with the following well to be located and drilled in Township 16 South, Range 7 East, Emery County, Utah:

WELL: Zions - Federal 35-137

and that he is also familiar with Zions First National Bank, Trustee who on the 27th day of March, 2003, entered into a Surface Damage Agreement with Chevron U.S.A. Inc. and that said Surface Damage Agreement granted Chevron U.S.A. Inc. the full use of certain surface parcels, roads and pipeline access to said 35-137 well for the consideration stated therein.

Further affiant saith not.

W. E. Herrington
Landman – Price/Ferron
Coalbed Methane Group

STATE OF TEXAS §
§
COUNTY OF HARRIS §

This instrument was acknowledged before me this 9th day of April, 2003, by W.E. Herrington

WITNESS my hand and official seal.

Notary Public, State of Texas

My Commission expires:

DEBORAH L. FLORA
Notary Public, State of Texas
My Commission Expires
September 21, 2004

State of Utah
DEPARTMENT OF NATURAL RESOURCES
DIVISION OF OIL, GAS AND MINING

1594 West North Temple, Suite 1210
PO Box 145801
Salt Lake City, Utah 84114-5801
(801) 538-5340 telephone
(801) 359-3940 fax
(801) 538-7223 TTY
www.nr.utah.gov

Michael O. Leavitt
Governor
Robert L. Morgan
Executive Director
Lowell P. Braxton
Division Director

April 21, 2003

Chevron USA Inc.
P O Box 618
Orangeville, UT 84537

Re: Zion's Federal 35-137 Well, 2031' FSL, 787' FEL, NE SE, Sec. 35, T. 16 South, R. 7 East, Emery County, Utah

Gentlemen:

Pursuant to the provisions and requirements of Utah Code Ann.§ 40-6-1 *et seq.*, Utah Administrative Code R649-3-1 *et seq.*, and the attached Conditions of Approval, approval to drill the referenced well is granted.

This approval shall expire one year from the above date unless substantial and continuous operation is underway, or a request for extension is made prior to the expiration date. The API identification number assigned to this well is 43-015-30587.

Sincerely,

John R. Baza
Associate Director

pab
Enclosures

cc: Emery County Assessor
Bureau of Land Management, Moab District Office

Operator: Chevron USA Inc.
Well Name & Number Zion's Federal 35-137
API Number: 43-015-30587
Lease: UTU-73085

Location: NE SE **Sec.** 35 **T.** 16 South **R.** 7 East

Conditions of Approval

1. General
   Compliance with the requirements of Utah Admin. R. 649-1 *et seq.*, the Oil and Gas Conservation General Rules, and the applicable terms and provisions of the approved Application for permit to drill.

2. Notification Requirements
   Notify the Division within 24 hours of spudding the well.
   - Contact Carol Daniels at (801) 538-5284.

   Notify the Division prior to commencing operations to plug and abandon the well.
   - Contact Dan Jarvis at (801) 538-5338

3. Reporting Requirements
   All required reports, forms and submittals will be promptly filed with the Division, including but not limited to the Entity Action Form (Form 6), Report of Water Encountered During Drilling (Form 7), Weekly Progress Reports for drilling and completion operations, and Sundry Notices and Reports on Wells requesting approval of change of plans or other operational actions.

4. State approval of this well does not supersede the required federal approval, which must be obtained prior to drilling.

5. This proposed well is located in an area for which drilling units (well spacing patterns) have not been established through an order of the Board of Oil, Gas and Mining (the "Board"). In order to avoid the possibility of waste or injury to correlative rights, the operator is requested, once the well has been drilled, completed, and has produced, to analyze geological and engineering data generated therefrom, as well as any similar data from surrounding areas if available. As soon as is practicable after completion of its analysis, and if the analysis suggests an area larger than the quarter-quarter section upon which the well is located is being drained, the operator is requested to seek an appropriate order from the Board establishing drilling and spacing units in conformance with such analysis by filing a Request for Agency Action with the Board.

6. Compliance with the Conditions of Approval/Application for Permit to Drill outlined in the Statement of Basis. (Copy Attached)

Form 3160-3
(December 1990)

SUBMIT IN PLICATE*
(Other instructions on reverse side)

Form approved.
Budget Bureau No. 1004-0136
Expires: December 31, 1991

007

UNITED STATES
DEPARTMENT OF THE INTERIOR
BUREAU OF LAND MANAGEMENT

RECEIVED
MOAB FIELD OFFICE

APPLICATION FOR PERMIT TO DRILL OR DEEPEN

2002 DEC -9 P 1:23

DEPT OF THE INTERIOR
BUREAU OF LAND MGMT

5. LEASE DESIGNATION AND SERIAL NO.: UTU-73085

6. IF INDIAN, ALLOTTEE OR TRIBE NAME: N/A

7. UNIT AGREEMENT NAME: N/A

8. FARM OR LEASE NAME, WELL NO.: Zion's Federal 35-137

9. API WELL NO.: 43-015-30587

10. FIELD AND POOL, OR WILDCAT: Undesignated

11. SEC., T., R., M., OR BLK. A: NE/4 SE/4, Section 35, T16S, R7E, SLB&M

12. COUNTY OR PARISH: Emery

13. STATE: Utah

1a. TYPE OF WORK: DRILL [X] DEEPEN [ ]

b. TYPE OF WELL: OIL WELL [ ] GAS WELL [X] OTHER SINGLE ZONE [X] MULTIPLE ZONE [ ]

2. NAME OF OPERATOR: Chevron USA, Inc.

3. ADDRESS AND TELEPHONE NO.: P.O. Box 618, Orangeville, Utah 84537; 435-748-5395

4. LOCATION OF WELL (Report location clearly and in accordance with any State requirements.*)
At surface / At proposed prod. zone: 2,031' FSL, 787' FEL

14. DISTANCE IN MILES AND DIRECTION FROM NEAREST TOWN OR POST OFFICE*: 8.3 miles northwest of Huntington, Utah

15. DISTANCE FROM PROPOSED* LOCATION TO NEAREST PROPERTY OR LEASE LINE, FT. (Also to nearest drlg. unit line, if any): 597'

16. NO. OF ACRES IN LEASE: 440

17. NO. OF ACRES ASSIGNED TO THIS WELL: 160 acres

18. DISTANCE FROM PROPOSED LOCATION TO NEAREST WELL, DRILLING, COMPLETED, OR APPLIED FOR, ON THIS LEASE, FT.: 2,700'

19. PROPOSED DEPTH: 4,440'

20. ROTARY OR CABLE TOOLS: Rotary

21. ELEVATIONS (Show whether DF, RT, GR, etc.): 6,660' GR

22. APPROX. DATE WORK WILL START*: May 2003

23. PROPOSED CASING AND CEMENTING PROGRAM

SIZE OF HOLE	GRADE, SIZE OF CASING	WEIGHT PER FOOT	SETTING DEPTH	QUANTITY OF CEMENT
12-1/4"	8-5/8" ~~K-55~~ WC-50 ST&C	~~24~~ 23	300'	~~230~~ 225 sacks Class G cement + 2% $CaCl_2$ + 0.25 pps cellophane flakes 1.16 cf/sk
7-7/8"	5-1/2" ~~N-80~~ L-80 LT&C	17	4,340'	~~135~~ 158 sacks 10:1 RFC Class G cement + 0.25 pps cellophane flakes 1.16 cf/sk

Surface Owner: **Zion's Bank—P.O. Box 30880, Salt Lake City, Utah 84130**
Surface Representative: **Kurt Froerer 1-801-594-8332**

RECEIVED
MAY 14 2003
DIV. OF OIL, GAS & MINING

Federal Bond Number: **S 304604**
Fee Bond Number: **6027949**

ORIGINAL

CONFIDENTIAL

IN ABOVE SPACE DESCRIBE PROPOSED PROGRAM: If proposal is to deepen, give data present productive zone and proposed new productive zone. If proposal is to drill or deepen directionally, give pertinent data on subsurface locations and measured and true vertical depths. Give blowout preventer program, if any.

24.

SIGNED Don Hamilton Don Hamilton TITLE Agent for Chevron DATE 12-5-2002

(This space for Federal or State office use)

PERMIT NO. _____ APPROVAL DATE _____

Application approval does not warrant or certify that the applicant holds legal or equitable title to those rights in the subject lease which would entitle the applicant to conduct operations thereon.
CONDITIONS OF APPROVAL, IF ANY:

APPROVED BY /s/ William Stringer TITLE Assistant Field Manager, Division of Resources DATE _____

***See Instructions On Reverse Side**

Title 18 U.S.C. Section 1001, makes it a crime for any person knowingly and willfully to make to any department or agency or the

CONDITIONS OF APPROVAL ATTACHED

Form 3160-5
(June 1990)

UNITED STATES
DEPARTMENT OF THE INTERIOR
BUREAU OF LAND MANAGEMENT

FORM APPROVED
Budget Bureau No. 1004-0135
Expires: March 31, 1993

SUNDRY NOTICES AND REPORTS ON WELLS

Do not use this form for proposals to drill or to deepen or reentry to a different reservoir.
Use "APPLICATION FOR PERMIT—" for such proposals

RECEIVED
MOAB FIELD OFFICE
2003 MAR 25 P 1:32
DEPT OF THE INTERIOR
BUREAU OF LAND MGMT

SUBMIT IN TRIPLICATE

5. Lease Designation and Serial No.
UTU-73085

6. If Indian, Allottee or Tribe Name
N/A

7. If Unit or CA, Agreement Designation
N/A

1. Type of Well
☐ Oil ☒ Gas ☐

8. Well Name and No.
Zion's Federal 35-137

2. Name of Operator
Chevron USA, Inc.

9. API Well No.
43-015-30587

3. Address and Telephone No.
P.O. Box 618, Orangeville, Utah 84537 435-748-5395

10. Field and Pool, or Exploratory Area
Undesignated

4. Location of Well (Footage, Sec.,T., R:, M., or Survey Description)
2,031' FSL, 787' FEL
NE/4 SE/4, Section 35, T16S, R7E, SLB&M

11. County or Parish, State
Emery County, Utah

12. **CHECK APPROPRIATE BOX(s) TO INDICATE NATURE OF NOTICE, REPORT, OR OTHER DATA**

TYPE OF SUBMISSION	TYPE OF ACTION	
☐ Notice of Intent	☐ Change of Name	Pipeline,Powerline, Maintenance Corridor Construction ☐ Change of Plans
☒ Subsequent Report	☐ Recompletion	☐ New Construction
☐ Final Abandonment Notice	☐ Plugging Back	☐ Non-Routine Fracturing
	☐ Casing Repair	☐ Water Shut-Off
	☐ Altering Casing	☐ Conversion to Injection
	☒ Drilling Program Changes	☐ Dispose Water

13. Describe Proposed or Completed Operations (Clearly state all pertinent details, and give pertinent dates, including estimated date of starting any proposed work. If well is directionally drilled, give subsurface locations and measured and true vertical depths for all markers and zones pertinent to this work.)*

The drilling program for the referenced well has changed to include the utilization of 8-5/8" 23# WC-50 casing. Following is the updated casing and cement program for the well:

HOLE SIZE	SETTING DEPTH (INTERVAL)	SIZE (OD)	WEIGHT,GRADE & JOINT	CONDITION
12–1/4"	300'	8-5/8"	23# WC-50 ST&C	New
7-7/8"	TD	5-1/2"	17# L-80 LT&C	New

Surface Casing: 225 sacks G + 2 % $CaCl_2$ + 0.25 pps cellophane flakes;
Weight: 15.8 #/gal; Yield: 1.16 cu.ft/sk

Production Casing: 138 sacks 10:2 RFC Class G cement + 0.25 pps cellophane flakes;
Weight: 14.2 #/gal; Yield: 1.61 cu.ft/sk yield.

CONFIDENTIAL

14. I hereby certify that the foregoing is true and correct

Signed Don Hamilton Don Hamilton Title Agent for Chevron, USA, Inc. Date March 25, 2003

(This space for Federal or State office use)

Approved by _____ Title _____ Date _____
Conditions of approval, if any:

Title 18 U.S.C. Section 1001, makes it a crime for any person knowingly and willfully to make to any department or agency of the United States any false, fictitious or fraudulent statements or representations as to any matter within its jurisdiction.

Range 7 East

Township 16 South

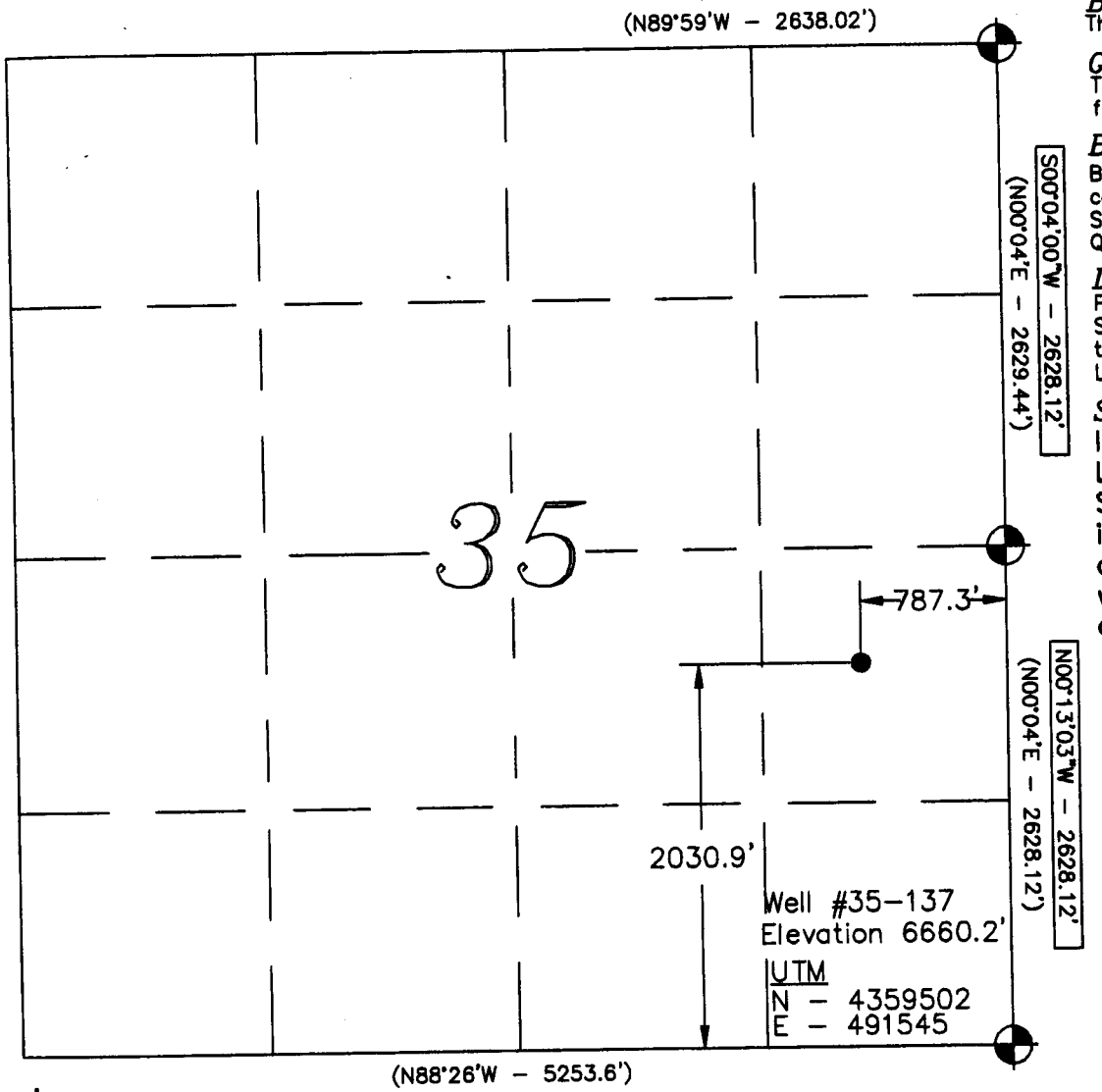

Legend

- Drill Hole Location
- Brass Cap (Found)
- Brass Cap (Searched for, but not found)
- Calculated Corner
- ( ) GLO
- GPS Measured

NOTE:
UTM and Latitude / Longitude Coordinates are derived using a GPS Pathfinder and are shown in NAD 27 Datum.

Lat / Long
39°23'13"
111°05'53"

ORIGINAL

Location:
The well location was determined using a Trimble 4700 GPS survey grade unit.

Basis of Bearing:
The Basis of Bearing is GPS Measured.

GLO Bearing:
The Bearings indicated are per the recorded plat obtained from the U.S. Land Office.

Basis of Elevation:
Basis of Elevation of 6395.0' being at the Southeast Section corner of Section 36, Township 16 South, Range 7 East, Salt Lake Base & Meridian, as shown on the Red Point Quadrangle 7.5 Minute Series Map.

Description of Location:
Proposed Drill Hole located in the NE 1/4, SE 1/4 of Section 35; being 2030.9' North and 787.29' West from the Southeast Corner of Section 35, T16S., R7E., Salt Lake Base and Meridian.

Surveyor's Certificate:
I, Albert J. Spensko, a Registered Professional Land Surveyor, holding Certificate 146652 State of Utah, do hereby certify that the information on this drawing is a true and accurate survey based on data of record and was conducted under my personal direction and supervision as shown hereon.

Registered Land Surveyor
12-06-02
No. 146652
Albert J. Spensko
State of Utah

GRAPHIC SCALE
0 500' 1000'
(IN FEET)
1 inch = 1000 ft.

TALON RESOURCES, INC.
Price - Huntington, Utah
Phone (435)637-8781 Fax (435)636-8603
E-Mail talonscastlenet.com

ChevronTexaco

WELL #35-137

Section 35, T16S., R7E., S.L.B.&M.

Emery County, Utah

Drawn By: J. STANSFIELD	Checked By: L.W.J./A.J.S.
Drawing No. A-1	Date: 08/21/02
	Scale: 1" = 1000'
Sheet 1 of 4	Job No. 490

Chevron USA, Inc.
Zion's Federal 35-137
Lease U-73085
NE/SE Section 35, T16S, R7E
Emery County, Utah

A COMPLETE COPY OF THIS PERMIT SHALL BE KEPT ON LOCATION from the beginning of site construction through well completion, and shall be available to contractors to ensure compliance.

CONDITIONS OF APPROVAL

Approval of this application does not warrant or certify that the applicant holds legal or equitable title to those rights in the subject lease which would entitle the applicant to conduct operations thereon.

Be advised that Chevron USA, Inc. considered to be the operator of the above well and is responsible under the terms and conditions of the lease for the operations conducted on the leased lands.

Bond coverage for this well is provided by **ES0022** (Principal – Chevron USA, Inc.) via surety consent as provided for in 43 CFR 3104.2.

This office will hold the aforementioned operator and bond liable until the provisions of 43 CFR 3106.7-2 continuing responsibility are met.

This permit will be valid for a period of one year from the date of approval. After permit termination, a new application must be filed for approval.

All lease operations will be conducted in full compliance with applicable regulations (43 CFR 3100), Onshore Oil and Gas Orders, lease terms, notices to lessees, and the approved plan of operations. The operator is fully responsible for the actions of his subcontractors.

A. DRILLING PROGRAM

1. The proposed 3M BOPE is adequate for anticipated conditions. Testing of the BOPE to 2M standards is sufficient. Installation, testing and operation of the system shall be in conformance with Onshore Oil and Gas Order No. 2.

2. Concurrent approval from the State of Utah, Division of Oil, Gas & Mining (DOGM) is required before conducting any surface disturbing activities.

3. When drilling with air, the requirements of Onshore Oil and Gas Order No. 2, part III, E, Special Drilling Operations, shall apply. Among the requirements in this section are:

   -Spark arresters
   -Blooie line discharge 100 feet from wellbore
   -Straight blooie line
   -Deduster equipment
   -Float valve above bit
   -Automatic igniter on the blooie line

4. A cement bond log (CBL), or other appropriate tool for determining top-of-cement, shall be run on the production casing string and shall be submitted to BLM.

5. The APD has been amended to provide for the use of 8-5/8", 23#, WC-50 surface casing.

SURFACE USE

1. The following appendices are attached for your reference. They are to be followed as conditions of approval:

   Table A-1, Seed Mixture for Green Strip Areas
   Table A-2, Seed Mixture for Final Reclamation, Pinyon-Juniper Areas
   EMP 16 & 17, Winter Seasonal Restriction on Critical & High Priority Winter Range
   EMP 21, Surface Disturbance Mitigation for Critical and High Priority Winter Range

2. The mud pit shall be lined.

3. Within six months of installation, surface structures shall be painted in the following flat, earth tone color: Olive Black (5W A 20-6). This Fuller O'Brien color is for reference only. Any brand of paint may be used provided the colors match. Any facilities that must be painted to comply with OSHA standards are exempt.

4. An archeologist shall be present during earth disturbing activities.

GENERAL CONSTRUCTION

1. Operator shall contact the Price BLM Office at least forty-eight hours prior to the anticipated start of construction and/or any surface disturbing activities. The BLM may require and schedule a preconstruction conference with the operator prior to the operator commencing construction and/or surface disturbing activities. The operator and the operator's contractor, or agents involved with construction and/or any surface disturbing activities associated with the project, shall attend this conference to review the Conditions of Approval and plan of development. The operator's inspector will be designated at the pre-drill conference, and is to be given an approved copy of all maps, permits and conditions of approval before the start of construction. The BLM will also designate a representative for the project at the preconstruction conference.

2. The operator shall designate a representative(s) who shall have the authority to act upon and to implement instructions from the BLM. The operator's representative shall be available for communication with the BLM within a reasonable time when construction or other surface disturbing activities are

underway.

3. Any cultural and/or paleontological resource (historic or prehistoric site or object) discovered by the operator, or any person working on his behalf, on public land is to be immediately reported to the Price BLM Office. The operator will suspend all operations in the immediate area of such discovery until written authorization to proceed is issued by the Price BLM Office. An evaluation of the discovery will be made by the BLM to determine appropriate actions to prevent the loss of significant cultural or scientific values. The operator is responsible for the cost of evaluation of any site found during construction. The BLM will determine what mitigation is necessary.

4. During project construction, surface disturbance and vehicle travel shall be limited to the approved location and access routes. Any additional area needed must be approved by the Price BLM Office prior to use.

5. The operator must provide a trash cage for the collection and containment of all trash. The trash shall be disposed in an authorized landfill. The location and access roads shall be kept litter free.

6. Vegetation removal necessitated by construction shall be confined to the limits of actual construction. Removed vegetation will be stockpiled for use in reclamation or removed from the construction site at the direction of the BLM.

7. Prior to surface disturbance, topsoil is to be separately removed and segregated from other material. Topsoil depth will be decided onsite by BLM. If the topsoil is less than 6 inches, a 6-inch layer that includes the A horizon and the unconsolidated material immediately below the A horizon shall be removed and the mixture segregated and redistributed as the surface soil layer.

   Generally topsoil shall be stored within the pad site or adjacent to access roads. The company in consultation with BLM shall determine stockpile locations and dimensions at the onsite. If the topsoil stockpiles will not be redistributed for a period in excess of one (1) year, the stockpiles are to be seeded with seed mixture Pinyon-Juniper (see attached).

ROAD and PIPELINE CONSTRUCTION

8. Operator shall provide an inspector under the direction of a registered professional engineer (PE) at all times during road construction. A PE shall certify (statement with PE stamp) that the road was constructed to the required Bureau of Land Management (BLM) road standards.

9. Road construction or routine maintenance activities are to be performed during periods when the soil can adequately support construction equipment. If such equipment creates ruts more than 6 inches deep, the soil is deemed too wet to adequately support construction equipment.

10. The operator is responsible for maintenance of all roads authorized through the lease or a right-of-way. Construction and maintenance shall comply with Class ll or III Road Standards as described in BLM Manual Section 9113 and the Moab District Road Standards, except as modified by BLM. Maintenance may include but is not limited to grading, applying gravel, snow removal, ditch cleaning, headcut restoration/prevention.

11. Topsoil from access roads and pipelines is to be wind rowed along the uphill side of the road or stored in an approved manner. When the road and pipeline is rehabilitated, this soil will then be used as a top coating for the seed bed.

12. Erosion-control structures such as water bars, diversion channels, and terraces will be constructed to divert water and reduce soil erosion on the disturbed area. Road ditch turnouts shall be equipped with energy dissipators as needed to avoid erosion. Where roads interrupt overland sheet-flow and convert this runoff to channel flow, ditch turnouts shall be designed to reconvert channel flow to sheet flow. Rock energy dissipators and gravel dispersion fans may be used, or any other design which would accomplish the desired reconversion of flow regime. As necessary cut banks, road drainages, and road crossings shall be armored or otherwise engineered to prevent headcutting.

PAD CONSTRUCTION

13. During the construction of the drill pad, suitable topsoil material is to be stripped and conserved in a stockpile on the pad. If stockpiles are to remain for more than a year, they shall be seeded with the seed mixture Pinyon-Juniper (see attached).

14. Generally, drill pads are to be designed to prevent overland flow of water from entering or leaving the site. The pad is to be sloped to drain spills and water into the reserve pit. The drill pad shall be designed to disperse diverted overland flow and to regulate flow velocity so as to prevent or minimize erosion. Well pad diversion outlets shall be equipped with rock energy brakes and gravel-bedded dispersion fans.

REHABILITATION PROCEDURES

Site Preparation

15. The entire roadbed should be obliterated and brought back to the approximate original contour. Drainage control is to be reestablished as necessary. All areas affected by road construction are to be recontoured to blend in with the existing topography. All berms are to be removed unless determined to be beneficial by BLM. In recontouring the disturbed areas, care should be taken to not disturb additional vegetation.

Seedbed Preparation

16. An adequate seedbed should be prepared for all sites to be seeded. Areas to be revegetated should be chiselled or disked to a depth of at least 12 inches unless restrained by bedrock.

17. Ripping of fill materials should be completed by a bulldozer equipped with single or a twin set of ripper shanks. Ripping should be done on 4-foot centers to a depth of 12 inches. The process should be repeated until the compacted area is loose and friable, then shall be followed by final grading. Seedbed preparation will be considered complete when the soil surface is completely roughened and the number of rocks (if present) on the site is sufficient to cause the site to match the surrounding terrain.

18. After final grading, the stockpiled topsoil shall be spread evenly across the disturbed area.

Fertilization

19. Commercial fertilizer with a formula of 16-16-8 is to be applied at a rate of 200 pounds per acre to the site. The rate may be adjusted depending on soil.

20. Fertilizer is to be applied not more than 48 hours before seeding, and shall be cultivated into the upper 3 inches of soil.

21. Fertilizer is to be broadcast over the soil using hand-operated "cyclone-type" seeders or rotary broadcast equipment attached to construction or revegetation machinery as appropriate to slope. All equipment should be equipped with a metering device. Fertilizer application is to take place before the final seeding preparation treatment. Fertilizer broadcasting operations should not be conducted when wind velocities would interfere with even distribution of the material.

Mulching

22. When it is time to reclaim this location, the Price BLM Office will determine whether it will be necessary to use mulch in the reclamation process. The type of mulch should meet the following requirements: Wood cellulose fiber shall be natural or cooked, shall disperse readily in water, and shall be nontoxic. Mulch shall be thermally produced and air dried. The homogeneous slurry or mixture shall be capable of application with power spray equipment. A colored dye that is noninjurious to plant growth may be used when specified. Wood cellulose fiber is to be packaged in new, labeled containers. A minimum application of 1500 pounds per acre shall be applied. A suitable tackifier shall be applied with the mulch at a rate of 60 to 80 pounds per acre.

    An alternative method of mulching on small sites would be the application of straw or hay mulch at a rate of 2000 pounds per acre. Hay or straw shall be certified weed free. Following the application of straw or hay, crimping shall occur to ensure retention.

Reseeding

23. All disturbed areas are to be seeded with the seed mixture required by the BLM. The seed mixture(s) shall be planted in the fall of the year (Sept-Nov), in the amounts specified in pounds of pure live seed (PLS)/acre. There shall be no noxious weed seed in the seed mixture. Seed will be tested and the viability testing of seed shall be done in accordance with State law(s) and within 12 months prior to planting. Commercial seed will be either certified or registered seed. The seed mixture container shall be tagged in accordance with State law(s) and available for inspection by the BLM. Seed is to be planted using a drill equipped with a depth regulator to ensure proper depth of planting where drilling is possible. The seed mixture shall be evenly and uniformly planted over the disturbed area. (Smaller/heavier seeds tend to drop to the bottom of the drill and are planted first. Appropriate measures should be taken to ensure this does not occur.) Where drilling is not possible, seed is to be broadcast and the area raked or chained to cover the seed. Woody species with seeds that are too large for the drill will be broadcast. When broadcasting the seed, the pounds per acre noted below are to be increased by 50 percent. Reseeding may be required if a satisfactory stand is not established to the surface rights owner's specifications. Evaluation of the seeding's success will not be made before completion of the second growing season after the vegetation becomes established. The Price BLM Office is to be notified a minimum of seven days before seeding a project.

24. The disturbed areas for the road and pipeline must be seeded in the fall of the year, immediately after the topsoil is replaced. The prescribed seed mixture is Pinyon-Juniper (see attached).

General

25. Prior to the use of insecticides, herbicides, fungicides, rodenticides and other similar substances, the operator must obtain from BLM, approval of a written plan. The plan must describe the type and quantity of material to be used, the pest to be controlled, the method of application, the location for storage and disposal of containers, and other information that BLM may require. A pesticide may be used only in accordance with its registered uses and within other agency limitations. Pesticides must not be permanently stored on public lands.

The following seed mixture would be planted along service road borrow ditches, around the edges of drill pads with a production well, and surrounding other production and maintenance facilities. The purpose for this is to provide a "green strip" buffer to minimize fire hazards and prevent invasion and establishment of noxious weeds in areas that will receive continued disturbance for the life of these areas.

Table A-1

Common Plant Name	Scientific Name	Pounds per acre (PLS)
Forage kochia	*Kochia prostrata*	2
Wyoming big sagebrush	*Artemisia tridentata wyomingenis* var. Gordon Creek	1
Douglas low rabbitbrush	*Chrysothamnus viscidiflorus*	1
	TOTAL	4

The following seed mixture is for the area that would receive final reclamation. Areas would be planted to protect them from soil erosion and to restore forage production.

Table A-2

Common Plant Name	Scientific Name	Pounds per acre (PLS)[1]
Pinyon Juniper Areas		
Grasses		
Thickspike wheatgrass	*Elymus lanceolatus*	1.5
Intermediate wheatgrass	*Elytrigia intermedia*	1.5
Squirreltail	*Elymus elymoides*	2
Crested wheatgrass	*Agropyron desertorum*	2
Forbs		
Lewis flax	*Linum perenne lewisii*	1
Palmer penstemon	*Penstemon palmerii*	1
Shrubs		
Forage kochia	*Kochia prostrata*	2
Fourwing saltbrush	*Atriplex canescense*	2
Wyoming big sagebrush	*Arternesia tridentata wyomingensis* var. Gordon Creek	1
Antelope bitterbrush	*Purshia tridentata*	1
	TOTAL	15

1. Seeding rate is listed as pounds per acre of pure live seed (PLS) drilled. Rate is increased by 50 percent if broadcast seeded.
Formula: pure live seed (PLS) = % seed purity x % seed germination

FERRON NATURAL GAS PROJECT AREA
PROPONENT: Chevron **WELL #:** 35-137

EPM 16 & 17: WINTER SEASONAL RESTRICTION (DECEMBER 1 to APRIL 15) ON CRUCIAL AND HIGH PRIORITY WINTER RANGE.

Restrictions on Construction Phase Activity: Prohibit construction phase activity, described below, on big game high value and critical winter range during the period (December 1 - April 15) without regard for land ownership.

This condition would not apply to normal maintenance and operation of producing wells, described below. On nonfederal lands (where the federal government does not have either surface or subsurface ownership) the Companies would be allowed to conduct construction phase activity if needed to avoid breech of contract or loss of lease rights. In the event construction phase activity proceeds into the winter closure period on non federal interest lands, Companies would make available appropriate documentation to UDWR, upon request.

Construction Phase Activity: Construction phase activity is considered to include all work associated with initial drilling and construction of facilities through completion, including installation of pumping equipment, connection with ancillary facilities and tie-in with pipelines necessary for product delivery.

Companies would not be allowed to initiate construction activity unless it is reasonable to believe that such work can be finished to a logical stopping point prior to December 1 of that year. Specific activities considered to be covered by the seasonal closure include all heavy equipment operation including but not limited to the following:

- Mobilization/Demobilization or operation of heavy equipment (crawler tractor, front end loader, backhoe, road grader, etc.)
- Construction activity (road construction or upgrading, pad, pipeline, powerline, ancillary facilities, etc.),
- Drilling activity (Operator would not propose or initiate drilling activity if the project could not reasonably be expected to be finished to a logical stopping point by the December 1 date of that year.)
- Seismic operation, detonation of explosives

This seasonal closure would not apply to reconnaissance, survey/design and/or flagging of project work or other similar activity not requiring actions listed for heavy equipment operation.

Production Phase: A well is considered to be in production phase when the well and ancillary facilities are completed to the point that they are capable of producing and delivering product for sale. It is noted that heavy equipment operation may be necessary in the performance of maintenance and operation of producing wells.

Restriction on Non Emergency Workover Operations: The Companies will schedule non-emergency workover operations (defined below) on big game crucial and high value winter range outside the December 1 to April 15 date of the seasonal closure.

Non-emergency Workover Operations: Workover operations to correct or reverse a gradual loss of production over time (loss of production of 20 percent or less over a 60 day period) is considered to be routine or non-emergency workover operations and would not be permitted during the December 1 to April 15 time frame.

Emergency Workover Operations: Emergency work over operations are defined as downhole equipment failure problems or workover operation necessary to avoid shut in of the well or to avoid an immediate safety or environmental problem. Loss of production greater than 20 percent within a 60 day period is indicative of pump failure and will be treated as an emergency workover operation. The Companies will submit Sundry notices to BLM within five days of the emergency workover operations between December 1 and April 15.

FERRON NATURAL GAS PROJECT AREA
PROPONENT: Chevron **WELL #:** 35-137

EPM 21: SURFACE DISTURBANCE MITIGATION FOR CRITICAL AND HIGH PRIORITY WINTER RANGE

The subject permit application is proposed within critical and high priority winter range (FEIS) and subject to EPM 21 requiring acre for acre mitigation for surface disturbance on critical winter range. The following condition comes from a cooperative agreement between the Texaco, Anadarko, Chandler (Companies), BLM-Price Field Office, the Utah Division of Wildlife Resources and the National Fish and Wildlife Foundation. The Companies agreed to the following:

1. Contribute $1,301.26 (1998 dollars) for each Federal interest well (Federal surface and or subsurface ownership) permitted and drilled by the Companies (or on behalf of Companies by its contractor) on big game critical winter range as depicted in the FEIS Ferron Natural Gas Project Area. (Wells meeting the above criteria for which payment will be required, will be referred to as "subject wells".) This contribution will be adjusted annually for inflation based on the Consumer Price Index (CPI), see Section II.C.6. for the reference source used for the determination of the CPI and the date in which this annual adjustment will go into effect.

Since this mitigation program is designed to address impacts of all big game critical winter range surface disturbance (roads, well pads, pipelines, etc.), contributions will be required regardless of the success or failure of the subject well to produce.

a. The recorded date for spudding for each subject well (the first boring of a hole during the drilling of a well) will serve as the reference date triggering the requirement for the mitigation contribution.

b. Contributions will be submitted (in the form of an Company check, cashiers check or wire transfer) directly to the National Fish and Wildlife Foundation by the 1st of August and February for all subject wells spudded in the preceding six months as reported by the Bureau.

c. All contributions will be made payable to the "National Fish and Wildlife Foundation re, Proj 99-270" and reference the "Ferron Natural Gas Wildlife Habitat Impact Mitigation Fund".

C. REQUIRED APPROVALS, REPORTS AND NOTIFICATIONS

Required verbal notifications are summarized in Table 1, attached.

Building Location- Contact the BLM, Natural Resource Protection Specialist at least 48-hours prior to commencing construction of location.

Spud- The spud date will be reported to BLM 24-hours prior to spudding. Written notification in the form of a Sundry Notice (Form 3160-5) will be submitted to the Moab Field Office within 24-hours after spudding, regardless of whether spud was made with a dry hole digger or big rig.

Daily Drilling Reports- Daily drilling reports shall detail the progress and status of the well and shall be submitted to the Moab Field Office on a weekly basis.

Monthly Reports of Operations- In accordance with Onshore Oil and Gas Order No. 1, this well shall be reported on Minerals Management Service (MMS) Form 3160, "Monthly Report of Operations," starting the month in which operations commence and continuing each month until the well is physically plugged and abandoned. This report will be filed directly with MMS.

Sundry Notices- There will be no deviation from the proposed drilling and/or workover program without prior approval. "Sundry Notices and Reports on Wells" (Form 3160-5) will be filed with the Moab Field Office for approval of all changes of plans and subsequent operations in accordance with 43 CFR 3162.3-2. Safe drilling and operating practices must be observed.

Drilling Suspensions- Operations authorized by this permit shall not be suspended for more than 30 days without prior approval of the Moab Field Office. All conditions of this approval shall be applicable during any operations conducted with a replacement rig.

Undesirable Events- Spills, blowouts, fires, leaks, accidents, or any other unusual occurrences shall be immediately reported to the BLM in accordance with requirements of NTL-3A.

Cultural Resources- If cultural resources are discovered during construction, work that might disturb the resources is to stop, and the Price Field Office is to be notified.

First Production- Should the well be successfully completed for production, the Moab Field Office will be notified when the well is placed in producing status. Such notification may be made by phone, but must be followed by a sundry notice or letter not later than five business days following the date on which the well is placed into production.

A first production conference will be scheduled as soon as the productivity of the well is apparent. This conference should be coordinated through the Moab Field Office. The Moab Field Office shall be notified prior to the first sale.

Well Completion Report- Whether the well is completed as a dry hole or as a producer, "Well Completion and Recompletion Report and Log" (Form 3160-4) will be submitted to the Moab Field Office not later than thirty-days after completion of the well or after completion of operations being performed, in accordance with 43 CFR 3162.4-1. Two copies of all logs, core descriptions, core analyses, well test data, geologic summaries, sample description, and all other surveys or data obtained and compiled during the drilling, workover, and/or completion operations, will be filed with Form 3160-4. When requested, samples (cuttings and/or samples) will be submitted to the Moab Field Office.

Venting/Flaring of Gas- Gas produced from this well may not be vented/flared beyond an initial, authorized test period of 30 days or 50 MMcf, whichever first occurs, without the prior, written approval of the Moab Field Office. Should gas be vented or flared without approval beyond the authorized test period, the well may be ordered shut-in until the gas can be captured or approval to continue the venting/flaring as uneconomic is granted. In such case, compensation to the lessor (BLM) shall be required for that portion of the gas that is vented/flared without approval and which is determined to have been avoidably lost.

Produced Water- An application for approval of a permanent disposal method and location will be submitted to the Moab Field Office for approval pursuant to Onshore Oil and Gas Order No.7.

Off-Lease Measurement, Storage, Commingling- Prior approval must be obtained from the Moab Field Office for off-lease measurement, off-lease storage and/or commingling (either down-hole or at the surface).

Plugging and Abandonment- If the well is completed as a dry hole, plugging instructions must be obtained from the Moab Field Office prior to initiating plugging operations.

A "Subsequent Report of Abandonment" (Form 3160-5) will be filed with the Moab Field Office within thirty-days following completion of the well for abandonment. This report will indicate where plugs were placed and the current status of surface restoration. Upon completion of approved plugging, a regulation marker will be erected in accordance with 43 CFR 3162.6. Final abandonment will not be approved until the surface reclamation work required by the approved APD or approved abandonment notice has been completed to the satisfaction of the Price Field Office or the appropriate surface managing agency.

TABLE 1

NOTIFICATIONS

Notify Don Stephens (435-636-3608) of the BLM Price Field Office for the following:

2 days prior to commencement of dirt work, construction and reclamation;

1 day prior to spudding;

50 feet prior to reaching the surface casing setting depth.

If the person at the above number cannot be reached, notify the Moab Field Office at 435-259-2100. If unsuccessful, contact the person listed below.

Well abandonment operations require 24 hour advance notice and prior approval. In the case of newly drilled dry holes, verbal approval can be obtained by calling the Moab Field Office at 435-259-2100. If approval is needed after work hours, you may contact the following:

Eric Jones, Petroleum Engineer	Office: 435-259-2117 Home: 435-259-2214

CONFIDENTIAL

DIVISION OF OIL, GAS AND MINING

SPUDDING INFORMATION

Name of Company: CHEVRON USA INC

Well Name: ZIONS FED 35-137

Api No: 43-015-30587 Lease Type: FEDERAL – FEE SURFACE

Section 35 Township 16S Range 07E County EMERY

Drilling Contractor BILL JR'S RIG # AIR

SPUDDED:

Date 06/04/03

Time

How ROTARY

Drilling will commence:

Reported by RICKY HUGABEE

Telephone # 1-318-393-9453

Date 06/05/2003 Signed: CHD

ChevronTexaco

Mid-Continent Business Unit
Facsimile Transmittal Sheet

DATE:

TO:

Company: State of Utah

Name: Carol Daniels

Phone:

Fax: 801-359-3940

FROM:

Company: ChevronTexaco

Name: Darla Nelson

Phone: 281-561-3790

Fax: 281-561-3645

No. of pages including cover sheet:

MESSAGE: Weekly morning reports

RECEIVED
JUN 16 2003
DIV. OF OIL, GAS & MINING

009

ChevronTexaco — **Drilling Activity Report**

Measured Depth: 1,411'	TVD: 1,411'	PBTD:				Proposed MD: 4,290'	Proposed TVD: 4,290'				
DOL: 7	DSS: 32	Spud Date: 04-JUN-2003		Daily Footage: 801		Daily Rot Hrs: 16.5	Total Rot Hrs: 23.5				
Temp:	Drag: 12	Rot Wgt: 48	P/U Wgt: 60	Slack Off Wgt: 30	Wind:	Seas: /	Bar:	POB:			
Last Casing Size: 8.625"	Set At: 299' MD	299' TVD	Shoe Test: EMW Leakoff?								
Cum Rot Hrs On Casing: 16.5	Cum Rot Hrs On Casing Since Last Caliper: 24.0	Depth Worst Wear:	% Remaining:								
Liner Size:	Set At: MD TVD	Liner Top At: MD TVD									
Mud Co:	Type: AIR	Sample From: FLOW	Wt: 8.4	PV:	YP:	Gel: /					
WL API: HTHP:	FC (1/32) API: HTHP:	Solids:	% Oil:	%Water:	% Sand:	MBT:	Ph:				
Pm	Pf/Mf: /	Cakb:	Cl:	Ca:	Bent:	Solids HVG/LG: /	HDS/Bent: /				
Drlg Gas:	Max Gas:	Conn Gas:	Trip Gas:	Trip Cl:	Remarks:						

Bit Number	IADC	Size	Manufacturer	Serial number	Jets (Quantity - Size)	TFA	MD In	MD Out	TVD Out
1	537A	7.875	HTC	KP2618	3 - 20 / 1 - 18 / - / - / -	1.169	299		
					- / - / - / - / -				

Type	Feet	Hours	WOB	RPM	Motor RPM	I-Row	O-Row	DC	Loc	B	G	Char	TRull	Cost/Ft
HP53JDC	1,112	23.5	20/30	50 / 120										$ 26.47
			/	/										

Total Length of BHA: 476.29' BHA Description: BIT, PS, 16 - 6" DC'S

Hrs On Jars: Hours Since Last Inspection: 23.5

Bit Nozz	Liner	Stroke	SPM	Press.	GPM	Jet Vel	DP Av	DC Av	Bit HHP	HHP/SQIN	Pump HHP
1	6.500/6.500/	8.000/7.000/	89/ /	430	298	82.0	174.9	280.8	8.7	0.2	75
	/ /	/ /	/ /								

Survey MD	Angle	Azimuth	Direction	TVD	N/S Coordinates	E/W Coordinates	Vertical Section	DLS

Hours	From	Act-Cat	Operations Covering 24 Hours Ending at Midnight — Total Hours Reported: 24.0
0.50	0	01 - 02	DRILL FROM 610' TO 640'. 20M WOB, 60 RPM. DRILLING W/ 2100 CFM AIR AND MIST, WELL MAKING WATER.
1.50T	30	01 - 05	POOH TO SHOE DUE TO AVAILABLE ROOM TO HANDLE WATER FROM WELL. MONITOR WELL.
3.00T	200	01 - 44	WAIT ON TRANSFER PUMP. ARRIVED AT 03:00. RIG UP SAME TO PUMP FLUID FROM RESERVE PIT TO FRAC TANKS.
1.50T	500	01 - 05	TIH TO 640'. NO HOLE PROBLEMS ON TRIP. NO FILL.
7T	630	01 - 02	DRILL FROM 640' TO 1011', 371', 53 FPH. DRILLING W/ 2100 CFM AIR AND MIST. NO HOLE PROBLEMS ON CONNECTIONS.
		-	DOUBLE REAMING ALL CONNECTIONS. PUMPING AND HAULING WATER FROM RESERVE PIT. ESTIMATED WATER PRODUCTION FROM
		-	WELL: 5 BPM.
0.50	1330	01 - 06	SURVEY AT 970', 3/4 DEGREES.
1.00	1400	01 - 02	DRILL FROM 1011' TO 1072'.
0.50	1500	01 - 21	RIG SERVICE
4.50	1530	01 - 02	DRILL FROM 1072' TO 1257'. 27M WOB, 120 RPM. 185', 41 FPH. NO HOLE PROBLEMS ON CONNECTIONS.
4	2000	01 - 02	DRILL FROM 1257' TO 1411', 154', 39 FPH. 27 TO 30M WOB, 120 RPM. SWITCH TO AIRIATED FLUID TO CONTROL WATER
		-	PRODUCTION. PUMPING 300 GPM WATER AND 1000 CFM AIR TO MAINTAIN SLIGHT UNDERBALANCE CONDITION. NO HOLE
		-	PROBLEMS ON CONNECTIONS.
		-	

Safety: TIW, HAND INJURIES, MAKING CONNECTIONS.

24 Hr Summary: DRILL FROM 610' TO 1411'. SWITCH FROM AIR TO AIRIATED WATER DUE TO WATER PRODUCTION FROM WELL.

Projected Oper: DRILL AHEAD WITH AIRIATED WATER.

Remarks:
CAPSTY NTG: 2 TOTAL FOR WELL: 16 DAILY RIG HRS: 132, TOTAL RIG HRS: 894; DAILY OTHER HRS: 52, TOTAL OTHER HRS: 274

DIESEL USED LAST 24 HRS: 1116 GALS

Daily Mud Cost:	Daily Tangible Cost: $ 0	Daily Well Cost: $ 21,379	Incidents: NO INCIDENT REPORTED
Cum Mud Cost: $ 0	Cum Tangible Cost: $ 4,772	Cum Well Cost: $ 182,471	Total Appr: $ 212,734
Drill Water:	Potable Water:	Fuel: 3224	Bulk Weight: Bulk Cement: Blended:
Country: U.S.A.	Rig: NABORS 414	Rig Phone: 713-860-4255	Drilling Rep: J.S. MARSHALL
Field: ORANGEVILLE	Lease: ROYN'S PERSONAL	Well No: 35-137	Well ID: HK7251 -0
	API No: 43-015-30587	AFE No: UWICBD2057DRL	Date: 18-JUN-2003 Page: 1 of 1

2 Lons Fed. 35-137
T 16S R 07E SEC 35
API # 43-015-30587

RECEIVED
JUN 16 2003
DIV OF OIL, GAS & MINING

Drilling Activity Report

Measured Depth: 610'	TVD: 610'	PBTD:	Proposed MD: 4,290'	Proposed TVD: 4,290'		
DOL: 6	DFS: 11	Spud Date: 04-Jun-2003	Daily Footage: 311'	Daily Rot Hrs: 7.0	Total Rot Hrs: 7.0	
Torq:	Drag: 2	Rot Wgt: 42	P/U Wgt: 44	Slack Off Wgt: 40	Wind:	Seas: / Bar: PCB:
Last Casing Size: 8.625"	Set At: 299'	MD 299'	TVD	Shoe Test:	EMW	Leakoff?
Cum Rot Hrs On Casing: 7.5	Cum Rot Hrs On Casing Since Last Caliper: 7.5		Depth Worst Wear:		% Remaining:	
Liner Size:	Set At: MD	TVD	Liner Top At: MD	TVD		
Mud Co:	Type: AIR	Sample From: FLOW	Wt:	FV:	PV:	YP: Gel: /
Wl: API: HTHP:	FC (1/32) API: HTHP:	Solids:	% Oil:	Water:	% Sand:	MBT: pH:
Pm:	Pf/Mf: /	Carb:	Cl:	Ca:	Gent:	Solids HGC/LG: / MBS/Bent: /

Drlg Gas:	Max Gas:	Conn Gas:	Trip Gas:	Trip Cl:	Remarks:

Bit Number	IADC	Size	Manufacturer	Serial number	Jets (Quantity - Size)	TFA	MD In	MD Out	TVD Out
1	537A	7.875	HTC	KP2618	3 - 20 / - / - / - / -	1.169	299'		
					1 - 18 / - / - / - / -				

Type	Feet	Hours	WOB	RPM	Motor RPM	I-Row	O-Row	DC	Loc	B	G	Char	?Pull	Cost/Ft
HPS3JAC	311	7.0	20 / 60	/										$ 50.42
			/	/										$

Total Length of BHA: 476.29' BHA Description: BIT, FS, 16 - 6" DC'S

Hrs On Jars: Hours Since Last Inspection: 7

Bit Num	Liner	Stroke	SPM	Press.	GPM	Jet Vel	DP Av	DC Av	Bit HP	HHP/SQIN	Pump HHP
1	/ /	8.00 / 7.00 /	/ /		0	0	0		0	0	0
	/ /	/ /	/ /								

Survey MD	Angle	Azimuth	Direction	TVD	N/S Coordinates	E/W Coordinates	Vertical Section	DLS

Hours	From	Act-Cat	Operations Covering 24 Hours Ending at Midnight (Total Hours Reported: 24.0)
2.50	0	01 -	FINISH HOOKING UP BLOOIE LINE.
7.00	250	01 - 59	PICK UP MUD MOTOR AND DRILL MOUSEHOLE. HAD TROUBLE WITH RUBBLE FALLING IN WHILE TRYING TO INSTALL MOUSEHOLE.
2.50	850	01 - 07	PICK UP BIT #1, BS W/ FLOAT, 6 X 6" DC'S. RUN IN AND TAG CMT AT 250.6'. HELD SAFETY MEETING ON AIR DRILLING. PER
		-	FORMED FINAL RIG INSPECTION PRIOR TO DRILLING OUT SHOE TRACK.
1.00	1200	01 - 15	UNLOAD HOLE WITH AIR. DRILL OUT SHOE JT AND SHOE. PUMPING AIR AND MIST AT 2000 CFM, 300 PSI.
5.50	1300	01 - 02	DRILL 7 7/8" HOLE W/ MIST FROM 299' TO 540'. 241', AVG ROP: 43.8 FPH. HOLDING RPM DOWN TO 60 UNTIL DRILL COLLARS
		-	ARE OUT OF CASING.
		01 - 02	HIT WATER AT 460'. PRODUCING EXCESSIVE AMOUNTS OF WATER.
0.50	1530	01 - 05	POOH TO SHOE. MONITORED WELL. NO FLOW. COULD NOT SEE WATER LEVEL IN WELL.
1.00	1900	01 - 05	TIH TO RESUME DRILLING.
1.00	2000	01 - 02	DRILL FROM 540' TO 594'. 54', AVG ROP: 54 FPH.
0.50	2100	01 - 08	SURVEY AT 593'. 1/2 DEGREE INCLINATION.
1.00	2130	01 - 02	POOH AND LAY DOWN 10 JOINTS DRILL PIPE.
1.00	2230	01 - 05	PICK UP 10 6" DC'S. 16 TOTAL COLLARS IN BHA #1.
0.50	2330	01 - 02	DRILL FROM 594' TO 610'.

Safety: TIP, HAND INJURIES, DRILLING W/ AIR

24 Hr Summary: FINISH RIGGING UP. DRILL SHOE. DRILL FROM 299' TO 610'.

Projected Opns: SET PUMP TO PUMP OFF RESERVE PIT WATER. RESUME DRILLING AND HAULING WATER TO PRODUCTION SWD WELL.

Remarks:
SAFETY MTG: 2 TOTAL FOR WELL: 14 DAILY RIG HRS: 132, TOTAL RIG HRS: 762; DAILY OTHER HRS: 24, TOTAL OTHER HRS: 222

DIESEL USED LAST 24 HRS: 582 GALS

SET TWO FRAC TANKS TO PUMP WATER INTO FROM RESERVE PIT.

Daily Mud Cost: $	Daily Tangible Cost: $	Daily Well Cost: $ 17,833	Incidents: NO INCIDENT REPORTED
Cum Mud Cost: $	Cum Tangible Cost: $ 4,772	Cum Well Cost: $ 132,192	Total Appr: $ 213,738
Drill Water:	Potable Water:	Fuel: 4340	Bulk Weight: Neat Cement: Blended:
Country: U.S.A.	Rig: NABORS 414	Rig Phone: 713-680-4366	Drilling Rep: J.E. MARSHALL
Field: ORANGEVILLE	Lease: ZOIN'S FEDERAL	Well No: 35-137	Well ID: HK7261 - 0
	API No: 43-015-30587	APS No: UWOCBD2057DRL	Date: 14-Jun-2003 Page: 04

JUN 16 2003

DIV. OF OIL, GAS & MINING

Drilling Activity Report

Measured Depth: 298'	TVD: 298'	DSTD:	Proposed MD: 4,290'	Proposed TVD: 4,290'	
DOL: 5	DFC: 10	Spud Date: 04-Jun-2003	Daily Footage:	Daily Rot Hrs:	Total Rot Hrs:
Torq:	Drag:	Rot Wgt:	P/U Wgt:	Slack Off Wgt:	Wind: / Seas: / Dar: / POB:
Last Casing Size: 8.625"	Set At: 290'	MD 290'	TVD	Shoe Test:	EMW Leakoff?
Cum Rot Hrs On Casing: 0.0	Cum Rot Hrs On Casing Since Last Caliper: 0.0		Depth Worst Wear:	% Remaining:	
Liner Size:	Set At: MD	TVD	Liner Top At: MD	TVD	
Mud Co:	Type:	Sample From:	Wt:	FV:	PV: / YP: / Gel: /
WL API:	HTHP:	FC (1/32) API:	HTHP:	Solids:	% Oil: / %Water: / % Sand: / MBT: / Ph:
Pm:	Pf/Mf: /	Calc:	Cl:	Ca:	Bent: / Solids LGC/LG: / / ADS/Bent: /
Drlg Gas:	Max Gas:	Conn Gas:	Trip Gas:	Trip Cl:	Remarks:

Bit Number	IADC	Size	Manufacturer	Serial number	Jets (Quantity - Size)	TFA	MD In	MD Out	TVD Out
					- / - / - / - / -				
					- / - / - / - / -				

Type	Feet	Hours	WOB	RPM	Motor RPM	I-Row	O-Row	DC	Loc	B	G	Char	?Pull	Cost/Ft
			/	/										$
			/	/										$

Total Length of BHA: BHA Description:

Hrs On Jars: Hours Since Last Inspection:

Bit Nzm	Liner	Stroke	SPM	Press.	GPM	Jet Vel	DP Av	DC Av	Bit HHP	HHP/SQIN	Pump HHP
	/ /	/ /	/ /								
	/ /	/ /	/ /								

Survey MD	Angle	Azimuth	Direction	TVD	N/S Coordinates	E/W Coordinates	Vertical Section	DLS

Hours	From	Act-Cat	Operations Covering 24 Hours Ending at Midnight (Total Hours Reported: 23.0)
6.60	0	01 -	CONTINUE RIG UP OPERATIONS. RIG 97% RIGGED UP.
1.00	630	01 - 39	DRILL OUT RAT HOLE. INSTALL KELLY SOCK.
10.00	630	01 - 13	NIPPLE UP DRILLING SPOOL, DOUBLE RAM BOP, ROTATING HEAD. INSTALL 2ND VALVE ON KILL LINE. INSTALL NEW CHOKES ON CH
		-	OKE MANIFOLD. RUN LINES FROM CHOKE MANIFOLD TO FLARE PIT.
3.00	1630	01 - 14	TEST BOP, CHOKE AND KILL VALVES AND LINES, U & L KELLY VALVES, STAND PIPE, FLOOR VALVES TO 250 PSI LOW FOR 5 MIN AN
		-	D 2000 PSI HIGH FOR 10 MIN. PERFORM ACCUMULATOR TEST, INITIAL PRESS 2900 PSI FINAL PRESS 2400 PSI. PRECHARGE 850
		-	PSI.
0.50	2030	01 - 16	TEST 8 5/8" CASING TO 1000 PSI FOR 30 MINUTES.
3.00	2100	01 - 39	INSTALL BLOOIE LINE. MOVE DRILL COLLARS TO BE PICKED UP.
		01 - 39	RECEIVED 56 JOINTS 5 1/2" CASING ON LOCATION. 109 TOTAL PLUS TWO MARKER JOINTS ON LOC.
		01 - 39	DAYLIGHT CREW ONE MAN SHORT.
		01 - 39	PERFORMED INITIAL RIG INSPECTION. FOUND SOME MINOR PROBLEMS. WILL REINSPECT PRIOR TO DRILLING OUT SHOE.
		01 - 39	NOTIFIED MARK JONES W/ STATE OF UTAH OF BOP TEST. NOTIFIED DON STEPHENS OF PRICE BLM VIA ANSWERING MACHINE OF BOP
		-	TEST.
		-	

Safety: TIP, HAND INJURIES, PINCH POINTS, EMERGENCY SIGNALS AND REQUIREMENTS

24 Hr Summary: RIG UP, NIPPLE UP AND TEST BOP.

Projected Oprn: FINISH INSTALLING BLOOIE LINE, PICK UP BHA. DRILL OUT SHOE. DRILL AHEAD.

Remarks:
SAFETY MTG: 2 TOTAL FOR WELL: 12 DAILY RIG HRS: 131, TOTAL RIG HRS: 630; DAILY OTHER HRS: 44, TOTAL OTHER HRS: 198

DIESEL USED LAST 24 HRS: 298 GALS

Daily Mud Cost: $	Daily Tangible Cost: $	Daily Well Cost: $ 12,078	Incidents: NO INCIDENT REPORTED
Cum Mud Cost: $	Cum Tangible Cost: $ 4,772	Cum Well Cost: $ 114,359	Total Appr: $ 213,738
Drill Water:	Potable Water:	Fuel: 5022	Bulk Weight: / Neat Cement: / Blended:
Country: U.S.A.	Rig: NABORS 414	Rig Phone: 713-580-4355	Drilling Rep: J.E. MARSHALL
Field: ORANGEVILLE	Lease: ZOIN'S FEDERAL	Well No: 36-137	Well ID: HK7251 - 0
	API No: 43-015-30587	AFE No: UWDCSD2057DRL	Date: 13-Jun-2003 Page: of

RECEIVED

JUN 1 9 2003

DIV. OF OIL, GAS & MINING

Drilling Activity Report

Measured Depth: 298'	TVD: 298'	PBTD:	Proposed MD: 4,290'	Proposed TVD: 4,290'		
DOL: 4	DSS: 3	Spud Date: 04-Jun-2003	Daily Footage:	Daily Rot Hrs:	Total Rot Hrs:	
Torq:	Drag:	Roc Wgt:	P/U Wgt:	Slack Off Wgt:	Wind:	Seas: / Bar: POB:
Last Casing Size: 8.625"	Set At: 298'	MD 298'	TVD	Shoe Test:	EMW	Leakoff?
Cum Rot Hrs On Casing: 0.0	Cum Rot Hrs On Casing Since Last Caliper: 0.0		Depth Worst Wear:	% Remaining:		
Liner Size:	Set At:	MD	TVD	Liner Top At:	MD	TVD
Mud Co:	Type:		Sample From:	Wt:	FV:	PV: YP: Gel: /
WL API:	HTHP:	FC (1/32) API:	HTHP:	Solids:	% Oil:	%Water: % Sand: MBT: Ph:
Pm:	Pf/Mf: /	Carb:	Cl:	Ca:	Bent:	Solids %HG/LG: / MBS/Bent: /

Drlg Gas:	Max Gas:	Conn Gas:	Trip Gas:	Trip Cl:	Remarks:

Bit Number	IADC	Size	Manufacturer	Serial number	Jets (Quantity - Size)	TFA	MD In	MD Out	TVD Out
					- / - / - / - / -				
					- / - / - / - / -				

Type	Feet	Hours	WOB	RPM	Motor RPM	I-Row	O-Row	DC	Loc	B	G	Char	?Pull	Cost/Ft
			/	/										$
			/	/										$

Total Length of BHA: BHA Description:

Hrs On Jars: Hours Since Last Inspection:

Bit Run	Liner	Stroke	SPM	Press.	GPM	Jet Vel	DP Av	DC Av	Bit HHP	HHP/SQIN	Pump HHP
	/ /	/ /	/ /								
	/ /	/ /	/ /								

Survey MD	Angle	Azimuth	Direction	TVD	N/S Coordinates	E/W Coordinates	Vertical Section	DLS

Hours	From	Act-Cat	Operations Covering 24 Hours Ending at Midnight	Total Hours Reported: 24.0
24.00	0	01 -	CONTINUE RIG UP OPERATIONS. NUMEROUS PROBLEMS ENCOUNTERED WHILE RIGGING UP. EXAMPLE: ROTARY TABLE NEW AND DIDN'T	
		-	FIT EXACTLY RIGHT, NO SPARE PARTS SINCE RIG STACKED OUT A SHORT PERIOD OF TIME, WIND WALLS AND STAIRS BENT DURING	
		-	MOVE. RIG 90% RIGGED UP, WEATHERFORD 99% RIGGED UP.	
		01 - 39	RECEIVED 54 JOINTS 5 1/2" CASING ON LOCATION. REMAINING CASING SCHEDULE FOR AM.	
		01 - 35	NOTE: DAYLIGHT CREW SHORT ONE PERSON.	
		-		
		-		
		-		
		-		
		-		
		-		
		-		
		-		
		-		
		-		

Safety: TIF, HAND INJURIES, PINCH POINTS, RIGGING UP, CREW CHANGE

24 Hr Summary: CONTINUE TO REPAIR AND MAKE ADJUSTMENTS TO RIG. CONTINUE TO RIG UP.

Projected Oprn: NIPPLE UP AND TEST BOPE. DRILL OUT SURFACE CASING AND DRILL PRODUCTION HOLE

Remarks:
SAFETY MTG: 2 TOTAL FOR WELL: 10 DAILY RIG HRS: 120, TOTAL RIG HRS: 499; DAILY OTHER HRS: 98, TOTAL OTHER HRS: 154

DIESEL USED LAST 24 HRS: 186 GALS

Daily Mud Cost: $	Daily Tangible Cost: $	Daily Well Cost: $ 14,007	Incidents: NO INCIDENT REPORTED
Cum Mud Cost: $	Cum Tangible Cost: $ 4,772	Cum Well Cost: $ 102,281	Total Appr: $ 213,735
Drill Water:	Potable Water:	Fuel: 3534	Bulk Weight: Neat Cement: Blended:
Country: U.S.A.	Rig: NABORS 414	Rig Phone: 713-660-4365	Drilling Rep: J.E. MARSHALL
Field: ORANGEVILLE	Lease: ZDIN'S FEDERAL	Well No: 36-137	Well ID: HK7251 - 0
	API No: 43-015-30687	AFE No: UWDCB02057DRL	Date: 12-Jun-2003 Page: of

RECEIVED
JUN 16 2003
DIV. OF OIL, GAS & MINING

ChevronTexaco **Drilling Activity Report**

Measured Depth: 298 '	TVD: 298 '	PBTD:	Proposed MD: 4,290 '	Proposed TVD: 4,290 '	
DOL: 3	DSS: 0	Spud Date:	Daily Footage:	Daily Rot Hrs:	Total Rot Hrs:
Tang:	Drag:	Rot Wgt:	P/U Wgt:	Slack Off Wgt:	Wind: / Seas: / Bar: / POB:
Last Casing Size: 9.625 ''	Set At: 299 ' MD	299 ' TVD	Shoe Test: EMW	Leakoff?	
Cum Rot Hrs On Casing: 0.0	Cum Rot Hrs On Casing Since Last Caliper: 0.0	Depth Worst Wear:	% Remaining:		
Liner Size:	Set At: MD	TVD	Liner Top At: MD	TVD	
Mud Co:	Type:	Sample From: FLOW	Wt:	PV:	YP: / Gel: /
WL API:	HTHP:	FC (1/32) API:	HTHP:	Solids:	% Oil: / Water: / % Sand: / MBT: / Ph:
Pm:	Pf/Mf: /	Carb:	Cl:	Ca:	Sant: / Solids HC/LG: / KCl/Sant: /

Drlg Gas:	Max Gas:	Conn Gas:	Trip Gas:	Trip Cl:	Remarks:

Bit Number	IADC	Size	Manufacturer	Serial number	Jets (Quantity - Size)	TFA	MD In	MD Out	TVD Out
					- / - / - / - / -				
					- / - / - / - / -				

Type	Feet	Hours	WOB	RPM	Motor RPM	I-Row	O-Row	DC	Loc	B	G	Char	?Pull	Cost/Ft
			/	/										
			/	/										

Total Length of BHA: BHA Description:

Hrs On Jars: Hours Since Last Inspection:

Bit Num	Liner	Strokes	SPM	Press.	GPM	Jet Vel	DP Av	DC Av	Bit HP	HHP/SQIN	Pump HHP
	/ /	/ /	/ /								
	/ /	/ /	/ /								

Survey MD	Angle	Azimuth	Direction	TVD	N/S Coordinates	E/W Coordinates	Vertical Section	DLS

Hours	From	Act-Cat	Operations Covering 24 Hours Ending at Midnight	Total Hours Reported: 24.0
7.00	0	01 - 29	WOD	
17	700	01 - 39	CONTINUE TO RIG UP. REPAIRED CROWN WHEEL BUSHING AND STRUNG DRILLING LINE. MAKE MISC SAFETY AND RIG REPAIRS	
		-	AROUND RIG WITH WELDER. RAISED DERRICK. RIG 100% MOVED IN, 85% RIGGED UP. WEATHERFORD 80% RIGGED UP.	
		-		
		-		
		-		
		-		
		-		
		-		
		-		
		-		
		-		
		-		
		-		
		-		

Safety: (TIP) DISCUSSED TIP / STOP PROGRAMS. WORKING AT HEIGHTS.

24 Hr Summary: RIG UP AND MAKE REPAIRS TO RIG. RIG 85% RIGGED UP / AIR PACKAGE 80% RIGGED UP.

Projected Ops: FINISH RIGGING UP. TEST BOPS. DRILL OUT RAT HOLE. PICK UP BHA AND BEGIN DRILLING 7 7/8" HOLE SECTION.

Remarks:
SAFETY MTG: 2 TOTAL FOR WELL: 8 DAILY RIG HRS: 109, TOTAL RIG HRS: 379; DAILY OTHER HRS: 20, TOTAL OTHER HRS: 56

DIESEL USED LAST 24 HRS: 00 GALS

Daily Mud Cost:	Daily Tangible Cost: $ 0	Daily Well Cost: $ 17,747	Incidents: NO INCIDENT REPORTED	
Cum Mud Cost: $ 0	Cum Tangible Cost: $ 4,222	Cum Well Cost: $ 95,274	Total Appr: $ 213,730	
Drill Water:	Potable Water:	Fuel: 2720	Bulk Weight:	Neat Cement: Blended:
Country: U.S.A.	Rig: NABORS 414	Rig Phone: 713-560-4355	Drilling Rep: J.E. MARSHALL	
Field: GRANDVILLE	Lease: SOUTH FEDERAL	Well No: 35-137	Well ID: HK7251 -0	
	API No: 43-015-30587	AFE No: UNKNAD0057DRL	Date: 11-JUN-2003	Page: 1 Of 1

RECEIVED

JUN 16 2003

DIV. OF OIL, GAS & MINING

ChevronTexaco

Drilling Activity Report

Measured Depth: 298 '	TVD: 298 '	PBTD:		Proposed MD: 4,290 '	Proposed TVD: 4,290 '		
DSF: 2	DSW: 0	Spud Date:	Daily Footage:	Daily Rot Hrs:	Total Rot Hrs:		
Torq:	Drag:	Rot Wgt:	P/U Wgt:	Slack Off Wgt:	Wind:	Seas: /	Bar:	PCR:
Last Casing Size:	Set At:	MD	TVD	Shoe Test:	EMW	Leakoff?	
Cum Rot Hrs On Casing: 0.0	Cum Rot Hrs On Casing Since Last Caliper: 0.0	Depth Worst Wear:	% Remaining:				
Liner Size:	Set At:	MD	TVD	Liner Top At:	MD	TVD	
Mud Co:	Type:	Sample From: FLOW	Wt:	FV:	PV:	YP:	Gel: /
WL	API:	HTHP:	FC (1/32)	API:	HTHP:	Solids:	% Oil:	Water:	% Sand:	MBT:	Ph:
Pm:	Pf/Mf: /	Carb:	Cl:	Ca:	Bent:	Solids HG/LG: /	HGS/Bent: /				

Drlg Gas:	Max Gas:	Conn Gas:	Trip Gas:	Trip Cl:	Remarks:

Bit Number	IADC	Size	Manufacturer	Serial number	Jets (Quantity - Size)	TFA	MD In	MD Out	TVD Out
					- / - / - / - / -				
					- / - / - / - / -				

Type	Feet	Hours	WOB	RPM	Motor RPM	I-Row	O-Row	DC	Loc	B	G	Char	?Pull	Cost/Ft
			/	/										
			/	/										

Total Length of BHA: BHA Description:

Hrs On Jars: Hours Since Last Inspection:

Bit Nzl	Liner	Stroke	SPM	Press.	GPM	Jet Vel	DP AV	DC AV	Bit HHP	HHP/SQIN	Pump HP
	/ /	/ /	/ /								
	/ /	/ /	/ /								

Survey MD	Angle	Azimuth	Direction	TVD	N/S Coordinates	E/W Coordinates	Vertical Section	DLS

Hours	From	Act-Cat	Operations Covering 24 Hours Ending at Midnight	Total Hours Reported: 24.0
7.00	0	01 - 35	WCD	
12	700	01 - 39	CONTINUE RIGGING UP NAGORS 414. RIG 100% MOVED IN, 75% RIGGED UP. BUSHING FOR THE CROWN WHEELS WAS	
		-	MANUFACTURED INCORRECTLY. MECHANIC TOOK PART TO MACHINE SHOP TO MAKE MODIFICATIONS. MOVED IN WEATHERFORD AIR	
		-	DRILLING PACKAGE. WEATHERFORD 100% MOVED IN AND 80% RIGGED UP.	
5.00	1900	01 - 30	SHUT DOWN FOR NIGHT.	
		-		
		-		
		-		
		-		
		-		
		-		
		-		
		-		
		-		
		-		

Safety: (TIP) WORKING IN DUSTY CONDITIONS, WORKING WITH THIRD PARTY VENDORS.

24 Hr Summary: WORK ON CROWN. MOVE IN AND RIG UP AIR PACKAGE. RIG 75% RIGGED UP / AIR 80% RIGGED UP.

Projected Oper: FINISH REPAIRING CROWN. CONTINUE TO RIG UP.

Remarks:
SAFETY MTG: 1 TOTAL FOR WELL: 6 DAILY RIG HRS: 12H, TOTAL RIG HRS: 270; DAILY OTHER HRS: 28, TOTAL OTHER HRS: 36
DIESEL USED LAST 24 HRS: 50 GALS

Daily Mud Cost:	Daily Tangible Cost: $ 0	Daily Well Cost: $14,150	Incidents: NO INCIDENT REPORTED
Cum Mud Cost: $ 0	Cum Tangible Cost: $4,772	Cum Well Cost: $70,487	Total Appr: $ 213,738
Drill Water:	Potable Water:	Fuel:	Bulk Weight:	Neat Cement:	Blended:
Country: U.S.A.	Rig: NABORS 414	Rig Phone: 713-560-4355	Drilling Rep: J.E. MARSHALL
Field: GRANDRUV/LG	Lease: KUN'S FEDERAL	Well No: 35-137	Well ID: HK7251 -0
	API No: 43-015-30587	AFE No: UNICRD2057DRL	Date: 10-JUN-2003	Page: 1 of 1

RECEIVED

JUN 16 2003

DIV. OF OIL, GAS & MINING

010

STATE OF UTAH
DEPARTMENT OF NATURAL RESOURCES
DIVISION OF OIL, GAS AND MINING

FORM 6

ENTITY ACTION FORM

Operator: Chevron U.S.A. Inc.
Address: P.O. Box 618
city Orangeville
state Ut zip 84537

Operator Account Number: N 0210

Phone Number: (435) 748-5395

Well 1

API Number	Well Name		QQ	Sec	Twp	Rng	County
4301530422	Zion's Federal 35-135		NESW	35	16S	7E	Emery
Action Code	Current Entity Number	New Entity Number	Spud Date			Entity Assignment Effective Date	
A	99999	13810	6/5/2003			6/19/03	

Comments:
-

Well 2

API Number	Well Name		QQ	Sec	Twp	Rng	County
4301530587	Zion's Federal 35-137		NESE	35	16S	7E	
Action Code	Current Entity Number	New Entity Number	Spud Date			Entity Assignment Effective Date	
A	99999	13811	6/4/2003			6/19/03	

Comments:
-

Well 3

API Number	Well Name		QQ	Sec	Twp	Rng	County
Action Code	Current Entity Number	New Entity Number	Spud Date			Entity Assignment Effective Date	

Comments:

ACTION CODES:
- A - Establish new entity for new well (single well only)
- B - Add new well to existing entity (group or unit well)
- C - Re-assign well from one existing entity to another existing entity
- D - Re-assign well from one existing entity to a new entity
- E - Other (Explain in 'comments' section)

Kenneth W. Jackson
Name (Please Print)

Signature

Regulatory Specialist
Title

6/17/2003
Date

(5/2000)

RECEIVED
JUN 17 2003
DIV. OF OIL, GAS & MINING

ChevronTexaco

Mid-Continent Business Unit
Facsimile Transmittal Sheet

DATE:

TO:

Company: State of Utah

Name: Carol Daniels

Phone:

Fax: 801-359-3940

FROM:

Company: ChevronTexaco

Name: Darla Nelson

Phone: 281-561-3790

Fax: 281-561-3645

No. of pages including cover sheet:

MESSAGE: Weekly morning reports

RECEIVED
JUN 24 2003
DIV. OF OIL, GAS & MINING

011

Drilling Activity Report

Measured Depth: 4,263'	TVD: 4,263'	PBTD:	Proposed MD: 4,290'	Proposed TVD: 4,290'	
DOL: 15	DFS: 10	Spud Date: 04-Jun-2003	Daily Footage:	Daily Rot Hrs:	Total Rot Hrs: 51.5
Torq:	Drag:	Rot Wgt:	P/U Wgt:	Slack Off Wgt:	Wind: / Seas: / Bar: / POB:
Last Casing Size: 5.500"	Set At: 4,262' MD	4,262' TVD	Shoe Test: EMW	Leakoff?	
Cum Rot Hrs On Casing: 0.0	Cum Rot Hrs On Casing Since Last Caliper:		Depth Worst Wear:	% Remaining:	
Liner Size:	Set At: MD	TVD	Liner Top At: MD	TVD	

Mud Co:	Type:	Sample From:	Wt:	FV:	PV:	YP:	Gel: /		
WL API: HTHP:	FC (1/32) API: HTHP:	Solids:	% Oil:	%Water:	% Sand:	MBT:	Ph:		
Pm:	Pf/Mf: /	Carb:	Cl:	Ca:	Bent:	Solids %HG/LG: /	%DS/Bent: /		

Drlg Gas:	Max Gas:	Conn Gas:	Trip Gas:	Trip Cl:	Remarks:

Bit Number	IADC	Size	Manufacturer	Serial number	Jets (Quantity - Size)	TFA	MD In	MD Out	TVD Out
					- / - / - / - / - / -				
					- / - / - / - / - / -				

Type	Feet	Hours	WOB	RPM	Motor RPM	I-Row	O-Row	DC	Loc	B	G	Char	?Pull	Cost/Ft
			/	/										$
			/	/										$

Total Length of BHA: BHA Description:

Hrs On Jars: Hours Since Last Inspection:

Bit Num	Liner	Stroke	SPM	Press.	GPM	Jet Vel	DP Av	DC Av	Bit HHP	HHP/SQIN	Pump HHP
	/ /	/ /	/ /								
	/ /	/ /	/ /								

Survey MD	Angle	Azimuth	Direction	TVD	N/S Coordinates	E/W Coordinates	Vertical Section	DLS

Hours	From	Act-Cat	Operations Covering 24 Hours Ending at Midnight	Total Hours Reported: 6.0
6.00	0	01 -	WAIT ON DAYLIGHT. FINAL REPORT. NABORS 414 TO STATE OF UTAH 201 WELL @ 06:00	
		-		
		-		
		-		
		-		
		-		
		-		
		-		
		-		
		-		
		-		
		-		
		-		
		-		
		-		

Safety: TIF, MOVING THE RIG

24 Hr Summary:

Projected Oprn:

Remarks:
SAFETY MTG: 1 TOTAL FOR WELL: 36 DAILY RIG HRS: 0, TOTAL RIG HRS: 1818; DAILY OTHER HRS: 0, TOTAL OTHER HRS: 830

DIESEL USED LAST 24 HRS: 0 GALS

Daily Mud Cost: $	Daily Tangible Cost: $	Daily Well Cost: $ 3,155	Incidents: NO INCIDENT REPORTED
Cum Mud Cost: $ 300	Cum Tangible Cost: $ 62,192	Cum Well Cost: $ 389,263	Total Appr: $ 213,738

Drill Water:	Potable Water:	Fuel: 2300	Bulk Weight:	Neat Cement: Blended:
Country: U.S.A.	Rig: NABORS 414	Rig Phone: 713-580-4355	Drilling Rep: J.E. MARSHALL	
Field: OTHER	Lease: ZOIN'S FEDERAL	Well No: 35-137	Well ID: HK7251 - 0	
	API No: 43-015-30687	AFE No: UWDCBD2057DRL	Date: 23-Jun-2003	Page: Of

T16S R01E SEC-35

RECEIVED
JUN 24 2003
DIV. OF OIL, GAS & MINING

Drilling Activity Report

Measured Depth: 4,263'	TVD: 4,263'	PBTD:	Proposed MD: 4,290'	Proposed TVD: 4,290'	
DOL: 14	DFS: 9	Spud Date: 04-Jun-2003	Daily Footage:	Daily Rot Hrs:	Total Rot Hrs: 51.5
Torq:	Drag:	Rot Wgt:	P/U Wgt:	Slack Off Wgt:	Wind: / Seas: / Bar: / POB:
Last Casing Size: 5.500"	Set At: 4,262' MD 4,262' TVD	Shoe Test: EMW	Leakoff?		
Cum Rot Hrs On Casing: 0.0	Cum Rot Hrs On Casing Since Last Caliper:	Depth Worst Wear:	% Remaining:		
Liner Size:	Set At: MD TVD	Liner Top At: MD TVD			

Mud Co:	Type:	Sample From:	Wt:	FV:	PV:	YP:	Gel: /		
WL API: HTHP:	FC (1/32) API: HTHP:	Solids:	% Oil:	%Water:	% Sand:	MBT:	Ph:		
Pm:	Pf/Mf: /	Carb:	Cl:	Ca:	Bent:	Solids %HG/LG: /	%DS/Bent: /		

Drlg Gas:	Max Gas:	Conn Gas:	Trip Gas:	Trip Cl:	Remarks:

Bit Number	IADC	Size	Manufacturer	Serial number	Jets (Quantity - Size)	TFA	MD In	MD Out	TVD Out
					- / - / - / - / -				
					- / - / - / - / -				

Type	Feet	Hours	WOB	RPM	Motor RPM	I-Row	O-Row	DC	Loc	B	G	Char	?Pull	Cost/Ft
			/	/										$
			/	/										$

Total Length of BHA: BHA Description:

Hrs On Jars: Hours Since Last Inspection:

Bit Num	Liner	Stroke	SPM	Press.	GPM	Jet Vel	DP Av	DC Av	Bit HHP	BHHP/SQIN	Pump HHP
	/ /	/ /	/ /								
	/ /	/ /	/ /								

Survey MD	Angle	Azimuth	Direction	TVD	N/S Coordinates	E/W Coordinates	Vertical Section	DLS

Hours	From	Act-Cat	Operations Covering 24 Hours Ending at Midnight	Total Hours Reported: 25.0
2.00	0	01-	FINISH SETTING CASING SLIPS. MAKE ROUGH CUT ON CASING. INSTALL LINCOLN HAT ON HEAD.	
5.00	100	01- 39	FINISH NIPPLING DOWN BOPE. CLEAN MUD PITS. RELEASE RIG AT 0600 22/JUNE/2003.	
16.00	600	01- 39	RIG DOWN AND PREPARE TO MOVE.	
		-		
		-		
		-		
		-		
		-		
		-		
		-		
		-		
		-		
		-		
		-		
		-		

Safety: TIF, RIGGING DOWN

24 Hr Summary: FINISH SETTING CASING SLIPS. MAKE ROUGH CUT ON CASING. RIG DOWN.

Projected Oprn: MOVE RIG TO STATE OF UTAH 31-201

Remarks:
SAFETY MTG: 2 TOTAL FOR WELL: 35 DAILY RIG HRS: 132, TOTAL RIG HRS: 1818; DAILY OTHER HRS: 36, TOTAL OTHER HRS: 830

DIESEL USED LAST 24 HRS: 242 GALS

Daily Mud Cost: $	Daily Tangible Cost: $	Daily Well Cost: $ 20,963	Incidents: NO INCIDENT REPORTED
Cum Mud Cost: $ 300	Cum Tangible Cost: $ 62,192	Cum Well Cost: $ 386,108	Total Appr: $ 213,738

Drill Water:	Potable Water:	Fuel: 2300	Bulk Weight:	Neat Cement:	Blended:
Country: U.S.A.	Rig: NABORS 414	Rig Phone: 713-580-4355	Drilling Rep: J.E. MARSHALL		
Field: OTHER	Lease: ZOHN'S FEDERAL	Well No: 35-137	Well ID: HK7251		
API No: 43-015-30587	APE No: UWDCBD2057DRL	Date: 22-Jun-2003	Page: Of		

T16S R09E SEC-35

RECEIVED
JUN 24 2003
DIV. OF OIL, GAS & MINING

Drilling Activity Report

Measured Depth: 4,263'	TVD: 4,263'	PBTD:	Proposed MD: 4,290'	Proposed TVD: 4,290'	
DOL: 13	DFS: 8	Spud Date: 04-Jun-2003	Daily Footage:	Daily Rot Hrs:	Total Rot Hrs: 51.5
Torq:	Drag:	Rot Wgt:	P/U Wgt:	Slack Off Wgt:	Wind: / Seas: / Bar: / POB:
Last Casing Size: 5.500"	Set At: 4,262' MD	4,262' TVD	Shoe Test: EMW	Leakoff?	
Cum Rot Hrs On Casing: 0.0	Cum Rot Hrs On Casing Since Last Caliper:	Depth Worst Wear:	% Remaining:		
Liner Size:	Set At: MD	TVD	Liner Top At: MD	TVD	

Mud Co:	Type:	Sample From:	Wt:	FV:	PV:	YP:	Gel: /	
WL API: HTHP:	FC (1/32) API: HTHP:	Solids:	% Oil:	%Water:	% Sand:	MBT:	Ph:	
Pm:	Pf/Mf: /	Carb:	Cl:	Ca:	Bent:	Solids %HG/LG: /	%DS/Bent: /	

Drlg Gas:	Max Gas:	Conn Gas:	Trip Gas:	Trip Cl:	Remarks:

Bit Number	IADC	Size	Manufacturer	Serial number	Jets (Quantity - Size)	TFA	MD In	MD Out	TVD Out
					- / - / - / - / -				
					- / - / - / - / -				

Type	Feet	Hours	WOB	RPM	Motor RPM	I-Row	O-Row	DC	Loc	B	G	Char	?Pull	Cost/Ft
			/	/										$
			/	/										$

Total Length of BHA: BHA Description:

Hrs On Jars: Hours Since Last Inspection:

Bit Num	Liner	Stroke	SPM	Press.	GPM	Jet Vel	DP Av	DC Av	Bit HHP	HHP/SQIN	Pump HHP
	/ /	/ /	/ /								
	/ /	/ /	/ /								

Survey MD	Angle	Azimuth	Direction	TVD	N/S Coordinates	E/W Coordinates	Vertical Section	DLS

Hours	From	Act-Cat	Operations Covering 24 Hours Ending at Midnight	Total Hours Reported: 25.0
6.00	0	01 -	TIH. TAG AT 4243'. 20' FILL. WASH AND REAM TO BOTTOM W/ NO PROBLEM. CIRC AND COND.	
6.00	600	01 - 07	HOLD PJSM ON LAYING DOWN PIPE. RU FRANKS LAY DOWN MACHINE. POOH AND LAY DOWN DRILL STRING. NO HOLE PROBLEMS.	
6.50	1200	01 - 08	HELD PJSM ON RUNNING CASING. PICK UP AND RUN: FS, 1 JT 5 1/2" 17#, L-80, LTC CSG, FC, 88 JTS CSG, EXTERNAL CSG PKR	
		-	, STAGE COLLAR, 16 JTS CSG. TAG AT 4248'.	
3.00	1830	01 - 09	HELD PJSM ON CEMENTING. RU SCHLUMBERGER. PUMP 200 BBLS FW WITH RIG PUMP. HAD SMALL AMOUNT OF SPERATIC RETURNS.	
		-	PRESS TEST LINES TO 3M. PUMP 20 BBLS GELLED WTR, 10 BBLS WTR, MIX AND PUMP 140 SKS (40 BBLS) 10:1 RFC CL G CMT W/	
		-	1/4 PPS CELLOFLAKE @ 14.2 PPG, 1.61 FT3/SK, 7.98 GALS WTR/SK. WASHED LINES AND DROP PLUG. DISPLACE CMT W/ 99 BBLS	
		-	FW. BUMP PLUG FROM 200 PSI TO 750 PSI. CHECK FLOATS, HELD. CIP @ 21:00. NO RETURNS.	
		01 - 09	RECIP AND WASH CSG TO BOTTOM WHILE CEMENTING. 5 1/2" CASING SET AT 4262', FLOAT COLLAR @ 4220', 2 20' MARKER JTS F	
		-	ROM 3933' TO 3974', ECP PKR ELEMENT FROM 659' TO 655', DV STAGE TOOL @ 646'. PRESSURE ECP PACKER FROM 1000 PSI TO	
		-	2200 PSI IN 100 TO 200 PSI INCREMENTS. POSITIVE INDICATION OF PKR SETTING AT 2200 PSI. PRESS BLED TO 1500 PSI. P	
		-	RESS BACK TO 1750 PSI TO ENSURE PROPER INFLATION. RELEASE PRESS AND DROP BOMB TO OPEN DV.	
1.00	2130	01 - 13	MAKE PREPARATIONS TO LIFT BOP STACK WHILE WOC.	
1.00	2230	01 - 09	PRESS TO 700 PSI AND OPEN DV TOOL. PUMP 40 BBLS WATER SPACER W/ NO RETURNS. MIX AND PUMP 58 BBLS (200 SKS) 10:1 C	
		-	MT W/ 1/4 PPS CELEFLAKE @ 14.2 PPG, 1.61 FT3/SK, 7.98 GALS WTR/SK, DROP TOP PLUG AND DISPLACE CMT W/ 15 BBLS FW. B	

Safety: TIF, PINCH POINTS, LAYING DOWN PIPE, RUNNING CASING, CEMENTING

24 Hr Summary: LAY DOWN DRILL STRING. RUN AND CMT 5 1/2" PRODUCTION CASING.

Projected Oprn: PREPARE TO MOVE TO NEXT LOCATION.

Remarks:
SAFETY MTG: 5 TOTAL FOR WELL: 33 DAILY RIG HRS: 132, TOTAL RIG HRS: 1686; DAILY OTHER HRS: 250, TOTAL OTHER HRS: 794

DIESEL USED LAST 24 HRS: 372 GALS

Daily Mud Cost: $	Daily Tangible Cost: $ 57,420	Daily Well Cost: $ 98,499	Incidents: NO INCIDENT REPORTED
Cum Mud Cost: $ 300	Cum Tangible Cost: $ 82,192	Cum Well Cost: $ 365,145	Total Appr: $ 213,738

Drill Water:	Potable Water:	Fuel: 2542	Bulk Weight:	Neat Cement:	Blended:
Country: U.S.A.	Rig: NABORS 414	Rig Phone: 713-580-4355	Drilling Rep: J.E. MARSHALL		
Field: OTHER	Lease: ZOIN'S FEDERAL	Well No: 35-137	Well ID: HK7251		
	API No: 43-015-30587	AFE No: UWDCBD2057DRL	Date: 21-Jun-2003	Page: 1 Of 2	

T16S R01E SEC-35

RECEIVED
JUN 24 2003
DIV. OF OIL, GAS & MINING

Drilling Activity Report

Measured Depth: 4,263'	TVD: 4,263'	PBTD:	Proposed MD: 4,290'	Proposed TVD: 4,290'	
DCL: 13	DFS: 8	Spud Date: 04-Jun-2003	Daily Footage:	Daily Rot Hrs:	Total Rot Hrs: 51.5
Torq:	Drag:	Rot Wgt:	P/U Wgt:	Slack Off Wgt:	Wind: / Seas: / Bar: / POB:
Last Casing Size: 5.500"	Set At: 4,262' MD 4,262' TVD	Shoe Test: EMW	Leakoff?		
Cum Rot Hrs On Casing: 0.0	Cum Rot Hrs On Casing Since Last Caliper:	Depth Worst Wear:	% Remaining:		
Liner Size:	Set At: MD TVD	Liner Top At: MD TVD			

Mud Co:	Type:	Sample From:	Wt:	FV:	PV:	YP:	Gel: /		
WL API: HTHP:	FC (1/32) API: HTHP:	Solids:	% Oil:	%Water:	% Sand:	MBT:	Ph:		
Pm:	Pf/Mf: /	Carb:	Cl:	Ca:	Bent:	Solids %HG/LG: /	MDS/Bent: /		

Drlg Gas:	Max Gas:	Conn Gas:	Trip Gas:	Trip Cl:	Remarks:

Bit Number	IADC	Size	Manufacturer	Serial number	Jets (Quantity - Size)	TFA	MD In	MD Out	TVD Out
					- / - / - / - / -				
					- / - / - / - / -				

Type	Feet	Hours	WOB	RPM	Motor RPM	I-Row	O-Row	DC	Loc	B	G	Char	?Pull	Cost/Ft
			/	/										
			/	/										

Total Length of BHA: BHA Description:

Hrs On Jars: Hours Since Last Inspection:

Bit Num	Liner	Stroke	SPM	Press.	GPM	Jet Vel	DP Av	DC Av	Bit HHP	BHHP/SQIN	Pump HHP
	/ /	/ /	/ /								
	/ /	/ /	/ /								

Survey MD	Angle	Azimuth	Direction	TVD	N/S Coordinates	E/W Coordinates	Vertical Section	DLS

Hours	From	Act-Cat	Operations Covering 24 Hours Ending at Midnight — Total Hours Reported: 25.0
		-	UMP PLUG AND SHIFT DV CLOSED. RELEASE PRESS. DV CLOSED. NO RETURNS THROUGHOUT JOB. CMT VOLUME BASED ON 12" HOLE
		-	PLUS 25% EXCESS. 12" HOLE TAKEN FROM CALIPER LOG RUN FROM 1000' TO 600'.
1.00	2230	01 - 13	NIPPLE DOWN AND LIFT BOP.
0.50	2330	01 - 12	SET 11" X 5 1/2" C-82 CASING HANGER W/ 50,000.
		-	
		-	
		-	
		-	
		-	
		-	
		-	
		-	
		-	
		-	
		-	

Safety: TIF, PINCH POINTS, LAYING DOWN PIPE, RUNNING CASING, CEMENTING

24 Hr Summary: LAY DOWN DRILL STRING. RUN AND CMT 5 1/2" PRODUCTION CASING.

Projected Opns: PREPARE TO MOVE TO NEXT LOCATION.

Remarks:

Daily Mud Cost: $	Daily Tangible Cost: $ 57,420	Daily Well Cost: $ 98,499	Incidents: NO INCIDENT REPORTED
Cum Mud Cost: $ 300	Cum Tangible Cost: $ 62,192	Cum Well Cost: $ 365,145	Total Appr: $ 213,738

Drill Water:	Potable Water:	Fuel: 2542	Bulk Weight:	Neat Cement: Blended:
Country: U.S.A.	Rig: NABORS 414	Rig Phone: 713-560-4355	Drilling Rep: J.E. MARSHALL	
Field: OTHER	Lease: ZOIN'S FEDERAL	Well No: 35-137	Well ID: HK7251 - 0	
API No: 43-015-30587	AFE No: UWDCBD2057DRL	Date: 21-Jun-2003	Page: 2 Of 2	

T16S R07E SEC-35

RECEIVED
JUN 24 2003
DIV. OF OIL, GAS & MINING

Drilling Activity Report

Measured Depth: 4,263'	TVD: 4,263'	PBTD:	Proposed MD: 4,290'	Proposed TVD: 4,290'		
DCL: 12	DFS: 7	Spud Date: 04-Jun-2003	Daily Footage: 278'	Daily Rot Hrs: 14.5	Total Rot Hrs: 51.5	
Torq:	Drag: 5	Rot Wgt: 85	P/U Wgt: 90	Slack Off Wgt: 72	Wind:	Seas: / Bar: POB:
Last Casing Size: 8.625"	Set At: 315' MD 315' TVD	Shoe Test: EMW Leakoff?				
Cum Rot Hrs On Casing: 108.5	Cum Rot Hrs On Casing Since Last Caliper:	Depth Worst Wear:	% Remaining:			
Liner Size:	Set At: MD TVD	Liner Top At: MD TVD				

Mud Co:	Type: AIR	Sample From: FLOW	Wt: 8.4	FV:	PV:	YP:	Gel: /		
WL API: HTHP:	FC (1/32) API: HTHP:	Solids:	% Oil:	Water:	% Sand:	MBT:	Ph:		
Pm:	Pf/Mf: /	Carb:	Cl: 600	Ca: 80	Bent:	Solids %HG/LG: /	%DS/Bent: /		

2 5-GAL POLY PLUS

Drlg Gas: 17	Max Gas: 18	Conn Gas: 78	Trip Gas:	Trip Cl:	Remarks: 80% SH, 20% SLTST

Bit Number	IADC	Size	Manufacturer	Serial number	Jets (Quantity - Size)	TFA	MD In	MD Out	TVD Out
2	547Y	7.875	STC	MN2663	3 - 20 / - / - / - / -	1.439	2,874'	4,263'	4,263'
					1 - 26 / - / - / - / -				

Type	Feet	Hours	WOB	RPM	Motor RPM	I-Row	O-Row	DC	Loc	B	G	Char	?Pull	Cost/Ft
F37 CEN JET	1,589	51.5	30 /	90 / 120		4	4	WT	A7	F	3	CI	PR	$ 33.77
			/	/										$

Total Length of BHA: 537.20' BHA Description: BIT, FS, 15 - 6" DC'S, JARS, FLEX JT, 2 - 6" DC'S

Hrs On Jars: 51.5 Hours Since Last Inspection: 108.5

Bit Num	Liner	Stroke	SPM	Press.	GPM	Jet Vel	DP Av	DC Av	Bit HHP	HHP/SQIN	Pump HHP
2	6.50 / /	8.00 / 7.00 /	109/ /	600	365	81.6	214.2		10.6	0.2	127.8
	/ /	/ /	/ /								

Survey MD	Angle	Azimuth	Direction	TVD	N/S Coordinates	E/W Coordinates	Vertical Section	DLS

Hours	From	Act-Cat	Operations Covering 24 Hours Ending at Midnight — Total Hours Reported: 24.0
14.50	0	01 -	DRILL FROM 3985' TO 4263', 278'. AVG ROP: 19.2 FPH. CONNECTIONS GOOD. LAST 14' DRILLING +\-6 FPH
0.50	1430	01 - 06	SURVEY AT 4247'. 6 DEGREES
0.50	1500	01 - 01	CIRCULATE AND CONDITION FOR LOGS.
4.50	1530	01 - 05	STRAP OUT FOR LOGS. NO CORRECTION ON STRAP. NO HOLE PROBLEMS. TRIP GOOD. #2 ENGINE BEING WORKED ON. REQUIRED T
		-	O TRIP IN FIRST GEAR.
4.00	2000	01 - 05	HELD PRE JOB SAFETY MEETING. RU SCHLUMBERGER. RUN PEX FROM LOGGERS TD OF 4234' TO 2955'. RAN GR TO SURFACE CASIN
		-	G. RAN CALIPER FROM 1000' TO 600'. RD SCHLUMBERGER.
		01 - 05	
		01 - 05	MUD LOGGER EST TOP OF FERRON: 4004'
		-	
		-	
		-	
		-	
		-	
		-	

Safety: TIF, HAND SAFETY, TRIPPING PIPE

24 Hr Summary: DRILL FROM 3985' TO 4263'. POOH AND LOG WELL.

Projected Oprn: TIH. LAY DOWN DRILL STRING. RUN AND CEMENT CASING. SET SLIPS, CUT CASING. RD NABORS 414.

Remarks:
SAFETY MTG: 3 TOTAL FOR WELL: 28 DAILY RIG HRS: 132, TOTAL RIG HRS: 1554; DAILY OTHER HRS: 79, TOTAL OTHER HRS: 544

DIESEL USED LAST 24 HRS: 992 GALS

Daily Mud Cost: $ 100	Daily Tangible Cost: $	Daily Well Cost: $ 33,056	Incidents: NO INCIDENT REPORTED
Cum Mud Cost: $ 300	Cum Tangible Cost: $ 4,772	Cum Well Cost: $ 266,646	Total Appr: $ 213,738

Drill Water:	Potable Water:	Fuel: 2914	Bulk Weight:	Neat Cement: Blended:
Country: U.S.A.	Rig: NABORS 414	Rig Phone: 713-560-4355	Drilling Rep: J.E. MARSHALL	
Field: OTHER	Lease: ZOIN'S FEDERAL	Well No: 35-137	Well ID: HK7251 - 0	
API No: 43-015-30587	AFE No: UWDCBD2057DRL	Date: 20-Jun-2003	Page: Of	

T16S R01E SEC-35

RECEIVED
JUN 24 2003
DIV. OF OIL, GAS & MINING

Drilling Activity Report

Measured Depth: 3,985'	TVD: 3,985'	PBTD:	Proposed MD: 4,290'	Proposed TVD: 4,290'		
DCL: 11	DFS: 6	Spud Date: 04-Jun-2003	Daily Footage: 753'	Daily Rot Hrs: 21.5	Total Rot Hrs: 93.0	
Torq:	Drag: 10	Rot Wgt: 80	P/U Wgt: 90	Slack Off Wgt: 72	Wind:	Seas: / Bar: POB:
Last Casing Size: 8.625"	Set At: 299'	MD 299'	TVD	Shoe Test:	EMW	LeakoFF?
Cum Rot Hrs On Casing: 94.0	Cum Rot Hrs On Casing Since Last Caliper:		Depth Worst Wear:	% Remaining:		
Liner Size:	Set At:	MD	TVD	Liner Top At:	MD	TVD
Mud Co:	Type: AIR	Sample From: FLOW	Wt: 8.4	FV:	PV:	YP: Gel: /
WL API: HTHP:	FC (1/32) API: HTHP:	Solids:	% Oil:	%Water:	% Sand:	MBT: Ph:
Pm:	Pf/Mf: /	Carb:	Cl: 600	Ca: 80	Bent:	Solids %HG/LG: / %DS/Bent: /

2 5-GAL POLY PLUS

Drlg Gas: 11	Max Gas: 12	Conn Gas: 35	Trip Gas:	Trip Cl:	Remarks: 100% SH, NO SHOWS

Bit Number	IADC	Size	Manufacturer	Serial number	Jets (Quantity - Size)	TFA	MD In	MD Out	TVD Out
2	547Y	7.875	STC	MN2663	3 - 20 / - / - / - / -	1.439	2,674'		
					1 - 26 / - / - / - / -				

Type	Feet	Hours	WOB	RPM	Motor RPM	I-Row	O-Row	DC	Loc	B	G	Char	?Pull	Cost/Ft
F37 CEN JET	1,311	37.0	30 /	90 / 120										$ 31.72
			/	/										$

Total Length of BHA: 537.20' BHA Description: BIT, FS, 15 - 6" DC'S, JARS, FLEX JT, 2 - 6" DC'S

Hrs On Jars: 37 Hours Since Last Inspection: 94

Bit Num	Liner	Stroke	SPM	Press.	GPM	Jet Vel	DP Av	DC Av	Bit HHP	BHHP/SQIN	Pump HHP
2	6.50 / /	8.00 / 7.00 /	109 / /	600	365	81.6	214.2		10.6	0.2	127.8
	/ /	/ /	/ /								

Survey MD	Angle	Azimuth	Direction	TVD	N/S Coordinates	E/W Coordinates	Vertical Section	DLS

Hours	From	Act-Cat	Operations Covering 24 Hours Ending at Midnight	Total Hours Reported: 24.0
0.50	0	01 -	DRILL FROM 3232' TO 3264'.	
0.50	30	01 - 08	SURVEY AT 3214'. 1 1/4 DEGREES	
12.00	100	01 - 02	DRILL FROM 3264' TO 3761'. 497', AVG ROP: 41.4 FPH. HOLE IN GOOD SHAPE. SOME TIGHT SPOTS ON CONNECTIONS BUT DO N	
		-	OT SEE THEM ONCE BIT HAS PASSED THROUGH. PASSING TOOL JOINT AND REAMING ALL CONNECTIONS.	
0.50	1300	01 - 08	SURVEY AT 3751' 3 1/2 DEGREES.	
2.00	1330	01 - 02	DRILL FROM 3761' TO 3824'. 63', 32 FPH.	
0.50	1530	01 - 21	RIG SERVICE	
1.50	1600	01 - 02	DRILL FROM 3824' TO 3855'. 41', 27.3 FPH.	
1.00	1730	01 - 20		
1.00	1830	01 - 02	DRILL FROM 3855' TO 3888'.	
1.00	1930	01 - 04	WORK TIGHT CONNECTION. TIGHT FROM 3848' TO 3828'.	
3.50	2030	01 - 02	DRILL FROM 3888' TO 3985'. 97', 27.7 FPH. SMALL TIGHT SPOTS ON CONNECTIONS. RUNNING 400 CFM AIR TO MAINTAIN PIT	
		-	LEVEL THROUGHOUT DAY.	
		-		
		-		

Safety: TIF, PINCH POINTS, FIRST DAY AT WORK

24 Hr Summary: DRILL FROM 3232' TO 3985', 753', 100% SHALE

Projected Oprn: TD AT +\-4320'. POOH, LOG, TIH, LD DP, RUN CASING.

Remarks:

SAFETY MTG: 2 TOTAL FOR WELL: 25 DAILY RIG HRS: 132, TOTAL RIG HRS: 1422; DAILY OTHER HRS: 55, TOTAL OTHER HRS: 465

DIESEL USED LAST 24 HRS: 1333 GALS

BLAKE PORTER - MUD LOGGER ON LOCATION

Daily Mud Cost: $ 100	Daily Tangible Cost: $	Daily Well Cost: $ 20,441	Incidents: NO INCIDENT REPORTED
Cum Mud Cost: $ 200	Cum Tangible Cost: $ 4,772	Cum Well Cost: $ 233,590	Total Appr: $ 213,738
Drill Water:	Potable Water:	Fuel: 3906	Bulk Weight: / Neat Cement: / Blended:
Country: U.S.A.	Rig: NABORS 414	Rig Phone: 713-560-4355	Drilling Rep: J.E. MARSHALL
Field: OTHER	Lease: ZOIN'S FEDERAL	Well No: 35-137	Well ID: HK7251
API No: 43-015-30587	AFE No: UWDCBD2057DRL	Date: 19-Jun-2003	Page: Of

T16S R07E SEC-35

RECEIVED

JUN 24 2003

DIV. OF OIL, GAS & MINING

Drilling Activity Report

Measured Depth: 3,232'	TVD: 3,232'	PBTD:	Proposed MD: 4,290'	Proposed TVD: 4,290'		
DCL: 10	DFS: 5	Spud Date: 04-Jun-2003	Daily Footage: 558'	Daily Rot Hrs: 15.5	Total Rot Hrs: 71.5	
Torq:	Drag: 2	Rot Wgt: 67	P/U Wgt: 69	Slack Off Wgt: 65	Wind:	Seas: /	Bar:	POB:
Last Casing Size: 8.625"	Set At: 299'	MD 299'	TVD	Shoe Test:	EMW	Leakoff?		
Cum Rot Hrs On Casing: 72.5	Cum Rot Hrs On Casing Since Last Caliper: 72.5	Depth Worst Wear:	% Remaining:			
Liner Size:	Set At: MD	TVD	Liner Top At: MD	TVD		
Mud Co:	Type: AIR	Sample From: FLOW	Wt: 8.4	FV:	PV:	YP:	Gel: /	
WL API:	HTHP:	FC (1/32) API:	HTHP:	Solids:	% Oil:	%Water:	% Sand:	MBT:	Ph:
Pm:	Pf/Mf: /	Carb:	Cl: 600	Ca: 80	Bent:	Solids %HG/LG: /	%DS/Bent: /	

2 5GALPOLY PLUS

Drlg Gas: 8	Max Gas: 12	Conn Gas: 25	Trip Gas:	Trip Cl:	Remarks: 100% SH, NO SHOWS

Bit Number	IADC	Size	Manufacturer	Serial number	Jets (Quantity - Size)	TFA	MD In	MD Out	TVD Out
2	547Y	7.875	STC	MN2663	3 - 20 / - / - / - / -	1.439	2,674'		
					1 - 26 / - / - / - / -				

Type	Feet	Hours	WOB	RPM	Motor RPM	I-Row	O-Row	DC	Loc	B	G	Char	?Pull	Cost/Ft
F37 CEN JET	558	15.5	30 /	120 /										$ 42.41
			/	/										$

Total Length of BHA: 537.20' BHA Description: BIT, FS, 15 - 6" DC'S, JARS, FLEX JT, 2 - 6" DC'S

Hrs On Jars: 15.5 Hours Since Last Inspection: 71.5

Bit Num	Liner	Stroke	SPM	Press.	GPM	Jet Vel	DP Av	DC Av	Bit HHP	BHHP/SQIN	Pump HHP
2	6.50 / /	8.00 / 7.00 /	109 / /	450	365	81.6	214.2		10.6	0.2	95.8
	/ /	/ /	/ /								

Survey MD	Angle	Azimuth	Direction	TVD	N/S Coordinates	E/W Coordinates	Vertical Section	DLS

Hours	From	Act-Cat	Operations Covering 24 Hours Ending at Midnight — Total Hours Reported: 24.0
2.00	0	01 -	FINISH OUT OF HOLE. PULLING WET STRING. FOUND NO FLOAT IN DRILL STRING AND BIT PLUGGED. CLEAN OUT BIT. NOTE: D
		-	RILLERS ONE JOINT OFF ON TALLY. SLM OUT OF HOLE. CORRECTED DEPTH: 2640'.
3.50	200	01 - 05	TIH. PICK UP 2 DC'S FOR WIEGHT UNDER JARS. NO HOLE PROBLEMS ON TRIP OUT OR IN HOLE.
2.00	530	01 - 04	PICK UP KELLY. BREAK CIRC AND WASH AND REAM 130' TO BOTTOM. DID NOT SEE ANY BRIDGES, TIGHT SPOTS OR FILL.
5.50	730	01 - 02	DRILL FROM 2640' TO 2764', 124', 22.5 FPH, 30 M WOB, 120 RPM. ADDING VIS CUP OF POLY PLUS (PHPA) TO EACH CONNECTIO
		-	N. FIRST CONNECTION TIGHT. WORKED UP THROUGH TIGHT AREAS. CONNECTIONS GRADUALLY GETTING BETTER THROUGHOUT DAY.
0.50	1300	01 - 06	SURVEY AT 2714', 1 1/2 DEGREES
0.50	1330	01 - 02	DRILL FROM 2764' TO 2794'.
0.50	1400	01 - 21	RIG SERVICE
9.50	1430	01 - 02	DRILL FROM 2794' TO 3232', 438', AVG ROP: 46.1 FPH. PASSING TOOL JOINT AND SINGLE REAMING EACH CONNECTION. ADDING
		-	VIS CUP OF PHPA TO DRILL PIPE ON EACH CONNECTION. CONNECTIONS GOOD. NO APPARENT HOLE PROBLEMS.
		-	
		-	
		-	
		-	

Safety: TIF, PINCH POINTS, LAST DAY AT WORK

24 Hr Summary: POOH FOR PLUGGED BIT. TIH. DRILL FROM 2640' TO 3232'.

Projected Oprn: DRILL AHEAD

Remarks:
SAFETY MTG: 2 TOTAL FOR WELL: 23 DAILY RIG HRS: 132, TOTAL RIG HRS: 1290; DAILY OTHER HRS: 48, TOTAL OTHER HRS: 410

DIESEL USED LAST 24 HRS: 1118 GALS

BLAKE PORTER - MUD LOGGER ON LOCATION

Daily Mud Cost: $ 100	Daily Tangible Cost: $	Daily Well Cost: $ 15,206	Incidents: NO INCIDENT REPORTED
Cum Mud Cost: $ 100	Cum Tangible Cost: $ 4,772	Cum Well Cost: $ 213,149	Total Appr: $ 213,738

Drill Water:	Potable Water:	Fuel: 2852	Bulk Weight:	Neat Cement:	Blended:
Country: U.S.A.	Rig: NABORS 414	Rig Phone: 713-580-4355	Drilling Rep: J.E. MARSHALL		
Field: ORANGEVILLE	Lease: ZOIN'S FEDERAL	Well No: 35-137	Well ID: HK7251 - 0		
API No: 43-015-30587	AFE No: UWDCBD2057DRL	Date: 18-Jun-2003	Page: Of		

T16S R02E SEC-35

RECEIVED
JUN 24 2003
DIV. OF OIL, GAS & MINING

Drilling Activity Report

Measured Depth: 2,674'	TVD: 2,674'	PBTD:			Proposed MD: 4,290'		Proposed TVD: 4,290'	
DOL: 9	DFS: 4	Spud Date: 04-Jun-2003	Daily Footage: '		Daily Rot Hrs: 0.0		Total Rot Hrs: 56.0	
Torq:	Drag: 2	Rot Wgt: 62	P/U Wgt: 64	Slack Off Wgt: 60	Wind:	Seas: /	Bar:	POB:
Last Casing Size: 8.625"	Set At: 299'	MD 299'	TVD	Shoe Test:	EMW	Leakoff?		
Cum Rot Hrs On Casing: 57.0	Cum Rot Hrs On Casing Since Last Caliper: 57.0			Depth Worst Wear:		% Remaining:		
Liner Size:	Set At:	MD	TVD	Liner Top At:	MD	TVD		
Mud Co:	Type: AIR		Sample From: FLOW	Wt: 8.4	FV:	PV:	YP:	Gel: /
WL API:	HTHP:	FC (1/32) API:	HTHP:	Solids:	% Oil:	%Water:	% Sand:	MBT:	Ph:
Pm:	Pf/Mf: /	Carb:	Cl:	Ca:	Bent:	Solids %HG/LG: /	%DS/Bent: /		

Drlg Gas: | Max Gas: | Conn Gas: | Trip Gas: | Trip Cl: | Remarks:

Bit Number	IADC	Size	Manufacturer	Serial number	Jets (Quantity - Size)	TFA	MD In	MD Out	TVD Out
1	537A	7.875	HTC	KP2618	3 - 20 / 3 - 20 / - / - / -	1.169	299'	2,674'	2,674'
2	547Y	7.875	STC	MN2663	1 - 18 / 1 - 26 / - / - / -	1.439	2,674'		

Type	Feet	Hours	WOB	RPM	Motor RPM	I-Row	O-Row	DC	Loc	B	G	Char	?Pull	Cost/Ft
HP53JAC	2,375	56.0	28 / 30	110 / 120		2	3	WT	A7	E	I	NO	HP	$ 23.80
F37 CEN JET		0.0	/	/										$ 0.00

Total Length of BHA: 478.29' BHA Description: BIT, FS, 13 - 6" DC'S, JARS, FLEX JT, 2 - 6" DC'S

Hrs On Jars: 0 | Hours Since Last Inspection: 56

Bit Num	Liner	Stroke	SPM	Press.	GPM	Jet Vel	DP Av	DC Av	Bit HHP	BHHP/SQIN	Pump HHP
1	6.50 / /	8.00 / 7.00 /	106/ /	440	355	97.7	208.3		14.8	0.3	91.1
2	5.50 / /	/ /	/ /		0	0	0		0	0	0

Survey MD	Angle	Azimuth	Direction	TVD	N/S Coordinates	E/W Coordinates	Vertical Section	DLS

Hours	From	Act-Cat	Operations Covering 24 Hours Ending at Midnight (Total Hours Reported: 24.0)
0.50	0	01 -	DRILL FROM 2245' TO 2270'. CONNECTION TIGHT AT 2270'. WORKED TIGHT HOLE AT 80K OVER TO FREE PIPE. ONE SPIKE W/ P
		-	UMP. REAMED TIGHT HOLE. HOLE OKAY.
0.50	30	01 - 06	SURVEY AT 2230'. 1 3/4 DEG.
3.50	100	01 - 02	DRILL FROM 2270' TO 2424'. 154', AVG ROP: 44 FPH. PUMPING 700 CFM AIR. CONNECTION AT 2301' TIGHT AT TOOL JT. GO
		-	OD WHILE PULLING KELLY. DOUBLE REMAINING CONNECTIONS.
1.50	430	01 - 04	WHILE MAKING CONNECTION, STUCK PIPE AT 2410'. WORK TIGHT HOLE AT 2410'. COULD NOT ROTATE, MOVE UP OR DOWN. HOLE
		-	PACKED OFF. STRING WEIGHT 60K. WORKED PIPE DOWN W/ NO SUCCESS. WORKED PIPE UP TO 80K OVER STRING WEIGHT NUMEROUS
		-	TIMES AND MADE +/-6". BEGAN PUMPING AIR AND WORKING PIPE UP. PIPE CAME FREE. CIRC HOLE CLEAN. WASH AND REAM TI
		-	GHT AREA FROM 2410' - 2390'.
1.00	600	01 - 05	LAY DOWN TWO JTS. PREPARE FOR WIPER TRIP. MADE DECISION TO ADD JARS. TIH TO DRILL UNTIL JARS ARRIVE.
6.50	700	01 - 02	DRILL FROM 2424' TO 2674', 250', AVG ROP: 38.5 FPH. DOUBLE REAMING AND PASSING TOOL JOINTS ON CONNECTIONS. WHILE
		-	MAKING CONNECTIONS PULLING KELLY W/ NO PROBLEM. PASSING TJ TIGHT ON MOST CONNECTIONS.
3.50	1330	01 - 05	HELD SAFETY MEETING ON TRIPPING AND USING PIPE SPINNERS FOR SSE. TOOH. TIGHT FROM 2214' - 2169'. NO PROBLEM ON R
		-	EST OF TRIP.
0.50	1700	01 - 21	RIG SERVICE

Safety: TIF, HAND INJURIES, TRIPPING PIPE, RUNNING PIPE SPINNERS

24 Hr Summary: DRILLED FROM 2245' TO 2674'. TIGHT HOLE. POOH FOR JARS. TIH.

Projected Oprn: PULL STRING. PICK U 2 DC'S AND FLOAT. TIH AND RESUME DRILLING.

Remarks:
SAFETY MTG: 3 TOTAL FOR WELL: 21 DAILY RIG HRS: 132, TOTAL RIG HRS: 1158; DAILY OTHER HRS: 44, TOTAL OTHER HRS: 362

DIESEL USED LAST 24 HRS: XXXX GALS

Daily Mud Cost: $	Daily Tangible Cost: $	Daily Well Cost: $ 25,859	Incidents: NO INCIDENT REPORTED
Cum Mud Cost: $	Cum Tangible Cost: $ 4,772	Cum Well Cost: $ 197,943	Total Appr: $ 213,738

Drill Water:	Potable Water:	Fuel: 3968	Bulk Weight:	Neat Cement: Blended:
Country: U.S.A.	Rig: NABORS 414	Rig Phone: 713-560-4355	Drilling Rep: J.E. MARSHALL	
Field: ORANGEVILLE	Lease: ZOIN'S FEDERAL	Well No: 36-137	Well ID: HK7251 - 0	
API No: 43-015-30687	APE No: UWDCBD2057DRL	Date: 17-Jun-2003	Page: 1 Of 2	

T16S R07E SEC-35

RECEIVED
JUN 24 2003
DIV. OF OIL, GAS & MINING

Drilling Activity Report

Measured Depth: 2,674'	TVD: 2,674'	PBTD:		Proposed MD: 4,290'	Proposed TVD: 4,290'		
DOL: 9	DFS: 4	Spud Date: 04-Jun-2003	Daily Footage: '	Daily Rot Hrs: 0.0	Total Rot Hrs: 56.0		
Torq:	Drag: 2	Rot Wgt: 62	P/U Wgt: 64	Slack Off Wgt: 60	Wind:	Seas: /	Bar: / POB:
Last Casing Size: 8.625"	Set At: 299' MD 299' TVD	Shoe Test: EMW Leakoff?					
Cum Rot Hrs On Casing: 57.0	Cum Rot Hrs On Casing Since Last Caliper: 57.0	Depth Worst Wear:	% Remaining:				
Liner Size:	Set At: MD TVD	Liner Top At: MD TVD					
Mud Co:	Type: AIR	Sample From: FLOW	Wt: 8.4	FV:	PV:	YP:	Gel: /
WL API: HTHP:	FC (1/32) API: HTHP:	Solids:	% Oil:	%Water:	% Sand:	MBT:	Ph:
Pm:	Pf/Mf: /	Carb:	Cl:	Ca:	Bent:	Solids %HG/LG: /	%DS/Bent: /

Drlg Gas:	Max Gas:	Conn Gas:	Trip Gas:	Trip Cl:	Remarks:

Bit Number	IADC	Size	Manufacturer	Serial number	Jets (Quantity - Size)	TFA	MD In	MD Out	TVD Out
					- / - / - / - / -				
					- / - / - / - / -				

Type	Feet	Hours	WOB	RPM	Motor RPM	I-Row	O-Row	DC	Loc	B	G	Char	?Pull	Cost/Ft
			/	/										
			/	/										

Total Length of BHA: 478.29' BHA Description: BIT, FS, 13 - 6" DC'S, JARS, FLEX JT, 2 - 6" DC'S

Hrs On Jars: 0 Hours Since Last Inspection: 56

Bit Num	Liner	Stroke	SPM	Press.	GPM	Jet Vel	DP Av	DC Av	Bit HHP	HHP/SQIN	Pump HHP
	/ /	/ /	/ /								
	/ /	/ /	/ /								

Survey MD	Angle	Azimuth	Direction	TVD	N/S Coordinates	E/W Coordinates	Vertical Section	DLS

Hours	From	Act-Cat	Operations Covering 24 Hours Ending at Midnight — Total Hours Reported: 24.0
4.50	1730	01 - 05	PICK UP BIT #2. TIH W/ 13 DC'S, PICK UP DRILLING JARS W/ 2 COLLARS ABOVE JARS. TIH TO 2541' W/ NO PROBLEM. SET D
		-	OWN AT 2541'.
1.00	2200	01 - 04	KELLY UP TO WASH AND REAM TO BOTTOM. TURNED ON PUMP AND PRESSURE INCREASED TO 3000 PSI. DRILL PIPE PLUGGED. FOUN
		-	D FLOAT ON FLOOR. SUSPECT FLOAT NOT INSTALLED AND BIT PLUGGED WHEN SETTING DOWN AT 2541'.
1.00	2300	01 - 05	TOOH.
		-	
		-	
		-	
		-	
		-	
		-	
		-	
		-	
		-	
		-	

Safety: TIF, HAND INJURIES, TRIPPING PIPE, RUNNING PIPE SPINNERS

24 Hr Summary: DRILLED FROM 2245' TO 2674'. TIGHT HOLE. POOH FOR JARS. TIH.

Projected Opn: PULL STRING. PICK U 2 DC'S AND FLOAT. TIH AND RESUME DRILLING.

Remarks:

Daily Mud Cost: $	Daily Tangible Cost: $	Daily Well Cost: $ 25,859	Incidents: NO INCIDENT REPORTED
Cum Mud Cost: $	Cum Tangible Cost: $ 4,772	Cum Well Cost: $ 197,943	Total Appr: $ 213,738
Drill Water:	Potable Water:	Fuel: 3968	Bulk Weight: / Neat Cement: / Blended:
Country: U.S.A.	Rig: NABORS 414	Rig Phone: 713-560-4355	Drilling Rep: J.E. MARSHALL
Field: ORANGEVILLE	Lease: ZION'S FEDERAL	Well No: 36-137	Well ID: HK7251 -10
API No: 43-015-30587	AFE No: UWDCBD2057DRL	Date: 17-Jun-2003	Page: 2 Of 2

T16S R07E SEC-35

RECEIVED
JUN 24 2003
DIV. OF OIL, GAS & MINING

Drilling Activity Report

Measured Depth: 2,245'	TVD: 2,245'	PBTD:	Proposed MD: 4,290'	Proposed TVD: 4,290'		
DOL: 8	DFS: 3	Spud Date: 04-Jun-2003	Daily Footage: 834'	Daily Rot Hrs: 22.5	Total Rot Hrs: 46.0	
Torq:	Drag: 4	Rot Wgt: 58	P/U Wgt: 62	Slack Off Wgt: 52	Wind:	Seas: / Bar: POB:
Last Casing Size: 8.625"	Set At: 299' MD 299' TVD	Shoe Test: EMW Leakoff?				
Cum Rot Hrs On Casing: 46.5	Cum Rot Hrs On Casing Since Last Caliper: 46.5	Depth Worst Wear:	% Remaining:			
Liner Size:	Set At: MD TVD	Liner Top At: MD TVD				
Mud Co:	Type: AIR	Sample From: FLOW	Wt: 8.4	FV:	PV:	YP: Gel: /
WL API: HTHP:	FC (1/32) API: HTHP:	Solids:	% Oil:	%Water:	% Sand:	MBT: Ph:
Pm:	Pf/Mf: /	Carb:	Cl:	Ca:	Bent:	Solids %HG/LG: / MDS/Bent: /

Drlg Gas:	Max Gas:	Conn Gas:	Trip Gas:	Trip Cl:	Remarks:

Bit Number	IADC	Size	Manufacturer	Serial number	Jets (Quantity - Size)	TFA	MD In	MD Out	TVD Out
1	537A	7.875	HTC	KP2618	3 - 20 / - / - / - / -	1.169	299'	2,674'	2,674'
					1 - 18 / - / - / - / -				

Type	Feet	Hours	WOB	RPM	Motor RPM	I-Row	O-Row	DC	Loc	B	G	Char	?Pull	Cost/Ft
HP53JAC	1,946	46.0	20 / 30	110 / 120		2	3	WT	A7	E	I	NO	HP	$ 24.76
			/	/										$

Total Length of BHA: 476.29' BHA Description: BIT, FS, 16 - 6" DC'S

Hrs On Jars: Hours Since Last Inspection: 46

Bit Num	Liner	Stroke	SPM	Press.	GPM	Jet Vel	DP Av	DC Av	Bit HHP	BHHP/SQIN	Pump HHP
1	6.50 / /	8.00 / 7.00 /	106 / /	400	355	97.7	208.3		14.8	0.3	82.8
	5.50 / /	/ /	/ /								

Survey MD	Angle	Azimuth	Direction	TVD	N/S Coordinates	E/W Coordinates	Vertical Section	DLS

Hours	From	Act-Cat	Operations Covering 24 Hours Ending at Midnight — Total Hours Reported: 24.0
2.00	0	01 -	DRILL FROM 1411' TO 1503'. 92', 46 FPH. 30M WOB, 120 RPM. DOUBLE REAM EACH CONNECTION. NO HOLE PROBLEMS. PUMPI
		-	NG 300 GPM WATER AND 1000 CFM AIR. GAINING +\-100 BPH WATER.
0.50	200	01 - 06	SURVEY @ 1503'. 3 1/2 DEGREES
8.50	230	01 - 02	DRILL FROM 1503' TO 1777'. 274', 32.2 FPH. 20M WOB, 120 RPM. DOUBLE REAM CON. SOME OVERPULL ON CONNECTIONS W/ T
		-	OOL JT 3' ABOVE FLOOR. WEIGHT WOULD INCREASE 20-40K AND RELEASE. NO PROBLEM GOING DOWN.
0.50	1100	01 - 06	SURVEY AT 1737'. 2 1/4 DEGREES.
4.00	1130	01 - 02	DRILL FROM 1777' TO 1961'. 184', 46 FPH. 30M WOB, 120 RPM. DOUBLE REAM CONNECTIONS. BEGAN MOVING PIPE WHILE STA
		-	RTING PUMPS AND AIR. CONNECTIONS BETTER FOR A WHILE THEN STARTED GET SMALL TIGHT SPOTS AGAIN. INCREASE PUMP FROM
		-	90 TO 108 SPM. CONNECTIONS OKAY. PUMPING 380 GPM WATER AND 800 CFM AIR. NO GAINS OR LOSSES OF WATER.
0.50	1530	01 - 21	RIG SERVICE
8.00	1600	01 - 02	DRILL FROM 1961' TO 2245'. 284', 35.5 FPH. 30M WOB, 120 RPM. SOME SLIGHT OVERPULL ON CONNECTIONS. WILL PULL 20
		-	TO 40 OVER AND IMMEDIATELY RELEASE. DOUBLE REAMING ALL CONNECTIONS. NO OVERPULL AFTER REAMING.
		-	
		-	
		-	

Safety: TIF, HAND INJURIES, RUNNING SURVEYS

24 Hr Summary: DRILL AND SURVEY FROM 1411' TO 2245'.

Projected Oprn: DRILL AHEAD SURVEYING EVERY 500'.

Remarks:
SAFETY MTG: 2 TOTAL FOR WELL: 18 DAILY RIG HRS: 132, TOTAL RIG HRS: 1026; DAILY OTHER HRS: 44, TOTAL OTHER HRS: 318
DIESEL USED LAST 24 HRS: 1364 GALS

Daily Mud Cost: $	Daily Tangible Cost: $	Daily Well Cost: $ 18,513	Incidents: NO INCIDENT REPORTED
Cum Mud Cost: $	Cum Tangible Cost: $ 4,772	Cum Well Cost: $ 172,084	Total Appr: $ 213,738
Drill Water:	Potable Water:	Fuel: 1860	Bulk Weight: / Neat Cement: Blended:
Country: U.S.A.	Rig: NABORS 414	Rig Phone: 713-560-4355	Drilling Rep: J.E. MARSHALL
Field: ORANGEVILLE	Lease: ZOIN'S FEDERAL	Well No: 35-137	Well ID: HK7251
	API No: 43-015-30587	AFE No: UWDCBD2057DRL	Date: 16-Jun-2003 Page: of

T16S R07E SEC-35

RECEIVED
JUN 24 2003
DIV. OF OIL, GAS & MINING

43-015-30587

012

ChevronTexaco

Mid-Continent Business Unit
Facsimile Transmittal Sheet

DATE:

TO:

Company: State of Utah

Name: Carol Daniels

Phone:

Fax: 801-359-3940

FROM:

Company: ChevronTexaco

Name: Darla Nelson

Phone: 281-561-3790

Fax: 281-561-3645

No. of pages including cover sheet:

MESSAGE: Weekly morning reports

RECEIVED
JUL 09 2003
DIV. OF OIL, GAS & MINING

ChevronTexaco

Daily Completion/WO Report

Spud Date: 14-JUN-2003	Start Date: 30-JUN-2003	Actual Days: 7	Auth.Days:	MD: 4,263 '	TVD: 4,263 '	PBTD: 4,213 '	
Job Description: INITIAL COMPLETION				KB Correction: 0.000		Orig KB Elev: 16.000	
				Wind:	Seas: /	Bar:	FCB:
Mud Type:		Wt:	FV:	PV:	YP:	WL:	
Prod Casing Size: 5.500 "	Weight: 17.00	Grade: L80	Set @ 4,262 ' MD	4,262 ' TVD		Cst.Top@	
Liner Size:	Weight:	Grade:	Set @ MD	TVD	Top @ MD	TVD	

Tubing Size	Wt.	Grade	Threads	Depth	Details

Packer Set At	Description	Perforations From	To	Details

Fish Top @ Description:

BHA No:	Details:	Bit Data		
		Number	Type	Serial Number

Hours	From	Act-Cat	Operations Covering 24 Hours Ending at Midnight	Total hours Reported: 2.8
0.50	830	99 - 62	SAFETY MEETING: JSA: 4 PTS TIF.	
2.25	900	06 - 29	5 1/2" X 8 5/8" SURFACE CSG PRESSURE: 0 PSI. RIG UP CEMENT EQUIPMENT. TIE INTO 5 1/2"X8 5/8" SURFACE CSG. MIX	
		-	AND PUMP 86 SX CLASS G CEMENT AT 15.6 PPG 1.18 YIELD AT 1/4 TO 1/2 BBL / MINUTE. CAUGHT PRESSURE TO 40 PSI WITH	
		-	86 SX MIXED AND PUMPED. (75 SX VOLUME TO TOP OF CEMENT AT 480') SHUT DOWN, SHUT IN VALVE ON SURFACE CSG. RIG	
		-	DOWN CEMENT EQUIPMENT.	
	1115	06 - 99	FINAL REPORT UNTIL FURTHER ACTIVITY.	
		-		
		-		
		-		
		-		
		-		
		-		
		-		
		-		
		-		
		-		
		-		
		-		
		-		
		-		
		-		

CONFIDENTIAL

RECEIVED
JUL 09 2003
DIV OF OIL, GAS & MINING

Safety: OTHERS HRS: 17

24 Hr Summary:

Projected Oper: PENDING FRAC

Fluid Lost To Formation Daily: Cumulative: Incidents: NO INCIDENT REPORTED

Hours Charged To			Hours Used		Other Charges	H_2S:
Contractor:	ChvTex:	Travel:	Tongs:	Circ. Equip:		

Remarks:

Daily Mud Cost:	Daily Tangible Cost:	Daily Well Cost: $ 3,710		ChvTex %:
Cum Mud Cost:	Cum Tangible Cost:	Cum Well Cost: $ 24,780	Total Appropriated Cost: $ 265,000	

Materials On Hand:

AFE Number: UNDCH02057COM	API Well Number: 43-015-30587-00	Well ID: HK7251	Project ID: 1
Country: U.S.A.	Rig: KEY # 906	Rig Phone: 435-828-6054	Drilling Rep: STEVE KEBERT
Field: FERRON-HUNTINGTON	Lease: ZIONS FEDERAL	Well No: 35-137	Date: 07-JUL-2003
			Page: 1 Of 1

T16S R07E S-35

Daily Completion/WO Report

Spud Date: 04-Jun-2003	Start Date: 30-Jun-2003	Actual Days: 3	Auth.Days:	MD: 4,263 ' TVD: 4,263 ' PBTD: 4,213 '	
Job Description: INITIAL COMPLETION				KB Correction: 0.0	Orig KB Elev: 16.0
				Wind: Seas: /	Bar: PCB:
Mud Type:	Wt:	FV:	PV:	YP:	NL:

Prod Casing Size: 5.500 "	Weight: 17.00	Grade: L80	Set @ 4,262 ' MD 4,262 ' TVD		Cmt.Tops
Liner Size:	Weight:	Grade:	Set @ MD TVD	Top @ MD TVD	

Tubing Size	Wt.	Grade	Threads	Depth	Details

Packer Set At	Description	Perforations From	To	Details

Fish Top @ Description:

BHA No:	Details:	Bit Data		
		Number	Type	Serial Number

Total hours Reported: 10.0

Hours	From	Act-Cat	Operations Covering 24 Hours Ending at Midnight
0.50	700	06 .	SAFETY MEETING: 4 PTS TIF. JSA: L/D TBG.
0.41	730	06 . 16	SICP: 0 PSI. TEST CSG TO 4600 PSI / 15 MINUTES GOOD. NO LEAK-OFF.
1.58	755	06 . 54	TIH W/ TBG TO 4213' PBTD. CIRCULATE HOLE W/ 2% KCL WATER.
4.50	930	06 . 52	L/D TBG AND DRLG COLLARS.
2.00	1400	06 . 13	N/D BOPE, N/U WELL-HEAD. LOAD OUT POWER SWIVEL, AND HANDLING EQUIP.
1.00	1600	06 . 39	RIG DOWN, MOVE OFF LOCATION. SECURE WELL.
0.00	1700	06 . 99	FINAL REPORT UNTIL FURTHER ACTIVITY.

RECEIVED
JUL 09 2003
DIV OF OIL, GAS & MINING

Safety: RIG HRS: 40 OTHERS HRS: 24

24 Hr Summary:

Projected Oper: WILL CEMENT 5 1/2"X8 5/8" SURFACE MONDAY 7/7/03

Fluid Lost To Formation Daily: Cumulative: Incidents: NO INCIDENT REPORTED

Hours Charged To			Hours Used		Other Charges	H_2S:
Contractor:	Chevron:	Travel:	Tongs:	Circ. Equip:		

Remarks:

Daily Mud Cost: $	Daily Tangible Cost: $	Daily Well Cost: $ 7,451		Chevron %:
Cum Mud Cost: $	Cum Tangible Cost: $	Cum Well Cost: $ 21,070	Total Appropriated Cost: $ 265,000	

Materials On Hand:

APR Number: UWDCB02057COM	API Well Number:	Well ID: HK7251	Project ID: 1
Country: U.S.A.	Rig: KEY # 906	Rig Phone: 435-828-6054	Drilling Rep: STEVE KEBERT
Field: OTHER	Lease: ZOIN'S FEDERAL	Well No: 35-137	Date: 03-Jul-2003
			Page: Of

Daily Completion/WO Report

Spud Date: 04-Jun-2003	Start Date: 30-Jun-2003	Actual Days: 2	Auth.Days:	MD: 4,263 ' TVD: 4,263 '	PBTD: 4,213 '
Job Description: INITIAL COMPLETION				KB Correction: 0.0	Drlg KB Elev: 16.0
				Wind: Seas: /	Bar: FOB:
Mud Type:	Wt:	FV:		PV: YP:	WL:
Prod Casing Size: 5.500 ''	Weight: 17.00	Grade: L80	Set @ 4,262 ' MD 4,262 ' TVD		Cat.Tops
Liner Size:	Weight:	Grade:	Set @ MD TVD	Top @ MD TVD	

Tubing Size	Wt.	Grade	Threads	Depth	Details

Packer Set At	Description	Perforations From	To	Details

Fish Top @ Description:

BHA No:	Details:	Bit Data		
		Number	Type	Serial Number

Total hours Reported: 8.0

Hours	From	Act-Cat	Operations Covering 24 Hours Ending at Midnight
0.50	700	99 -	SAFETY MEETING: 4 PTS TIF. JSA: PICKING UP TBG.
0.33	730	06 - 54	CONTINUE IN HOLE PICKING UP 2 7/8" TBG TO 2160'. TEST CSG TO 2000 PSI / 15 MINUTES GOOD. NO LEAK-OF
1.66	1050	06 - 52	TOOH W/ TBG, DRLG COLLARS, LAY DOWN 4 3/4" MILL.
2.50	1230	06 - 25	R.U. SCHLUMBERGER, RUN A CBL,CCL,G/R LOG FROM 4213' CORRECTED PBTD TO 270' (SURFACE CSG SET AT 311
0.00	1500	06 - 99	SECURE WELL.
		-	
		-	
		-	
		-	
		-	
		-	
		-	
		-	
		-	
		-	
		-	
		-	
		-	
		-	
		-	
		-	
		-	

RECEIVED
JUL 09 2003
DIV. OF OIL, GAS & MINING

Safety: RIG HRS: 32 OTHERS HRS: 23

24 Hr Summary:

Projected Oper: RIH W/ WORK-STRING AND COLLARS, POOH L/D SAME.

Fluid Lost To Formation Daily: Cumulative: Incidents: NO INCIDENT REPORTED

Hours Charged To			Hours Used		Other Charges	H_2S:
Contractor:	Chevron:	Travel:	Tongs:	Circ. Equip:		

Remarks:

Daily Mud Cost: $	Daily Tangible Cost: $	Daily Well Cost: $ 4,350		Chevron %:
Cum Mud Cost: $	Cum Tangible Cost: $	Cum Well Cost: $ 13,619	Total Appropriated Cost: $ 265,000	

Materials On Hand:

AFE Number: UMDCED2057CON	API Well Number:	Well ID: HK7251	Project ID: 1
Country: U.S.A.	Rig: KEY # 906	Rig Phone: 435-828-6054	Drilling Rep: STEVE KEBERT
Field: OTHER	Lease: ZOIN'S FEDERAL	Well No: 35-137	Date: 02-Jul-2003
			Page: Of

ChevronTexaco

Daily Completion/WO Report

Spud Date: 14-JUN-2003	Start Date: 30-JUN-2003	Actual Days: 1	Auth.Days:	MD: 4,263 ' TVD: 4,263 ' PBTD: 4,220 '	
Job Description: INITIAL COMPLETION				KB Correction: 0.000	Orig KB Elev: 16.000
				Wind: Seas: /	Bar: FCB:
Mud Type:	Wt:	FV:		PV: YP:	WL:
Prod Casing Size: 5.500 "	Weight: 17.00	Grade: L80	Set @ 4,262 ' MD 4,262 ' TVD		Cmt.Top@
Liner Size:	Weight:	Grade:	Set @ MD TVD	Top @ MD TVD	

Tubing Size	Wt.	Grade	Threads	Depth	Details

Packer Set At	Description	Perforations From	To	Details

Fish Top @ Description:

BHA No:	Details:	Bit Data		
		Number	Type	Serial Number

Hours	From	Act-Cat	Operations Covering 24 Hours Ending at Midnight	Total hours Reported: 7.0
0.25	1100	06 - 62	SAFETY MEETING: JSA: 4 PTS TIP, PICKING UP DRLG COLLARS.	
1.25	1115	06 - 39	MOVE IN AND RIG UP.	
1.00	1230	06 - 34	N/U 7 1/16" SM BOPE. TEST 250 PSI LOW / 4000 HIGH GOOD.	
4.50	1330	06 - 56	PICK-UP AND RUN W/ 4 3/4" 3 BLADED MILL, BS, 6 - 3 1/8" DRLG COLLARS, 2 7/8" 6.5# J55 8RD EUE TBG TO 635' AND	
		-	TAG UP. R.U. SWIVEL, DRLG CEMENT AND RUBBER PLUG TO STAGE COLLAR AT 646'. SET WT. ON STAGE COLLAR (SOLID)	
		-	DRLG OUT STAGE COLLAR. ROTATE AND WORK MILL THRU STAGE COLLAR, NO TORQUE OR DRAG. R.D. POWER SWIVEL, CONTINUE	
		-	IN HOLE P/U TBG TO 1200'. SECURE WELL.	
		-		
		-		
		-		
		-		
		-		
		-		
		-		
		-		
		-		
		-		
		-		
		-		
		-		
		-		

RECEIVED
JUL 09 2003
DIV. OF OIL, GAS & MINING

Safety: REG HRS: 21 OTHER HRS: 17

24 Hr Summary:

Projected Oper:

Fluid Lost To Formation Daily: Cumulative: Incidents: NO INCIDENT REPORTED

Hours Charged To			Hours Used		Other Charges	H_2S:
Contractor:	ChvTex:	Travel:	Tongs:	Circ. Equip:		

Remarks:
2M: CONTINUE IN HOLE TO 2000' TEST STAGE COLLAR AND CSG TO 2000 PSI.

Daily Mud Cost:	Daily Tangible Cost:	Daily Well Cost: $ 9,269		ChvTex %:
Cum Mud Cost:	Cum Tangible Cost:	Cum Well Cost: $ 9,269	Total Appropriated Cost: $ 265,000	

Materials On Hand:

AFE Number: UNOCEX2057COM	API Well Number: 43-015-30587-00	Well ID: HK7251	Project ID: 1
Country: U.S.A.	Rig: KEY # 906	Rig Phone: 435-828-6054	Drilling Rep: STEVE NEBERT
Field: FERRON-HUNTINGTON	Lease: ZIONS FEDERAL	Well No: 35-137	Date: 01-JUL-2003
			Page: 1 Of 1

43.015.30587

013

ChevronTexaco

Mid-Continent Business Unit
Facsimile Transmittal Sheet

DATE:

TO:

Company: State of Utah

Name: Carol Daniels

Phone:

Fax: 801-359-3940

FROM:

Company: ChevronTexaco

Name: Darla Nelson

Phone: 281-561-3790

Fax: 281-561-3645

No. of pages including cover sheet:

MESSAGE: Weekly morning reports

RECEIVED
JUL 14 2003
DIV. OF OIL, GAS & MINING

Daily Completion/WO Report

Spud Date: 04-Jun-2003	Start Date: 30-Jun-2003	Actual Days: 5	Auth.Days:	MD: 4,263 '	TVD: 4,263 '	PBTD: 4,205 '
Job Description: INITIAL COMPLETION				KB Correction: 0.0	Orig KB Elev: 16.0	
				Wind:	Seas: /	Bar: / FOB:
Mud Type:		Wt:	FV:	PV:	YP:	WL:
Prod Casing Size: 5.500 "	Weight: 17.00	Grade: L80	Set @ 4,262 ' MD 4,262 ' TVD			Cmt.Top@
Liner Size:	Weight:	Grade:	Set @ MD TVD	Top @ MD TVD		

Tubing Size	Wt.	Grade	Threads	Depth	Details

Packer Set At	Description	Perforations From	To	Details

Fish Top @ Description:

BHA No:	Details:	Bit Data		
		Number	Type	Serial Number

Hours	From	Act-Cat	Operations Covering 24 Hours Ending at Midnight	Total hours Reported: 2.5
0.50	1300	99	SAFETY MEETING: 4 PTS TIF. CONCERNING TRIP HAZARDS.	
2.00	1330	06	34 R.U. SCHLUMBERGER. RIH SET TOP OF 10K DIFF. CIBP AT 4205'. R.D. SCHLUMBERGER. SECURE WELL. FINAL RE	

Safety: OTHERS NRS: 8

24 Hr Summary:

Projected Oper: PENDING FRAC.

Fluid Lost To Formation Daily: Cumulative: Incidents: NO INCIDENT REPORTED

Hours Charged To			Hours Used		Other Charges	H_2S:
Contractor:	Chevron:	Travel:	Tongs:	Circ. Equip:		

Remarks:

Daily Mud Cost: $	Daily Tangible Cost: $	Daily Well Cost: $ 2,650		Chevron %:
Cum Mud Cost: $	Cum Tangible Cost: $	Cum Well Cost: $ 27,430	Total Appropriated Cost: $ 265,000	

Materials On Hand:

AFE Number: UWDCBD2057COM	API Well Number: -015- 43-047-30589		Well ID: HK7251	Project ID: 1
Country: U.S.A.	Rig: KEY # 906	Rig Phone: 435-828-6054	Drilling Rep: STEVE KEBERT	
Field: OTHER	Lease: ZOLIN'S FEDERAL	Well No: 3S-137	Date: 11-Jul-2003	
210.25			Page: Of	

T16S R07E S-35

RECEIVED
JUL 14 2003
DIV. OF OIL, GAS & MINING

RECEIVED
JUL 14 2003
DIV. OF OIL, GAS & MINING

RECEIVED
JUL 14 2003
DIV. OF OIL, GAS & MINING

43-015-30587

014

ChevronTexaco

Mid-Continent Business Unit
Facsimile Transmittal Sheet

DATE:

TO:

Company: State of Utah

Name: Carol Daniels

Phone:

Fax: 801-359-3940

FROM:

Company: ChevronTexaco

Name: Darla Nelson

Phone: 281-561-3790

Fax: 281-561-3645

No. of pages including cover sheet:

MESSAGE: Weekly morning reports

RECEIVED

AUG 18 2003

DIV OF OIL, GAS & MINING

ChevronTexaco

Daily Completion/WO Report

Spud Date: 04-Jun-2003	Start Date: 30-Jun-2003	Actual Days: 46	Auth. Days:	MD: 4,283'	TVD: 4,283'	PBTD: 4,205'
Job Description: INITIAL COMPLETION				KB Correction: 0.0	Orig KB Elev: 16.0	
				Wind:	Seas: /	Bar: / POB:
Mud Type:		Wt:	FV:	PV:	YP:	WL:
Prod Casing Size: 5.500"	Weight: 17.00	Grade: L80	Set @ 4,282' MD 4,282' TVD			Cmt. Top@
Liner Size:	Weight:	Grade:	Set @ MD TVD	Top @ MD TVD		

Tubing Size	Wt.	Grade	Threads	Depth	Details

Packer Set At	Description	Perforations From	To	Details

Fish Top @ Description:

BHA No:	Details:	Bit Data		
		Number	Type	Serial Number

Total hours Reported: 11.5

Hours	From	Act-Cat	Operations Covering 24 Hours Ending at Midnight
0.25	700	00 - 02	SAFETY MEETING: 4 PTS TIF. JSA: INDIVIDUAL RESPONSIBILITIES. GOOD COMMUNICATION. / SICP: 45 PSI.
0.25	715	00 - 00	MAKE UP PACKER, JETTING TOOL. PULL INTO LUBRICATOR. TEST LUBRICATOR TO 5000 PSI GOOD. ATTEMPT TO RUN IN HOLE. TOOL
		-	SETTING AND NOT RELEASING. ATTEMPT TO PULL BHA INTO LUBRICATOR, PACKER HUNG IN FRAC CROSS. STRIP OFF FRAC HEAD, AND
		-	FRAC CROSS, RECOVER BHA. FOUND PACKER ELEMENT ROLLED.
5.00	1330	08 - 30	DECISION MADE TO SUSPEND OPERATIONS. RIG DOWN HALCO FRAC EQUIP. RIG DOWN HALCO MAST COILED TBG UNIT.
	1830	08 - 00	SECURE WELL.
		-	
		-	
		-	
		-	
		-	
		-	
		-	
		-	
		-	
		-	
		-	
		-	
		-	
		-	
		-	

RECEIVED

AUG 1 8 2003

DIV. OF OIL, GAS & MINING

Safety: OTHERS HRS: 391

24 Hr Summary:

Projected Oper: MOVE IN COBRA-JET OPERATIONS MONDAY AUG. 25TH AND RIG UP. FRAC TUES. AUG. 26TH

Fluid Lost To Formation Daily: Cumulative: Incidents: NO INCIDENT REPORTED

Hours Charged To			Hours Used		Other Charges	H_2S:
Contractor:	Chevron:	Travel:	Tongs:	Circ. Equip:		

Remarks:

Daily Mud Cost: $	Daily Tangible Cost: $ 0	Daily Well Cost: $ 530		Chevron %:
Cum Mud Cost: $	Cum Tangible Cost: $ 0	Cum Well Cost: $ 39,238	Total Appropriated Cost: $ 285,000	

Materials On Hand:

AFE Number: UWDCSD2057COM	API Well Number: 43-015-30587	Well ID: HK7251	Project ID: 1
Country: U.S.A.	Rig:	Rig Phone: 435-828-8054	Drilling Rep: STEVE KEBERT
Field: OTHER	Lease: ZOIN'S FEDERAL	Well No: 35-137	Date: 17-Aug-2003
			Page 1 of 1

T16S R07E SEC 35

43-015-30587

ChevronTexaco

Daily Completion/WO Report

Spud Date:04-Jun-2003	Start Date:30-Jun-2003	Actual Days: 47	Auth.Days:	MD: 4,283'	TVD: 4,283' PBTD: 4,205'
Job Description: INITIAL COMPLETION				KB Correction: 0.0	Orig KB Elev: 16.0
				Wind: Seas: /	Bar: POB:
Mud Type:		Wt:	FV:	PV: YP:	WL:
Prod Casing Size: 5.500"	Weight: 17.00	Grade: L80	Set @ 4,282' MD 4,282' TVD		Cmt.Top@
Liner Size:	Weight:	Grade:	Set @ MD TVD	Top @ MD TVD	

Tubing Size	Wt.	Grade	Threads	Depth	Details

Packer Set At	Description	Perforations From	To	Details

Fish Top @ Description:

BHA No:	Details:	Bit Data		
		Number	Type	Serial Number

Hours	From	Act-Cat	Operations Covering 24 Hours Ending at Midnight	Total hours Reported: 11.0
0.50	600	08 - 02	SAFETY MEETING: 4 PTS TIF, JSA: TRIP HAZARDS, GOOD COMMUNICATION. / SIWP: 0 PSI.	
4.25	630	08 - 35	CHANGE OUT PACKER AND JET SUB, PULL INTO LUBRICATOR. TEST LUBRICATOR AND PACK-OFF TO 5,000 PSI GOOD. RIH ON 1.75"	
		-	COILED TBG TO 1007 SET AND TEST PACKER GOOD. CYCLE AND RELEASE PACKER RIH AND ATTEMPT TO SET AT 4093'. NO SET. ATTEMPT	
		-	TO SET NUMEROUS TIMES UNSUCCESSFUL. POOH W/ BHA.	
2.00	1045	08 - 48	CHANGE OUT PACKER. TEST LUB. AND ANNULUS TO 5000 PSI GOOD. RIH W/ BHA CORRELATE AND SET PACKER.	
1.75	1245	08 - 48	ZONE #4 JET PERFS 4082-4086 2JSPF, 180 DEG. PHASING. REVERSE JUNK TO PERFS. SPOT 160 GALS 15% HCL TO PERFS. B/D PERFS:	
		-	1140 PSI. AVG RATE: 15 BPM, AVG PSI: 1850 PSI. TOTAL SAND PUMPED: 60,100 LBS. TOTAL FLUID PUMPED: 632 BBLS. (PUMPED AS	
		-	DESIGNED).	
0.10	1430	08 - 35	MOVE PACKER TO NEXT SETTING. PACKER WOULD NOT SET. ATTEMPT NUMEROUS TIMES UNSUCCESSFUL.	
2.33	1445	08 - 35	POOH W/ 1.75" COILED TBG. INSPECT BHA. ASSEMBLY GOOD.	
	1700	08 - 99	SECURE WELL.	
		-		
		-		
		-		
		-		
		-		
		-		
		-		
		-		
		-		
		-		
		-		

RECEIVED
AUG 18 2003
DIV. OF OIL, GAS & MINING

Safety: OTHER/8 HRS: 386

24 Hr Summary:

Projected Oper: MODIFY PACKER, CONTINUE JETTING / FRACTURING.

Fluid Lost To Formation Daily: Cumulative: Incidents: NO INCIDENT REPORTED

Hours Charged To			Hours Used		Other Charges	H_2S:
Contractor:	Chevron:	Travel:	Tongs:	Circ. Equip:		

Remarks:

Daily Mud Cost: $	Daily Tangible Cost: $ 0	Daily Well Cost: $ 530		Chevron %:
Cum Mud Cost: $	Cum Tangible Cost: $ 0	Cum Well Cost: $ 38,708	Total Appropriated Cost: $ 265,000	
Materials On Hand:				

AFE Number: UWDCB02657COM	API Well Number: 43-015-30587	Well ID: HX7261	Project ID: 1
Country: U.S.A.	Rig:	Rig Phone: 435-828-6054	Drilling Rep: STEVE KEBERT
Field: OTHER	Lease: ZOHN'S FEDERAL	Well No: 35-137	Date: 18-Aug-2003
			Page 1 of 1

T16S R07E SEC-35
43-015-30587

ChevronTexaco — **Daily Completion/WO Report**

Spud Date: 04-Jun-2003	Start Date: 30-Jun-2003	Actual Days: 46	Auth. Days:	MD: 4,283'	TVD: 4,283' PBTD: 4,205'
Job Description: INITIAL COMPLETION				KB Correction: 0.0	Orig KB Elev: 18.0
				Wind:	Seas: / Bar: FCB:
Mud Type:		Wt:	FV:	PV:	YP: ML:

Prod Casing Size: 5.500"	Weight: 17.00	Grade: L80	Set @ 4,282' MD 4,282' TVD		Cmt. Top @
Liner Size:	Weight:	Grade:	Set @ MD TVD	Top @ MD TVD	

Tubing Size	Wt.	Grade	Threads	Depth	Details

Packer Set At	Description	Perforations From	To	Details

Fish Top @ Description:

BHA No:	Details:	Bit Data		
		Number	Type	Serial Number

Hours	From	Hot-Cat	Operations Covering 24 Hours Ending at Midnight:	Total hours Reported: 14.5
0.50	600	99 - 30	SAFETY MEETING: 4 PTS TIF. JSA: GOOD COMMUNICATION.	
2.00	600	99 - 30	TEST LINES AND LUBRICATOR TO 5000 PSI GOOD. RIH TAG AND CORRELATE ON CIBP AT 4205'. PAINT AND MARK PERF INTERVALS.	
2.00	800	99 - 46	ZONE #2 JET PERFS 4126-4131 2.8/PF REVERSE X-LINK TO PERFS. ATTEMPT TO BID UNSUCCESSFUL, PRESSURE UP TO 5000 PSI. SPOT	
		-	200 GALS 15% HCL PERFS BID AT 2200 PSI. SAND FRAC AT AVG. RATE: 15 BPM, AVG. PSI: 1800 PSI, TOTAL SAND: 26,100 LBS.	
		-	TOTAL FLUID 385 BBLS. (ZONE PUMPED AS DESIGNED.)	
1.00	1030	09 - 09	ATTEMPT TO SET PKR ON NEXT SETTING UNSUCCESSFUL. CIRC. WELL W/ 2% KCL H20, ONCE AGAIN ATTEMPT TO SET PKR, UNSUCCESSFUL.	
4.00	1300	99 - 30	POOH W/ COILED TBG, CHANGE OUT PACKER WITH THE (SAME TYPE PACKER, WITH MODIFICATIONS). TEST LUBRICATOR 5,000 PSI GOOD.	
		-	RIH CORRELATE TO PERFS.	
1.25	1600	99 - 46	ZONE#3 JET PERFS: 4107-4110 2.8/PF, REVERSE X-LINK GEL TO PERFS. WOULD NOT BRK AT 5000 PSI. SPOT 100 GALS 15% HCL. BID	
		-	PERFS AT 2434 PSI. AVG RATE: 13 BPM, AVG PSI: 2500 PSI, TOTAL SAND PUMPED: 16,000 LBS, 282 BBLS PUMPED. (DESIGNED FOR	
		-	25,000 LBS.	
3.25	1715	99 - 46	ZONE #4 JET PERFS 4087-4090. ATTEMPT TO SET PKR AND CUT ADDITIONAL PERFS, PACKER NOT SETTING. CIRC. WELL CLEAN FROM	
		-	4104' W/ 2% KCL H20. ATTEMPT TO SET PKR NUMEROUS TIMES UNSUCCESFUL. POOH W/ COILED TBG AND BHA INTO LUBRICATOR.	
	2030	99 - 99	SECURE WELL.	
		-		
		-		
		-		
		-		
		-		
		-		
		-		
		-		

RECEIVED

AUG 18 2003

DIV. OF OIL, GAS & MINING

Safety: OTHERS HRS: 530

24 Hr Summary:

Projected Oper: CHANGE OUT PACKER AND JET SUB. CONTINUE JETTING AND FRACTURING.

Fluid Lost To Formation Daily: Cumulative: Incidents: NO INCIDENT REPORTED

Hours Charged To			Hours Used		Other Charges	H2S:
Contractor:	Chevron:	Travel:	Tongs:	Circ. Equip:		

Remarks:
THE PACKERS, WERE BROKEN DOWN BETWEEN RUNS AND INSPECTED. SEALS, O-RINGS, MANDREL, J-SLOT, ELEMENTS
ALL LOOKED GOOD. NO OBVIOUS REASON THEY WILL NOT SET NUMEROUS TIMES.

Daily Mud Cost: $	Daily Tangible Cost: $ 0	Daily Well Cost: $ 530		Chevron %:
Cum Mud Cost: $	Cum Tangible Cost: $ 0	Cum Well Cost: $ 38,170	Total Appropriated Cost: $ 285,000	

Materials On Hand:

AFE Number: UWDC030087COM		API Well Number: 43-015-30587	Well ID: HK7251	Project ID: 1
Country: U.S.A.	Rig:	Rig Phone: 435-828-0684	Drilling Rep: STEVE KEBERT	
Field: OTHER	Lease: ZONS FEDERAL	Well No: 35-137		Date: 15-Aug-2003
				Page 1 of 1

T16S R07E SEC-35

43-015-30587

ChevronTexaco

Daily Comple[illegible]/WO Report

Spud Date:04-Jun-2003	Start Date:30-Jun-2003	Actual Days: 15	Auth.Days:	MD: 4,383'	TVD: 4,383' PBTD: 4,205'
Job Description: INITIAL COMPLETION				KB Correction: 0.0	Orig KB Elev: 16.0
				Wind:	Seas: / Bar: TCB:
Mud Type:		Wt:	FV:	PV:	YP: ML:
Prod Casing Size: 5.500"	Weight: 17.00	Grade: L80	Set @ 4,382' MD 4,382' TVD		Cmt. Top@
Liner Size:	Weight:	Grade:	Set @ MD TVD	Top @ MD TVD	

Tubing Size	Wt.	Grade	Threads	Depth	Details

Packer Set At	Description	Perforations From	To	Details

Fish Top @ Description:

BHA No:	Details:	Bit Data		
		Number	Type	Serial Number

Hours	From	Act.-Cat.	Operations Covering 24 Hours Ending at Midnight (Total hours Reported: 7.5)
3.00	1100	00 - 00	THE MAST COILED TBG TECHNICIAN ARRIVED AND FOUND SEVERAL RELAYS BAD TO THE CT PACK-OFF SYSTEM BELOW INJECTOR HEAD.
		-	ADJUST CHAINS ON INJECTOR HEAD. ADJUSTED COMPUTERIZED CONTROLLED HYDRAULIC SYSTEMS.
0.25	1400	00 - 02	SAFETY MEETING: 4 PTS TIF. JSA: GOOD COMMUNICATION. / SICP: 0 PSI / PERFS OPEN TO WELL-BORE: 4142 - 4145
		-	2JPF.
4.25	1410	00 - 35	TEST LUBRICATOR AND PACK-OFF TO 6000 PSI GOOD. RIH W/ 3.2" OD WASH NOZZEL ON 1.75" COILED TBG CIRCULATING TO TOP OF
		-	CBP AT 4200' CIRC. CLEAN, TRACE SAND IN RETURNS. POOH W/ WASH NOZZEL. INSTALL PKR, JET SUB, CENTRALIZERS, TO ASSEMBLY.
		-	PICK-UP ADDITIONAL 10' OF 5 1/8" LUBRICATOR.
	1800	00 - 00	SECURE WELL.
		-	
		-	
		-	
		-	
		-	
		-	
		-	
		-	
		-	
		-	
		-	
		-	
		-	
		-	

RECEIVED

AUG 18 2003

DIV. OF OIL, GAS & MINING

Safety: OTHERS HRS: 203

24 Hr Summary:

Projected Oper:

Fluid Lost To Formation Daily: Cumulative: Incidents: NO INCIDENT REPORTED

Hours Charged To			Hours Used		Other Charges	H_2S:
Contractor:	Chevron:	Travel:	Tongs:	Circ. Equip:		

Remarks:
AM: RIH START FRAC'S

Daily Mud Cost: $	Daily Tangible Cost: $ 0	Daily Well Cost: $ 830		Chevron %:
Cum Mud Cost: $	Cum Tangible Cost: $ 0	Cum Well Cost: $ 37,948	Total Appropriated Cost: $ 285,000	
Materials On Hand:				

AFE Number: UWDC000067COM		API Well Number: 43-015-30587	Well ID: HO7201	Project ID: 1
Country: U.S.A.	Rig:	Rig Phone: 435-828-6054	Drilling Rep: STEVE KEBERT	
Field: OTHER	Lease: ZDINS FEDERAL	Well No: 35-157	Date:14-Aug-2003	
			Page 1 of 1	

T16S R07E SEC-35

43-015-30587

ChevronTexaco

Daily Completion/WO Report

Spud Date: 04-Jun-2003	Start Date: 30-Jun-2003	Actual Days: 14	Auth. Days:	MD: 4,283'	TVD: 4,283'	PBTD: 4,205'
Job Description: INITIAL COMPLETION				KB Correction: 0.0	Orig KB Elev: 16.0	
				Wind:	Seas: /	Bar: / FCB:

Mud Type:	Wt:	FV:	PV:	YP:	Gel:	
Prod Casing Size: 5.500"	Weight: 17.00	Grade: L80	Set @ 4,282' MD 4,282' TVD		Cmt. Top@	
Liner Size:	Weight:	Grade:	Set @ MD TVD		Top @ MD TVD	

Tubing Size	Wt.	Grade	Threads	Depth	Details

Packer Set At	Description	Perforations From	To	Details

Fish Top @ Description:

BHA No:	Details:	Bit Data: Number	Type	Serial Number

Total hours Reported: 11.5

Hours	From	Act-Cat	Operations Covering 24 Hours Ending at Midnight
0.50	600	00 - 02	SAFETY MEETING: 4 PT'S TIF. JSA: SUSPENDED LOADS, INDIVIDUAL RESPONSIBILITIES.
0.25	630	00 - 48	TEST LINES AND ANNULUS TO 5000 PSI GOOD.
2.25	645	00 - 00	START IN HOLE W/ COIL, PKR SET IN LUBRICATOR, BUCKLING COIL ABOVE CONNECTOR. CUT OUT BAD SECTION OF COIL INSTALL COIL
		-	CONNECTOR & BHA. PULL TEST TO 40 K GOOD. TEST LINES AND ANNULUS TO 5000 PSI GOOD.
3.25	900	00 - 00	START IN HOLE W/ PKR AND BHA. TO 3700'. ATTEMPT TO REVERSE CIRC. TO TOP OF CIBP. FOUND PACK-OFF RUBBER WORN OUT. CHANGE
		-	OUT SAME. FOUND 20% OF PREVIOUS PACK-OFF RUBBER DOWN HOLE. CIRC. WELL TO REMOVE RUBBER. TAG PLUG AT 4165' CTM. (PLUG
		-	AT 4300') MARK AND PAINT COIL FOR EACH INTERVAL.
1.41	1215	00 - 00	JET PERFS: 4143 - 4146. 2 SPF 180 DEG. PHASING. BID PERFS AT 1310 PSI, AVG RATE: 22 BPM, AVG PSI: 2000 PSI, TOTAL SAND
		-	PUMPED: 80,100 LBS. TOTAL FLUID: 644 BBLS. (ZONE SAND FRACTURED AS DESIGNED.)
0.50	1345	00 - 00	RELEASE PKR AND SET FOR NEXT SET OF PERFS PACKER WOULD SET , BUT NOT HOLD PRESSURE. ATTEMPT TO SET PKR NUMEROUS
		-	TIMES UNSUCCESSFUL.
1.10	1430	00 - 00	POOH W/ BHA.
1.30	1540	00 - 00	LAY DOWN BHA. ALL EQUIP. JET SUB, CIRC. SUB, PACKER LOOKED GOOD.
	1700	00 - 00	SECURE WELL.
		-	
		-	
		-	
		-	
		-	
		-	
		-	
		-	

AUG 1 8 2003

DIV. OF OIL, GAS & MIN

Safety: OTHERS HRS: 440

24 Hr Summary:

Projected Oper:

Fluid Lost To Formation Daily: Cumulative: Incidents: NO INCIDENT REPORTED

Hours Charged To			Hours Used		Other Charges	Kg$:
Contractor:	Chevron:	Travel:	Tongs:	Circ. Equip:		

Remarks:
HALCO - COILED TBG TECHNICIAN OUT OF CANADA , TO ARRIVE AND REPAIR HYDRAULICS ON CT SYSTEM.

Daily Mud Cost: $	Daily Tangible Cost: $ 0	Daily Well Cost: $ 1,268		Chevron %:
Cum Mud Cost: $	Cum Tangible Cost: $ 0	Cum Well Cost: $ 37,118	Total Appropriated Cost: $ 285,000	
Materials On Hand:				

AFE Number: UWOC030087COM		API Well Number: 43-015-30587	Well ID: H07261	Project ID: 1
Country: U.S.A.	Rig:	Rig Phone: 435-828-8084	Drilling Rep:	STEVE KEBERT
Field: OTHER	Lease: ZONS FEDERAL	Well No: 35-137		Date: 13-Aug-2003
				Page 1 of 1

T16S R01E SEC-35

43-015-30587

ChevronTexaco

Daily Completion/WO Report

Spud Date: 14-JUN-2003	Start Date: 30-JUN-2003	Actual Days: 13	Auth.Days:	MD: 4,263 '	TVD: 4,263 '	PBTD: 4,205 '	
Job Description: INITIAL COMPLETION				KB Correction: 0.000		Orig KB Elev: 16.000	
				Wind:	Seas:	Tar:	PGB:
Mud Type:		Wt:	FV:	PV:	YP:	NL:	
Prod Casing Size: 5.500 "	Weight: 17.00	Grade: I80	Set @ 4,262 ' MD	4,262 ' TVD		Cst.Top@	
Liner Size:	Weight:	Grade:	Set @ MD	TVD	Top @ MD	TVD	

Tubing Size	Wt.	Grade	Threads	Depth	Details

Packer Set At	Description	Perforations From	To	Details

Fish Top @ Description:

BHA No:	Details:	Bit Data		
		Number	Type	Serial Number

Hours	From	Act-Cat	Operations Covering 24 Hours Ending at Midnight	Total hours Reported: 9.5
0.50	600	99 - 62	SAFETY MEETING : 4 PIE TIP. JSA: INDIVIDUAL RESPONSIBILITIES.	
0.83	630	99 - 24	TEST LINES TO 5000 PSI GOOD. TEST COIL TO 7500 PSI GOOD.	
1.16	720	05 - 35	ATTEMPT TO RIH PKR AND BHA IN HOLE ON COILED TBG. THE PACKER WAS SETTING AS SOON WAS ENTERING THE 5 1/2" CSG.	
		-	PULL PACKER OUT OF HOLE FOUND ELEMENT CUT.	
1.50	830	05 - 56	CHANGE OUT PACKER. WHEN PULLING PACKER INTO THE LUBRICATOR, THE SHEAR DISCONNECT SHEARED. ALLOWING BHA TO FALL	
		-	TO THE COILED TBG UNIT FLOOR, RESULTING IN A FIRST AID TO THE TOOL SUPERVISOR.	
1.00	1000	99 - 99	INVESTIGATE INCIDENT.	
4.50	1100	99 - 62	HELD SAFETY MEETING. TEAR DOWN BACKERS, REMOVED PACKER PROBLEM. RIH W/ PACKER AND BHA TO 50'. INTO CSG NO	
		-	PROBLEMS. PULL BHA INTO LUBRICATOR .	
	1830	99 - 60	SECURE WELL.	
		-		
		-		
		-		
		-		
		-		
		-		
		-		
		-		
		-		
		-		
		-		
		-		

AUG 18 2003

DIV OF OIL, GAS & MINING

Safety: OTHERS HRS: 297

24 Hr Summary:

Projected Oper: WELL HRAC IN AM.

Fluid Lost To Formation Daily:	Cumulative:	Incidents: FIRST AID

Hours Charged To			Hours Used		Other Charges	$_2$S:
Contractor:	ChvTex:	Travel:	Tongs:	Circ. Equip:		

Remarks:

Daily Mud Cost:	Daily Tangible Cost: $ 0	Daily Well Cost: $ 510		ChvTex %:
Cum Mud Cost:	Cum Tangible Cost: $ 0	Cum Well Cost: $ 35,910	Total Appropriated Cost: $ 285,000	
Materials On Hand:				

API Number: UNDCH2057COM	API Well Number: 43-015-30587-00	Well ID: HKX251	Project ID: 1
Country: U.S.A.	Rig:	Rig Phone: 435-829-6054	Drilling Rep: STEVE MERRIT
Field: FERRON-NEWTOWN	Lease: STONE FEDERAL	Well No: 35-137	Date: 12-NOV-2003
			Page: 1 Of 1

T16S R07E SEC-35

43-015-30587

ChevronTexaco

Daily Completion/WO Report

Spud Date: 14-JUN-2003	Start Date: 30-JUN-2003	Actual Days: 12	Auth.Days:	MD: 4,262 '	TVD: 4,262 '	PBTD: 4,295 '	
Job Description: INITIAL COMPLETION				KB Correction: 0.000	Orig KB Elev: 16.000		
				Wind:	Seas:	Bar:	FCB:
Mud Type:		Wt:	PV:	PV:	YP:	WL:	
Prod Casing Size: 5.500 "	Weight: 17.00	Grade: L80	Set @ 4,262 ' MD	4,262 ' TVD		Cmt.Top@	
Liner Size:	Weight:	Grade:	Set @ MD	TVD	Top @ MD	TVD	

Tubing Size	Wt.	Grade	Threads	Depth	Details

Packer Set At	Description	Perforations From	To	Details

Fish Top @ Description:

BHA No:	Details:	Bit Data		
		Number	Type	Serial Number

Total hours Reported: 9.0

Hours	From	Act-Cat	Operations Covering 24 Hours Ending at Midnight
0.50	900	99 - 62	SAFETY MEETING: 4 PTS TIP. JSA, RIG UP PROCEDURES.
8.50	930	99 - 24	RIG UP 1 3/4" COILED TBG UNIT AND ALL PRAC EQUIPMENT. MAKE UP PACKER, CENTRALIZER, BALL-CHECK SUB, HYDRA-JET
		-	SUB, BLAST JTS, CENTRALIZER, SWAB DISCONNECT, KNUCKLE JT, COIL CONNECTOR. (OVER-ALL LENGTH 23.96') TEST
		-	COIL CONNECTOR 40K GOOD.
	1600	99 - 60	SECURE WELL.
		-	
		-	
		-	
		-	
		-	
		-	
		-	
		-	
		-	
		-	
		-	
		-	
		-	
		-	
		-	
		-	
		-	

AUG 18 2003

DIV. OF OIL, GAS & MINING

Safety: OVERRS HRS: 298

24 Hr Summary:

Projected Oper: FRAC IN AM

Fluid Lost To Formation Daily: Cumulative: Incidents: NO INCIDENT REPORTED

Hours Charged To			Hours Used		Other Charges	$2S:
Contractor:	ChvTex:	Travel:	Tongs:	Circ. Equip:		

Remarks:

Daily Mud Cost:	Daily Tangible Cost: $ 0	Daily Well Cost: $ 7,950		ChvTex $:
Cum Mud Cost:	Cum Tangible Cost: $ 0	Cum Well Cost: $ 35,380	Total Appropriated Cost: $ 265,000	
Materials On Hand:				

AFE Number: UNDCB2057CDN	AFE Well Number: 43-015-30587-00	Well ID: HCT251	Project ID: 1
Country: U.S.A.	Rig:	Rig Phone: 435-828-6054	Drilling Rep: STEVE HERMET
Field: FRENCH-HUNTINGTON	Lease: KOHS FEDERAL	Well No: 35-137	Date: 11-AUG-2003
			Page: 1 Of 1

T16S R09E SEC-35

43-015-30587

43-015-30587

015

ChevronTexaco

Mid-Continent Business Unit
Facsimile Transmittal Sheet

RECEIVED
SEP 15 2003
DIV. OF OIL, GAS & MINING

DATE:

TO:

Company: State of Utah

Name: Carol Daniels

Phone:

Fax: 801-359-3940

FROM:

Company: ChevronTexaco

Name: Darla Nelson

Phone: 281-561-3790

Fax: 281-561-3645

No. of pages including cover sheet:

MESSAGE: Weekly morning reports

ChevronTexaco — **Daily Completion/WO Report**

Spud Date: 04-Jun-2003	Start Date: 30-Jun-2003	Actual Days: 71	Auth. Days:	MD: 4,283'	TVD: 4,283'	PBTD: 4,077'
Job Description: INITIAL COMPLETION				KB Correction: 0.0		Orig KB Elev: 16.0
				Wind:	Seas: /	Bar: / POB:
Mud Type:		Wt:	FV:	PV:	YP:	WL:
Prod Casing Size: 5.500"	Weight: 17.00	Grade: L80	Set @ 4,282' MD	4,282' TVD		Cmt. Top@
Liner Size:	Weight:	Grade:	Set @ MD	TVD	Top @ MD	TVD

Tubing Size	Wt.	Grade	Threads	Depth	Details

Packer Set At	Description	Perforations From	To	Details

Fish Top @ Description:

BHA No:	Details:	Bit Data		
		Number	Type	Serial Number

Hours	From	Act-Cat	Operations Covering 24 Hours Ending at Midnight (Total hours Reported: 13.5)
0.50	700	99 - 62	SAFETY MEETING: 4 PTS TIF. JSA: INDIVIDUAL RESPONSIBILITIES. AWARENESS
1.50	730	08 - 35	FINISH R.U. PUMP TRUCKS. TEST LINES AND LUBRICATOR TO 5000 PSI GOOD.
2.50	900	08 - 35	RIH W/ PKR AND JET SUB,TAG UP W/ PKR ON PLUG TOP AT 4077' CORRECT SAME AND SET PKR.
1.50	1130	08 - 48	JET PERFS 4082-4085 2SPF 180 DEG PHASING. REVERSE XLINK PAD TO PERFS, SPOT 4 BBLS 15%HCL. BREAKDOWN PERFS AT 2205 PSI,
		-	AVG RATE: 2-4 BPM, PUMPED 6000 GALS OF PAD AND PRESSURED OUT AT 4900 PSI. SPOT 200 GALS 15% HCL DOWN TBG TO PERFS ONCE
		-	AGAIN, UNSUCCESSFUL. PUMP INTO AND PRESSURE OUT AT 4900 PSI. REVERSE 1700 GALS OF 1/4# SAND TO PERFS, SHUT IN TBG
		-	ATTEMPTING TO SQUEEZE SCOUR INTO PERFS UNSUCCESSFUL PRESSURED OUT AT 4900 PSI.
3.00	1300	08 - 48	REVERSE SAND FROM WELL. MUCH COAL IN RETURNS. CIRC. WELL W/ 7000 GALS 2% KCL H20, (4200 GAL) VOLUME, STILL MUCH COAL
		-	FINES IN RETURNS. ATTEMPT TO RELEASE PKR. PACKER WOULD NOT RELEASE. REVERSE CLEAN DOWN ANNULUS UP COIL. RELEASE PACKER.
1.50	1600	08 - 48	ZONE #8 JET PERFS 4036-4039 2SPF 180 DEG PHASING. B/D PERFS AT 2720 PSI, AVG RATE: 12 BPM, AVG. PSI: 2200 PSI, TOTAL
		-	SAND PUMPED: 43,700 LBS, TOTAL FLUID PUMPED: 473 BBLS. ZONE PUMPED AS DESIGNED.
1.00	1730	08 - 48	ZONE #7 JET PERFS 4022-4025 2SPF 180 DEG PHASING. B/D PERFS AT 1078 PSI, AVG RATE: 15 BPM, AVG PSI: 1500 PSI. TOTAL
		-	SAND PUMPED: 49,400 LBS, TOTAL FLUID PUMPED: 444 BBLS. ZONE PUMPED AS DESIGNED.
1.00	1830	08 - 48	ZONE #6 JET PERFS 3992-3995 2SPF 180 DEG PHASING. B/D PERFS AT 1710 PSI, AVG RATE: 25 BPM, ATP: 2200 PSI. TOTAL SAND
		-	PUMPED: 66,600 LBS. TOTAL FLUID PUMPED: 605 BBLS. ZONE PUMPED AS DESIGNED.
1.00	1930	08 - 48	POOH W/ COILED TBG. PULL BHA INTO LUBRICATOR. SECURE WELL.
	2030	99 - 99	FINAL REPORT UNTIL FURTHER ACTIVITY. (3435 BBLS LOAD WATER TO RECOVER.)
		-	
		-	
		-	
		-	
		-	

RECEIVED
SEP 15 2003
DIV. OF OIL, GAS & MINING

Safety: OTHERS HRS: 523

24 Hr Summary:

Projected Oper: RIG DOWN IN AM. RIG UP ON ZIONS FED. 35-135R

Fluid Lost To Formation Daily: Cumulative: Incidents: NO INCIDENT REPORTED

Hours Charged To			Hours Used		Other Charges	H_2S:
Contractor:	Chevron:	Travel:	Tongs:	Circ. Equip:		

Remarks:

Daily Mud Cost: $	Daily Tangible Cost: $ 0	Daily Well Cost: $ 530		Chevron %:
Cum Mud Cost: $	Cum Tangible Cost: $ 0	Cum Well Cost: $ 45,816	Total Appropriated Cost: $ 285,000	

Materials On Hand:

AFE Number: UWDCB02057COM	API Well Number: 43-015-30587	Well ID: HK7251	Project ID: 1
Country: U.S.A.	Rig:	Rig Phone: 435-828-8054	Drilling Rep: STEVE KEBERT
Field: OTHER	Lease: ZOIN'S FEDERAL	Well No: 35-137	Date: 08-Sep-2003
			Page 1 of 1

T16S R02E S-35
43-015-30587

ChevronTexaco

Daily Cost Estimate

No.	Description			Daily $	Cum $
1	Rig Daywork	74400001 KEY			9,173
2	Footage / Turnkey	74400002			
4	Supervision	66010100	500	500	7,500
4A	Contract Labor	70000300			
5	Co. Drill Equip. Use	(Non - SAP)			
6	Fuel - Diesel / Motor Fuels	71290100			
6B	Util - Other (Potable Water)	71290300			
8	FCR Mobilization / De-Mob	74500023			600
9	Drilling Fluids	74400004			
10	Materials, Supply, Parts	71900500			
11	Other Transportation-Land	73400300			9,100
11A	ATC - Air Transportation	73400400			
11B	Marine Transportation	73200200			
12	Directional Survey & Serv.	74400006			
13	Drill String Rentals & Bits	74400007			2,100
14	Surface Equipment Rentals	72300100 ABB VETCO			2,540
14A	WCR - Stim. / Gravel Pack	74400010			
14B	Well Service Equip. Rentals	72300200			
14C	WCR - Coil Tubing	74400009			
14D	WCR - Pumping Services	74400011			
14E	Radio	76150500			
14F	Telephone	76150600			
15	Solid Waste Disposal	74200300			
15A	WCR - Equip. Lost in Hole	74400013			
15C	Perf. & Electric Line Serv.	74400014 SCHLUMBERGER			5,408
15D	Waste Water Disposal	74200600			
15E	WCR - Slickline Services	74400015			
20	WCR - Coring	74400017			
21	WCR - Testing	74400018			
22	Logging Wireline	74400019			1,860
22A	LWD Logging & Tools	74400020			
23	WCR - Logging Mud	74400021			
30	Casing	71900022			
30A	Tubing Under 2" O.D.	71900020			
30B	Tubing Over 2" O.D.	71900021			
31	Wel Equipment & Materials	71900100			
31A	Wellheads	71900110			
32	WCR - Cement & Cementing	74400024			2,600
40	WCR Fishing Costs	74400025			
53	Surface Producing Equip.	71500100			
54	Site Work/Roads/Locations	74500021 GARDINERS			2,400
55	Environment				
56	Sub - Total			500	43,219
61	Dist/Div/Area Expense	(Non - SAP)			
62	Capitalized G & A	94100700	30	30	2,697

	$	Days
Original Appropriations	$	
Total Appropriated	$ 265,000	

Total Field Estimate (Daily)	530	
Total Estimated Cost (Cumulative)		45,916

RECEIVED
SEP 15 2003
DIV. OF OIL, GAS & MINING

Days on Location: 71	Well ID: HI/7251	Project No: -1	AFE No: UWDC802057COM	Page 1 of 1
Rig:		Well No: 35-137	Prepared By: STEVE KEBERT	
Field: FERRON-HUNTINGTON		Lease: ZIONS FEDERAL		Date THRU: 09-Sep-2003

ChevronTexaco

Daily Completion/WO Report

Spud Date: 04-Jun-2003	Start Date: 30-Jun-2003	Actual Days: 68	Auth. Days:	MD: 4,283'	TVD: 4,283'	PBTD: 4,077'
Job Description: INITIAL COMPLETION				KB Correction: 0.0	Orig KB Elev: 16.0	
				Wind:	Seas: /	Bar: / POB:

Mud Type:	Wt:	FV:	PV:	YP:	Ml:

Prod Casing Size: 5.500"	Weight: 17.00	Grade: L80	Set @ 4,282' MD 4,282' TVD		Cmt. Top@
Liner Size:	Weight:	Grade:	Set @ MD TVD	Top @ MD TVD	

Tubing Size	Wt.	Grade	Threads	Depth	Details

Packer Set At	Description	Perforations From	To	Details

Fish Top @ Description:

BHA No:	Details:	Bit Data		
		Number	Type	Serial Number

Hours	From	Act.-Cat.	Operations Covering 24 Hours Ending at Midnight (Total hours Reported: 12.0)
0.50	730	99 - 02	SAFETY MEETING: 4 PTS TIF. JSA: SUSPENDED LOADS, PINCH POINTS. GOOD COMMUNICATION.
4.50	800	08 - 35	R.U. HALCO MAST COILED TBG UNIT W/ 1.75" COIL. INSTALL AND PULL TEST COIL CONNECTOR TO 35K GOOD. INSTALL 3 3/16" WASH
		-	NOZZEL, 30K SHEAR DISCONNECT. N/U 7 1/16" 5M VALVE, 7 1/16" 5M BOP W/ 1.75" RAMS, 7 1/16" 5M FRAC CROSS, 7 1/16" QUAD
		-	RAMS, 5' LUBRICATOR.
0.75	1230	08 - 99	FILL COIL AND TEST ANNULUS ABOVE LOWER MASTER VALVE TO 5000 PSI GOOD. (HAD TO HAMMER UP SEVERAL LEAKS ON FRAC CROSS
		-	BEFORE SAME TESTED)
3.25	1315	08 - 35	RIH AND TAG UP AT 4073'. CLEAN OUT FRAC SAND TO TOP OF CIBP AT 4206'. PUMPED 2 40 VIS GEL SWEEPS 15 BBLS EACH AT 4205'
		-	~ 95% RETURNS. POOH W/ WASH NOZZEL.
1.50	1630	08 - 24	R.U. SCHLUMBERGER. SET WIRE-LINE SET TBG RETRIEVE 10K DIFF PLUG AT (4077' TOP OF PLUG.)POOH L/D SETTING TOOL. R.D.
		-	SCHLUMBERGER.
1.50	1800	08 - 99	MAKE-UP 4.55"OD PKR, 4.65"OD CENTRALIZER, BALL SUB 3 3/16"OD, JET-SUB 3 3/16"OD, 4.65"OD CENTRALIZER, DISCONNECT 3
		-	3/16"OD, CONNECTOR 3 3/16"OD. (OVER-ALL LENGTH 14.86')
	1930	08 - 99	SECURE WELL.
		-	
		-	
		-	
		-	
		-	
		-	
		-	
		-	
		-	

RECEIVED
SEP 15 2003
DIV. OF OIL, GAS & MINING

Safety: OTHERS HRS: 341

24 Hr Summary:

Projected Oper: START FRACTURING IN AM.

Fluid Lost To Formation Daily: Cumulative: Incidents: NO INCIDENT REPORTED

Hours Charged To			Hours Used		Other Charges	H_2S:
Contractor:	Chevron:	Travel:	Tongs:	Circ. Equip:		

Remarks:

Daily Mud Cost: $	Daily Tangible Cost: $ 0	Daily Well Cost: $ 5,518		Chevron %:
Cum Mud Cost: $	Cum Tangible Cost: $ 0	Cum Well Cost: $ 45,288	Total Appropriated Cost: $ 285,000	

Materials On Hand:

AFE Number: UWDC802057COM	API Well Number: 43-015-30587	Well ID: HK7251	Project ID: 1
Country: U.S.A.	Rig:	Rig Phone: 435-828-8054	Drilling Rep: STEVE KEBERT
Field: OTHER	Lease: ZOIN'S FEDERAL	Well No: 35-137	Date: 08-Sep-2003
			Page 1 of 1

ChevronTexaco

Daily Cost Estimate

No.	Description				Daily $	Cum $
1	Rig Daywork	74400001	KEY			9,173
2	Footage / Turnkey	74400002		500	500	7,000
4	Supervision	66010100				
4A	Contract Labor	70000300				
5	Co. Drill.Equip. Use	(Non - SAP)				
6	Fuel - Diesel / Motor Fuels	71290100				
6B	Util - Other (Potable Water)	71290300				600
8	FCR Mobilization / De-Mob	74500023				
9	Drilling Fluids	74400004				
10	Materials, Supply, Parts	71900500				9,100
11	Other Transportation-Land	73400300				
11A	ATC - Air Transportation	73400400				
11B	Marine Transportation	73200200				
12	Directional Survey & Serv.	74400006				
13	Drill String Rentals & Bits	74400007				2,100
14	Surface Equipment Rentals	72300100	ABB VETCO			2,540
14H	WCR - Strn. / Gravel Pack	74400010				
14E	Well Service Equip. Rentals	72300200				
14C	WCR - Coil Tubing	74400009				
14D	WCR - Pumping Services	74400011				
14E	Radio	76150500				
14F	Telephone	76150600				
15	Solid Waste Disposal	74200300				
15A	WCR - Equip. Lost in Hole	74400013				
15C	Perf. & Electric Line Serv.	74400014	SCHLUMBERGER	3,408	3,408	5,408
15D	Waste Water Disposal	74200600				
15E	WCR - Slickline Services	74400015				
20	WCR - Coring	74400017				
21	WCR - Testing	74400018				1,800
22	Logging Wireline	74400019				
22B	LWD Logging & Tools	74400020				
23	WCR - Logging Mud	74400021				
30	Casing	71900022				
30A	Tubing Under 2" O.D.	71900020				
30B	Tubing Over 2" O.D.	71900021				
31	Well Equipment & Materials	71900100				
31A	Wellheads	71900110				2,600
32	WCR - Cement & Cementing	74400024				
40	WCR Fishing Costs	74400025				
53	Surface Producing Equip.	71500100				
54	Site World Reader Locations	74500021	GARDINERS	1,300	1,300	2,400
55	Environment					
56	Sub - Total				5,208	42,719
61	Dist/Div/Area Expense	(Non - SAP)		312	312	2,587
62	Capitalized G & A	84100700				
				Total Field Estimate (Daily)	5,518	
				Total Estimated Cost (Cumulative)		45,298

	$	Days
Original Appropriations	$	
Total Appropriated	$ 285,000	

RECEIVED
SEP 15 2003
DIV. OF OIL, GAS & MINING

Days on Location: 88	Well ID: HK7251	Project No: -1	AFE No: UWDCB02057COM	Page 1 of 1
Rig:		Well No: 35-137	Prepared By: STEVE KEBERT	
Field: FERRON-HUNTINGTON		Lease: ZIONS FEDERAL	Date/TIME: 08-Sep-2003	

016

43.015.30587

ChevronTexaco

Mid-Continent Business Unit
Facsimile Transmittal Sheet

DATE: _____

TO:

Company: State of Utah

Name: Carol Daniels

Phone: _____

Fax: 801-359-3940

FROM:

Company: ChevronTexaco

Name: Darla Nelson

Phone: 281-561-3790

Fax: 281-561-3645

SEP 23 2003

DIV OF OIL, GAS & MINING

No. of pages including cover sheet: _____

MESSAGE: Weekly morning reports

ChevronTexaco

Daily Completion/WO Report

Spud Date: 04-Jun-2003	Start Date: 30-Jun-2003	Actual Days: 72	Auth.Days:	MD: 4,283'	TVD: 4,283'	PBTD: 4,077'
Job Description: INITIAL COMPLETION				KB Correction: 0.0	Orig KB Elev: 16.0	
				Wind:	Seas: /	Bar: / POB:
Mud Type:		Wt:	FV:	PV:	YP:	WL:

Prod Casing Size: 5.500"	Weight: 17.00	Grade: L80	Set @ 4,282' MD 4,282' TVD		Cmt.Top@
Liner Size:	Weight:	Grade:	Set @ MD TVD	Top @ MD TVD	

Tubing Size	Wt.	Grade	Threads	Depth	Details

Packer Set At	Description	Perforations From	To	Details
		3,992	4,145	2 SPF, 180 DEG PHASING 8 ZONES

Fish Top @ Description:

BHA No:	Details:	Bit Data		
		Number	Type	Serial Number

Hours	From	Act-Cat	Operations Covering 24 Hours Ending at Midnight (Total hours Reported: 10.0)
0.50	700	99 - 62	SAFETY MEETING: 4 PTS TIF, LIFTING HAZARDS, FALL POTENTIAL, POWERLINES, ELEVATED WORK LOADS, PINCH POINTS, HIGH NOISE
		-	LEVELS. JSA: RU KEY UNIT # 908.
3.00	730	99 - 38	RU KEY W/O RIG, ND FRAC VALVE, NU DOUBLE BOP & TEST TO 250 LOW-3500 HIGH. TESTS GOOD.
3.00	1030	99 - 31	RIH W/ RETRIEVING TOOL FOR OUTLAW'S 5-1/2" WLTC PLUG ON 2-7/8", 6.5#, J-55, 8RD TUBING.
0.50	1330	99 - 31	INSTALL STRIPPING HEAD. CONTINUE RIH & TAG SAND @ 4015'.
0.50	1400	99 - 62	INSTALL SERVICE SWIVEL & WASH SAND DOWN TO TOP OF PLUG.
1.00	1430	99 - 62	RELEASE RETRIEVABLE PACKER, ATTEMPT TO POOH. PLUG STUCK.
1.50	1530	99 - 62	GET OFF OF PLUG. POOH. SECURE WELL FOR THE NIGHT.
		-	
		-	
		-	
		-	
		-	
		-	
		-	
		-	
		-	
		-	
		-	
		-	
		-	
		-	

RECEIVED
SEP 23 2003
DIV OF OIL GAS

Safety: OTHERS: 60 HRS. CVX: 10 HRS.

24 Hr Summary: RIH WASH OUT SAND. ATTEMPT TO PULL RETRIEVABLE PLUG - STUCK, GET OFF PLUG & POOH.

Projected Opar: TOMORROW WILL RIH & JAR PLUG FREE.

Fluid Lost To Formation Daily:	Cumulative:	Incidents: NO INCIDENT REPORTED	
Hours Charged To	Hours Used	Other Charges	H_2S:
Contractor: / Chevron: / Travel:	Tongs: / Circ. Equip:		

Remarks:

Daily Mud Cost: $	Daily Tangible Cost: $ 0	Daily Well Cost: $ 4,835		Chevron %:
Cum Mud Cost: $	Cum Tangible Cost: $ 0	Cum Well Cost: $ 50,851	Total Appropriated Cost: $ 265,000	

Materials On Hand:

AFE Number: UWDCBD2057COM	API Well Number: 43-015-30587	Well ID: HK7251	Project ID: 1
Country: U.S.A.	Rig:	Rig Phone: 713 580 4348	Drilling Rep: BILL WILSON
Field: OTHER	Lease: ZOIN'S FEDERAL	Well No: 35-137	Date: 22-Sep-2003
			Page 1 of 1

T 16S R 07E S-35
43-015-30587

ChevronTexaco

Mid-Continent Business Unit
Facsimile Transmittal Sheet

DATE:

TO:

Company: State of Utah

Name: Carol Daniels

Phone:

Fax: 801-359-3940

FROM:

Company: ChevronTexaco

Name: Darla Nelson

Phone: 281-561-3790

Fax: 281-561-3645

No. of pages including cover sheet:

MESSAGE: Weekly morning reports

RECEIVED
SEP 29 2003
DIV. OF OIL GAS & MINING

017

ChevronTexaco **Daily Completion/WO Report**

Spud Date: 04-Jun-2003	Start Date: 30-Jun-2003	Actual Days: 74	Auth. Days:	MD: 4,283'	TVD: 4,283'	PBTD: 4,077'
Job Description: INITIAL COMPLETION				KB Correction: 0.0	Orig KB Elev: 16.0	
				Wind:	Seas: /	Bar: / FOB:

Mud Type:	Wt:	FV:	PV:	YP:	WL:	
Prod Casing Size: 5.500"	Weight: 17.00	Grade: L80	Set @ 4,282' MD 4,282' TVD		Cmt. Tops	
Liner Size:	Weight:	Grade:	Set @ MD TVD	Top @ MD TVD		

Tubing Size	Wt.	Grade	Threads	Depth	Details

Packer Set At	Description	Perforations From	To	Details
		3,992	4,145	2 SPF, 180 DEG PHASING 8 ZONES

Fish Top @ Description:

BHA No:	Details:	Bit Data		
		Number	Type	Serial Number

Hours	From	Act.-Cat.	Operations Covering 24 Hours Ending at Midnight	Total hours Reported: 7.0
0.50	700	99 - 99	SAFETY MEETING. TIF. PULLING UP RODS SAFELY FROM TRAILER	
3.50	730	99 - 99	RIH W/ TO187 1-1/4" PUMP, 5 SINKER BARS, 3550' 3/4" RODS, 7/8" RODS TO SURFACE.	
2.00	1100	99 - 55	SPACE OUT RODS, FILL TUBING. HORSE'S HEAD ISN'T FITTING CORRECTLY, CALLED WEATHERFORD FOR REPAIRS.	
1.00	1300	99 - 55	RD UNIT 906 & MOVE TO UTAH FEDERAL 1-206D.	

Safety: OTHERS: 50 HRS, CVX: 8 HRS.

24 Hr Summary:

Projected Oper: DROP FROM REPORT.

Fluid Lost To Formation Daily: Cumulative: Incidents: NO INCIDENT REPORTED

Hours Charged To			Hours Used		Other Charges	H_2S:
Contractor:	Chevron:	Travel:	Tongs:	Circ. Equip:		

Remarks:

Daily Mud Cost: $	Daily Tangible Cost: $ 0	Daily Well Cost: $ 2,862		Chevron %:
Cum Mud Cost: $	Cum Tangible Cost: $ 0	Cum Well Cost: $ 69,168	Total Appropriated Cost: $ 285,000	

Materials On Hand:

AFE Number: UWDCBD2057COM	API Well Number: 43-015-30587	Well ID: HK7251	Project ID: 1
Country: U.S.A.	Rig:	Rig Phone: 713 580 4348	Drilling Rep:
Field: OTHER	Lease: ZOWN'S FEDERAL	Well No: 35-137	Date: 24-Sep-2003
			Page 1 of 1

T16S R07E SEC-35
43-015-30587

RECEIVED
SEP 29 2003
DIV. OF OIL, GAS & MINING

ChevronTexaco — **Daily Completion/WO Report**

Spud Date: 04-Jun-2003	Start Date: 30-Jun-2003	Actual Days: 73	Auth. Days:	MD: 4,283'	TVD: 4,283'	PBTD: 4,077'
Job Description: INITIAL COMPLETION				KB Correction: 0.0	Orig KB Elev: 16.0	
				Wind:	Seas: /	Bar: / POB:

Mud Type:	Wt:	FV:	PV:	YP:	WL:

Prod Casing Size: 5.500"	Weight: 17.00	Grade: L80	Set @ 4,282' MD 4,282' TVD		Cmt. Top@
Liner Size:	Weight:	Grade:	Set @ MD TVD	Top @ MD TVD	

Tubing Size	Wt.	Grade	Threads	Depth	Details

Packer Set At	Description	Perforations From	To	Details
		3,992	4,145	2 SPF, 180 DEG PHASING 8 ZONES

Fish Top @ Description:

BHA No:	Details:	Bit Data		
		Number	Type	Serial Number

Hours	From	Act-Cat	Operations Covering 24 Hours Ending at Midnight — Total hours Reported: 9.0
0.50	700	99 - 02	SAFETY MEETING: 4 PTS TIF, PINCH POINTS, HANDLING COLLARS, FALL PROTECTION.
4.50	730	99 - 18	MU RETRIEVING TOOL, BUMPER SUB, JARS, 6 DRILL COLLARS. RIH, LATCH ONTO FISH. CAME LOOSE THIRD HIT. POOH. TOOL WAS
		-	SCORED ALL AROUND-CASING PROBABLY EGGED 4077-4084'.
1.00	1200	99 - 18	BREAK OUT TOOLS, LAY DOWN COLLARS.
2.00	1300	99 - 18	RIH W/ PINNED NOTCHED COLLAR, 1 JT 2-7/8" TBG, SN, 2-7/8", 6.5#, EUE, 8 RD TBG, TAG @ 4195'.
1.00	1500	99 - 18	WASH DOWN TO CIBP @ 4205'. CIRC CLEAN. PULL UP AND LAND EOT @ 4153'.
	1600	99 - 18	ND 2-7/8" BOPS, NU TBG HEAD ASSEMBLY TO RUN RODS.
		-	
		-	
		-	
		-	
		-	
		-	
		-	
		-	
		-	
		-	
		-	
		-	
		-	
		-	
		-	

Safety: OTHERS: 60 HRS, CVX: 10 HRS.

24 Hr Summary: RIH W/ JARS, PULL PLUG, POOH, LAY DOWN TOOLS, RIH W/ 2-7/8" PROD ASSEMBLY, ND 2-7/8" BOPS-NU TBG HEAD ASSEMBLY

Projected Opar: RUN RODS & HANG WELL ON.

Fluid Lost To Formation Daily:	Cumulative:	Incidents: NO INCIDENT REPORTED

Hours Charged To			Hours Used		Other Charges	H_2S:
Contractor:	Chevron:	Travel:	Tongs:	Circ. Equip:		

Remarks:

Daily Mud Cost: $	Daily Tangible Cost: $ 0	Daily Well Cost: $ 15,655		Chevron %:
Cum Mud Cost: $	Cum Tangible Cost: $ 0	Cum Well Cost: $ 68,308	Total Appropriated Cost: $ 285,000	

Materials On Hand:

AFE Number: UWDC8D2057COM	API Well Number: 43-015-30587	Well ID: HK7251	Project ID: 1
Country: U.S.A.	Rig:	Rig Phone: 713 580 4346	Drilling Rep:
Field: OTHER	Lease: ZOINS FEDERAL	Well No: 35-437	Date: 23-Sep-2003
			Page 1 of 1

T16S R07E SEC-35
43-015-30587

RECEIVED
SEP 29 2003
DIV. OF OIL, GAS & MINING

FORM 7

STATE OF UTAH
DEPARTMENT OF NATURAL RESOURCES
DIVISION OF OIL, GAS AND MINING

REPORT OF WATER ENCOUNTERED DURING DRILLING

Well name and number: ZION'S FEDERAL 35-135

API number: 4301530587

Well Location: QQ NESE Section 35 Township 16S Range 7E County EMERY

Well operator: ChevronTexaco

Address: 11111 S. Wilcrest

city Houston state TX zip 77099 Phone: (281) 561-3449

Drilling contractor: Nabors Drilling USA

Address: 475 17th St, Ste 1300

city Denver state CO zip 80202 Phone:

Water encountered (attach additional pages as needed):

DEPTH		VOLUME	QUALITY
FROM	TO	(FLOW RATE OR HEAD)	(FRESH OR SALTY)
460	470	100 bbl per hour	not tested
		while drilling w/air	

Formation tops: (Top to Bottom)

1	2	3
4	5	6
7	8	9
10	11	12

If an analysis has been made of the water encountered, please attach a copy of the report to this form.

I hereby certify that this report is true and complete to the best of my knowledge.

NAME (PLEASE PRINT) Nina Kaufmann TITLE Geologic Tech

SIGNATURE Nina Kaufmann DATE 10/16/03

RECEIVED
OCT 20 2003
DIV. OF OIL, GAS & MINING

(5/2000)

CONFIDENTIAL

018

STATE OF UTAH
DEPARTMENT OF NATURAL RESOURCES
DIVISION OF OIL, GAS AND MINING

AMENDED REPORT ☐ (highlight changes)

FORM 8

WELL COMPLETION OR RECOMPLETION REPORT AND LOG

5. LEASE DESIGNATION AND SERIAL NUMBER: UTU-73085

6. IF INDIAN, ALLOTTEE OR TRIBE NAME: N/A

7. UNIT or CA AGREEMENT NAME: N/A

8. WELL NAME and NUMBER: ZION'S FEDERAL 35-137

9. API NUMBER: 4301530587

10 FIELD AND POOL, OR WILDCAT: BUZZARD BENCH

1a. TYPE OF WELL: OIL WELL ☐ GAS WELL ☑ DRY ☐ OTHER

b. TYPE OF WORK: NEW WELL ☑ HORIZ. LATS. ☐ DEEP-EN ☐ RE-ENTRY ☐ DIFF. RESVR. ☐ OTHER

2. NAME OF OPERATOR: ChevronTexaco

3. ADDRESS OF OPERATOR: 11111 S. Wilcrest CITY Houston STATE TX ZIP 77099 PHONE NUMBER: (281) 561-3449

4. LOCATION OF WELL (FOOTAGES)
AT SURFACE: 2031 FSL 787 FEL NESE
AT TOP PRODUCING INTERVAL REPORTED BELOW: SAME
AT TOTAL DEPTH: SAME

CONFIDENTIAL PERIOD EXPIRED ON 10-9-04

11. QTR/QTR, SECTION, TOWNSHIP, RANGE, MERIDIAN: NESE 35 16S 7E

12. COUNTY: EMERY

13. STATE: UTAH

14. DATE SPUDDED: 6/4/2003

15. DATE T.D. REACHED: 6/20/2003

16. DATE COMPLETED: 9/9/2003 ABANDONED ☐ READY TO PRODUCE ☑

17. ELEVATIONS (DF, RKB, RT, GL): 6676 KB

18. TOTAL DEPTH: MD 4,262 TVD

19. PLUG BACK T.D.: MD 4,220 TVD

20. IF MULTIPLE COMPLETIONS, HOW MANY? *

21. DEPTH BRIDGE PLUG SET: MD TVD

22. TYPE ELECTRIC AND OTHER MECHANICAL LOGS RUN (Submit copy of each)
ARRAY IND-TRIPLE LITHO DENSITY/COMPENSATED NEUTRON/GR CAL, CEMENT BOND LOG Rec 10-30-03

23.
WAS WELL CORED? NO ☑ YES ☐ (Submit analysis)
WAS DST RUN? NO ☑ YES ☐ (Submit report)
DIRECTIONAL SURVEY? NO ☑ YES ☐ (Submit copy)

24. CASING AND LINER RECORD (Report all strings set in well)

HOLE SIZE	SIZE/GRADE	WEIGHT (#/ft.)	TOP (MD)	BOTTOM (MD)	STAGE CEMENTER DEPTH	CEMENT TYPE & NO. OF SACKS	SLURRY VOLUME (BBL)	CEMENT TOP **	AMOUNT PULLED
12 1/4	8 5/8 J55	24		299		P 225		CIRC	
7 7/8	5 1/2 L80	17		4,262		RFC 140		3712/CBL	
7 7/8					646	RFC 200			

25. TUBING RECORD

SIZE	DEPTH SET (MD)	PACKER SET (MD)	SIZE	DEPTH SET (MD)	PACKER SET (MD)	SIZE	DEPTH SET (MD)	PACKER SET (MD)
2 7/8"	4,163							

26. PRODUCING INTERVALS

FORMATION NAME	TOP (MD)	BOTTOM (MD)	TOP (TVD)	BOTTOM (TVD)
(A) FERRON	3,992			
(B)				
(C)				
(D)				

27. PERFORATION RECORD

INTERVAL (Top/Bot - MD)		SIZE	NO. HOLES	PERFORATION STATUS
3,992	4,145	.45	108	Open ☑ Squeezed ☐
				Open ☐ Squeezed ☐
				Open ☐ Squeezed ☐
				Open ☐ Squeezed ☐

28. ACID, FRACTURE, TREATMENT, CEMENT SQUEEZE, ETC.

DEPTH INTERVAL	AMOUNT AND TYPE OF MATERIAL
3992 - 4145	Pumped 311,500# 20/40 sd, 3,335 bbls Delta Frac 140. 1480 gal 15% HcL ahead.

29. ENCLOSED ATTACHMENTS:

☑ ELECTRICAL/MECHANICAL LOGS ☐ GEOLOGIC REPORT ☐ DST REPORT ☐ DIRECTIONAL SURVEY
☐ SUNDRY NOTICE FOR PLUGGING AND CEMENT VERIFICATION ☐ CORE ANALYSIS ☑ OTHER: FORM 7

30. WELL STATUS: PRODUCING

RECEIVED
OCT 20 2003
DIV. OF OIL, GAS & MINING

(5/2000)

(CONTINUED ON BACK)

31. INITIAL PRODUCTION

INTERVAL A (As shown in Item #26)

DATE FIRST PRODUCED:		TEST DATE:		HOURS TESTED:		TEST PRODUCTION RATES: ▯	OIL – BBL:	GAS – MCF:	WATER – BBL:	PROD. METHOD:
9/9/2003								0	94	
CHOKE SIZE:	TBG. PRESS.	CSG. PRESS.	API GRAVITY	BTU – GAS	GAS/OIL RATIO	24 HR PRODUCTION RATES: ▯	OIL – BBL:	GAS – MCF:	WATER – BBL:	INTERVAL STATUS:

INTERVAL B (As shown in Item #26)

DATE FIRST PRODUCED:		TEST DATE:		HOURS TESTED:		TEST PRODUCTION RATES: ▯	OIL – BBL:	GAS – MCF:	WATER – BBL:	PROD. METHOD:
CHOKE SIZE:	TBG. PRESS.	CSG. PRESS.	API GRAVITY	BTU – GAS	GAS/OIL RATIO	24 HR PRODUCTION RATES: ▯	OIL – BBL:	GAS – MCF:	WATER – BBL:	INTERVAL STATUS:

INTERVAL C (As shown in Item #26)

DATE FIRST PRODUCED:		TEST DATE:		HOURS TESTED:		TEST PRODUCTION RATES: ▯	OIL – BBL:	GAS – MCF:	WATER – BBL:	PROD. METHOD:
CHOKE SIZE:	TBG. PRESS.	CSG. PRESS.	API GRAVITY	BTU – GAS	GAS/OIL RATIO	24 HR PRODUCTION RATES: ▯	OIL – BBL:	GAS – MCF:	WATER – BBL:	INTERVAL STATUS:

INTERVAL D (As shown in Item #26)

DATE FIRST PRODUCED:		TEST DATE:		HOURS TESTED:		TEST PRODUCTION RATES: ▯	OIL – BBL:	GAS – MCF:	WATER – BBL:	PROD. METHOD:
CHOKE SIZE:	TBG. PRESS.	CSG. PRESS.	API GRAVITY	BTU – GAS	GAS/OIL RATIO	24 HR PRODUCTION RATES: ▯	OIL – BBL:	GAS – MCF:	WATER – BBL:	INTERVAL STATUS:

32. DISPOSITION OF GAS (Sold, Used for Fuel, Vented, Etc.)

33. SUMMARY OF POROUS ZONES (Include Aquifers):

Show all important zones of porosity and contents thereof: Cored intervals and all drill-stem tests, including depth interval tested, cushion used, time tool open, flowing and shut-in pressures and recoveries.

Formation	Top (MD)	Bottom (MD)	Descriptions, Contents, etc.

34. FORMATION (Log) MARKERS:

Name	Top (Measured Depth)
MANCOS SHALE	0
FERRON	3,985
TOP COAL	4,022

35. ADDITIONAL REMARKS (Include plugging procedure)

36. I hereby certify that the foregoing and attached information is complete and correct as determined from all available records.

NAME (PLEASE PRINT) Nina Kaufman TITLE Geology Tech

SIGNATURE Nina M Kaufman DATE 10/16/03

This report must be submitted within 30 days of

- completing or plugging a new well
- drilling horizontal laterals from an existing well bore
- recompleting to a different producing formation
- reentering a previously plugged and abandoned well
- significantly deepening an existing well bore below the previous bottom-hole depth
- drilling hydrocarbon exploratory holes, such as core samples and stratigraphic tests

* ITEM 20: Show the number of completions if production is measured separately from two or more formations.

** ITEM 24: Cement Top – Show how reported top(s) of cement were determined (circulated (CIR), calculated (CAL), cement bond log (CBL), temperature survey (TS)).

Send to: Utah Division of Oil, Gas and Mining
1594 West North Temple, Suite 1210
Box 145801
Salt Lake City, Utah 84114-5801

Phone: 801-538-5340

Fax: 801-359-3940

(5/2000)

STATE OF UTAH
DEPARTMENT OF NATURAL RESOURCES
DIVISION OF OIL, GAS AND MINING

FORM 9

SUNDRY NOTICES AND REPORTS ON WELLS

Do not use this form for proposals to drill new wells, significantly deepen existing wells below current bottom-hole depth, reenter plugged wells, or to drill horizontal laterals. Use APPLICATION FOR PERMIT TO DRILL form for such proposals.

5. LEASE DESIGNATION AND SERIAL NUMBER: Various Leases
6. IF INDIAN, ALLOTTEE OR TRIBE NAME:
7. UNIT or CA AGREEMENT NAME:
8. WELL NAME and NUMBER: See attached list
9. API NUMBER: Multiple
10. FIELD AND POOL, OR WILDCAT: Buzzard Bench

1. TYPE OF WELL: OIL WELL ☐ GAS WELL ☑ OTHER _____

2. NAME OF OPERATOR: XTO ENERGY INC. N2615

3. ADDRESS OF OPERATOR: 2700 Farmington Bldg K,Sui CITY Farmington STATE NM ZIP 87401 PHONE NUMBER: (505) 324-1090

4. LOCATION OF WELL
FOOTAGES AT SURFACE:
QTR/QTR, SECTION, TOWNSHIP, RANGE, MERIDIAN:
COUNTY: Emery
STATE: UTAH

11. CHECK APPROPRIATE BOXES TO INDICATE NATURE OF NOTICE, REPORT, OR OTHER DATA

TYPE OF SUBMISSION	TYPE OF ACTION		
☐ NOTICE OF INTENT (Submit in Duplicate)	☐ ACIDIZE	☐ DEEPEN	☐ REPERFORATE CURRENT FORMATION
Approximate date work will start: _____	☐ ALTER CASING	☐ FRACTURE TREAT	☐ SIDETRACK TO REPAIR WELL
	☐ CASING REPAIR	☐ NEW CONSTRUCTION	☐ TEMPORARILY ABANDON
	☐ CHANGE TO PREVIOUS PLANS	☑ OPERATOR CHANGE	☐ TUBING REPAIR
	☐ CHANGE TUBING	☐ PLUG AND ABANDON	☐ VENT OR FLARE
☑ SUBSEQUENT REPORT (Submit Original Form Only)	☐ CHANGE WELL NAME	☐ PLUG BACK	☐ WATER DISPOSAL
Date of work completion:	☐ CHANGE WELL STATUS	☐ PRODUCTION (START/RESUME)	☐ WATER SHUT-OFF
	☐ COMMINGLE PRODUCING FORMATIONS	☐ RECLAMATION OF WELL SITE	☐ OTHER: _____
_____	☐ CONVERT WELL TYPE	☐ RECOMPLETE - DIFFERENT FORMATION	

12. DESCRIBE PROPOSED OR COMPLETED OPERATIONS. Clearly show all pertinent details including dates, depths, volumes, etc.

Effective August 1,2004, the operator changed from Chevron U.S.A. Inc. to XTO ENERGY INC. for all wells on the attached list.

BLM #579173

State and Fee Bond #104312762

Kenneth W. Jackson Regulatory Specialist ChevronTexaco for Chevron U.S.A. Inc. N0210

NAME (PLEASE PRINT) James L. Death TITLE Vice President-Land

SIGNATURE James L. Death DATE 8/16/04

(This space for State use only)

APPROVED 9/30/2004
Earlene Russell
Division of Oil, Gas and Mining
Earlene Russell, Engineering Technician

(See Instructions on Reverse Side)

(5/2000)

RECEIVED
SEP 28 2004
DIV. OF OIL, GAS & MINING

API Well Number	Well Name	Well Type	County Name	Qtr/Qtr	Section	Twn-Rng
43-015-30242-00-00	L M LEMMON 10-1	Gas Well	EMERY	SESE	10	17S-8E
43-015-30243-00-00	FEDERAL B21-3	Gas Well	EMERY	NESW	21	19S-7E
43-015-30244-00-00	FEDERAL A26-2	Gas Well	EMERY	SESW	26	18S-7E
43-015-30245-00-00	FEDERAL C23-8	Gas Well	EMERY	NENW	23	18S-7E
43-015-30246-00-00	FEDERAL A26-4	Gas Well	EMERY	SWSE	26	18S-7E
43-015-30247-00-00	FEDERAL A35-6	Gas Well	EMERY	NWNW	35	18S-7E
43-015-30248-00-00	FEDERAL A35-5	Gas Well	EMERY	NWNE	35	18S-7E
43-015-30249-00-00	FEDERAL A34-7	Gas Well	EMERY	NENE	34	18S-7E
43-015-30258-00-00	UTAH FED P 10-47	Gas Well	EMERY	NWNW	10	18S-7E
43-015-30259-00-00	A L JENSEN 27-9	Gas Well	EMERY	SESE	27	21S-6E
43-015-30268-00-00	ST OF UT T 36-10	Gas Well	EMERY	SWNE	36	16S-7E
43-015-30270-00-00	ST OF UT U 2-11	Gas Well	EMERY	NWNW	2	18S-7E
43-015-30272-00-00	SWD 1	Water Disposal Well	EMERY	SWNW	24	18S-7E
43-015-30274-00-00	UTAH FED S 8-46	Gas Well	EMERY	SESW	8	18S-7E
43-015-30275-00-00	UTAH FED R 9-45	Gas Well	EMERY	NWNE	9	18S-7E
43-015-30276-00-00	UTAH FED P 10-42	Gas Well	EMERY	NWNE	10	18S-7E
43-015-30277-00-00	UTAH FED P 10-43	Gas Well	EMERY	NWSE	10	18S-7E
43-015-30280-00-00	UTAH FED Q 4-44	Gas Well	EMERY	SESE	4	18S-7E
43-015-30282-00-00	UTAH FED D 34-12	Gas Well	EMERY	SESE	34	17S-7E
43-015-30285-00-00	UTAH FED D 35-13	Gas Well	EMERY	SWSW	35	17S-7E
43-015-30286-00-00	UTAH FED D 35-14	Gas Well	EMERY	NWNW	35	17S-7E
43-015-30287-00-00	UTAH FED D 35-15	Gas Well	EMERY	SWSE	35	17S-7E
43-015-30292-00-00	UTAH FED M 6-25	Gas Well	EMERY	SENE	6	17S-8E
43-015-30294-00-00	UTAH FED H 6-21	Gas Well	EMERY	SESW	6	20S-7E
43-015-30303-00-00	SWD 3	Water Disposal Well	EMERY	SENE	11	18S-7E
43-015-30306-00-00	ST OF UT U 2-48	Gas Well	EMERY	NWNE	2	18S-7E
43-015-30308-00-00	ST OF UT U 2-50	Gas Well	EMERY	NESW	2	18S-7E
43-015-30309-00-00	ST OF UT U 2-49	Gas Well	EMERY	NWSE	2	18S-7E
43-015-30310-00-00	L & M CURTIS 10-58	Gas Well	EMERY	SWSW	10	18S-7E
43-015-30311-00-00	ST OF UT X 16-66	Gas Well	EMERY	SENW	16	18S-7E
43-015-30312-00-00	ST OF UT X 16-65	Gas Well	EMERY	NWNE	16	18S-7E
43-015-30313-00-00	U P & L 14-53	Gas Well	EMERY	SESE	14	18S-7E
43-015-30314-00-00	U P & L 14-55	Gas Well	EMERY	NWNW	14	18S-7E
43-015-30315-00-00	U P & L 23-51	Gas Well	EMERY	SENE	23	18S-7E
43-015-30316-00-00	U P & L 24-57	Gas Well	EMERY	NWNW	24	18S-7E
43-015-30318-00-00	D & A JONES 15-68	Gas Well	EMERY	NENW	15	18S-7E
43-015-30319-00-00	D&D CURTIS 14-54	Gas Well	EMERY	SENE	14	18S-7E
43-015-30320-00-00	P & K PEACOCK 8-62	Gas Well	EMERY	SWNE	8	18S-7E
43-015-30321-00-00	PEACOCK TRUST 9-60	Gas Well	EMERY	NWSW	9	18S-7E
43-015-30323-00-00	SWD 2	Water Disposal Well	EMERY	NWNW	14	18S-7E
43-015-30324-00-00	R G NORRIS 14-40	Gas Well	EMERY	NESW	14	18S-7E
43-015-30325-00-00	L & M CURTIS 15-67	Gas Well	EMERY	NENE	15	18S-7E
43-015-30326-00-00	PEACOCK TRUST 8-61	Gas Well	EMERY	NESE	8	18S-7E
43-015-30327-00-00	PEACOCK 7-64	Gas Well	EMERY	NENE	7	18S-7E
43-015-30328-00-00	PEACOCK TRUST 8-63	Gas Well	EMERY	SENW	8	18S-7E
43-015-30329-00-00	D & A JONES 9-59	Gas Well	EMERY	SESE	9	18S-7E
43-015-30381-00-00	UTAH STATE 1-76	Gas Well	EMERY	NWNW	1	18S-7E
43-015-30382-00-00	UTAH STATE 36-78	Gas Well	EMERY	SWSW	36	17S-7E
43-015-30383-00-00	USA 3-74	Gas Well	EMERY	SESE	3	18S-7E
43-015-30384-00-00	USA 3-75	Gas Well	EMERY	NENE	3	18S-7E
43-015-30385-00-00	USA 11-70	Gas Well	EMERY	SWSE	11	18S-7E
43-015-30386-00-00	USA 11-71	Gas Well	EMERY	SWNE	11	18S-7E
43-015-30387-00-00	USA 11-72	Gas Well	EMERY	NWNW	11	18S-7E
43-015-30388-00-00	USA 11-73	Gas Well	EMERY	NWSW	11	18S-7E
43-015-30389-00-00	USA 34-80	Gas Well	EMERY	SENE	34	17S-7E
43-015-30390-00-00	USA 34-82	Gas Well	EMERY	SESW	34	17S-7E
43-015-30393-00-00	ST OF UT EE 06-138	Gas Well	EMERY	NENW	6	17S-9E
43-015-30396-00-00	ST OF UT AA 07-106	Gas Well	EMERY	NWNE	7	17S-8E
43-015-30437-00-00	ST OF UT BB 09-119	Gas Well	EMERY	SESW	9	17S-8E
43-015-30438-00-00	ST OF UT CC 10-124	Gas Well	EMERY	SENE	10	17S-8E
43-015-30439-00-00	ST OF UT DD 31-98	Gas Well	EMERY	NWSW	31	17S-8E
43-015-30440-00-00	FEDERAL T 27-85	Gas Well	EMERY	SENW	27	18S-7E
43-015-30441-00-00	UP&L 06-102	Gas Well	EMERY	NENW	6	17S-8E
43-015-30442-00-00	UP&L 06-104	Gas Well	EMERY	NESE	6	17S-8E
43-015-30443-00-00	WM S IVIE ET AL 09-118	Gas Well	EMERY	SWNE	9	17S-8E

API Well Number	Well Name	Well Type	County Name	Qtr/Qtr	Section	Twn-Rng
43-015-30444-00-00	ST OF UT BB 09-120	Gas Well	EMERY	NESE	9	17S-8E
43-015-30445-00-00	FEDERAL A 26-88	Gas Well	EMERY	SWNW	26	18S-7E
43-015-30446-00-00	FEDERAL A 35-89	Gas Well	EMERY	NWSW	35	18S-7E
43-015-30447-00-00	FEDERAL C 23-84	Gas Well	EMERY	NESW	23	18S-7E
43-015-30448-00-00	FEDERAL P 3-92	Gas Well	EMERY	SESW	3	18S-7E
43-015-30449-00-00	FEDERAL P 3-93	Gas Well	EMERY	SWNW	3	18S-7E
43-015-30450-00-00	FEDERAL T 21-94	Gas Well	EMERY	NENE	21	18S-7E
43-015-30451-00-00	FEDERAL T 22-69	Gas Well	EMERY	NENE	22	18S-7E
43-015-30452-00-00	FEDERAL T 22-83	Gas Well	EMERY	SWSE	22	18S-7E
43-015-30453-00-00	FEDERAL T 22-91	Gas Well	EMERY	NENW	22	18S-7E
43-015-30454-00-00	ST OF UT CC 10-123	Gas Well	EMERY	NWNW	10	17S-8E
43-015-30455-00-00	FEDERAL T 27-86	Gas Well	EMERY	SENE	27	18S-7E
43-015-30456-00-00	FEDERAL T 27-87	Gas Well	EMERY	SESE	27	18S-7E
43-015-30457-00-00	FEDERAL T 27-90	Gas Well	EMERY	NWSW	27	18S-7E
43-015-30458-00-00	ST OF UT FF 10-125	Gas Well	EMERY	NESW	10	17S-8E
43-015-30459-00-00	ST OF UT FF 11-129	Gas Well	EMERY	NWNW	11	17S-8E
43-015-30462-00-00	ST OF UT FF 11-130	Gas Well	EMERY	NWSW	11	17S-8E
43-015-30478-00-00	GARDNER TRUST ET AL 16-121	Gas Well	EMERY	NENE	16	17S-8E
43-015-30479-00-00	ST OF UT BB 05-107	Gas Well	EMERY	SENW	5	17S-8E
43-015-30480-00-00	ST OF UT BB 05-108	Gas Well	EMERY	NWSW	5	17S-8E
43-015-30481-00-00	ST OF UT BB 05-109	Gas Well	EMERY	SENE	5	17S-8E
43-015-30482-00-00	ST OF UT BB 05-110	Gas Well	EMERY	SWSE	5	17S-8E
43-015-30483-00-00	UP&L 06-103	Gas Well	EMERY	NESW	6	17S-8E
43-015-30484-00-00	AMERICA WEST GROUP ET AL 15-126	Gas Well	EMERY	NENW	15	17S-8E
43-015-30485-00-00	W H LEONARD ET AL 15-127	Gas Well	EMERY	NENE	15	17S-8E
43-015-30486-00-00	ROWLEY 08-111	Gas Well	EMERY	SENW	8	17S-8E
43-015-30490-00-00	SWD 4	Water Disposal Well	EMERY	SENE	15	17S-8E
43-015-30495-00-00	SEELEY 08-112	Gas Well	EMERY	NENE	8	17S-8E
43-015-30496-00-00	ST OF UT BB 08-113	Gas Well	EMERY	NWSE	8	17S-8E
43-015-30497-00-00	ST OF UT AA 07-105	Gas Well	EMERY	SWNW	7	17S-8E
43-015-30498-00-00	ST OF UT 01-97	Gas Well	EMERY	SENE	1	18S-7E
43-015-30499-00-00	ST OF UT GG 03-122	Gas Well	EMERY	SWSW	3	17S-8E
43-015-30500-00-00	ST OF UT HH 03-133	Gas Well	EMERY	SWSE	3	17S-8E
43-015-30501-00-00	SEELEY FARMS 09-117	Gas Well	EMERY	NWNW	9	17S-8E
43-015-30502-00-00	ST OF UT GG 15-128	Gas Well	EMERY	NWSW	15	17S-8E
43-015-30503-00-00	ST OF UT BB 04-116	Gas Well	EMERY	SWSE	4	17S-8E
43-015-30504-00-00	ST OF UT GG 04-115	Gas Well	EMERY	NESW	4	17S-8E
43-015-30505-00-00	BURNSIDE 14-132	Gas Well	EMERY	NWNE	14	17S-8E
43-015-30506-00-00	ST OF UT T 36-100	Gas Well	EMERY	NESE	36	16S-7E
43-015-30507-00-00	UT FED KK 01-140	Gas Well	EMERY	SENW	1	17S-7E
43-015-30508-00-00	ST OF UT II 36-96	Gas Well	EMERY	NWSE	36	17S-7E
43-015-30509-00-00	ST OF UT II 36-95	Gas Well	EMERY	NWNE	36	17S-7E
43-015-30510-00-00	SWD 5	Water Disposal Well	EMERY	SESE	23	17S-8E
43-015-30511-00-00	UP&L FED 01-101	Gas Well	EMERY	SENE	1	17S-7E
43-015-30520-00-00	ST OF UT SS 22-165	Gas Well	EMERY	NENE	22	17S-8E
43-015-30521-00-00	ZIONS FED 35-135R (RIG SKID)	Gas Well	EMERY	NESW	35	16S-7E
43-015-30528-00-00	ST OF UT 14-170	Gas Well	EMERY	SWSE	14	17S-8E
43-015-30529-00-00	CONOVER 14-171	Gas Well	EMERY	NWSW	14	17S-8E
43-015-30530-00-00	ST OF UT 36-139	Gas Well	EMERY	NWSW	36	16S-7E
43-015-30533-00-00	ST OF UT FO 02-186	Gas Well	EMERY	NENW	2	17S-8E
43-015-30549-00-00	ST OF UT JJ 03-160	Gas Well	EMERY	NWNW	3	17S-8E
43-015-30550-00-00	ST OF UT 36-138	Gas Well	EMERY	SWNW	36	16S-7E
43-015-30551-00-00	UT FED P 12-153	Gas Well	EMERY	NWNW	12	18S-7E
43-015-30552-00-00	ST OF UT CC 03-161	Gas Well	EMERY	SENE	3	17S-8E
43-015-30553-00-00	ST OF UT FO 02-188	Gas Well	EMERY	NWSW	2	17S-8E
43-015-30554-00-00	ST OF UT BB 04-158	Gas Well	EMERY	NENW	4	17S-8E
43-015-30555-00-00	ST OF UT BB 04-159	Gas Well	EMERY	SWNE	4	17S-8E
43-015-30556-00-00	MALONE 14-131	Gas Well	EMERY	SWNW	14	17S-8E
43-015-30559-00-00	UT FED KK 01-141	Gas Well	EMERY	SESE	1	17S-7E
43-015-30560-00-00	ST OF UT FO 02-189	Gas Well	EMERY	SWNE	2	17S-8E
43-015-30561-00-00	ST OF UT GG 15-184	Gas Well	EMERY	NWSE	15	17S-8E
43-015-30562-00-00	STATE OF UTAH "LL" 31-20	Gas Well	EMERY	NWNW	31	17S-8E
43-015-30566-00-00	ST OF UT "KK" 32-145	Gas Well	EMERY	NESE	32	16S-8E
43-015-30567-00-00	ST OF UT "KK" 32-144	Gas Well	EMERY	SWSW	32	16S-8E
43-015-30568-00-00	ST OF UT "AA" 18-153	Gas Well	EMERY	SESW	18	17S-8E

API Well Number	Well Name	Well Type	County Name	Qtr/Qtr	Section	Twn-Rng
43-015-30569-00-00	ST OF UT "AA" 07-146	Gas Well	EMERY	NESW	7	17S-8E
43-015-30570-00-00	ST OF UT "AA" 18-154	Gas Well	EMERY	NESE	18	17S-8E
43-015-30571-00-00	ST OF UT "AA" 17-156	Gas Well	EMERY	SWSE	17	17S-8E
43-015-30572-00-00	ST OF UT "AA" 18-149	Gas Well	EMERY	SENW	18	17S-8E
43-015-30573-00-00	ST OF UT "MM" 20-192	Gas Well	EMERY	SENW	20	17S-8E
43-015-30574-00-00	ST OF UT "MM" 20-193	Gas Well	EMERY	NENE	20	17S-8E
43-015-30575-00-00	ST OF UT MM 20-194	Gas Well	EMERY	NWSW	20	17S-8E
43-015-30576-00-00	ST OF UT AA 07-147	Gas Well	EMERY	SESE	7	17S-8E
43-015-30577-00-00	ST OF UT BB 08-148	Gas Well	EMERY	NWSW	8	17S-8E
43-015-30578-00-00	ST OF UT AA 18-150	Gas Well	EMERY	NWNE	18	17S-8E
43-015-30579-00-00	ST OF UT NN 19-157	Gas Well	EMERY	NENE	19	17S-8E
43-015-30580-00-00	ST OF UT AA 17-152	Gas Well	EMERY	NENE	17	17S-8E
43-015-30581-00-00	ST OF UT OO 16-190	Gas Well	EMERY	NESW	16	17S-8E
43-015-30582-00-00	ST OF UT PP 16-191	Gas Well	EMERY	NESE	16	17S-8E
43-015-30583-00-00	ST OF UT AA 17-151	Gas Well	EMERY	NENW	17	17S-8E
43-015-30585-00-00	ST OF UT MM 21-195	Gas Well	EMERY	NENW	21	17S-8E
43-015-30586-00-00	ST OF UT GG 21-163	Gas Well	EMERY	NENE	21	17S-8E
43-015-30587-00-00	ZIONS FED 35-137	Gas Well	EMERY	NESE	35	16S-7E
43-015-30589-00-00	UTAH FED 01-205D	Gas Well	EMERY	SENW	1	17S-7E
43-015-30590-00-00	ZIONS FED 02-134	Gas Well	EMERY	NWNW	2	17S-7E
43-015-30591-00-00	UTAH FED 12-197	Gas Well	EMERY	SENE	12	17S-7E
43-015-30592-00-00	ST OF UT QQ 31-201	Gas Well	EMERY	SESW	31	16S-8E
43-015-30593-00-00	ST OF UT AA 17-155	Gas Well	EMERY	SWSW	17	17S-8E
43-015-30601-00-00	UTAH FED 12-199	Gas Well	EMERY	NESE	12	17S-7E
43-015-30602-00-00	UTAH FED 35-196	Gas Well	EMERY	NENW	35	16S-7E
43-015-30603-00-00	UTAH FED 35-136	Gas Well	EMERY	SWNE	35	16S-7E
43-015-30604-00-00	UT FED 12-200D	Gas Well	EMERY	NESE	12	17S-7E
43-015-30605-00-00	UT FED 12-198D	Gas Well	EMERY	SENE	12	17S-7E
43-015-30606-00-00	ST OF UT QQ 31-204D	Gas Well	EMERY	SESW	31	16S-8E
43-015-30607-00-00	ST OF UT QQ 31-203D	Gas Well	EMERY	SESW	31	16S-8E
43-015-30608-00-00	ST OF UT QQ 31-202D	Gas Well	EMERY	SESW	31	16S-8E
43-015-30609-00-00	ST OF UT HH 23-166	Gas Well	EMERY	NENW	23	17S-8E

Division of Oil, Gas and Mining

OPERATOR CHANGE WORKSHEET

ROUTING
1. GLH
2. CDW
3. FILE

019

X Change of Operator (Well Sold) — Designation of Agent/Operator

Operator Name Change — Merger

The operator of the well(s) listed below has changed, effective: **8/1/2004**

FROM: (Old Operator):	**TO:** (New Operator):
N0210-Chevron USA, Inc	N2615-XTO Energy Inc
11111 S Wilcrest	2700 Farmington Ave, Bldg K Suite 1
Houston, TX 77099	Farmington, NM 87401
Phone: 1-(281) 561-4991	Phone: 1-(505) 324-1090

CA No. **Unit:**

WELL(S)

NAME	SEC	TWN	RNG	API NO	ENTITY NO	LEASE TYPE	WELL TYPE	WELL STATUS		
ZIONS FED 35-135R (RIG SKID)	35	160S	070E	4301530521	13810	Federal	GW	P	C	K
ZIONS FED 35-137	35	160S	070E	4301530587	13811	Federal	GW	P	C	
UTAH FED 35-196	35	160S	070E	4301530602		Federal	GW	APD	C	
UTAH FED 35-136	35	160S	070E	4301530603		Federal	GW	APD	C	
UT FED KK 01-140	01	170S	070E	4301530507	13553	Federal	GW	P		
UP&L FED 01-101	01	170S	070E	4301530511	13546	Federal	GW	P		
UT FED KK 01-141	01	170S	070E	4301530559	13587	Federal	GW	P		
UTAH FED 01-205D	01	170S	070E	4301530589	13828	Federal	GW	P	C	
ZIONS FED 02-134	02	170S	070E	4301530590		Federal	GW	APD	C	
UTAH FED 12-197	12	170S	070E	4301530591		Federal	GW	APD	C	
UTAH FED 12-199	12	170S	070E	4301530601		Federal	GW	APD	C	
UT FED 12-200D	12	170S	070E	4301530604		Federal	GW	APD	C	
UT FED 12-198D	12	170S	070E	4301530605		Federal	GW	APD	C	K
L M LEMMON 10-1	10	170S	080E	4301530242	11724	Fee	GW	P		
L & M CURTIS 10-58	10	180S	070E	4301530310	12201	Fee	GW	TA		
SWD 3	11	180S	070E	4301530303	12915	Fee	WD	I		K
UT FED P 12-153	12	180S	070E	4301530551		Federal	GW	APD	C	K
U P & L 14-53	14	180S	070E	4301530313	12333	Fee	GW	P		
SWD 1	24	180S	070E	4301530272	99990	Fee	WD	A		
A L JENSEN 27-9	27	210S	060E	4301530259	11990	Fee	GW	TA		

OPERATOR CHANGES DOCUMENTATION

Enter date after each listed item is completed

1. (R649-8-10) Sundry or legal documentation was received from the **FORMER** operator on: 9/28/2004
2. (R649-8-10) Sundry or legal documentation was received from the **NEW** operator on: 9/28/2004
3. The new company was checked on the **Department of Commerce, Division of Corporations Database on:** 7/19/2004
4. Is the new operator registered in the State of Utah: YES Business Number: 5655506-0143
5. If **NO**, the operator was contacted contacted on:

6a. (R649-9-2)Waste Management Plan has been received on: to follow

6b. Inspections of LA PA state/fee well sites complete on: being worked

7. **Federal and Indian Lease Wells:** The BLM and or the BIA has approved the merger, name change, or operator change for all wells listed on Federal or Indian leases on: BLM not yet BIA n/a

8. **Federal and Indian Units:**
The BLM or BIA has approved the successor of unit operator for wells listed on: n/a

9. **Federal and Indian Communization Agreements ("CA"):**
The BLM or BIA has approved the operator for all wells listed within a CA on: n/a

10. **Underground Injection Control ("UIC")** The Division has approved UIC Form 5, **Transfer of Authority to Inject,** for the enhanced/secondary recovery unit/project for the water disposal well(s) listed on: 9/28/2004

DATA ENTRY:

1. Changes entered in the **Oil and Gas Database on:** 9/30/2004
2. Changes have been entered on the **Monthly Operator Change Spread Sheet on:** 9/30/2004
3. Bond information entered in RBDMS on: 9/30/2004
4. Fee/State wells attached to bond in RBDMS on: 9/30/2004
5. Injection Projects to new operator in RBDMS on: 9/30/2004
6. Receipt of Acceptance of Drilling Procedures for APD/New on: 9/28/2004

FEDERAL WELL(S) BOND VERIFICATION:

1. Federal well(s) covered by Bond Number: 579173

INDIAN WELL(S) BOND VERIFICATION:

1. Indian well(s) covered by Bond Number: n/a

FEE & STATE WELL(S) BOND VERIFICATION:

1. (R649-3-1) The **NEW** operator of any fee well(s) listed covered by Bond Number 104312762

2. The **FORMER** operator has requested a release of liability from their bond on: n/a
The Division sent response by letter on: n/a

LEASE INTEREST OWNER NOTIFICATION:

3. (R649-2-10) The **FORMER** operator of the fee wells has been contacted and informed by a letter from the Division of their responsibility to notify all interest owners of this change on: 10/5/2004

COMMENTS:

Form 3160-5
(August 1999)

UNITED STATES
DEPARTMENT OF THE INTERIOR
BUREAU OF LAND MANAGEMENT

FORM APPROVED
OMB No. 1004-0135
Expires November 30, 2000

SUNDRY NOTICES AND REPORTS ON WELLS

020

Do not use this form for proposals to drill or to re-enter an abandoned well. Use Form 3160-3 (APD) for such proposals.

SUBMIT IN TRIPLICATE - Other instructions on reverse side

5. Lease Serial No.
~~UTU-73085~~ UTU73085

6. If Indian, Allottee or Tribe Name

7. If Unit or CA/Agreement, Name and/or No.

1. Type of Well
☐ Oil Well ☒ Gas Well ☐ Other

8. Well Name and No.
All Wells on Lease

2. Name of Operator
XTO ENERGY INC.

9. API Well No.
Multiple

3a. Address
2700 Farmington Ave. Bldg K, Suite 1 Farmington, NM 87401

3b. Phone No. *(include area code)*
(505) 324-1090

10. Field and Pool, or Exploratory Area
Buzzard's Bench

4. Location of Well *(Footage, Sec., T., R., M., or Survey Description)*

T. 16S, R. 7E, S. 35 43.015.30587

11. County or Parish, State
Emery, Utah

12. CHECK APPROPRIATE BOX(ES) TO INDICATE NATURE OF NOTICE, REPORT, OR OTHER DATA

TYPE OF SUBMISSION	TYPE OF ACTION			
☐ Notice of Intent	☐ Acidize	☐ Deepen	☐ Production (Start/Resume)	☐ Water Shut-Off
☒ Subsequent Report	☐ Alter Casing	☐ Fracture Treat	☐ Reclamation	☐ Well Integrity
☐ Final Abandonment Notice	☐ Casing Repair	☐ New Construction	☐ Recomplete	☒ Other Operator Change
	☐ Change Plans	☐ Plug and Abandon	☐ Temporarily Abandon	
	☐ Convert to Injection	☐ Plug Back	☐ Water Disposal	

13. Describe Proposed or Completed Operation (clearly state all pertinent details, including estimated starting date of any proposed work and approximate duration thereof. If the proposal is to deepen directionally or recomplete horizontally, give subsurface locations and measured and true vertical depths of all pertinent markers and zones. Attach the Bond under which the work will be performed or provide the Bond No. on file with BLM/BIA. Required subsequent reports shall be filed within 30 days following completion of the involved operations. If the operation results in a multiple completion or recompletion in a new interval, a Form 3160-4 shall be filed once testing has been completed. Final Abandonment Notices shall be filed only after all requirements, including reclamation, have been completed, and the operator has determined that the site is ready for final inspection.)

Effective August 1, 2004, the operator for lease # UTU-~~73065~~ 73085 changed from Chevron U.S.A. Inc. to XTO ENERGY INC.

XTO ENERGY's Nationwide Bond is ~~570173.~~ UTB000138
(Surety ID: 10431275D)

RECEIVED
2004 SEP 29 P 3:02
DEPT OF THE INTERIOR
BUREAU OF LAND MGMT
MOAB FIELD OFFICE

14. I hereby certify that the foregoing is true and correct
Name *(Printed/Typed)* Edwin S. Ryan, Jr. Title Sr. VP-Land

Signature Edwin S. Ryan, Jr. Date 9/27/04

THIS SPACE FOR FEDERAL OR STATE OFFICE USE

Approved by ACCEPTED Title Division of Resources Date SEP 29 2004

Conditions of approval, if any, are attached. Approval of this notice does not warrant or certify that the applicant holds legal or equitable title to those rights in the subject lease which would entitle the applicant to conduct operations thereon.

Office Moab Field Office

Title 18 U.S.C. Section 1001 and Title 43 U.S.C. Section 1212, make it a crime for any person knowingly and willfully to make to any department or agency of the United States any false, fictitious or fraudulent statements or representations as to any matter within its jurisdiction.

RECEIVED
OCT 27 2004
DIV. OF OIL, GAS & MINING

cc: UDOGM

Conditions Attached

API Well Number	Well Name	Well Type	Well Status	County Name	Lease No.	Qtr/Qtr	Section	Location (Twn-Rng)
					UTU73085			
43-015-30521-00-00	ZIONS FED 35-135R (RIG SKID	Gas Well	Producing	EMERY	~~UTU73065~~	NESW	35	16S-7E
43-015-30587-00-00	ZIONS FED 35-137	Gas Well	Producing	EMERY	~~UTU73065~~	NESE	35	16S-7E

XTO Energy Inc.
Well Nos. 35-135R and 35-137
Section 35, T. 16 S., R. 7 E.
Lease UTU73085
Emery County, Utah

CONDITIONS OF ACCEPTANCE

Acceptance of these applications does not warrant or certify that the applicant holds legal or equitable title to those rights in the subject lease which would entitle the applicant to conduct operations thereon.

Be advised that XTO Energy Inc. is considered to be the operator of the above wells effective August 1, 2004, and is responsible under the terms and conditions of the lease for the operations conducted on the leased lands.

Bond coverage for these well is provided by UTB000138 (Principal – XTO Energy Inc.) via surety consent as provided for in 43 CFR 3104.2.

This office will hold the aforementioned operator and bond liable until the provisions of 43CFR 3106.7-2 continuing responsibility are met.

4301530587

FORM 9

STATE OF UTAH
DEPARTMENT OF NATURAL RESOURCES
DIVISION OF OIL, GAS AND MINING

5. LEASE DESIGNATION AND SERIAL NUMBER: UTU-73965

SUNDRY NOTICES AND REPORTS ON WELLS

6. IF INDIAN, ALLOTTEE OR TRIBE NAME:

7. UNIT or CA AGREEMENT NAME:

Do not use this form for proposals to drill new wells, significantly deepen existing wells below current bottom-hole depth, reenter plugged wells, or to drill horizontal laterals. Use APPLICATION FOR PERMIT TO DRILL form for such proposals.

1. TYPE OF WELL: OIL WELL ☐ GAS WELL ☑ OTHER

8. WELL NAME and NUMBER: LM LEMMON #10-01

2. NAME OF OPERATOR: XTO ENERGY INC.

9. API NUMBER: Various (See attached

3. ADDRESS OF OPERATOR: 2700 Farmington, Bldg K-1 CITY Farmington STATE NM ZIP 87401

PHONE NUMBER: (505) 324-1090

10. FIELD AND POOL, OR WILDCAT: FERRON SANDSTONE

4. LOCATION OF WELL

FOOTAGES AT SURFACE: 660' FSK & 792' FEL

COUNTY: EMERY

QTR/QTR, SECTION, TOWNSHIP, RANGE, MERIDIAN: SESE 10 17S 08E

STATE: UTAH

11. CHECK APPROPRIATE BOXES TO INDICATE NATURE OF NOTICE, REPORT, OR OTHER DATA

TYPE OF SUBMISSION	TYPE OF ACTION		
☑ NOTICE OF INTENT (Submit in Duplicate)	☐ ACIDIZE	☐ DEEPEN	☐ REPERFORATE CURRENT FORMATION
Approximate date work will start	☐ ALTER CASING	☐ FRACTURE TREAT	☐ SIDETRACK TO REPAIR WELL
1/1/2004	☐ CASING REPAIR	☐ NEW CONSTRUCTION	☐ TEMPORARILY ABANDON
	☐ CHANGE TO PREVIOUS PLANS	☐ OPERATOR CHANGE	☐ TUBING REPAIR
	☐ CHANGE TUBING	☐ PLUG AND ABANDON	☐ VENT OR FLARE
☐ SUBSEQUENT REPORT (Submit Original Form Only)	☐ CHANGE WELL NAME	☐ PLUG BACK	☐ WATER DISPOSAL
	☐ CHANGE WELL STATUS	☐ PRODUCTION (START/RESUME)	☐ WATER SHUT-OFF
Date of work completion	☑ COMMINGLE PRODUCING FORMATIONS	☐ RECLAMATION OF WELL SITE	☐ OTHER
	☐ CONVERT WELL TYPE	☐ RECOMPLETE - DIFFERENT FORMATION	

12. DESCRIBE PROPOSED OR COMPLETED OPERATIONS. Clearly show all pertinent details including dates, depths, volumes, etc.

XTO Energy Inc. acquired wells from Chevron/Texaco on August 1, 2004. Chevron/Texaco failed to file a Notice of Intent to surface commingle these wells and XTO Energy Inc. was unaware until recently that nothing had been filed. We are including with this application for surace commingle a list of the wells in Emery County and a spreadsheet showing production figures for these wells. Each well has its own meter then runs through a central delivery point where allocations are made.

XTO Energy Inc. is requesting approval for the commingle of these wells as well as off-lease measurement. As wells are drilled, additional sundries will be submitted to add to our surface commingle.

COPY SENT TO OPERATOR
Date: 6-12-07
Initials: RM

NAME (PLEASE PRINT): HOLLY C. PERKINS

TITLE: REGULATORY COMPLIANCE TECH

SIGNATURE: Holly C. Perkins

DATE: 5/15/2007

This space for State use only)

APPROVED BY THE STATE OF UTAH DIVISION OF OIL, GAS, AND MINING
DATE: 6/11/07
BY: D. K. Quad

Federal Approval Of This Action Is Necessary

RECEIVED
MAY 18 2007
DIV. OF OIL, GAS & MINING

(See Instructions on Reverse Side)

5/2000)

Utah Wells Surface Commingled at Huntington CDP

Well Name	API #	Status	Lease
American West Group 15-128	43-015-30484	Shut In	State
Conover 14-171	43-015-30529	Producing	State
Gardner Trust 16-121	43-015-30478	Producing	State
Lemmon LM 10-01	43-015-30242	Producing	Federal
Malone 14-131	43-015-30556	Producing	State
Rowley 08-111	43-015-30486	Producing	State
Seeley 08-112	43-015-30495	Producing	State
Seeley Farms 09-117	43-015-30501	Producing	State
State of Utah 16-8-31-12D	43-015-30608	Producing	State
State of Utah 16-8-31-32DX	43-015-30634	Producing	State
State of Utah 16-8-31-44D	43-015-30606	Producing	State
State of Utah 16-8-32-43	43-015-30566	Producing	State
State of Utah 17-8-15-14	43-015-30622	Producing	State
State of Utah 17-8-15-33	43-015-30561	Producing	State
State of Utah 17-8-17-32	43-015-30672	Producing	State
State of Utah 17-8-18-12	43-015-30626	Producing	State
State of Utah 17-8-18-24	43-015-30678	Producing	State
State of Utah 17-8-18-31	43-015-30671	Producing	State
State of Utah 17-8-18-43	43-015-30670	Producing	State
State of Utah 17-8-20-22	43-015-30623	Producing	State
State of Utah 17-8-21-33	43-015-30679	Producing	State
State of Utah 17-8-21-41	43-015-30631	Producing	State
State of Utah 17-8-22-14	43-015-30676	Producing	State
State of Utah 17-8-22-21	43-015-30624	Producing	State
State of Utah 17-8-28-12X	43-015-30699	Producing	State
State of Utah 17-8-3-11X	43-015-30635	Producing	State
State of Utah 17-8-4-21	43-015-30620	Producing	State
State of Utah 17-8-5-42R	43-015-30686	Producing	State
State of Utah 17-8-7-34	43-015-30621	Producing	State
State of Utah 17-8-8-14	43-015-30673	Producing	State
State of Utah 36-138	43-015-30550	Producing	State
State of Utah 36-139	43-015-30530	Producing	State
State of Utah AA 07-105	43-015-30497	Producing	State
State of Utah AA 07-106	43-015-30396	Producing	State
State of Utah AA 07-146	43-015-30569	Producing	State
State of Utah BB 04-116	43-015-30503	Producing	State
State of Utah BB 05-107	43-015-30479	Producing	State
State of Utah BB 05-108	43-015-30480	Producing	State
State of Utah BB 05-109	43-015-30481	P&A	State
State of Utah BB 05-110	43-015-30482	Producing	State
State of Utah BB 08-113	43-015-30496	Shut In	State
State of Utah BB 09-119	43-015-30437	Producing	State
State of Utah BB 09-120	43-015-30444	Producing	State
State of Utah CC 03-161	43-015-30552	Producing	State
State of Utah CC 10-123	43-015-30454	Producing	State
State of Utah CC 10-124	43-015-30438	Producing	State
State of Utah FF 10-125	43-015-30458	Producing	State
State of Utah FF 11-129	43-015-30459	Producing	State
State of Utah FF 11-130	43-015-30462	Shut In	State

Utah Wells Surface Commingled at Huntington CDP

State of Utah FO 02-186	43-015-30533	Producing	State
State of Utah FO 02-188	43-015-30553	Producing	State
State of Utah GG 03-122	43-015-30499	Producing	State
State of Utah GG 04-115	43-015-30504	Producing	State
State of Utah HH 03-133	43-015-30500	Producing	State
State of Utah II 36-95	43-015-30509	Producing	State
State of Utah II 36-96	43-01530508	Shut In	State
State of Utah KK 32-144	43-015-30567	Producing	State
State of Utah QQ 31-201	43-015-30592	Producing	State
State of Utah SS 22-165	43-015-30520	Producing	State
State of Utah T 36-10	43-015-30268	Producing	State
State of Utah T 36-100	43-015-30506	Producing	State
UP&L 06-102	43-015-30441	Producing	State
UP&L 06-103	43-015-30483	Producing	State
UP&L 06-104	43-015-30442	Producing	State
UP&L Federal 01-101	43-015-30511	Producing	Federal
Utah Federal 01-205D	43-015-30589	Producing	Federal
Utah Federal 16-7-35-21	43-015-30602	Producing	Federal
Utah Federal 16-7-35-32	43-015-30603	Producing	Federal
Utah Federal 17-7-12-22D	43-015-30605	Producing	Federal
Utah Federal 17-7-12-24D	43-015-30604	Producing	Federal
Utah Federal 17-7-12-42	43-015-30591	Producing	Federal
Utah Federal 17-7-12-43	43-015-30601	Producing	Federal
Utah Federal 17-7-3-41D	43-015-30697	Producing	Federal
Utah Federal KK 01-140	43-015-30507	Producing	Federal
Utah Federal KK 01-141	43-015-30559	Producing	Federal
Utah Federal M 06-25	43-015-30292	Producing	Federal
WH Leonard 15-127	43-015-30485	Producing	State
Wm S Ivie 09-118	43-015-30443	Producing	State
Zion's Federal 35-135R	43-015-30521	Producing	Federal
Zion's Federal 17-7-2-11	43-015-30590	Producing	Federal
Zion's Federal 35-137	43-015-30587	Producing	Federal

Utah Wells Surface Commingled at Orangeville CDP

Well Name	API #	Status	Lease	Notes
Curtis D&D 14-54	43-015-30319	Shut In	Federal	
Curtis L&M 10-58	43-015-30310	Shut In	Federal	
Curtis L&M 15-67	43-015-30325	Producing	Federal	
Federal A 18-7-26-12	43-015-30445	Producing	Federal	
Federal A 26-02	43-015-30244	Shut In	Federal	
Federal A 26-04	43-015-30246	Shut In	Federal	
Federal A 34-07	43-015-30249	Producing	Federal	
Federal A 35-05	43-015-30248	Producing	Federal	
Federal A 35-06	43-015-30247	Producing	Federal	
Federal A 35-89	43-015-30446	Producing	Federal	
Federal B 21-03	43-015-30243	Shut In	Federal	
Federal C 18-7-23-23R	43-015-30629	Producing	Federal	
Federal C 23-08	43-015-30245	Producing	Federal	
Federal P 03-92	43-015-30448	Producing	Federal	
Federal P 03-93	43-015-30449	Producing	Federal	
Federal T 18-07-22-34	43-015-30452	Producing	Federal	
Federal T 22-69	43-015-30451	Producing	Federal	
Federal T 27-87	43-015-30456	P&A	Federal	
Ferron St 4-36-18-7	43-015-30253	Producing	Federal	Operator: Merrion Oil & Gas
Jensen AL 27-09	43-015-30259	Shut In	State	
Jones D&A 09-59	43-015-30329	Producing	Federal	
Jones D&A 15-68	43-015-30318	Shut In	State	
Klinkhammer 1	43-015-30610	Shut In	Federal	Operator: Merrion Oil & Gas
Norris RG 14-40	43-015-30324	Producing	Federal	
Peacock 07-64	43-015-30327	Producing	Federal	
Peacock P&K 08-62	43-015-30320	Producing	Federal	
Peacock Trust 08-61	43-015-30326	Producing	Federal	
Peacock Trust 08-63	43-015-30328	Producing	Federal	
Peacock Trust 09-60	43-015-30321	Producing	Federal	
State of Utah 01-97	43-015-30498	Producing	State	
State of Utah 17-7-36-33R	43-015-30687	Producing	State	
State of Utah 17-8-19-11D	43-015-30695	P&A	State	
State of Utah 18-7-2-33R	43-015-30674	Producing	State	
State of Utah DD 31-98	43-015-30439	Producing	State	
~~State of Utah II 36-95~~	~~43-015-30509~~	Producing	State	
~~State of Utah II 36-96~~	~~43-015-30508~~	P&A	State	
State of Utah U 02-11	43-015-30270	Producing	State	
State of Utah U 02-48	43-015-30306	Producing	State	
State of Utah U 02-49	43-015-30309	P&A	State	
State of Utah U 02-50	43-015-30308	Producing	State	
State of Utah X 16-65	43-015-30312	Shut In	State	
State of Utah X 16-66	43-015-30311	Producing	State	
UP&L 14-53	43-015-30313	Producing	State	
UP&L 14-55	43-015-30314	Producing	Federal	
UP&L 23-51	43-015-30315	Producing	Federal	
UP&L 24-57	43-015-30316	Producing	State	
USA 03-74	43-015-30383	Producing	Federal	

Utah Wells Surface Commingled at Orangeville CDP				
USA 03-75	43-015-30384	Producing	Federal	
USA 11-72	43-015-30387	Producing	Federal	
USA 18-7-11-23	43-015-30640	Producing	State	
USA 34-80	43-015-30389	Shut In	Federal	
USA 34-82	43-015-30390	Producing	Federal	
Utah Federal 17-7-35-42	43-015-30641	Drilling	Federal	
Utah Federal 18-7-27-44R	43-015-30628	Producing	Federal	
Utah Federal 18-7-9-11	43-015-30639	Producing	Federal	
Utah Federal D 34-12	43-015-30282	Producing	Federal	
Utah Federal D 35-13	43-015-30285	Producing	Federal	
Utah Federal D 35-14	43-015-30286	Producing	Federal	
Utah Federal D 35-15	43-015-30287	Producing	Federal	
Utah Federal H 06-21	43-015-30294	TA	Federal	
Utah Federal P 10-42	43-015-30276	Producing	Federal	
Utah Federal P 10-43	43-015-30277	Producing	Federal	
Utah Federal P 10-47	43-015-30258	Producing	Federal	
Utah Federal Q 04-44	43-015-30280	Producing	Federal	
Utah Federal R 09-45	43-015-30275	Producing	Federal	
Utah Federal S 08-46	43-015-30274	Producing	Federal	
Utah State 01-76	43-015-30381	Producing	State	
Utah State 36-78	43-015-30382	Producing	State	

BUZZARD BENCH /UTAH PRODUCTION

MONTHLY GAS PRODUCTION

Apr-05

...gton Wells	WELL No.	Days On	MONTHLY WATER PRODUCTION	FIELD ESTIMATED PRODUCTION: Coastal Statement	PROD %	FIELD EST PROD	m Gas	Lse Use Gas	Vented CO2	Vented Gas	VENTED GAS	ADJ (3)	FIELD ESTIMATED SALES	ACTUAL ALLOCATED SALES: ALLOCATED SALES	Lse Use Gas (m)	Vented CO2	Vented Gas	VENTED GAS	ADJ (3)	FIELD PRODUCTION
						a	b	c			E	b-c+d	31	g					h	i
	10-01	30	435	1476	0.00488716	1479	45	36	98		98	179	1299	1246	81	98		98	179	1425
	T36-10	30	2667	18292	0.06048442	18298	45	447	1708		1708	2200	16095	15424	492	1708		1708	2200	17624
	M06-25	30	723	16969	0.05610978	16975	45	414	2280		2280	2739	14236	14308	459	2280		2280	2739	17047
	H06-21	0	0	0	0	0	0	0	0		0	0	0	0	0	0		0	0	0
	07-106	30	879	5052	0.01673803	5064	45	124	789		789	958	4106	4268	169	789		789	958	5226
	09-119	30	185	726	0.0024005	726	45	18	108		108	171	555	612	53	108		108	171	783
	10-124	30	129	951	0.00314458	951	45	23	38		38	106	845	902	68	38		38	106	908
	06-102	30	823	20112	0.06650244	20119	45	491	2219		2219	2755	17364	16959	536	2219		2219	2755	19714
	06-104	30	869	12922	0.04272795	12926	45	315	2156		2156	2516	10410	10895	350	2156		2156	2516	13412
	09-118	30	163	797	0.00263536	797	45	19	100		100	164	633	672	64	100		100	164	836
...T AL	09-120	30	214	899	0.00297264	899	45	22	80		80	147	752	758	67	80		80	147	905
...B	18-7-23-23	0	0	0	0	0	0	0	0		0	0	0	0	0	0		0	0	0
	17-8-15-33	0	0	0	0	0	0	0	0		0	0	0	0	0	0		0	0	0
	10-123	30	261	1348	0.0044573	1348	45	33	89		89	167	1182	1137	78	89		89	167	1304
...C	10-125	30	266	536	0.00177234	538	45	13	32		32	90	446	452	58	32		32	90	542
...F	11-129	29	0	396	0.00130942	396	44	10	16		16	69	327	334	53	16		16	69	403
...F	11-130	30	1847	162	0.00053557	162	45	4	7		7	56	106	137	49	7		7	56	193
...F	16-121	30	276	757	0.0025031	757	45	18	42		42	105	652	638	53	42		42	105	743
...TRUST ET AL	05-107	29	242	8230	0.02721336	8233	44	201	1397		1397	1641	6591	6940	244	1397		1397	1641	8581
...B	05-108	30	611	4934	0.01631479	4936	45	120	830		830	995	3940	4160	165	830		830	995	5155
...B	05-109	30	113	1252	0.00413987	1252	45	31	133		133	209	1044	1056	76	133		133	209	1265
...B	05-110	30	31	1462	0.00483426	1463	45	36	194		194	275	1188	1233	81	194		194	275	1508
	06-103	30	946	9133	0.03019922	9136	45	223	1241		1241	1509	7627	7701	268	1241		1241	1509	9210
...VEST GROUP ET AL	15-126	0	0	0	0	0	0	0	0		0	0	0	0	0	0		0	0	0
...ARD ET AL	15-127	30	1462	3530	0.01167232	3531	45	86	226		226	357	3174	2977	131	226		226	357	3334
	08-111	29	143	1513	0.00500289	1514	44	37	203		203	283	1230	1276	80	203		203	283	1559
	08-112	30	118	1326	0.00438456	1326	45	32	143		143	220	1106	1118	77	143		143	220	1338
	08-113	30	0	756	0.00249979	756	45	18	108		108	171	585	637	63	108		108	171	808
...BB	07-105	30	909	6760	0.02235265	6762	45	165	1197		1197	1407	5355	5700	210	1197		1197	1407	7107
...A	03-122	30	0	456	0.00150781	456	45	11	30		30	86	370	385	56	30		30	86	471
...GG	03-133	30	102	331	0.00109449	331	45	8	18		18	71	260	279	53	18		18	71	350
...HH	09-117	30	37	946	0.00312805	946	45	23	136		136	204	742	798	68	136		136	204	1002
...ARMS	04-116	30	114	603	0.00199388	603	45	15	63		63	123	480	508	60	63		63	123	631
...BB	04-115	30	258	1186	0.00392163	1186	45	29	130		130	204	982	1000	74	130		130	204	1204
...GG	T36-100	30	3714	34839	0.11519881	34851	45	851	5000		5000	5896	28955	29376	896	5000		5000	5896	35272
	01-140	30	1506	4065	0.01344135	4086	45	99	462		462	606	3460	3428	144	462		462	606	4034
	01-101	30	1199	24478	0.08093908	24486	45	598	2937		2937	3580	20907	20640	643	2937		2937	3580	24220
...SS	22-165	30	1690	4630	0.01530958	4632	45	113	162		162	320	4312	3904	158	162		162	320	4224
...D (RIG SKID)	35-135R	30	4133	1501	0.00496321	1502	0	37	142		142	179	1323	1266	37	142		142	179	1445
	14-171	30	3033	4645	0.01535918	4647	45	113	163		163	321	4325	3917	158	163		163	321	4238
	36-139	30	734	9013	0.02980243	9016	45	220	1062		1062	1327	7689	7600	265	1062		1062	1327	8927
...FO	02-186	30	193	575	0.0019013	575	45	14	42		42	101	474	485	59	42		42	101	586
	36-138	30	555	5299	0.0175217	5301	45	129	396		396	570	4730	4468	174	396		396	570	5038
...CC	03-161	30	61	558	0.00184509	558	45	14	48		48	107	452	471	59	48		48	107	578
...FO	02-188	30	176	923	0.003052	923	45	23	45		45	113	811	778	68	45		45	113	891
	14-131	30	793	1957	0.00650409	1968	45	46	71		71	164	1804	1659	93	71		71	164	1823
...K	01-141	30	59	2208	0.00730098	2209	45	54	283		283	382	1827	1862	99	283		283	382	2244
...KK	32-144	30	3738	31387	0.10378441	31398	45	766	5540		5540	6351	25047	26466	811	5540		5540	6351	32817
...AA"	07-146	30	672	2760	0.00912623	2761	0	67	538		538	605	2156	2327	57	538		538	605	2932
	35-137	30	1356	11613	0.0383996	11617	0	284	1276		1276	1560	10057	9792	284	1276		1276	1560	11352
...D	01-205D	30	4123	2659	0.00879226	2660	0	65	257		257	322	2338	2242	65	257		257	322	2564
...Q	31-201	30	1581	35460	0.11731834	35492	0	866	4755		4755	5621	29871	29917	866	4755		4755	5621	35538
...QQ																				
			40726	302425	1	302529	1930.5	7383	38990		38990	48303.5	254225.5	255009	9312	38990		38990	48302	303311
											BTU	1.04	SALES MTR	255006						

Apr 05

		Days On	MONTHLY WATER PRODUCTION	FIELD ESTIMATED PRODUCTION: Costal Statement	PROD %	FIELD EST PROD	Irr Gas	Lse Use Gas	Vented Gas	Vented Gas	VENTED GAS	ADJ (1)	FIELD ESTIMATED SALES	ACTUAL ALLOCATED SALES: ALLOCATED SALES	Lse Use Gas (1)	Vented CO2	Vented Gas	TOTAL VENTED	TOTAL ADJ (1)	FIELD PRODUCTION
	B21-03	0	0	0	0		0	0	0		0	0	0	0	0	0		0	0	0
	A26-02	26	88	490	0.00165775	490	39	13	15		15	671	423	432	52	15		15	67	499
	C23-08	30	3432	9140	0.00092205	9,140	45	236	437		437	718	8,422	8,062	281	437		437	718	8,780
	A26-04	15	0	68	0.00023005	68	23	2	2		2	26	42	60	24	2		2	26	86
	A35-06	30	121	29098	0.09844307	29,098	45	750	1,706		1,706	2,501	26,597	25,665	795	1,706		1,706	2,501	28,166
	A35-05	18	700	289	0.00097773	289	27	7	7		7	41	248	255	34	7		7	41	296
	A34-07	30	2845	5383	0.01821153	5,383	45	139	361		361	545	4,838	4,748	184	361		361	545	5,293
	P10-47	30	734	139	0.00047025	139	210	4	6		6	220	-81	123	214	6		6	220	343
	A27-09	0	0	0	0	0	0	0	0		0	0	0	0	0	0		0	0	0
IAME PROB	U02-11	30	5021	15291	0.05173184	15,291	45	304	1,255		1,255	1,694	13,597	13,487	439	1,255		1,255	1,694	15,181
	S08-46	29	11	519	0.00175586	519	203	13	230		230	446	73	458	216	230		230	446	904
	R09-45	30	36	444	0.00150212	444	210	11	102		102	323	121	392	221	102		102	323	715
	P10-42	29	7809	819	0.0027708	819	44	21	144		144	209	610	722	65	144		144	209	931
	P10-43	30	3050	605	0.00204681	605	45	16	61		61	122	483	534	61	61		61	122	658
	Q04-44	16	5442	71	0.0002402	71	112	2	11		11	125	-54	63	114	11		11	125	188
	D34-12	24	2583	1471	0.00497662	1,471	36	38	126		126	200	1,271	1,297	74	126		126	200	1,497
	D35-13	30	1421101	896	0.00303131	896	45	23	349		349	417	479	790	68	349		349	417	1,207
	D35-14	24	647	293	0.00099126	293	36	8	57		57	101	192	258	44	57		57	101	359
	D35-15	30	1830	20903	0.07071811	20,903	45	539	1,326		1,326	1,910	18,993	18,436	584	1,326		1,326	1,910	20,346
	H06-21	0	0	0	0	0	0	0	0		0	0	0	0	0	0		0	0	
	U02-48	26	7527	2310	0.00781509	2,310	42	60	148		148	250	2,060	2,037	102	148		148	250	2,287
	U02-50	30	706	2703	0.00914467	2,703	45	70	165		165	280	2,423	2,384	115	165		165	280	2,664
	U02-49	15	173	347	0.00117396	347	23	9	18		18	49	298	306	31	18		18	49	355
	10-58	0	0	0	0	0	0	0	0		0	0	0	0	0	0		0	0	0
	X16-66	28	307	290	0.00098112	290	42	7	38		38	87	203	256	49	38		38	87	343
	X16-65	0	0	0	0	0	0	0	0		0	0	0	0	0	0		0	0	0
	14-53	30	298	827	0.00279787	827	45	21	50		50	116	711	729	66	50		50	116	845
	14-55	30	9023	65522	0.41965343	124,042	90	3,196	7,739		7,739	11,025	113,017	109,405	3,266	7,739		7,739	11,025	120,430
	14-55A	30		58520					0				0							
	23-51	30	175	269	0.00091007	269	45	7	9		9	61	208	237	52	9		9	61	298
	24-57	30	254	581	0.00230393	581	45	18	22		22	85	596	601	63	22		22	85	686
	15-68	0	0	0	0	0	0	0	0		0	0	0	0	0	0		0	0	0
	14-54	0	0	0	0	0	0	0	0		0	0	0	0	0	0		0	0	0
CK	08-62	29	23	491	0.00166113	491	44	13	179		179	235	256	433	56	179		179	235	668
RUST	09-60	29	1445	1074	0.00363351	1,074	44	28	294		294	365	709	947	71	294		294	365	1,312
	14-40	30	4320	2701	0.0091379	2,701	45	70	154		154	269	2,432	2,382	115	154		154	269	2,851
S	15-67	26	1202	261	0.000883	261	39	7	14		14	60	201	230	46	14		14	60	290
RUST	08-61	30	478	9427	0.03189301	9,427	45	243	528		528	816	8,611	8,315	288	528		528	816	9,131
	07-64	30	1092	1657	0.00560589	1,657	45	43	495		495	583	1,074	1,461	88	495		495	583	2,044
RUST	08-63	30	264	1654	0.00559574	1,654	45	43	777		777	865	789	1,459	88	777		777	865	2,324
	09-59	0	0	0	0	0	0	0	0		0	0	0	0	0	0		0	0	0
	01-76	30	3108	4980	0.01684812	4,980	45	128	326		326	499	4,481	4,392	173	326		326	499	4,891
	36-78	30	903	5802	0.01962907	5,802	45	150	380		380	575	5,227	5,117	195	380		380	575	5,692
	03-74	27	24620	1325	0.00448268	1,325	41	34	30		30	105	1,220	1,169	75	30		30	105	1,274
	03-75	30	5879	4396	0.01487235	4,396	45	113	299		299	457	3,939	3,877	158	299		299	457	4,334
	11-72	30	45297	922	0.00311927	922	45	24	177		177	246	676	813	69	177		177	246	1,059
	34-80	15	44	113	0.0003823	113	24	3	21		21	48	65	100	27	21		21	48	148
	34-82	0	0	0	0	0	0	0	0		0	0	0	0	0	0		0	0	0
)	31-98	30	10	1482	0.00501384	1,482	45	38	133		133	216	1,266	1,307	83	133		133	216	1,523
	A35-89	30	9902	34803	0.11774398	34,803	45	897	2,021		2,021	2,963	31,840	30,696	942	2,021		2,021	2,963	33,659
	P03-92	30	1184	886	0.00299748	886	45	23	89		89	157	729	781	68	89		89	157	936
	P03-93	28	9434	646	0.00218552	646	42	17	96		96	155	491	570	59	96		96	155	725
	T22-69	30	3201	1130	0.00382297	1,130	45	29	58		58	132	998	997	74	58		58	132	1,129
	T27-87	30	574	546	0.0018472	546	45	14	27		27	86	460	482	59	27		27	86	568
	01-97	30	0	1194	0.00403949	1,194	0	31	73		73	104	1,090	1,053	31	73		73	104	1,157
	36-96	30	61	470	0.00159008	470	0	12	49		49	61	409	415	12	49		49	61	476
	36-95	30	1503	1260	0.00426278	1,260	0	32	130		130	162	1,098	1,111	32	130		130	162	1,273
MERRON GAS WELLS													0							
hammer		29	10537	481	0.0016273	481	0	12	15	0	15	27	454	424	12	15		15	27	451
al	4 - 36 - 18 - 7	30	985	493	0.0016679	493	0	0	28	0	28	28	465	435	0	28		28	28	463
			353007	295582	1	295,582	2,428	7,804	20,777		20,777	30,529	264,753	260,703	10,043	20,777		20,777	30,832	291,535
IPELINE		7									BTU	1.02	SALES MTR	260704				SALES LESS MERRION WELLS		259,844

LE WELLS FROM COASTAL STATEMENT		0	[redacted]																	
		20777	[redacted]							SALES DIFFERENCE										
		0	[redacted]																	
		7604	[redacted]				7604	0												
		2448	[redacted]		2448															
		0	[redacted]		0															
ld statement + memon	0	974	[redacted]																	
		31803	[redacted]	295682	2448	7604	0													
	395211	597033		597137	4379	14975	69724	[redacted]	59724	790771	518060	514853	19355	59724	[redacted]	59724	79079	593932		

REC'D / SAN JUAN

OCT 1 2 2004

FORM 9

STATE OF UTAH
DEPARTMENT OF NATURAL RESOURCES
DIVISION OF OIL, GAS AND MINING

5. LEASE DESIGNATION AND SERIAL NUMBER: Various Leases

SUNDRY NOTICES AND REPORTS ON WELLS

6. IF INDIAN, ALLOTTEE OR TRIBE NAME:

7. UNIT or CA AGREEMENT NAME:

Do not use this form for proposals to drill new wells, significantly deepen existing wells below current bottom-hole depth, reenter plugged wells, or to drill horizontal laterals. Use APPLICATION FOR PERMIT TO DRILL form for such proposals.

1. TYPE OF WELL: OIL WELL ☐ GAS WELL ☑ OTHER

8. WELL NAME and NUMBER: See attached list

2. NAME OF OPERATOR: XTO ENERGY INC. N2615

9. API NUMBER: Multiple

3. ADDRESS OF OPERATOR: 2700 Farmington Bldg K,Sui CITY Farmington STATE NM ZIP 87401

PHONE NUMBER: (505) 324-1090

10. FIELD AND POOL, OR WILDCAT: Buzzard Bench

4. LOCATION OF WELL

FOOTAGES AT SURFACE:

COUNTY: Emery

QTR/QTR, SECTION, TOWNSHIP, RANGE, MERIDIAN:

STATE: UTAH

11. CHECK APPROPRIATE BOXES TO INDICATE NATURE OF NOTICE, REPORT, OR OTHER DATA

TYPE OF SUBMISSION	TYPE OF ACTION		
☐ NOTICE OF INTENT (Submit in Duplicate)	☐ ACIDIZE	☐ DEEPEN	☐ REPERFORATE CURRENT FORMATION
Approximate date work will start:	☐ ALTER CASING	☐ FRACTURE TREAT	☐ SIDETRACK TO REPAIR WELL
	☐ CASING REPAIR	☐ NEW CONSTRUCTION	☐ TEMPORARILY ABANDON
	☐ CHANGE TO PREVIOUS PLANS	☑ OPERATOR CHANGE	☐ TUBING REPAIR
	☐ CHANGE TUBING	☐ PLUG AND ABANDON	☐ VENT OR FLARE
☑ SUBSEQUENT REPORT (Submit Original Form Only)	☐ CHANGE WELL NAME	☐ PLUG BACK	☐ WATER DISPOSAL
Date of work completion:	☐ CHANGE WELL STATUS	☐ PRODUCTION (START/RESUME)	☐ WATER SHUT-OFF
	☐ COMMINGLE PRODUCING FORMATIONS	☐ RECLAMATION OF WELL SITE	☐ OTHER:
	☐ CONVERT WELL TYPE	☐ RECOMPLETE - DIFFERENT FORMATION	

12. DESCRIBE PROPOSED OR COMPLETED OPERATIONS. Clearly show all pertinent details including dates, depths, volumes, etc.

Effective August 1,2004, the operator changed from Chevron U.S.A. Inc. to XTO ENERGY INC. for all wells on the attached list.

BLM #579173

State and Fee Bond #104312762

RECEIVED
MAY 1 8 2007
DIV. OF OIL, GAS & MINING

Kenneth W. Jackson Regulatory Specialist ChevronTexaco for Chevron U.S.A. Inc. N0210

NAME (PLEASE PRINT) James L. Deatt TITLE Vice President-Land

SIGNATURE James L. Deatt DATE 8/16/04

(This space for State use only)

APPROVED 9/30/2004
Earlene Russell
Division of Oil, Gas and Mining
Earlene Russell, Engineering Technician

(See Instructions on Reverse Side)

(5/2000)

RECEIVED
SEP 2 8 2004
DIV. OF OIL, GAS & MINING

FORM 9

STATE OF UTAH
DEPARTMENT OF NATURAL RESOURCES
DIVISION OF OIL, GAS AND MINING

5. LEASE DESIGNATION AND SERIAL NUMBER: UTU-67532

SUNDRY NOTICES AND REPORTS ON WELLS

6. IF INDIAN, ALLOTTEE OR TRIBE NAME:

7. UNIT or CA AGREEMENT NAME:

Do not use this form for proposals to drill new wells, significantly deepen existing wells below current bottom-hole depth, reenter plugged wells, or to drill horizontal laterals. Use APPLICATION FOR PERMIT TO DRILL form for such proposals.

1. TYPE OF WELL: OIL WELL ☐ GAS WELL ☑ OTHER CONFIDENTIAL

8. WELL NAME and NUMBER: FEDERAL A 18-7-26 #12

2. NAME OF OPERATOR: XTO ENERGY INC.

9. API NUMBER: 4301530445

3. ADDRESS OF OPERATOR: 2700 Farmington Ave. Bldg K CITY Farmington STATE NM ZIP 87401 PHONE NUMBER: (505) 324-1090

10. FIELD AND POOL, OR WILDCAT: BUZZARD BENCH ABO

4. LOCATION OF WELL
FOOTAGES AT SURFACE: 1815' FNL & 897' FWL COUNTY: EMERY
QTR/QTR, SECTION, TOWNSHIP, RANGE, MERIDIAN: SWNW 26 18S 07E STATE: UTAH

11. CHECK APPROPRIATE BOXES TO INDICATE NATURE OF NOTICE, REPORT, OR OTHER DATA

TYPE OF SUBMISSION	TYPE OF ACTION		
☑ NOTICE OF INTENT (Submit in Duplicate)	☐ ACIDIZE	☐ DEEPEN	☐ REPERFORATE CURRENT FORMATION
Approximate date work will start:	☐ ALTER CASING	☐ FRACTURE TREAT	☐ SIDETRACK TO REPAIR WELL
	☐ CASING REPAIR	☐ NEW CONSTRUCTION	☐ TEMPORARILY ABANDON
	☐ CHANGE TO PREVIOUS PLANS	☐ OPERATOR CHANGE	☐ TUBING REPAIR
	☐ CHANGE TUBING	☐ PLUG AND ABANDON	☐ VENT OR FLARE
☐ SUBSEQUENT REPORT (Submit Original Form Only)	☐ CHANGE WELL NAME	☐ PLUG BACK	☐ WATER DISPOSAL
Date of work completion:	☐ CHANGE WELL STATUS	☐ PRODUCTION (START/RESUME)	☐ WATER SHUT-OFF
	☐ COMMINGLE PRODUCING FORMATIONS	☐ RECLAMATION OF WELL SITE	☑ OTHER: SURFACE COMMINGLE
	☐ CONVERT WELL TYPE	☐ RECOMPLETE - DIFFERENT FORMATION	

12. DESCRIBE PROPOSED OR COMPLETED OPERATIONS. Clearly show all pertinent details including dates, depths, volumes, etc.

XTO Energy Inc. proposes to surface commingle the following two wells into our Orangeville CDP:

Federal A 18-7-26 #12; Sec 26-T18S-R07E; 1815' FNL & 897' FWL; 43-015-30445; UTU-67532; Buzzard Bench
Federal T 18-7-22 #34; Sec 22-T18S-R07E; 539' FSL & 1831' FEL; 43-015-30452; UTU-68535; Buzzard Bench

Both of these wells have their own wellhead allocation meter. Both wells will have the sales point or custody transfer at the Orangeville System.

COPY SENT TO OPERATOR
Date: 7-11-05
Initials: CHD

NAME (PLEASE PRINT) HOLLY C. PERKINS TITLE REGULATORY COMPLIANCE TECH

SIGNATURE Holly C. Perkins DATE 6/23/2005

(This space for State use only)

Accepted by the Utah Division of Oil, Gas and Mining

Federal Approval Of This Action Is Necessary

Date: 7/8/05

By: Dustin Ducet

Dustin Ducet ??

(See instructions on Reverse Side)

RECEIVED
JUN 29 2005
DIV. OF OIL, GAS & MINING

(5/2000)

N WELLS FROM COASTAL STATEMENT	0	[redacted]	302425			
	38990	[redacted]				
	104	[redacted]	104			
s Check #	256029	[redacted]				
s Check #2	0	[redacted]				
	0	[redacted]			0	
	7383	[redacted]			7383	0
	1931	[redacted]		1930.5		
	0	[redacted]				
	304437	[redacted]	302529	1930.5	7383	0

STATE OF UTAH
DEPARTMENT OF NATURAL RESOURCES
DIVISION OF OIL, GAS AND MINING

FORM 9

SUNDRY NOTICES AND REPORTS ON WELLS

Do not use this form for proposals to drill new wells, significantly deepen existing wells below current bottom-hole depth, reenter plugged wells, or to drill horizontal laterals. Use APPLICATION FOR PERMIT TO DRILL form for such proposals.

5. LEASE DESIGNATION AND SERIAL NUMBER:

6. IF INDIAN, ALLOTTEE OR TRIBE NAME:

7. UNIT or CA AGREEMENT NAME:

1. TYPE OF WELL: OIL WELL ☐ GAS WELL ☑ OTHER

8. WELL NAME and NUMBER: ~~MULTI~~ Lions Fed 35-137

2. NAME OF OPERATOR: XTO ENERGY INC.

9. API NUMBER: ~~MULTIPLE~~ 43 015 30587

3. ADDRESS OF OPERATOR: 382 CR 3100 CITY AZTEC STATE NM ZIP 87410

PHONE NUMBER: (505) 333-3100

10. FIELD AND POOL, OR WILDCAT:

4. LOCATION OF WELL

FOOTAGES AT SURFACE: MULTIPLE

COUNTY: EMERY

QTR/QTR, SECTION, TOWNSHIP, RANGE, MERIDIAN:

STATE: UTAH

11. CHECK APPROPRIATE BOXES TO INDICATE NATURE OF NOTICE, REPORT, OR OTHER DATA

TYPE OF SUBMISSION	TYPE OF ACTION		
☐ NOTICE OF INTENT (Submit in Duplicate)	☐ ACIDIZE	☐ DEEPEN	☐ REPERFORATE CURRENT FORMATION
Approximate date work will start:	☐ ALTER CASING	☐ FRACTURE TREAT	☐ SIDETRACK TO REPAIR WELL
	☐ CASING REPAIR	☐ NEW CONSTRUCTION	☐ TEMPORARILY ABANDON
	☐ CHANGE TO PREVIOUS PLANS	☐ OPERATOR CHANGE	☐ TUBING REPAIR
	☐ CHANGE TUBING	☐ PLUG AND ABANDON	☐ VENT OR FLARE
☑ SUBSEQUENT REPORT (Submit Original Form Only)	☐ CHANGE WELL NAME	☐ PLUG BACK	☐ WATER DISPOSAL
Date of work completion:	☐ CHANGE WELL STATUS	☐ PRODUCTION (START/RESUME)	☐ WATER SHUT-OFF
	☐ COMMINGLE PRODUCING FORMATIONS	☐ RECLAMATION OF WELL SITE	☑ OTHER: SURFACE COMMINGLE
	☐ CONVERT WELL TYPE	☐ RECOMPLETE - DIFFERENT FORMATION	

12. DESCRIBE PROPOSED OR COMPLETED OPERATIONS. Clearly show all pertinent details including dates, depths, volumes, etc.

XTO Energy Inc. applied for surface commingle on the attached list of wells on 7/5/07 and State of UT DOGM approval was received on 7/13/07. Due to the rejection of the Federal application, XTO would like to withdraw the commingling application and subsequent work will not be done.

NAME (PLEASE PRINT) LORRI D. BINGHAM

TITLE REGULATORY COMPLIANCE TECH

SIGNATURE Lorri D. Bingham

DATE 9/23/2008

(This space for State use only)

RECEIVED
SEP 29 2008
DIV. OF OIL, GAS & MINING

(5/2000)

(See Instructions on Reverse Side)

Utah Wells Surface Commingled at Huntington CDP			
State of Utah FO 02-186	43-015-30533	Producing	State
State of Utah FO 02-188	43-015-30553	Producing	State
State of Utah GG 03-122	43-015-30499	Producing	State
State of Utah GG 04-115	43-015-30504	Producing	State
State of Utah HH 03-133	43-015-30500	Producing	State
State of Utah KK 32-144	43-015-30567	Producing	State
State of Utah QQ 31-201	43-015-30592	Producing	State
State of Utah SS 22-165	43-015-30520	Producing	State
State of Utah T 36-10	43-015-30268	Producing	State
State of Utah T 36-100	43-015-30506	Producing	State
UP&L 06-102	43-015-30441	Producing	State
UP&L 06-103	43-015-30483	Producing	State
UP&L 06-104	43-015-30442	Producing	State
UP&L Federal 01-101	43-015-30511	Producing	Federal
Utah Federal 01-205D	43-015-30589	Producing	Federal
Utah Federal 16-7-35-21	43-015-30602	Producing	Federal
Utah Federal 16-7-35-32	43-015-30603	Producing	Federal
Utah Federal 17-7-12-22D	43-015-30605	Producing	Federal
Utah Federal 17-7-12-24D	43-015-30604	Producing	Federal
Utah Federal 17-7-12-42	43-015-30591	Producing	Federal
Utah Federal 17-7-12-43	43-015-30601	Producing	Federal
Utah Federal 17-7-3-41D	43-015-30697	Producing	Federal
Utah Federal KK 01-140	43-015-30507	Producing	Federal
Utah Federal KK 01-141	43-015-30559	Producing	Federal
Utah Federal M 06-25	43-015-30292	Producing	Federal
WH Leonard 15-127	43-015-30485	Producing	State
Wm S Ivie 09-118	43-015-30443	Producing	State
Zion's Federal 35-135R	43-015-30521	Producing	Federal
Zion's Federal 17-7-2-11	43-015-30590	Producing	Federal
Zion's Federal 35-137	43-015-30587	Producing	Federal

RECEIVED
SEP 29 2003
DIV. OF OIL, GAS & MINING