FIML NATURAL RESOURCES, LLC

September 21, 2006

Utah Division of Oil, Gas and Mining
1594 West North Temple, Suite 1210
P. O. Box 145801
Salt Lake City, UT 84114-5801

Attn.: Ms. Diana Whitney

RE: Exception Letter for the Ute Tribal #7-18-55
1,771' FNL & 1,942' FEL of Section 18 T-5S R-5W
Duchesne County, Utah

Dear Ms. Whitney:

FIML Natural Resources, LLC has no objection to the proposed Ute Tribal #7-18-55 well being drilled **1,771'** FNL & 1,942' FEL of Section 18 T-5S R-5W. The original "legal" drillsite location was moved due to severe topographic conditions. Moreover, the Ute Tribal representatives would not allow the drillsite to be placed at the legal location due to the severe topographic constraints.

FIML Natural Resources, LLC is the only owner within a 460 foot radius of the proposed well location.

The signature below is our written waiver of objection to UT Administrative Code R649-3-3.

Signature: _____

Name: Mark D. Bingham

Title: Senior Vice President

Date: September 21, 2006

FIML Natural Resources, LLC
410 17th Street, 9th Floor
Denver, CO 80202

RECEIVED
SEP 2 5 2006
DIV. OF OIL, GAS & MINING

SELF CERTIFICATION STATEMENT

The following self-certification statement is provided per federal requirements dated June 15, 1988.

Please be advised that FIML Natural Resources, LLC is considered to be the operator of the following well.

Ute Tribal 7-18-55
SW/4 NE/4 1,771' FNL 1,942' FEL, Section 18 T-5S, R-5W U.S.B. & M.
Lease BIA: #14-20-H62-5057
Duchesne County, Utah

FIML Natural Resources, LLC is responsible under the terms of this lease for the operations conducted upon lease lands.

Rick L. Parks
Operations Manager
FIML Natural Resources, LLC
410 17th Street
Suite 900
Denver, Colorado 80202
(303) 893-5081

FIML NATURAL RESOURCES, LLC

September 22, 2006

Utah Division of Oil, Gas and Mining
1594 West North Temple, Suite 1210
P. O. Box 145801
Salt Lake City, UT 84114-5801

Attn.: Ms. Diana Whitney

RE:

Ute Tribal #7-18-55 SWNE Sec 18 T5S R5W Wildcat Field Duchesne County, Utah	Ute Tribal #9-18-55 NESE Sec 18 T5S R5W Wildcat Field Duchesne County, Utah
Ute Tribal #10-18-55 NWSE Sec 18 T5S R5W Wildcat Field Duchesne County, Utah	Ute Tribal #12-18-55 NWSW Sec 18 T5S R5W Wildcat Field Duchesne County, Utah

Dear Ms. Whitney:

Enclosed is one application to drill, and exception location letters (when needed) concerning the referenced proposed wells. This information will be delivered to the Bureau of Land Management on September 26, 2006.

FIML (FNR) Natural Resources, LLC is requesting the Utah Division of Oil, Gas and Mining to hold this application and all future information as confidential.

If any questions arise or need additional information is required, please contact the undersigned at 303-893-5090.

Sincerely,

Cassandra Parks by JEM

Cassandra Parks
Operations Assistant

/cp
Enclosures:

RECEIVED
SEP 25 2006
DIV. OF OIL, GAS & MINING

410 17th Street, Suite 900 * Denver, CO 80202 * (303)893-5073 * Facsimile (303) 573-0386

Form 3160-3
(April 2004)

FORM APPROVED
OMB No. 1004-0137
Expires March 31, 2007

UNITED STATES
DEPARTMENT OF THE INTERIOR
BUREAU OF LAND MANAGEMENT

APPLICATION FOR PERMIT TO DRILL OR REENTER

5. Lease Serial No.
14-20-H62-5057

6. If Indian, Allotee or Tribe Name
Ute Indian Tribe

7. If Unit or CA Agreement, Name and No.

8. Lease Name and Well No.
Ute Tribal 7-18-55

9. API Well No.
43-013-33348

1a. Type of work: ☑ DRILL ☐ REENTER

1b. Type of Well: ☑ Oil Well ☐ Gas Well ☐ Other ☐ Single Zone ☑ Multiple Zone

2. Name of Operator
FIML Natural Resources, LLC

3a. Address
410 17th Street, 9th Floor, Denver, CO 80202

3b. Phone No. *(include area code)*
303-893-5073

10. Field and Pool, or Exploratory
Undesignated

4. Location of Well *(Report location clearly and in accordance with any State requirements.*)*
At surface **SWNE 1771' FNL 1,942' FEL** 543750X 40.048953
At proposed prod. zone **Same as above** 4433106Y -110.487115

11. Sec., T. R. M. or Blk. and Survey or Area
Sec 18, T5S-R5W, U.S.B.&M.

14. Distance in miles and direction from nearest town or post office*
36 miles southwest of Myton, Utah

12. County or Parish
Duchesne

13. State
Utah

15. Distance from proposed* location to nearest property or lease line, ft. (Also to nearest drig. unit line, if any) **1,771'**

16. No. of acres in lease
640

17. Spacing Unit dedicated to this well
40

18. Distance from proposed location* to nearest well, drilling, completed, applied for, on this lease, ft. **1,524'**

19. Proposed Depth
6,500'

20. BLM/BIA Bond No. on file
8191-82-71

21. Elevations (Show whether DF, KDB, RT, GL, etc.)
7,423' GL (Ungraded)

22. Approximate date work will start*
04/15/2007

23. Estimated duration
Seven days

24. Attachments

The following, completed in accordance with the requirements of Onshore Oil and Gas Order No.1, shall be attached to this form:

1. Well plat certified by a registered surveyor.
2. A Drilling Plan.
3. A Surface Use Plan (if the location is on National Forest System Lands, the SUPO shall be filed with the appropriate Forest Service Office).
4. Bond to cover the operations unless covered by an existing bond on file (see Item 20 above).
5. Operator certification
6. Such other site specific information and/or plans as may be required by the authorized officer.

25. Signature
Name *(Printed/Typed)* **Mark Bingham**
Date **09/21/2006**

Title
Senior Vice President

Approved by *(Signature)*
Name *(Printed/Typed)* BRADLEY G. HILL
Date 09-26-06

Title
Office ENVIRONMENTAL MANAGER

Application approval does not warrant or certify that the applicant holds legal or equitable title to those rights in the subject lease which would entitle the applicant to conduct operations thereon.
Conditions of approval, if any, are attached.

Title 18 U.S.C. Section 1001 and Title 43 U.S.C. Section 1212, make it a crime for any person knowingly and willfully to make to any department or agency of the United States any false, fictitious or fraudulent statements or representations as to any matter within its jurisdiction.

**(Instructions on page 2)*

RECEIVED
SEP 25 2006
DIV. OF OIL, GAS & MINING

Federal Approval of this Action Is Necessary

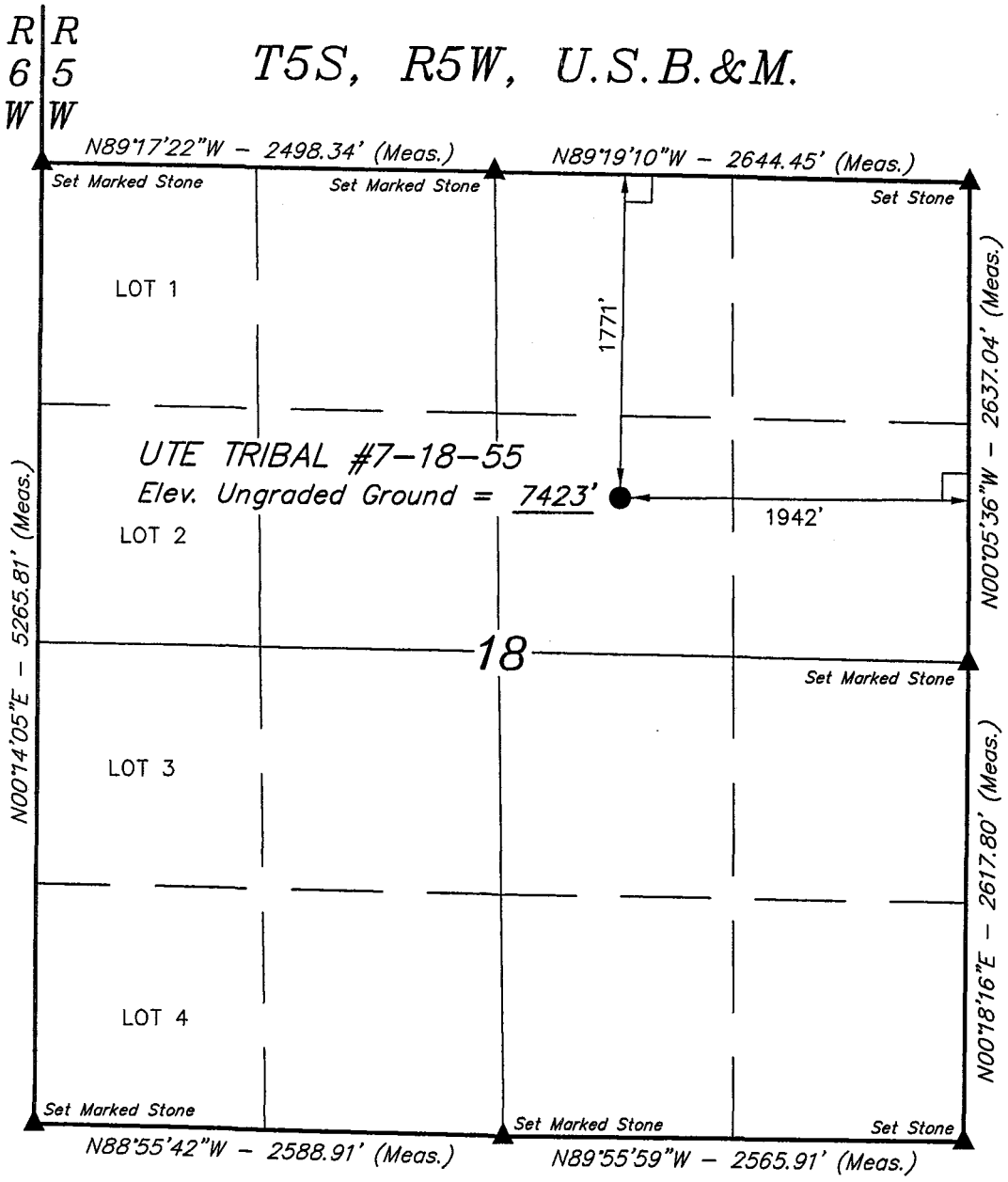

LEGEND:

└ = 90° SYMBOL

● = PROPOSED WELL HEAD.

▲ = SECTION CORNERS LOCATED.

(NAD 83)
LATITUDE = 40°02'55.96" (40.048878)
LONGITUDE = 110°29'15.00" (110.487500)
(NAD 27)
LATITUDE = 40°02'56.10" (40.048917)
LONGITUDE = 110°29'12.44" (110.486789)

UTE/FNR, LLC.

Well location, UTE TRIBAL #7-18-55, located as shown in the SW 1/4 NE 1/4 of Section 18, T5S, R5W, U.S.B.&M., Duchesne County, Utah.

BASIS OF ELEVATION

BENCH MARK (M67) LOCATED IN THE SW 1/4 OF SECTION 9, T5S, R4W, U.S.B.&M., TAKEN FROM THE DUCHESNE SE QUADRANGLE, UTAH, DUCHESNE COUNTY, 7.5 MINUTE QUAD. (TOPOGRAPHIC MAP) PUBLISHED BY THE UNITED STATES DEPARTMENT OF THE INTERIOR, GEOLOGICAL SURVEY. SAID ELEVATION IS MARKED ON CAP AS BEING 6097 FEET.

BASIS OF BEARINGS

BASIS OF BEARINGS IS A G.P.S. OBSERVATION.

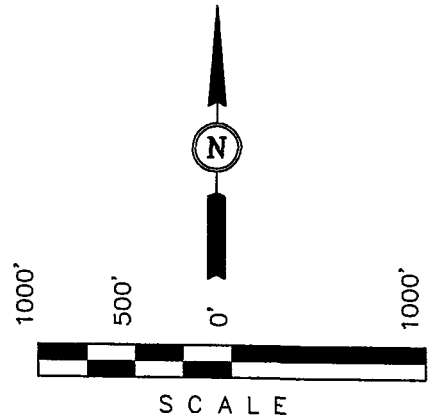

CERTIFICATE

THIS IS TO CERTIFY THAT THE ABOVE PLAT WAS PREPARED FROM FIELD NOTES OF ACTUAL SURVEYS MADE BY ME OR UNDER MY SUPERVISION AND THAT THE SAME ARE TRUE AND CORRECT TO THE BEST OF MY KNOWLEDGE AND BELIEF.

REGISTERED LAND SURVEYOR
REGISTRATION NO. 161319
STATE OF UTAH

REGISTERED LAND SURVEYOR No. 161319 ROBERT L. KAY STATE OF UTAH

UINTAH ENGINEERING & LAND SURVEYING
85 SOUTH 200 EAST – VERNAL, UTAH 84078
(435) 789-1017

SCALE 1" = 1000'	DATE SURVEYED: 09-08-06	DATE DRAWN: 09-09-06
PARTY J.R. R.P. D.H. P.M.	REFERENCES G.L.O. PLAT	
WEATHER WARM	FILE UTE/FNR, LLC.	

FIML NATURAL RESOURCES, LLC

Ute Tribal 7-18-55
SW NE 1,771' FNL 1,942' FEL Sec 18, T-5S, R-5W, U.S.B. & M.
Duchesne County, Utah
BIA Lease Number 14-20-H62-5057

DRILLING PROGRAM

1. **Estimated Tops of Geological Markers:**

Formation	Depth
Uinta	surface
Green River	1,588' (top based on FIML Natural Resources, LLC Green River structure map dated September 26, 2005)
Mahogany Bench	2,776' (top based on FIML Natural Resources, LLC Mahogany Bench structure map dated September 26, 2005)
Garden Gulch	3,688' (top based on FIML Natural Resources, LLC Garden Gulch structure map dated September 26, 2005)
Douglas Creek	4,584' (top based on FIML Natural Resources, LLC Douglas Creek structure map dated September 26, 2005)
Castle Peak	5,521' top based on FIML Natural Resources, LLC Castle Peak structure map dated September 26, 2005)
Uteland Butte Ls.	5,883' (top based on FIML Natural Resources, LLC Uteland Butte structure map dated September 26, 2005)
Wasatch	6,112' (top based on FIML Natural Resources, LLC Wasatch structure map dated September 26, 2005)
Total Depth	6,500'

2. **Estimated Depths of Anticipated Water, Oil, Gas, or Other Minerals:**

Substance	Formation	Depth
Oil/Gas	Douglas Creek	4,584' (top based on FIML Natural Resources, LLC Douglas Creek structure map dated September 26, 2005)
Oil/Gas	Castle Peak	5,521'(top based on FIML Natural Resources, LLC Castle Peak structure map dated September 26, 2005)
Oil/Gas	Uteland Butte	5,883'(top based on FIML Natural Resources, LLC Uteland Butte structure map dated September 26, 2005)
Oil/Gas	Wasatch	6,112 (top based on FIML Natural Resources, LLC Wasatch structure map dated September 26, 2005)
Other Mineral Zones		N/A

3. **Pressure Control Equipment:**

Please refer to FIML Natural Resources, LLC Standard Operating Procedure (SOP Version: Revised October 6, 2005).

4. **Proposed Casing and Cementing Program:**

Please refer to FIML Natural Resources, LLC Standard Operating Procedure (SOP Version: Revised October 6, 2005).

5. **Drilling Fluids Program:**

Please refer to FIML Natural Resources, LLC Standard Operating Procedure (SOP Version: Revised October 6, 2005).

6. **Evaluation Program:**

Please refer to FIML Natural Resources, LLC Standard Operating Procedure (SOP Version: Revised October 6, 2005).

7. **Abnormal Conditions:**

Please refer to FIML Natural Resources, LLC Standard Operating Procedure (SOP Version: Revised October 6, 2005).

8. **Anticipated Starting Dates and Notification of Operations:**

Please refer to FIML Natural Resources, LLC Standard Operating Procedure (SOP Version: Revised October 6, 2005).

9. **Other Information:**

Please refer to FIML Natural Resources, LLC Standard Operating Procedure (SOP Version: Revised October 6, 2005).

2M SYSTEM

BLOWOUT PREVENTER FOR HIGH PRESSURE WELLS
900 SERIES MINIMUM
2000# psi W.P.
BOP 6" X 3000 PSI or 10" X 3000 PSI

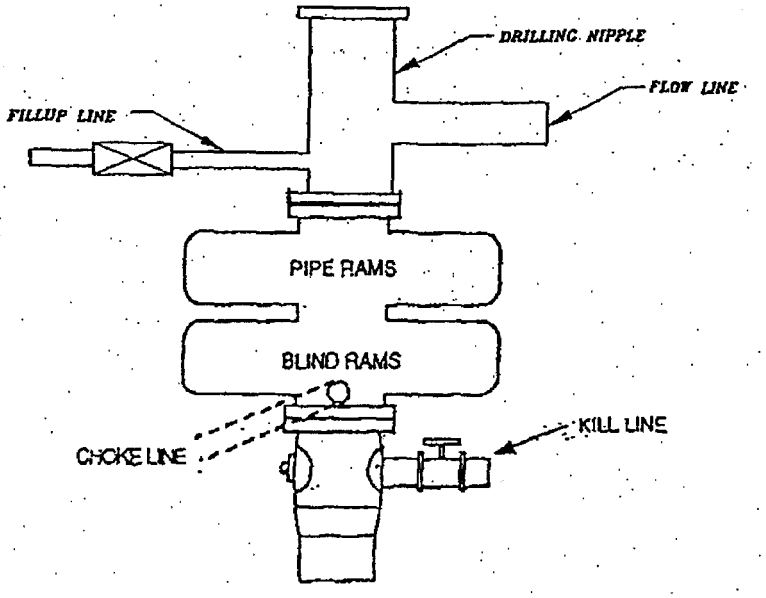

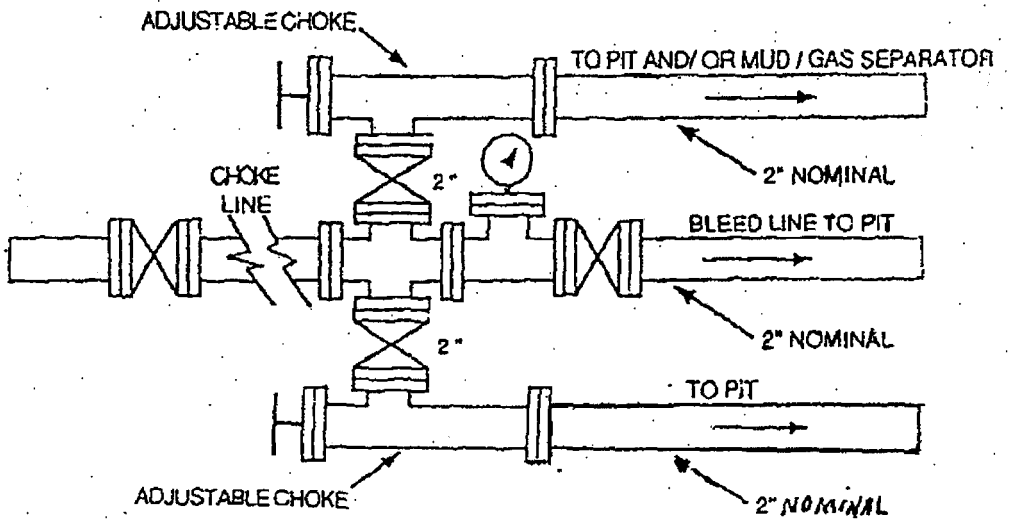

FIML NATURAL RESOURCES, LLC

Ute Tribal 7-18-55
SWNE 1,771' FNL 1,942' FEL, Sec 18, T-5S, R-5W, U.S.B. &M. Duchesne County, Utah
Lease Number 14-20-H62-5057

Onshore Order No. 1

MULTI-POINT SURFACE USE & OPERATIONS PLAN

1. Existing Roads

A. Start in Myton, Utah. Proceed west on US Highway 40, 8.8 miles to the Antelope Creek/Sowers Canyon Road at the Bridgeland turnoff. Turn south and then west and proceed 15.6 miles on the Sowers Canyon Road. Turn north and proceed approximately 5.2 miles to the Coyote Ridge Road. Turn southwest and proceed approximately 4.9 miles to the Berry Petroleum 11-8-55 location. Continue southwest along the new Cottonwood road for approximately 0.8 miles. Continue southwest on the new Ute Tribal 2-18-55 access road. Turn south onto the proposed access road for the Ute Tribal 7-18-55 and continue for approximately 0.15 miles to the Ute Tribal 7-18-55 proposed well location.
B. The proposed well site is located approximately 36 miles southwest of Myton, Utah – See attached Topographic Map "A".
C. Refer to attached Topographic Map "A".
D. Existing roads will be maintained and repaired as necessary. No off lease Right-of-Way will be required.

2. Planned Access Roads

See Topographic Map "B" for the location of the proposed access road.

3. Location of existing wells within a one mile radius of proposed well location

See Topographic Map "C" for the location of existing wells within a one-mile radius.

4. Location of Existing and /or Proposed Facilities

Please refer to FIML Natural Resources, LLC Standard Operating Procedure (SOP Version: October 6, 2005).

5. Location and Type of Water Supply

A. Water supply will be from East Duchesne Water District, Arcadia, Utah. Section 28, T-3S, R-3W, Duchesne County, Utah. The water right number is 43-10152.
B. Water will be hauled by Ute Tribal Water Service.
C. No water well will be drilled on the lease.

6. Source of Construction Materials

Please refer to FIML Natural Resources, LLC Standard Operating Procedure (SOP Version: October 6, 2005).

7. Method of Handling Waste Materials

Please refer to FIML Natural Resources, LLC Standard Operating Procedure (SOP Version: October 6, 2005).

8. Ancillary Facilities

Please refer to FIML Natural Resources, LLC Standard Operating Procedure (SOP Version: October 6, 2005).

9. Well Site Layout

The attached Location Layout diagram describes drill pad cross-sections, cuts and fills, and locations of the mud tanks, reserve pit, pipe racks, trailer parking, spoil dirt stockpile(s) and top soil stockpile(s).

10. Plans for Restoration of the Surface

Please refer to FIML Natural Resources, LLC Standard Operating Procedure (SOP Version: October 6, 2005).

11. Surface Ownership

Access Road: Ute Indian Tribe
Location: Ute Indian Tribe

12. Other Information

Please refer to FIML Natural Resources, LLC Standard Operating Procedure (SOP Version: October 6, 2005).

13. Operator's Representative and Certification

Name: Rick L. Parks

Address: 410 17th Street
Suite 900
Denver, Colorado 80202

Phone No. 303-893-5081
Cellular No. 303-229-7689

All lease and/or unit operations will be conducted in such a manner that full compliance is made with all applicable laws, regulations and Onshore Oil and Gas Orders. FIML Natural Resources, LLC is fully responsible for the actions of its subcontractors. A copy of these conditions will be furnished to the field representative to ensure compliance.

Certification:

I hereby certify that I, or persons under my direct supervision, have inspected the proposed drill site and access route; that I am familiar with the conditions that presently exist; that the statements made in this plan are, to the best of my knowledge and belief, true and correct; and that the work associated with operations proposed herein will be performed by FIML Natural Resources, LLC and its contractors and subcontractors in conformity with this plan and the terms and conditions under which it was approved. This statement is subject to the provisions of 18 U.S. C. 1001 for the filing of a false statement.

9/21/06
Date

Rick L. Parks
Operations Manager
FIML Natural Resources, LLC

EPA's LIST OF NONEXEMPT EXPLORATION AND PRODUCTION WASTES

While the following wastes are nonexempt, they are not necessarily hazardous.

- Unused fracturing fluids or acids
- Gas plant cooling tower cleaning wastes
- Painting wastes
- Oil and gas service company wastes, such as empty drums, drum rinsate, vacuum truck rinsate, sandblast media, painting wastes, spend solvents, spilled chemicals, and waste acids
- Vacuum truck and drum rinsate from trucks and drums, transporting or containing nonexempt waste
- Refinery wastes
- Liquid and solid wastes generated by crude oil and tank bottom reclaimers
- Used equipment lubrication oils
- Waste compressor oil, filters, and blowdown
- Used hydraulic fluids
- Waste solvents
- Waste in transportation pipeline-related pits
- Caustic or acid cleaners
- Boiler cleaning wastes
- Boiler refractory bricks
- Incinerator ash
- Laboratory wastes
- Sanitary wastes
- Pesticide waste
- Radioactive tracer wastes
- Drums, insulation, and miscellaneous solids

UTE/FNR, LLC.

UTE TRIBAL #7-18-55

LOCATED IN DUCHESNE COUNTY, UTAH
SECTION 18, T5S, R5W, U.S.B.&M.

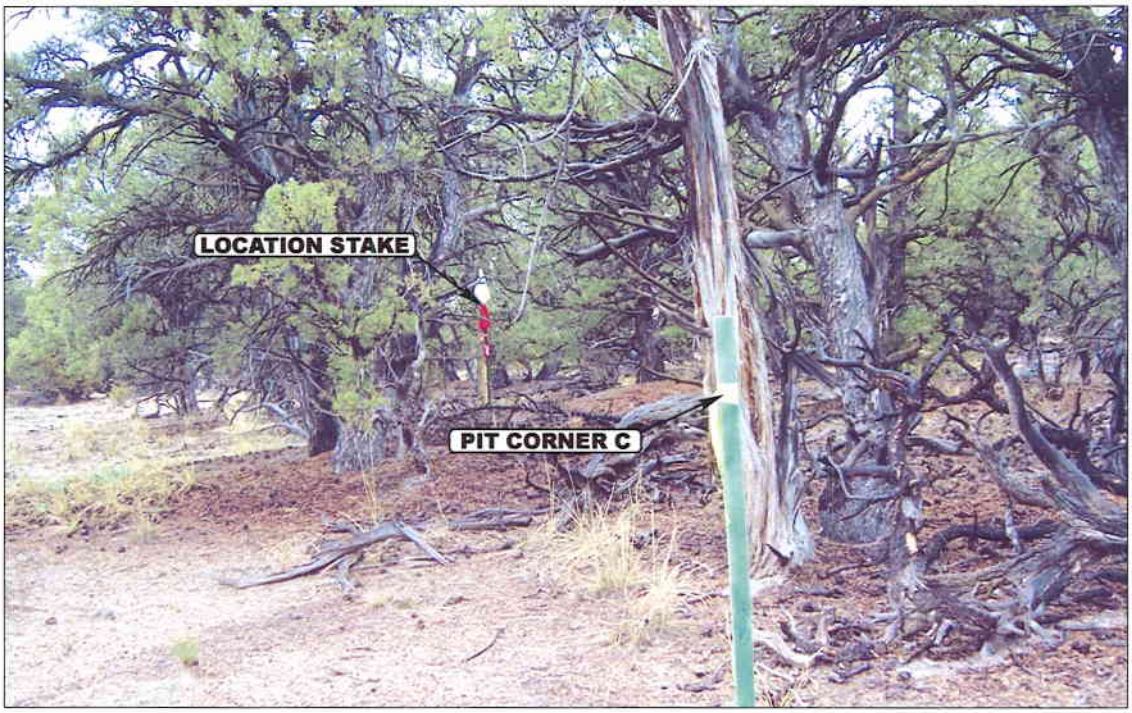

PHOTO: VIEW FROM PIT CORNER C TO LOCATION STAKE **CAMERA ANGLE: NORTHWESTERLY**

PHOTO: VIEW FROM BEGINNING OF PROPOSED ACCESS **CAMERA ANGLE: SOUTHWESTERLY**

- Since 1964 -
Uintah Engineering & Land Surveying
85 South 200 East Vernal, Utah 84078
435-789-1017 uels@uelsinc.com

LOCATION PHOTOS	09 MONTH	09 DAY	06 YEAR	PHOTO
TAKEN BY: J.R.	DRAWN BY: P.M.	REVISED: 00-00-00		

UTE/FNR, LLC.

LOCATION LAYOUT FOR

UTE TRIBAL #7-18-55

SECTION 18, T5S, R5W, U.S.B.&M.

1771' FNL 1942' FEL

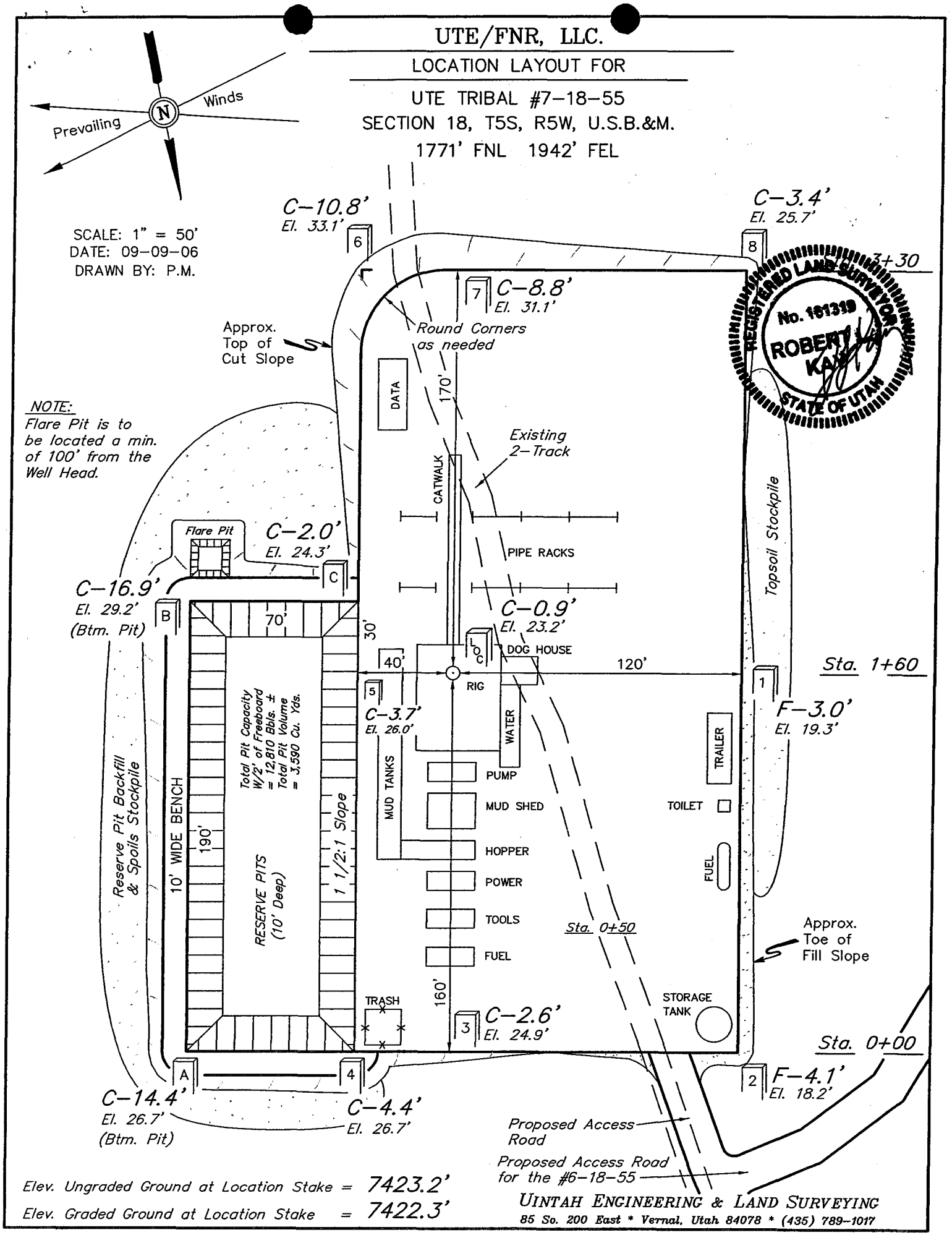

Elev. Ungraded Ground at Location Stake = 7423.2'

Elev. Graded Ground at Location Stake = 7422.3'

UINTAH ENGINEERING & LAND SURVEYING

85 So. 200 East * Vernal, Utah 84078 * (435) 789-1017

UTE/FNR, LLC.

TYPICAL CROSS SECTIONS FOR

UTE TRIBAL #7-18-55
SECTION 18, T5S, R5W, U.S.B.&M.
1771' FNL 1942' FEL

1" = 20'
X-Section Scale
1" = 50'

DATE: 09-09-06
DRAWN BY: P.M.

REGISTERED LAND SURVEYOR No. 161319 ROBERT L. KAY STATE OF UTAH

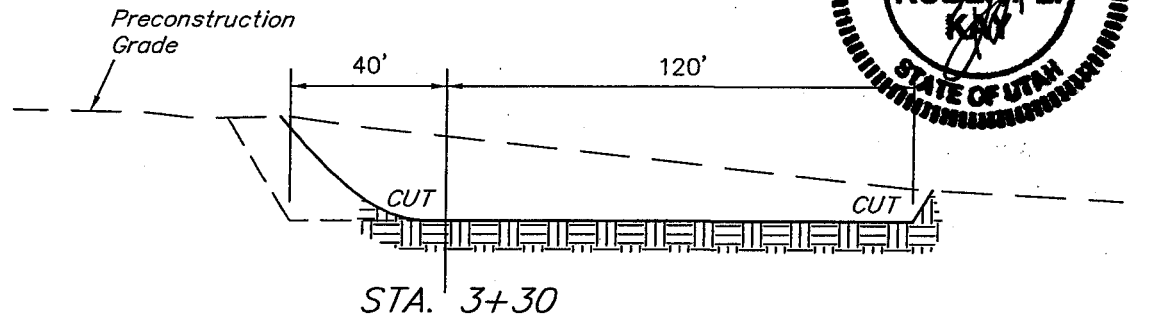

STA. 3+30

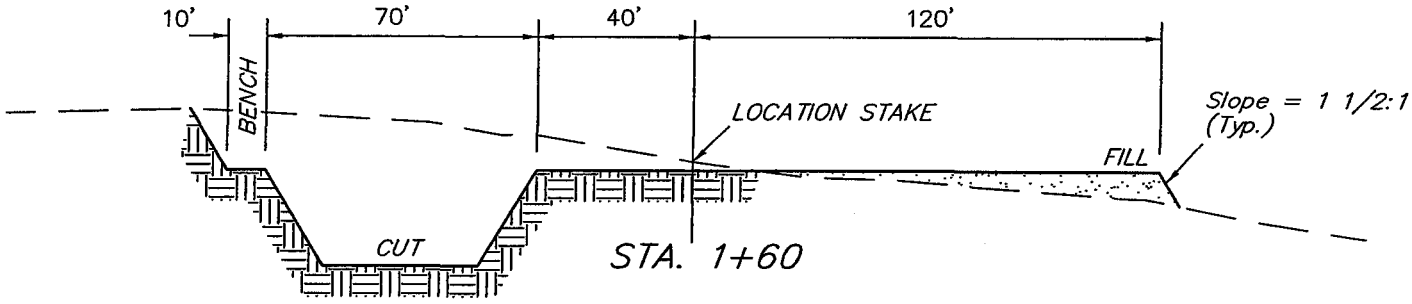

STA. 1+60

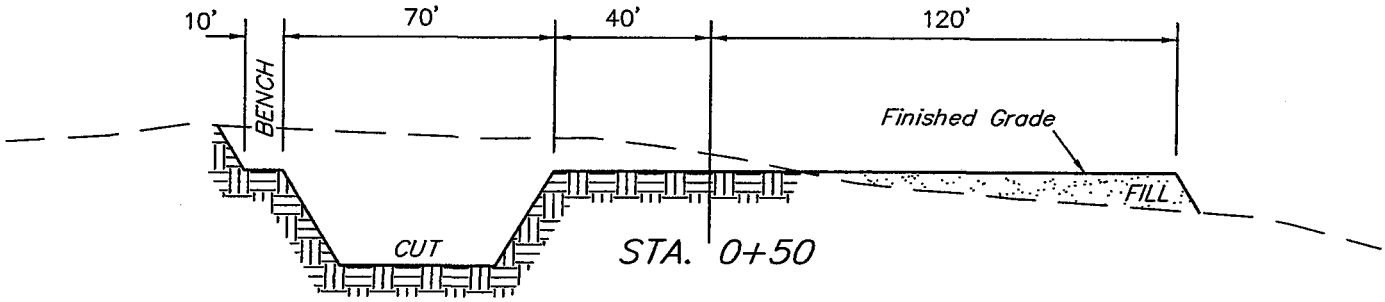

STA. 0+50

STA. 0+00

NOTE:
Topsoil should not be Stripped Below Finished Grade on Substructure Area.

* NOTE:
FILL QUANTITY INCLUDES 5% FOR COMPACTION

APPROXIMATE YARDAGES

CUT
(12") Topsoil Stripping = 2,930 Cu. Yds.
Remaining Location = 8,250 Cu. Yds.

TOTAL CUT = 11,180 CU.YDS.
FILL = 2,580 CU.YDS.

EXCESS MATERIAL = 8,600 Cu. Yds.
Topsoil & Pit Backfill (1/2 Pit Vol.) = 4,730 Cu. Yds.
EXCESS UNBALANCE (After Interim Rehabilitation) = 3,870 Cu. Yds.

UINTAH ENGINEERING & LAND SURVEYING
85 So. 200 East * Vernal, Utah 84078 * (435) 789-1017

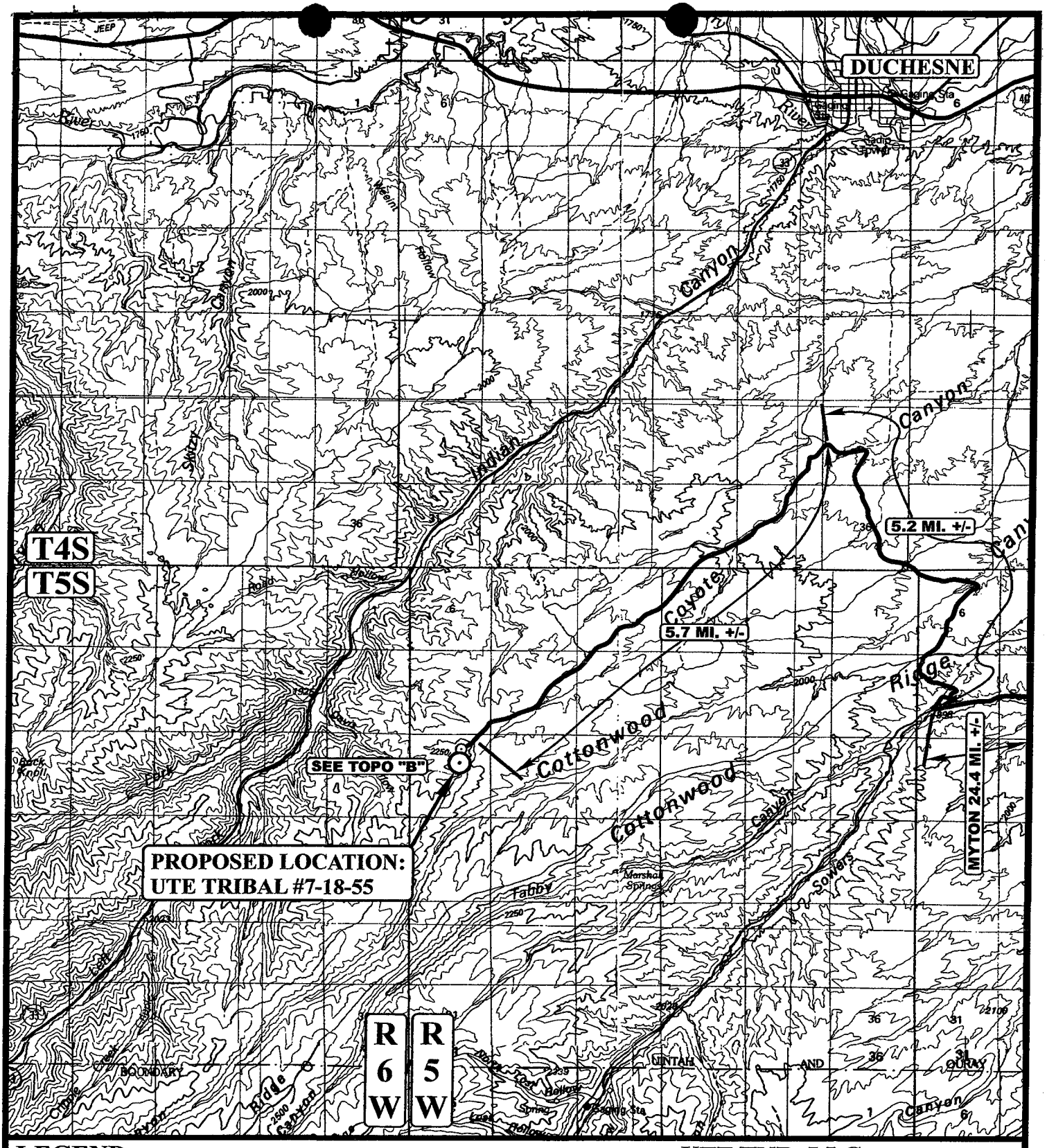

LEGEND:

⊙ PROPOSED LOCATION

N

UTE/FNR, LLC.

UTE TRIBAL #7-18-55
SECTION 18, T5S, R5W, U.S.B.&M.
1771' FNL 1942' FEL

Uintah Engineering & Land Surveying
85 South 200 East Vernal, Utah 84078
(435) 789-1017 * FAX (435) 789-1813

TOPOGRAPHIC MAP	09 MONTH	09 DAY	06 YEAR	A TOPO
SCALE: 1:100,000	DRAWN BY: P.M.	REVISED: 00-00-00		

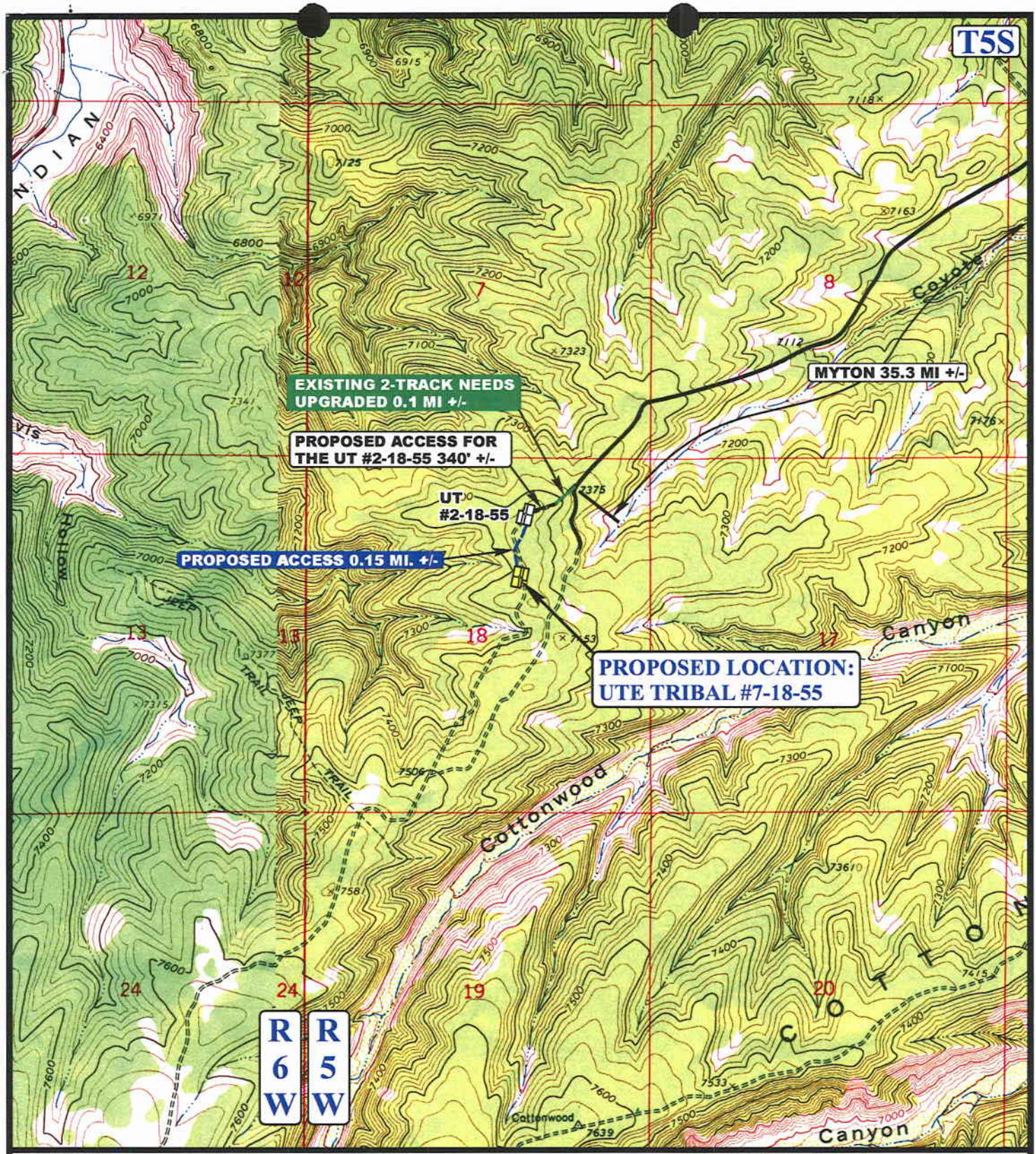

LEGEND:

EXISTING ROAD

PROPOSED ACCESS ROAD

N

UTE/FNR, LLC.

UTE TRIBAL #7-18-55
SECTION 18, T5S, R5W, U.S.B.&M.
1771' FNL 1942' FEL

Uintah Engineering & Land Surveying
85 South 200 East Vernal, Utah 84078
(435) 789-1017 * FAX (435) 789-1813

TOPOGRAPHIC MAP	09 MONTH	09 DAY	06 YEAR	B TOPO
SCALE: 1" = 2000'	DRAWN BY: P.M.	REVISED: 00-00-00		

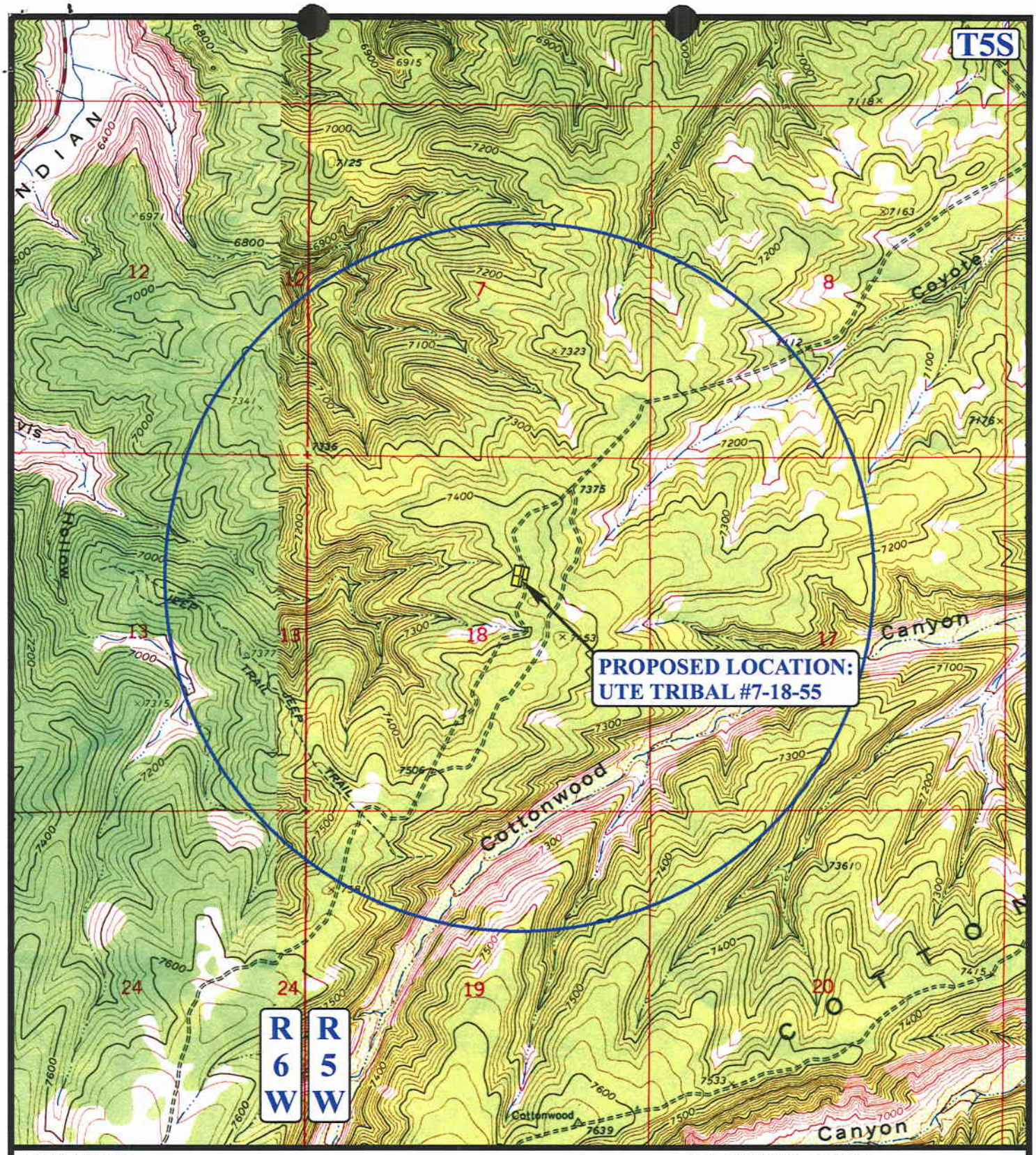

LEGEND:

- DISPOSAL WELLS
- PRODUCING WELLS
- SHUT IN WELLS
- WATER WELLS
- ABANDONED WELLS
- TEMPORARILY ABANDONED

N

UTE/FNR, LLC.

UTE TRIBAL #7-18-55
SECTION 18, T5S, R5W, U.S.B.&M.
1771' FNL 1942' FEL

Uintah Engineering & Land Surveying
85 South 200 East Vernal, Utah 84078
(435) 789-1017 * FAX (435) 789-1813

TOPOGRAPHIC MAP	09 MONTH	09 DAY	06 YEAR
SCALE: 1" = 2000'	DRAWN BY: P.M.	REVISED: 00-00-00	

C TOPO

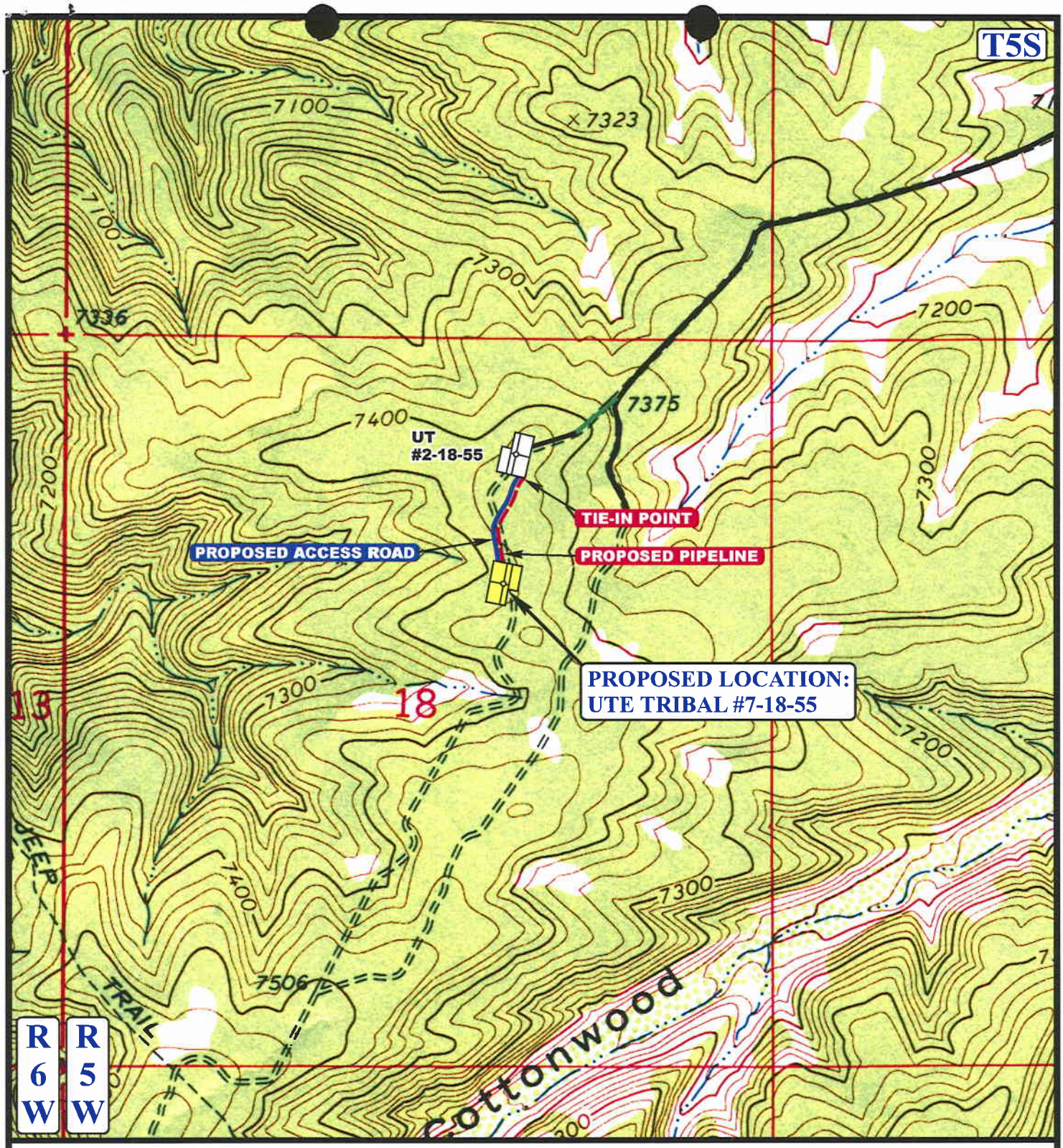

APPROXIMATE TOTAL PIPELINE DISTANCE = 662' +/-

LEGEND:

- PROPOSED ACCESS ROAD
- EXISTING PIPELINE
- PROPOSED PIPELINE
- PROPOSED PIPELINE (SERVICING OTHER WELLS)

N

UTE/FNR, LLC.

UTE TRIBAL #7-18-55
SECTION 18, T5S, R5W, U.S.B.&M.
1771' FNL 1942' FEL

Uintah Engineering & Land Surveying
85 South 200 East Vernal, Utah 84078
(435) 789-1017 * FAX (435) 789-1813

TOPOGRAPHIC MAP	09 MONTH	09 DAY	06 YEAR	D TOPO
SCALE: 1" = 1000'	DRAWN BY: P.M.	REVISED: 00-00-00		

WORKSHEET
APPLICATION FOR PERMIT TO DRILL

APD RECEIVED: 09/25/2006

API NO. ASSIGNED: 43-013-33348

WELL NAME: UTE TRIBAL 7-18-55

OPERATOR: FIML NATURAL RESOURCES (N2530)

PHONE NUMBER: 303-893-5073

CONTACT: MARK BINGHAM

PROPOSED LOCATION:

SWNE 18 050S 050W

SURFACE: 1771 FNL 1942 FEL

BOTTOM: 1771 FNL 1942 FEL

COUNTY: DUCHESNE

LATITUDE: 40.04895 LONGITUDE: -110.4871

UTM SURF EASTINGS: 543750 NORTHINGS: 4433106

FIELD NAME: UNDESIGNATED (2)

INSPECT LOCATN BY: / /

Tech Review	Initials	Date
Engineering		
Geology		
Surface		

LEASE TYPE: 2 - Indian

LEASE NUMBER: 14-20-H62-5057

SURFACE OWNER: 2 - Indian

PROPOSED FORMATION: WSTC

COALBED METHANE WELL? NO

RECEIVED AND/OR REVIEWED:

✓ Plat

✓ Bond: Fed[] Ind[2] Sta[] Fee[]
(No. 8191-82-71)

N Potash (Y/N)

N Oil Shale 190-5 (B) or 190-3 or 190-13

✓ Water Permit
(No. 43-10152)

N RDCC Review (Y/N)
(Date:)

N/A Fee Surf Agreement (Y/N)

N/A Intent to Commingle (Y/N)

LOCATION AND SITING:

____ R649-2-3.

Unit: ____

____ R649-3-2. General
Siting: 460 From Qtr/Qtr & 920' Between Wells

✓ R649-3-3. Exception

____ Drilling Unit
Board Cause No: ____
Eff Date: ____
Siting: ____

____ R649-3-11. Directional Drill

COMMENTS: Sep, Separate file

STIPULATIONS: 1- Federal Approval
2- Spacing Stip

OPERATOR: FIML NAT RES LLC (N2530)

SEC: 18 T.5S R. 5W

FIELD: UNDESIGNATED (002)

COUNTY: DUCHESNE

SPACING: R649-3-3 / EXCEPTION LOCATION

Field Status
- ABANDONED
- ACTIVE
- COMBINED
- INACTIVE
- PROPOSED
- STORAGE
- TERMINATED

Unit Status
- EXPLORATORY
- GAS STORAGE
- NF PP OIL
- NF SECONDARY
- PENDING
- PI OIL
- PP GAS
- PP GEOTHERML
- PP OIL
- SECONDARY
- TERMINATED

Wells Status
- GAS INJECTION
- GAS STORAGE
- LOCATION ABANDONED
- NEW LOCATION
- PLUGGED & ABANDONED
- PRODUCING GAS
- PRODUCING OIL
- SHUT-IN GAS
- SHUT-IN OIL
- TEMP. ABANDONED
- TEST WELL
- WATER INJECTION
- WATER SUPPLY
- WATER DISPOSAL
- DRILLING

Utah Oil Gas and Mining

N
W E
S

PREPARED BY: DIANA WHITNEY
DATE: 26-SEPTEMBER-2006

JON M. HUNTSMAN, JR.
Governor

GARY R. HERBERT
Lieutenant Governor

State of Utah

Department of Natural Resources

MICHAEL R. STYLER
Executive Director

Division of Oil, Gas & Mining

JOHN R. BAZA
Division Director

September 26, 2006

FIML Natural Resources, LLC
410 17th St., 9th Fl.
Denver, CO 80202

Re: Ute Tribal 7-18-55 Well, 1771' FNL, 1942' FEL, SW NE, Sec. 18, T. 5 South, R. 5 West, Duchesne County, Utah

Gentlemen:

Pursuant to the provisions and requirements of Utah Code Ann.§ 40-6-1 *et seq.*, Utah Administrative Code R649-3-1 *et seq.*, and the attached Conditions of Approval, approval to drill the referenced well is granted.

Appropriate information has been submitted to DOGM and administrative approval of the requested exception location is hereby granted.

This approval shall expire one year from the above date unless substantial and continuous operation is underway, or a request for extension is made prior to the expiration date. The API identification number assigned to this well is 43-013-33348.

Sincerely,

Gil Hunt
Associate Director

pab
Enclosures

cc: Duchesne County Assessor
Bureau of Land Management, Vernal District Office

1594 West North Temple, Suite 1210, PO Box 145801, Salt Lake City, UT 84114-5801
telephone (801) 538-5340 • facsimile (801) 359-3940 • TTY (801) 538-7458 • *www.ogm.utah.gov*

Operator: FIML Natural Resources, LLC

Well Name & Number Ute Tribal 7-18-55

API Number: 43-013-33348

Lease: 14-20-H62-5057

Location: SW NE **Sec.** 18 **T.** 5 South **R.** 5 West

Conditions of Approval

1. General

   Compliance with the requirements of Utah Admin. R. 649-1 *et seq.*, the Oil and Gas Conservation General Rules, and the applicable terms and provisions of the approved Application for permit to drill.

2. Notification Requirements

   Notify the Division within 24 hours of spudding the well.

   - Contact Carol Daniels at (801) 538-5284.

   Notify the Division prior to commencing operations to plug and abandon the well.

   - Contact Dan Jarvis at (801) 538-5338

3. Reporting Requirements

   All required reports, forms and submittals will be promptly filed with the Division, including but not limited to the Entity Action Form (Form 6), Report of Water Encountered During Drilling (Form 7), Weekly Progress Reports for drilling and completion operations, and Sundry Notices and Reports on Wells requesting approval of change of plans or other operational actions.

4. State approval of this well does not supersede the required federal approval, which must be obtained prior to drilling.

5. This proposed well is located in an area for which drilling units (well spacing patterns) have not been established through an order of the Board of Oil, Gas and Mining (the "Board"). In order to avoid the possibility of waste or injury to correlative rights, the operator is requested, once the well has been drilled, completed, and has produced, to analyze geological and engineering data generated therefrom, as well as any similar data from surrounding areas if available. As soon as is practicable after completion of its analysis, and if the analysis suggests an area larger than the quarter-quarter section upon which the well is located is being drained, the operator is requested to seek an appropriate order from the Board establishing drilling and spacing units in conformance with such analysis by filing a Request for Agency Action with the Board.

RECEIVED

SEP 2 8 2006

BLM VERNAL, UTAH

Form 3160-3
(April 2004)

FORM APPROVED
OMB No. 1004-0137
Expires March 31, 2007

UNITED STATES
DEPARTMENT OF THE INTERIOR
BUREAU OF LAND MANAGEMENT

APPLICATION FOR PERMIT TO DRILL OR REENTER

5. Lease Serial No.
14-20-H62-5057

6. If Indian, Allotee or Tribe Name
Ute Indian Tribe

7. If Unit or CA Agreement, Name and No.

1a. Type of work: ☑ DRILL ☐ REENTER

1b. Type of Well: ☑ Oil Well ☐ Gas Well ☐ Other ☐ Single Zone ☑ Multiple Zone

8. Lease Name and Well No.
Ute Tribal 7-18-55

2. Name of Operator
FIML Natural Resources, LLC

9. API Well No.
43-013-33348

3a. Address
410 17th Street, 9th Floor, Denver, CO 80202

3b. Phone No. *(include area code)*
303-893-5073

10. Field and Pool, or Exploratory
Undesignated

4. Location of Well *(Report location clearly and in accordance with any State requirements.*)*
At surface **SWNE 1771' FNL 1,942' FEL**
At proposed prod. zone **Same as above**

11. Sec., T. R. M. or Blk. and Survey or Area
Sec 18, T5S-R5W, U.S.B.&M.

14. Distance in miles and direction from nearest town or post office*
36 miles southwest of Myton, Utah

12. County or Parish
Duchesne

13. State
Utah

15. Distance from proposed* location to nearest property or lease line, ft. (Also to nearest drlg. unit line, if any) **1,771'**

16. No. of acres in lease
640

17. Spacing Unit dedicated to this well
40

18. Distance from proposed location* to nearest well, drilling, completed, applied for, on this lease, ft. **1,524'**

19. Proposed Depth
6,500'

20. BLM/BIA Bond No. on file
8191-82-71

21. Elevations (Show whether DF, KDB, RT, GL, etc.)
7,423' GL (Ungraded)

22. Approximate date work will start*
04/15/2007

23. Estimated duration
Seven days

24. Attachments

The following, completed in accordance with the requirements of Onshore Oil and Gas Order No.1, shall be attached to this form:

1. Well plat certified by a registered surveyor.
2. A Drilling Plan.
3. A Surface Use Plan (if the location is on National Forest System Lands, the SUPO shall be filed with the appropriate Forest Service Office).
4. Bond to cover the operations unless covered by an existing bond on file (see Item 20 above).
5. Operator certification
6. Such other site specific information and/or plans as may be required by the authorized officer.

25. Signature
Name *(Printed/Typed)* **Mark Bingham**
Date **09/21/2006**
Title **Senior Vice President**

Approved by *(Signature)*
Name *(Printed/Typed)* Jerry Kenczka
Date 4-10-2007
Title Assistant Field Manager Lands & Mineral Resources
Office

Application approval does not warrant or certify that the applicant holds legal or equitable title to those rights in the subject lease which would entitle the applicant to conduct operations thereon.
Conditions of approval, if any, are attached. CONDITIONS OF APPROVAL ATTACHED

Title 18 U.S.C. Section 1001 and Title 43 U.S.C. Section 1212, make it a crime for any person knowingly and willfully to make to any department or agency of the United States any false, fictitious or fraudulent statements or representations as to any matter within its jurisdiction.

**(Instructions on page 2)*

NOTICE OF APPROVAL

RECEIVED
APR 1 6 2007
DIV. OF OIL, GAS & MINING

UDOGM

UNITED STATES DEPARTMENT OF THE INTERIOR
BUREAU OF LAND MANAGEMENT
VERNAL FIELD OFFICE

170 South 500 East VERNAL, UT 84078 (435) 781-4400

CONDITIONS OF APPROVAL FOR APPLICATION FOR PERMIT TO DRILL

Company:	**FIML Natural Resources, LLC**	**Location:**	**SWNE, Sec. 18, T5S, R5W**
Well No:	**Ute Tribal 7-18-55**	**Lease No:**	**14-20-H62-5057**
API No:	**43-013-33348**	**Agreement:**	**N/A**

Title	**Name**	**Office Phone Number**	**Cell Phone Number**
Petroleum Engineer:	Matt Baker	(435) 781-4490	(435) 828-4470
Petroleum Engineer:	Michael Lee	(435) 781-4432	(435) 828-7875
Petroleum Engineer:	James Ashley	(435) 781-4470	(435) 828-7874
Petroleum Engineer:	Ryan Angus	(435) 781-4430	(435) 828-7368
Supervisory Petroleum Technician:	Jamie Sparger	(435) 781-4502	(435) 828-3913
NRS/Enviro Scientist:	Paul Buhler	(435) 781-4475	(435) 828-4029
NRS/Enviro Scientist:	Karl Wright	(435) 781-4484	
NRS/Enviro Scientist:	Holly Villa	(435) 781-4404	
NRS/Enviro Scientist:	Melissa Hawk	(435) 781-4476	(435) 828-7381
NRS/Enviro Scientist:	Chuck MacDonald	(435) 781-4441	(435) 828-7481
NRS/Enviro Scientist:	Jannice Cutler	(435) 781-3400	
NRS/Enviro Scientist:	Michael Cutler	(435) 781-3401	
NRS/Enviro Scientist:	Anna Figueroa	(435) 781-3407	
NRS/Enviro Scientist:	Verlyn Pindell	(435) 781-3402	
NRS/Enviro Scientist:	Darren Williams	(435) 781-4447	
NRS/Enviro Scientist:	Nathan Packer	(435) 781-3405	
		Fax: (435) 781-4410	

A COPY OF THESE CONDITIONS SHALL BE FURNISHED TO YOUR FIELD REPRESENTATIVE TO INSURE COMPLIANCE

All lease and/or unit operations are to be conducted in such a manner that full compliance is made with the applicable laws, regulations (43 CFR Part 3160), and this approved Application for Permit to Drill including Surface and Downhole Conditions of Approval. The operator is considered fully responsible for the actions of his subcontractors. A copy of the approved APD must be on location during construction, drilling, and completion operations. **This permit is approved for a one-year period. An additional year extension may be applied for by sundry notice prior to expiration.**

NOTIFICATION REQUIREMENTS

Location Construction (Notify Environmental Scientist)	-	Forty-Eight (48) hours prior to construction of location and access roads.
Location Completion (Notify Environmental Scientist)	-	Prior to moving on the drilling rig.
Spud Notice (Notify Petroleum Engineer)	-	Twenty-Four (24) hours prior to spudding the well.
Casing String & Cementing (Notify Supv. Petroleum Tech.)	-	Twenty-Four (24) hours prior to running casing and cementing all casing strings.
BOP & Related Equipment Tests (Notify Supv. Petroleum Tech.)	-	Twenty-Four (24) hours prior to initiating pressure tests.
First Production Notice (Notify Petroleum Engineer)	-	Within Five (5) business days after new well begins or production resumes after well has been off production for more than ninety (90) days.

SURFACE USE PROGRAM
CONDITIONS OF APPROVAL (COAs)

GENRAL SURFACE COA

- If there is an active Gilsonite mining operation within 2 miles of the well location, operator shall notify the Gilsonite operator at least 48 hours prior to any blasting during construction.

- If paleontological materials are uncovered during construction, the operator is to immediately stop work and contact the Authorized Officer (AO). A report will be prepared by a BLM permitted paleontologist and submitted to the AO at the completion of surface disturbing activities.

SITE SPECIFIC COAs

- None

DOWNHOLE CONDITIONS OF APPROVAL

SITE SPECIFIC DOWNHOLE CONDITIONS OF APPROVAL

- None

All provisions outlined in Onshore Oil & Gas Order #2 Drilling Operations shall be strictly adhered to. The following items are emphasized:

DRILLING/COMPLETION/PRODUCING OPERATING STANDARDS

- The spud date and time shall be reported orally to Vernal Field Office within 24 hours of spudding.

- Notify Vernal Field Office Supervisory Petroleum Engineering Technician at least 24 hours in advance of casing cementing operations and BOPE & casing pressure tests.

- Blowout prevention equipment (BOPE) shall remain in use until the well is completed or abandoned. Closing unit controls shall remain unobstructed and readily accessible at all times. Choke manifolds shall be located outside of the rig substructure.

- All BOPE components shall be inspected daily and those inspections shall be recorded in the daily drilling report. Components shall be operated and tested as required by Onshore Oil & Gas Order No. 2 to insure good mechanical working order. All BOPE pressure tests shall be performed by a test pump with a chart recorder and **NOT** by the rig pumps. Test shall be reported in the driller's log.

- BOP drills shall be initially conducted by each drilling crew within 24 hours of drilling out from under the surface casing and weekly thereafter as specified in Onshore Oil & Gas Order No. 2.

- Casing pressure tests are required before drilling out from under all casing strings set and cemented in place.

- No aggressive/fresh hard-banded drill pipe shall be used within casing.

- **Cement baskets shall not be run on surface casing.**

- The operator must report all shows of water or water-bearing sands to the BLM. If flowing water is encountered it must be sampled, analyzed, and a copy of the analyses submitted to the BLM Vernal Field Office.

- The operator must report encounters of all non oil & gas mineral resources (such as Gilsonite, tar sands, oil shale, trona, etc.) to the Vernal Field Office, in writing, within 5 working days of each encounter. Each report shall include the well name/number, well location, date and depth (from KB or GL) of encounter, vertical footage of the encounter and, the name of the person making the report (along with a telephone number) should the BLM need to obtain additional information.

- A complete set of angular deviation and directional surveys of a directional well will be submitted to the Vernal BLM office engineer within 30 days of the completion of the well.

- Chronologic drilling progress reports shall be filed directly with the BLM, Vernal Field Office on a weekly basis in sundry, letter format or e-mail to the Petroleum Engineers until the well is completed.

- A cement bond log (CBL) will be run from the production casing shoe to the top of cement and shall be utilized to determine the bond quality for the production casing. Submit a field copy of the CBL to this office.

- **Please submit an electronic copy of all other logs run on this well in LAS format to UT_VN_Welllogs@BLM.gov. This submission will supersede the requirement for submittal of paper logs to the BLM.**

- There shall be no deviation from the proposed drilling, completion, and/or workover program as approved. Safe drilling and operating practices must be observed. Any changes in operation must have prior approval from the BLM Vernal Field Office.

OPERATING REQUIREMENT REMINDERS:

- All wells, whether drilling, producing, suspended, or abandoned, shall be identified in accordance with 43 CFR 3162.6. There shall be a sign or marker with the name of the operator, lease serial number, well number, and surveyed description of the well.

- In accordance with 43 CFR 3162.4-3, this well shall be reported on the "Monthly Report of Operations" (Oil and Gas Operations Report ((OGOR)) starting with the month in which operations commence and continue each month until the well is physically plugged and abandoned. This report shall be filed in duplicate, directly with the Minerals Management Service, P.O. Box 17110, Denver, Colorado 80217-0110, or call 1-800-525-7922 (303) 231-3650 for reporting information.

- Should the well be successfully completed for production, the BLM Vernal Field office must be notified when it is placed in a producing status. Such notification will be by written communication and must be received in this office by not later than the fifth business day following the date on which the well is placed on production. The notification shall provide, as a minimum, the following informational items:

    - Operator name, address, and telephone number.

    - Well name and number.

    - Well location (¼¼, Sec., Twn, Rng, and P.M.).

    - Date well was placed in a producing status (date of first production for which royalty will be paid).

    - The nature of the well's production, (i.e., crude oil, or crude oil and casing head gas, or natural gas and entrained liquid hydrocarbons).

    - The Federal or Indian lease prefix and number on which the well is located; otherwise the non-Federal or non-Indian land category, i.e., State or private.

    - Unit agreement and/or participating area name and number, if applicable.

    - Communitization agreement number, if applicable.

- Any venting or flaring of gas shall be done in accordance with Notice to Lessees (NTL) 4A and needs prior approval from the BLM Vernal Field Office.

- All undesirable events (fires, accidents, blowouts, spills, discharges) as specified in NTL 3A will be reported to the BLM, Vernal Field Office. Major events, as defined in NTL3A, shall be reported verbally within 24 hours, followed by a written report within 15 days. "Other than Major Events" will be reported in writing within 15 days. "Minor Events" will be reported on the Monthly Report of Operations and Production.

- Whether the well is completed as a dry hole or as a producer, "Well Completion and Recompletion Report and Log" (BLM Form 3160-4) shall be submitted not later than 30 days after completion of the well or after completion of operations being performed, in accordance with 43 CFR 3162.4-1. Two copies of all logs run, core descriptions, and all other surveys or data obtained and compiled during the drilling, workover, and/or completion operations, shall be filed on BLM Form 3160-4. Submit with the well completion report a geologic report including, at a minimum, formation tops, and a summary and conclusions. Also include deviation surveys, sample descriptions, strip logs, core data, drill stem test data, and results of production tests if performed. Samples (cuttings, fluid, and/or gas) shall be submitted only when requested by the BLM, Vernal Field Office.

- All off-lease storage, off-lease measurement, or commingling on-lease or off-lease, shall have prior written approval from the BLM Vernal Field Office.

- Oil and gas meters shall be calibrated in place prior to any deliveries. The BLM Vernal Field Office Petroleum Engineers will be provided with a date and time for the initial meter calibration and all future meter proving schedules. A copy of the meter calibration reports shall be submitted to the BLM Vernal Field Office. All measurement facilities will conform to the API standards for liquid hydrocarbons and the AGA standards for natural gas measurement. All measurement points shall be identified as the point of sale or allocation for royalty purposes.

- A schematic facilities diagram as required by Onshore Oil & Gas Order No. 3 shall be submitted to the BLM Vernal Field Office within 30 days of installation or first production, whichever occurs first. All site security regulations as specified in Onshore Oil & Gas Order No. 3 shall be adhered to. All product lines entering and leaving hydrocarbon storage tanks will be effectively sealed in accordance with Onshore Oil & Gas Order No. 3.

- Any additional construction, reconstruction, or alterations of facilities, including roads, gathering lines, batteries, etc., which will result in the disturbance of new ground, shall require the filing of a suitable plan and need prior approval of the BLM Vernal Field Office. Emergency approval may be obtained orally, but such approval does not waive the written report requirement.

- No location shall be constructed or moved, no well shall be plugged, and no drilling or workover equipment shall be removed from a well to be placed in a suspended status without prior approval of the BLM Vernal Field Office. If operations are to be suspended for more than 30 days, prior approval of the BLM Vernal Field Office shall be obtained and notification given before resumption of operations.

- Pursuant to Onshore Oil & Gas Order No. 7, this is authorization for pit disposal of water produced from this well for a period of 90 days from the date of initial production. A permanent disposal method must be approved by this office and in operation prior to the end of this 90-day period. In order to meet this deadline, an application for the proposed permanent disposal method shall be submitted along with any necessary water analyses, as soon as possible, but no later than 45 days after the date of first production. Any method of disposal which has not been approved prior to the end of the authorized 90-day period will be considered as an Incident of Noncompliance and will be grounds for issuing a shut-in order until an acceptable manner for disposing of said water is provided and approved by this office.

- Unless the plugging is to take place immediately upon receipt of oral approval, the Field Office Petroleum Engineers must be notified at least 24 hours in advance of the plugging of the well, in order that a representative may witness plugging operations. If a well is suspended or abandoned, all pits must be fenced immediately until they are backfilled. The "Subsequent Report of Abandonment" (Form BLM 3160-5) must be submitted within 30 days after the actual plugging of the well bore, showing location of plugs, amount of cement in each, and amount of casing left in hole, and the current status of the surface restoration.

JON M. HUNTSMAN, JR.
Governor

GARY R. HERBERT
Lieutenant Governor

State of Utah

Department of Natural Resources

MICHAEL R. STYLER
Executive Director

Division of Oil, Gas & Mining

JOHN R. BAZA
Division Director

October 22, 2007

Cassandra Parks
FIML Natural Resources, LLC
410 17th Street Ste 900
Denver, CO 80202

Re: APDs Rescinded at the request of FIML Natural Resources

Dear Ms. Parks:

Enclosed find the list of APDs that you requested to be rescinded to FIML Natural Resources. No drilling activity at these locations has been reported to the division. Therefore, approval to drill these wells is hereby rescinded, effective October 19, 2007.

A new APD must be filed with this office for approval prior to the commencement of any future work on the subject locations.

If any previously unreported operations have been performed on this well location, it is imperative that you notify the Division immediately.

Sincerely,

Diana Mason
Environmental Scientist

cc: Well File
Bureau of Land Management, Vernal

1594 West North Temple, Suite 1210, PO Box 145801, Salt Lake City, UT 84114-5801
telephone (801) 538-5340 • facsimile (801) 359-3940 • TTY (801) 538-7458 • *www.ogm.utah.gov*

Ute Tribal 1-18-55
Ute Tribal 15-18-55
Ute Tribal 13-18-55
Ute Tribal 6-18-55
Ute Tribal 11-18-55
Ute Tribal 2-13-56
Ute Tribal 7-18-55
Ute Tribal 10-18-55
Ute Tribal 12-18-55
Ute Tribal 9-18-55
Ute Tribal 3-18-55

United States Department of the Interior

BUREAU OF LAND MANAGEMENT
Vernal Field Office
170 South 500 East
Vernal, UT 84078
(435) 781-4400 Fax: (435) 781-4410
http://www.blm.gov/ut/st/en/fo/vernal/html

TAKE PRIDE IN AMERICA

IN REPLY REFER TO:
3160
UT08300

April 23, 2008

43-013-33348

Cassandra Parks
FIML Natural Resources, LLC
410 17th Street, Suite 900
Denver, CO 80202

Re: Notice of Expiration
Well No. Ute Tribal 7-18-55
SWNE, Sec. 18, T5S, R5W
Duchesne County, Utah
Lease No. 14-20-H62-5057

Dear Ms. Parks:

The Application for Permit to Drill the above-referenced well was approved on April 10, 2007. No extension of the original APD was requested. According to our records, no known activity has transpired at the approved location. In view of the foregoing, this office is notifying you that the approval of the referenced application has expired. If you intend to drill at this location in the future, a new Application for Permit to Drill must be submitted.

This office requires a letter confirming that no surface disturbance has been made for this drill site. Any surface disturbance associated with the approved location of this well is to be rehabilitated. A schedule for this rehabilitation must be submitted to this office. Your cooperation in this matter is appreciated.

If you have any questions regarding this matter, please contact me at (435) 781-4455.

Sincerely,

Cindy Severson

Cindy Severson
Land Law Examiner

cc: UDOGM
BIA

RECEIVED
APR 28 2008
DIV. OF OIL, GAS & MINING