Form 3160-3
(September 2001)

FORM APPROVED
OMB No. 1004-0136
Expires January 31, 2004

UNITED STATES
DEPARTMENT OF THE INTERIOR
BUREAU OF LAND MANAGEMENT

APPLICATION FOR PERMIT TO DRILL OR REENTER

5. Lease Serial No.
UTU-74391

6. If Indian, Allottee or Tribe Name
N/A

7. If Unit or CA Agreement, Name and No.
N/A

8. Lease Name and Well No.
Federal 14-19-9-16

1a. Type of Work: [x] DRILL [ ] REENTER

1b. Type of Well: [x] Oil Well [ ] Gas Well [ ] Other [x] Single Zone [ ] Multiple Zone

2. Name of Operator
Newfield Production Company

9. API Well No.
43-013-33161

3a. Address
Route #3 Box 3630, Myton UT 84052

3b. Phone No. *(include area code)*
(435) 646-3721

10. Field and Pool, or Exploratory
Monument Butte

4. Location of Well *(Report location clearly and in accordance with any State requirements.*)*
At surface SE/SW 452' FSL 2258' FWL 571492X 40.010489
At proposed prod. zone 4429047Y -110.162365

11. Sec., T., R., M., or Blk. and Survey or Area
SE/SW Sec. 19, T9S R16E

14. Distance in miles and direction from nearest town or post office*
Approximatley 14.9 miles southwest of Myton, Utah

12. County or Parish
Duchesne

13. State
UT

15. Distance from proposed* location to nearest property or lease line, ft. (Also to nearest drlg. unit line, if any) Approx. 2188' f/lse, NA f/unit

16. No. of Acres in lease
2139.50

17. Spacing Unit dedicated to this well
40 Acres

18. Distance from proposed location* to nearest well, drilling, completed, applied for, on this lease, ft. Approx. 1387'

19. Proposed Depth
6040'

20. BLM/BIA Bond No. on file
UTB000192

21. Elevations (Show whether DF, KDB, RT, GL, etc.)
6245' GL

22. Approximate date work will start*
3rd Quarter 2006

23. Estimated duration
Approximately seven (7) days from spud to rig release.

24. Attachments

The following, completed in accordance with the requirements of Onshore Oil and Gas Order No.1, shall be attached to this form:

1. Well plat certified by a registered surveyor.
2. A Drilling Plan.
3. A Surface Use Plan (if the location is on National Forest System Lands, the SUPO shall be filed with the appropriate Forest Service Office).
4. Bond to cover the operations unless covered by an existing bond on file (see Item 20 above).
5. Operator certification.
6. Such other site specific information and/or plans as may be required by the authorized officer.

25. Signature: Mandie Crozier
Name *(Printed/Typed)*: Mandie Crozier
Date: 4/25/06

Title: Regulatory Specialist

Approved by *(Signature)*: Bradley G. Hill
Name *(Printed/Typed)*: BRADLEY G. HILL
Date: 06-08-06

Title: ENVIRONMENTAL MANAGER
Office:

Application approval does not warrant or certify the the applicant holds legal or equitable title to those rights in the subject lease which would entitle the applicant to conduct operations thereon.
Conditions of approval, if any, are attached.

Title 18 U.S.C. Section 1001 and Title 43 U.S.C. Section 1212, make it a crime for any person knowingly and willfully to make to any department or agency of the United States any false, fictitious or fraudulent statements or representations as to any matter within its jurisdiction.

**(Instructions on reverse)*

Federal Approval of this Action is Necessary

RECEIVED
APR 26 2006
DIV. OF OIL, GAS & MINING

T9S, R16E, S.L.B.&M.

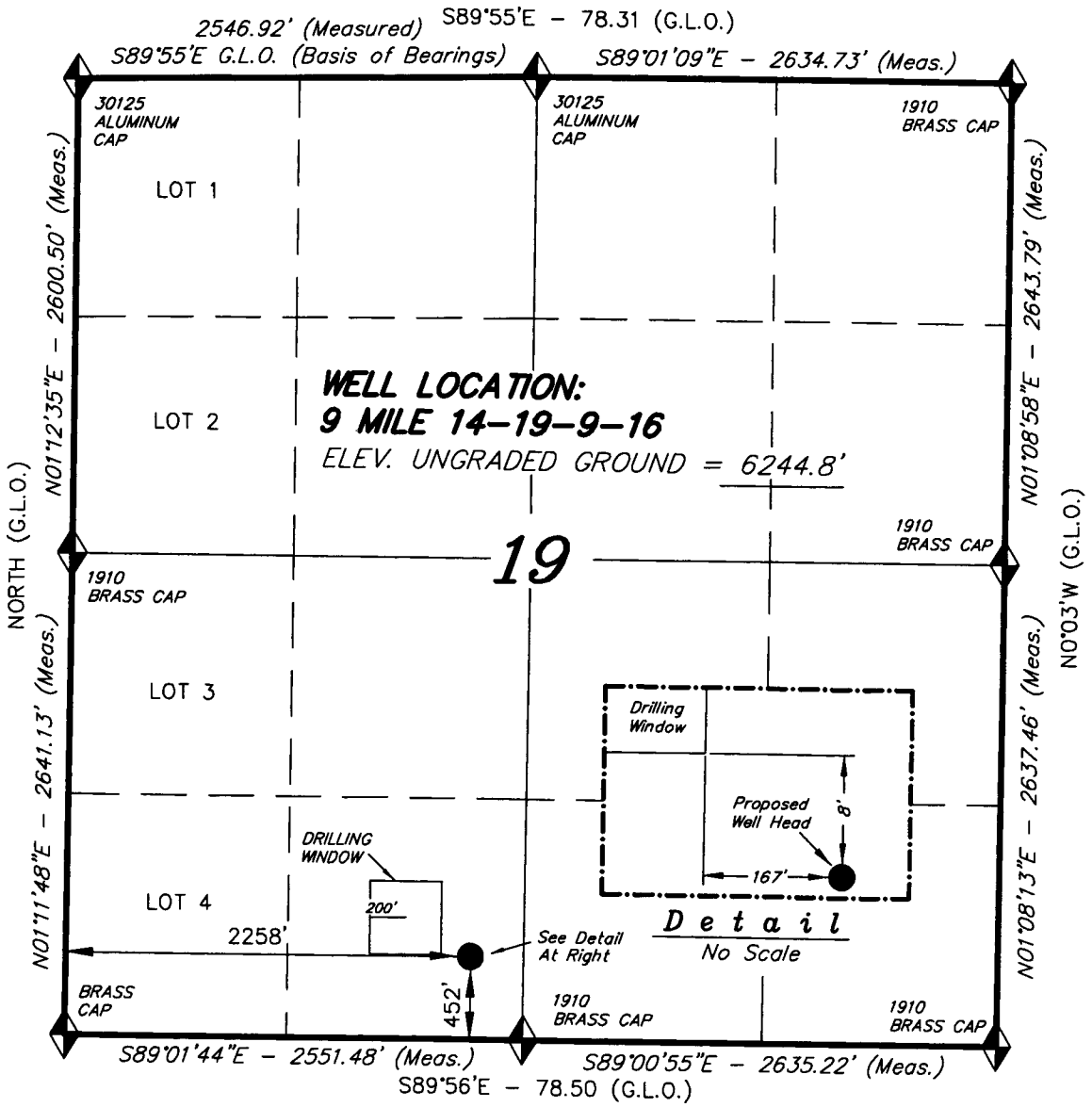

NEWFIELD PRODUCTION COMPANY

WELL LOCATION, 9 MILE 14-19-9-16, LOCATED AS SHOWN IN THE SE 1/4 SW 1/4 OF SECTION 19, T9S, R16E, S.L.B.&M. DUCHESNE COUNTY, UTAH.

1000' 500' 0' 1000'

BAR SCALE

N

THIS IS TO CERTIFY THAT THE ABOVE PLAT WAS PREPARED FROM FIELD NOTES OF ACTUAL SURVEYS MADE BY ME OR UNDER MY SUPERVISION AND THAT THE SAME ARE TRUE AND CORRECT TO THE BEST OF MY KNOWLEDGE AND BELIEF.

REGISTERED LAND SURVEYOR No.189377 STATE OF UTAH

STACY W. STEWART
REGISTERED LAND SURVEYOR
REGISTRATION No. 189377
STATE OF UTAH

◆ = SECTION CORNERS LOCATED

BASIS OF ELEV;
U.S.G.S. 7-1/2 min QUAD (MYTON SW)

9 MILE 14-19-9-16
(Surface Location) NAD 83
LATITUDE = 40° 00' 37.44"
LONGITUDE = 110° 09' 47.26

TRI STATE LAND SURVEYING & CONSULTING
180 NORTH VERNAL AVE. - VERNAL, UTAH 84078
(435) 781-2501

DATE SURVEYED: 4-3-06	SURVEYED BY: C.M.
DATE DRAWN: 4-10-06	DRAWN BY: M.W.
REVISED:	SCALE: 1" = 1000'

NEWFIELD
ROCKY MOUNTAINS

June 1, 2006,

Utah Division of Oil, Gas & Mining
P.O. Box 145801
Attn: Diana Whitney
Salt Lake City, Utah 84114-5801

Re: Exception Locations:
Federal 11-19-9-16; Federal 14-19-9-16; UTU-74391
Federal 10-22-9-16; Federal 15-22-9-16; UTU-74392
Duschene Cty., Utah

Dear Ms. Whitney:

Pursuant to Rule R649-3-3 of the Oil & Gas Rules and Regulations of the State of Utah, Newfield Production Company, Inc. hereby requests an exception location for the drilling of the captioned well. Rule R649-3-2 requires a well to be located in the center of a forty (40) acre quarter-quarter section, or a substantially equivalent lot or tract, with a tolerance of two hundred (200) feet in any direction from the center.

Federal 11-19-9-16; 1778' FSL, 2197'FWL; 1' South, 107' East of drilling window
Federal 14-19-9-16; 452' FSL, 2258' FWL; 8' South, 167' East of drilling window
Federal 10-22-9-16; 1736' FSL, 2137' FEL; 56' South of the drilling window
Federal 15-22-9-16; 355 FSL, 1987' FEL; 109' South of the drilling window

The attached plats depict the proposed drillsite locations and illustrate the deviation from the drilling window, in accordance with Rule R649-3-2. The requested locations have all been selected due to the extreme terrain.

The locations are found within the two federal leases referenced above. The drillsite leases and all surrounding acreage within a four hundred sixty foot (460') radius of the proposed location are owned by Newfield Production Company, Yates Petroleum Corporation, Yates Drilling Company, Myco Industries, Inc. and Abo Petroleum Corporation. We have contacted these owners and their consent to this location is attached.

If you have any questions or need additional information please contact me at (303)-382-4448. Thank you for your assistance in this matter.

Sincerely,
NEWFIELD PRODUCTION COMPANY

Laurie Deseau

Laurie Deseau
Properties Administrator

RECEIVED
JUN 08 2006
DIV. OF OIL, GAS & MINING

Exception Locations
Federal 11-19-9-16; Federal 14-19-9-16; UTU-74391
Federal 10-22-9-16; Federal 15-22-9-16; UTU-74392

Please be advised that Yates Petroleum Corporation, Yates Drilling Company, Myco Industries, Inc. and Abo Petroleum Corporation do not have an objection to the proposed locations of the aforementioned wells.

By: Ernest L. Carroll

Date: May 18, 2006

Ernest L. Carroll, Senior Land Man
Print Name and Title

NEWFIELD

April 25, 2006

State of Utah
Division of Oil, Gas & Mining
Attn: Diana Whitney
1594 West North Temple - Suite 1210
P.O. Box 145801
Salt Lake City, Utah 84114-5801

RE: Applications for Permit to Drill: Federal 7-19-9-16, 10-19-9-16, 11-19-9-16, 14-19-9-16, 15-19-9-16, 16-19-9-16, 15-21-9-16, 16-21-9-16, 10-22-9-16, and 15-22-9-16.

Dear Diana:

Enclosed find APD's on the above referenced wells. The proposed 11-19-9-16, 14-19-9-16, 10-22-9-16, and 15-22-9-16 are all Exception Locations. Our Land Department will send you the required Exception Location Letters. If you have any questions, feel free to give either Shon Mckinnon or myself a call.

Sincerely,

Mandie Crozier

Mandie Crozier
Regulatory Specialist

mc
enclosures

RECEIVED
APR 26 2006
DIV. OF OIL, GAS & MINING

Newfield Exploration Company Route 3 Box 3630 Myton, UT 84052 (435) 646-3721 Fax (435) 646-3031

NEWFIELD PRODUCTION COMPANY
FEDERAL #14-19-9-16
SE/SW SECTION 19, T9S, R16E
DUCHESNE COUNTY, UTAH

ONSHORE ORDER NO. 1

DRILLING PROGRAM

1. ***GEOLOGIC SURFACE FORMATION:***

Uinta formation of Upper Eocene Age

2. ***ESTIMATED TOPS OF IMPORTANT GEOLOGIC MARKERS:***

Uinta	0' – 2330'
Green River	2330'
Wasatch	6040'

3. ***ESTIMATED DEPTHS OF ANTICIPATED WATER, OIL, GAS OR MINERALS:***

Green River Formation 2330' – 6040' - Oil

4. ***PROPOSED CASING PROGRAM***

Please refer to the Monument Butte Field Standard Operation Procedure (SOP).

5. ***MINIMUM SPECIFICATIONS FOR PRESSURE CONTROL:***

Please refer to the Monument Butte Field SOP. See Exhibit "C".

6. ***TYPE AND CHARACTERISTICS OF THE PROPOSED CIRCULATION MUDS:***

Please refer to the Monument Butte Field SOP.

7. ***AUXILIARY SAFETY EQUIPMENT TO BE USED:***

Please refer to the Monument Butte Field SOP.

8. ***TESTING, LOGGING AND CORING PROGRAMS:***

Please refer to the Monument Butte Field SOP.

9. ***ANTICIPATED ABNORMAL PRESSURE OR TEMPERATURE:***

The anticipated maximum bottom hole pressure is 1800 psi. It is not anticipated that abnormal temperatures will be encountered.

10. ***ANTICIPATED STARTING DATE AND DURATION OF THE OPERATIONS:***

Please refer to the Monument Butte Field SOP.

NEWFIELD PRODUCTION COMPANY
FEDERAL #14-19-9-16
SE/SW SECTION 19, T9S, R16E
DUCHESNE COUNTY, UTAH

ONSHORE ORDER NO. 1

MULTI-POINT SURFACE USE & OPERATIONS PLAN

1. EXISTING ROADS

See attached Topographic Map "A"

To reach Newfield Production Company well location site Federal #14-19-9-16 located in the SE 1/4 SW 1/4 Section 19, T9S, R16E, Duchesne County, Utah:

Proceed southwesterly out of Myton, Utah along Highway 40 - 1.6 miles ± to the junction of this highway and UT State Hwy 53; proceed southwesterly – 12.0 miles ± to it's junction with an existing road to the southeast; proceed southeasterly – 0.4 miles ± to it's junction with the beginning of the proposed access road; proceed along the proposed access road – 0.6 miles ± passing the 15-19-9-16 location to the proposed well location.

2. PLANNED ACCESS ROAD

See Topographic Map "B" for the location of the proposed access road.

3. LOCATION OF EXISTING WELLS

Refer to Exhibit "B".

4. LOCATION OF EXISTING AND/OR PROPOSED FACILITIES

All permanent surface equipment will be painted Olive Black.
Please refer to the Monument Butte Field Standard Operating Procedure (SOP).

5. LOCATION AND TYPE OF WATER SUPPLY

Please refer to the Monument Butte Field SOP. See Exhibit "A".

6. SOURCE OF CONSTRUCTION MATERIALS

Please refer to the Monument Butte Field SOP.

7. METHODS FOR HANDLING WASTE DISPOSAL

Please refer to the Monument Butte Field SOP.

8. ANCILLARY FACILITIES

Please refer to the Monument Butte Field SOP.

9. *WELL SITE LAYOUT*

See attached Location Layout Diagram.

10. *PLANS FOR RESTORATION OF SURFACE*

Please refer to the Monument Butte Field SOP.

11. *SURFACE OWNERSHIP* - Bureau Of Land Management (Proposed location and access roads leading to).

12. *OTHER ADDITIONAL INFORMATION*

The Archaeological Resource Survey and Paleontological Resource Survey for this area are attached. MOAC Report #05-225, 7/13/05. Paleontological Resource Survey prepared by, Wade E. Miller, 11/10/05. See attached report cover pages, Exhibit "D".

For the Federal #14-19-9-16 Newfield Production Company requests a 470' ROW be granted in Lease UTU-64379 and 3150' of disturbed area be granted in Lease UTU-74391 to allow for construction of the proposed access road. **Refer to Topographic Map "B".** The proposed access road will be an 18' crown road (9' either side of the centerline) with drainage ditches along either side of the proposed road whether it is deemed necessary in order to handle any run-off from normal meteorological conditions that are prevalent to this area. The maximum grade will be less than 8%. There will be no culverts required along this access road. There will be barrow ditches and turnouts as needed along this road. There are no fences encountered along this proposed road. There will be no new gates or cattle guards required. All construction material for this access road will be borrowed material accumulated during construction of the access road.

Newfield Production Company requests a 470' ROW in Lease UTU-64379 and 3150' of disturbed area be granted in Lease UTU-74391 to allow for construction of the proposed gas lines. It is proposed that the ROW and disturbed area will be 50' wide to allow for construction of a buried 6" gas gathering line, and a buried 3" poly fuel gas line. Both lines will tie in to the existing pipeline infrastructure. **Refer to Topographic Map "C."** For a ROW plan of development, please refer to the Monument Butte Field SOP.

Exceptional Spacing
According to Rule R649-3-2, which governs the location of wells in the State of Utah, Newfield Production is required to request administrative approval for a location exception from all non-unitized lease interest owners within a 460-foot radius of the new proposed location. Our Land Department in Denver has been notified of this exception location and will submit the required Exception Location Letter to all affected lease interest owners.

Water Disposal
Immediately upon first production, all produced water will be confined to a steel storage tank. If the production water meets quality guidelines, it is transported to the Ashley, Monument Butte, Jonah, and Beluga water injection facilities by company or contract trucks. Subsequently, the produced water is injected into approved Class II wells to enhance Newfield's secondary recovery project.

Water not meeting quality criteria, is disposed at Newfield's Pariette #4 disposal well (Sec. 7, T9S R19E) or at State of Utah approved surface disposal facilities.

Threatened, Endangered, And Other Sensitive Species
Golden Eagle: Due to this proposed well access roads proximity (less that 0.5 mile) to an existing inactive golden eagle nest site, no new construction or surface disturbing activities will be allowed between March 1 and May 15. If the nest remains inactive on May 15th (based on a pre-construction survey by a qualified biologist), the operator may construct and drill the location between May 15 and March 1 of the following year. If the nest site becomes active prior to May 15, no new construction or surface disturbing activities will be allowed within 0.5 mile of the nest until the nest becomes inactive for two full breeding seasons. In the event that this well becomes a producing well, it must be equipped with a multi-cylinder engine or hospital muffler to reduce noise levels.

Reserve Pit Liner
A 12 mil liner with felt is required. Please refer to the Monument Butte Field SOP.

Location and Reserve Pit Reclamation
Please refer to the Monument Butte Field SOP.

The following seed mixture will be used on the topsoil stockpile, to the recontoured surface of the reserve pit, and for final reclamation: (All poundages are in pure live seed)

Western Wheatgrass	*Pascopyrum Smithii*	6 lbs/acre
Galletta Grass	*Hilaria Jamesii*	6 lbs/acre

Details of the On-Site Inspection
The proposed Federal #14-19-9-16 was on-sited on 3/17/06. The following were present; Shon Mckinnon (Newfeild Production), Chris Carusona (Bureau of Land Management), and Brandon McDonald (Bureau of Landmanagement). Weather conditions were clear and ground cover was 30% open.

13. LESSEE'S OR OPERATORS REPRESENTATIVE AND CERTIFICATION

Representative

Name: Shon Mckinnon
Address: Route #3 Box 3630
Myton, UT 84052
Telephone: (435) 646-3721

Certification

Please be advised that NEWFIELD PRODUCTION COMPANY is considered to be the operator of well #14-19-9-16 SE/SW Section 19, Township 9S, Range 16E: Lease UTU-74391 Duchesne County, Utah: and is responsible under the terms and conditions of the lease for the operations conducted upon the leased lands. Bond coverage is provided by US Specialty Insurance #B001832.

I hereby certify that the proposed drillsite and access route have been inspected, and I am familiar with the conditions which currently exist; that the statements made in this plan are true and correct to the best of my knowledge; and that the work associated with the operations proposed here will be performed by Newfield Production Company and its contractors and subcontractors in conformity with this plan and the terms and conditions under which it is approved. This statement is subject to the provisions of 18 U.S.C. 1001 for the filing of a false statement.

4/25/06
Date

Mandie Crozier
Regulatory Specialist
Newfield Production Company

NEWFIELD PRODUCTION COMPANY

9 MILE 14-19-9-16

Section 19, T9S, R16E, S.L.B.&M.

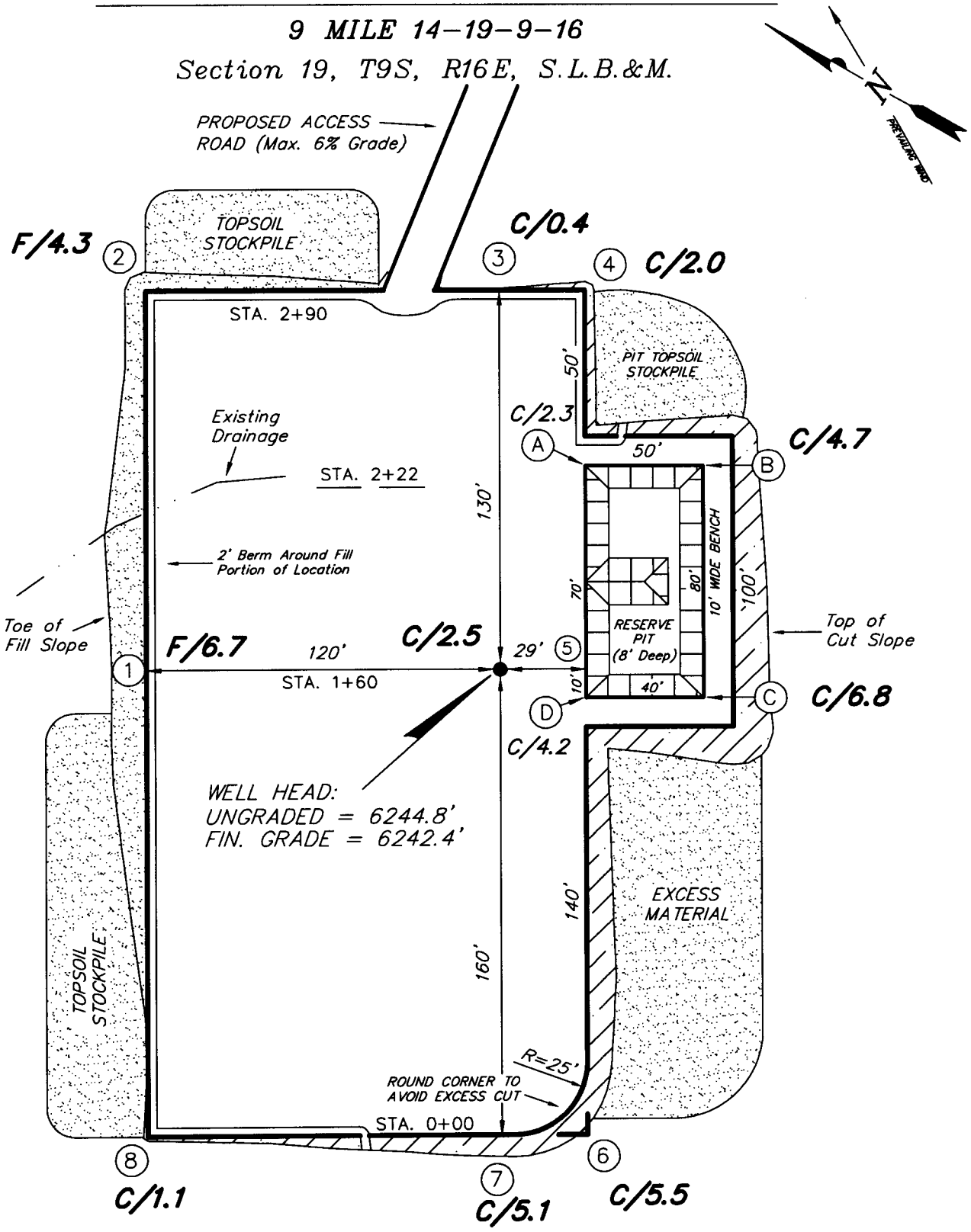

REFERENCE POINTS

170' NORTHWESTERLY = 6228.4'

220' NORTHWESTERLY = 6220.6'

SURVEYED BY:	C.M.	SCALE:	1" = 50'
DRAWN BY:	F.T.M.	DATE:	04-13-06

Tri State Land Surveying, Inc. (435) 781-2501
180 NORTH VERNAL AVE. VERNAL, UTAH 84078

NEWFIELD PRODUCTION COMPANY

CROSS SECTIONS

9 MILE 14-19-9-16

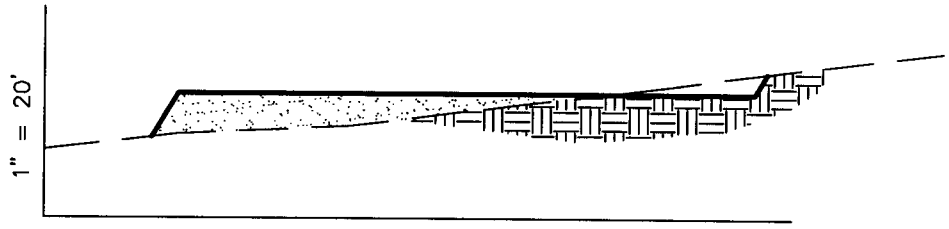

1" = 50'

STA. 2+90

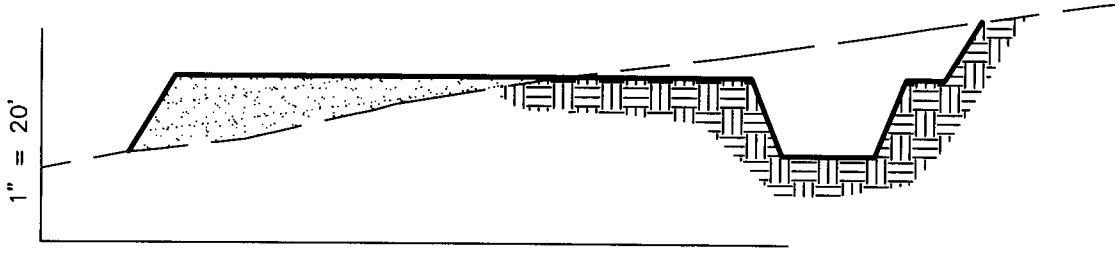

1" = 50'

STA. 2+22

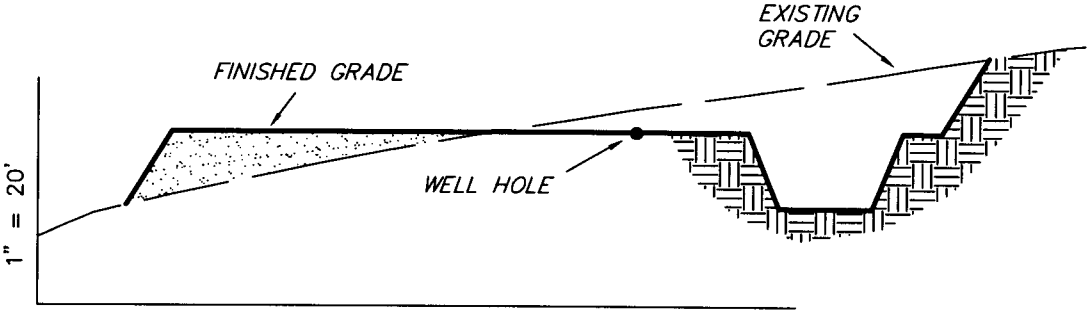

1" = 50'

STA. 1+60

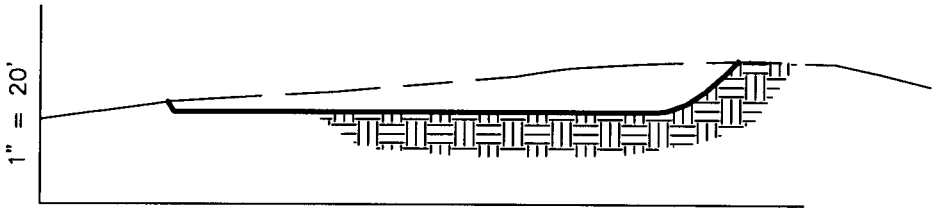

1" = 50'

STA. 0+00

NOTE:
UNLESS OTHERWISE NOTED
ALL CUT/FILL SLOPES ARE
AT 1.5:1

ESTIMATED EARTHWORK QUANTITIES
(No Shrink or swell adjustments have been used)
(Expressed in Cubic Yards)

ITEM	CUT	FILL	6" TOPSOIL	EXCESS
PAD	2,290	2,920	Topsoil is not included in Pad Cut	0
PIT	640	0		640
TOTALS	3,560	2,920	1,020	640

SURVEYED BY:	C.M.	SCALE:	1" = 50'
DRAWN BY:	F.T.M.	DATE:	04-13-06

Tri State Land Surveying, Inc.
(435) 781-2501
180 NORTH VERNAL AVE. VERNAL, UTAH 84078

NEWFIELD PRODUCTION COMPANY

TYPICAL RIG LAYOUT

9 MILE 14-19-9-16

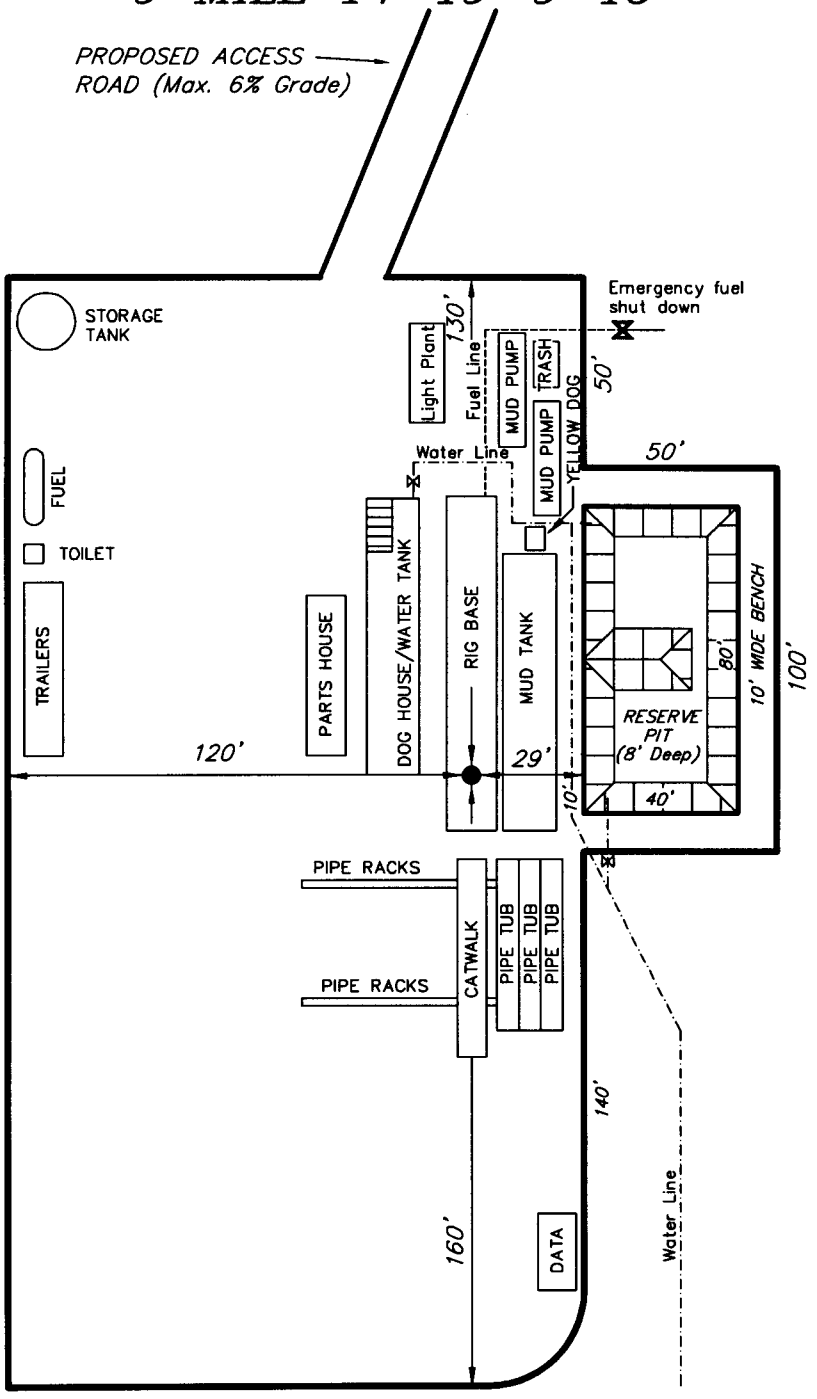

SURVEYED BY:	C.M.	SCALE:	1" = 50'
DRAWN BY:	F.T.M.	DATE:	04-13-06

Tri State Land Surveying, Inc.
(435) 781-2501
180 NORTH VERNAL AVE. VERNAL, UTAH 84078

Newfield Production Company
Proposed Site Facility Diagram

Federal 14-19-9-16

SE/SW Sec. 19, T9S, 16E

Duchesne County, Utah

UTU-74391

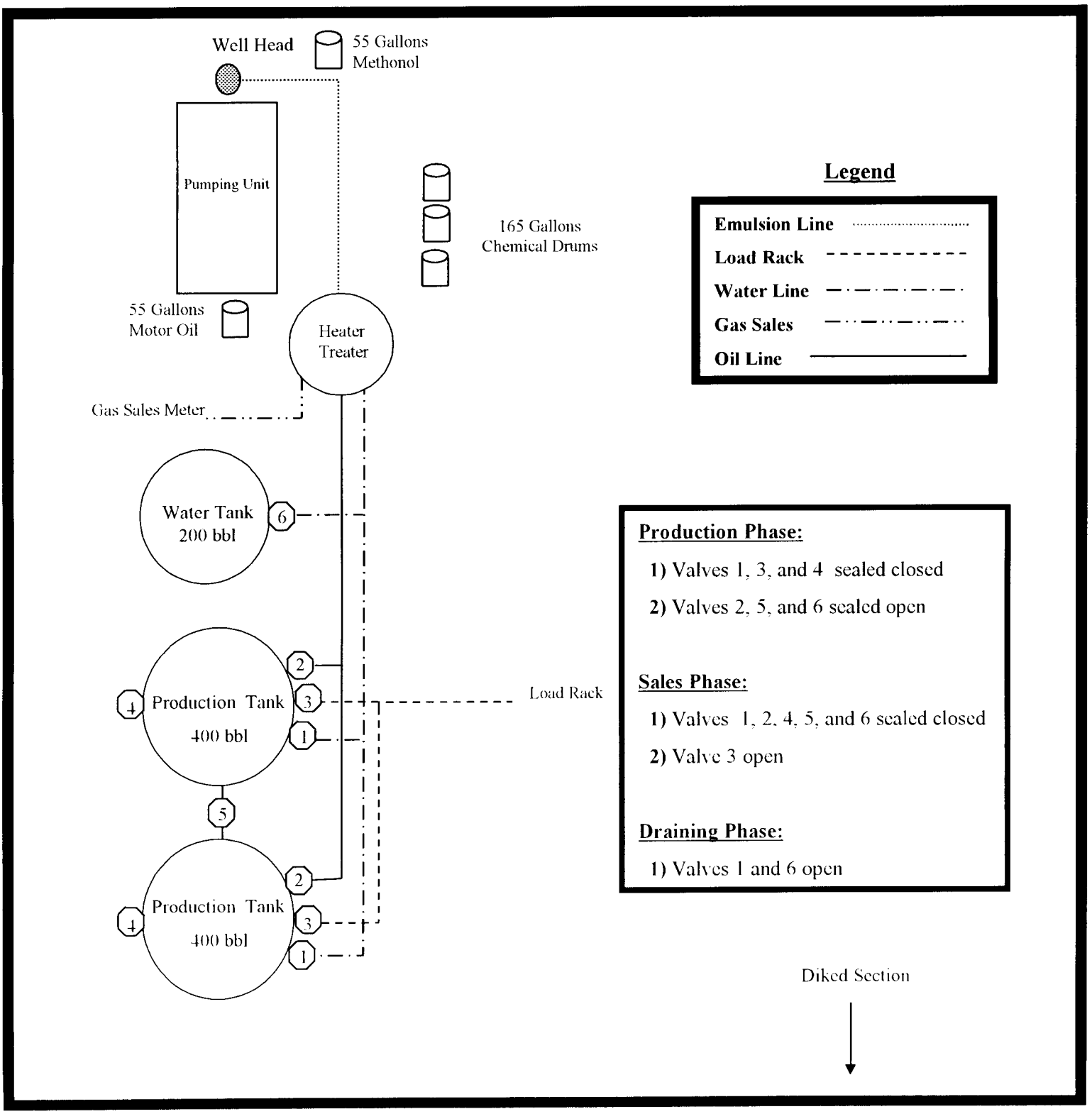

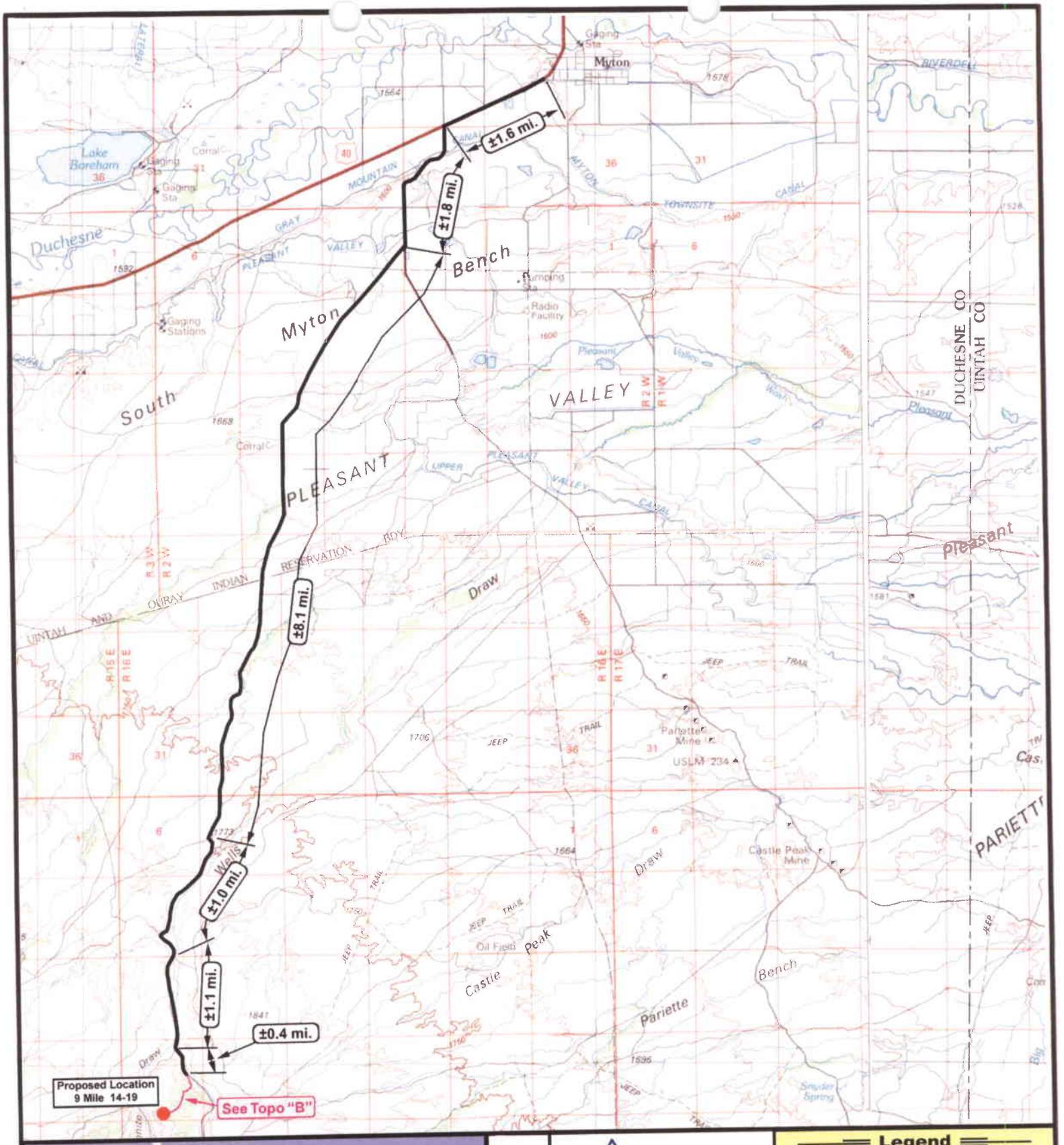

NEWFIELD
Exploration Company

9 Mile 14-19-9-16
SEC. 19, T9S, R16E, S.L.B.&M.

N

Tri-State Land Surveying Inc.
(435) 781-2501
180 North Vernal Ave. Vernal, Utah 84078

SCALE: 1 = 100,000
DRAWN BY: mw
DATE: 04-13-2006

Legend

Existing Road
Proposed Access

TOPOGRAPHIC MAP
"A"

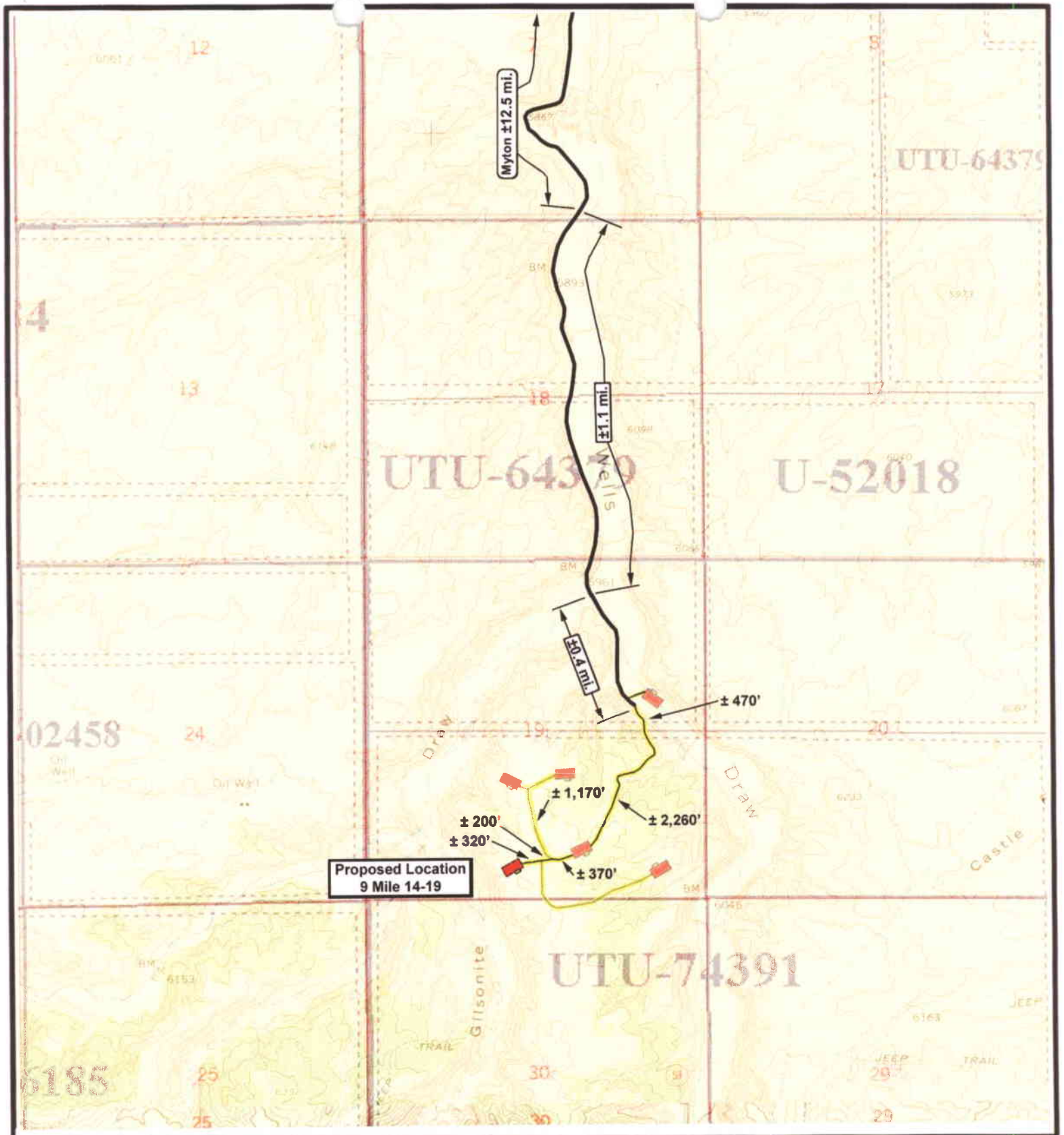

NEWFIELD
Exploration Company

9 Mile 14-19-9-16
SEC. 19, T9S, R16E, S.L.B.&M.

N

Tri-State Land Surveying Inc.
(435) 781-2501
180 North Vernal Ave. Vernal, Utah 84078

SCALE: 1" = 2000'
DRAWN BY: mw
DATE: 04-13-2006

Legend

Existing Road
Proposed Access

TOPOGRAPHIC MAP
"B"

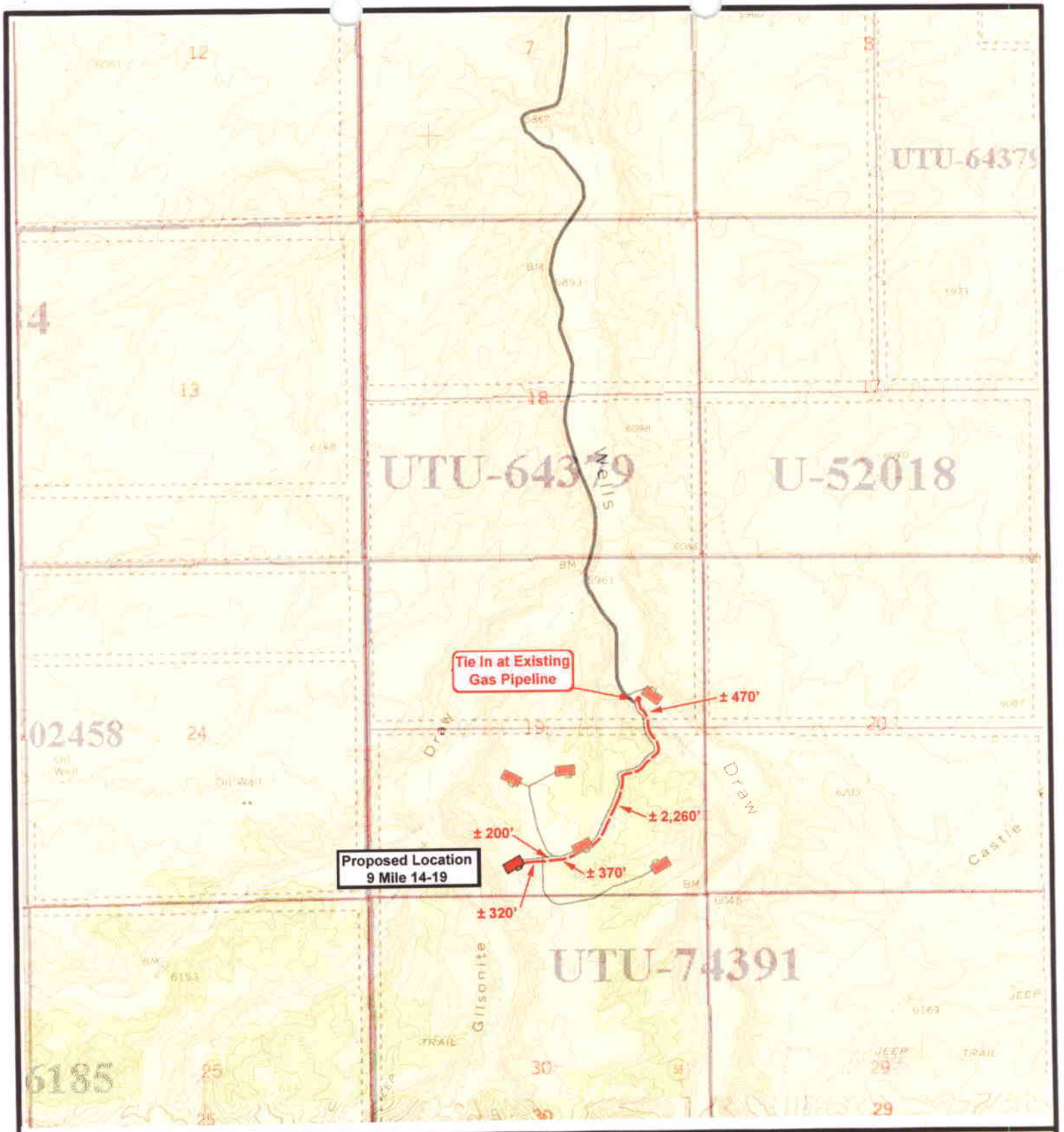

NEWFIELD
Exploration Company

9 Mile 14-19-9-16
SEC. 19, T9S, R16E, S.L.B.&M.

N

Tri-State Land Surveying Inc.
(435) 781-2501
180 North Vernal Ave. Vernal, Utah 84078

SCALE: 1" = 2000'
DRAWN BY: mw
DATE: 04-13-2006

Legend
Roads
Proposed Gas Line

TOPOGRAPHIC MAP
"C"

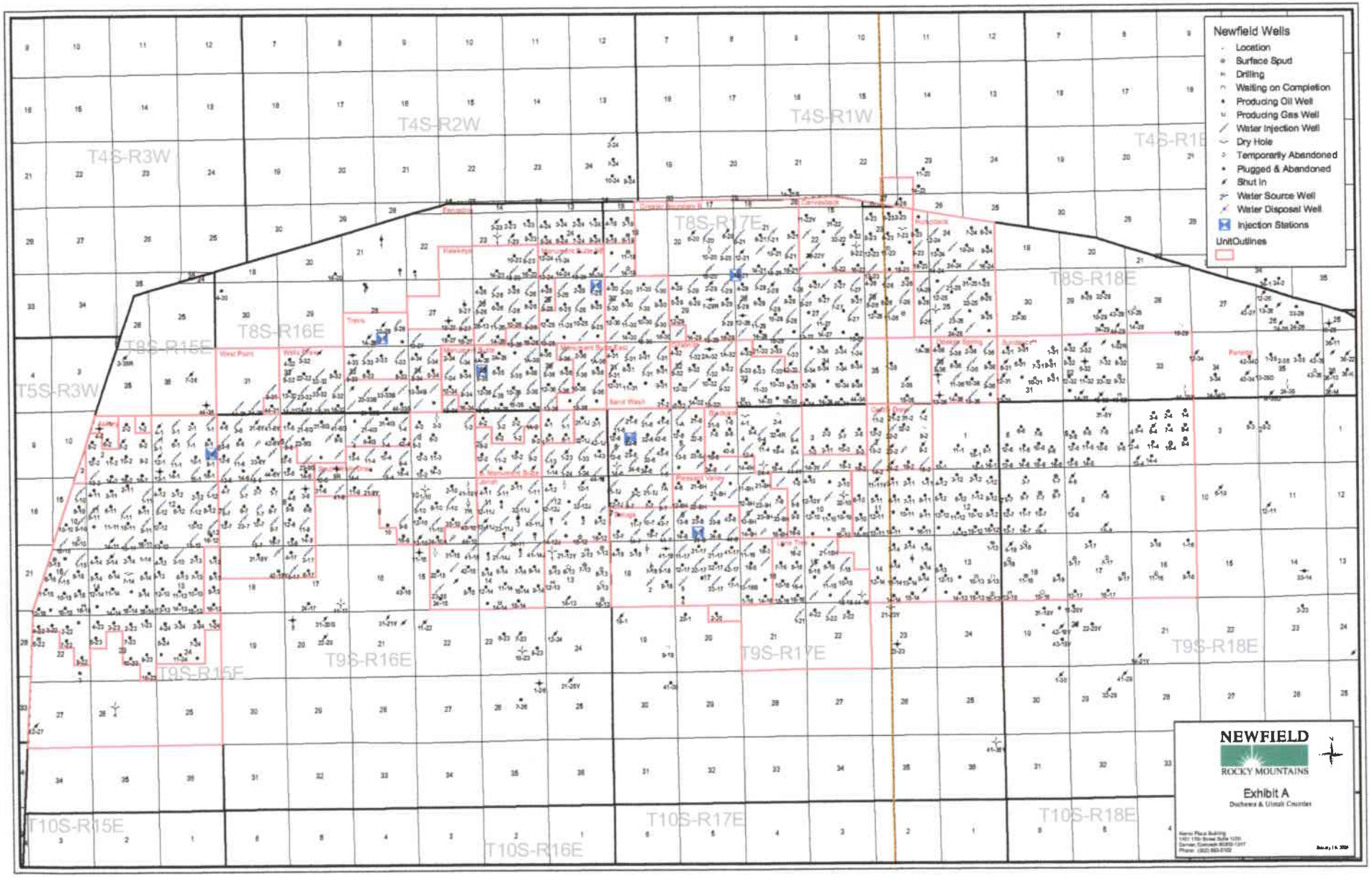
Newfield Wells
Location
Surface Spud
Drilling
Waiting on Completion
Producing Oil Well
Producing Gas Well
Water Injection Well
Dry Hole
Temporarily Abandoned
Plugged & Abandoned
Shut In
Water Source Well
Water Disposal Well
Injection Stations
UnitOutlines
T4S-R3W
T4S-R2W
T4S-R1W
T4S-R1E
T5S-R3W
T8S-R15E
T8S-R16E
T8S-R17E
T8S-R18E
T9S-R15E
T9S-R16E
T9S-R17E
T9S-R18E
T10S-R15E
T10S-R16E
T10S-R17E
T10S-R18E
NEWFIELD
ROCKY MOUNTAINS
Exhibit A
Duchesne & Uintah Counties

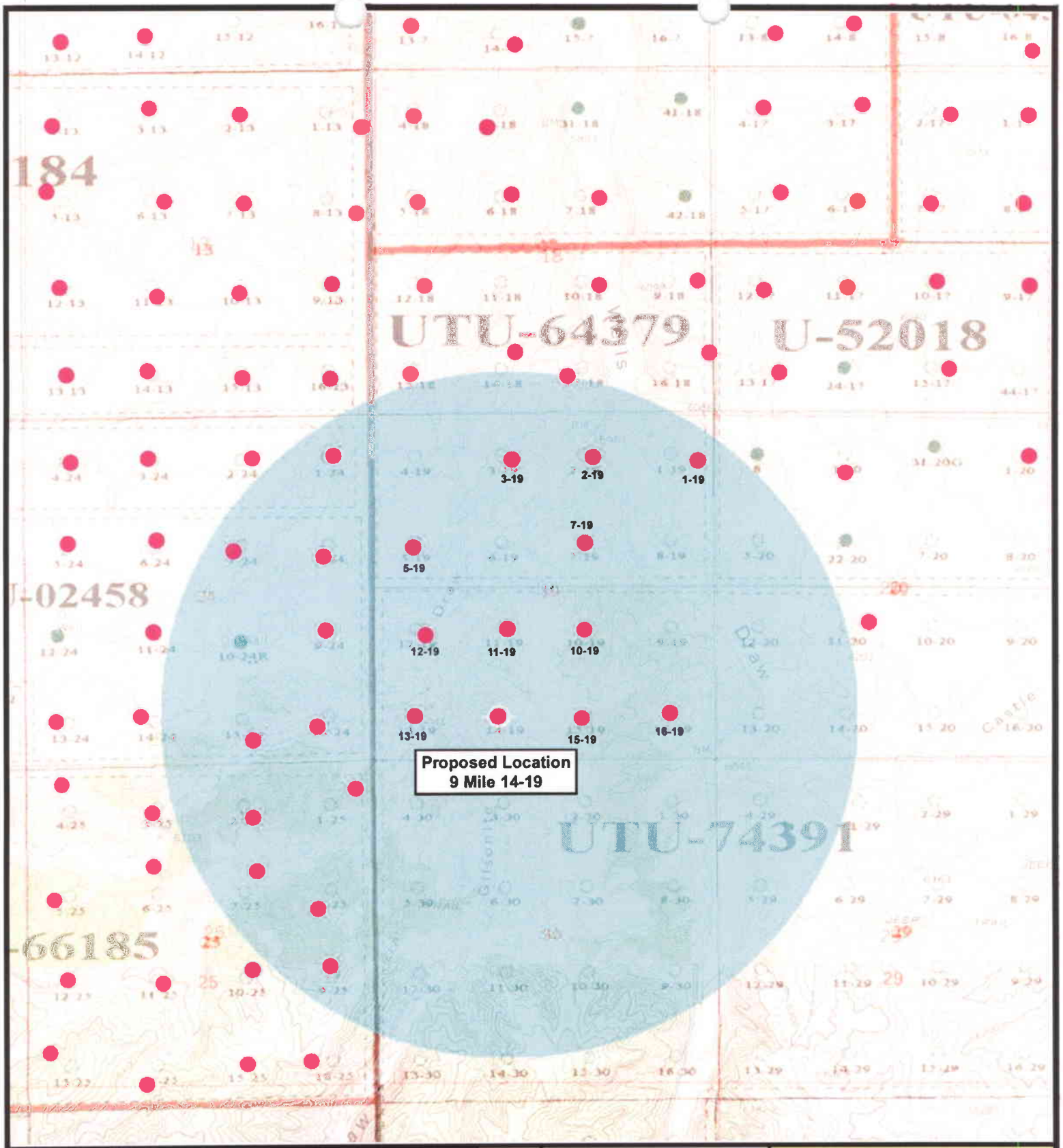

NEWFIELD
Exploration Company

9 Mile 14-19-9-16
SEC. 19, T9S, R16E, S.L.B.&M.

N

Tri-State Land Surveying Inc.
(435) 781-2501
180 North Vernal Ave. Vernal, Utah 84078

SCALE: 1" = 2,000'
DRAWN BY: mw
DATE: 04-13-2006

Legend
Well Locations
One-Mile Radius

Exhibit "B"

2-M SYSTEM

Blowout Prevention Equipment Systems

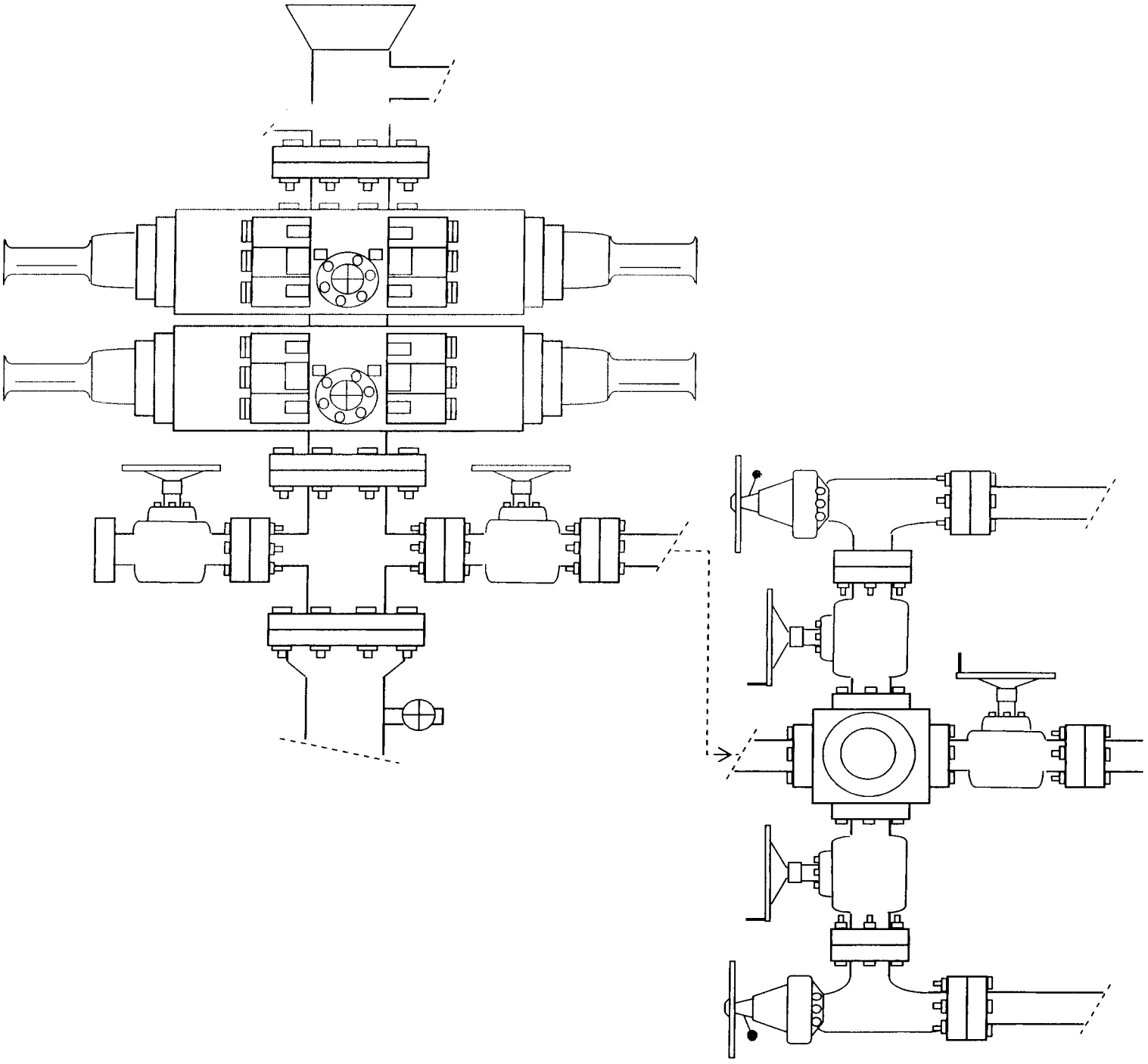

EXHIBIT C

Exhibit "D"
page 1 of 2

CULTURAL RESOURCE INVENTORY OF NEWFIELD EXPLORATION'S BLOCK PARCEL IN TOWNSHIP 9S, RANGE 16E, SECTION 19 AND 20, DUCHESNE COUNTY, UTAH

By:

Shari Maria Silverman

Prepared For:

Bureau fo Land Management
Vernal Field Office

Prepared Under Contract With:

Newfield Exploration Company
Rt. 3 Box 3630
Myton, UT 84052

Prepared By:

Montgomery Archaeological Consultants, Inc.
P.O. Box 147
Moab, Utah 84532

MOAC Report No. 05-225

July 13, 2005

United States Department of Interior (FLPMA)
Permit No. 05-UT-60122

State of Utah Antiquities Project (Survey)
Permit No. U-05-MQ-0668b

NEWFIELD PRODUCTION COMPANY

PALEONTOLOGICAL FIELD SURVEY OF PROPOSED PRODUCTION DEVELOPMENT AREAS, DUCHESNE COUNTY, UTAH

Section 8, T 9 S, R 16 E [SW 1/4 & SE 1/4, NE 1/4; and SE 1/4]; Section 17, T 9 S, R 16 E [NE 1/4; NE 1/4, NW 1/4 & SW 1/4, SE 1/4; NE 1/4, NW 1/4, & SW 1/4, SW 1/4]; Section 19, T 9 S, R 16 E [entire section]; Section 20, T 9 S, R 16 E [excluding NW 1/4, NE 1/4; and NW 1/4 & SE 1/4, NW 1/4]; Section 21, T 9 S, R 16 E [excluding NE 1/4 & NW 1/4, NE 1/4]

REPORT OF SURVEY

Prepared for:

Newfield Production Company

Prepared by:

Wade E. Miller
Consulting Paleontologist
November 10, 2005

WORKSHEET
APPLICATION FOR PERMIT TO DRILL

APD RECEIVED: 04/26/2006

API NO. ASSIGNED: 43-013-33161

WELL NAME: FEDERAL 14-19-9-16
OPERATOR: NEWFIELD PRODUCTION (N2695)
CONTACT: MANDIE CROZIER

PHONE NUMBER: 435-646-3721

PROPOSED LOCATION:
SESW 19 090S 160E
SURFACE: 0452 FSL 2258 FWL
BOTTOM: 0452 FSL 2258 FWL
COUNTY: DUCHESNE
LATITUDE: 40.01049 LONGITUDE: -110.1624
UTM SURF EASTINGS: 571492 NORTHINGS: 4429047
FIELD NAME: MONUMENT BUTTE (105)

INSPECT LOCATN BY: / /

Tech Review	Initials	Date
Engineering		
Geology		
Surface		

LEASE TYPE: 1 - Federal
LEASE NUMBER: UTU-74391
SURFACE OWNER: 1 - Federal

PROPOSED FORMATION: GRRV
COALBED METHANE WELL? NO

RECEIVED AND/OR REVIEWED:

✓ Plat
✓ Bond: Fed[1] Ind[] Sta[] Fee[]
(No. UTB000192)
N Potash (Y/N)
N Oil Shale 190-5 (B) or 190-3 or 190-13
✓ Water Permit
(No. MUNICIPAL)
N RDCC Review (Y/N)
(Date:)
NA Fee Surf Agreement (Y/N)
NA Intent to Commingle (Y/N)

LOCATION AND SITING:

___ R649-2-3.
Unit: ___
___ R649-3-2. General
Siting: 460 From Qtr/Qtr & 920' Between Wells
✓ R649-3-3. Exception
___ Drilling Unit
Board Cause No: ___
Eff Date: ___
Siting: ___
___ R649-3-11. Directional Drill

COMMENTS: Sep, Separate file

STIPULATIONS: 1- Federal Approval
2- Spacing Stip

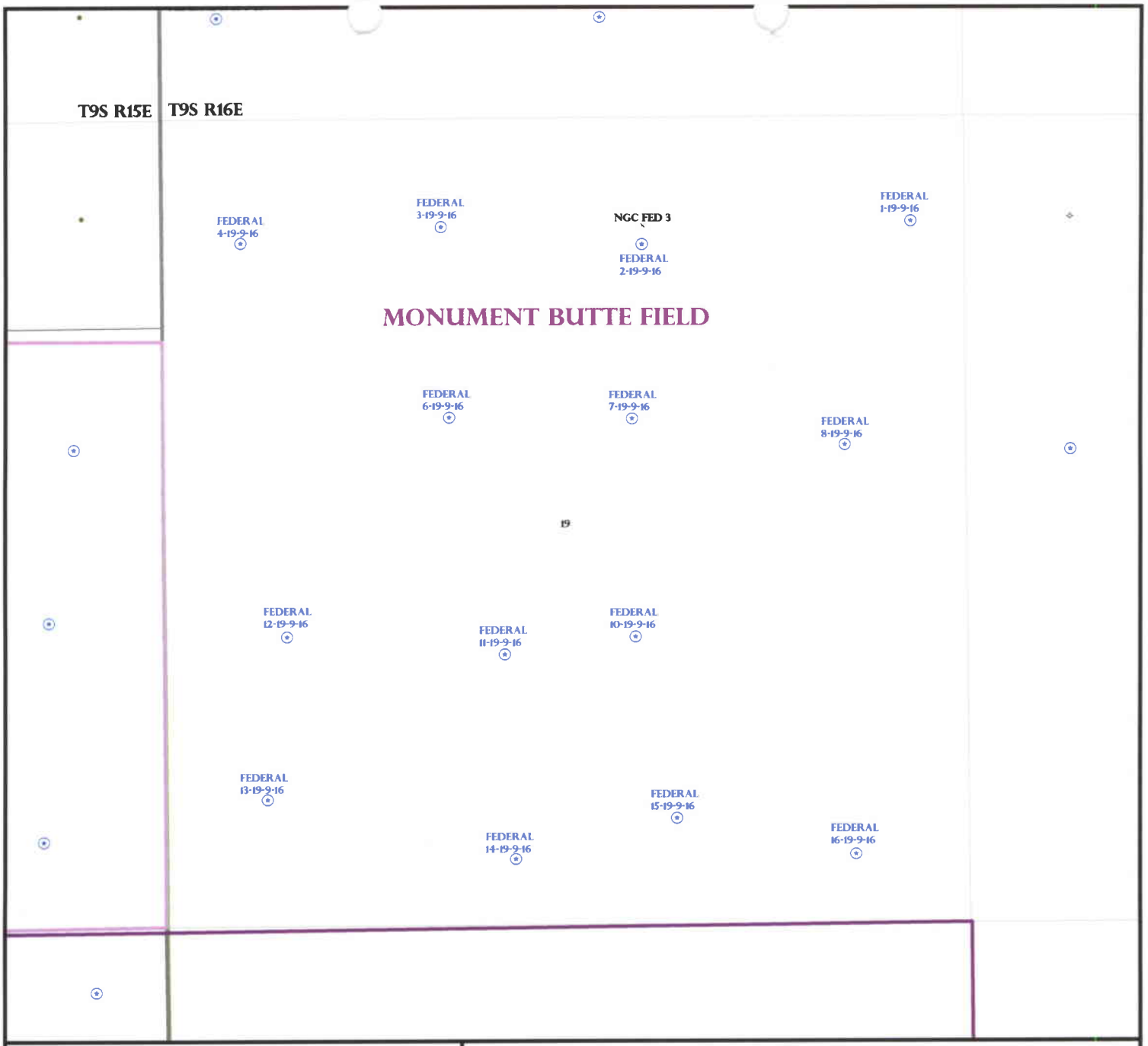

OPERATOR: NEWFIELD PROD CO (N2695)

SEC: 19 **T.** 9S **R.** 16E

FIELD: MONUMENT BUTT (105)

COUNTY: DUCHESNE

SPACING: R649-3-3 / EXCEPTION LOCATION

Field Status
- ABANDONED
- ACTIVE
- COMBINED
- INACTIVE
- PROPOSED
- STORAGE
- TERMINATED

Unit Status
- EXPLORATORY
- GAS STORAGE
- NF PP OIL
- NF SECONDARY
- PENDING
- PI OIL
- PP GAS
- PP GEOTHERML
- PP OIL
- SECONDARY
- TERMINATED

Wells Status
- GAS INJECTION
- GAS STORAGE
- LOCATION ABANDONED
- NEW LOCATION
- PLUGGED & ABANDONED
- PRODUCING GAS
- PRODUCING OIL
- SHUT-IN GAS
- SHUT-IN OIL
- TEMP. ABANDONED
- TEST WELL
- WATER INJECTION
- WATER SUPPLY
- WATER DISPOSAL
- DRILLING

Utah Oil Gas and Mining

N W E S

PREPARED BY: DIANA WHITNEY

DATE: 27-APRIL-2006

State of Utah

Department of Natural Resources

MICHAEL R. STYLER
Executive Director

Division of Oil, Gas & Mining

JOHN R. BAZA
Division Director

JON M. HUNTSMAN, JR.
Governor

GARY R. HERBERT
Lieutenant Governor

June 8, 2006

Newfield Production Company
Rt. 3, Box 3630
Myton, UT 84052

Re: Federal 14-19-9-16 Well, 452' FSL, 2258' FWL, SE SW, Sec. 19, T. 9 South, R. 16 East, Duchesne County, Utah

Gentlemen:

Pursuant to the provisions and requirements of Utah Code Ann.§ 40-6-1 *et seq.*, Utah Administrative Code R649-3-1 *et seq.*, and the attached Conditions of Approval, approval to drill the referenced well is granted.

Appropriate information has been submitted to DOGM and administrative approval of the requested exception location is hereby granted.

This approval shall expire one year from the above date unless substantial and continuous operation is underway, or a request for extension is made prior to the expiration date. The API identification number assigned to this well is 43-013-33161.

Sincerely,

Gil Hunt
Associate Director

pab
Enclosures

cc: Duchesne County Assessor
Bureau of Land Management, Vernal District Office

1594 West North Temple, Suite 1210, PO Box 145801, Salt Lake City, UT 84114-5801
telephone (801) 538-5340 • facsimile (801) 359-3940 • TTY (801) 538-7458 • *www.ogm.utah.gov*

Operator: Newfield Production Company

Well Name & Number Federal 14-19-9-16

API Number: 43-013-33161

Lease: UTU-74391

Location: SE SW **Sec.** 19 **T.** 9 South **R.** 16 East

Conditions of Approval

1. General

   Compliance with the requirements of Utah Admin. R. 649-1 *et seq.*, the Oil and Gas Conservation General Rules, and the applicable terms and provisions of the approved Application for permit to drill.

2. Notification Requirements

   Notify the Division within 24 hours of spudding the well.

   - Contact Carol Daniels at (801) 538-5284.

   Notify the Division prior to commencing operations to plug and abandon the well.

   - Contact Dan Jarvis at (801) 538-5338

3. Reporting Requirements

   All required reports, forms and submittals will be promptly filed with the Division, including but not limited to the Entity Action Form (Form 6), Report of Water Encountered During Drilling (Form 7), Weekly Progress Reports for drilling and completion operations, and Sundry Notices and Reports on Wells requesting approval of change of plans or other operational actions.

4. State approval of this well does not supersede the required federal approval, which must be obtained prior to drilling.

5. This proposed well is located in an area for which drilling units (well spacing patterns) have not been established through an order of the Board of Oil, Gas and Mining (the "Board"). In order to avoid the possibility of waste or injury to correlative rights, the operator is requested, once the well has been drilled, completed, and has produced, to analyze geological and engineering data generated therefrom, as well as any similar data from surrounding areas if available. As soon as is practicable after completion of its analysis, and if the analysis suggests an area larger than the quarter-quarter section upon which the well is located is being drained, the operator is requested to seek an appropriate order from the Board establishing drilling and spacing units in conformance with such analysis by filing a Request for Agency Action with the Board.

DIVISION OF OIL, GAS AND MINING

SPUDDING INFORMATION

Name of Company: **NEWFIELD PRODUCTION COMPANY**

Well Name: **FEDERAL 14-19-9-16**

Api No: **43-013-33161** Lease Type: **FEDERAL**

Section **19** Township **09S** Range **16E** County **DUCHESNE**

Drilling Contractor **NDSI** RIG # **NS#1**

SPUDDED:

Date **01/23/07**

Time **10:00 AM**

How **DRY**

Drilling will Commence:

Reported by **DON BASTIAN**

Telephone # **(435) 823-6012**

Date **01/23/2007** **Signed** **CHD**

STATE OF UTAH
DIVISION OF OIL, GAS AND MINING
ENTITY ACTION FORM -FORM 6

OPERATOR: NEWFIELD PRODUCTION COMPANY
ADDRESS: RT. 3 BOX 3630
MYTON, UT 84052

OPERATOR ACCT. NO. N2695

ACTION CODE	CURRENT ENTITY NO.	NEW ENTITY NO.	API NUMBER	WELL NAME	QQ	SC	TP	RG	COUNTY	SPUD DATE	EFFECTIVE DATE
B	99999	14844 ✓	4304735476	SUNDANCE FEDERAL 15-4-9-18	SW/SE	4	9S	18E		1/18/2007	1/25/07

WELL 1 COMMENTS: GRRV

ACTION CODE	CURRENT ENTITY NO.	NEW ENTITY NO.	API NUMBER	WELL NAME	QQ	SC	TP	RG	COUNTY	SPUD DATE	EFFECTIVE DATE
A	99999	15897	4301332161	FEDERAL 14-19-9-16	SE/SW	19	9S	16E		01/23/07	1/25/07

GRRV 33161

ACTION CODE	CURRENT ENTITY NO.	NEW ENTITY NO.	API NUMBER	WELL NAME	QQ	SC	TP	RG	COUNTY	SPUD DATE	EFFECTIVE DATE

ACTION CODE	CURRENT ENTITY NO.	NEW ENTITY NO.	API NUMBER	WELL NAME	QQ	SC	TP	RG	COUNTY	SPUD DATE	EFFECTIVE DATE

ACTION CODE	CURRENT ENTITY NO.	NEW ENTITY NO.	API NUMBER	WELL NAME	QQ	SC	TP	RG	COUNTY	SPUD DATE	EFFECTIVE DATE

WELL 5 COMMENTS:

ACTION CODE	CURRENT ENTITY NO.	NEW ENTITY NO.	API NUMBER	WELL NAME	QQ	SC	TP	RG	COUNTY	SPUD DATE	EFFECTIVE DATE

WELL 6 COMMENTS:

ACTION CODES (See instructions on back of form)
A - Establish new entity for new well (single well only)
B - Add new well to existing entity (group or unit well)
C - Re-assign well from one existing entity to another existing entity
D - Re-assign well from one existing entity to a new entity
E - Other (explain in comments section)

NOTE: Use COMMENT section to explain why each Action Code was selected.

Lana Nebeker
Signature
LANA NEBEKER

Production Clerk
Title

January 24, 2007
Date

RECEIVED
JAN 2 4 2007
DIV. OF OIL, GAS & MINING

FORM 3160-5
(September 2001)

UNITED STATES
DEPARTMENT OF THE INTERIOR
BUREAU OF LAND MANAGEMENT

FORM APPROVED
OMB No. 1004-0135
Expires January 31,2004

SUNDRY NOTICES AND REPORTS ON WELLS

Do not use this form for proposals to drill or to re-enter an abandoned well. Use Form 3160-3 (APD) for such proposals.

5. Lease Serial No.
USA UTU-74391

6. If Indian, Allottee or Tribe Name.

7. If Unit or CA/Agreement, Name and/or

1. Type of Well
☒ Oil Well ☐ Gas Well ☐ Other

8. Well Name and No.
FEDERAL 14-19-9-16

2. Name of Operator
NEWFIELD PRODUCTION COMPANY

9. API Well No.
4301333161

3a. Address Route 3 Box 3630
Myton, UT 84052

3b. Phone *(include are code)*
435.646.3721

10. Field and Pool, or Exploratory Area
MONUMENT BUTTE

4. Location of Well *(Footage, Sec., T., R., M., or Survey Description)*
452 FSL 2258 FWL

SESW Section 19 T9S R16E

11. County or Parish, State
DUCHESNE, UT

12. CHECK APPROPRIATE BOX(ES) TO INIDICATE NATURE OF NOTICE, OR OTHER DATA

TYPE OF SUBMISSION	TYPE OF ACTION			
☐ Notice of Intent	☐ Acidize	☐ Deepen	☐ Production(Start/Resume)	☐ Water Shut-Off
☒ Subsequent Report	☐ Alter Casing	☐ Fracture Treat	☐ Reclamation	☐ Well Integrity
☐ Final Abandonment	☐ Casing Repair	☐ New Construction	☐ Recomplete	☒ Other Spud Notice
	☐ Change Plans	☐ Plug & Abandon	☐ Temporarily Abandon	
	☐ Convert to	☐ Plug Back	☐ Water Disposal	

13. Describe Proposed or Completed Operation (clearly state all pertinent details, including estimated starting date of any proposed work and approximate duration thereof. If the proposal is to deepen directionally or recomplete horizontally, give subsurface locations and measured and true vertical depths of all pertinent markers and zones. Attach the Bond under which the work will be performed or provide the Bond No. on file with BLM/BIA. Required subsequent reports shall be filed within 30 days following completion of the involved operations. If the operation results in a multiple completion or recompletion in a new interval, a Form 3160-4 shall be filed once testing has been completed. Final Abandonment Notices shall be filed only after all requirements, including reclamation, have been completed, and the operator has determined that the site is ready for final inspection.)

On 1/21/07 MIRU NDSI NS # 1. Spud well @ 10:00 AM. Drill 320' of 12 1/4" hole with air mist. TIH W/ 7 Jt's 8 5/8" J-55 24 # csgn. Set @ 322 KB. On 1/26/07 cement with 160 sks of class "G" w/ 3% CaCL2 + 1/4# sk Cello- Flake Mixed @ 15.8 ppg > 1.17 cf/ sk yeild. Returned 2.25 bbls cement to pit. Cement fell to 61'. On 1/27/07 top off with 12.7 bbls of cement. Cement did not fall. Top off job was successful. WOC.

I hereby certify that the foregoing is true and correct *(Printed/ Typed)*
Justin Crum

Title
Drilling Foreman

Signature
Justin Crum

Date
02/17/2007

Approved by

Title

Date

Conditions of approval, if any, are attached. Approval of this notice does not warrant or certify that the applicant holds legal or equitable title to those rights in the subject lease which would entitle the applicant to conduct operations thereon.

Office

Title 18 U.S.C. Section 1001 and Title 43 U.S.C. Section 1212, make it a crime for any person knowingly and willfully to make to any department or agency of the United States any false, fictitious and fraudulent statements or representations as to any matter within its jurisdiction

(Instructions on reverse)

RECEIVED
FEB 2 2 2007
DIV. OF OIL, GAS & MINING

NEWFIELD PRODUCTION COMPANY - CASING & CEMENT REPORT

8 5/8 CASING SET AT 322.44

LAST CASING 8 5/8" set @ 322.44
DATUM 12' KB
DATUM TO CUT OFF CASING
DATUM TO BRADENHEAD FLANGE
TD DRILLER 320' LOGGER
HOLE SIZE 12 1/4

OPERATOR Newfield Production Company
WELL Federal 14-19-9-16
FIELD/PROSPECT Monument Butte
CONTRACTOR & RIG # NDSI NS # 1

LOG OF CASING STRING:

PIECES	OD	ITEM - MAKE - DESCRIPTION	WT / FT	GRD	THREAD	CONDT	LENGTH
		Shoe Joint 44.61'					
		WHI - 92 csg head			8rd	A	0.95
7	8 5/8"	Maverick ST&C csg	24#	J-55	8rd	A	310.59
		GUIDE shoe			8rd	A	0.9

CASING INVENTORY BAL.	FEET	JTS
TOTAL LENGTH OF STRING	312.44	7
LESS NON CSG. ITEMS	1.85	
PLUS FULL JTS. LEFT OUT	0	
TOTAL	310.59	7
TOTAL CSG. DEL. (W/O THRDS)	310.59	7
TIMING	1ST STAGE	
BEGIN RUN CSG. Spud	1/23/2007	10:00 AM
CSG. IN HOLE	1/23/2007	3:30 PM
BEGIN CIRC	1/25/2007	8:42 AM
BEGIN PUMP CMT	1/25/2007	9:02 AM
BEGIN DSPL. CMT	1/25/2007	9:12 AM
PLUG DOWN	1/25/2007	9:21 AM

TOTAL LENGTH OF STRING	312.44
LESS CUT OFF PIECE	2
PLUS DATUM TO T/CUT OFF CSG	12
CASING SET DEPTH	322.44

} COMPARE

GOOD CIRC THRU JOB yes
Bbls CMT CIRC TO SURFACE 2.25
RECIPROCATED PIPE FOR N/A
BUMPED PLUG TO 700 PSI

CEMENT USED		CEMENT COMPANY- B. J.
STAGE	# SX	CEMENT TYPE & ADDITIVES
1	160	Class "G" w/ 2% CaCL2 + 1/4#/sk Cello-Flake mixed @ 15.8 ppg 1.17 cf/sk yield

CENTRALIZER & SCRATCHER PLACEMENT	SHOW MAKE & SPACING
Centralizers - Middle first, top second & third for 3	

COMPANY REPRESENTATIVE Justin Crum DATE 1/27/2007

RECEIVED

APR 2 6 2006

Form 3160-3
(September 2001)

FORM APPROVED
OMB No. 1004-0136
Expires January 31, 2004

UNITED STATES
DEPARTMENT OF THE INTERIOR
BUREAU OF LAND MANAGEMENT

APPLICATION FOR PERMIT TO DRILL OR REENTER

5. Lease Serial No.
UTU-74391

6. If Indian, Allottee or Tribe Name
N/A

7. If Unit or CA Agreement, Name and No.
N/A

8. Lease Name and Well No.
Federal 14-19-9-16

1a. Type of Work: [X] DRILL [ ] REENTER

1b. Type of Well: [X] Oil Well [ ] Gas Well [ ] Other [X] Single Zone [ ] Multiple Zone

2. Name of Operator
Newfield Production Company

9. API Well No.
43-013-33161

3a. Address
Route #3 Box 3630, Myton UT 84052

3b. Phone No. *(include area code)*
(435) 646-3721

10. Field and Pool, or Exploratory
Monument Butte

4. Location of Well *(Report location clearly and in accordance with any State requirements.*)*
At surface SE/SW 452' FSL 2258' FWL
At proposed prod. zone

11. Sec., T., R., M., or Blk. and Survey or Area
SE/SW Sec. 19, T9S R16E

14. Distance in miles and direction from nearest town or post office*
Approximatley 14.9 miles southwest of Myton, Utah

12. County or Parish
Duchesne

13. State
UT

15. Distance from proposed* location to nearest property or lease line, ft. (Also to nearest drig. unit line, if any) Approx. 2188' f/lse, NA f/unit

16. No. of Acres in lease
2139.50

17. Spacing Unit dedicated to this well
40 Acres

18. Distance from proposed location* to nearest well, drilling, completed, applied for, on this lease, ft. Approx. 1387'

19. Proposed Depth
6040'

20. BLM/BIA Bond No. on file
UTB000192

21. Elevations (Show whether DF, KDB, RT, GL, etc.)
6245' GL

22. Approximate date work will start*
3rd Quarter 2006

23. Estimated duration
Approximately seven (7) days from spud to rig release.

24. Attachments

The following, completed in accordance with the requirements of Onshore Oil and Gas Order No.1, shall be attached to this form:

1. Well plat certified by a registered surveyor.
2. A Drilling Plan.
3. A Surface Use Plan (if the location is on National Forest System Lands, the SUPO shall be filed with the appropriate Forest Service Office).
4. Bond to cover the operations unless covered by an existing bond on file (see Item 20 above).
5. Operator certification.
6. Such other site specific information and/or plans as may be required by the authorized officer.

RECEIVED
JAN 3 0 2007
DIV. OF OIL, GAS & MINING

25. Signature: Mandie Crozier
Name (Printed/Typed): Mandie Crozier
Date: 4/25/06

Title: Regulatory Specialist

Approved by (Signature): Jerry Kenczka
Name (Printed/Typed): Jerry Kenczka
Date: 1-5-2007

Title: Assistant Field Manager Lands & Mineral Resources
Office: VERNAL FIELD OFFICE

Application approval does not warrant or certify that the applicant holds legal or equitable title to those rights in the subject lease which would entitle the applicant to conduct operations thereon.
Conditions of approval, if any, are attached.

CONDITIONS OF APPROVAL ATTACHED

Title 18 U.S.C. Section 1001 and Title 43 U.S.C. Section 1212, make it a crime for any person knowingly and willfully to make to any department or agency of the United States any false, fictitious or fraudulent statements or representations as to any matter within its jurisdiction.

(Instructions on reverse)

Accepted by the
Utah Division of
Oil, Gas and Mining
FOR RECORD ONLY

NOTICE OF APPROVAL

UDOGM

No NOS

07BM4001A

UNITED STATES DEPARTMENT OF THE INTERIOR
BUREAU OF LAND MANAGEMENT
VERNAL FIELD OFFICE
170 South 500 East VERNAL, UT 84078 (435) 781-4400

CONDITIONS OF APPROVAL FOR APPLICATION FOR PERMIT TO DRILL

Company:	**Newfield Production Company**	**Location:**	**SESW, Sec 19, T9S, R16E**
Well No:	**Federal 14-19-9-16**	**Lease No:**	**UTU-74391**
API No:	**43-013-33161**	**Agreement:**	**N/A**

Petroleum Engineer:	Matt Baker	Office: 435-781-4490	Cell: 435-828-4470
Petroleum Engineer:	Michael Lee	Office: 435-781-4432	Cell: 435-828-7875
Petroleum Engineer:	Jim Ashley	Office: 435-781-4470	
Supervisory Petroleum Technician:	Jamie Sparger	Office: 435-781-4502	Cell: 435-828-3913
Environmental Scientist:	Paul Buhler	Office: 435-781-4475	Cell: 435-828-4029
Environmental Scientist:	Karl Wright	Office: 435-781-4484	
Natural Resource Specialist:	Holly Villa	Office: 435-781-4404	
Natural Resource Specialist:	Melissa Hawk	Office: 435-781-4476	
Natural Resource Specialist:	Chuck Macdonald	Office: 435-781-4441	
Natural Resource Specialist:	Darren Williams	Office: 435-781-4447	
Natural Resource Specialist:	Verlyn Pindell	Office: 435-781-3402	
After Hours Contact Number: 435-781-4513		Fax: 435-781-4410	

A COPY OF THESE CONDITIONS SHALL BE FURNISHED TO YOUR FIELD REPRESENTATIVE TO INSURE COMPLIANCE

All lease and/or unit operations are to be conducted in such a manner that full compliance is made with the applicable laws, regulations (43 CFR Part 3160), and this approved Application for Permit to Drill including Surface and Downhole Conditions of Approval. The operator is considered fully responsible for the actions of his subcontractors. A copy of the approved APD must be on location during construction, drilling, and completion operations. **This permit is approved for a one-year period. An additional year extension may be applied for by sundry notice prior to expiration.**

NOTIFICATION REQUIREMENTS

Location Construction (Notify Chuck Macdonald)	-	Forty-Eight (48) hours prior to construction of location and access roads.
Location Completion (Notify Chuck Macdonald)	-	Prior to moving on the drilling rig.
Spud Notice (Notify Petroleum Engineer)	-	Twenty-Four (24) hours prior to spudding the well.
Casing String & Cementing (Notify Jamie Sparger)	-	Twenty-Four (24) hours prior to running casing and cementing all casing strings.
BOP & Related Equipment Tests (Notify Jamie Sparger)	-	Twenty-Four (24) hours prior to initiating pressure tests.
First Production Notice (Notify Petroleum Engineer)	-	Within Five (5) business days after new well begins or production resumes after well has been off production for more than ninety (90) days.

SURFACE USE PROGRAM
CONDITIONS OF APPROVAL (COAs)

Specific Wildlife Conditions of Approval

1. No surface occupancy is allowed (does not apply to casual use) within ½ mile of golden eagle nests which have been active within the past two years. This restriction will not apply to maintenance and operation of existing programs and facilities. It will not apply if impacts can be mitigated through other management actions or site specific analysis of terrain features. Protection of golden eagle nest sites as described in the Diamond Mountain RMP and EIS. Waivers, exceptions, or modifications to this limitation may be specifically approved in writing by the authorized officer of the Bureau of Land Management if either the resource values change or the lessee/operator demonstrates that adverse impacts can be mitigated. Any changes to this stipulation will be made in accordance with the land use plan and/or the regulatory provisions for such changes. (For guidance on the application of this stipulation, see BLM Manual 1624 and 3101 or FS Manual 1950 and 2820).

2. There are three Golden Eagle nests located next to each other and approximately .25 miles east of the proposed access road, but are not in line-of-sight. With this occurrence there will be a time restriction to protect Golden Eagle nesting from Feb.1 - July15.

3. No surface use is allowed within crucial deer and elk winter range during Dec. 1-Apr.30. This stipulation does not apply to operation and maintenance of production facilities or if animals are not present. As described in the Diamond Mountain Resource Management Plan and EIS, activities that will cause significant displacement of deer or elk herds or loss of habitat are prohibited. Waivers, exceptions, or modifications to this limitation may be specifically approved in writing by the authorized officer of the BLM if either the resource values change or the lessee/operator demonstrates that adverse impacts can be mitigated. Any changes to this stipulation will be made in accordance with the land use plan and/or the regulatory provisions for such changes.

General Conditions of Approval

1. Pipelines will be buried at all major drainage crossings.

2. Low-water crossings will be appropriately constructed to avoid sedimentation of drainageways and other water resources.

3. A 12 mil liner with felt will be installed at reserve pit.

4. If paleontologic or cultural materials are uncovered during construction, the operator shall immediately stop work that might further disturb or move such materials and contact the Authorized Officer (AO) within 48 hours. A determination will be made by the AO as to necessary migitation for the discovered paleontologic/cultural material.

5. If Uinta Basin hookless cactus or other special status plants are found, construction will cease and the AO will be notified to determine the appropriate mitigation.

6. The interim seed mix for this location shall be:

Western wheatgrass (*Agropyron smithii*):	6 lbs/acre
Galleta grass (*Hilaria jamesii*):	6lbs/acre

- All pounds are in pure live seed.
- Rates are set for drillseeding; double the rate if broadcasting.
- Reseeding may be required if initial seeding is not successful.

7. The operator will be responsible for treatment and control of invasive and noxious weeds.

8. The topsoil from the reserve pit shall be stripped and piled separately near the reserve pit. When the reserve pit is closed, it shall be recontoured and the topsoil respread, and the area shall be seeded in the same manner as the location topsoil.

9. Once the location is plugged and abandoned, it shall be recontoured to natural topology, topsoil shall be respread where appropriate, and the entire location shall be seeded with a seed mix recommended by the AO (preferably of native origin). Seeding shall take place by broadcasting the seed and walking it into the soil with a dozer immediately after the dirt work is completed.

10. The authorized officer may prohibit surface disturbing activities during severe winter conditions to minimize watershed damage. This limitation does not apply to operation and maintenance of producing wells.

11. The authorized officer may prohibit surface disturbing activities during wet or muddy conditions to minimize watershed damage. This limitation does not apply to operation and maintenance of producing wells.

DOWNHOLE CONDITIONS OF APPROVAL

All provisions outlined in Onshore Oil & Gas Order #2 Drilling Operations shall be strictly adhered to. The following items are emphasized:

SITE SPECIFIC DOWNHOLE CONDITIONS OF APPROVAL

1. Production casing cement shall be brought up and into the surface.

DRILLING/COMPLETION/PRODUCING OPERATING STANDARDS

1. There shall be no deviation from the proposed drilling, completion, and/or workover program as approved. Safe drilling and operating practices must be observed. All wells, whether drilling, producing, suspended, or abandoned, shall be identified in accordance with 43 CFR 3162.6. There shall be a sign or marker with the name of the operator, lease serial number, well number, and surveyed description of the well. Any changes in operation must have prior approval from the BLM, Vernal Field Office Petroleum Engineers.

2. The spud date and time shall be reported orally to Vernal Field Office within 24 hours of spudding.

3. **Notify Vernal Field Office Supervisory Petroleum Engineering Technician at least 24 hours in advance of casing cementing operations and BOPE & casing pressure tests.**

4. Blowout prevention equipment (BOPE) shall remain in use until the well is completed or abandoned. Closing unit controls shall remain unobstructed and readily accessible at all times. Choke manifolds shall be located outside of the rig substructure.

   All BOPE components shall be inspected daily and those inspections shall be recorded in the daily drilling report. Components shall be operated and tested as required by Onshore Oil & Gas Order No. 2 to insure good mechanical working order. All BOPE pressure tests shall be performed by a test pump with a chart recorder and **NOT** by the rig pumps. Test shall be reported in the driller's log.

   BOP drills shall be initially conducted by each drilling crew within 24 hours of drilling out from under the surface casing and weekly thereafter as specified in Onshore Oil & Gas Order No. 2.

   Casing pressure tests are required before drilling out from under all casing strings set and cemented in place.

   No aggressive/fresh hard-banded drill pipe shall be used within casing.

5. The lessee/operator must report all shows of water or water-bearing sands to the BLM. If flowing water is encountered it must be sampled and analyzed (a copy of the analyses to be submitted to the BLM Field Office in Vernal, Utah).

6. All oil and gas shows shall be adequately tested for commercial possibilities, reported, and protected.

7. The lessee/operator must report encounters of all non oil and gas mineral resources (such as gilsonite, tar sands, oil shale, etc.) to Peter Sokolosky or another geologist of the Vernal Field Office in writing within 5 working days of each encounter. Each report shall include the well name/number, well location, date and depth (from KB or GL) of encounter, vertical footage of the encounter and, the name of the person making the report (along with a telephone number) should the BLM need to obtain additional information.

8. No location shall be constructed or moved, no well shall be plugged, and no drilling or workover equipment shall be removed from a well to be placed in a suspended status without prior approval of the BLM, Vernal Field Office. If operations are to be suspended for more than 30 days, prior approval of the BLM, Vernal Field Office shall be obtained and notification given before resumption of operations.

9. Chronologic drilling progress reports shall be filed directly with the BLM, Vernal Field Office on a weekly basis in sundry, letter format or e-mail to the Petroleum Engineers until the well is completed.

   Any change in the program shall be approved by the BLM, Vernal Field Office. "Sundry Notices and Reports on Wells" (Form BLM 3160-5) shall be filed for all changes of plans and other operations in accordance with 43 CFR 3162.3-2.

   Emergency approval may be obtained orally, but such approval does not waive the written report requirement. Any additional construction, reconstruction, or alterations of facilities, including roads, gathering lines, batteries, etc., which will result in the disturbance of new ground, shall require the filing of a suitable plan pursuant to Onshore Oil & Gas Order No. 1 of 43 CFR 3164.1 and prior approval by the BLM, Vernal Field Office.

   In accordance with 43 CFR 3162.4-3, this well shall be reported on the "Monthly Report of Operations" (Oil and Gas Operations Report ((OGOR)) starting with the month in which operations commence and continue each month until the well is physically plugged and abandoned. This report shall be filed in duplicate, directly with the Minerals Management Service, P.O. Box 17110, Denver, Colorado 80217-0110, or call 1-800-525-7922 (303) 231-3650 for reporting information.

10. Whether the well is completed as a dry hole or as a producer, "Well Completion and Recompletion Report and Log" (BLM Form 3160-4) shall be submitted not later than 30 days after completion of the well or after completion of operations being performed, in accordance with 43 CFR 3162.4-1. Two copies of all logs run, core descriptions, and all other surveys or data obtained and compiled during the drilling, workover, and/or completion operations, shall be filed on BLM Form 3160-4. Submit with the well completion report a geologic report including, at a minimum, formation tops, and a summary and conclusions. Also include deviation surveys, sample descriptions, strip logs, core data, drill stem test data, and results of production tests if performed. Samples (cuttings, fluid, and/or gas) shall be submitted only when requested by the BLM, Vernal Field Office.

    A cement bond log (CBL) will be run from the production casing shoe to the surface casing shoe and shall be utilized to determine the bond quality for the production casing. Submit a field copy of the CBL to this office.

Please submit an electronic copy of all other logs run on this well in LAS format to UT_VN_Welllogs@BLM.gov. This submission will supersede the requirement for submittal of paper logs to the BLM.

11. All off-lease storage, off-lease measurement, or commingling on-lease or off-lease shall have prior written approval from the BLM, Vernal Field Office.

    All measurement points shall be identified as point of sales or allocation for royalty determination prior to the installation of facilities.

12. Oil and gas meters shall be calibrated in place prior to any deliveries. The Field Office Petroleum Engineers will be provided with a date and time for the initial meter calibration and all future meter proving schedules. A copy of the meter calibration reports shall be submitted to the BLM, Vernal Field Office. All measurement facilities will conform to the API standards for liquid hydrocarbons and the AGA standards for natural gas measurement.

13. A schematic facilities diagram as required by Onshore Oil & Gas Order No. 3 shall be submitted to the BLM, Vernal Field Office within 30 days of installation or first production, whichever occurs first. All site security regulations as specified in Onshore Oil & Gas Order No. 3 shall be adhered to. All product lines entering and leaving hydrocarbon storage tanks will be effectively sealed in accordance with Onshore Oil & Gas Order No. 3.

14. This APD is approved subject to the requirement that, should the well be successfully completed for production, the BLM, Vernal Field office must be notified when it is placed in a producing status. Such notification will be by written communication and must be received in this office by not later than the fifth business day following the date on which the well is placed on production. The notification shall provide, as a minimum, the following informational items:

    a. Operator name, address, and telephone number.

    b. Well name and number.

    c. Well location (¼¼, Sec., Twn, Rng, and P.M.).

    d. Date well was placed in a producing status (date of first production for which royalty will be paid).

    e. The nature of the well's production, (i.e., crude oil, or crude oil and casing head gas, or natural gas and entrained liquid hydrocarbons).

    f. The Federal or Indian lease prefix and number on which the well is located; otherwise the non-Federal or non-Indian land category, i.e., State or private.

    g. Unit agreement and / or participating area name and number, if applicable.

    h. Communitization agreement number, if applicable.

15. Any venting or flaring of gas shall be done in accordance with Notice to Lessees (NTL) 4A and needs prior approval from Field Office Petroleum Engineers.

16. All undesirable events (fires, accidents, blowouts, spills, discharges) as specified in NTL 3A will be reported to the BLM, Vernal Field Office. Major events as defined in NTL3A, shall be reported verbally within 24 hours, followed by a written report within 15 days. "Other than Major Events" will be reported in writing within 15 days. "Minor Events" will be reported on the Monthly Report of Operations and Production

17. Pursuant to Onshore Oil & Gas Order No. 7, this is authorization for pit disposal of water produced from this well for a period of 90 days from the date of initial production. A permanent disposal method must be approved by this office and in operation prior to the end of this 90-day period. In order to meet this deadline, an application for the proposed permanent disposal method shall be submitted along with any necessary water analyses, as soon as possible, but no later than 45 days after the date of first production. Any method of disposal which has not been approved prior to the end of the authorized 90-day period will be considered as an Incident of Noncompliance and will be grounds for issuing a shut-in order until an acceptable manner for disposing of said water is provided and approved by this office.

18. Unless the plugging is to take place immediately upon receipt of oral approval, the Field Office Petroleum Engineers must be notified at least 24 hours in advance of the plugging of the well, in order that a representative may witness plugging operations. If a well is suspended or abandoned, all pits must be fenced immediately until they are backfilled. The "Subsequent Report of Abandonment" (Form BLM 3160-5) must be submitted within 30 days after the actual plugging of the well bore, showing location of plugs, amount of cement in each, and amount of casing left in hole, and the current status of the surface restoration.

FORM 3160-5
(September 2001)

UNITED STATES
DEPARTMENT OF THE INTERIOR
BUREAU OF LAND MANAGEMENT

FORM APPROVED
OMB No. 1004-0135
Expires January 31,2004

SUNDRY NOTICES AND REPORTS ON WELLS

Do not use this form for proposals to drill or to re-enter an abandoned well. Use Form 3160-3 (APD) for such proposals.

5. Lease Serial No.
USA UTU-74391

6. If Indian, Allottee or Tribe Name.

7. If Unit or CA/Agreement, Name and/or

1. Type of Well
☒ Oil Well ☐ Gas Well ☐ Other

8. Well Name and No.
FEDERAL 14-19-9-16

2. Name of Operator
NEWFIELD PRODUCTION COMPANY

9. API Well No.
4301333161

3a. Address Route 3 Box 3630
Myton, UT 84052

3b. Phone *(include are code)*
435.646.3721

10. Field and Pool, or Exploratory Area
MONUMENT BUTTE

4. Location of Well *(Footage, Sec., T., R., M., or Survey Description)*
452 FSL 2258 FWL

SESW Section 19 T9S R16E

11. County or Parish, State
DUCHESNE, UT

12. CHECK APPROPRIATE BOX(ES) TO INIDICATE NATURE OF NOTICE, OR OTHER DATA

TYPE OF SUBMISSION	TYPE OF ACTION			
☒ Notice of Intent	☐ Acidize	☐ Deepen	☐ Production(Start/Resume)	☐ Water Shut-Off
☐ Subsequent Report	☐ Alter Casing	☐ Fracture Treat	☐ Reclamation	☐ Well Integrity
☐ Final Abandonment	☐ Casing Repair	☐ New Construction	☐ Recomplete	☐ Other _____
	☐ Change Plans	☐ Plug & Abandon	☐ Temporarily Abandon	_____
	☐ Convert to	☐ Plug Back	☒ Water Disposal	_____

13. Describe Proposed or Completed Operation (clearly state all pertinent details, including estimated starting date of any proposed work and approximate duration thereof. If the proposal is to deepen directionally or recomplete horizontally, give subsurface locations and measured and true vertical depths of all pertinent markers and zones. Attach the Bond under which the work will be performed or provide the Bond No. on file with BLM/BIA. Required subsequent reports shall be filed within 30 days following completion of the involved operations. If the operation results in a multiple completion or recompletion in a new interval, a Form 3160-4 shall be filed once testing has been completed. Final Abandonment Notices shall be filed only after all requirements, including reclamation, have been completed, and the operator has determined that the site is ready for final inspection.)

Formation water is produced to a steel storage tank. If the production water meets quality guidelines, it is transported to the Ashley, Monument Butte, Jonah, and Beluga water injection facilities by company or contract trucks. Subsequently, the produced water is injected into approved Class II wells to enhance Newfield's secondary recovery project.

Water not meeting quality criteria, is disposed at Newfield's Pariette #4 disposal well (Sec. 7, T9S R19E) or at State of Utah approved surface disposal facilities.

Accepted by the
Utah Division of
Oil, Gas and Mining
FOR RECORD ONLY

I hereby certify that the foregoing is true and correct *(Printed/ Typed)*
Mandie Crozier

Title
Regulatory Specialist

Signature

Date
03/01/2007

Approved by

Title

Date

Conditions of approval, if any, are attached. Approval of this notice does not warrant or certify that the applicant holds legal or equitable title to those rights in the subject lease which would entitle the applicant to conduct operations thereon.

Office

Title 18 U.S.C. Section 1001 and Title 43 U.S.C. Section 1212, make it a crime for any person knowingly and willfully to make to any department or agency of the United States any false, fictitious and fraudulent statements or representations as to any matter within its jurisdiction.

(Instructions on reverse)

RECEIVED
MAR 02 2007
DIV. OF OIL, GAS & MINING

STATE OF UTAH
DEPARTMENT OF NATURAL RESOURCES
DIVISION OF OIL, GAS AND MINING

5. LEASE DESIGNATION AND SERIAL NUMBER: USA UTU-74391

SUNDRY NOTICES AND REPORTS ON WELLS

6. IF INDIAN, ALLOTTEE OR TRIBE NAME:

Do not use this form for proposals to drill new wells, significantly deepen existing wells below current bottom-hole depth, reenter plugged wells, or to drill horizontal laterals. Use APPLICATION FOR PERMIT TO DRILL form for such proposals.

7. UNIT or CA AGREEMENT NAME:

1. TYPE OF WELL: OIL WELL [x] GAS WELL [ ] OTHER

8. WELL NAME and NUMBER: FEDERAL 14-19-9-16

2. NAME OF OPERATOR: NEWFIELD PRODUCTION COMPANY

9. API NUMBER: 4301333161

3. ADDRESS OF OPERATOR: Route 3 Box 3630 CITY Myton STATE UT ZIP 84052 PHONE NUMBER 435.646.3721

10. FIELD AND POOL, OR WILDCAT: MONUMENT BUTTE

4. LOCATION OF WELL:

FOOTAGES AT SURFACE: 452 FSL 2258 FWL COUNTY: DUCHESNE

OTR/OTR. SECTION. TOWNSHIP. RANGE. MERIDIAN: SESW, 19, T9S, R16E STATE: UT

11. CHECK APPROPRIATE BOXES TO INDICATE NATURE OF NOTICE, REPORT, OR OTHER DATA

TYPE OF SUBMISSION	TYPE OF ACTION		
[ ] NOTICE OF INTENT (Submit in Duplicate)	[ ] ACIDIZE	[ ] DEEPEN	[ ] REPERFORATE CURRENT FORMATION
Approximate date work will	[ ] ALTER CASING	[ ] FRACTURE TREAT	[ ] SIDETRACK TO REPAIR WELL
	[ ] CASING REPAIR	[ ] NEW CONSTRUCTION	[ ] TEMPORARITLY ABANDON
	[ ] CHANGE TO PREVIOUS PLANS	[ ] OPERATOR CHANGE	[ ] TUBING REPAIR
	[ ] CHANGE TUBING	[ ] PLUG AND ABANDON	[ ] VENT OR FLAIR
[x] SUBSEOUENT REPORT (Submit Original Form Only)	[ ] CHANGE WELL NAME	[ ] PLUG BACK	[ ] WATER DISPOSAL
Date of Work Completion:	[ ] CHANGE WELL STATUS	[ ] PRODUCTION (START/STOP)	[ ] WATER SHUT-OFF
	[ ] COMMINGLE PRODUCING FORMATIONS	[ ] RECLAMATION OF WELL SITE	[x] OTHER: - Weekly Status Report
03/19/2007	[ ] CONVERT WELL TYPE	[ ] RECOMPLETE - DIFFERENT FORMATION	

12. DESCRIBE PROPOSED OR COMPLETED OPERATIONS. Clearly show all pertinent details including dates, depths, volumes, etc.

The above subject well was completed on 02/27/07, attached is a daily completion status report.

NAME (PLEASE PRINT) Jentri Park TITLE Production Clerk

SIGNATURE DATE 03/19/2007

(This space for State use only)

RECEIVED

MAR 2 2 2007

DIV. OF OIL, GAS & MINING

Daily Activity Report

Format For Sundry

FEDERAL 14-19-9-16

11/1/2006 To 5/28/2007

2/17/2007 Day: 1 **Completion**

Rigless on 2/20/2007 - Install 5M frac head. NU Cameron BOP. RU H/O truck & pressure test casing, frac head, blind rams & casing valves to 4500 psi. RU Perforators LLC WLT w/ mast & run CBL under pressure. WLTD @ 5927' & cement top @ 136'. Perforate stage #1 W/ 4" ported gun as follows: CP1 sds @ 5452-5460' W/ 4 JSPF for total of 32 shots. RD WLT. SIFN W/ est 142 BWTR.

2/22/2007 Day: 2 **Completion**

Rigless on 2/21/2007 - RU BJ Services. 10 psi on well. Frac CP1 sds w/ 34,903#'s of 20/40 sand in 471 bbls of Lightning 17 fluid. Broke @ 2483 psi. Treated w/ ave pressure of 2080 psi @ ave rate of 24.8 BPM. Pumped 504 gals of 15% HCL in flush for Stage #2. ISIP 1839 psi. Leave pressure on well. 613 BWTR. RU Lone Wolf WLT, crane & lubricator. RIH w/ 5-1/2" Weatherford composite flow through plug & 13' perf gun. Set plug @ 5100'. Perforate A1 sds @ 4976- 89' w/ 3-1/8" Slick Guns (23 gram, .43"HE, 90°) w/ 4 SPF for total of 52 shots. RU BJ Services. 1607 psi on well. Pressured up to 4200 psi, Would not breakdown. RU Lone Wolf WL & dump bail acid. RU BJ Services. 1515 psi on well. Frac A1 sds w/ 80,502#'s of 20/40 sand in 597 bbls of Lightning 17 fluid. Broke @ 3677 psi. Treated w/ ave pressure of 2245 psi @ ave rate of 24.6 BPM. Pumped 504 gals of 15% HCL in flush for Stage #3. ISIP 2369 psi. Leave pressure on well. RU Lone Wolf WLT, crane & lubricator. RIH w/ 5-1/2" Weatherford composite flow through plug, 9' & 12' perf gun. Set plug @ 4930'. Perforate B2 sds @ 4843- 52', B1 sds @ 4780- 92' w/ 3-1/8" Slick Guns (23 gram, .43"HE, 90°) w/ 4 SPF for total of 84 shots (2 runs). SIWFN w/ 1210 BWTR.

2/23/2007 Day: 3 **Completion**

Rigless on 2/22/2007 - RU BJ Services. 460 psi on well. Frac B1 & B2 sds w/ 159,255#'s of 20/40 sand in 1026 bbls of Lightning 17 fluid. Broke @ 3675 psi. Treated w/ ave pressure of 1675 psi @ ave rate of 24.8 BPM. ISIP 1790 psi. Begin immediate flowback on 12/64 choke @ 1 BPM. Flowed for 4 hrs & died. Rec. 235 BTF. SIWFN w/ 2001 BWTR.

2/26/2007 Day: 4 **Completion**

Rigless on 2/23/2007 - 6:30AM MIRUSU, OWU, N/D 10,000 BOP & Frac Flnge, N/U 3, 000 Flnge & 5,000 BOP, P/U & RIH W/-4 3/4 Bit, Bit Sub, 158 Jts Tbg To Fill @ 4898', R/U Nabors Pwr Swvl, R/U R/pmp, C/Out To Plg @ 4930', Drill Up Plg, Swvl I/Hle To Plg @ 5100', Drill Up Plg, Swvl I/Hle To Fill @ 5827', C/Out To 5971', Curc Well Clean, POOH W/-2 Jts Tbg EOB @ 5907', SWI, 6:00PM C/SDFN. Gained 43 Bbls Wtr Thru Day.

2/27/2007 Day: 5 **Completion**

NC #1 on 2/26/2007 - 6:30AM OWU, RIH W/-Tbg To Fill @ 5971', R/U Nabors Pwr Swvl, Drill & C/Out To PBTD @ 5990', Curc Well Clean 1 Hr, R/D Pwr Swvl, POOH W/-5 Jts Tbg, EOB @ 5856', R/U Swab, RIH IFL @ Surf, Made 13 Swab Runs, Recvred 152 Bbls Wtr, Lite Trce Sand, Lite Trce Oil, FFL @ 1700', RIH W/-Tbg To PBTD @ 5990', No Fill, R/U R/pmp, Curc Well Clean, POOH W/-193 Jts Tbg, Bit Sub & Bit.

P/U & RIH W/-N/C, 2 Jts Tbg, S/N, 2 Jts Tbg, 5 1/2 T/A, 174 Jts Tbg, EOT @ 5545' , SWI, 6:30PM C/SDFN, Lost 34 Bbls Wtr On Drill Out To PBTD, Recvred 152 Bbls Wtr Swabbing, Lost 107 Bbls Wtr On Curc Out @ PBTD, Total Wtr Recovery For Day = 11 Bbls.

2/28/2007 Day: 6 **Completion**

NC #1 on 2/27/2007 - 6:30AM OWU, N/D BOP, Set 5 1/2 T/A In 15,000 Tension, N/U W/-HD, P/U Stroke & RIH W/- CDI-2 1/2x 1 1/2x12x16' RHAC, 6-1 1/2x25' Wt Bars, 10-3/4x25' Scrapered Rods, 103-3/4x25' Slick Rods, 100-3/4x25' Scrapered Rods, 1-3/4x8'-1-3/4x6'-2-3/4x4' Ponys, 1 1/2x22' Polish Rod, R/U Unit, R/U R/pmp, Fill Tbg W/-1 Bbl Wtr, Stroke Unit & Tbg To 800 Psi, Good Test. R/D Rig. POP @ 12:00PM, 86" SL, 5 SPM, 1Bbl Wtr Loss For Day, (Final Report).

Pertinent Files: Go to File List

FORM 3160-4
(July 1992)

SUBMIT IN DUPLICATE* (See other instructions on reverse side)

FORM APPROVED
OMB NO. 1004-0137
Expires: February 28, 1995

UNITED STATES
DEPARTMENT OF THE INTERIOR
BUREAU OF LAND MANAGEMENT

WELL COMPLETION OR RECOMPLETION REPORT AND LOG*

5. LEASE DESIGNATION AND SERIAL NO.: UTU-74391

6. IF INDIAN, ALLOTTEE OR TRIBE NAME: NA

7. UNIT AGREEMENT NAME: Federal

8. FARM OR LEASE NAME, WELL NO.: Federal 14-19-9-16

9. WELL NO.: 43-013-33161

10. FIELD AND POOL OR WILDCAT: Monument Butte

11. SEC., T., R., M., OR BLOCK AND SURVEY OR AREA: Sec. 27, T9S, R15E

1a. TYPE OF WORK: OIL WELL [X] GAS WELL [ ] DRY [ ] Other

1b. TYPE OF WELL: NEW WELL [X] WORK OVER [ ] DEEPEN [ ] PLUG BACK [ ] DIFF RESVR. [ ] Other

2. NAME OF OPERATOR: Newfield Exploration Company

3. ADDRESS AND TELEPHONE NO.: 1401 17th St. Suite 1000 Denver, CO 80202

4. LOCATION OF WELL (Report locations clearly and in accordance with any State requirements.*)
At Surface: 452' FSL & 2258' FWL (SE/SW) Sec. 19, T9S, R16E
At top prod. Interval reported below
At total depth

14. API NO.	DATE ISSUED	12. COUNTY OR PARISH	13. STATE
43-013-33161	06/08/06	Duchesne	UT

15. DATE SPUDDED	16. DATE T.D. REACHED	17. DATE COMPL. (Ready to prod.)	18. ELEVATIONS (DF, RKB, RT, GR, ETC.)*		19. ELEV. CASINGHEAD
1/23/07	02/01/07	02/27/07	6245' GL	6257' KB	

20. TOTAL DEPTH, MD & TVD	21. PLUG BACK T.D., MD & TVD	22. IF MULTIPLE COMPL., HOW MANY*	23. INTERVALS DRILLED BY	ROTARY TOOLS	CABLE TOOLS
6000'	5990'		------>	X	

24. PRODUCING INTERVAL(S), OF THIS COMPLETION--TOP, BOTTOM, NAME (MD AND TVD)*: Green River 4780'-5460'

25. WAS DIRECTIONAL SURVEY MADE: No

26. TYPE ELECTRIC AND OTHER LOGS RUN: Dual Induction Guard, SP, Compensated Density, Compensated Neutron, GR, Caliper, Cement Bond Log

27. WAS WELL CORED: No

23. CASING RECORD (Report all strings set in well)

CASING SIZE/GRADE	WEIGHT, LB./FT.	DEPTH SET (MD)	HOLE SIZE	TOP OF CEMENT, CEMENTING RECORD	AMOUNT PULLED
8-5/8" - J-55	24#	322'	12-1/4"	To surface with 160 sx Class "G" cmt	
5-1/2" - J-55	15.5#	5993'	7-7/8"	300 sx Premlite II and 450 sx 50/50 Poz	

29. LINER RECORD

SIZE	TOP (MD)	BOTTOM (MD)	SACKS CEMENT*	SCREEN (MD)

30. TUBING RECORD

SIZE	DEPTH SET (MD)	PACKER SET (MD)
2-7/8"	EOT @ 5552'	TA @ 5427'

31. PERFORATION RECORD (Interval, size and number)

INTERVAL	SIZE	SPF/NUMBER
(CP1) 5452'-5460'	.46"	4/32
(A1) 4976'-4989'	.43"	4/52
(B2 & 1) 4843'-4852', 4780'-4792'	.43"	4/84

32. ACID, SHOT, FRACTURE, CEMENT SQUEEZE, ETC.

DEPTH INTERVAL (MD)	AMOUNT AND KIND OF MATERIAL USED
5452'-5460'	Frac w/ 34,903# 20/40 sand in 471 bbls fluid
4976'-4989'	Frac w/ 80,502# 20/40 sand in 597 bbls fluid
4780'-4852'	Frac w/ 159,255# 20/40 sand in 1026 bbls fluid

33.* PRODUCTION

DATE FIRST PRODUCTION	PRODUCTION METHOD (Flowing, gas lift, pumping--size and type of pump)	WELL STATUS (Producing or shut-in)
02/27/07	2-1/2" x 1-1/2" x 12' x 16'RHAC SM Plunger Pump	PRODUCING

DATE OF TEST	HOURS TESTED	CHOKE SIZE	PROD'N. FOR TEST PERIOD	OIL--BBLS.	GAS--MCF.	WATER--BBL.	GAS-OIL RATIO
10 day ave			----->	87	95	29	1092

FLOW. TUBING PRESS.	CASING PRESSURE	CALCULATED 24-HOUR RATE	OIL-BBL.	GAS--MCF.	WATER--BBL.	OIL GRAVITY-API (CORR.)
		----->				

34. DISPOSITION OF GAS (Sold, used for fuel, vented, etc.): Sold & Used for Fuel

TEST WITNESSED BY

RECEIVED
MAR 28 2007
DIV. OF OIL, GAS & MINING

35. LIST OF ATTACHMENTS

36. I hereby certify that the foregoing and attached information is complete and correct as determined from all available records

SIGNED: Jentri Park TITLE: Production Clerk DATE: 3/27/2007

JP

*(See Instructions and Spaces for Additional Data on Reverse Side)

Title 18 U.S.C. Section 1001, makes it a crime for any person knowingly and willfully to make to any department or agency of the United States any false, fictitious or fraudulent statements or representations as to any matter within its jurisdiction.

37. SUMMARY OF POROUS ZONES: (Show all important zones of porosity and contents thereof; cored intervals, and all drill-stem, tests, including depth interval tested, cushion used, time tool open, flowing and shut-in pressures, and recoveries);

FORMATION	TOP	BOTTOM	DESCRIPTION, CONTENTS, ETC.
			Well Name **Federal 14-19-9-16**

38. GEOLOGIC MARKERS

NAME	TOP MEAS. DEPTH	TOP TRUE VERT. DEPTH
Garden Gulch Mkr	3542'	
Garden Gulch 1	3762'	
Garden Gulch 2	3874'	
Point 3 Mkr	4120'	
X Mkr	4384'	
Y-Mkr	4416'	
Douglas Creek Mkr	4526'	
BiCarbonate Mkr		
B Limestone Mkr	4852'	
Castle Peak	5417'	
Basal Carbonate	5865'	
Total Depth (LOGGERS	5996'	

STATE OF UTAH
DEPARTMENT OF NATURAL RESOURCES
DIVISION OF OIL, GAS, AND MINING

FORM 9

5.LEASE DESIGNATION AND SERIAL NUMBER: UTU-74391

SUNDRY NOTICES AND REPORTS ON WELLS

Do not use this form for proposals to drill new wells, significantly deepen existing wells below current bottom-hole depth, reenter plugged wells, or to drill horizontal laterals. Use APPLICATION FOR PERMIT TO DRILL form for such proposals.

6. IF INDIAN, ALLOTTEE OR TRIBE NAME:

7.UNIT or CA AGREEMENT NAME: GMBU (GRRV)

1. TYPE OF WELL Water Injection Well

8. WELL NAME and NUMBER: FEDERAL 14-19-9-16

2. NAME OF OPERATOR: NEWFIELD PRODUCTION COMPANY

9. API NUMBER: 43013331610000

3. ADDRESS OF OPERATOR: Rt 3 Box 3630 , Myton, UT, 84052

PHONE NUMBER: 435 646-4825 Ext

9. FIELD and POOL or WILDCAT: MONUMENT BUTTE

4. LOCATION OF WELL
FOOTAGES AT SURFACE: 0452 FSL 2258 FWL
QTR/QTR, SECTION, TOWNSHIP, RANGE, MERIDIAN: Qtr/Qtr: SESW Section: 19 Township: 09.0S Range: 16.0E Meridian: S

COUNTY: DUCHESNE

STATE: UTAH

11. CHECK APPROPRIATE BOXES TO INDICATE NATURE OF NOTICE, REPORT, OR OTHER DATA

TYPE OF SUBMISSION

- ☐ NOTICE OF INTENT — Approximate date work will start:
- ✓ SUBSEQUENT REPORT — Date of Work Completion: 4/18/2014
- ☐ SPUD REPORT — Date of Spud:
- ☐ DRILLING REPORT — Report Date:

TYPE OF ACTION

☐ ACIDIZE	☐ ALTER CASING	☐ CASING REPAIR
☐ CHANGE TO PREVIOUS PLANS	☐ CHANGE TUBING	☐ CHANGE WELL NAME
✓ CHANGE WELL STATUS	☐ COMMINGLE PRODUCING FORMATIONS	✓ CONVERT WELL TYPE
☐ DEEPEN	☐ FRACTURE TREAT	☐ NEW CONSTRUCTION
☐ OPERATOR CHANGE	☐ PLUG AND ABANDON	☐ PLUG BACK
☐ PRODUCTION START OR RESUME	☐ RECLAMATION OF WELL SITE	☐ RECOMPLETE DIFFERENT FORMATION
☐ REPERFORATE CURRENT FORMATION	☐ SIDETRACK TO REPAIR WELL	☐ TEMPORARY ABANDON
☐ TUBING REPAIR	☐ VENT OR FLARE	☐ WATER DISPOSAL
☐ WATER SHUTOFF	☐ SI TA STATUS EXTENSION	☐ APD EXTENSION
☐ WILDCAT WELL DETERMINATION	☐ OTHER	OTHER:

12. DESCRIBE PROPOSED OR COMPLETED OPERATIONS. Clearly show all pertinent details including dates, depths, volumes, etc.

The above reference well was put on injection at 3:30 PM on 04/18/2014.

Accepted by the Utah Division of Oil, Gas and Mining
FOR RECORD ONLY
December 22, 2014

NAME (PLEASE PRINT) Lucy Chavez-Naupoto

PHONE NUMBER 435 646-4874

TITLE Water Services Technician

SIGNATURE N/A

DATE 12/18/2014

RECEIVED: Dec. 18, 2014

GARY R. HERBERT
Governor

SPENCER J. COX
Lieutenant Governor

State of Utah

DEPARTMENT OF NATURAL RESOURCES

MICHAEL R. STYLER
Executive Director

Division of Oil, Gas and Mining

JOHN R. BAZA
Division Director

UNDERGROUND INJECTION CONTROL PERMIT

Cause No. UIC-415.10

Operator: Newfield Production Company

Well: Federal 14-19-9-16

Location: Section 19, Township 9 South, Range 16 East

County: Duchesne

API No.: 43-013-33161

Well Type: Enhanced Recovery (waterflood)

Stipulations of Permit Approval

1. Approval for conversion to Injection Well issued on February 6, 2014.
2. Maximum Allowable Injection Pressure: 1,759 psig
3. Maximum Allowable Injection Rate: (restricted by pressure limitation)
4. Injection Interval: Green River Formation (3,875' – 5,990')
5. Any subsequent wells drilled within a ½ mile radius of this well shall have production casing cement brought up to or above the top of the unitized interval for the Greater Monument Butte Unit.

Approved by: _____ Date 4/15/2014
John Rogers
Associate Director

JR/MLR/js
cc: Bruce Suchomel, Environmental Protection Agency
Bureau of Land Management, Vernal
Jill Loyle, Newfield Production Company, Denver
Newfield Production Company, Myton
Duchesne County
Well File
N:\O&G Reviewed Docs\ChronFile\UIC

STATE OF UTAH
DEPARTMENT OF NATURAL RESOURCES
DIVISION OF OIL, GAS, AND MINING

FORM 9

5.LEASE DESIGNATION AND SERIAL NUMBER: UTU-74391

SUNDRY NOTICES AND REPORTS ON WELLS

Do not use this form for proposals to drill new wells, significantly deepen existing wells below current bottom-hole depth, reenter plugged wells, or to drill horizontal laterals. Use APPLICATION FOR PERMIT TO DRILL form for such proposals.

6. IF INDIAN, ALLOTTEE OR TRIBE NAME:

7.UNIT or CA AGREEMENT NAME: GMBU (GRRV)

1. TYPE OF WELL: Oil Well

8. WELL NAME and NUMBER: FEDERAL 14-19-9-16

2. NAME OF OPERATOR: NEWFIELD PRODUCTION COMPANY

9. API NUMBER: 43013331610000

3. ADDRESS OF OPERATOR: Rt 3 Box 3630 , Myton, UT, 84052
PHONE NUMBER: 435 646-4825 Ext

9. FIELD and POOL or WILDCAT: MONUMENT BUTTE

4. LOCATION OF WELL
FOOTAGES AT SURFACE: 0452 FSL 2258 FWL
QTR/QTR, SECTION, TOWNSHIP, RANGE, MERIDIAN: Qtr/Qtr: SESW Section: 19 Township: 09.0S Range: 16.0E Meridian: S

COUNTY: DUCHESNE

STATE: UTAH

11. CHECK APPROPRIATE BOXES TO INDICATE NATURE OF NOTICE, REPORT, OR OTHER DATA

TYPE OF SUBMISSION	TYPE OF ACTION		
☐ NOTICE OF INTENT Approximate date work will start:	☐ ACIDIZE	☐ ALTER CASING	☐ CASING REPAIR
	☐ CHANGE TO PREVIOUS PLANS	☐ CHANGE TUBING	☐ CHANGE WELL NAME
✓ SUBSEQUENT REPORT Date of Work Completion: 4/1/2014	✓ CHANGE WELL STATUS	☐ COMMINGLE PRODUCING FORMATIONS	✓ CONVERT WELL TYPE
	☐ DEEPEN	☐ FRACTURE TREAT	☐ NEW CONSTRUCTION
	☐ OPERATOR CHANGE	☐ PLUG AND ABANDON	☐ PLUG BACK
☐ SPUD REPORT Date of Spud:	☐ PRODUCTION START OR RESUME	☐ RECLAMATION OF WELL SITE	☐ RECOMPLETE DIFFERENT FORMATION
	☐ REPERFORATE CURRENT FORMATION	☐ SIDETRACK TO REPAIR WELL	☐ TEMPORARY ABANDON
	☐ TUBING REPAIR	☐ VENT OR FLARE	☐ WATER DISPOSAL
☐ DRILLING REPORT Report Date:	☐ WATER SHUTOFF	☐ SI TA STATUS EXTENSION	☐ APD EXTENSION
	☐ WILDCAT WELL DETERMINATION	☐ OTHER	OTHER:

12. DESCRIBE PROPOSED OR COMPLETED OPERATIONS. Clearly show all pertinent details including dates, depths, volumes, etc.

The subject well has been converted from a producing oil well to an injection well on 03/21/2014. On 03/31/2014 Chris Jensen with the State of Utah DOGM was contacted concerning the initial MIT on the above listed well. On 04/01/2014 the casing was pressured up to 1126 psig and charted for 30 minutes with no pressure loss. The well was not injecting during the test. The tubing pressure was 560 psig during the test. There was a State representative available to witness the test - Chris Jensen.

Accepted by the Utah Division of Oil, Gas and Mining
FOR RECORD ONLY
April 02, 2014

NAME (PLEASE PRINT)	PHONE NUMBER	TITLE
Lucy Chavez-Naupoto	435 646-4874	Water Services Technician
SIGNATURE: N/A		DATE: 4/2/2014

RECEIVED: Apr. 02, 2014

Sundry Number: 49532 API Well Number: 43013331610000

Mechanical Integrity Test
Casing or Annulus Pressure Test

Newfield Production Company
Rt. 3 Box 3630
Myton, UT 84052
435-646-3721

Witness: Chris Jensen **Date** 4 / 1 / 14 **Time** 9:10 am pm
Test Conducted by: Troy Lazenby
Others Present: Chris Jensen

Well: Federal 14-19-9-16	**Field:** MBFF
Well Location: SE/SW Sec. 19, T9S, R16E Duchesne CO. UT.	**API No:** 43-013-33161 UTU87538X

Time	Casing Pressure	
0 min	1126	psig
5	1126	psig
10	1126	psig
15	1126	psig
20	1126	psig
25	1126	psig
30 min	1126	psig
35		psig
40		psig
45		psig
50		psig
55		psig
60 min		psig

Tubing pressure: 560 psig

Result: Pass Fail

Signature of Witness: Chris Jensen

Signature of Person Conducting Test:

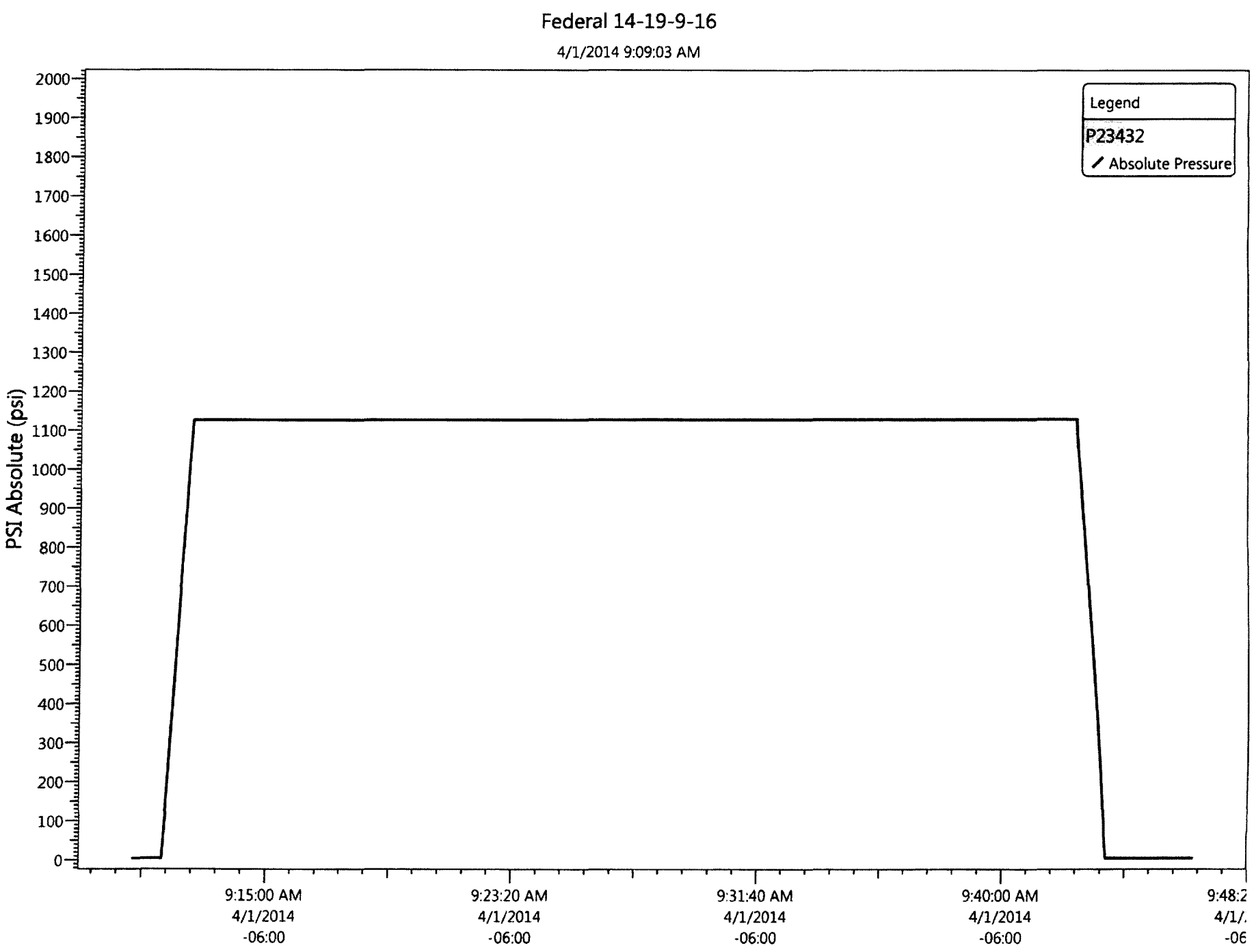

Sundry Number: 49532 API Well Number: 4301333161000

NEWFIELD

Job Detail Summary Report

Well Name: Federal 14-19-9-16

Jobs

Primary Job Type	Job Start Date	Job End Date
Conversion	3/19/2014	

Daily Operations

Report Start Date	Report End Date	24hr Activity Summary
3/19/2014	3/19/2014	MIRU

Start Time	End Time	Comment
05:30	18:30	Moved From 6-19-9-16: MIRUSU, RDPU, Waited on Tk & Wtr, BMW H/O Pmped 60BW d/Csg, LD & Stripped Polished Rod, US Rod Pmp, Flushed w/ 40BW, Soft Seat & Test, 18BW to Fill, Tbg Failed @ 3200psi, LD Rod String On Trl, LD & Inspect Rod Pmp (Lite Scale on Bore), RU & RIH w/ SL, Tagged Fill @5990' (3' of Fill on PB), XO For Tbg, SW
18:30	19:00	CREW TRAVEL

Report Start Date	Report End Date	24hr Activity Summary
3/20/2014	3/20/2014	ND BOP POOH TBG PU & RIH W/ INJ STRING

Start Time	End Time	Comment
05:30	06:00	CREW TRAVEL
06:00	18:30	OWU, ND B1 Adaptor WH, Release TAC, NU Weatherford BOP, RU Workfloor, POOH w/ 151- Jts (4714') Breaking Collars & Applying Liquid O-Ring to Pins, BMW H/O Flushed 30BW d/Tbg, LD Remaining (())- Jts on Trl, Located Failure in Jt# (()) (Rod Wear), PU & RIH w/ Weatherford AS-1X Injection PKR & 151- Jts, RU & RIH w/ SL to Seat Stnd Valv, (30)BW to Fill, PT Tbg to 3000psi, Observ Press, Good Test, R/U S/Line, RIH To Fish S/Valv, POOH W/ S/Line R/D S/Line, SWIFN
18:30	19:00	CREW TRAVEL

Report Start Date	Report End Date	24hr Activity Summary
3/21/2014	3/21/2014	RD TONGS RD FLOOR NU WH NU INJ TREE

Start Time	End Time	Comment
05:30	06:00	CREW TRAVEL
06:00	14:00	OWU, R/D Tongs, R/D Rig Floor, N/D Bop, N/U Well Head, R/U BMW Hot Oiler To Csg Pump 60 BW D/Cgs Pkr Fuild, N/D B1, N/U Injection Tree # 142651 Set Pkr CE @ 4720.66 W/ 15000# Tension, N/U Injection Tree, 42 BW, To Fill Annulus, Psi Tst To 1500 Psi, Observ Psi, No Psi Loss In 30 Min, NewField Rep Performed MIT, GOOD TEST. RDMOSU..... FINAL RIG REPORT...

Report Start Date	Report End Date	24hr Activity Summary
4/1/2014	4/1/2014	CONDUCT INITIAL MIT

Start Time	End Time	Comment
09:10	11:40	On 03/31/2014 Chris Jensen with the State of Utah DOGM was contacted concerning the initial MIT on the above listed well. On 04/01/2014 the casing was pressured up to 1126 psig and charted for 30 minutes with no pressure loss. The well was not injecting during the test. The tubing pressure was 560 psig during the test. There was a State representative available to witness the test - Chris Jensen.

Sundry Number: 49532 API Well Number: 43013331610000

NEWFIELD

Schematic

Well Name: Federal 14-19-9-16

Surface Legal Location	API/UWI	Well RC	Lease	State/Province	Field Name	County
19-9S-16E	43013331610000	500159193		Utah	GMBU CTB3	DUCHESNE

Spud Date	Rig Release Date	On Production Date	Original KB Elevation (ft)	Ground Elevation (ft)	Total Depth All (TVD) (ftKB)	PBTD (All) (ftKB)
1/23/2007	2/2/2007	2/27/2007	6,257	6,245		Original Hole - 5,955.5

Most Recent Job

Job Category	Primary Job Type	Secondary Job Type	Job Start Date	Job End Date
Production / Workover	Conversion	Basic	3/19/2014	

TD: 6,000.0 Vertical - Original Hole, 4/2/2014 8:33:03 AM

MD (ftKB)	TVD (ftKB)	Incl (°)	DLS DLS (°...
0.0			
12.1			
136.2			
319.2			
319.9			
4,714.6			
4,715.6			
4,717.2			
4,717.5			
4,724.4			
4,724.7			
4,729.0			
4,730.0			
4,730.6			
4,779.9			
4,792.0			
4,842.8			
4,852.0			
4,976.0			
4,988.8			
5,452.1			
5,460.0			
5,955.4			
5,956.0			
5,990.2			
5,991.5			
5,992.1			
6,000.0			

Vertical schematic (actual)

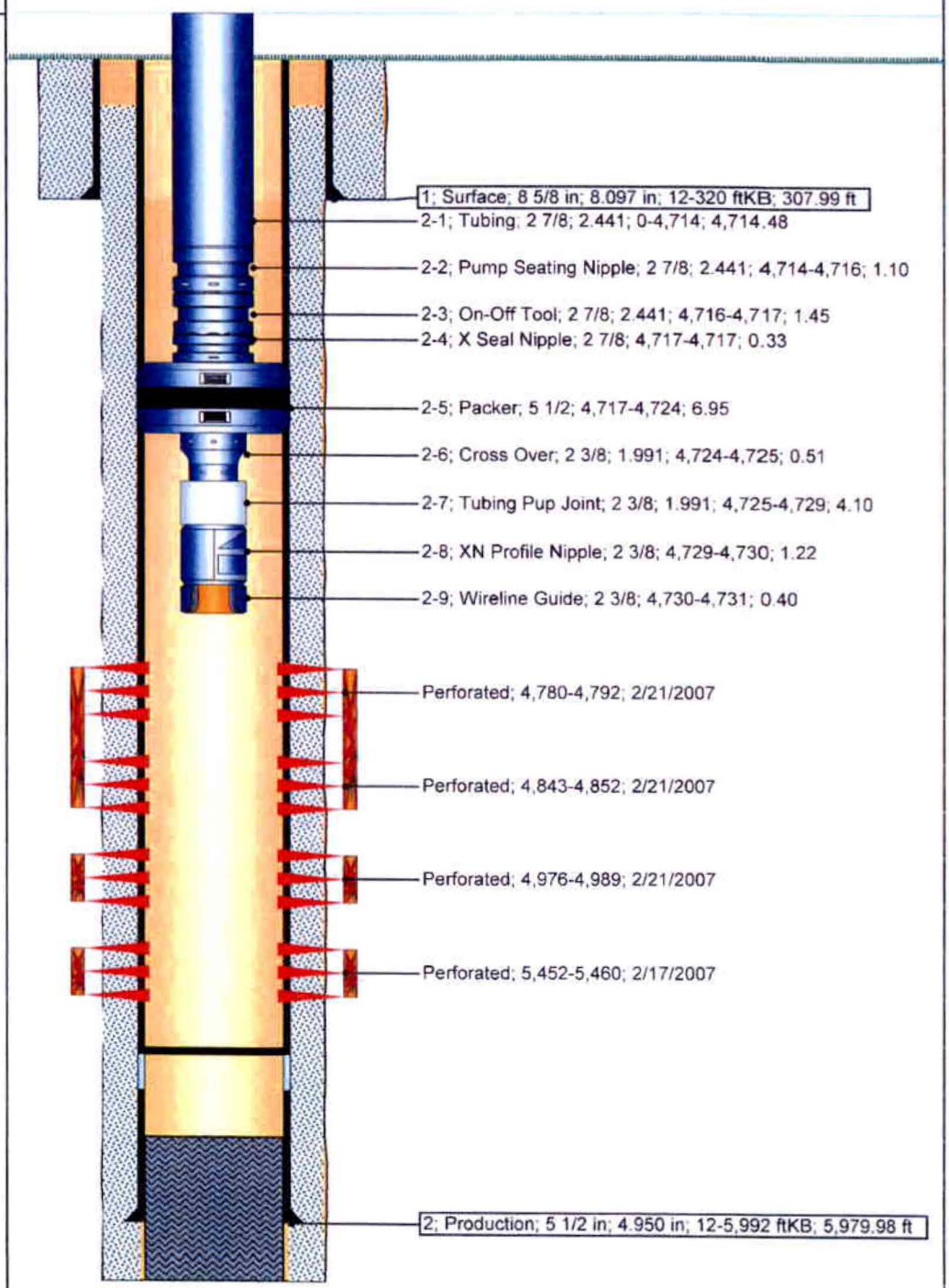

NEWFIELD

Newfield Wellbore Diagram Data
Federal 14-19-9-16

Surface Legal Location	API/UWI	Lease
19-9S-16E	43013331610000	

County	State/Province	Basin	Field Name
DUCHESNE	Utah	Uintah Basin	GMBU CTB3

Well Start Date	Spud Date	Final Rig Release Date	On Production Date
1/23/2007	1/23/2007	2/2/2007	2/27/2007

Original KB Elevation (ft)	Ground Elevation (ft)	Total Depth (ftKB)	Total Depth All (TVD) (ftKB)	PBTD (All) (ftKB)
6,257	6,245	6,000.0		Original Hole - 5,955.5

Casing Strings

Csg Des	Run Date	OD (in)	ID (in)	Wt/Len (lb/ft)	Grade	Set Depth (ftKB)
Surface	1/23/2007	8 5/8	8.097	24.00	J-55	320
Production	2/1/2007	5 1/2	4.950	15.50	J-55	5,992

Cement

String: Surface, 320ftKB 1/23/2007

Cementing Company	Top Depth (ftKB)	Bottom Depth (ftKB)	Full Return?	Vol Cement Ret (bbl)
	12.0	320.0		

Fluid Description	Fluid Type	Amount (sacks)	Class	Estimated Top (ftKB)
2% CaCL2 + 1/4#/sk Cello-Flake	Lead	160	G	

String: Production, 5,992ftKB 2/2/2007

Cementing Company	Top Depth (ftKB)	Bottom Depth (ftKB)	Full Return?	Vol Cement Ret (bbl)
	136.0	6,000.0		

Fluid Description	Fluid Type	Amount (sacks)	Class	Estimated Top (ftKB)
10%gel. 3%KCL, 1/2#sk Cello flake,.3#/sk CSE. 2#/sk Kolseal. .5% SM	Lead	300	Premium Lite II	
2% gel. 3%KCL. .5%EC-1 1/4#/sk Cello-flake .3%SM	Tail	450	50:50 POZ	

Tubing Strings

Tubing Description	Run Date	Set Depth (ftKB)
Tubing	3/20/2014	4,730.5

Item Des	Jts	OD (in)	ID (in)	Wt (lb/ft)	Grade	Len (ft)	Top (ftKB)	Btm (ftKB)
Tubing	151	2 7/8	2.441	6.50	J-55	4,714.48	0.0	4,714.5
Pump Seating Nipple		2 7/8	2.441			1.10	4,714.5	4,715.6
On-Off Tool		2 7/8	2.441			1.45	4,715.6	4,717.0
X Seal Nipple		2 7/8				0.33	4,717.0	4,717.4
Packer		5 1/2				6.95	4,717.4	4,724.3
Cross Over		2 3/8	1.991			0.51	4,724.3	4,724.8
Tubing Pup Joint		2 3/8	1.991			4.10	4,724.8	4,728.9
XN Profile Nipple		2 3/8				1.22	4,728.9	4,730.1
Wireline Guide		2 3/8				0.40	4,730.1	4,730.5

Rod Strings

Rod Description	Run Date	Set Depth (ftKB)

Item Des	Jts	OD (in)	Wt (lb/ft)	Grade	Len (ft)	Top (ftKB)	Btm (ftKB)

Perforation Intervals

Stage#	Zone	Top (ftKB)	Btm (ftKB)	Shot Dens (shots/ft)	Phasing (°)	Nom Hole Dia (in)	Date
3	B1 SDS, Original Hole	4,780	4,792	4			2/21/2007
3	B2 SDS, Original Hole	4,843	4,852	4			2/21/2007
2	A1 SDS, Original Hole	4,976	4,989	4			2/21/2007
1	CP1 SDS, Original Hole	5,452	5,460	4			2/17/2007

Stimulations & Treatments

Stage#	ISIP (psi)	Frac Gradient (psi/ft)	Max Rate (bbl/min)	Max PSI (psi)	Total Clean Vol (bbl)	Total Slurry Vol (bbl)	Vol Recov (bbl)
1	1,839	0.77	25.2	2,610			
2	2,369	0.91	25.2	2,420			
3	1,790	0.81	25.2	1,900			

Proppant

Stage#	Total Prop Vol Pumped (lb)	Total Add Amount
1		Proppant SAND 34903 LB
2		Proppant SAND 80502 LB
3		Proppant SAND 159255 LB

GARY R. HERBERT
Governor

GREGORY S. BELL
Lieutenant Governor

State of Utah

DEPARTMENT OF NATURAL RESOURCES

MICHAEL R. STYLER
Executive Director

Division of Oil, Gas and Mining

JOHN R. BAZA
Division Director

February 6, 2014

Newfield Production Company
1001 Seventeenth Street, Suite 2000
Denver, CO 80202

Subject: Greater Monument Butte Unit Well: Federal 14-19-9-16, Section 19, Township 9 South, Range 16 East, SLBM, Duchesne County, Utah, API Well # 43-013-33161

Ladies and Gentlemen:

Pursuant to Utah Admin. Code R649-5-3-3, the Division of Oil, Gas and Mining (the "Division") issues its administrative approval for conversion of the referenced well to a Class II injection well. Accordingly, the following stipulations shall apply for full compliance with this approval:

1. Compliance with all applicable requirements for the operation, maintenance and reporting for Underground Injection Control ("UIC") Class II injection wells pursuant to Utah Admin. Code R649-1 et seq.

2. Conformance with all conditions and requirements of the complete application submitted by Newfield Production Company.

3. A casing\tubing pressure test shall be conducted prior to commencing injection.

4. Pressure shall be monitored between the surface casing and the production casing on a regular basis. Any pressure changes observed shall be reported to the Division immediately.

5. The top of the injection interval shall be limited to a depth no higher than 3,875 feet in the Federal 14-19-9-16 well.

A final approval to commence injection will be issued upon satisfactory completion of the listed stipulations. If you have any questions regarding this approval or the necessary requirements, please contact Mark Reinbold at 801-538-5333 or Brad Hill at 801-538-5315.

Sincerely,

John Rogers
Associate Director

JR/MLR/js
cc: Bruce Suchomel, Environmental Protection Agency
Bureau of Land Management, Vernal
Duchesne County
Newfield Production Company, Myton
Well File
N:\O&G Reviewed Docs\ChronFile\UIC

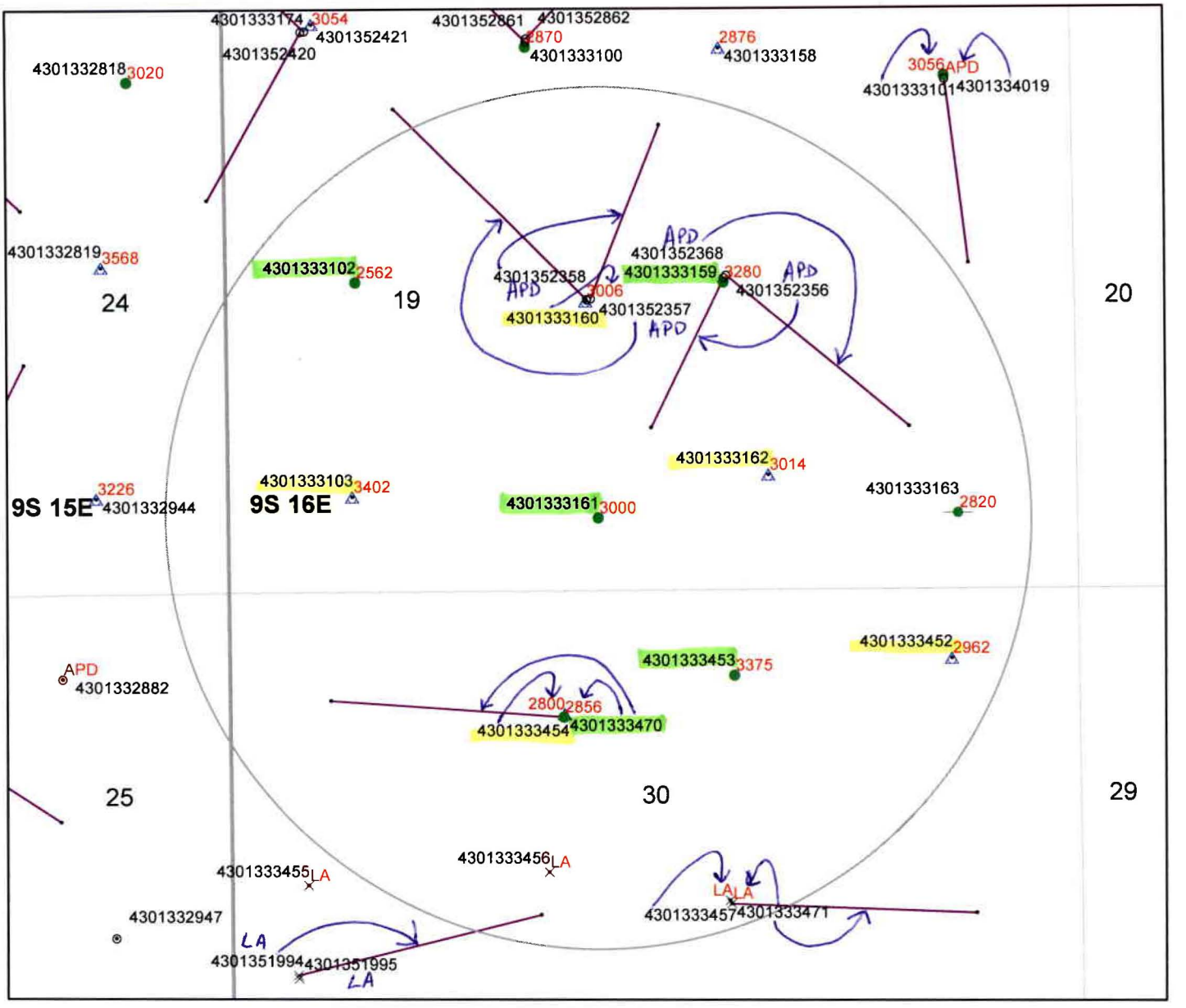

Cement Bond Tops
Federal 14-19-9-16
API #43-013-33161
UIC-415.10

(updated 4/11/2014)

Legend

Oil & Gas Well Type

- APD-Approved Permit
- DRL-Spudded (Drilling Commenced)
- GIW-Gas Injection Well
- GSW-Gas Storage Well
- LA-Location Abandoned
- LOC-New Location Well
- OPS-Drilling Operations Suspended
- PA-Pugged & Abandoned
- PGW-Producing Gas Well
- POW-Producing Oil Well
- RET-Returned APD
- SGW-Shut-in Gas Well
- SOW-Shut-in Oil Well
- TA-Temp Abandoned
- TW-Test Well
- WDW-Water Disposal Well
- WIW-WaterInjection Well
- WSW-Water Supply Well

4585 Depth to top of suitable cement bond

Well Bottom Hole Location

Oil & Gas Wells Hole Directional Path

Wells-CbltopsMaster 1-31-13

DNR Oil Gas Wells Buffer

County Boundaries

PLSS Sections

PLSS Townships

0 0.05 0.1 0.2 0.3 0.4 Miles

N

DIVISION OF OIL, GAS AND MINING
UNDERGROUND INJECTION CONTROL PROGRAM
PERMIT
STATEMENT OF BASIS

Applicant: Newfield Production Company **Well:** Federal 14-19-9-16

Location: 19/9S/16E **API:** 43-013-33161

Ownership Issues: The proposed well is located on BLM land. The well is located in the Greater Monument Butte Unit. Lands in the one-half mile radius of the well are administered by the BLM. The Federal Government is the mineral owner within the area of review (AOR). Newfield and other various individuals hold the leases in the unit. Newfield has provided a list of all surface, mineral and lease holders in the half-mile radius. Newfield is the operator of the Greater Monument Butte Unit. Newfield has submitted an affidavit stating that all owners and interest owners have been notified of their intent.

Well Integrity: The proposed well has surface casing set at 322 feet and has a cement top at the surface. A 5½ inch production casing is set at 5,993 feet. The cement bond log is somewhat problematic but appears to demonstrate adequate bond in this well up to about 3,000 feet or higher. A 2 7/8 inch tubing with a packer will be set at 4,730 feet. Higher perforations may be opened at a later date. A mechanical integrity test will be run on the well prior to injection. Based on surface locations, at the time of this revision (4/11/2014), there are 5 producing wells, 5 injection wells, and 1 shut-in well in the AOR. Additionally, there is 1 approved surface location inside the AOR, from which a directional well will be drilled to a bottom hole location outside the AOR. All of the existing wells have evidence of adequate casing and cement for the proposed injection interval.

Ground Water Protection: As interpreted from the Utah Geological Survey's DOE Project-Uinta Basin Water Draft Map (Paul B. Anderson, December 2, 2011), the base of moderately saline water (3000-10,000 mg/l TDS) is at a depth of approximately 2600 feet. Injection shall be limited to the interval between 3,875 feet and 5,990 feet in the Green River Formation. Information submitted by Newfield indicates that the fracture gradient for the 14-19-9-16 well is 0.81 psi/ft., which was the lowest reported fracture gradient for the injection zone. The resulting minimum fracture pressure for the proposed injection interval is 1,759 psig. The requested maximum pressure is 1,759 psig. The anticipated average injection pressure is 1100 psig. Injection at this pressure should not initiate any new fractures or propagate existing fractures in the adjacent confining intervals. Any ground water present should be adequately protected.

Oil/Gas& Other Mineral Resources Protection: The Board of Oil, Gas & Mining approved the Greater Monument Butte Unit on December 1, 2009. Correlative rights issues were addressed at this time. Previous reviews in this area indicate that other mineral resources in the area have been protected or are not at issue.

Bonding: Bonded with the BLM

Actions Taken and Further Approvals Needed: A notice of agency action has been sent to the Salt Lake Tribune and the Uinta Basin Standard. A casing/tubing pressure test will be required prior to injection. It is recommended that approval of this application be granted.

Note: Applicable technical publications concerning water resources in the general vicinity of this project have been reviewed and taken into consideration during the permit review process.

Reviewer(s): Mark Reinbold Date: 2/5/2014 (revised 4/11/2014)

4770 S. 5600 W.
P.O. BOX 704005
WEST VALLEY CITY, UTAH 84170
FED. TAX I.D.# 87-0217663
801-204-6910

The Salt Lake Tribune MEDIAone Deseret News

PROOF OF PUBLICATION

CUSTOMER'S COPY

CUSTOMER NAME AND ADDRESS	ACCOUNT NUMBER	DATE
DIV OF OIL-GAS & MINING, Rose Nolton 1594 W NORTH TEMP #1210 P.O. BOX 145801 SALT LAKE CITY, UT 84114	9001402352	12/13/2013

ACCOUNT NAME	
DIV OF OIL-GAS & MINING,	
TELEPHONE	ADORDER
8015385340	0000927358
SCHEDULE	
Start 12/13/2013	End 12/13/2
CUST. REF. NO.	
Newfield Cause UIC-415	
CAPTION	
BEFORE THE DIVISION OF OIL, GAS AND MINING DEPARTME	
SIZE	
94 Lines	3.00
TIMES	
3	
MISC. CHARGES	

RECEIVED
DEC 20 2013
DIV. OF OIL, GAS & MINING

AFFIDAVIT OF PUBLICATION

BEFORE THE DIVISION OF OIL, GAS AND MINING
DEPARTMENT OF NATURAL RESOURCES
STATE OF UTAH
NOTICE OF AGENCY ACTION CAUSE NO. UIC-415

IN THE MATTER OF THE APPLICATION OF NEWFIELD PRODUCTION COMPANY FOR ADMINISTRATIVE APPROVAL OF CERTAIN WELLS LOCATED IN SECTIONS 16, 17, 18, 19, 20, 21, 23, and 24, TOWNSHIP 9 SOUTH, RANGE 16 EAST, DUCHESNE COUNTY, UTAH, AS CLASS II INJECTION WELLS.

THE STATE OF UTAH TO ALL PERSONS INTERESTED IN THE ABOVE ENTITLED MATTER.

Notice is hereby given that the Division of Oil, Gas and Mining (the "Division") is commencing an informal adjudicative proceeding to consider the application of Newfield Production Company, 1001 17th Street, Suite 2000, Denver, Colorado 80202, telephone 303-893-0102, for administrative approval of the following wells located in Duchesne County, Utah, for conversion to Class II injection wells:

Greater Monument Butte Unit:
State 2-16-9-16 well located in NW/4 NE/4, Section 16, Township 9 South, Range 16 East
API 43-013-33846
State 13-16-9-16 well located in SW/4 SW/4, Section 16, Township 9 South, Range 16 East
API 43-013-33853
Castle Peak 32-16 well located in SW/4 NE/4, Section 16, Township 9 South, Range 16 East
API 43-013-30650
Federal 10-17-9-16 well located in NW/4 SE/4, Section 17, Township 9 South, Range 16 East
API 43-013-33033
Federal 12-17-9-16 well located in NW/4 SW/4, Section 17, Township 9 South, Range 16 East
API 43-013-33035
Federal 16-18-9-16 well located in SE/4 SE/4, Section 18, Township 9 South, Range 16 East
API 43-013-32922
Federal 2-19-9-16 well located in NW/4 NE/4, Section 19, Township 9 South, Range 16 East
API 43-013-33063
Federal 6-19-9-16 well located in SE/4 NW/4, Section 19, Township 9 South, Range 16 East
API 43-013-33100
Federal 12-19-9-16 well located in NW/4 SW/4, Section 19, Township 9 South, Range 16 East
API 43-013-33102
Federal 14-19-9-16 well located in SE/4 SW/4, Section 19, Township 9 South, Range 16 East
API 43-013-33161
Federal 16-19-9-16 well located in SE/4 SE/4, Section 19, Township 9 South, Range 16 East
API 43-013-33163
Federal 8-20-9-16 well located in SE/4 NE/4, Section 20, Township 9 South, Range 16 East
API 43-013-33107
Federal 3-21-9-16 well located in NE/4 NW/4, Section 21, Township 9 South, Range 16 East
API 43-013-33019
Federal 4-21-9-16 well located in NW/4 NW/4, Section 21, Township 9 South, Range 16 East
API 43-013-33069
Federal 8-21-9-16 well located in SE/4 NE/4, Section 21, Township 9 South, Range 16 East
API 43-013-33023
Federal 2-23-9-16 well located in NW/4 NE/4, Section 23, Township 9 South, Range 16 East
API 43-013-33003
Castle Peak Federal 6-23 well located in SE/4 NW/4, Section 23, Township 9 South, Range 16 East
API 43-013-30873
Federal 8-23-9-16 well located in SE/4 NE/4, Section 23, Township 9 South, Range 16 East
API 43-013-32961
Federal 14-24-9-16 well located in SE/4 SW/4, Section 24, Township 9 South, Range 16 East
API 43-013-33343

The proceeding will be conducted in accordance with Utah Admin. R649-10, Administrative Procedures.

Selected zones in the Green River Formation will be used for water injection. The maximum requested injection pressures and rates will be determined based on fracture gradient information submitted by Newfield Production Company.

Any person desiring to object to the application or otherwise intervene in the proceeding, must file a written protest or notice of intervention with the Division within fifteen days following publication of this notice. The Division's Presiding Officer for the proceeding is Brad Hill, Permitting Manager, at P.O. Box 145801, Salt Lake City, UT 84114-5801, phone number (801) 538-5340. If such a protest or notice of intervention is received, a hearing will be scheduled in accordance with the aforementioned administrative procedural rules. Protestants and/or intervenors should be prepared to demonstrate at the hearing how this matter affects their interests.

Dated this 11th day of December, 2013.

STATE OF UTAH
DIVISION OF OIL, GAS & MINING
/s/
Brad Hill
Permitting Manager

923758 UPAXLP

AS NEWSPAPER AGENCY COMPANY, LLC dba MEDIAONE OF UTAH LEGAL BOOKER, LC
BEFORE THE DIVISION OF OIL, GAS AND MINING DEPARTMENT OF NATURAL RES
CAUSE NO. UIC-415 IN THE MATTER OF THE APPLICA FOR **DIV OF OIL-GAS & MIN**
COMPANY, LLC dba MEDIAONE OF UTAH, AGENT FOR THE SALT LAKE TRIBUNE AND D
ENGLISH LANGUAGE WITH GENERAL CIRCULATION IN UTAH, AND PUBLISHED IN SALT
NOTICE IS ALSO POSTED ON UTAHLEGALS.COM ON THE SAME DAY AS THE FIRST NEWSPAPER PUBLICATION DATE AND REMAINS ON UTAHLEGALS.COM INDEFINATELY. COMPLIES WITH UTAH DIGITAL SIGNATURE ACT UTAH CODE 46-2-101; 46-3-104.

PUBLISHED ON Start 12/13/2013 End 12/13/2013

SIGNATURE

DATE 12/13/2013

VIRGINIACRAFT
NotaryPublic StateofUtah
Commission#581489
MyCommissionExpires
January12,2014

Virginia Craft
NOTARY SIGNATURE

THIS IS NOT A STATEMENT BUT A "PROOF OF PUBLICATION"
PLEASE PAY FROM BILLING STATEMENT

2210 | R606 | 131

AFFIDAVIT OF PUBLICATION

County of Duchesne,
STATE OF UTAH

I, Kevin Ashby on oath, say that I am the PUBLISHER of the Uintah Basin Standard, a weekly newspaper of general circulation, published at Roosevelt, State and County aforesaid, and that a certain notice, a true copy of which is hereto attached, was published in the full issue such newspaper for 1 consecutive issues, and that the first publication was on the 17 day of December, 20 13, and that the last publication of such notice was in the issue of such newspaper dated the 17 day of December, 20 13, and that said notice was published on Utahlegals.com on the same day as the first newspaper publication and the notice remained on Utahlegals.com until the end of the scheduled run.

Kevin Ashby
Publisher

Subscribed and sworn to before me on this 23 day of December, 20 13

by Kevin Ashby.

Bonnie Parrish
Notary Public

Notary Public
BONNIE PARRISH
Commission #653427
My Commission Expires
February 23, 2016
State of Utah

NOTICE OF AGENCY ACTION CAUSE NO. UIC-415

BEFORE THE DIVISION OF OIL, GAS AND MINING, DEPARTMENT OF NATURAL RESOURCES, STATE OF UTAH.

IN THE MATTER OF THE APPLICATION OF NEWFIELD PRODUCTION COMPANY FOR ADMINISTRATIVE APPROVAL OF CERTAIN WELLS LOCATED IN SECTIONS 16, 17, 18, 19, 20, 21, 23, and 24, TOWNSHIP 9 SOUTH, RANGE 16 EAST, DUCHESNE COUNTY, UTAH, AS CLASS II INJECTION WELLS.

THE STATE OF UTAH TO ALL PERSONS INTERESTED IN THE ABOVE ENTITLED MATTER.

Notice is hereby given that the Division of Oil, Gas and Mining (the "Division") is commencing an informal adjudicative proceeding to consider the application of Newfield Production Company, 1001 17th Street,

Continued on next page

Continued from previous page

Suite 2000, Denver, Colorado 80202, telephone 303-893-0102, for administrative approval of the following wells located in Duchesne County, Utah, for conversion to Class II injection wells:

'Greater Monument Butte Unit:

State 2-16-9-16 well located in NW/4 NE/4, Section 16, Township 9 South, Range 16 East
API 43-013-33846

State 13-16-9-16 well located in SW/4 SW/4, Section 16, Township 9 South, Range 16 East
API 43-013-33853

Castle Peak 32-16 well located in SW/4 NE/4, Section 16, Township 9 South, Range 16 East
API 43-013-30650

Federal 10-17-9-16 well located in NW/4 SE/4, Section 17, Township 9 South, Range 16 East
API 43-013-33033

Federal 12-17-9-16 well located in NW/4 SW/4, Section 17, Township 9 South, Range 16 East
API 43-013-33035

Federal 16-18-9-16 well located in SE/4 SE/4, Section 18, Township 9 South, Range 16 East
API 43-013-32922

Federal 2-19-9-16 well located in NW/4 NE/4, Section 19, Township 9 South, Range 16 East
API 43-013-33063

Federal 6-19-9-16 well located in SE/4 NW/4, Section 19, Township 9 South, Range 16 East
API 43-013-33100

Federal 12-19-9-16 well located in NW/4 SW/4, Section 19, Township 9 South, Range 16 East
API 43-013-33102

Federal 14-19-9-16 well located in SE/4 SW/4, Section 19, Township 9 South,

Any person desi ing to object to tl application or otl erwise intervene the proceeding, mu file a written prote or notice of interve tion with the Divisi within fifteen da following publicati of this notice. The D vision's Presiding C ficer for the proceedi is Brad Hill, Permitti Manager, at P.O. B 145801, Salt Lake Ci UT 84114-5801, pho number (801) 53 5340. If such a prot or notice of interve tion is received, a he ing will be schedul in accordance wi the aforemention administrative pr cedural rules. Prot tants and/or interve ers should be prepar to demonstrate at hearing how this mat affects their interes

Dated this 11th c of December, 2013

STATE OF UTA
DIVISION OF O GAS & MINING

/s/
Brad Hill
Permitting Mana

Published in Uintah Basin Stand December 17, 201

RECEIVED
DEC 24 2013
DIV. OF OIL, GAS & MINING

Federal 14-19-9-16 well located in SE/4 SW/4, Section 19, Township 9 South, Range 16 East
API 43-013-33161
Federal 16-19-9-16 well located in SE/4 SE/4, Section 19, Township 9 South, Range 16 East
API 43-013-33163
Federal 8-20-9-16 well located in SE/4 NE/4, Section 20, Township 9 South, Range 16 East
API 43-013-33107
Federal 3-21-9-16 well located in NE/4 NW/4, Section 21, Township 9 South, Range 16 East
API 43-013-33019
Federal 4-21-9-16 well located in NW/4 NW/4, Section 21, Township 9 South, Range 16 East
API 43-013-33069
Federal 8-21-9-16 well located in SE/4 NE/4, Section 21, Township 9 South, Range 16 East
API 43-013-33023
Federal 2-23-9-16 well located in NW/4 NE/4, Section 23, Township 9 South, Range 16 East
API 43-013-33003
Castle Peak Federal 6-23 well located in SE/4 NW/4, Section 23, Township 9 South, Range 16 East
API 43-013-30873
Federal 8-23-9-16 well located in SE/4 NE/4, Section 23, Township 9 South, Range 16 East
API 43-013-32961
Federal 14-24-9-16 well located in SE/4 SW/4, Section 24, Township 9 South, Range 16 East
API 43-013-33343

The proceeding will be conducted in accordance with Utah Admin. R649-10, Administrative Procedures.

Selected zones in the Green River Formation will be used for water injection. The maximum requested injection pressures and rates will be determined based on fracture gradient information submitted by Newfield Production Company.

BEFORE THE DIVISION OF OIL, GAS AND MINING
DEPARTMENT OF NATURAL RESOURCES
STATE OF UTAH
NOTICE OF AGENCY ACTION
CAUSE NO. UIC-415

IN THE MATTER OF THE APPLICATION OF NEWFIELD PRODUCTION COMPANY FOR ADMINISTRATIVE APPROVAL OF CERTAIN WELLS LOCATED IN SECTIONS 16, 17, 18, 19, 20, 21, 23, and 24, TOWNSHIP 9 SOUTH, RANGE 16 EAST, DUCHESNE COUNTY, UTAH, AS CLASS II INJECTION WELLS.

THE STATE OF UTAH TO ALL PERSONS INTERESTED IN THE ABOVE ENTITLED MATTER.

Notice is hereby given that the Division of Oil, Gas and Mining (the "Division") is commencing an informal adjudicative proceeding to consider the application of Newfield Production Company, 1001 17th Street, Suite 2000, Denver, Colorado 80202, telephone 303-893-0102, for administrative approval of the following wells located in Duchesne County, Utah, for conversion to Class II injection wells:

Greater Monument Butte Unit:

State 2-16-9-16 well located in NW/4 NE/4, Section 16, Township 9 South, Range 16 East
API 43-013-33846
State 13-16-9-16 well located in SW/4 SW/4, Section 16, Township 9 South, Range 16 East
API 43-013-33853
Castle Peak 32-16 well located in SW/4 NE/4, Section 16, Township 9 South, Range 16 East
API 43-013-30650
Federal 10-17-9-16 well located in NW/4 SE/4, Section 17, Township 9 South, Range 16 East
API 43-013-33033
Federal 12-17-9-16 well located in NW/4 SW/4, Section 17, Township 9 South, Range 16 East
API 43-013-33035
Federal 16-18-9-16 well located in SE/4 SE/4, Section 18, Township 9 South, Range 16 East
API 43-013-32922
Federal 2-19-9-16 well located in NW/4 NE/4, Section 19, Township 9 South, Range 16 East
API 43-013-33063
Federal 6-19-9-16 well located in SE/4 NW/4, Section 19, Township 9 South, Range 16 East
API 43-013-33100
Federal 12-19-9-16 well located in NW/4 SW/4, Section 19, Township 9 South, Range 16 East
API 43-013-33102
Federal 14-19-9-16 well located in SE/4 SW/4, Section 19, Township 9 South, Range 16 East
API 43-013-33161
Federal 16-19-9-16 well located in SE/4 SE/4, Section 19, Township 9 South, Range 16 East
API 43-013-33163
Federal 8-20-9-16 well located in SE/4 NE/4, Section 20, Township 9 South, Range 16 East
API 43-013-33107
Federal 3-21-9-16 well located in NE/4 NW/4, Section 21, Township 9 South, Range 16 East
API 43-013-33019
Federal 4-21-9-16 well located in NW/4 NW/4, Section 21, Township 9 South, Range 16 East
API 43-013-33069
Federal 8-21-9-16 well located in SE/4 NE/4, Section 21, Township 9 South, Range 16 East
API 43-013-33023
Federal 2-23-9-16 well located in NW/4 NE/4, Section 23, Township 9 South, Range 16 East
API 43-013-33003

Castle Peak Federal 6-23 well located in SE/4 NW/4, Section 23, Township 9 South, Range 16 East
API 43-013-30873
Federal 8-23-9-16 well located in SE/4 NE/4, Section 23, Township 9 South, Range 16 East
API 43-013-32961
Federal 14-24-9-16 well located in SE/4 SW/4, Section 24, Township 9 South, Range 16 East
API 43-013-33343

The proceeding will be conducted in accordance with Utah Admin. R649-10, Administrative Procedures.

Selected zones in the Green River Formation will be used for water injection. The maximum requested injection pressures and rates will be determined based on fracture gradient information submitted by Newfield Production Company.

Any person desiring to object to the application or otherwise intervene in the proceeding, must file a written protest or notice of intervention with the Division within fifteen days following publication of this notice. The Division's Presiding Officer for the proceeding is Brad Hill, Permitting Manager, at P.O. Box 145801, Salt Lake City, UT 84114-5801, phone number (801) 538-5340. If such a protest or notice of intervention is received, a hearing will be scheduled in accordance with the aforementioned administrative procedural rules. Protestants and/or interveners should be prepared to demonstrate at the hearing how this matter affects their interests.

Dated this 11th day of December, 2013.

STATE OF UTAH
DIVISION OF OIL, GAS & MINING

Brad Hill
Permitting Manager

Newfield Production Company

STATE 2-16-9-16, STATE 13-16-9-16, CASTLE PEAK 32-16, FEDERAL 10-17-9-16, FEDERAL 12-17-9-16, FEDERAL 16-18-9-16, FEDERAL 2-19-9-16, FEDERAL 6-19-9-16, FEDERAL 12-19-9-16, FEDERAL 14-19-9-16, FEDERAL 16-19-9-16, FEDERAL 8-20-9-16, FEDERAL 3-21-9-16, FEDERAL 4-21-9-16, FEDERAL 8-21-9-16, FEDERAL 2-23-9-16, CASTLE PEAK FEDERAL 6-23, FEDERAL 8-23-9-16, FEDERAL 14-24-9-16

Cause No. UIC-415

Publication Notices were sent to the following:

Newfield Production Company
1001 17th Street, Suite 2000
Denver, CO 80202

Uintah Basin Standard
268 South 200 East
Roosevelt, UT 84066
via e-mail ubs@ubstandard.com

Salt Lake Tribune
P O Box 45838
Salt Lake City, UT 84145
via e-mail naclegal@mediaoneutah.com

Vernal Office
Bureau of Land Management
170 South 500 East
Vernal, UT 84078

SITLA
675 E 500 S Ste 500
Salt Lake City, UT 84102-2818

Duchesne County Planning
P O Box 317
Duchesne, UT 84021-0317

Bruce Suchomel
US EPA Region 8
MS 8P-W-GW
1595 Wynkoop Street
Denver, CO 80202-1129

Newfield Production Company
Rt 3 Box 3630
Myton, UT 84052

Jan Swart

GARY R. HERBERT
Governor

SPENCER J. COX
Lieutenant Governor

State of Utah

DEPARTMENT OF NATURAL RESOURCES

MICHAEL R. STYLER
Executive Director

Division of Oil, Gas and Mining

JOHN R. BAZA
Division Director

December 12, 2013

Via e-mail: legals@ubstandard.com

Uintah Basin Standard
268 South 200 East
Roosevelt, UT 84066

Subject: Notice of Agency Action – Newfield Production Company Cause No. UIC-415

To Whom It May Concern:

Enclosed is a copy of the referenced Notice of Agency Action. Please publish the Notice, once only, as soon as possible. Please notify me via e-mail of the date it will be published. My e-mail address is: jsweet@utah.gov.

Please send proof of publication and billing to:

Division of Oil, Gas and Mining
PO Box 145801
Salt Lake City, UT 84114-5801

Sincerely,

Jean Sweet

Jean Sweet
Executive Secretary

Enclosure

[redacted]

Jean Sweet <jsweet@utah.gov>

Re: Notice of Agency Action – Newfield Production Company Cause No. UIC-415

1 message

UB Standard Legals <ubslegals@ubmedia.biz> Thu, Dec 12, 2013 at 1:22 PM
To: Jean Sweet <jsweet@utah.gov>

On 12/12/2013 11:59 AM, Jean Sweet wrote:

> Enclosed is a copy of the referenced Notice of Agency Action. Please publish the Notice, once only, as soon as possible. Please notify me via e-mail of the date it will be published. My e-mail address is: jsweet@utah.gov.
>
> ---
>
> Please send proof of publication and billing to:
>
> Division of Oil, Gas and Mining
>
> PO Box 145801
>
> Salt Lake City, UT 84114-5801
>
> Sincerely,
>
> Jean
> –
> Jean Sweet
> Executive Secretary
> Utah Division of Oil, Gas and Mining
> 801-538-5329

This will publish Dec. 17. Thank you. Merry Christmas.
Cindy

GARY R. HERBERT
Governor

SPENCER J. COX
Lieutenant Governor

State of Utah

DEPARTMENT OF NATURAL RESOURCES

MICHAEL R. STYLER
Executive Director

Division of Oil, Gas and Mining

JOHN R. BAZA
Division Director

December 12, 2013

VIA E-MAIL naclegal@mediaoneutah.com

Salt Lake Tribune
P. O. Box 45838
Salt Lake City, UT 84145

Subject: Notice of Agency Action – Newfield Production Company Cause No. UIC-415

To Whom It May Concern:

Enclosed is a copy of the referenced Notice of Agency Action. Please publish the Notice, once only, as soon as possible. Please notify me via e-mail of the date it will be published. My e-mail address is: jsweet@utah.gov.

Please send proof of publication and billing for **account #9001402352** to:

Division of Oil, Gas and Mining
PO Box 145801
Salt Lake City, UT 84114-5801

Sincerely,

Jean Sweet

Jean Sweet
Executive Secretary

Enclosure

[redacted]

Jean Sweet <jsweet@utah.gov>

Proof for Notice

1 message

Stowe, Ken <naclegal@mediaoneutah.com> Thu, Dec 12, 2013 at 12:34 PM
Reply-To: "Stowe, Ken" <naclegal@mediaoneutah.com>
To: jsweet@utah.gov

AD# 927358
Run SL Trib & Des News 12/13
Cost $478.76
Thank You

OrderConf.pdf
185K

The Salt Lake Tribune MEDIAONE Deseret News

Remit to: P.O. Box 704005
West Valley City, UT 84170

Order Confirmation for Ad #0000927358-01

Client	DIV OF OIL-GAS & MINING	**Payor Customer**	DIV OF OIL-GAS & MINING
Client Phone	801-538-5340	**Payor Phone**	801-538-5340
Account#	9001402352	**Payor Account**	9001402352
Address	1594 W NORTH TEMP #1210,P.O. BOX 145801 SALT LAKE CITY, UT 84114 USA	**Payor Address**	1594 W NORTH TEMP #1210,P.O. BO) SALT LAKE CITY, UT 84114
Fax	801-359-3940	**Ordered By**	**Acct. Exec**
EMail	juliecarter@utah.gov	Jean	kstowe

Total Amount	**$478.76**			
Payment Amt	**$0.00**	**Tear Sheets**	**Proofs**	**Affidavits**
Amount Due	**$478.76**	0	0	1

Payment Method **PO Number** Newfield Cause UIC-4

Confirmation Notes:

Text: Jean

Ad Type	Ad Size	Color
Legal Liner	3.0 X 94 Li	<NONE>

Product	Placement	Position
Salt Lake Tribune::	Legal Liner Notice - 0998	998-Other Legal Notices
Scheduled Date(s):	12/13/2013	
Product	**Placement**	**Position**
Deseret News::	Legal Liner Notice - 0998	998-Other Legal Notices
Scheduled Date(s):	12/13/2013	
Product	**Placement**	**Position**
utahlegals.com::	utahlegals.com	utahlegals.com
Scheduled Date(s):	12/13/2013	

Order Confirmation for Ad #0000927358-01

Ad Content Proof Actual Size

NEWFIELD

Newfield Exploration Company
1001 17th Street | Suite 2000
Denver, Colorado 80202
PH 303-893-0102 | FAX 303-893-0103

December 5, 2013

Mr. Mark Reinbold
State of Utah
Division of Oil, Gas and Mining
1594 W North Temple
Salt Lake City, Utah 84114-5801

RE: Permit Application for Water Injection Well
Federal #14-19-9-16
Monument Butte Field, Lease #UTU-74391
Section 19-Township 9S-Range 16E
Duchesne County, Utah

Dear Mr. Reinbold:

Newfield Production Company herein requests approval to convert the Federal #14-19-9-16 from a producing oil well to a water injection well in the Monument Butte (Green River) Field.

I hope you find this application complete; however, if you have any questions or require additional information, please contact me at (303) 893-0102.

Sincerely,

Jill L Loyle
Regulatory Associate

RECEIVED
DEC 06 2013
DIV. OF OIL, GAS & MINING

NEWFIELD PRODUCTION COMPANY

APPLICATION FOR APPROVAL OF CLASS II INJECTION WELL

FEDERAL #14-19-9-16

MONUMENT BUTTE FIELD (GREEN RIVER) FIELD

LEASE #UTU-74391

DECEMBER 5, 2013

TABLE OF CONTENTS

LETTER OF INTENT
COVER PAGE
TABLE OF CONTENTS
UIC FORM 1 – APPLICATION FOR INJECTION WELL
WELLBORE DIAGRAM OF PROPOSED INJECTION
WORK PROCEDURE FOR INJECTION CONVERSION
COMPLETED RULE R615-5-1 QUESTIONNAIRE
COMPLETED RULE R615-5-2 QUESTIONNAIRE

ATTACHMENT A	ONE-HALF MILE RADIUS MAP
ATTACHMENT A-1	WELL LOCATION PLAT
ATTACHMENT B	LIST OF SURFACE OWNERS WITHIN ONE-HALF MILE RADIUS
ATTACHMENT C	CERTIFICATION FOR SURFACE OWNER NOTIFICATION
ATTACHMENT E	WELLBORE DIAGRAM – FEDERAL #14-19-9-16
ATTACHMENT E-1	WELLBORE DIAGRAM – FEDERAL #10-19-9-16
ATTACHMENT E-2	WELLBORE DIAGRAM – FEDERAL #11-19-9-16
ATTACHMENT E-3	WELLBORE DIAGRAM – FEDERAL #12-19-9-16
ATTACHMENT E-4	WELLBORE DIAGRAM – FEDERAL #13-19-9-16
ATTACHMENT E-5	WELLBORE DIAGRAM – FEDERAL #15-19-9-16
ATTACHMENT E-6	WELLBORE DIAGRAM – FEDERAL #16-19-9-16
ATTACHMENT E-7	WELLBORE DIAGRAM – FEDERAL #1-30-9-16
ATTACHMENT E-8	WELLBORE DIAGRAM – FEDERAL #2-30-9-16
ATTACHMENT E-9	WELLBORE DIAGRAM – FEDERAL #3-30-9-16
ATTACHMENT E-10	WELLBORE DIAGRAM – FEDERAL #4-30-9-16
ATTACHMENT F	WATER ANALYSIS
ATTACHMENT G	FRACTURE GRADIENT CALCULATIONS
ATTACHMENT G-1	FRACTURE REPORTS DATED – *2/17/2007 – 2/28/2007*
ATTACHMENT H	WORK PROCEDURE FOR PROPOSED PLUG AND ABANDON
ATTACHMENT H-1	WELLBORE DIAGRAM OF PROPOSED PLUGGED WELL

STATE OF UTAH
DIVISION OF OIL, GAS AND MINING

APPLICATION FOR INJECTION WELL - UIC FORM 1

OPERATOR Newfield Production Company
ADDRESS 1001 17th Street, Suite 2000
Denver, Colorado 80202

Well Name and number: Federal #14-19-9-16
Field or Unit name: Monument Butte (Green River) Lease No. UTU-74391
Well Location: QQ SESW section 19 township 9S range 16E county Duchesne

Is this application for expansion of an existing project? ..... Yes [X] No [ ]
Will the proposed well be used for: Enhanced Recovery? ..... Yes [X] No [ ]
Disposal? ..... Yes [ ] No [X]
Storage? ..... Yes [ ] No [X]
Is this application for a new well to be drilled? ..... Yes [ ] No [X]
If this application is for an existing well,
has a casing test been performed on the well?..... Yes [ ] No [X]
Date of test:
API number: 43-013-33161

Proposed injection interval: from 3875 to 5990
Proposed maximum injection: rate 500 bpd pressure 1759 psig
Proposed injection zone contains [x] oil, [ ] gas, and/or [ ] fresh water within 1/2 mile of the well.

IMPORTANT: Additional information as required by R615-5-2 should accompany this form.

List of Attachments: Attachments "A" through "H-1"

I certify that this report is true and complete to the best of my knowledge.

Name: Jill L Loyle Signature
Title Regulatory Associate Date 12/5/13
Phone No. 303-383-4135

(State use only)
Application approved by Title
Approval Date

Comments:

FEDERAL 14-19-9-16

Spud Date: 01/23/07
Put on Production: 02/27/07

GL: 6245' KB: 6257'

Proposed Injection
Wellbore Diagram

Initial Production: BOPD,
MCFD, BWPD

SURFACE CASING

CSG SIZE: 8-5/8"
GRADE: J-55
WEIGHT: 24#
LENGTH: 7 jts. (310.59')
DEPTH LANDED: 322.44' KB
HOLE SIZE:12-1/4"
CEMENT DATA: 160 sxs Class "G" cmt, est 2.25 bbls cmt to surf.

PRODUCTION CASING

CSG SIZE: 5-1/2"
GRADE: J-55
WEIGHT: 15.5#
LENGTH: 137 jts. (5979.73')
DEPTH LANDED: 5992.98' KB
HOLE SIZE: 7-7/8"
CEMENT DATA: 300 sxs Prem. Lite II mixed & 450 sxs 50/50 POZ.
CEMENT TOP: 136'

TUBING

SIZE/GRADE/WT.: 2-7/8" / J-55 / 6.5#
NO. OF JOINTS: 174 jts (5415.22')
TUBING ANCHOR: 5427.' KB
NO. OF JOINTS: 2 jts (60.30')
SEATING NIPPLE: 2-7/8" (1.10')
SN LANDED AT: 5490' KB
NO. OF JOINTS: 2 jts (60.4')
TOTAL STRING LENGTH: EOT @ 5552.' KB

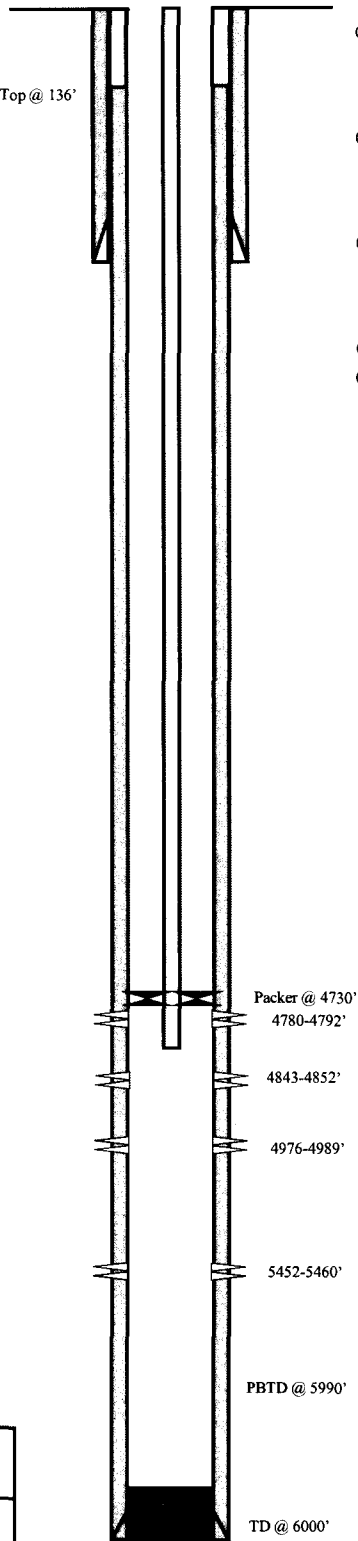

FRAC JOB

02/21/07	5452-5460'	**Frac CP1 sands as follows:** 34903# 20/40 sand in 471 bbls Lightning 17 frac fluid. Treated @ avg press of 2080 psi w/avg rate of 24.8 BPM. ISIP 1839 psi. Calc flush: 5450 gal. Actual flush: 4872 gal.
02/21/07	4976-4989'	**Frac A1 sands as follows:** 80502# 20/40 sand in 597 bbls Lightning 17 frac fluid. Treated @ avg press of 2245 psi w/avg rate of 24.6 BPM. ISIP 2369 psi. Calc flush: 4974 gal. Actual flush: 4536 gal.
02/22/07	4780-4852'	**Frac B1 & B2 sands as follows:** 159255# 20/40 sand in 1026 bbls Lightning17 frac fluid. Treated @ avg press of 1675 psi w/avg rate of 24.8 BPM. ISIP 1790 psi. Calc flush: 4778 gal. Actual flush: 4662 gal.
03-29-07	Pump Change	Rod & Tubing details updated.
01/28/11		Parted Rods. Rod & tubing updated.

PERFORATION RECORD

02/16/07	5452-5460'	4 JSPF	32 holes
02/21/07	4976-4989'	4 JSPF	52 holes
02/21/07	4843-4852'	4 JSPF	36 holes
02/21/07	4780-4792'	4 JSPF	48 holes

NEWFIELD

FEDERAL 14-19-9-16

452'FSL & 2258' FWL

SE/SW Section 19-T9S-R16E

Duchesne Co, Utah

API #43-013-33161; Lease # UTU-74391

JL 12/3/2013

WORK PROCEDURE FOR INJECTION CONVERSION

1. Rig up hot oil truck to casing. Pump water. Unseat pump. Flush rods. Trip out of hole with rods and pump.

2. Trip out of hole with tubing, breaking and doping every connection. Trip in hole with packer and tubing. Rig up water truck to casing. Pump packer fluid. Set packer.

3. Test casing and packer.

4. Rig down and move out.

REQUIREMENTS FOR INJECTION OF FLUIDS INTO RESERVOIRS
RULE R615-5-1

1. **Operations to increase ultimate recovery, such as cycling of gas, the maintenance of pressure, the introduction of gas, water or other substances into a reservoir for the purpose of secondary or other enhanced recovery or for storage and the injection of water into any formation for the purpose of water disposal shall be permitted only by order of the Board after notice and hearing.**

2. **A request for agency action for authority for the injection of gas, liquified petroleum gas, air, water or any other medium into any formation for any reason, including but not necessarily limited to the establishment of or the expansion of waterflood projects, enhanced recovery projects, and pressure maintenance projects shall contain:**

2.1 The name and address of the operator of the project.

Newfield Production Company
1001 17th Street, Suite 2000
Denver, Colorado 80202

2.2 A plat showing the area involved and identifying all wells, including all proposed injection wells, in the project area and within one-half mile of the project area.

See Attachment A.

2.3 A full description of the particular operation for approval is requested.

Approval is requested to convert the Federal #14-19-9-16 from a producing oil well to a water injection well in Monument Butte (Green River) Field.

2.4 A description of the pools from which the identified wells are producing or have produced.

The proposed injection well will inject into the Green River Formation.

2.5 The names, description and depth of the pool or pools to be affected.

The injection zone is in the Green River Formation. For the Federal #14-19-9-16 well, the proposed injection zone is from Garden Gulch to Wasatch (3875' - 5990'). The confining strata directly above and below the injection zones are the Garden Gulch and the top of the Wasatch Formation or TD, which ever is shallower. The Garden Gulch Marker top is at 3539' and the TD is at 6000'.

2.6 A copy of a log of a representative well completed in the pool.

The referenced log for the Federal #14-19-9-16 is on file with the Utah Division of Oil, Gas and Mining.

2.7 A statement as to the type of fluid to be used for injection, its source and the estimated amounts to be injected daily.

The primary type and source of fluid to be used for injection will be culinary water commingled with produced water. The average estimated injection of fluids will be at a rate of 300 BPD, and the estimated maximum injection will be at a rate of 500 BPD.

2.8 A list of all operators and surface owners within one-half mile radius of the proposed project.

See Attachment B.

2.9 An affidavit certifying that said operators or owners and surface owners within a one-half mile radius have been provided a copy of the petition for injection.

See Attachment C.

2.10 Any additional information the Board may determine is necessary to adequately review the petition.

Newfield Production Company will supply any additional information requested by the Utah Division of Oil, Gas and Mining.

4.0 Establish recovery projects may be expanded and additional wells placed on injection only upon authority from the Board after notice and hearing or by administrative approval.

This proposed injection well is on a State lease (Lease #UTU-74391) in the Monument Butte Federal (Green River) Field, and this request is for administrative approval.

REQUIREMENTS FOR CLASS II INJECTION WELLS INCLUDING WATER DISPOSAL, STORAGE AND ENHANCED RECOVERY WELLS
SECTION V – RULE R615-5-2

1. **Injection well shall be completed, equipped, operated, and maintained in a manner that will prevent pollution and damage to any USDW, or other resources and will confine injected fluids to the interval approved.**

2. **The application for an injection well shall include a properly completed Form DOGM-UIC-1 and the following:**

   2.1 **A plat showing the location of the injection well, all abandoned or active wells within a one-half mile radius of the proposed wells, and the surface owner and the operator of any lands or producing leases, respectively, within a one-half mile radius of the proposed injection well.**

   See Attachments A and B.

   2.2 **Copies of electrical or radioactive logs, including gamma ray logs, for the proposed well run prior to the installation of casing and indicating resistivity, spontaneous potential, caliper and porosity.**

   All logs are on file with the Utah Division of Oil, Gas and Mining.

   2.3 **A copy of a cement bond or comparable log run for the proposed injection well after casing was set and cemented.**

   A copy of the cement bond log is on file with the Utah Division of Oil, Gas and Mining.

   2.4 **Copies of logs already on file with the Division should be referenced, but need not be refiled.**

   All copies of logs are on file with the Utah Division of Oil, Gas and Mining.

   2.5 **A description of the casing or proposed casing program of the injection well and of the proposed method for testing the casing before use of the well.**

   The casing program is 8-5/8", 24# surface casing run to 322' KB, and 5-1/2", 15.5# casing run from surface to 5993' KB. A casing integrity test will be conducted at the time of conversion. See Attachment E.

   2.6 **A statement as to the type of fluid to be used for injection, its source and estimated amounts to be injected daily.**

   The primary type and source of fluid to be used for injection will be culinary water commingled with produced water. The estimated average rate of injection will be 300 BPD, and the estimated maximum rate of injection will be 500 BPD.

   2.7 **Standard laboratory analysis of the fluid to be injected, the fluid in the formation into which the fluid is being injected, and the compatibility of the fluids.**

   See Attachment F.

2.8 The proposed average and maximum injection pressures.

The proposed average injection pressure will be approximately 1100 psig and the maximum injection pressure will not exceed 1759 psig.

2.9 Evidence and data to support a finding that the proposed injection well will not initiate fractures through the overlying strata or a confining interval that could enable the injected fluid or formation fluid to enter the fresh water strata.

The minimum fracture gradient for the Federal #14-19-9-16, for existing perforations (4780' - 5460') calculates at 0.81 psig/ft. The maximum injection pressures will be limited so as not to exceed this gradient. A step rate test will be performed periodically to ensure we are below parting pressure. The proposed maximum injection pressure is 1759 psig. We may add additional perforations between 3539' and 6000'. See Attachments G and G-1.

2.10 Appropriate geological data on the injection interval and confining beds, including the geologic name, lithologic description, thickness, depth, and lateral extent.

In the Federal #14-19-9-16, the proposed injection zone (3875' - 5990') is in the Garden Gulch to the Wasatch of the Green River Formation. The reservoir is a very fine-grained sandstone with minor imbedded shale streaks. The estimated porosity is 13%. The members are composed of porous and permeable lenticular calcareous sandstone and low porosity carbonates and calcareous shale. The porous and lenticular sandstone varies in thickness from 0-31' and is confined to the Monument Butte Federal Field. Outside the Monument Butte Federal Field, the sandstone is composed of tight, very fine, silty, calcareous sandstone, less than 3' thick. The stratum confining the injection zone is composed of tight, moderately calcareous, sandy lacustrine shale. All of the confining strata are impermeable, and will effectively seal off the oil, gas, and water of the injection zone from any strata directly above or below it.

2.11 A review of the mechanical condition of each well within a one-half mile radius of the proposed injection well to assure that no conduit exists that could enable fluids to migrate up or down the wellbore and enter the improper intervals.

See Attachments E through E-10.

Additionally, the injection system will be equipped with high and low pressure shut down devices that will automatically shut in injection waters if a system blockage or leakage occurs. One way check valves will also ensure proper flow management. Relief valves will also be utilized for high-pressure relief.

2.12 An affidavit certifying that a copy of the application has been provided to all operators or owners, and surface owners within a one-half mile radius of the proposed injection well.

See Attachment C.

2.13 Any other information that the Board or Division may determine is necessary to adequately review the application.

Newfield Production Company will supply any requested information to the Board or Division.

ATTACHMENT A

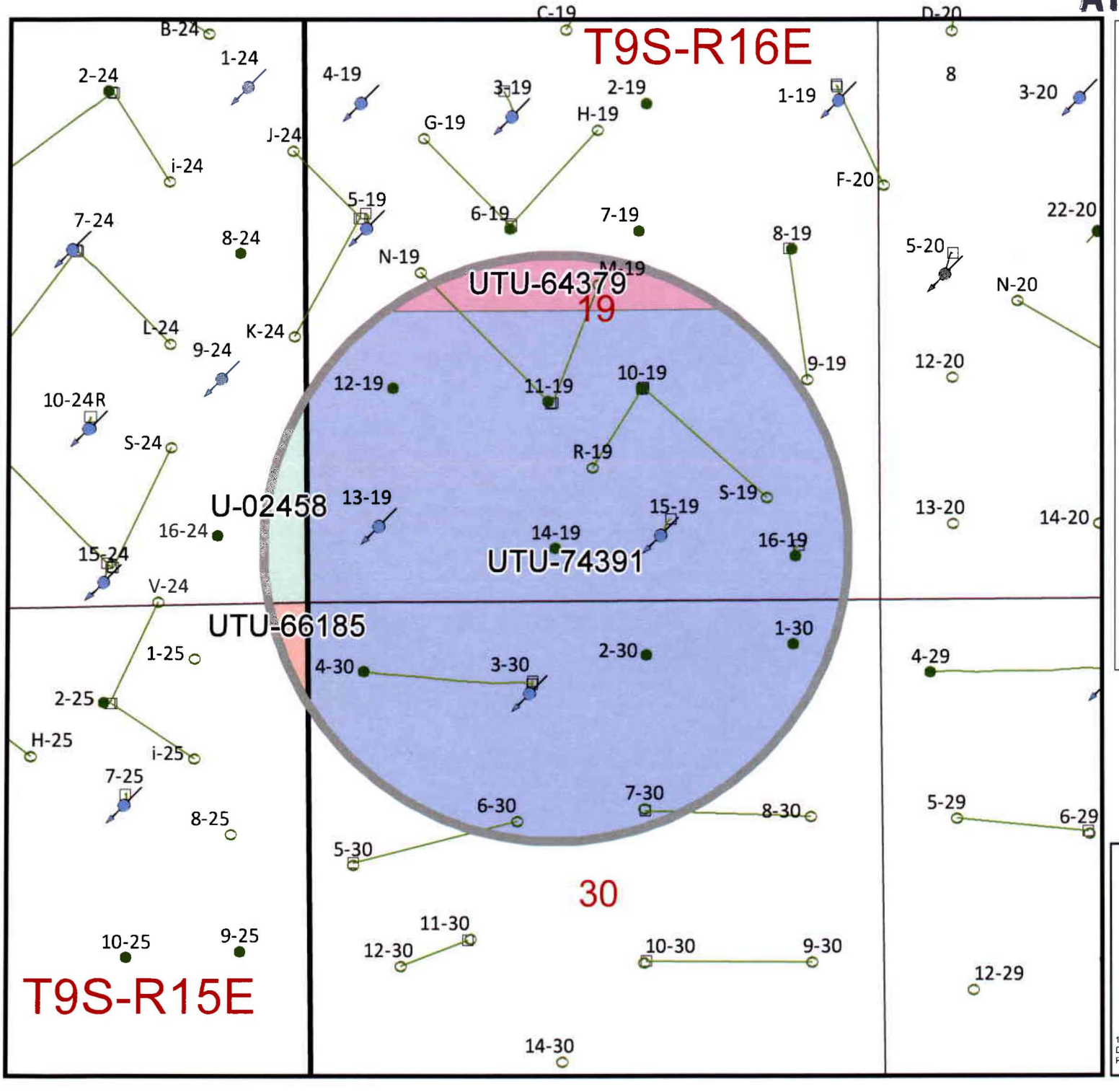

Lease Number

- U-02458
- UTU-64379
- UTU-66185
- UTU-74391

Half-Mile Buffer

Well Status

- Location
- CTI
- Surface Spud
- Drilling
- Waiting on Completion
- Producing Oil Well
- Producing Gas Well
- Water Injection Well
- Dry Hole
- Temporarily Abandoned
- Plugged & Abandoned
- Shut In
- Well Surface Location

FEDERAL 14-19-9-16
Section 19, T9S-R16E

NEWFIELD
ROCKY MOUNTAINS

N

1 in = 1,250 feet

1/2 Mile Radius Map

Duchesne County

1001 17th Street Suite 2000
Denver, Colorado 80202
Phone: (303) 893-0102

Nov. 7, 2013

ATTACHMENT A-1

T9S, R16E, S.L.B.&M.

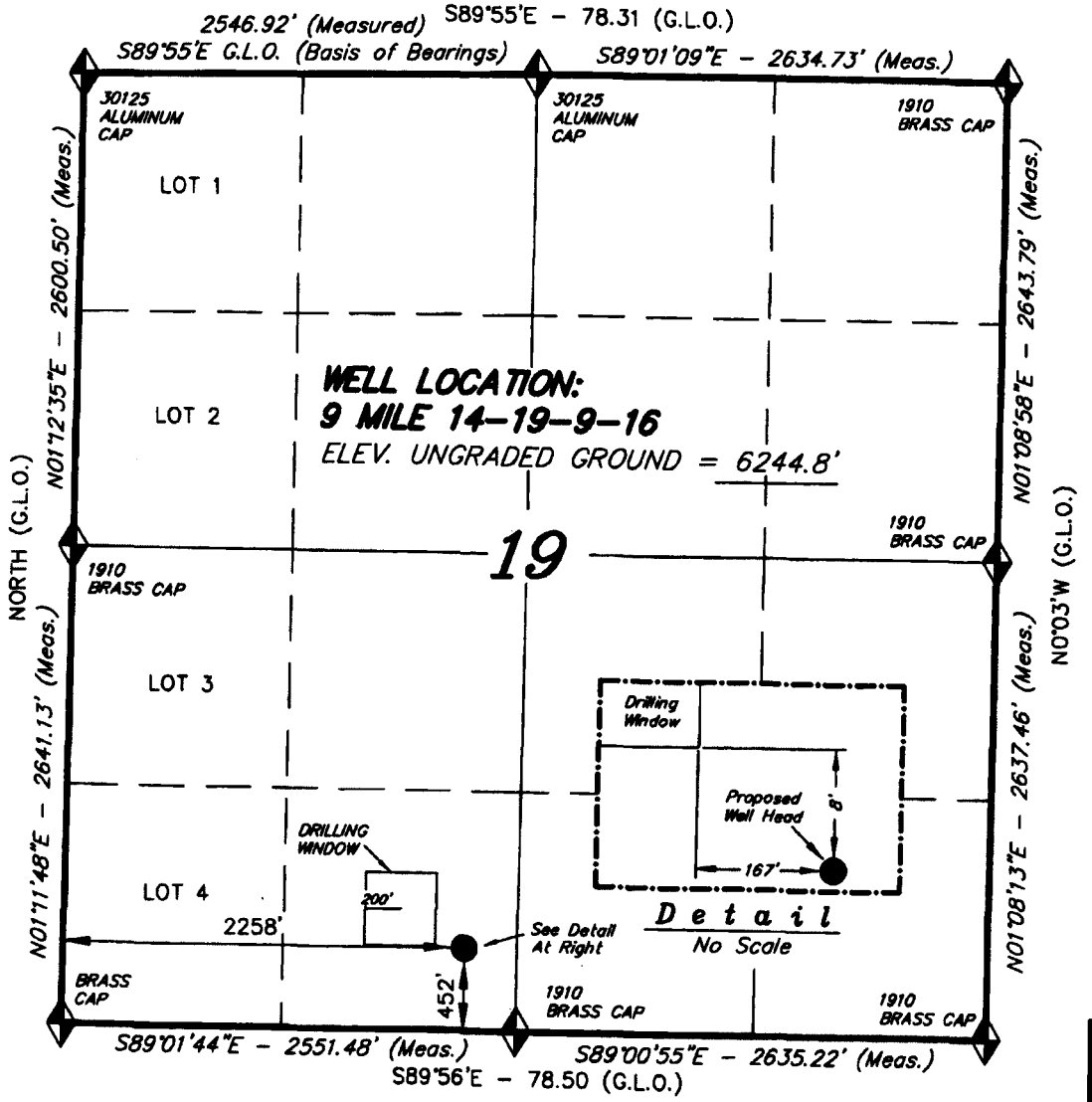

◆ = SECTION CORNERS LOCATED

BASIS OF ELEV;
U.S.G.S. 7-1/2 min QUAD (MYTON SW)

9 MILE 14-19-9-16
(Surface Location) NAD 83
LATITUDE = 40° 00' 37.44"
LONGITUDE = 110° 09' 47.26

NEWFIELD PRODUCTION COMPANY

WELL LOCATION, 9 MILE 14-19-9-16, LOCATED AS SHOWN IN THE SE 1/4 SW 1/4 OF SECTION 19, T9S, R16E, S.L.B.&M. DUCHESNE COUNTY, UTAH.

THIS IS TO CERTIFY THAT THE ABOVE PLAT WAS PREPARED FROM FIELD NOTES OF ACTUAL SURVEYS MADE BY ME OR UNDER MY SUPERVISION AND THAT THE SAME ARE TRUE AND CORRECT TO THE BEST OF MY KNOWLEDGE AND BELIEF.

STACY W. STEWART
REGISTERED LAND SURVEYOR
REGISTRATION No. 189377
STATE OF UTAH

REGISTERED LAND SURVEYOR No. 189377 STATE OF UTAH

TRI STATE LAND SURVEYING & CONSULTING
180 NORTH VERNAL AVE. - VERNAL, UTAH 84078
(435) 781-2501

DATE SURVEYED: 4-3-06	SURVEYED BY: C.M.
DATE DRAWN: 4-10-06	DRAWN BY: M.W.
REVISED:	SCALE: 1" = 1000'

EXHIBIT B

#	Legal Description	Lessor & Expiration	Lessee & Operating Rights	Surface Owner
1	T9S-R16E SLM	USA	Newfield Production Company	USA
	Section 19: E2SW, SE, LOTS 3, 4	UTU-74391	Newfield RMI LLC	
	Section 20: S2	HBP	ABO Petroleum Corp	
	Section 29: All		MYCO Industries Inc	
	Section 30: All		OXY Y-1 Company	
			Yates Petroleum Corp	
2	T9S-R16E SLM	USA	Newfield Production Company	USA
	Section 8: SWNE, SE	UTU-64379	Newfield RMI LLC	
	Section 9: SWSW	HBP	Yates Petroleum Corp	
	Section 17: NE			
	Section 18: E2SW, SE, LOTS 3,4			
	Section 19: NE, E2NW, LOTS 1,2			
	Section 21: N2			
	Section 22: W2NE, SENE, NW			
3	T9S-R15E SLM	USA	Newfield Production Company	USA
	Section 22: E2SW, LOTS 2, 3, 4	UTU-66185	Newfield RMI LLC	
	Section 23: NENE, W2E2, S2NW, E2SW	HBP		
	Section 24: N2N2			
	Section 25: All			
	Section 26: NE, NENW, S2NW, S2			
	Section 27: S2NE, E2NW, SE, LOTS 1, 2			
4	T9S-R15E SLM	USA	Newfield Production Company	USA
	Section 23: SENE, W2SW, NESE	UTU-002458	Newfield RMI LLC	
	Section 24: S2N2, S2	HBP		

ATTACHMENT C

CERTIFICATION FOR SURFACE OWNER NOTIFICATION

RE: Application for Approval of Class II Injection Well
Federal #14-19-9-16

I hereby certify that a copy of the injection application has been provided to all surface owners within a one-half mile radius of the proposed injection well.

Signed: _____
Newfield Production Company
Jill L Loyle
Regulatory Associate

Sworn to and subscribed before me this 5TH day of December, 2013.

Notary Public in and for the State of Colorado: _____

My Commission Expires: 12/31/15

LYDIA BIONDO
Notary Public
State of Colorado

ATTACHMENT E

FEDERAL 14-19-9-16

Spud Date: 01/23/07
Put on Production: 02/27/07
GL: 6245' KB: 6257'

Wellbore Diagram

Initial Production: BOPD, MCFD, BWPD

SURFACE CASING

CSG SIZE: 8-5/8"
GRADE: J-55
WEIGHT: 24#
LENGTH: 7 jts. (310.59')
DEPTH LANDED: 322.44' KB
HOLE SIZE:12-1/4"
CEMENT DATA: 160 sxs Class "G" cmt, est 2.25 bbls cmt to surf.

PRODUCTION CASING

CSG SIZE: 5-1/2"
GRADE: J-55
WEIGHT: 15.5#
LENGTH: 137 jts. (5979.73')
DEPTH LANDED: 5992.98' KB
HOLE SIZE: 7-7/8"
CEMENT DATA: 300 sxs Prem. Lite II mixed & 450 sxs 50/50 POZ.
CEMENT TOP: 136'

TUBING

SIZE/GRADE/WT.: 2-7/8" / J-55 / 6.5#
NO. OF JOINTS: 174 jts (5415.22')
TUBING ANCHOR: 5427.' KB
NO. OF JOINTS: 2 jts (60.30')
SEATING NIPPLE: 2-7/8" (1.10')
SN LANDED AT: 5490' KB
NO. OF JOINTS: 2 jts (60.4')
TOTAL STRING LENGTH: EOT @ 5552.' KB

SUCKER RODS

POLISHED ROD: 1-1/2" x 22' SM polished rods
SUCKER RODS: 1-2' & 1- 6,' x 3/4" pony rods, 99-3/4" 4 per guided rods, 103-3/4" sucker rods, 10-3/4" 4 per guided rods, 6-1 ½" x sinker bars, 1-1"x 4' pony rod, 1-3/4" x 8' pony rod
PUMP SIZE: CDI 2-1/2" x 1-1/2"x12' x 16' RHAC
STROKE LENGTH: 86"
PUMP SPEED, 4. SPM:

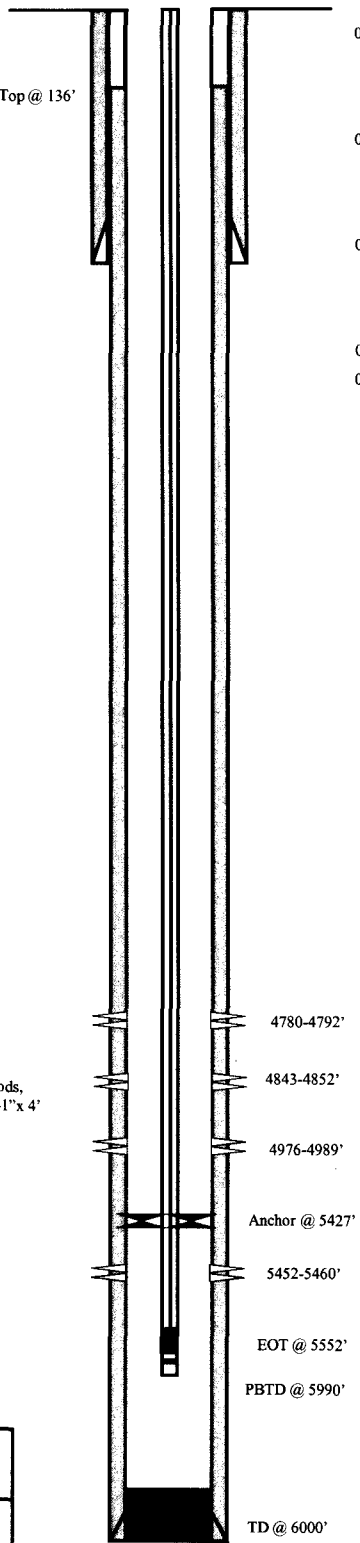

FRAC JOB

02/21/07	5452-5460'	**Frac CP1 sands as follows:** 34903# 20/40 sand in 471 bbls Lightning 17 frac fluid. Treated @ avg press of 2080 psi w/avg rate of 24.8 BPM. ISIP 1839 psi. Calc flush: 5450 gal. Actual flush: 4872 gal.
02/21/07	4976-4989'	**Frac A1 sands as follows:** 80502# 20/40 sand in 597 bbls Lightning 17 frac fluid. Treated @ avg press of 2245 psi w/avg rate of 24.6 BPM. ISIP 2369 psi. Calc flush: 4974 gal. Actual flush: 4536 gal.
02/22/07	4780-4852'	**Frac B1 & B2 sands as follows:** 159255# 20/40 sand in 1026 bbls Lightning17 frac fluid. Treated @ avg press of 1675 psi w/avg rate of 24.8 BPM. ISIP 1790 psi. Calc flush: 4778 gal. Actual flush: 4662 gal.
03-29-07	Pump Change	Rod & Tubing details updated.
01/28/11		Parted Rods. Rod & tubing updated.

PERFORATION RECORD

02/16/07	5452-5460'	4 JSPF	32 holes
02/21/07	4976-4989'	4 JSPF	52 holes
02/21/07	4843-4852'	4 JSPF	36 holes
02/21/07	4780-4792'	4 JSPF	48 holes

NEWFIELD

FEDERAL 14-19-9-16
452'FSL & 2258' FWL
SE/SW Section 19-T9S-R16E
Duchesne Co, Utah
API #43-013-33161; Lease # UTU-74391

TW 05/11/2011

ATTACHMENT E-1

Spud Date: 9/27/2007
Put on Production: 1/9/2008
GL:6181' KB:6193'

Federal 10-19-9-16

Initial Production: BOPD, MCFD, BWPD

Wellbore Diagram

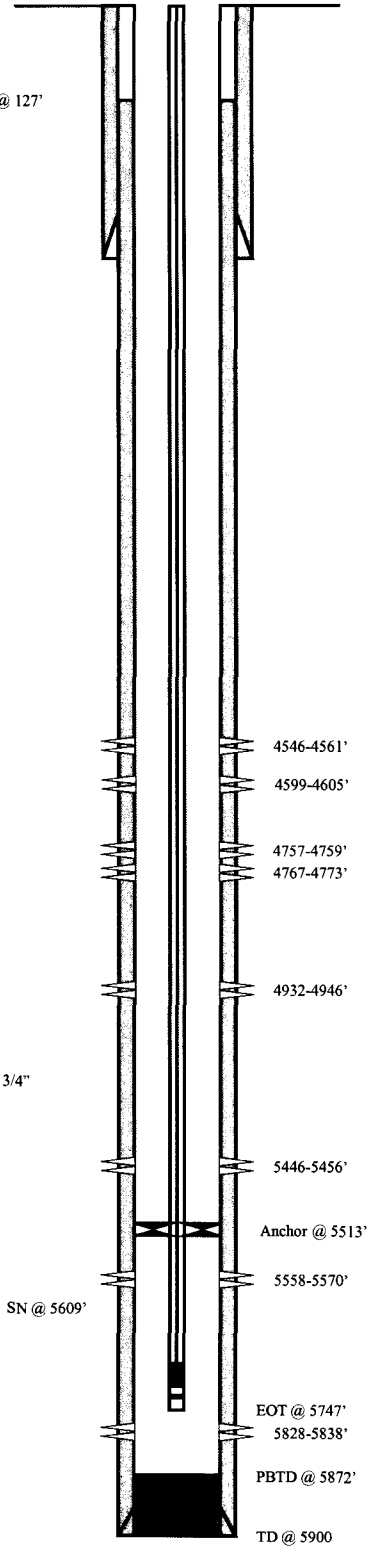

SURFACE CASING

CSG SIZE: 8-5/8"
GRADE: J-55
WEIGHT: 24#
LENGTH: 7jts (311.69')
DEPTH LANDED: 321.69'
HOLE SIZE: 12-¼'
CEMENT DATA: 160sxs of class 'G' cement, circ 2 bbls to surf

PRODUCTION CASING

CSG SIZE: 5-1/2"
GRADE: J-55
WEIGHT: 15.5#
LENGTH: 152jts (5894.79')
HOLE SIZE: 7-7/8"
DEPTH LANDED: 5883.99'
CEMENT DATA: 300sxs of Primlite II & 400sxs of 50/50 poz
CEMENT TOP AT: 127' per CBL 12/5/07

TUBING (KS 11/29/12)

SIZE/GRADE/WT.: 2-7/8" / J-55 / 6.5#
NO. OF JOINTS: 169jts (5501.0')
TUBING ANCHOR: 5513.0'
NO. OF JOINTS: 3jts (93.8')
SEATING NIPPLE: 2-7/8" (1.10')
SN LANDED AT: 5609.6'
NO. OF JOINTS: 1jt (32.7')
GAS ANCHOR: 5-1/2" (5.2')
NIPPLE: 2-7/8" (0.6')
NO. OF JOINTS: 3jts (97.6')
BULL PLUG: 2-7/8" (0.4')
TOTAL STRING LENGTH: EOT @ 5747'

SUCKER RODS (KS 11/29/12)

POLISHED ROD: 26' x 1-1/2"
SUCKER RODS: 4', 8' x ¾" Pony Rods, 99 x 3/4" Guided Rods, 91 x 3/4" Sucker Rods, 27 x 3/4" Guided Rods, 6 x 1-½" Sinker Bars
PUMP SIZE: 2-1/2" x 1-1/2" x 20' x 24' RHAC
STROKE LENGTH: 103"
PUMP SPEED, SPM: 5.0
PUMPING UNIT: DARCO C-320-256-120

FRAC JOB

12/14/07 5828'-5838'	**Frac BS sds** w/ 37,662#'s of 20/40 sand in 535 bbls of Lightning 17 fluid. Broke @ 3685 psi. Treated w/ ave pressure of 2385 psi w/ ave rate of 23.5 BPM. ISIP 2409 psi.Calc Flush: ? Actual flush: 5321 gals.
12/14/07 5558'-5570'	**Frac CP3 sds** w/ 39,505#'s of 20/40 sand in 465 bbls of Lightning 17 fluid. Broke @ 1750 psi. Treated w/ ave pressure of 2332 psi w/ ave rate of 20.6 BPM. ISIP 2282 psi.Calc flush: Actual Flush: 5048 gals.
12/14/07 5446'-5456'	**Frac CP1 sds** w/ 50,243#'s of 20/40 sand in 456 bbls of Lightning 17 fluid. Broke @ 1969 psi. Treated w/ ave pressure of 2121 psi w/ ave rate of 20.6 BPM. ISIP 2179 psi. Calc Flush:? Actual Flush: 4855 gals.
12/14/07 4546'-4561'	**Frac D1 & D2 sds** w/ 73,020#'s of 20/40 sand in 652 bbls of Lightning 17 fluid. Broke @ 1605 psi. Treated w/ ave pressure of 1792 psi w/ ave rate of 20.7 BPM. ISIP 2037 psi Calc flush: ? Actual Flush: 4460 gals.
10-1-08	Pump Change updated rod & tubing details.
10-01-10	Recompletion
9-28-10 4932-4561	Frac w/44516# of Frac A1 20/40 sand on 255bbls of lightning 17 fluid.
9-28-10 4767-4773	Frac w/50785# of Frac A1 20/40 sand on 287bbls of lightning 17 fluid

PERFORATION RECORD

12/06/07	5828-5838'	4 JSPF	40 holes
12/14/07	5558-5570'	4 JSPF	48 holes
12/14/07	5446-5456'	4 JSPF	40 holes
9/28/10	4932-4946'	4JSPF	42 holes
9/28/10	4767-4773'	4JSPF	18holes
9/28/10	4757-4759'	4JSPF	6 holes
12/14/07	4599-4605'	4 JSPF	24 holes
12/14/07	4546-4561'	4 JSPF	60 holes

NEWFIELD

Federal 10-19-9-16
1890' FSL & 2146' FEL
NW/SE Section 19-T9S-R16E
Duchesne Co, Utah
API #43-013-33159; Lease #UTU-74391

KS 1/30/13

ATTACHMENT E-2

Spud Date: 10-09-07

Put on Production: 1-8-08

GL: 6199' KB: 6211'

Federal 11-19-9-16

Injection Wellbore Diagram

SURFACE CASING

CSG SIZE: 8-5/8"

GRADE: J-55

WEIGHT: 24#

LENGTH: 7 jts. (310.34')

DEPTH LANDED: 320.34'

HOLE SIZE:12-1/4"

CEMENT DATA: 160 sxs Class "G" cmt, circ. 8 bbl to surf.

PRODUCTION CASING

CSG SIZE: 5-1/2"

GRADE: J-55

WEIGHT: 15.5#

LENGTH: 152jts. (5907.45')

HOLE SIZE: 7-7/8"

DEPTH LANDED: 5905.45'

CEMENT DATA: 300 sk Prem. Lite II mixed & 450 sxs 50/50 POZ.

CEMENT TOP AT: 224' per CBL 12/14/07

TUBING

SIZE/GRADE/WT.: 2-7/8" / J-55 / 6.5#

NO. OF JOINTS: 125 jts (3939.8')

SEATING NIPPLE: 2-7/8" (1.10')

SN LANDED AT: 3951.8' KB

ON/OFF TOOL AT: 3952.9'

ARROW #1 PACKER CE AT: 3957.69'

XO 2-3/8 x 2-7/8 J-55 AT: 3961.4'

TBG PUP 2-3/8 J-55 AT: 3961.9'

X/N NIPPLE AT: 3966'

TOTAL STRING LENGTH: EOT @ 3967.6'

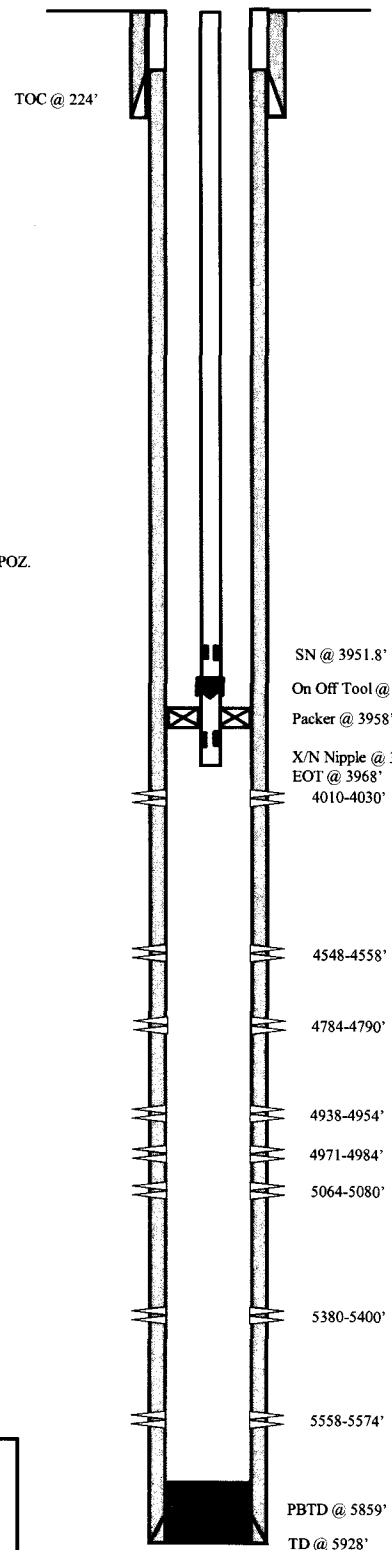

FRAC JOB

12-26-07	5558-5574'	**Frac CP2 sands as follows:** Frac with 59775# 20/40 sand in 533bbls Lightning 17 fluid. Treat at 1825 psi @ 23 BPM. ISIP 2111 psi.
12-26-07	5380-5400'	**Frac LODC sands as follows:** Frac with 59263# 20/40 sand in 528 bbls Lightning 17 fluid. Treat at 2001psi @ 23.1 BPM. ISIP 2364psi.
12-27-7	5064-5080'	**Frac LODC sands as follows:** Frac with 75331# 20/40 sand in 618 bbls Lightning 17 fluid. Treat at 2507 psi @ 29.1 BPM. ISIP 2905 psi.
12-27-07	4938-4984'	**Frac A3 &A1 sand as follows:** Frac with 110221# 20/40 sand in 881 bbls Lightning 17 fluid. Treat at 1743 psi @ 23 BPM. ISIP 2079 psi.
12-27-07	4784-4790'	**Frac B.5 sands as follows:** Frac with20091# 20/40 sand in 301 bbls Lightning 17 fluid. Treat at 2034 psi @ 23 BPM. ISIP 2027 psi.
12-27-07	4548-4558'	**Frac D1 sands as follows:** Frac with 50552# 20/40 sand in 442 bbls Lightning 17 fluid. Treat at 1639 psi @ 23.1 BPM. ISIP 2088 psi.
12-27-07	4010-4030'	**Frac GB4 sands as follows:** Frac with 44039# 20/40 sand in 416 bbls Lightning 17 fluid. Treat at 1391 psi @ 23 BPM. ISIP 1434 psi.
9-16-08		**Parted rod**. Updated rod & tubing details.
6/15/09		**Tubing Leak**. Updated r & t details.
09/04/13		**Convert to Injection Well**
09/05/13		**Conversion MIT Finalized** – update tbg detail

PERFORATION RECORD

4010-4030'	4 JSPF	80 holes
4548-4558'	4 JSPF	40 holes
4784-4790'	4 JSPF	24 holes
4938-4954'	4 JSPF	64 holes
4971-4984'	4 JSPF	52 holes
5064-5080'	4 JSPF	64 holes
5380-5400'	4 JSPF	80 holes
5558-5574'	4 JSPF	64 holes

NEWFIELD

Federal 11-19-9-16
1778' FSL & 2197' FWL
NESW Section 19-T9S-R16E
Duchesne Co, Utah
API #43-013-33160; Lease #UTU-74391

LCN 09/11/13

ATTACHMENT E-3

FEDERAL 12-19-9-16

Spud Date: 05/04/07
Put on Production: 03/28/07

GL: 6024' KB: 6036'

Wellbore Diagram

Initial Production: BOPD, MCFD, BWPD

SURFACE CASING

CSG SIZE: 8-5/8"
GRADE: J-55
WEIGHT: 24#
LENGTH: 7 jts. (312.23')
DEPTH LANDED: 324.08' KB
HOLE SIZE:12-1/4"
CEMENT DATA: 160 sxs Class "G" cmt, est 3 bbls cmt to surf.

PRODUCTION CASING

CSG SIZE: 5-1/2"
GRADE: J-55
WEIGHT: 15.5#
LENGTH: 131 jts. (5741.84')
DEPTH LANDED: 5744.09' KB
HOLE SIZE: 7-7/8"
CEMENT DATA: 325 sxs Prem. Lite II mixed & 451 sxs 50/50 POZ.

TUBING

SIZE/GRADE/WT.: 2-7/8" / J-55 / 6.5#
NO. OF JOINTS: 148 jts (4724.60')
TUBING ANCHOR: 4736.60' KB
NO. OF JOINTS: 1 jts (31.37')
SEATING NIPPLE: 2-7/8" (1.10')
SN LANDED AT: 4770.77' KB
NO. OF JOINTS: 2 jts (63.07')
TOTAL STRING LENGTH: EOT @ 4835.39' KB

SUCKER RODS

POLISHED ROD: 1-1/2" x 26' SM polished rods
SUCKER RODS:1-6' & 1- 8' x 3/4" pony rods, 99-3/4" guided rods, 75-3/4" plain rods, 10-3/4" guided rods, 6-1 ½" weight rods.
PUMP SIZE: CDI 2-1/2" x 1-1/2" x 20'RHAC
STROKE LENGTH: 102"
PUMP SPEED, 5 SPM:

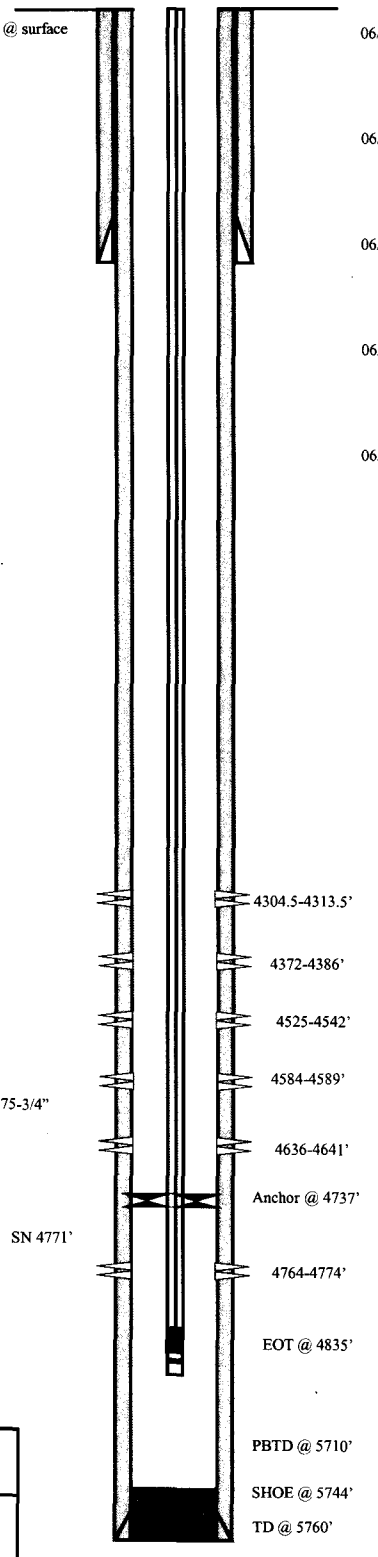

FRAC JOB

06/06/07 4764-4774' **Frac A1 sands as follows:** 49572# 20/40 sand in 420 bbls Lightning 17 frac fluid. Treated @ avg press of 2181 psi w/avg rate of 24.7 BPM. ISIP 2446 psi. Calc flush: 4762 gal. Actual flush: 4301 gal.

06/06/07 4636-4584' **Frac B2 & B1 sands as follows:** 14528# 20/40 sand in 232 bbls Lightning 17 frac fluid. Treated @ avg press of 2162 psi w/avg rate of 24.7 BPM. ISIP 1790 psi. Calc flush: 4634 gal. Actual flush: 4141 gal.

06/06/07 4525-4542' **Frac C sands as follows:** 99094# 20/40 sand in 695 bbls Lightning 17 frac fluid. Treated @ avg press of 2017 psi w/avg rate of 24.7 BPM. ISIP 2342 psi. Calc flush: 4523 gal. Actual flush: 4040 gal.

06/06/07 4372-4386' **Frac D1 sands as follows:** 93828# 20/40 sand in 683 bbls Lightning 17 frac fluid. Treated @ avg press of 1800 psi w/avg rate of 24.7 BPM. ISIP 2241 psi. Calc flush: 4370 gal. Actual flush: 3919 gal

06/06/07 4304.5-4313.5' **Frac DS3 sands as follows:** 17586# 20/40 sand in 243 bbls Lightning 17 frac fluid. Treated @ avg press of 2345 psi w/avg rate of 24.7 BPM. ISIP 2607 psi. Calc flush: 4302.5 gal. Actual flush: 4242 gal

PERFORATION RECORD

06/06/07	4764-4774'	4 JSPF	40 holes
06/06/07	4636-4641'	4 JSPF	20 holes
06/06/07	4584-4589'	4 JSPF	20 holes
06/06/07	4525-4542'	4 JSPF	68 holes
06/06/07	4372-4386'	4 JSPF	56 holes
06/06/07	4304.5-4313.5'	4 JSPF	36 holes

NEWFIELD

FEDERAL 12-19-9-16

1903'FSL & 791' FWL

NWSW Section 19-T9S-R16E

Duchesne Co, Utah

API #43-013-33102; Lease # UTU-74391

TW 04/18/07

ATTACHMENT E-4

Federal 13-19-9-16

Spud Date: 7/18/2009

Put on Production: 8/20/2009

GL: 6044' KB: 6056'

Injection Wellbore Diagram

SURFACE CASING

CSG SIZE: 8-5/8"

GRADE: J-55

WEIGHT: 24#

LENGTH: 7 jts. (30.7.17')

DEPTH LANDED: 319.02'

HOLE SIZE: 12-1/4"

CEMENT DATA: 160 sxs Class "G" cmt

PRODUCTION CASING

CSG SIZE: 5-1/2"

GRADE: J-55

WEIGHT: 15.5#

LENGTH: 143 jts. (5642.16')

HOLE SIZE: 7-7/8"

DEPTH LANDED: 5696.9'

CEMENT DATA: 275 sx Prem. Lite II mixed & 400 sx 50/50 POZ.

CEMENT TOP AT: 58'

TUBING

SIZE/GRADE/WT.: 2-7/8" / J-55 / 6.5#

NO. OF JOINTS: 120 jts (3772.8')

SEATING NIPPLE: 2-7/8" (1.10')

SN LANDED AT: 3784.8' KB

ON/OFF TOOL AT: 3785.9'

ARROW #1 PACKER CE AT: 3791.4'

XO 2-3/8 x 2-7/8 J-55 AT: 3794.8'

TBG PUP 2-3/8 J-55 AT: 3795.3'

X/N NIPPLE AT: 3799.6'

TOTAL STRING LENGTH: EOT @ 3800.9'

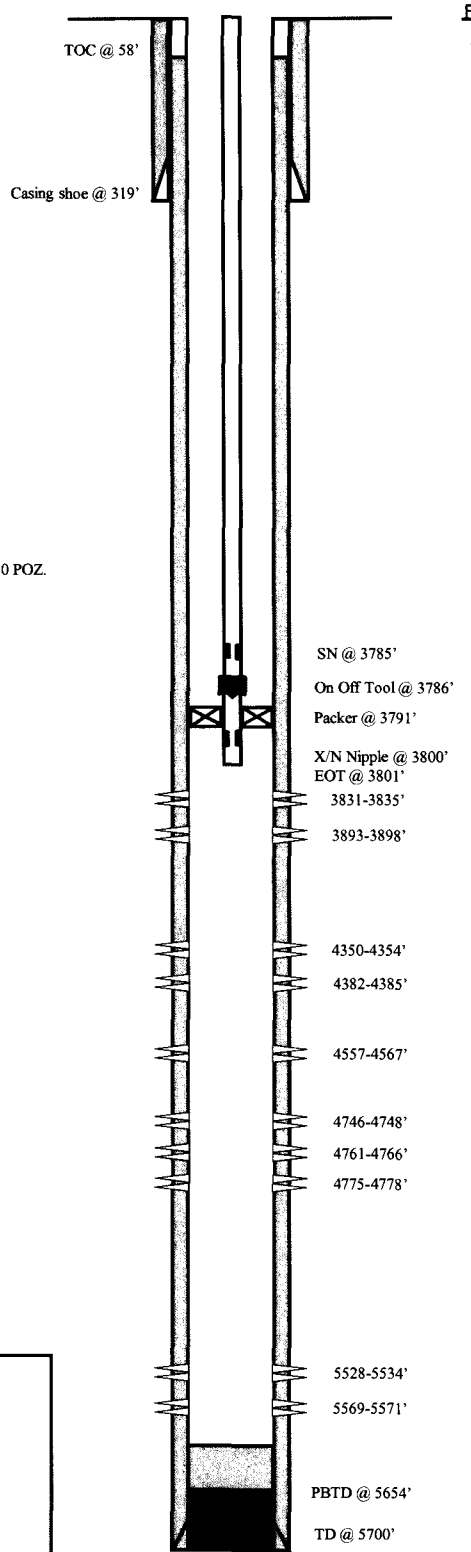

FRAC JOB

8-21-09	5528-5571'	**Frac CP5 sands as follows:** Frac with 15618# 20/40 sand in 124 bbls Lightning 17 fluid.
8-21-09	4746-4778'	**Frac A1 sands as follows:** Frac with 60817# 20/40 sand in 358 bbls Lightning 17 fluid.
8-21-09	4557-4567'	**Frac B.5 sands as follows:** Frac with 15408# 20/40 sand in 124 bbls Lightning 17 fluid.
8-21-09	4350-4385'	**Frac D1 & D2 sands as follows:** Frac with 61285# 20/40 sand in 360 bbls Lightning 17 fluid.
8-21-09	3831-3898'	**Frac GB4 & GB5 sands as follows:** Frac with 84734# 20/40 sand in 506 bbls Lightning 17 fluid.
9/30/09		**Pump Change**. Updated rod & tubing details.
11/30/2009		**Pump Change**. Updated rod and tubing detail.
05/01/10		**Pump Change**. Updated rod and tubing detail.
07/23/11		**Pump Change**. Rods & tubing updated.
09/04/13		**Convert to Injection Well**
09/05/13		**Conversion MIT Finalized** – update tbg detail

PERFORATION RECORD

5569-5571'	3 JSPF	6 holes
5528-5534'	3 JSPF	18 holes
4775-4778'	3 JSPF	9 holes
4761-4766'	3 JSPF	15 holes
4746-4748'	3 JSPF	6 holes
4557-4567'	3 JSPF	30 holes
4382-4385'	3 JSPF	9 holes
4350-4354'	3 JSPF	12 holes
3893-3898'	3 JSPF	15 holes
3831-3835'	3 JSPF	12 holes

NEWFIELD

Federal 13-19-9-16
588' FSL & 758' FWL SWSW
Section 19-T9S-R16E
Duchesne Co, Utah
API # 43-013-33103; Lease # UTU-74391

LCN 09/11/13

ATTACHMENT E-5

FEDERAL 15-19-9-16

Spud Date: 10/29/07

Put on Production: 02/07/08

GL:6218' KB:6230'

Injection Wellbore Diagram

SURFACE CASING

CSG SIZE: 8-5/8"

GRADE: J-55

WEIGHT: 24#

LENGTH: 7 jts. (312.36')

DEPTH LANDED: 324.84' KB

HOLE SIZE:12-1/4"

CEMENT DATA:1- 160, sxs Class "G" cmt, est 5 bbls cmt to surf.

PRODUCTION CASING

CSG SIZE: 5-1/2"

GRADE: J-55

WEIGHT: 15.5#

LENGTH: 136 jts. (5854.09')

DEPTH LANDED: 5867.67' KB

HOLE SIZE: 7-7/8"

CEMENT DATA: 325 sxs Prem. Lite II mixed & 400 sxs 50/50 POZ.

TUBING

SIZE/GRADE/WT.: 2-7/8" / J-55 / 6.5#

NO. OF JOINTS: 142 jts (4459.0')

SEATING NIPPLE: 2-7/8" (1.10')

SN LANDED AT: 4480.8' KB

CE @ 4475.61'

TOTAL STRING LENGTH: EOT @ 4482.' KB

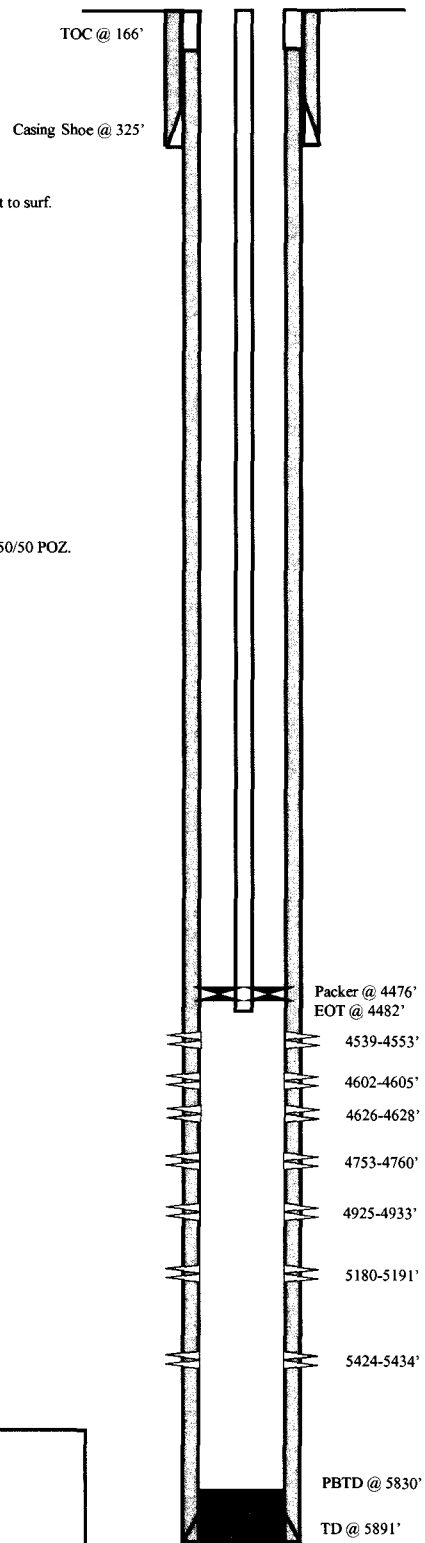

FRAC JOB

02/01/08	5424-5434'	**Frac CP1 sands as follows:** 19731# 20/40 sand in 327 bbls Lightning 17 frac fluid. Treated @ avg press of 1909 psi w/avg rate of 15.2 BPM. ISIP 2009 psi.
02/01/08	5180-5191'	**Frac LODC sands as follows:** 29863# 20/40 sand in 404 bbl Lightning 17 frac fluid. Treated @ avg press of 2361 psi w/avg rate of 22.1 BPM. ISIP 2460 psi.
02/01/08	4925-4933'	**Frac A1 sands as follows:** 15194# 20/40 sand in 274 bbls Lightning 17 frac fluid. Treated @ avg press of 2440 psi w/avg rate of 21.6 BPM. ISIP 2237 psi.
02/01/08	4753-4760'	**Frac B.5 sands as follows:** 25716# 20/40 sand in 345 bbls Lightning 17 frac fluid. Treated @ avg press of 2072 psi w/avg rate of 22.0 BPM. ISIP 2020 psi.
02/01/08	4539-4553'	**Frac D1 sands as follows:** 46601# 20/40 sand in 439 bbls Lightning 17 frac fluid. Treated @ avg press of 1712 psi w/avg rate of 22.0 BPM. ISIP 1930 psi.
10/2/09		**Tubing Leak.** Updated rod &tubing detials.
06/28/11		**Parted Rods.** Rods & tubing updated.
05/29/12	4602-4626'	**Frac D3 & D2 sands as follows:** 18461# 20/40 sand in 292 bbls Lightning 17 frac fluid
05/30/12		**Convert to Injection Well**
06/01/12		**Conversion MIT Finalized** – update tbg detail

PERFORATION RECORD

	5424-5434'	4 JSPF	40 holes
	5180-5191'	4 JSPF	44 holes
	4925-4933'	4 JSPF	32 holes
	4753-4760'	4 JSPF	28 holes
	4539-4553'	4 JSPF	56 holes
5-29-12	4626-4628'	3 JSPF	6 holes
5-29-12	4602-4605'	3 JSPF	9 holes

NEWFIELD

FEDERAL 15-19-9-16

711' FSL & 1888' FEL

SW/SE Section 19-T9S-R16E

Duchesne Co, Utah

API #43-013-33162; Lease # UTU-74391

LCN 06/05/12

ATTACHMENT E-6

FEDERAL 16-19-9-16

Spud Date: 10/31/07
Put on Production: 02/19/08
GL: 6180' KB: 6192'

Wellbore Diagram

SURFACE CASING

CSG SIZE: 8-5/8"
GRADE: J-55
WEIGHT: 24#
LENGTH: 7 jts. (312.36')
DEPTH LANDED: 324.64' KB
HOLE SIZE:12-1/4"
CEMENT DATA:1- 160, sxs Class "G" cmt, est 3 bbls cmt to surf.

PRODUCTION CASING

CSG SIZE: 5-1/2"
GRADE: J-55
WEIGHT: 15.5#
LENGTH: 136 jts. (5805.80')
DEPTH LANDED: 5819.05' KB
HOLE SIZE: 7-7/8"
CEMENT DATA: 300 sxs Prem. Lite II mixed & 400 sxs 50/50 POZ.
CEMENT TOP: 114'

TUBING

SIZE/GRADE/WT.: 2-7/8" / J-55 / 6.5#
NO. OF JOINTS: 164 jts (5253.1')
TUBING ANCHOR: 5265.1' KB
NO. OF JOINTS: 1jts (31.3')
SEATING NIPPLE: 2-7/8" (1.10')
SN LANDED AT: 5299.2' KB
NO. OF JOINTS: 2 jts (62.9')
TOTAL STRING LENGTH: EOT @ 5364' KB

SUCKER RODS

POLISHED ROD: 1 ½" x 26'
SUCKER RODS: 1-2', 1-4', 1-8' x 7/8" pony rods, 81- 7/8" guided rods, 119- ¾" guided rods, 6- 1 ½" weight bars, 1-1" x 4' stabilizer bar
PUMP SIZE: 2 ½" x 1 ¾" x 16' x 20' RHAC pump
STROKE LENGTH: 122
PIMP SPEED, SPM: 5 SPM

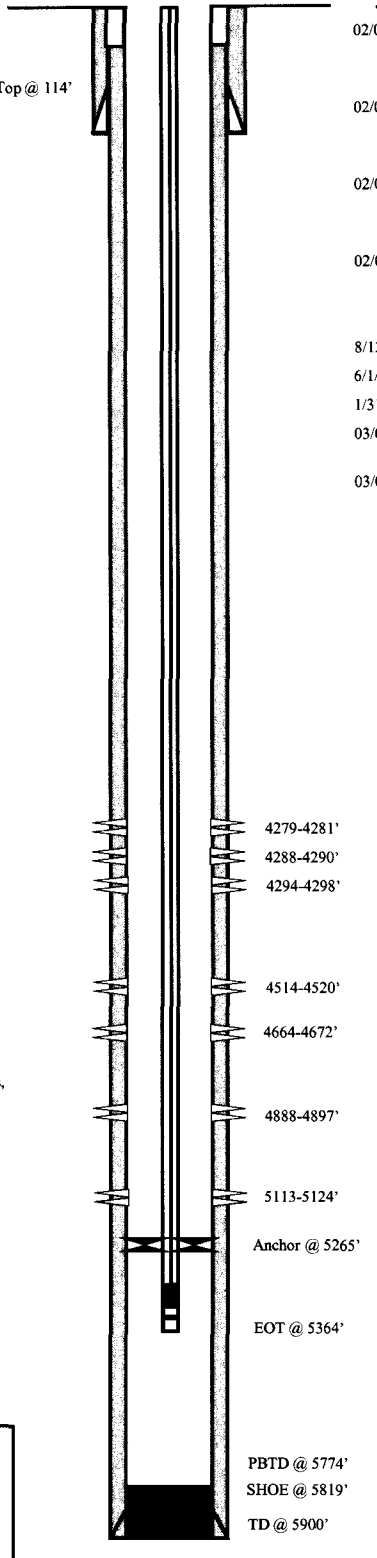

FRAC JOB

02/08/08	5113-5124'	**Frac LODC sands as follows:** 50640# 20/40 sand in 476 bbls Lightning 17 frac fluid. Treated @ avg press of 2517 psi w/avg rate of 22 BPM. ISIP 2765 psi.
02/08/008	4888-4897'	**Frac A1 sands as follows:** 30199# 20/40 sand in 394 bbl Lightning 17 frac fluid. Treated @ avg press of 2251 psi w/avg rate of 19.2 BPM. ISIP 2240 psi.
02/08/08	4664-4672'	**Frac C sands as follows:** 34297# 20/40 sand in 404 bbls Lightning 17 frac fluid. Treated @ avg press of 2310 psi w/avg rate of 27.6 BPM. ISIP 1950 psi.
02/09/08	4514-4520'	**Frac D1 sands as follows:** 28511# 20/40 sand in 381 bbls Lightning 17 frac fluid. Treated @ avg press of 2109 psi w/avg rate of 27.2 BPM. ISIP 1930 psi.
8/12/08		**Pump Change.** Updated rod & tubing details.
6/1/09		**Tubing Leak.** Updated r & t details.
1/31/11		**Tubing Leak.** Update rod and tubing details.
03/02/11	4279-4298'	**Frac PB11 sands as follows:** 61895# 20/40 sand in 365 bbls Lightning 17 fluid.
03/04/11		**Recompletion Finalized** – update rod & tbg detail.

PERFORATION RECORD

	5113-5124'	4 JSPF	24 holes
	4888-4897'	4 JSPF	36 holes
	4664-4672'	4 JSPF	32 holes
	4514-4520'	4 JSPF	24 holes
03/02/11	4279-4281'	3 JSPF	6 holes
03/02/11	4288.4290'	3 JSPF	6 holes
03/02/11	4294-4298'	3 JSPF	12 holes

NEWFIELD

FEDERAL 16-19-9-16

467' FSL & 733' FEL

SE/SE Section 19-T9S-R16E

Duchesne Co, Utah

API #43-013-33163; Lease # UTU-74391

LCN 03-15-11

 Attachment E-7

Federal 1-30-9-16

Spud Date: 5/28/2009
Put on Production: 7/6/2009
GL: 6214' KB: 6226'

Injection Wellbore Diagram

SURFACE CASING

CSG SIZE: 8-5/8"
GRADE: J-55
WEIGHT: 24#
LENGTH: 7 jts (269')
DEPTH LANDED: 320' KB
HOLE SIZE: 12-1/4"
CEMENT DATA: 160 sx class 'g' cmt

PRODUCTION CASING

CSG SIZE: 5-1/2"
GRADE: J-55
WEIGHT: 15.5#
LENGTH: 140 jts (5791')
HOLE SIZE: 7-7/8"
DEPTH LANDED: 5843.37'
CEMENT DATA: 275 sx Prem Lite and 400 sx 50/50 poz
CEMENT TOP AT: 72'

TUBING

SIZE/GRADE/WT.: 2-7/8" / J-55 / 6.5#
NO. OF JOINTS: 144 jts (4464.8')
SEATING NIPPLE: 2-7/8" (1.10')
SN LANDED AT: 4476.8' KB
ON/OFF TOOL AT: 4477.9'
ARROW #1 PACKER CE AT: 4483.1'
XO 2-3/8 x 2-7/8 J-55 AT: 4487.3'
TBG PUP 2-3/8 J-55 AT: 4487.7'
X/N NIPPLE AT: 4491.9'
TOTAL STRING LENGTH: EOT @ 4493.4'

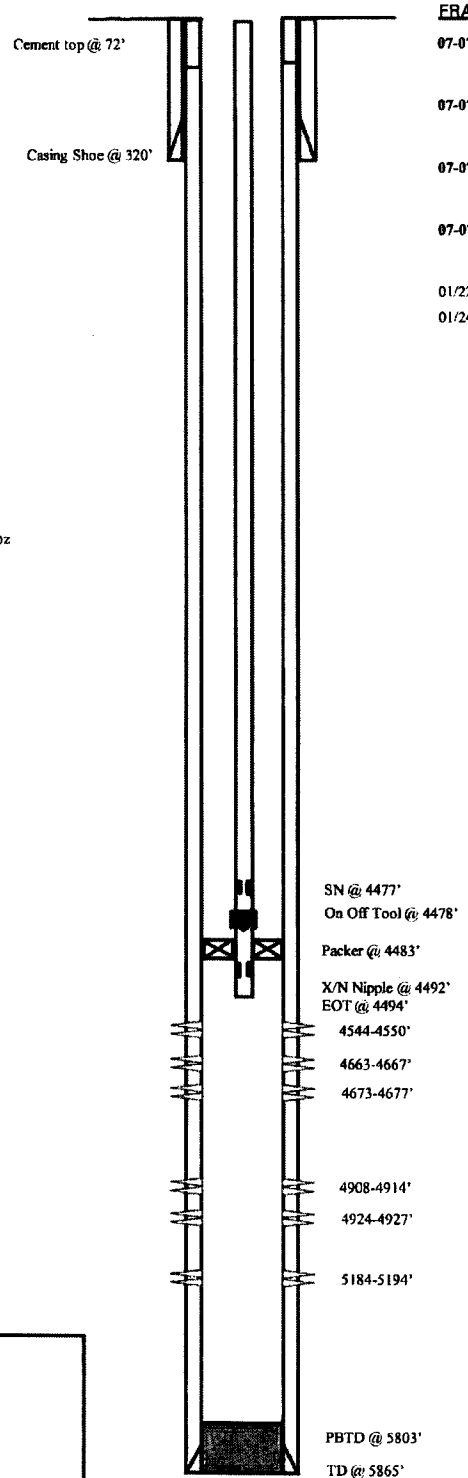

FRAC JOB

07-07-09	5184-5194'	**Frac LODC sands as follows:** Frac with 45269#' 20/40 sand in 289 bbls of Lightning 17 fluid.
07-07-09	4908-4927'	**Frac A1 sands as follows:** Frac with 100700# 20/40 sand in 596 bbls of Lightning 17 fluid.
07-07-09	4663-4677'	**Frac C sands as follows:** Frac with 55268# 20/40 sand in 343 bbls of Lightning 17 fluid.
07-07-09	4544-4550'	**Frac D1 sands as follows:** 14925# 20/40 sand in 244 total bbls of fluid inc Lightning 17 fluid.
01/22/14		**Convert to Injection Well**
01/24/14		**Conversion MIT Finalized** – update tbg detail

PERFORATION RECORD

5184-5194'	3 JSPF	30 holes
4924-4927'	3 JSPF	9 holes
4908-4914'	3 JSPF	18 holes
4673-4677'	3 JSPF	12 holes
4663-4667'	3 JSPF	12 holes
4544-4550'	3 JSPF	18 holes

NEWFIELD

Federal 1-30-9-16
419' FNL & 785' FEL
NE/NE Section 30-T9S-R16E
Duchesne Co. Utah
API # 43-013-33452; Lease # UTU-74391

LCN 01/27/14

ATTACHMENT E-8

Federal 2-30-9-16

Spud Date: 6/8/2009
Put on Production: 7/10/2009
GL: 6238' KB: 6250'

Wellbore Diagram

SURFACE CASING

CSG SIZE: 8-5/8"
GRADE: J-55
WEIGHT: 24#
LENGTH: 7 jts (269')
DEPTH LANDED: 317' KB
HOLE SIZE: 12-1/4"
CEMENT DATA: 160 sx class 'G' cmt

PRODUCTION CASING

CSG SIZE: 5-1/2"
GRADE: J-55
WEIGHT: 15.5#
LENGTH: 148 jts (5812')
DEPTH LANDED: 5862'
HOLE SIZE: 7-7/8"
CEMENT DATA: 275 sx Prem. Lite and 400 sx 50/50 poz
CEMENT TOP AT: 54'

TUBING

SIZE/GRADE/WT.: 2-7/8" / J-55 / 6.5 #
NO. OF JOINTS: 174 jts (5477')
TUBING ANCHOR: 5489' KB
NO. OF JOINTS: 1 jt (31.5')
SEATING NIPPLE: 2-7/8" (1.1')
SN LANDED AT: 5524' KB
NO. OF JOINTS: 2 jts (63.3')
TOTAL STRING LENGTH: EOT @ 5589'

SUCKER RODS

POLISHED ROD: 1 ½" x 26' polished rod
SUCKER RODS: 1 – 2' x ¾", 1 – 4' x ¾", 1 – 6' x ¾" pony rods, 100- ¾" guided rods, 94 - ¾" sucker rods, 2- ¾" guided rods, 6 - 1 ½" weight rods
PUMP SIZE: 2 ½" x 1 ½" x 20' RHAC
STROKE LENGTH: 86
PUMP SPEED - SPM: 5

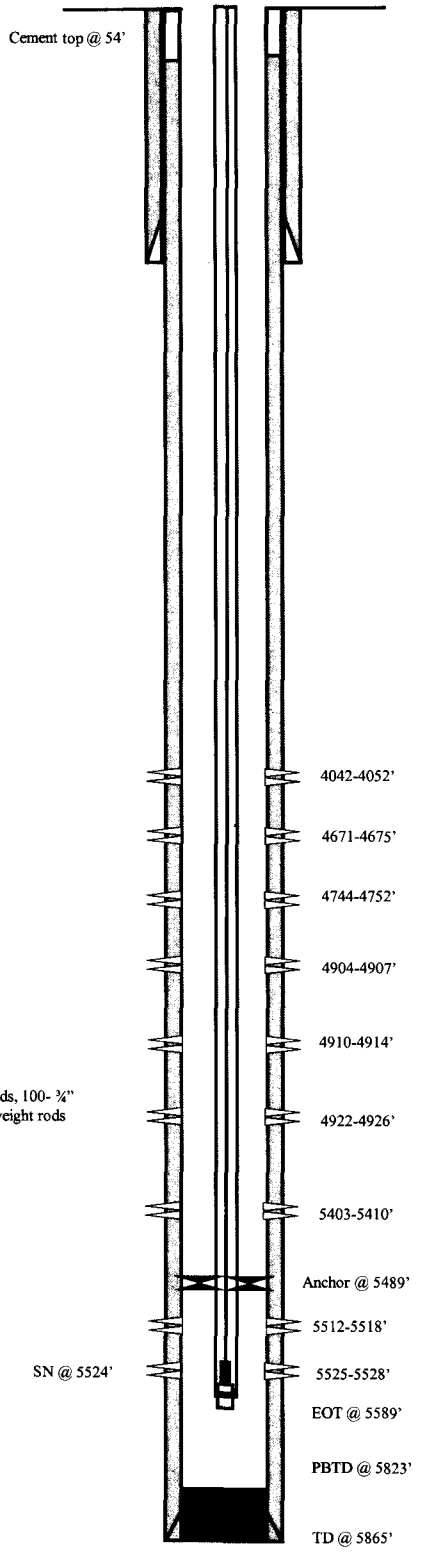

FRAC JOB

7/10/2009	5512-5528'	**Frac CP3 sands as follows:** 14,703#'s of 20/40 sand in 130 bbls of Lightning 17 fluid.
7/10/2009	5403-5410'	**Frac CP1 sands as follows:** 20,309#'s of 20/40 sand in 169 bbls of Lightning 17 fluid.
7/10/2009	4904-4926'	**Frac A1 sands as follows:** 25,710#'s of 20/40 sand in 209 bbls of Lightning 17 fluid.
7/10/2009	4671-4752'	**Frac B.5 & C sands as follows:** 125,658#'s of 20/40 sand in 758 bbls of Lightning 17 fluid.
7/10/2009	4042-4052'	**Frac GB6 sands as follows:** 106,827#'s of 20/40 sand in 651 bbls of Lightning 17 fluid.

PERFORATION RECORD

5525-5528'	3 JSPF	9 holes
5512-5518'	3 JSPF	18 holes
5403-5410'	3 JSPF	21 holes
4922-4926'	3 JSPF	12 holes
4910-4914'	3 JSPF	12 holes
4904-4907'	3 JSPF	9 holes
4744-4752'	3 JSPF	24 holes
4671-4675'	3 JSPF	12 holes
4042-4052'	3 JSPF	30 holes

NEWFIELD

Federal 2-30-9-16
517' FNL & 2110' FEL NW/NE
Section 30-T9S-R16E
Duchesne Co, Utah
API # 43-013-33453; Lease # UTU-74391

LCN 09-14-09

ATTACHMENT E-9

Federal 3-30-9-16

Spud Date: 5/16/2009

Put on Production: 7/1/2009

GL: 6067' KB: 6079'

Injection Wellbore Diagram

SURFACE CASING

CSG SIZE: 8-5/8"

GRADE: J-55

WEIGHT: 24#

LENGTH: 7 jts (277')

DEPTH LANDED: 328' KB

HOLE SIZE: 12-1/4"

CEMENT DATA: 160 sx class 'G' cmt

PRODUCTION CASING

CSG SIZE: 5-1/2"

GRADE: J-55

WEIGHT: 15.5#

LENGTH: 152 jts (5704 ')

DEPTH LANDED: 5704'

HOLE SIZE: 7-7/8"

CEMENT DATA: 280 sx Prem. Lite and 400 sx 50/50 poz

CEMENT TOP AT: 54'

TUBING

SIZE/GRADE/WT.: 2-7/8" / J-55 / 6.5#

NO. OF JOINTS: 124 jts (3813.4')

SEATING NIPPLE: 2-7/8" (1.10')

SN LANDED AT: 3825.4' KB

ON/OFF TOOL AT: 3826.5'

ARROW #1 PACKER CE AT: 3832'

XO 2-3/8 x 2-7/8 J-55 AT: 3835.8'

TBG PUP 2-3/8 J-55 AT: 3836.4'

X/N NIPPLE AT: 3840.5'

TOTAL STRING LENGTH: EOT @ 3841.62'

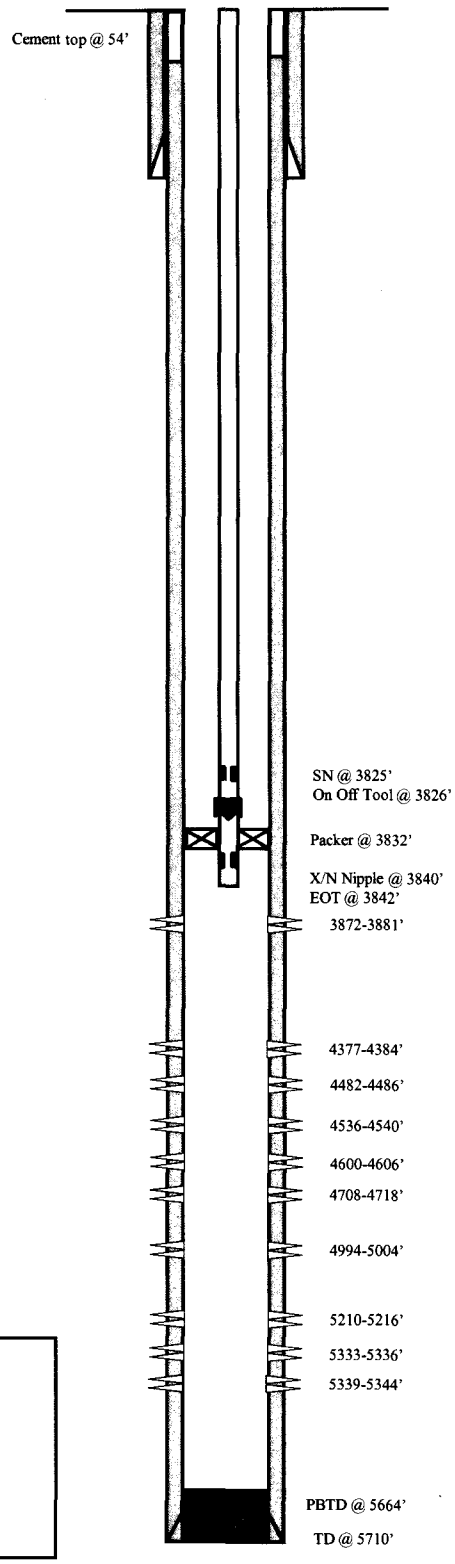

FRAC JOB

7/2/2009	**5333-5344' Frac CP3 sands as follows:**	15,090#'s of 20/40 sand in 125 bbls of Lightning 17 fluid.
7/2/2009	**5210-5216' Frac CP1 sands as follows:**	15,050#'s of 20/40 sand in 122 bbls of Lightning 17 fluid.
7/2/2009	**4994-5004' Frac LODC sands as follows:**	40,814#'s of 20/40 sand in 263 bbls of Lightning 17 fluid.
7/2/2009	**4708-4718' Frac A1 sands as follows:**	55,392#'s of 20/40 sand in 348 bbls of Lightning 17 fluid.
7/2/2009	**4482-4606'**	**Frac B2/B.5/C sands as follows:** 127,786#'s of 20/40 sand in 765 bbls of Lightning 17 fluid.
1/28/2012		**Parted rods:** Updated tubing & rod detail
09/27/13	4377-4384'	**Frac D2 sands as follows:** 10070#'s of 20/40 sand in 188 bbls of Lightning 17 fluid.
09/27/13	3872-3881'	**Frac GB sands as follows:** 18700#'s of 20/40 sand in 222 bbls of Lightning 17 fluid.
09/30/13		**Convert to Injection Well**
10/01/13		**Conversion MIT Finalized** – update tbg detail

PERFORATION RECORD

5339-5344'	3 JSPF	15 holes
5333-5336'	3 JSPF	9 holes
5210-5216'	3 JSPF	18 holes
4994-5004'	3 JSPF	30 holes
4708-4718'	3 JSPF	30 holes
4600-4606'	3 JSPF	18 holes
4536-4540'	3 JSPF	12 holes
4482-4486'	3 JSPF	12 holes
4377-4384'	3 JSPF	21 holes
3872-3881'	3 JSPF	27 holes

NEWFIELD

Federal 3-30-9-16

749' FNL & 2042' FWL NE/NW

Section 30-T9S-R16E

Duchesne Co, Utah

API # 43-013-33454; Lease # UTU-74391

LCN 10/10/13

ATTACHMENT E-10

Federal 4-30-9-16

Spud Date: 8-15-10
Put on Production:9-23-10

GL:6068 ' KB:6080 '

SURFACE CASING

CSG SIZE: 8-5/8"
GRADE: J-55
WEIGHT: 24#
LENGTH: 8 jts. (335.81')
DEPTH LANDED: 349.66'
HOLE SIZE: 12-1/4"
CEMENT DATA: 180 sxs Class "G" cmt

PRODUCTION CASING

CSG SIZE: 5-1/2"
GRADE: J-55
WEIGHT: 15.5#
LENGTH: 141 jts. (5942.38')
HOLE SIZE: 7-7/8"
DEPTH LANDED: 5958.38'
CEMENT DATA: 250 sxs Prem. Lite II mixed & 400 sxs 50/50 POZ.
CEMENT TOP AT: 92'

TUBING

SIZE/GRADE/WT.: 2-7/8" / J-55 / 6.5#
NO. OF JOINTS: 165jts 5154.4')
TUBING ANCHOR: 5167.4'
NO. OF JOINTS: 1 jts (31.4')
SEATING NIPPLE: 2-7/8" (1.1')
SN LANDED AT: 6738.3' KB
NO. OF JOINTS: 2jts (62.8')
TOTAL STRING LENGTH: EOT @5266 '

SUCKER RODS

POLISHED ROD: 1-1/2" x 30'
SUCKER RODS: 202-4 per guided rods, 4- 1 ½" weight bars
PUMP SIZE: 2 ½ x 1 3/4' x 24' RHAC
STROKE LENGTH:144
PUMP SPEED: SPM 5

Wellbore Diagram

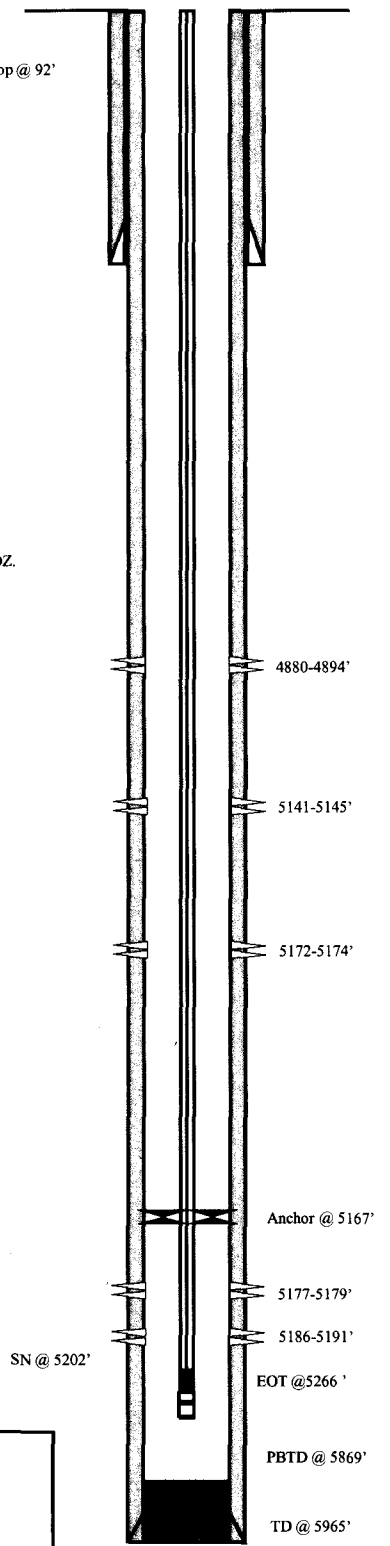

FRAC JOB

9-14-10 5141-5191' **Frac LODC sands as follows:**Frac with 46141# 20/40 sand in 292 bbls lightning17 fluid.

9-18-10 4880-4894' **Frac A1 sands as follows:**Frac with 63340# 20/40 sand in 420 bbls Lightning 17 fluid.

PERFORATION RECORD

5186-5191'	3 JSPF	15 holes
5177-5179'	3 JSPF	6 holes
5172-5174'	3 JSPF	6holes
5141-5145'	3 JSPF	12 holes
4880-4894'	3 JSPF	42 holes

NEWFIELD

Federal 4-30-9-16
769'FNL & 2034'FWL (NE/NW)
Section 30, T9S, R16
Duchesne Co, Utah
API # 43-013-33470; Lease # UTU-74391

MB-10-6-10

ATTACHMENT F 1of6

multi-chem
A HALLIBURTON SERVICE

Multi-Chem Analytical Laboratory
1553 East Highway 40
Vernal, UT 84078

Units of Measurement: **Standard**

Water Analysis Report

Production Company: **NEWFIELD PRODUCTION**
Well Name: **FEDERAL 14-19-9-16**
Sample Point: **Treater**
Sample Date: **7/17/2013**
Sample ID: **WA-248304**

Sales Rep: **Michael McBride**
Lab Tech: **Gary Winegar**

Scaling potential predicted using ScaleSoftPitzer from Brine Chemistry Consortium (Rice University)

Sample Specifics	
Test Date:	7/24/2013
System Temperature 1 (°F):	120
System Pressure 1 (psig):	60
System Temperature 2 (°F):	210
System Pressure 2 (psig):	60
Calculated Density (g/ml):	1.015
pH:	7.90
Calculated TDS (mg/L):	26314.41
CO2 in Gas (%):	
Dissolved CO_2 (mg/L)):	0.00
H_2S in Gas (%):	
H2S in Water (mg/L):	5.00

Analysis @ Properties in Sample Specifics			
Cations	*mg/L*	*Anions*	*mg/L*
Sodium (Na):	10049.31	Chloride (Cl):	15000.00
Potassium (K):	47.00	Sulfate (SO_4):	26.00
Magnesium (Mg):	3.00	Bicarbonate (HCO_3):	1098.00
Calcium (Ca):	8.00	Carbonate (CO_3):	
Strontium (Sr):	4.00	Acetic Acid (CH_3COO)	
Barium (Ba):	5.00	Propionic Acid (C_2H_5COO)	
Iron (Fe):	69.00	Butanoic Acid (C_3H_7COO)	
Zinc (Zn):	0.07	Isobutyric Acid ($(CH_3)_2CHCOO$)	
Lead (Pb):	0.05	Fluoride (F):	
Ammonia NH_3:		Bromine (Br):	
Manganese (Mn):	0.70	Silica (SiO_2):	4.28

Notes:
B=5

(PTB = Pounds per Thousand Barrels)

		Calcium Carbonate		Barium Sulfate		Iron Sulfide		Iron Carbonate		Gypsum CaSO4·2H2O		Celestite SrSO4		Halite NaCl		Zinc Sulfide	
Temp (°F)	PSI	SI	PTB	SI	PTB	SI	PTB	SI	PTB	SI	PTB	SI	PTB	SI	PTB	SI	PTB
210.00	60.00	0.44	4.08	0.00	0.00	3.76	4.54	3.32	50.09	0.00	0.00	0.00	0.00	0.00	0.00	7.48	0.04
200.00	60.00	0.38	3.70	0.00	0.00	3.74	4.54	3.27	50.08	0.00	0.00	0.00	0.00	0.00	0.00	7.55	0.04
190.00	60.00	0.33	3.29	0.00	0.00	3.73	4.54	3.22	50.06	0.00	0.00	0.00	0.00	0.00	0.00	7.64	0.04
180.00	60.00	0.27	2.85	0.00	0.00	3.72	4.54	3.17	50.04	0.00	0.00	0.00	0.00	0.00	0.00	7.73	0.04
170.00	60.00	0.22	2.39	0.00	0.00	3.71	4.54	3.11	50.01	0.00	0.00	0.00	0.00	0.00	0.00	7.83	0.04
160.00	60.00	0.17	1.90	0.00	0.00	3.71	4.54	3.06	49.98	0.00	0.00	0.00	0.00	0.00	0.00	7.93	0.04
150.00	60.00	0.12	1.41	0.00	0.00	3.72	4.54	3.00	49.95	0.00	0.00	0.00	0.00	0.00	0.00	8.04	0.04
140.00	60.00	0.08	0.90	0.00	0.00	3.73	4.54	2.94	49.90	0.00	0.00	0.00	0.00	0.00	0.00	8.16	0.04
130.00	60.00	0.03	0.39	0.02	0.09	3.75	4.54	2.88	49.85	0.00	0.00	0.00	0.00	0.00	0.00	8.29	0.04
120.00	60.00	0.00	0.00	0.07	0.41	3.78	4.54	2.81	49.79	0.00	0.00	0.00	0.00	0.00	0.00	8.43	0.04

Multi-Chem Analytical Laboratory
1553 East Highway 40
Vernal, UT 84078

multi-chem®
A HALLIBURTON SERVICE

Water Analysis Report

		Hemihydrate CaSO4~0.5H2O		Anhydrate CaSO4		Calcium Fluoride		Zinc Carbonate		Lead Sulfide		Mg Silicate		Ca Mg Silicate		Fe Silicate	
Temp (°F)	PSI	SI	PTB	SI	PTB	SI	PTB	SI	PTB	SI	PTB	SI	PTB	SI	PTB	SI	PTB
210.00	60.00	0.00	0.00	0.00	0.00	0.00	0.00	0.31	0.02	8.40	0.02	0.27	0.69	0.00	0.00	10.73	4.64
200.00	60.00	0.00	0.00	0.00	0.00	0.00	0.00	0.23	0.02	8.54	0.02	0.00	0.00	0.00	0.00	10.40	4.64
190.00	60.00	0.00	0.00	0.00	0.00	0.00	0.00	0.14	0.01	8.70	0.02	0.00	0.00	0.00	0.00	10.07	4.64
180.00	60.00	0.00	0.00	0.00	0.00	0.00	0.00	0.05	0.01	8.86	0.02	0.00	0.00	0.00	0.00	9.74	4.64
170.00	60.00	0.00	0.00	0.00	0.00	0.00	0.00	0.00	0.00	9.04	0.02	0.00	0.00	0.00	0.00	9.40	4.64
160.00	60.00	0.00	0.00	0.00	0.00	0.00	0.00	0.00	0.00	9.22	0.02	0.00	0.00	0.00	0.00	9.06	4.64
150.00	60.00	0.00	0.00	0.00	0.00	0.00	0.00	0.00	0.00	9.42	0.02	0.00	0.00	0.00	0.00	8.73	4.64
140.00	60.00	0.00	0.00	0.00	0.00	0.00	0.00	0.00	0.00	9.63	0.02	0.00	0.00	0.00	0.00	8.39	4.64
130.00	60.00	0.00	0.00	0.00	0.00	0.00	0.00	0.00	0.00	9.86	0.02	0.00	0.00	0.00	0.00	8.06	4.64
120.00	60.00	0.00	0.00	0.00	0.00	0.00	0.00	0.00	0.00	10.09	0.02	0.00	0.00	0.00	0.00	7.73	4.64

These scales have positive scaling potential under initial temperature and pressure: Calcium Carbonate Iron Sulfide Iron Carbonate Zinc Sulfide Zinc Carbonate Lead Sulfide Mg Silicate Fe Silicate

These scales have positive scaling potential under final temperature and pressure: Barium Sulfate Iron Sulfide Iron Carbonate Zinc Sulfide Lead Sulfide Fe Silicate

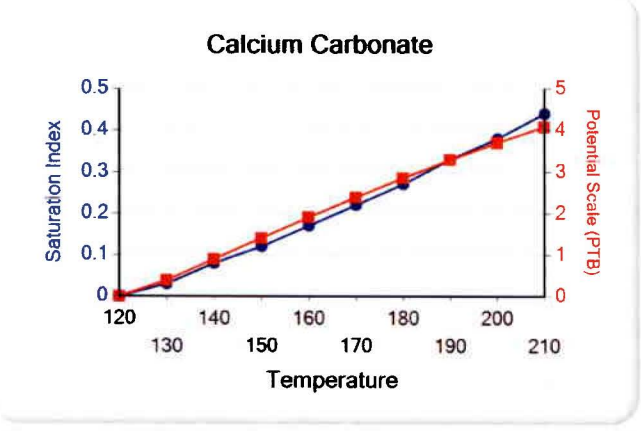

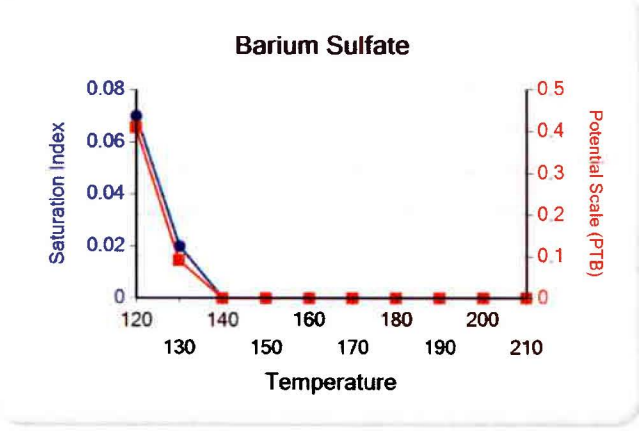

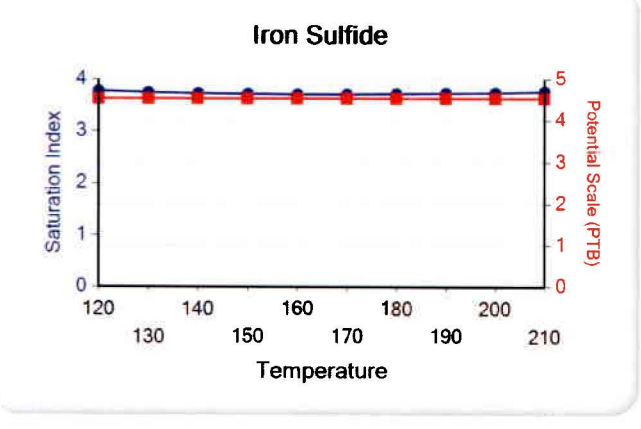

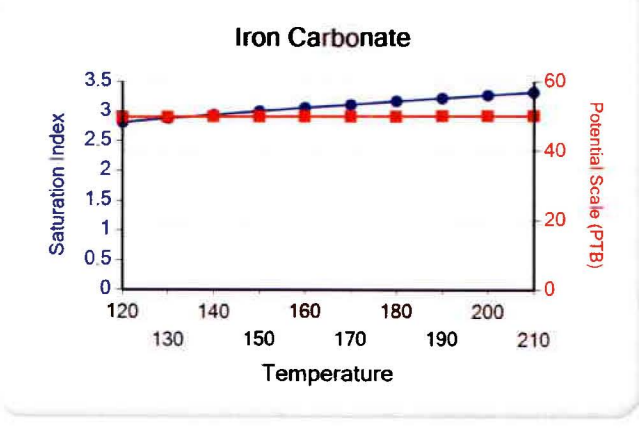

Multi-Chem Analytical Laboratory
1553 East Highway 40
Vernal, UT 84078

multi-chem®
A HALLIBURTON SERVICE

Water Analysis Report

Lead Sulfide

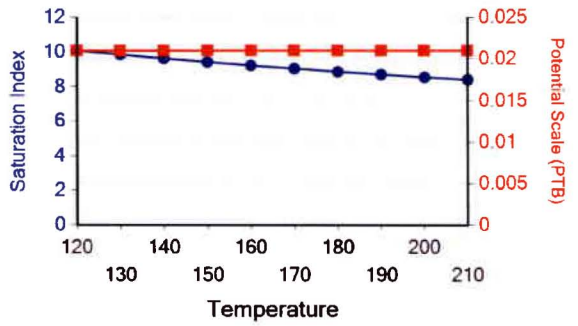

Zinc Sulfide

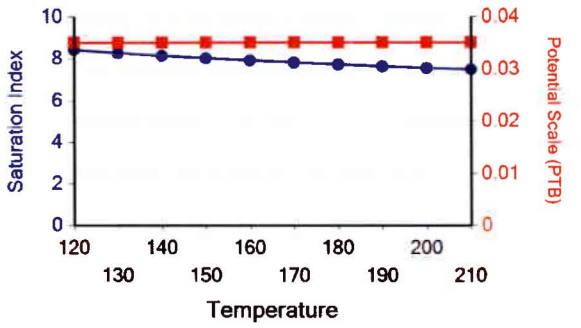

Zinc Carbonate

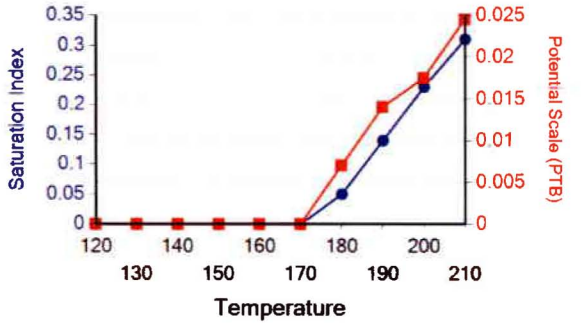

Mg Silicate

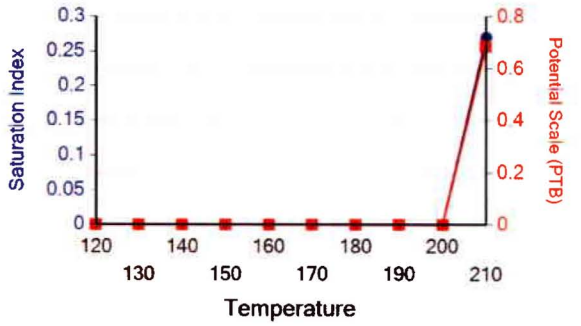

Multi-Chem Analytical Laboratory
1553 East Highway 40
Vernal, UT 84078

multi-chem
A HALLIBURTON SERVICE

Water Analysis Report

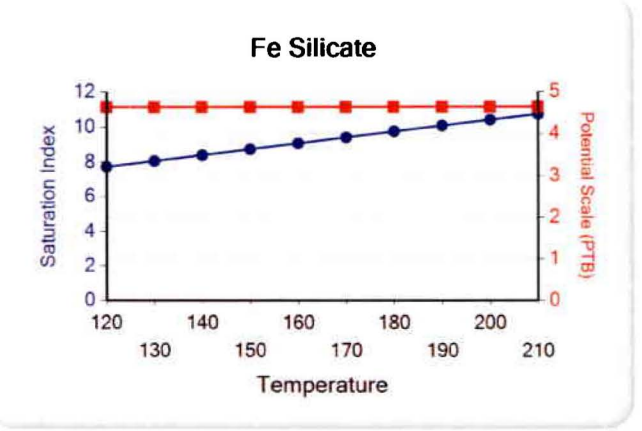

ATTACHMENT F 5 of 6

multi-chem®
A HALLIBURTON SERVICE

Multi-Chem Analytical Laboratory
1553 East Highway 40
Vernal, UT 84078

Units of Measurement: **Standard**

Water Analysis Report

Production Company: **NEWFIELD PRODUCTION**
Well Name: **SWDIF**
Sample Point: **After Filter**
Sample Date: **12/4/2012**
Sample ID: **WA-229142**

Sales Rep: **Michael McBride**
Lab Tech: **Gary Peterson**

Scaling potential predicted using ScaleSoftPitzer from Brine Chemistry Consortium (Rice University)

Sample Specifics	
Test Date:	12/5/2012
System Temperature 1 (°F):	120.00
System Pressure 1 (psig):	60.0000
System Temperature 2 (°F):	210.00
System Pressure 2 (psig):	60.0000
Calculated Density (g/ml):	0.999
pH:	6.80
Calculated TDS (mg/L):	2304.49
CO_2 in Gas (%):	
Dissolved CO_2 (mg/L)):	15.00
H_2S in Gas (%):	
H_2S in Water (mg/L):	2.50

Analysis @ Properties in Sample Specifics			
Cations	*mg/L*	*Anions*	*mg/L*
Sodium (Na):	734.93	Chloride (Cl):	1000.00
Potassium (K):	11.00	Sulfate (SO_4):	120.00
Magnesium (Mg):	26.00	Bicarbonate (HCO_3):	366.00
Calcium (Ca):	46.20	Carbonate (CO_3):	
Strontium (Sr):		Acetic Acid (CH_3COO)	
Barium (Ba):	0.17	Propionic Acid (C_2H_5COO)	
Iron (Fe):	0.13	Butanoic Acid (C_3H_7COO)	
Zinc (Zn):	0.02	Isobutyric Acid ($(CH_3)_2CHCOO$)	
Lead (Pb):	0.00	Fluoride (F):	
Ammonia NH_3:		Bromine (Br):	
Manganese (Mn):	0.04	Silica (SiO_2):	

Notes:
9:30

(PTB = Pounds per Thousand Barrels)

		Calcium Carbonate		Barium Sulfate		Iron Sulfide		Iron Carbonate		Gypsum $CaSO_4 \cdot 2H_2O$		Celestite $SrSO_4$		Halite NaCl		Zinc Sulfide	
Temp (°F)	PSI	SI	PTB	SI	PTB	SI	PTB	SI	PTB	SI	PTB	SI	PTB	SI	PTB	SI	PTB
210.00	60.00	0.28	10.64	0.00	0.00	0.20	0.02	0.00	0.00	0.00	0.00	0.00	0.00	0.00	0.00	6.28	0.01
200.00	60.00	0.19	7.48	0.00	0.00	0.13	0.02	0.00	0.00	0.00	0.00	0.00	0.00	0.00	0.00	6.31	0.01
190.00	60.00	0.11	4.25	0.00	0.00	0.07	0.01	0.00	0.00	0.00	0.00	0.00	0.00	0.00	0.00	6.35	0.01
180.00	60.00	0.02	0.97	0.00	0.00	0.01	0.00	0.00	0.00	0.00	0.00	0.00	0.00	0.00	0.00	6.39	0.01
170.00	60.00	0.00	0.00	0.00	0.00	0.00	0.00	0.00	0.00	0.00	0.00	0.00	0.00	0.00	0.00	6.44	0.01
160.00	60.00	0.00	0.00	0.00	0.00	0.00	0.00	0.00	0.00	0.00	0.00	0.00	0.00	0.00	0.00	6.50	0.01
150.00	60.00	0.00	0.00	0.01	0.00	0.00	0.00	0.00	0.00	0.00	0.00	0.00	0.00	0.00	0.00	6.56	0.01
140.00	60.00	0.00	0.00	0.05	0.01	0.00	0.00	0.00	0.00	0.00	0.00	0.00	0.00	0.00	0.00	6.64	0.01
130.00	60.00	0.00	0.00	0.10	0.02	0.00	0.00	0.00	0.00	0.00	0.00	0.00	0.00	0.00	0.00	6.72	0.01
120.00	60.00	0.00	0.00	0.15	0.03	0.00	0.00	0.00	0.00	0.00	0.00	0.00	0.00	0.00	0.00	6.80	0.01

ATTACHMENT F

6 of 6

Multi-Chem Analytical Laboratory
1553 East Highway 40
Vernal, UT 84078

multi-chem®
A HALLIBURTON SERVICE

Water Analysis Report

		Hemihydrate CaSO4~0.5H2O		Anhydrate CaSO4		Calcium Fluoride		Zinc Carbonate		Lead Sulfide		Mg Silicate		Ca Mg Silicate		Fe Silicate	
Temp (°F)	PSI	SI	PTB	SI	PTB	SI	PTB	SI	PTB	SI	PTB	SI	PTB	SI	PTB	SI	PTB
210.00	60.00	0.00	0.00	0.00	0.00	0.00	0.00	0.00	0.00	0.00	0.00	0.00	0.00	0.00	0.00	0.00	0.00
200.00	60.00	0.00	0.00	0.00	0.00	0.00	0.00	0.00	0.00	0.00	0.00	0.00	0.00	0.00	0.00	0.00	0.00
190.00	60.00	0.00	0.00	0.00	0.00	0.00	0.00	0.00	0.00	0.00	0.00	0.00	0.00	0.00	0.00	0.00	0.00
180.00	60.00	0.00	0.00	0.00	0.00	0.00	0.00	0.00	0.00	0.00	0.00	0.00	0.00	0.00	0.00	0.00	0.00
170.00	60.00	0.00	0.00	0.00	0.00	0.00	0.00	0.00	0.00	0.00	0.00	0.00	0.00	0.00	0.00	0.00	0.00
160.00	60.00	0.00	0.00	0.00	0.00	0.00	0.00	0.00	0.00	0.00	0.00	0.00	0.00	0.00	0.00	0.00	0.00
150.00	60.00	0.00	0.00	0.00	0.00	0.00	0.00	0.00	0.00	0.00	0.00	0.00	0.00	0.00	0.00	0.00	0.00
140.00	60.00	0.00	0.00	0.00	0.00	0.00	0.00	0.00	0.00	0.00	0.00	0.00	0.00	0.00	0.00	0.00	0.00
130.00	60.00	0.00	0.00	0.00	0.00	0.00	0.00	0.00	0.00	0.00	0.00	0.00	0.00	0.00	0.00	0.00	0.00
120.00	60.00	0.00	0.00	0.00	0.00	0.00	0.00	0.00	0.00	0.00	0.00	0.00	0.00	0.00	0.00	0.00	0.00

These scales have positive scaling potential under initial temperature and pressure: Calcium Carbonate Iron Sulfide Zinc Sulfide

These scales have positive scaling potential under final temperature and pressure: Barium Sulfate Zinc Sulfide

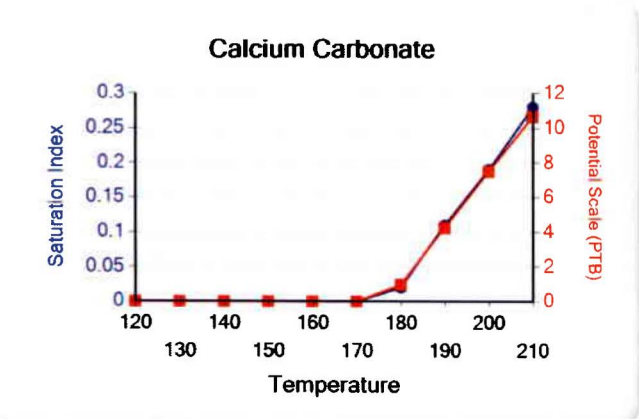

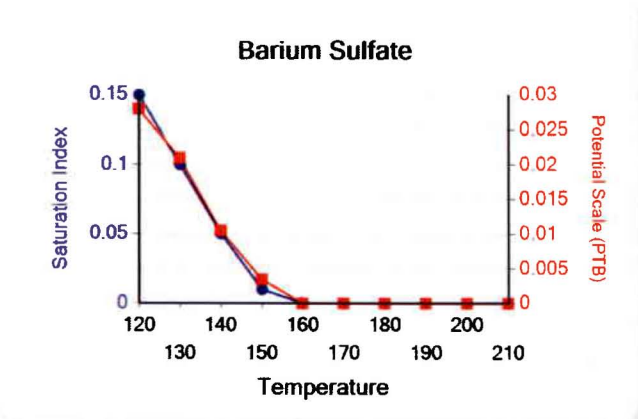

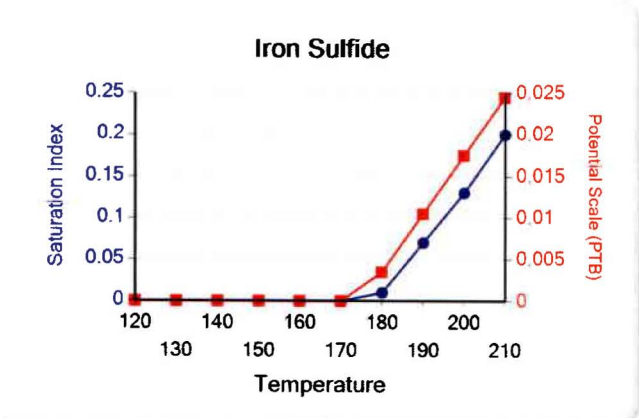

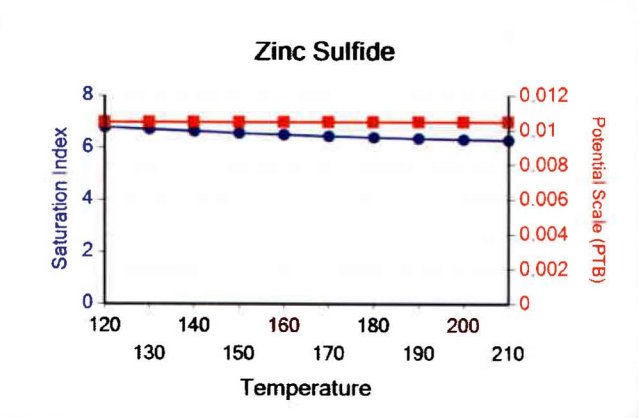

Attachment "G"

Federal #14-19-9-16
Proposed Maximum Injection Pressure

Frac Interval (feet) Top	Bottom	Avg. Depth (feet)	ISIP (psi)	Calculated Frac Gradient (psi/ft)	Pmax
5452	5460	5456	1839	0.77	1804
4976	4989	4983	2369	0.91	2337
4780	4852	4816	1790	0.81	1759 ←
				Minimum	1759

Calculation of Maximum Surface Injection Pressure
Pmax = (Frac Grad -(0.433*1.015)) x Depth of Top Perf
where pressure gradient for the fresh water is .433 psi/ft and
specific gravity of the injected water is 1.015.

Frac Gradient = (ISIP +(0.433*Top Perf.))/Top Perf.

Please note: These are existing perforations; additional perforations may be added during the actual conversion procedure.

Daily Activity Report

Format For Sundry

FEDERAL 14-19-9-16

11/1/2006 To 5/28/2007

2/17/2007 Day: 1 **Completion**

Rigless on 2/20/2007 - Install 5M frac head. NU Cameron BOP. RU H/O truck & pressure test casing, frac head, blind rams & casing valves to 4500 psi. RU Perforators LLC WLT w/ mast & run CBL under pressure. WLTD @ 5927' & cement top @ 136'. Perforate stage #1 W/ 4" ported gun as follows: CP1 sds @ 5452-5460' W/ 4 JSPF for total of 32 shots. RD WLT. SIFN W/ est 142 BWTR.

2/22/2007 Day: 2 **Completion**

Rigless on 2/21/2007 - RU BJ Services. 10 psi on well. Frac CP1 sds w/ 34,903#'s of 20/40 sand in 471 bbls of Lightning 17 fluid. Broke @ 2483 psi. Treated w/ ave pressure of 2080 psi @ ave rate of 24.8 BPM. Pumped 504 gals of 15% HCL in flush for Stage #2. ISIP 1839 psi. Leave pressure on well. 613 BWTR. RU Lone Wolf WLT, crane & lubricator. RIH w/ 5-1/2" Weatherford composite flow through plug & 13' perf gun. Set plug @ 5100'. Perforate A1 sds @ 4976- 89' w/ 3-1/8" Slick Guns (23 gram, .43"HE, 90°) w/ 4 SPF for total of 52 shots. RU BJ Services. 1607 psi on well. Pressured up to 4200 psi, Would not breakdown. RU Lone Wolf WL & dump bail acid. RU BJ Services. 1515 psi on well. Frac A1 sds w/ 80,502#'s of 20/40 sand in 597 bbls of Lightning 17 fluid. Broke @ 3677 psi. Treated w/ ave pressure of 2245 psi @ ave rate of 24.6 BPM. Pumped 504 gals of 15% HCL in flush for Stage #3. ISIP 2369 psi. Leave pressure on well. RU Lone Wolf WLT, crane & lubricator. RIH w/ 5-1/2" Weatherford composite flow through plug, 9' & 12' perf gun. Set plug @ 4930'. Perforate B2 sds @ 4843- 52', B1 sds @ 4780- 92' w/ 3-1/8" Slick Guns (23 gram, .43"HE, 90°) w/ 4 SPF for total of 84 shots (2 runs). SIWFN w/ 1210 BWTR.

2/23/2007 Day: 3 **Completion**

Rigless on 2/22/2007 - RU BJ Services. 460 psi on well. Frac B1 & B2 sds w/ 159,255#'s of 20/40 sand in 1026 bbls of Lightning 17 fluid. Broke @ 3675 psi. Treated w/ ave pressure of 1675 psi @ ave rate of 24.8 BPM. ISIP 1790 psi. Begin immediate flowback on 12/64 choke @ 1 BPM. Flowed for 4 hrs & died. Rec. 235 BTF. SIWFN w/ 2001 BWTR.

2/26/2007 Day: 4 **Completion**

Rigless on 2/23/2007 - 6:30AM MIRUSU, OWU, N/D 10,000 BOP & Frac Flnge, N/U 3, 000 Flnge & 5,000 BOP, P/U & RIH W/-4 3/4 Bit, Bit Sub, 158 Jts Tbg To Fill @ 4898', R/U Nabors Pwr Swvl, R/U R/pmp, C/Out To Plg @ 4930', Drill Up Plg, Swvl I/Hle To Plg @ 5100', Drill Up Plg, Swvl I/Hle To Fill @ 5827', C/Out To 5971', Curc Well Clean, POOH W/-2 Jts Tbg EOB @ 5907', SWI, 6:00PM C/SDFN. Gained 43 Bbls Wtr Thru Day.

2/27/2007 Day: 5 **Completion**

NC #1 on 2/26/2007 - 6:30AM OWU, RIH W/-Tbg To Fill @ 5971', R/U Nabors Pwr Swvl, Drill & C/Out To PBTD @ 5990', Curc Well Clean 1 Hr, R/D Pwr Swvl, POOH W/-5 Jts Tbg, EOB @ 5856', R/U Swab, RIH IFL @ Surf, Made 13 Swab Runs, Recvred 152 Bbls Wtr, Lite Trce Sand, Lite Trce Oil, FFL @ 1700', RIH W/-Tbg To PBTD @ 5990', No Fill, R/U R/pmp, Curc Well Clean, POOH W/-193 Jts Tbg, Bit Sub & Bit.

P/U & RIH W/-N/C, 2 Jts Tbg, S/N, 2 Jts Tbg, 5 1/2 T/A, 174 Jts Tbg, EOT @ 5545' , SWI, 6:30PM C/SDFN, Lost 34 Bbls Wtr On Drill Out To PBTD, Recvred 152 Bbls Wtr Swabbing, Lost 107 Bbls Wtr On Curc Out @ PBTD, Total Wtr Recovery For Day = 11 Bbls.

2/28/2007 Day: 6 **Completion**

NC #1 on 2/27/2007 - 6:30AM OWU, N/D BOP, Set 5 1/2 T/A In 15,000 Tension, N/U W/-HD, P/U Stroke & RIH W/- CDI-2 1/2x 1 1/2x12x16' RHAC, 6-1 1/2x25' Wt Bars, 10-3/4x25' Scrapered Rods, 103-3/4x25' Slick Rods, 100-3/4x25' Scrapered Rods, 1-3/4x8'-1-3/4x6'-2-3/4x4' Ponys, 1 1/2x22' Polish Rod, R/U Unit, R/U R/pmp, Fill Tbg W/-1 Bbl Wtr, Stroke Unit & Tbg To 800 Psi, Good Test. R/D Rig. POP @ 12:00PM, 86" SL, 5 SPM, 1Bbl Wtr Loss For Day, (Final Report).

Pertinent Files: Go to File List

ATTACHMENT H

WORK PROCEDURE FOR PLUGGING AND ABANDONMENT

1.		Set CIBP @ 4730'
2.	Plug #1	Set 100' plug on top of CIBP using 12 sx Class "G" cement
3.	Plug #2	187' balance plug using 22 sx Class "G" cement 50' above Trona-Bird's Nest extending 50' below base of Mahogany Oil Shale
4.	Plug #3	120' balance plug using 14sx Class "G" cement 60' above Uinta/Green River and extending 60' below
5.	Plug #4	Pump 43 sx Class "G" cement down 5 ½" casing to 372'

The approximate cost to plug and abandon this well is $42,000.

ATTACHMENT H-1

FEDERAL 14-19-9-16

Spud Date: 01/23/07
Put on Production: 02/27/07

GL: 6245' KB: 6257'

Initial Production: BOPD, MCFD, BWPD

Proposed P & A
Wellbore Diagram

SURFACE CASING

CSG SIZE: 8-5/8"
GRADE: J-55
WEIGHT: 24#
LENGTH: 7 jts. (310.59')
DEPTH LANDED: 322.44' KB
HOLE SIZE:12-1/4"
CEMENT DATA: 160 sxs Class "G" cmt, est 2.25 bbls cmt to surf.

PRODUCTION CASING

CSG SIZE: 5-1/2"
GRADE: J-55
WEIGHT: 15.5#
LENGTH: 137 jts. (5979.73')
DEPTH LANDED: 5992.98' KB
HOLE SIZE: 7-7/8"
CEMENT DATA: 300 sxs Prem. Lite II mixed & 450 sxs 50/50 POZ.
CEMENT TOP: 136'

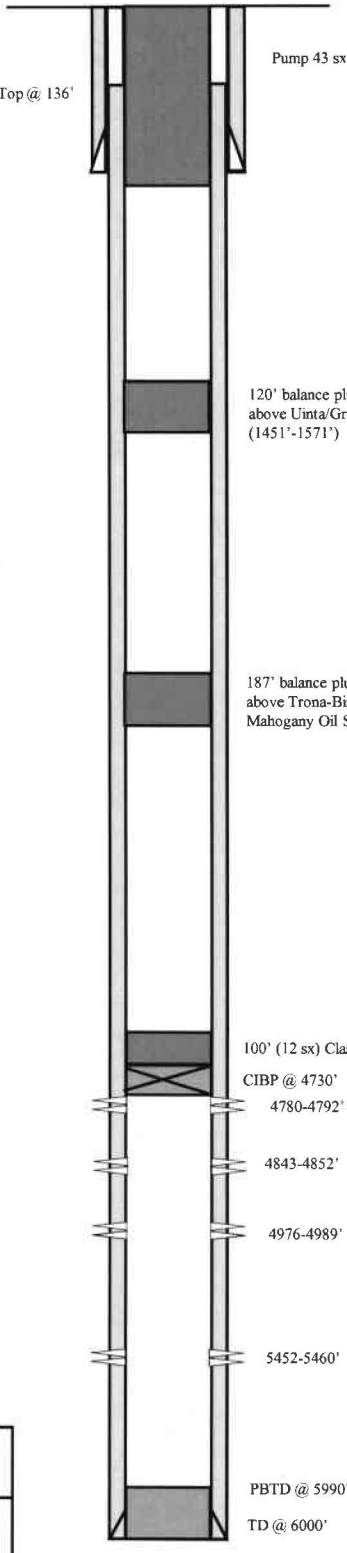

NEWFIELD

FEDERAL 14-19-9-16

452'FSL & 2258' FWL

SE/SW Section 19-T9S-R16E

Duchesne Co, Utah

API #43-013-33161; Lease # UTU-74391

JL 12/3/2013