Form 3160-3
(September 2001)

FORM APPROVED
OMB No. 1004-0136
Expires January 31, 2004

UNITED STATES
DEPARTMENT OF THE INTERIOR
BUREAU OF LAND MANAGEMENT

APPLICATION FOR PERMIT TO DRILL OR REENTER

5. Lease Serial No.
UTU-64379

6. If Indian, Allottee or Tribe Name
N/A

7. If Unit or CA Agreement, Name and No.
N/A

8. Lease Name and Well No.
Federal 6-19-9-16

1a. Type of Work: [x] DRILL [ ] REENTER

1b. Type of Well: [x] Oil Well [ ] Gas Well [ ] Other [x] Single Zone [ ] Multiple Zone

2. Name of Operator
Newfield Production Company

9. API Well No. 43-013-32100

3a. Address
Route #3 Box 3630, Myton UT 84052

3b. Phone No. *(include area code)*
(435) 646-3721

10. Field and Pool, or Exploratory
Monument Butte 105

4. Location of Well *(Report location clearly and in accordance with any State requirements.*)*
At surface SE/NW 1941' FNL 1851' FWL 571360X 40.018410
At proposed prod. zone 4429925Y -110.163810

11. Sec., T., R., M., or Blk. and Survey or Area
SE/NW Sec. 19, T9S R16E

14. Distance in miles and direction from nearest town or post office*
Approximatley 14.1 miles southwest of Myton, Utah

12. County or Parish
Duchesne

13. State
UT

15. Distance from proposed* location to nearest property or lease line, ft. (Also to nearest drlg. unit line, if any) Approx. 699' f/lse, NA' f/unit

16. No. of Acres in lease
1626.36

17. Spacing Unit dedicated to this well
40 Acres

18. Distance from proposed location* to nearest well, drilling, completed, applied for, on this lease, ft. Approx. 1291'

19. Proposed Depth
5800'

20. BLM/BIA Bond No. on file
UTB000192

21. Elevations (Show whether DF, KDB, RT, GL, etc.)
5988' GL

22. Approximate date work will start*
2nd Quarter 2006

23. Estimated duration
Approximately seven (7) days from spud to rig release.

24. Attachments

The following, completed in accordance with the requirements of Onshore Oil and Gas Order No.1, shall be attached to this form:

1. Well plat certified by a registered surveyor.
2. A Drilling Plan.
3. A Surface Use Plan (if the location is on National Forest System Lands, the SUPO shall be filed with the appropriate Forest Service Office).
4. Bond to cover the operations unless covered by an existing bond on file (see Item 20 above).
5. Operator certification.
6. Such other site specific information and/or plans as may be required by the authorized officer.

25. Signature Mandie Crozier
Name *(Printed/Typed)* Mandie Crozier
Date 3/17/06

Title Regulatory Specialist

Approved by *(Signature)* Bradley G. Hill
Name *(Printed/Typed)* BRADLEY G. HILL
Date 03-27-06

Title ENVIRONMENTAL MANAGER
Office

Application approval does not warrant or certify the the applicant holds legal or equitable title to those rights in the subject lease which would entitle the applicant to conduct operations thereon.
Conditions of approval, if any, are attached.

Title 18 U.S.C. Section 1001 and Title 43 U.S.C. Section 1212, make it a crime for any person knowingly and willfully to make to any department or agency of the United States any false, fictitious or fraudulent statements or representations as to any matter within its jurisdiction.

**(Instructions on reverse)*

Federal Approval of this Action is Necessary

RECEIVED
MAR 21 2006
DIV. OF OIL, GAS & MINING

T9S, R16E, S.L.B.&M.

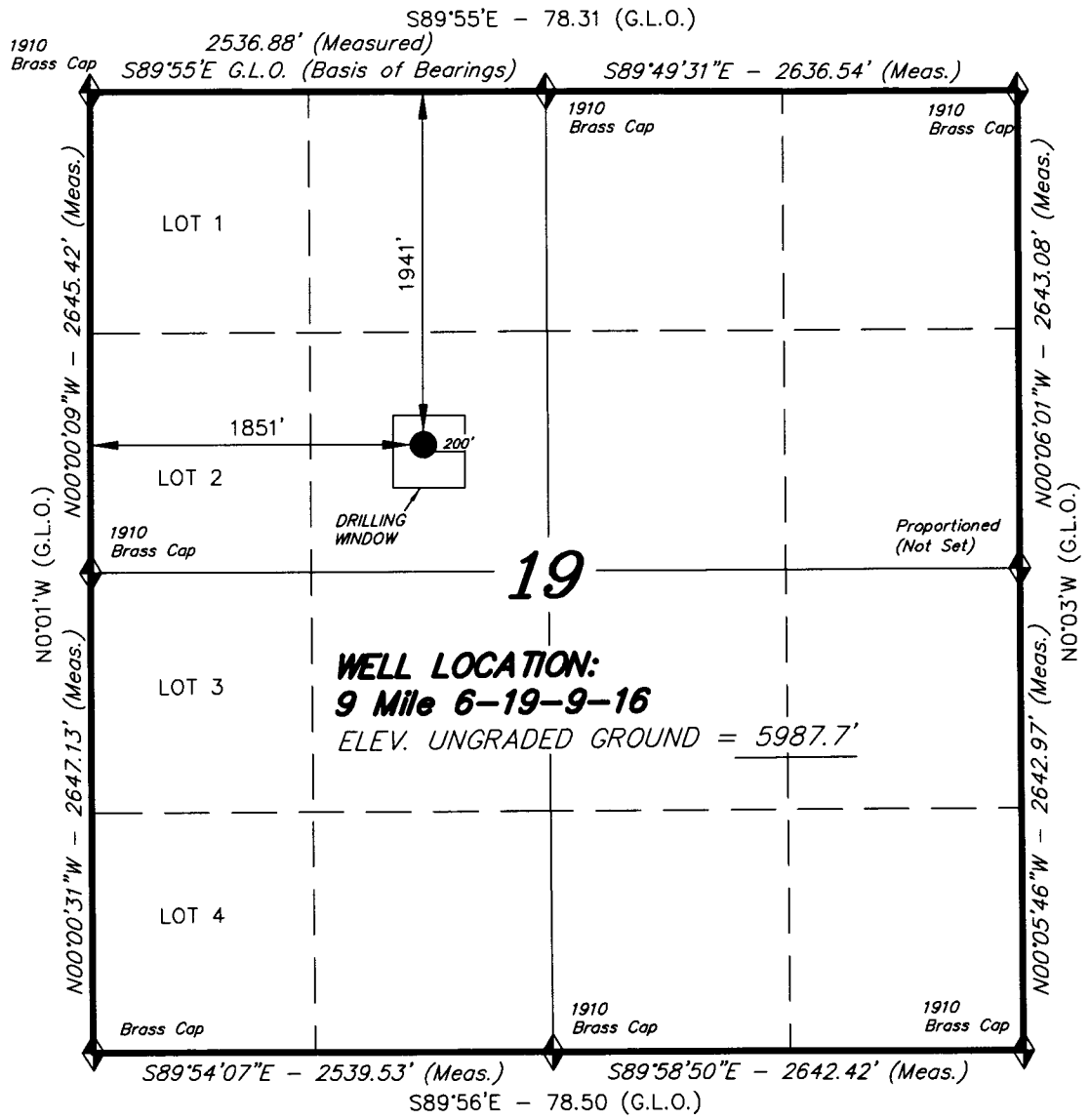

◆ = SECTION CORNERS LOCATED

BASIS OF ELEV;
U.S.G.S. 7-1/2 min QUAD (MYTON SW)

9 Mile 6-19-9-16
(Surface Location) NAD 83
LATITUDE = 40° 01' 06.06"
LONGITUDE = 110° 09' 52.27"

NEWFIELD PRODUCTION COMPANY

WELL LOCATION, 9 Mile 6-19-9-16, LOCATED AS SHOWN IN THE SE 1/4 NW 1/4 OF SECTION 19, T9S, R16E, S.L.B.&M. DUCHESNE COUNTY, UTAH.

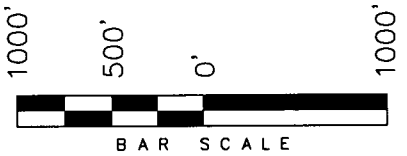

THIS IS TO CERTIFY THAT THE ABOVE PLAT WAS PREPARED FROM FIELD NOTES OF ACTUAL SURVEYS MADE BY ME OR UNDER MY SUPERVISION AND THAT THE SAME ARE TRUE AND CORRECT TO THE BEST OF MY KNOWLEDGE AND BELIEF.

REGISTERED LAND SURVEYOR
REGISTRATION No. 189377
STATE OF UTAH

STACY W. STEWART
REGISTERED LAND SURVEYOR
REGISTRATION No. 189377
STATE OF UTAH

TRI STATE LAND SURVEYING & CONSULTING
180 NORTH VERNAL AVE. – VERNAL, UTAH 84078
(435) 781-2501

DATE SURVEYED: 2-20-06	SURVEYED BY: C.M.
DATE DRAWN: 2-28-06	DRAWN BY: M.W.
REVISED:	SCALE: 1" = 1000'

NEWFIELD

March 17, 2006

State of Utah
Division of Oil, Gas & Mining
Attn: Diana Whitney
1594 West North Temple - Suite 1210
P.O. Box 145801
Salt Lake City, Utah 84114-5801

RE: Applications for Permit to Drill: Federal 6-19-9-16, 8-19-9-16, 12-19-9-16, 13-19-9-16, 5-20-9-16, and 15-20-9-16.

Dear Diana:

Enclosed find APD's on the above referenced wells. If you have any questions, feel free to give either Shon Mckinnon or myself a call.

Sincerely,

Mandie Crozier

Mandie Crozier
Regulatory Specialist

mc
enclosures

RECEIVED
MAR 21 2006
DIV. OF OIL, GAS & MINING

Newfield Exploration Company Route 3 Box 3630 Myton, UT 84052 (435) 646-3721 Fax (435) 646-3031

NEWFIELD PRODUCTION COMPANY
FEDERAL #6-19-9-16
SE/NW SECTION 19, T9S, R16E
DUCHESNE COUNTY, UTAH

ONSHORE ORDER NO. 1

DRILLING PROGRAM

1. ***GEOLOGIC SURFACE FORMATION:***

Uinta formation of Upper Eocene Age

2. ***ESTIMATED TOPS OF IMPORTANT GEOLOGIC MARKERS:***

Uinta	0' – 2205'
Green River	2205'
Wasatch	5800'

3. ***ESTIMATED DEPTHS OF ANTICIPATED WATER, OIL, GAS OR MINERALS:***

Green River Formation 2205' – 5800' - Oil

4. ***PROPOSED CASING PROGRAM***

Please refer to the Monument Butte Field Standard Operation Procedure (SOP).

5. ***MINIMUM SPECIFICATIONS FOR PRESSURE CONTROL:***

Please refer to the Monument Butte Field SOP. See Exhibit "C".

6. ***TYPE AND CHARACTERISTICS OF THE PROPOSED CIRCULATION MUDS:***

Please refer to the Monument Butte Field SOP.

7. ***AUXILIARY SAFETY EQUIPMENT TO BE USED:***

Please refer to the Monument Butte Field SOP.

8. ***TESTING, LOGGING AND CORING PROGRAMS:***

Please refer to the Monument Butte Field SOP.

9. ***ANTICIPATED ABNORMAL PRESSURE OR TEMPERATURE:***

The anticipated maximum bottom hole pressure is 1800 psi. It is not anticipated that abnormal temperatures will be encountered.

10. ***ANTICIPATED STARTING DATE AND DURATION OF THE OPERATIONS:***

Please refer to the Monument Butte Field SOP.

NEWFIELD PRODUCTION COMPANY
FEDERAL #6-19-9-16
SE/NW SECTION 19, T9S, R16E
DUCHESNE COUNTY, UTAH

ONSHORE ORDER NO. 1

MULTI-POINT SURFACE USE & OPERATIONS PLAN

1. EXISTING ROADS

See attached Topographic Map "A"

To reach Newfield Production Company well location site Federal #6-19-9-16 located in the SE 1/4 NW 1/4 Section 19, T9S, R16E, Duchesne County, Utah:

Proceed southwesterly out of Myton, Utah along Highway 40 - 1.6 miles ± to the junction of this highway and UT State Hwy 53; proceed southwesterly – 12.0 miles ± to it's junction with an existing road to the southwest; proceed southwesterly – 0.5 miles ± to it's junction with the beginning of the proposed access road; proceed along the proposed access road – 190'± to the proposed well location.

2. PLANNED ACCESS ROAD

See Topographic Map "B" for the location of the proposed access road.

3. LOCATION OF EXISTING WELLS

Refer to Exhibit "B".

4. LOCATION OF EXISTING AND/OR PROPOSED FACILITIES

All permanent surface equipment will be painted Carlsbad Canyon.
Please refer to the Monument Butte Field Standard Operating Procedure (SOP).

5. LOCATION AND TYPE OF WATER SUPPLY

Please refer to the Monument Butte Field SOP. See Exhibit "A".

6. SOURCE OF CONSTRUCTION MATERIALS

Please refer to the Monument Butte Field SOP.

7. METHODS FOR HANDLING WASTE DISPOSAL

Please refer to the Monument Butte Field SOP.

8. ANCILLARY FACILITIES

Please refer to the Monument Butte Field SOP.

9. WELL SITE LAYOUT

See attached Location Layout Diagram.

10. *PLANS FOR RESTORATION OF SURFACE*

Please refer to the Monument Butte Field SOP.

11. *SURFACE OWNERSHIP* - Bureau Of Land Management

12. *OTHER ADDITIONAL INFORMATION*

The Archaeological Resource Survey and Paleontological Resource Survey for this area are attached. MOAC Report #05-225, 7/13/05. Paleontological Resource Survey prepared by, Wade E. Miller, 11/10/05. See attached report cover pages, Exhibit "D".

For the Federal #6-19-9-16 Newfield Production Company requests 190' of disturbed area be granted in Lease UTU-64379 to allow for construction of the proposed access road. **Refer to Topographic Map "B".** The proposed access road will be an 18' crown road (9' either side of the centerline) with drainage ditches along either side of the proposed road whether it is deemed necessary in order to handle any run-off from normal meteorological conditions that are prevalent to this area. The maximum grade will be less than 8%. There will be no culverts required along this access road. There will be barrow ditches and turnouts as needed along this road. There are no fences encountered along this proposed road. There will be no new gates or cattle guards required. All construction material for this access road will be borrowed material accumulated during construction of the access road.

Newfield Production Company requests 190' of disturbed area be granted in Lease UTU-64379 to allow for construction of the proposed gas lines. It is proposed that the disturbed area will be 50' wide to allow for construction of a buried 6" gas gathering line, and a buried 3" poly fuel gas line. Both lines will tie in to the existing pipeline infrastructure. **Refer to Topographic Map "C."** For a ROW plan of development, please refer to the Monument Butte Field SOP.

Water Disposal
Immediately upon first production, all produced water will be confined to a steel storage tank. If the production water meets quality guidelines, it is transported to the Ashley, Monument Butte, Jonah, and Beluga water injection facilities by company or contract trucks. Subsequently, the produced water is injected into approved Class II wells to enhance Newfield's secondary recovery project.

Water not meeting quality criteria, is disposed at Newfield's Pariette #4 disposal well (Sec. 7, T9S R19E) or at State of Utah approved surface disposal facilities.

Threatened, Endangered, And Other Sensitive Species
Golden Eagle: Due to this proposed well access roads proximity (less that 0.5 mile) to an existing inactive golden eagle nest site, no new construction or surface disturbing activities will be allowed between March 1 and May 15. If the nest remains inactive on May 15th (based on a pre-construction survey by a qualified biologist), the operator may construct and drill the location between May 15 and March 1 of the following year. If the nest site becomes active prior to May 15, no new construction or surface disturbing activities will be allowed within 0.5 mile of the nest until the nest becomes inactive for two full breeding seasons. In the event that this well becomes a producing well, it must be equipped with a multi-cylinder engine or hospital muffler to reduce noise levels.

Sage Grouse: If new construction or surface disturbing activities are scheduled to occur between March 1 and June 30, detailed surveys of the area within 0.5 mile of the proposed location must be conducted to detect the presence of sage grouse. All surveys must be conducted in accordance with the survey protocols outlined in the most recent USFWS Survey Protocol. Surveys must be completed prior to initiating new construction or surface disturbing activities. In the event that this well becomes a producing well, it must be equipped with a multi-cylinder engine or hospital muffler to reduce noise levels.

Elk and Deer winter range: No new construction or surface disturbing activities will be allowed Dec. 1st and April 30th.

Reserve Pit Liner
A 12 mil liner with felt is required. Please refer to the Monument Butte Field SOP.

Location and Reserve Pit Reclamation
Please refer to the Monument Butte Field SOP.

The following seed mixture will be used on the topsoil stockpile, to the recontoured surface of the reserve pit, and for final reclamation: (All poundages are in pure live seed)

Crested Wheatgrass	*Agropyron Cristatum*	4 lbs/acre
Needle and Threadgrass	*Stipa Comata*	4 lbs/acre
Indian Ricegrass	*Oryzopsis Hymenoides*	4 lbs/acre

Details of the On-Site Inspection
The proposed Federal #6-19-9-16 was on-sited on 1/25/06. The following were present; Shon Mckinnon (Newfeild Production), Melissa Hawk (Bureau of Land Management), Chris Carusona (Bureau of Land Management), Todd MaGrath (Bureau of Land Management), Brandon McDonald (Bureau of Landmanagement), and Charlie Shard (SWCA). Weather conditions were clear and ground cover was 50% open.

13. *LESSEE'S OR OPERATORS REPRESENTATIVE AND CERTIFICATION*

Representative

Name:	Shon Mckinnon
Address:	Route #3 Box 3630
	Myton, UT 84052
Telephone:	(435) 646-3721

Certification

Please be advised that NEWFIELD PRODUCTION COMPANY is considered to be the operator of well #6-19-9-16 SE/NW Section 19, Township 9S, Range 16E: Lease UTU-64379 Duchesne County, Utah: and is responsible under the terms and conditions of the lease for the operations conducted upon the leased lands. Bond coverage is provided by Hartford Accident #4488944.

I hereby certify that the proposed drillsite and access route have been inspected, and I am familiar with the conditions which currently exist; that the statements made in this plan are true and correct to the best of my knowledge; and that the work associated with the operations proposed here will be performed by Newfield Production Company and its contractors and subcontractors in conformity with this plan and the terms and conditions under which it is approved. This statement is subject to the provisions of 18 U.S.C. 1001 for the filing of a false statement.

3/17/06
Date

Mandie Crozier
Regulatory Specialist
Newfield Production Company

NEWFIELD PRODUCTION COMPANY

9 MILE 6-19-9-16

Section 19, T9S, R16E, S.L.B.&M.

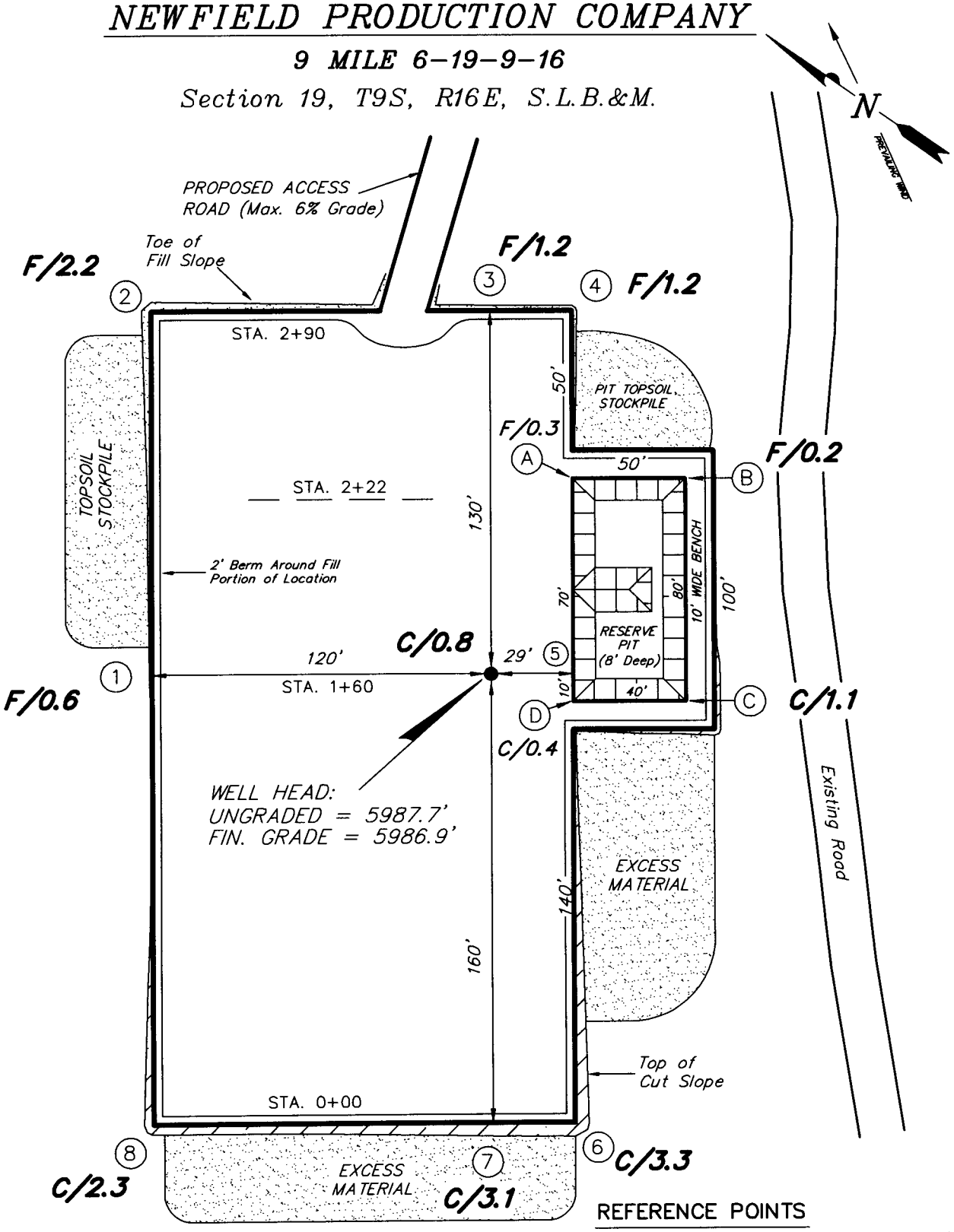

REFERENCE POINTS

210' SOUTHWESTERLY = 5990.6'
260' SOUTHWESTERLY = 5991.3'
170' NORTHWESTERLY = 5986.6'
220' NORTHWESTERLY = 5986.1'

SURVEYED BY:	C.M.	SCALE:	1" = 50'
DRAWN BY:	M.W.	DATE:	2-28-06

Tri State Land Surveying, Inc.
(435) 781-2501
180 NORTH VERNAL AVE. VERNAL, UTAH 84078

NEWFIELD PRODUCTION COMPANY

CROSS SECTIONS

9 MILE 6-19-9-16

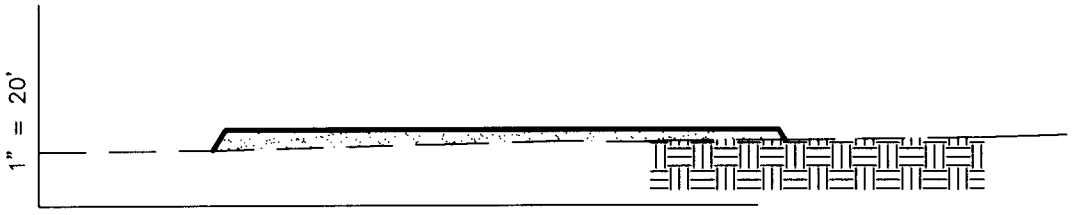

1" = 50'

STA. 2+90

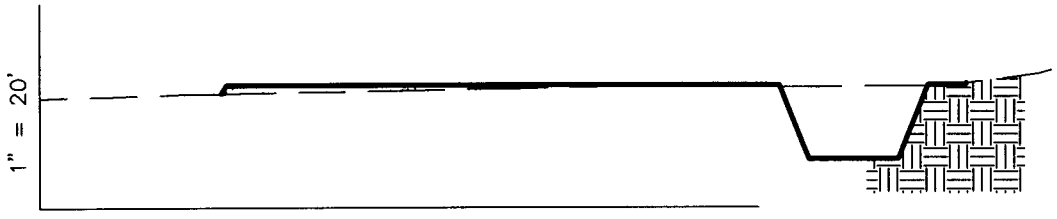

1" = 50'

STA. 2+22

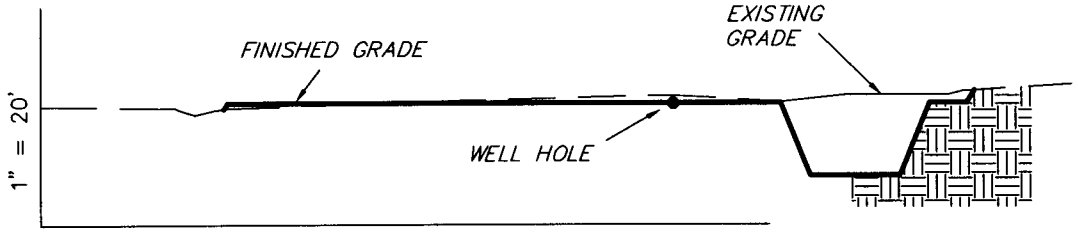

1" = 50'

STA. 1+60

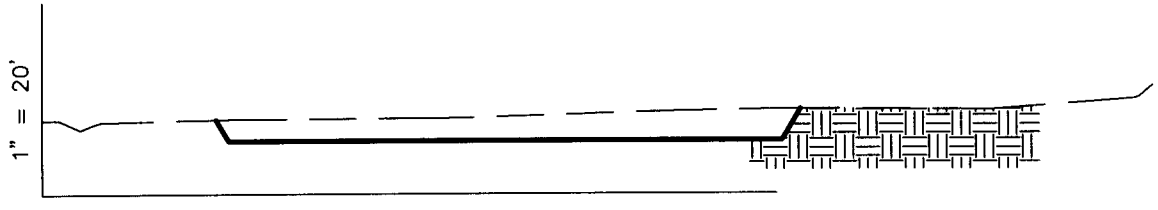

1" = 50'

STA. 0+00

ESTIMATED EARTHWORK QUANTITIES
(No Shrink or swell adjustments have been used)
(Expressed in Cubic Yards)

ITEM	CUT	FILL	6" TOPSOIL	EXCESS
PAD	860	860	Topsoil is not included in Pad Cut	0
PIT	640	0		640
TOTALS	1,500	860	930	640

NOTE:
UNLESS OTHERWISE NOTED
ALL CUT/FILL SLOPES ARE
AT 1.5:1

SURVEYED BY:	C.M.	SCALE:	1" = 50'
DRAWN BY:	M.W.	DATE:	2-28-06

Tri State Land Surveying, Inc.
(435) 781-2501
180 NORTH VERNAL AVE. VERNAL, UTAH 84078

NEWFIELD PRODUCTION COMPANY

TYPICAL RIG LAYOUT

9 MILE 6-19-9-16

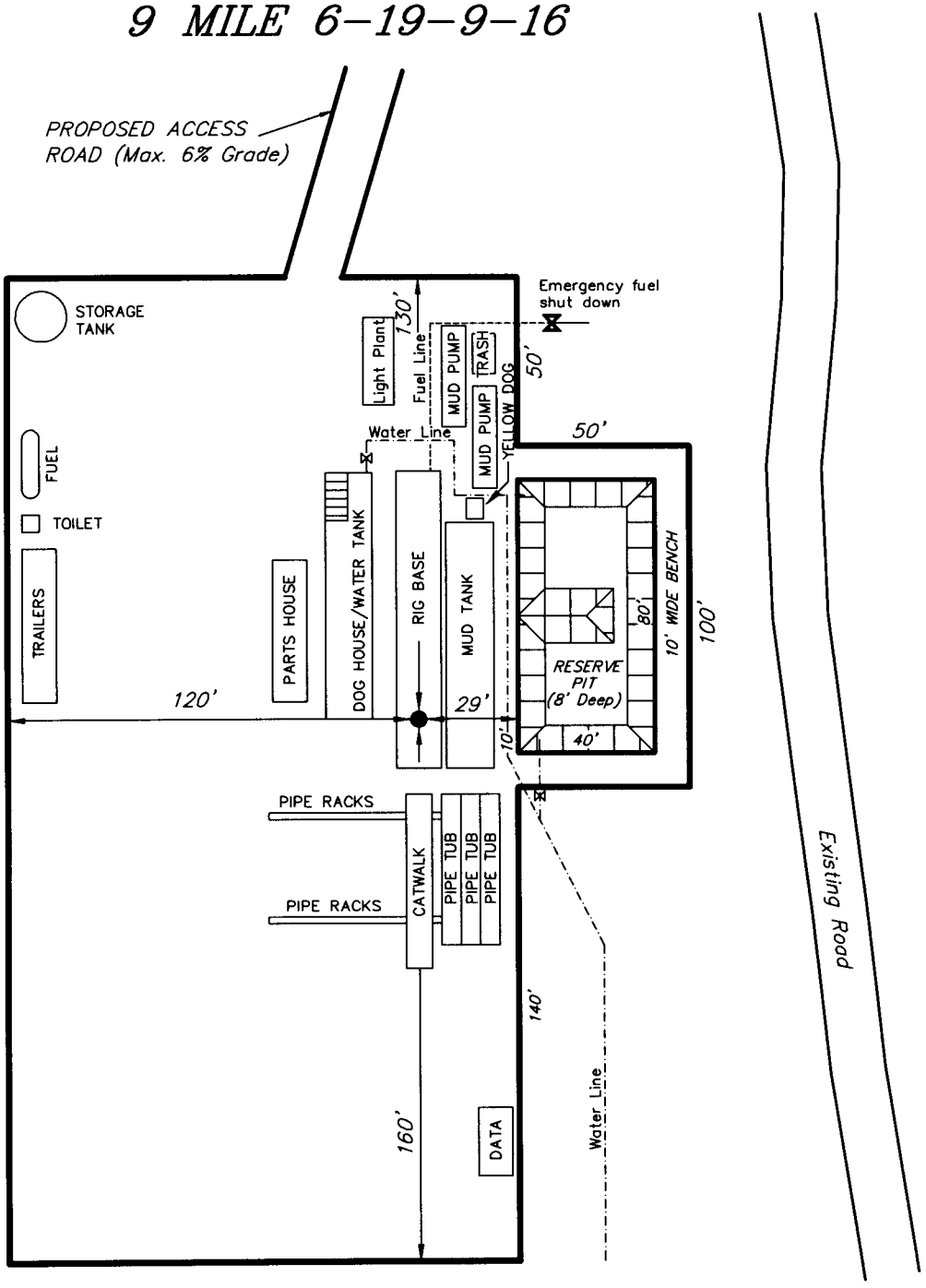

SURVEYED BY: C.M.	SCALE: 1" = 50'	Tri State Land Surveying, Inc.	(435) 781-2501
DRAWN BY: M.W.	DATE: 2-28-06	180 NORTH VERNAL AVE. VERNAL, UTAH 84078	

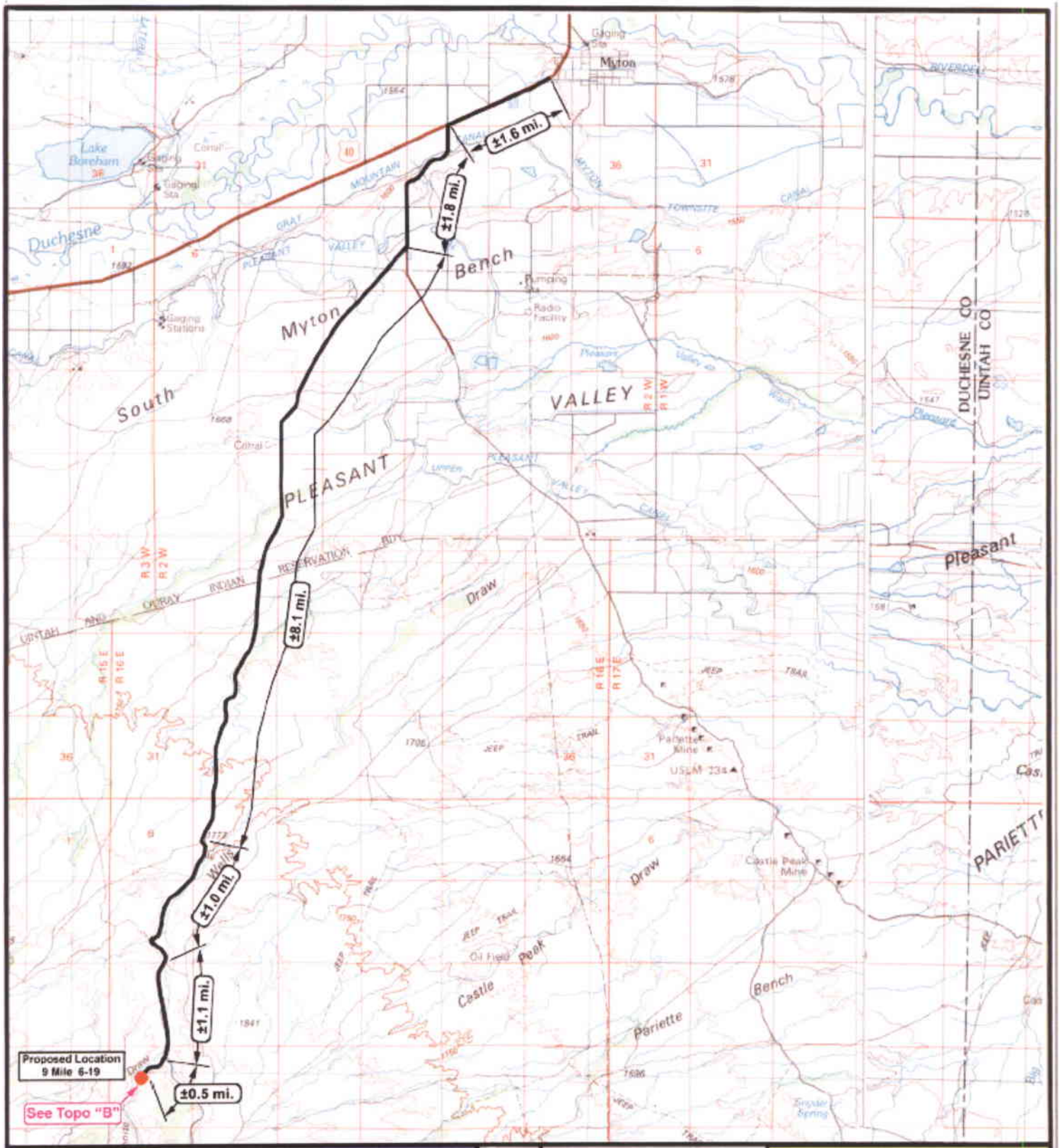

NEWFIELD
Exploration Company

9 Mile 6-19-9-16
SEC. 19, T9S, R16E, S.L.B.&M.

N

Tri-State Land Surveying Inc.
(435) 781-2501
180 North Vernal Ave. Vernal, Utah 84078

SCALE: 1 = 100,000
DRAWN BY: mw
DATE: 02-28-2006

Legend
Existing Road
Proposed Access

TOPOGRAPHIC MAP
"A"

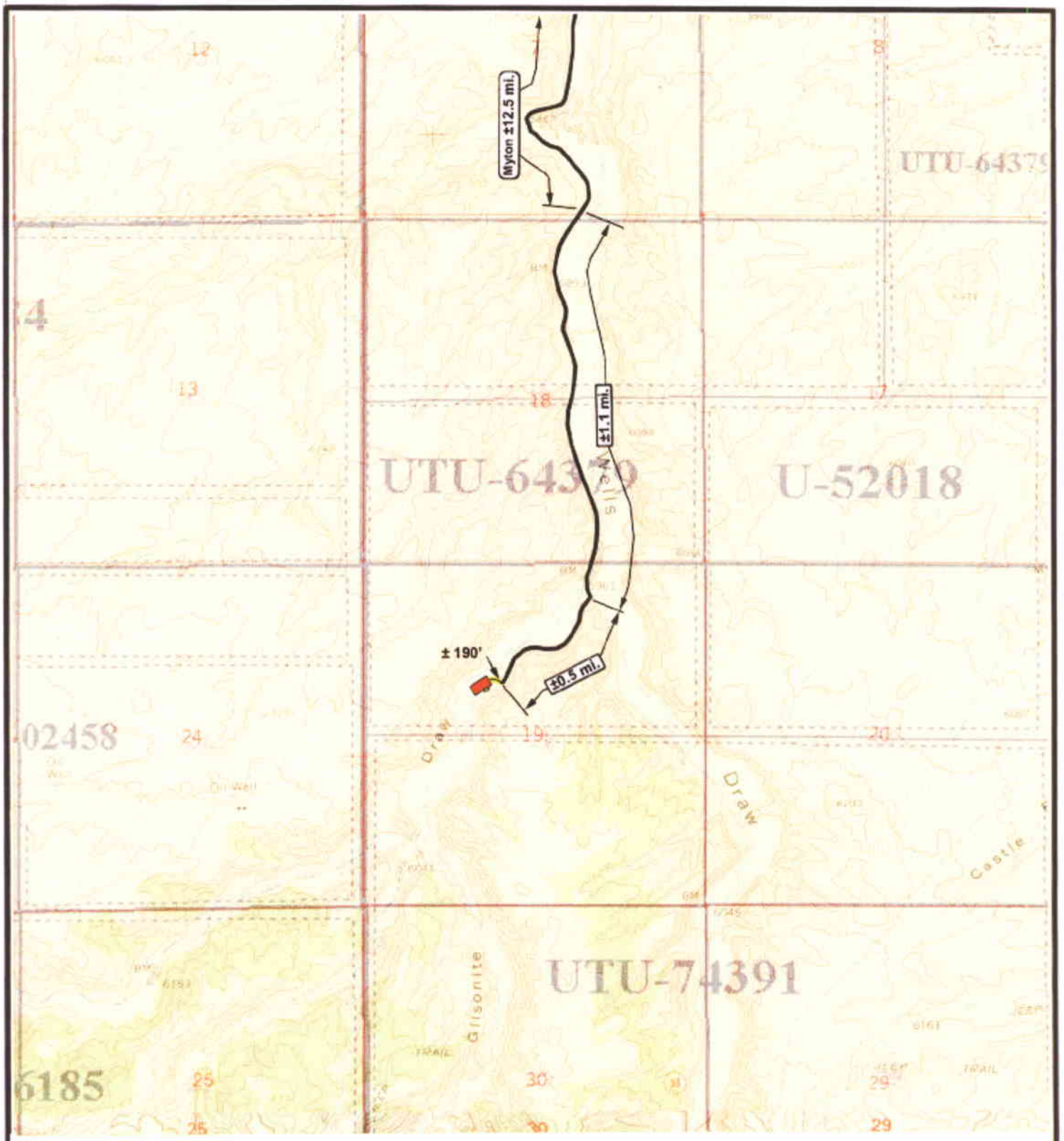

NEWFIELD
Exploration Company

9 Mile 6-19-9-16
SEC. 19, T9S, R16E, S.L.B.&M.

N

Tri-State Land Surveying Inc.
(435) 781-2501
180 North Vernal Ave. Vernal, Utah 84078

SCALE: 1" = 2000'
DRAWN BY: mw
DATE: 02-28-2006

Legend

Existing Road
Proposed Access

TOPOGRAPHIC MAP
"B"

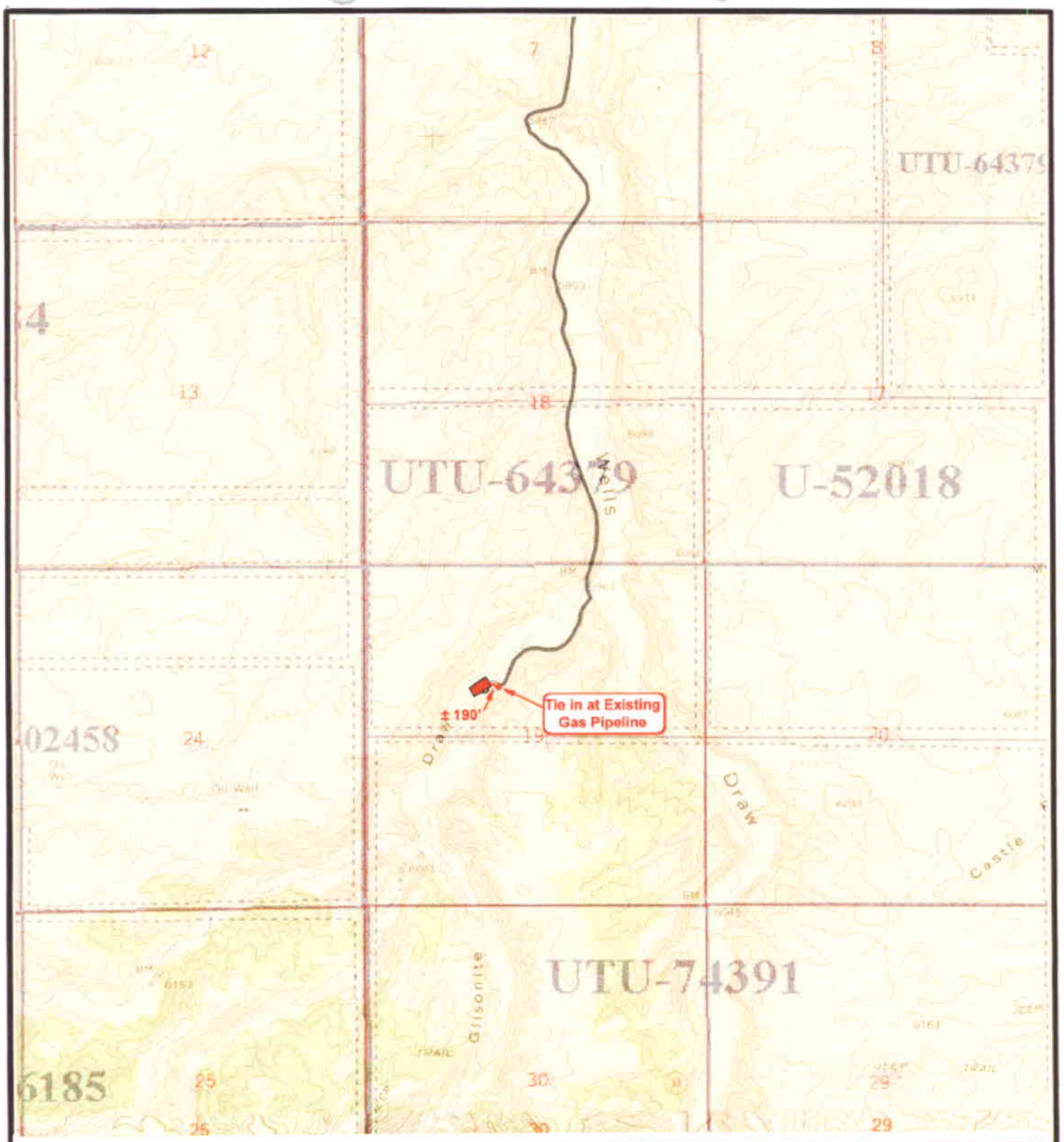

NEWFIELD
Exploration Company

9 Mile 6-19-9-16
SEC. 19, T9S, R16E, S.L.B.&M.

N

Tri-State Land Surveying Inc.
(435) 781-2501
180 North Vernal Ave. Vernal, Utah 84078

SCALE: 1" = 2000'
DRAWN BY: mw
DATE: 02-28-2006

Legend
Roads
Proposed Gas Line

TOPOGRAPHIC MAP
"C"

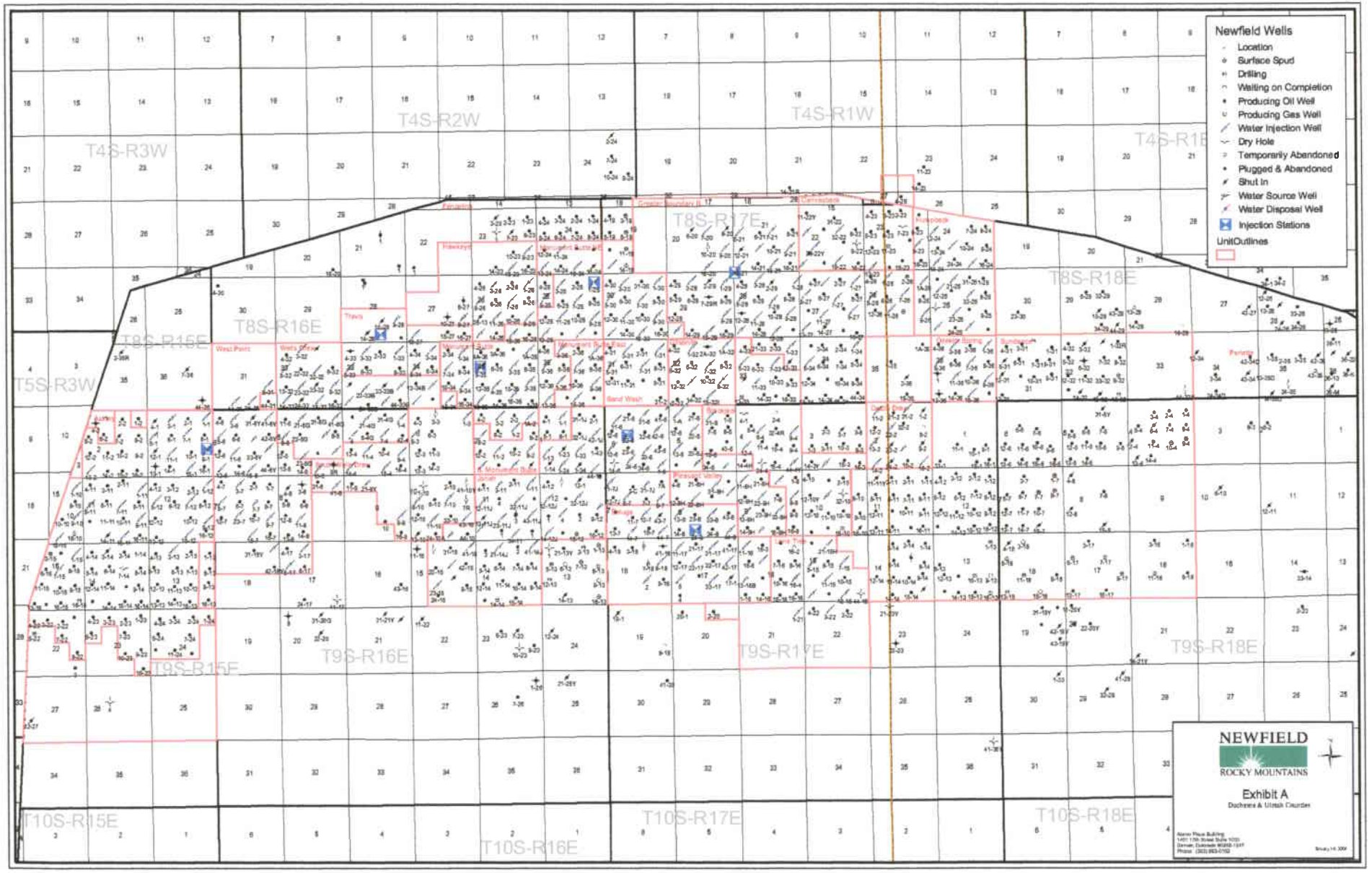
Newfield Wells
Location
Surface Spud
Drilling
Waiting on Completion
Producing Oil Well
Producing Gas Well
Water Injection Well
Dry Hole
Temporarily Abandoned
Plugged & Abandoned
Shut In
Water Source Well
Water Disposal Well
Injection Stations
UnitOutlines
T4S-R3W
T4S-R2W
T4S-R1W
T4S-R1E
T5S-R3W
T8S-R15E
T8S-R16E
T8S-R17E
T8S-R18E
T9S-R15E
T9S-R16E
T9S-R17E
T9S-R18E
T10S-R15E
T10S-R16E
T10S-R17E
T10S-R18E
NEWFIELD
ROCKY MOUNTAINS
Exhibit A
Duchesne & Uintah Counties

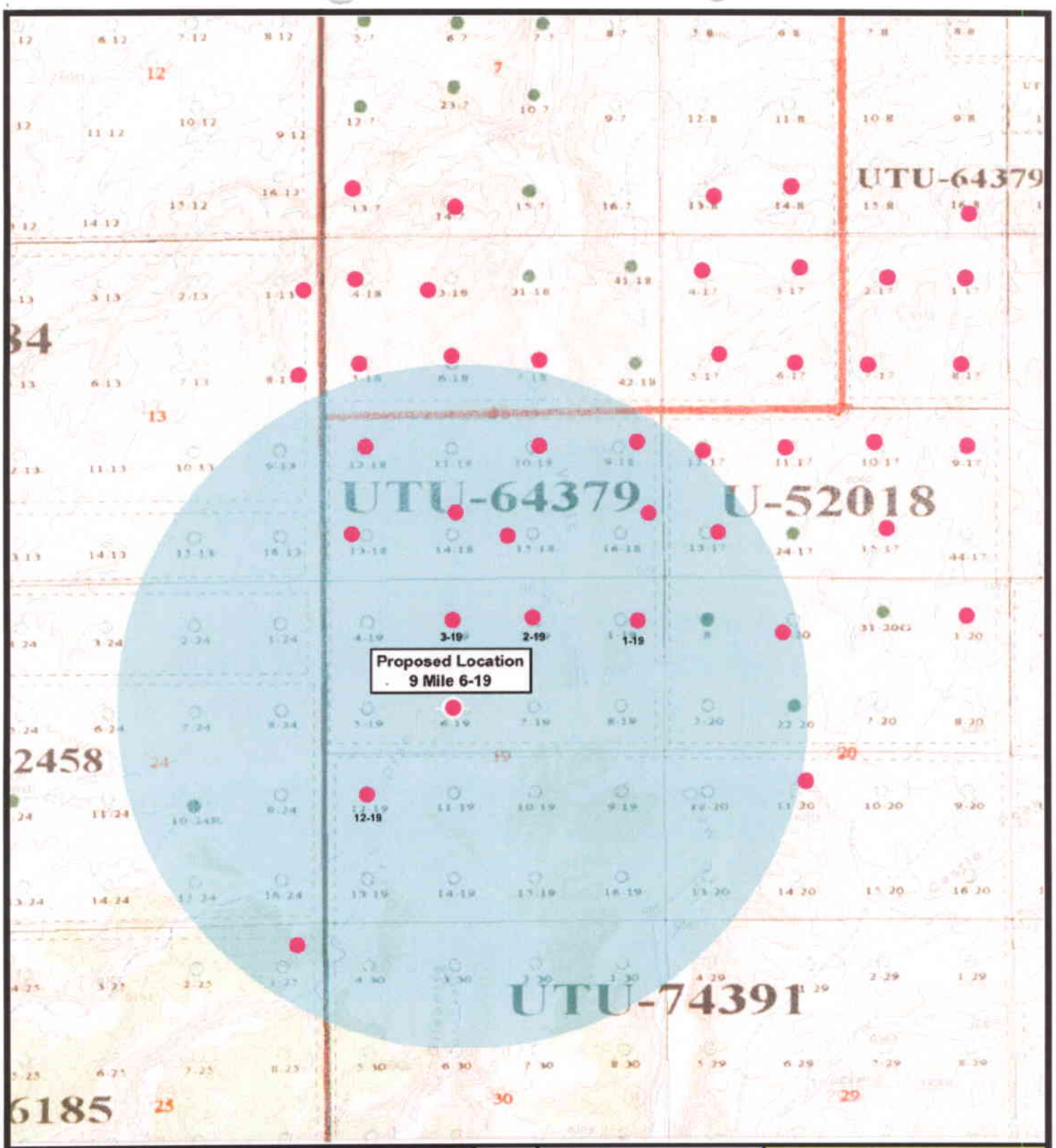

NEWFIELD
Exploration Company

9 Mile 6-19-9-16
SEC. 19, T9S, R16E, S.L.B.&M.

N

Tri-State Land Surveying Inc.
(435) 781-2501
180 North Vernal Ave. Vernal, Utah 84078

SCALE:	1" = 2,000'
DRAWN BY:	mw
DATE:	02-28-2006

Legend

- Well Locations
- One-Mile Radius

Exhibit "B"

2-M SYSTEM

Blowout Prevention Equipment Systems

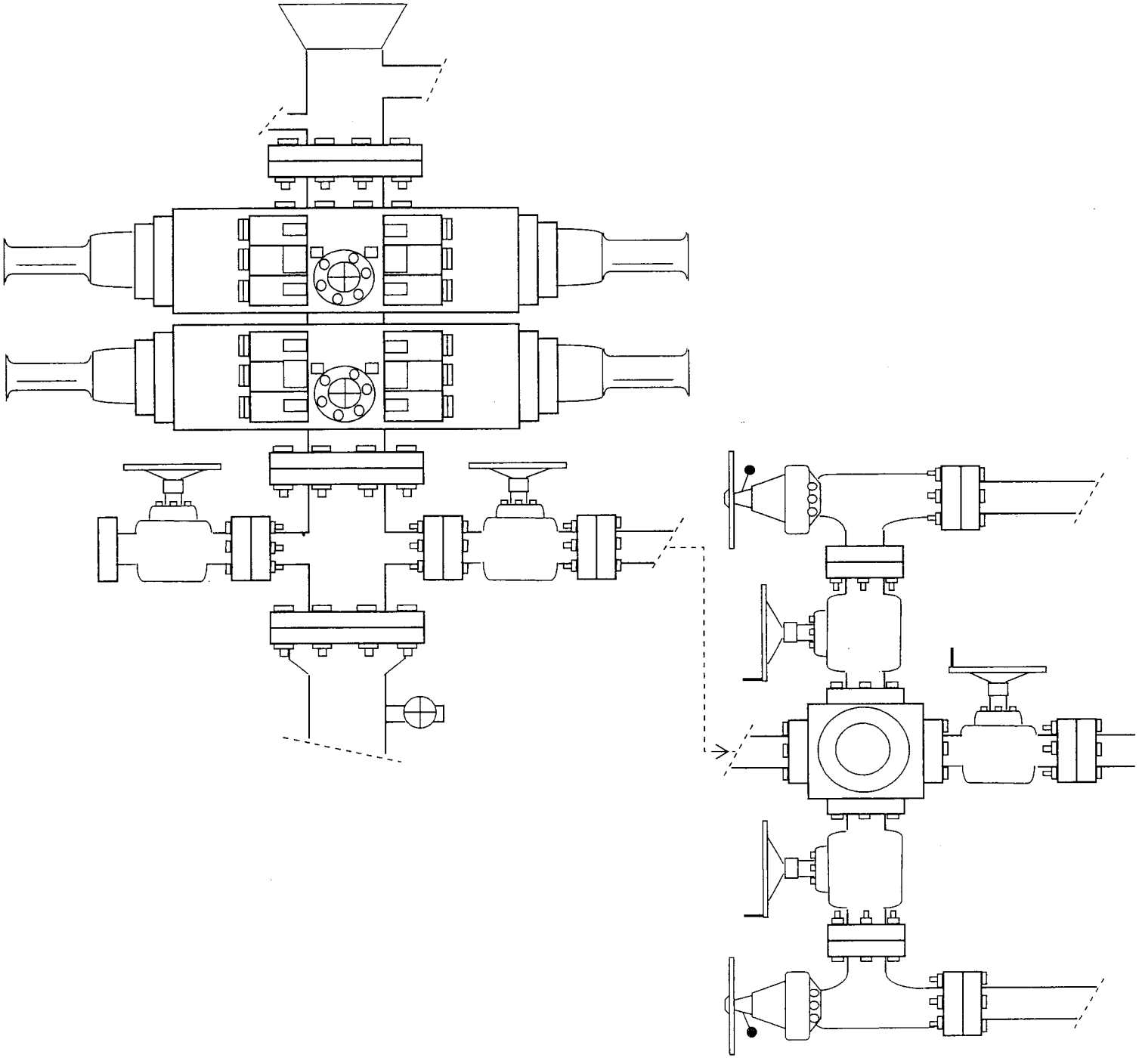

EXHIBIT C

Exhibit "D"
page 1 of 2

CULTURAL RESOURCE INVENTORY OF NEWFIELD EXPLORATION'S BLOCK PARCEL IN TOWNSHIP 9S, RANGE 16E, SECTION 19 AND 20, DUCHESNE COUNTY, UTAH

By:

Shari Maria Silverman

Prepared For:

Bureau fo Land Management
Vernal Field Office

Prepared Under Contract With:

Newfield Exploration Company
Rt. 3 Box 3630
Myton, UT 84052

Prepared By:

Montgomery Archaeological Consultants, Inc.
P.O. Box 147
Moab, Utah 84532

MOAC Report No. 05-225

July 13, 2005

United States Department of Interior (FLPMA)
Permit No. 05-UT-60122

State of Utah Antiquities Project (Survey)
Permit No. U-05-MQ-0668b

NEWFIELD PRODUCTION COMPANY

PALEONTOLOGICAL FIELD SURVEY OF PROPOSED PRODUCTION DEVELOPMENT AREAS, DUCHESNE COUNTY, UTAH

Section 8, T 9 S, R 16 E [SW 1/4 & SE 1/4, NE 1/4; and SE 1/4]; Section 17, T 9 S, R 16 E [NE 1/4; NE 1/4, NW 1/4 & SW 1/4, SE 1/4; NE 1/4, NW 1/4, & SW 1/4, SW 1/4]; Section 19, T 9 S, R 16 E [entire section]; Section 20, T 9 S, R 16 E [excluding NW 1/4, NE 1/4; and NW 1/4 & SE 1/4, NW 1/4]; Section 21, T 9 S, R 16 E [excluding NE 1/4 & NW 1/4, NE 1/4]

REPORT OF SURVEY

Prepared for:

Newfield Production Company

Prepared by:

Wade E. Miller
Consulting Paleontologist
November 10, 2005

WORKSHEET
APPLICATION FOR PERMIT TO DRILL

APD RECEIVED: 03/21/2006

API NO. ASSIGNED: 43-013-33100

WELL NAME: FEDERAL 6-19-9-16
OPERATOR: NEWFIELD PRODUCTION (N2695)
CONTACT: MANDIE CROZIER

PHONE NUMBER: 435-646-3721

PROPOSED LOCATION:
SENW 19 090S 160E
SURFACE: 1941 FNL 1851 FWL
BOTTOM: 1941 FNL 1851 FWL
COUNTY: DUCHESNE
LATITUDE: 40.01841 LONGITUDE: -110.1638
UTM SURF EASTINGS: 571360 NORTHINGS: 4429925
FIELD NAME: MONUMENT BUTTE (105)

INSPECT LOCATN BY: / /

Tech Review	Initials	Date
Engineering		
Geology		
Surface		

LEASE TYPE: 1 - Federal
LEASE NUMBER: UTU-64379
SURFACE OWNER: 1 - Federal

PROPOSED FORMATION: GRRV
COALBED METHANE WELL? NO

RECEIVED AND/OR REVIEWED:

✓ Plat
✓ Bond: Fed[1] Ind[] Sta[] Fee[]
(No. UTB000192)
N Potash (Y/N)
N Oil Shale 190-5 (B) or 190-3 or 190-13
✓ Water Permit
(No. MUNICIPAL)
N RDCC Review (Y/N)
(Date:)
N/A Fee Surf Agreement (Y/N)
N/A Intent to Commingle (Y/N)

LOCATION AND SITING:

___ R649-2-3.
Unit: ___
✓ R649-3-2. General
Siting: 460 From Qtr/Qtr & 920' Between Wells
___ R649-3-3. Exception
___ Drilling Unit
Board Cause No: ___
Eff Date: ___
Siting: ___
___ R649-3-11. Directional Drill

COMMENTS: Sep. Separate file

STIPULATIONS: 1- Federal Approval
2- Spacing Stip

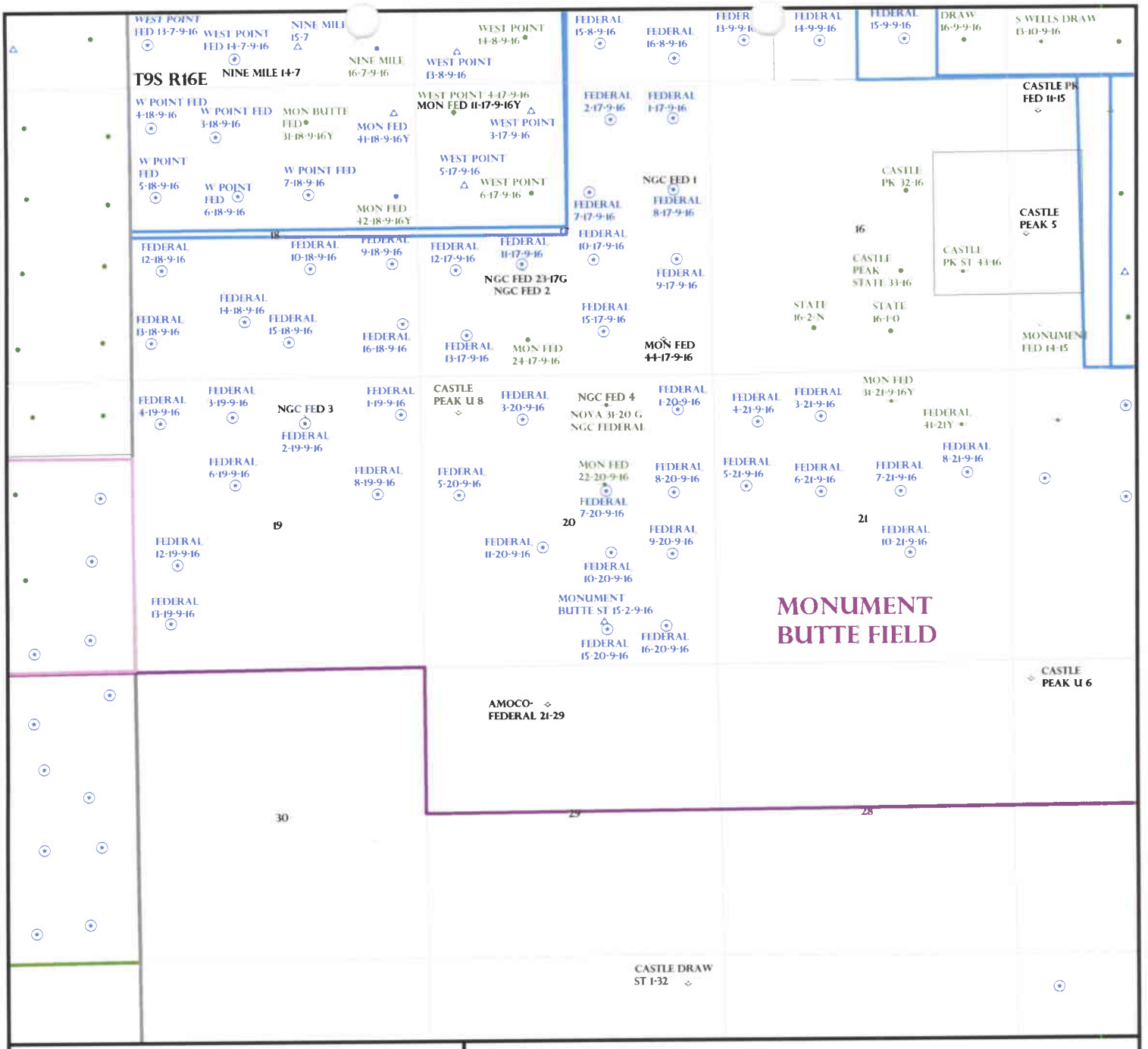

OPERATOR: NEWFIELD PROD CO (N2695)

SEC: 19,20,21 T. 9S R. 16E

FIELD: MONUMENT BUTTE (105)

COUNTY: DUCHESNE

SPACING: R649-3-2 / GENERAL SITING

Utah Oil Gas and Mining

Field Status
- ABANDONED
- ACTIVE
- COMBINED
- INACTIVE
- PROPOSED
- STORAGE
- TERMINATED

Unit Status
- EXPLORATORY
- GAS STORAGE
- NF PP OIL
- NF SECONDARY
- PENDING
- PI OIL
- PP GAS
- PP GEOTHERML
- PP OIL
- SECONDARY
- TERMINATED

Wells Status
- GAS INJECTION
- GAS STORAGE
- LOCATION ABANDONED
- NEW LOCATION
- PLUGGED & ABANDONED
- PRODUCING GAS
- PRODUCING OIL
- SHUT-IN GAS
- SHUT-IN OIL
- TEMP. ABANDONED
- TEST WELL
- WATER INJECTION
- WATER SUPPLY
- WATER DISPOSAL
- DRILLING

N
W E
S

PREPARED BY: DIANA WHITNEY

DATE: 24-MARCH-2006

State of Utah

Department of Natural Resources

MICHAEL R. STYLER
Executive Director

Division of Oil, Gas & Mining

JOHN R. BAZA
Division Director

JON M. HUNTSMAN, JR.
Governor

GARY R. HERBERT
Lieutenant Governor

March 27, 2006

Newfield Production Company
Rt. #3, Box 3630
Myton, UT 84052

Re: Federal 6-19-9-16 Well, 1941' FNL, 1851' FWL, SE NW, Sec. 19, T. 9 South, R. 16 East, Duchesne County, Utah

Gentlemen:

Pursuant to the provisions and requirements of Utah Code Ann.§ 40-6-1 *et seq.*, Utah Administrative Code R649-3-1 *et seq.*, and the attached Conditions of Approval, approval to drill the referenced well is granted.

This approval shall expire one year from the above date unless substantial and continuous operation is underway, or a request for extension is made prior to the expiration date. The API identification number assigned to this well is 43-013-33100.

Sincerely,

Gil Hunt
Associate Director

pab
Enclosures

cc: Duchesne County Assessor
Bureau of Land Management, Vernal District Office

1594 West North Temple, Suite 1210, PO Box 145801, Salt Lake City, UT 84114-5801
telephone (801) 538-5340 • facsimile (801) 359-3940 • TTY (801) 538-7458 • *www.ogm.utah.gov*

Operator: Newfield Production Company

Well Name & Number Federal 6-19-9-16

API Number: 43-013-33100

Lease: UTU-64379

Location: SE NW **Sec.** 19 **T.** 9 South **R.** 16 East

Conditions of Approval

1. General

   Compliance with the requirements of Utah Admin. R. 649-1 *et seq.*, the Oil and Gas Conservation General Rules, and the applicable terms and provisions of the approved Application for permit to drill.

2. Notification Requirements

   Notify the Division within 24 hours of spudding the well.

   - Contact Carol Daniels at (801) 538-5284.

   Notify the Division prior to commencing operations to plug and abandon the well.

   - Contact Dan Jarvis at (801) 538-5338

3. Reporting Requirements

   All required reports, forms and submittals will be promptly filed with the Division, including but not limited to the Entity Action Form (Form 6), Report of Water Encountered During Drilling (Form 7), Weekly Progress Reports for drilling and completion operations, and Sundry Notices and Reports on Wells requesting approval of change of plans or other operational actions.

4. State approval of this well does not supersede the required federal approval, which must be obtained prior to drilling.

5. This proposed well is located in an area for which drilling units (well spacing patterns) have not been established through an order of the Board of Oil, Gas and Mining (the "Board"). In order to avoid the possibility of waste or injury to correlative rights, the operator is requested, once the well has been drilled, completed, and has produced, to analyze geological and engineering data generated therefrom, as well as any similar data from surrounding areas if available. As soon as is practicable after completion of its analysis, and if the analysis suggests an area larger than the quarter-quarter section upon which the well is located is being drained, the operator is requested to seek an appropriate order from the Board establishing drilling and spacing units in conformance with such analysis by filing a Request for Agency Action with the Board.

RECEIVED

MAR 2 1 2006

BLM VERNAL, UTAH

Form 3160-3
(September 2001)

FORM APPROVED
OMB No. 1004-0136
Expires January 31, 2004

UNITED STATES
DEPARTMENT OF THE INTERIOR
BUREAU OF LAND MANAGEMENT

APPLICATION FOR PERMIT TO DRILL OR REENTER

5. Lease Serial No.: UTU-64379

6. If Indian, Allottee or Tribe Name: N/A

1a. Type of Work: [x] DRILL [ ] REENTER

7. If Unit or CA Agreement, Name and No.: N/A

1b. Type of Well: [x] Oil Well [ ] Gas Well [ ] Other [x] Single Zone [ ] Multiple Zone

8. Lease Name and Well No.: Federal 6-19-9-16

2. Name of Operator: Newfield Production Company

9. API Well No.: 43-013-33100

3a. Address: Route #3 Box 3630, Myton UT 84052

3b. Phone No. *(include area code)*: (435) 646-3721

10. Field and Pool, or Exploratory: Monument Butte

4. Location of Well *(Report location clearly and in accordance with any State requirements.*)*
At surface SE/NW 1941' FNL 1851' FWL
At proposed prod. zone

11. Sec., T., R., M., or Blk. and Survey or Area: SE/NW Sec. 19, T9S R16E

14. Distance in miles and direction from nearest town or post office*: Approximatley 14.1 miles southwest of Myton, Utah

12. County or Parish: Duchesne

13. State: UT

15. Distance from proposed* location to nearest property or lease line, ft. (Also to nearest drlg. unit line, if any): Approx. 699' f/lse, NA' f/unit

16. No. of Acres in lease: 1626.36

17. Spacing Unit dedicated to this well: 40 Acres

18. Distance from proposed location* to nearest well, drilling, completed, applied for, on this lease, ft.: Approx. 1291'

19. Proposed Depth: 5800'

20. BLM/BIA Bond No. on file: UTB000192

21. Elevations (Show whether DF, KDB, RT, GL, etc.): 5988' GL

22. Approximate date work will start*: 2nd Quarter 2006

23. Estimated duration: Approximately seven (7) days from spud to rig release.

24. Attachments

The following, completed in accordance with the requirements of Onshore Oil and Gas Order No.1, shall be attached to this form:

1. Well plat certified by a registered surveyor.
2. A Drilling Plan.
3. A Surface Use Plan (if the location is on National Forest System Lands, the SUPO shall be filed with the appropriate Forest Service Office).
4. Bond to cover the operations unless covered by an existing bond on file (see Item 20 above).
5. Operator certification.
6. Such other site specific information and/or plans as may be required by the authorized officer.

25. Signature: Mandie Crozier — Name *(Printed/Typed)*: Mandie Crozier — Date: 3/17/06

Title: Regulatory Specialist

Approved by *(Signature)*: [signature] — Name *(Printed/Typed)*: Jerry Kenczka — Date: 2-15-2007

Title: Assistant Field Manager Lands & Mineral Resources — Office: VERNAL FIELD OFFICE

Application approval does not warrant or certify the the applicant holds legal or equitable title to those rights in the subject lease which would entitle the applicant to conduct operations thereon.
Conditions of approval, if any, are attached.

CONDITIONS OF APPROVAL ATTACHED

Title 18 U.S.C. Section 1001 and Title 43 U.S.C. Section 1212, make it a crime for any person knowingly and willfully to make to any department or agency of the United States any false, fictitious or fraudulent statements or representations as to any matter within its jurisdiction.

*(Instructions on reverse)

RECEIVED

FEB 2 6 2007

DIV. OF OIL, GAS & MINING

NOTICE OF APPROVAL

UDOGM

No NOS

07BM4679A

UNITED STATES DEPARTMENT OF THE INTERIOR
BUREAU OF LAND MANAGEMENT
VERNAL FIELD OFFICE
170 South 500 East VERNAL, UT 84078 (435) 781-4400

CONDITIONS OF APPROVAL FOR APPLICATION FOR PERMIT TO DRILL

Company:	**Newfield Production Company**	**Location:**	**SENW, Sec 19, T9S, R16E**
Well No:	**Federal 6-19-9-16**	**Lease No:**	**UTU-64379**
API No:	**43-013-33100**	**Agreement:**	**N/A**

Petroleum Engineer:	Matt Baker	Office: 435-781-4490	Cell: 435-828-4470
Petroleum Engineer:	Michael Lee	Office: 435-781-4432	Cell: 435-828-7875
Petroleum Engineer:	Jim Ashley	Office: 435-781-4470	Cell: 435-828-7874
Petroleum Engineer:	Ryan Angus	Office: 435-781-4430	
Supervisory Petroleum Technician:	Jamie Sparger	Office: 435-781-4502	Cell: 435-828-3913
Environmental Scientist:	Paul Buhler	Office: 435-781-4475	Cell: 435-828-4029
Environmental Scientist:	Karl Wright	Office: 435-781-4484	
Natural Resource Specialist:	Holly Villa	Office: 435-781-4404	
Natural Resource Specialist:	Melissa Hawk	Office: 435-781-4476	
Natural Resource Specialist:	Chuck Macdonald	Office: 435-781-4441	
Natural Resource Specialist:	Darren Williams	Office: 435-781-4447	
Natural Resource Specialist:	Verlyn Pindell	Office: 435-781-3402	
After Hours Contact Number: 435-781-4513		Fax: 435-781-4410	

A COPY OF THESE CONDITIONS SHALL BE FURNISHED TO YOUR FIELD REPRESENTATIVE TO INSURE COMPLIANCE

All lease and/or unit operations are to be conducted in such a manner that full compliance is made with the applicable laws, regulations (43 CFR Part 3160), and this approved Application for Permit to Drill including Surface and Downhole Conditions of Approval. The operator is considered fully responsible for the actions of his subcontractors. A copy of the approved APD must be on location during construction, drilling, and completion operations. **This permit is approved for a one-year period. An additional year extension may be applied for by sundry notice prior to expiration.**

NOTIFICATION REQUIREMENTS

Location Construction (Notify Chuck Macdonald)	-	Forty-Eight (48) hours prior to construction of location and access roads.
Location Completion (Notify Chuck Macdonald)	-	Prior to moving on the drilling rig.
Spud Notice (Notify Petroleum Engineer)	-	Twenty-Four (24) hours prior to spudding the well.
Casing String & Cementing (Notify Jamie Sparger)	-	Twenty-Four (24) hours prior to running casing and cementing all casing strings.
BOP & Related Equipment Tests (Notify Jamie Sparger)	-	Twenty-Four (24) hours prior to initiating pressure tests.
First Production Notice (Notify Petroleum Engineer)	-	Within Five (5) business days after new well begins or production resumes after well has been off production for more than ninety (90) days.

SURFACE USE PROGRAM
CONDITIONS OF APPROVAL (COAs)

LEASE STIPULATIONS AND NOTICES

- Adhere to Executive Order 5327 of April 15, 1930, stipulations for lands in oil shale withdrawal.

- Lands in this lease have been identified as containing Deer, Elk, and Sage grouse habitats. Modifications to the Surface Use Plan of Operations may be required in order to protect Deer, Elk, and Sage Grouse habitats from surface disturbing activities in accordance with Section 6 of the lease term, Endangered Species Act, and 43 CFR 3101.1-2.

- Timing Limitations (during construction and drilling):

  - From **December 1 through April 30** – in order Deer, Elk, and other Big game winter range habitat.

  - From **March 1 through June 30** – in order to protect Sage Grouse nesting season.

CONDITIONS OF APPROVAL

- This well is being approved in accordance with Washington Instruction Memorandum 2005-247 and Section 390 (Category 3) of the Energy Policy Act which establishes statutory categorical exclusions (CX) under the National Environmental Policy Act (NEPA). Category 3 states that an oil or gas well can be drilled within a developed field for which an approved land use plan or any environmental document prepared pursuant to NEPA analyzed drilling as a reasonably foreseeable activity, so long as such plan or document was approved within five (5) years prior to the date of spudding the well. This well is covered under the *Final Environmental Impact Statement and Record of Decision Castle Peak and Eightmile Flat Oil and Gas Exploration Project Newfield Rocky Mountains Inc.*, signed August 24, 2005. If the well has not been spudded by August 24, 2010, a new environmental document will have to be prepared prior to the approval of the APD.

- All applicable local, state, and/or federal laws, regulations, and/or statutes will be complied with.

- As per Alternative A in 'Environmental Impact Statement and Record of Decision, Castle Peak and Eightmile Flat Oil and Gas Expansion Project Newfield Rocky Mountain Inc.', no wells will be constructed **within 200 feet of a floodplain and stream channels.**

- Right of way (ROW) will not be required.

- All traffic related to this action will be restricted to approved routes. Cross-country vehicle travel will not be allowed.

- No vehicle travel, construction or routine maintenance activities shall be performed during periods when the soil is too wet to adequately support vehicles and/or construction equipment. If

such equipment creates ruts in excess of three inches deep, the soil shall be deemed too wet to adequately support construction equipment.

- The access road will be crowned and ditched. Flat-bladed roads are not allowed.
- If additional erosion occurs during the life of this project, more culverts, low water crossings, berms, wing ditches or etc. will be needed to control the erosion.
- Low-water crossings will be appropriately constructed to avoid sedimentation of drainage ways and other water resources.
- Pipelines will be buried at all major drainage crossings.
- Prevent fill and stock piles from entering drainages.
- The reserve pit will be lined with a 12 ml or greater liner and felt prior to spudding.
- The liner is to be cut 5 feet below ground surface or at the level of the cuttings, whichever is deeper, and the excess liner material is to be disposed of at an authorized disposal site.
- When the reserve pit contains fluids or toxic substances, the operator must ensure animals do not ingest or become entrapped in pit fluids.
- If paleontologic or cultural materials are uncovered during construction, the operator shall immediately stop work that might further disturb or move such materials and contact the Authorized Officer (AO) within 48 hours. A determination will be made by the AO as to necessary mitigation for the discovered paleontologic/cultural material.
- If Uinta Basin hookless cactus or other special status plants are found, construction will cease and the AO will be notified to determine the appropriate mitigation.
- The following seed mix (PLS formula) will be used for interim reclamation:

Crested Wheatgrass (*Agropyron cristatum*)	4 lbs/acre
Needle and Thread Grass (*Stipa comata*)	4 lbs/acre
Indian Rice Grass (*Oryzopsis hymenoides*)	4 lbs/acre

  - Rates are set for drill seeding; double the rate if broadcasting.
  - Reseeding may be required if initial seeding is not successful.

- The operator will be responsible for treatment and control of invasive and noxious weeds.
- The topsoil from the reserve pit shall be stripped and piled separately near the reserve pit. When the reserve pit is closed, it shall be recontoured and the topsoil respread, and the area shall be seeded in the same manner as the location topsoil.

- Once the location is plugged and abandoned, it shall be recontoured to natural topology, topsoil shall be respread, and the entire location shall be seeded with a seed mix recommended by the AO (preferably of native origin). Seed application will follow all guidelines in the interim seed mix bullet statement above. If reclamation seeding should take place using the broadcast method, the seed at a minimum will be walked into the soil with a dozer immediately after the seeding is completed.

- The authorized officer may prohibit surface disturbing activities during severe winter conditions to minimize watershed damage. This limitation does not apply to operation and maintenance of producing wells.

- The authorized officer may prohibit surface disturbing activities during wet or muddy conditions to minimize watershed damage. This limitation does not apply to operation and maintenance of producing wells.

- All well facilities not regulated by OSHA will be painted Carlsbad Canyon.

- All boulders with a length or diameter greater than 3 feet, that are found showing at the surface, will be stockpiled for use during final reclamation.

- Notify the Authorized Officer 48 hours prior to surface disturbing activities.

- Operator shall notify any active gilsonite mining operation within 2 miles of the location 48 hours prior to any blasting during construction for this well.

DOWNHOLE CONDITIONS OF APPROVAL

All provisions outlined in Onshore Oil & Gas Order #2 Drilling Operations shall be strictly adhered to. The following items are emphasized:

SITE SPECIFIC DOWNHOLE CONDITIONS OF APPROVAL

1. A variance is granted for O.O. #2 III. E. 1.
   a. The blooie line shall be straight or have targeted tees for bends in the line.
   b. Not requiring an automatic igniter or continuous pilot on the blooie line.

2. Run a cement bond log from TD to the base of the surface casing shoe.

DRILLING/COMPLETION/PRODUCING OPERATING STANDARDS

1. There shall be no deviation from the proposed drilling, completion, and/or workover program as approved. Safe drilling and operating practices must be observed. All wells, whether drilling, producing, suspended, or abandoned, shall be identified in accordance with 43 CFR 3162.6. There shall be a sign or marker with the name of the operator, lease serial number, well number, and surveyed description of the well. Any changes in operation must have prior approval from the BLM, Vernal Field Office Petroleum Engineers.

2. The spud date and time shall be reported orally to Vernal Field Office within 24 hours of spudding.

3. **Notify Vernal Field Office Supervisory Petroleum Engineering Technician at least 24 hours in advance of casing cementing operations and BOPE & casing pressure tests.**

4. Blowout prevention equipment (BOPE) shall remain in use until the well is completed or abandoned. Closing unit controls shall remain unobstructed and readily accessible at all times. Choke manifolds shall be located outside of the rig substructure.

   All BOPE components shall be inspected daily and those inspections shall be recorded in the daily drilling report. Components shall be operated and tested as required by Onshore Oil & Gas Order No. 2 to insure good mechanical working order. All BOPE pressure tests shall be performed by a test pump with a chart recorder and **NOT** by the rig pumps. Test shall be reported in the driller's log.

   BOP drills shall be initially conducted by each drilling crew within 24 hours of drilling out from under the surface casing and weekly thereafter as specified in Onshore Oil & Gas Order No. 2.

   Casing pressure tests are required before drilling out from under all casing strings set and cemented in place.

   No aggressive/fresh hard-banded drill pipe shall be used within casing.

   Cement baskets shall not be run on surface casing.

5. The lessee/operator must report all shows of water or water-bearing sands to the BLM. If flowing water is encountered it must be sampled and analyzed (a copy of the analyses to be submitted to the BLM Field Office in Vernal, Utah).

6. All oil and gas shows shall be adequately tested for commercial possibilities, reported, and protected.

7. The lessee/operator must report encounters of all non oil and gas mineral resources (such as gilsonite, tar sands, oil shale, etc.) to the Vernal Field Office in writing within 5 working days of each encounter. Each report shall include the well name/number, well location, date and depth (from KB or GL) of encounter, vertical footage of the encounter and, the name of the person making the report (along with a telephone number) should the BLM need to obtain additional information.

8. No location shall be constructed or moved, no well shall be plugged, and no drilling or workover equipment shall be removed from a well to be placed in a suspended status without prior approval of the BLM, Vernal Field Office. If operations are to be suspended for more than 30 days, prior approval of the BLM, Vernal Field Office shall be obtained and notification given before resumption of operations.

9. Chronologic drilling progress reports shall be filed directly with the BLM, Vernal Field Office on a weekly basis in sundry, letter format or e-mail to the Petroleum Engineers until the well is completed.

   Any change in the program shall be approved by the BLM, Vernal Field Office. "Sundry Notices and Reports on Wells" (Form BLM 3160-5) shall be filed for all changes of plans and other operations in accordance with 43 CFR 3162.3-2.

   Emergency approval may be obtained orally, but such approval does not waive the written report requirement. Any additional construction, reconstruction, or alterations of facilities, including roads, gathering lines, batteries, etc., which will result in the disturbance of new ground, shall require the filing of a suitable plan pursuant to Onshore Oil & Gas Order No. 1 of 43 CFR 3164.1 and prior approval by the BLM, Vernal Field Office.

   In accordance with 43 CFR 3162.4-3, this well shall be reported on the "Monthly Report of Operations" (Oil and Gas Operations Report ((OGOR)) starting with the month in which operations commence and continue each month until the well is physically plugged and abandoned. This report shall be filed in duplicate, directly with the Minerals Management Service, P.O. Box 17110, Denver, Colorado 80217-0110, or call 1-800-525-7922 (303) 231-3650 for reporting information.

10. Whether the well is completed as a dry hole or as a producer, "Well Completion and Recompletion Report and Log" (BLM Form 3160-4) shall be submitted not later than 30 days after completion of the well or after completion of operations being performed, in accordance with 43 CFR 3162.4-1. Two copies of all logs run, core descriptions, and all other surveys or data obtained and compiled during the drilling, workover, and/or completion operations, shall be filed on BLM Form 3160-4. Submit with the well completion report a geologic report including, at a minimum, formation tops, and a summary and conclusions. Also include deviation surveys,

sample descriptions, strip logs, core data, drill stem test data, and results of production tests if performed. Samples (cuttings, fluid, and/or gas) shall be submitted only when requested by the BLM, Vernal Field Office.

A cement bond log (CBL) will be run from the production casing shoe to the top of cement and shall be utilized to determine the bond quality for the production casing. Submit a field copy of the CBL to this office.

Please submit an electronic copy of all other logs run on this well in LAS format to UT_VN_Welllogs@BLM.gov. This submission will supersede the requirement for submittal of paper logs to the BLM.

11. All off-lease storage, off-lease measurement, or commingling on-lease or off-lease shall have prior written approval from the BLM, Vernal Field Office.

    All measurement points shall be identified as point of sales or allocation for royalty determination prior to the installation of facilities.

12. Oil and gas meters shall be calibrated in place prior to any deliveries. The Field Office Petroleum Engineers will be provided with a date and time for the initial meter calibration and all future meter proving schedules. A copy of the meter calibration reports shall be submitted to the BLM, Vernal Field Office. All measurement facilities will conform to the API standards for liquid hydrocarbons and the AGA standards for natural gas measurement.

13. A schematic facilities diagram as required by Onshore Oil & Gas Order No. 3 shall be submitted to the BLM, Vernal Field Office within 30 days of installation or first production, whichever occurs first. All site security regulations as specified in Onshore Oil & Gas Order No. 3 shall be adhered to. All product lines entering and leaving hydrocarbon storage tanks will be effectively sealed in accordance with Onshore Oil & Gas Order No. 3.

14. This APD is approved subject to the requirement that, should the well be successfully completed for production, the BLM, Vernal Field office must be notified when it is placed in a producing status. Such notification will be by written communication and must be received in this office by not later than the fifth business day following the date on which the well is placed on production. The notification shall provide, as a minimum, the following informational items:

    a. Operator name, address, and telephone number.

    b. Well name and number.

    c. Well location (¼¼, Sec., Twn, Rng, and P.M.).

    d. Date well was placed in a producing status (date of first production for which royalty will be paid).

    e. The nature of the well's production, (i.e., crude oil, or crude oil and casing head gas, or natural gas and entrained liquid hydrocarbons).

f. The Federal or Indian lease prefix and number on which the well is located; otherwise the non-Federal or non-Indian land category, i.e., State or private.

g. Unit agreement and / or participating area name and number, if applicable.

h. Communitization agreement number, if applicable.

15. Any venting or flaring of gas shall be done in accordance with Notice to Lessees (NTL) 4A and needs prior approval from Field Office Petroleum Engineers.

16. All undesirable events (fires, accidents, blowouts, spills, discharges) as specified in NTL 3A will be reported to the BLM, Vernal Field Office. Major events as defined in NTL3A, shall be reported verbally within 24 hours, followed by a written report within 15 days. "Other than Major Events" will be reported in writing within 15 days. "Minor Events" will be reported on the Monthly Report of Operations and Production

17. Pursuant to Onshore Oil & Gas Order No. 7, this is authorization for pit disposal of water produced from this well for a period of 90 days from the date of initial production. A permanent disposal method must be approved by this office and in operation prior to the end of this 90-day period. In order to meet this deadline, an application for the proposed permanent disposal method shall be submitted along with any necessary water analyses, as soon as possible, but no later than 45 days after the date of first production. Any method of disposal which has not been approved prior to the end of the authorized 90-day period will be considered as an Incident of Noncompliance and will be grounds for issuing a shut-in order until an acceptable manner for disposing of said water is provided and approved by this office.

18. Unless the plugging is to take place immediately upon receipt of oral approval, the Field Office Petroleum Engineers must be notified at least 24 hours in advance of the plugging of the well, in order that a representative may witness plugging operations. If a well is suspended or abandoned, all pits must be fenced immediately until they are backfilled. The "Subsequent Report of Abandonment" (Form BLM 3160-5) must be submitted within 30 days after the actual plugging of the well bore, showing location of plugs, amount of cement in each, and amount of casing left in hole, and the current status of the surface restoration.

FORM 3160-5
(June 1990)

UNITED STATES
DEPARTMENT OF THE INTERIOR
BUREAU OF LAND MANAGEMENT

FORM APPROVED
Budget Bureau No. 1004-0135
Expires: March 31, 1993

SUNDRY NOTICES AND REPORTS ON WELLS

Do not use this form for proposals to drill or to deepen or reentry a different reservoir.
Use "APPLICATION FOR PERMIT -" for such proposals

SUBMIT IN TRIPLICATE

5. Lease Designation and Serial No.
UTU-64379

6. If Indian, Allottee or Tribe Name
NA

7. If Unit or CA, Agreement Designation
NA

1. Type of Well
[X] Oil Well [ ] Gas Well [ ] Other

8. Well Name and No.
FEDERAL 6-19-9-16

9. API Well No.
43-013-33100

2. Name of Operator
NEWFIELD PRODUCTION COMPANY

10. Field and Pool, or Exploratory Area
MONUMENT BUTTE

3. Address and Telephone No.
Rt. 3 Box 3630, Myton Utah, 84052 435-646-3721

11. County or Parish, State
DUCHESNE COUNTY, UT.

4. Location of Well (Footage, Sec., T., R., m., or Survey Description)
1941 FNL 1851 FWL SE/NW Section 19, T9S R16E

12. **CHECK APPROPRIATE BOX(s) TO INDICATE NATURE OF NOTICE, REPORT, OR OTHER DATA**

TYPE OF SUBMISSION	TYPE OF ACTION	
[X] Notice of Intent	[ ] Abandonment	[ ] Change of Plans
[ ] Subsequent Report	[ ] Recompletion	[ ] New Construction
[ ] Final Abandonment Notice	[ ] Plugging Back	[ ] Non-Routine Fracturing
	[ ] Casing Repair	[ ] Water Shut-Off
	[ ] Altering Casing	[ ] Conversion to Injection
	[X] Other **Permit Extension**	[ ] Dispose Water
		(Note: Report results of multiple completion on Well Completion or Recompletion Report and Log form.)

13. Describe Proposed or Completed Operations (Clearly state all pertinent details, and give pertinent dates, including estimated date of starting any proposed work. If well is directionally drilled, give subsurface locations and measured and true vertical depths for all markers and zones pertinent to this work.)*

Newfield Production Company requests to extend the Permit to Drill this well for one year. The original approval date was 3/27/06 (expiration 3/27/07).

Approved by the
Utah Division of
Oil, Gas and Mining

Date: 03-12-07
By: [signature]

3-12-07
RM

RECEIVED
MAR 09 2007
DIV. OF OIL, GAS & MINING

14. I hereby certify that the foregoing is true and correct

Signed [signature] Title Regulatory Specialist Date 3/5/2007
Mandie Crozier

CC: UTAH DOGM

(This space for Federal or State office use)

Approved by _____ Title _____ Date _____

Conditions of approval, if any:

CC: Utah DOGM

Title 18 U.S.C. Section 1001, makes it a crime for any person knowingly and willfully to make to any department or agency of the United States any false, fictitious or fradulent statements or representations as to any matter within its jurisdiction.

Application for Permit to Drill
Request for Permit Extension
Validation
(this form should accompany the Sundry Notice requesting permit extension)

API: 43-013-33100
Well Name: Federal 6-19-9-16
Location: SE/NW Section 19,T9S R16E
Company Permit Issued to: Newfield Production Company
Date Original Permit Issued: 3/27/2006

The undersigned as owner with legal rights to drill on the property as permitted above, hereby verifies that the information as submitted in the previously approved application to drill, remains valid and does not require revision.

Following is a checklist of some items related to the application, which should be verified.

If located on private land, has the ownership changed, if so, has the surface agreement been updated? Yes☐ No☐

Have any wells been drilled in the vicinity of the proposed well which would affect the spacing or siting requirements for this location? Yes☐ No☑

Has there been any unit or other agreements put in place that could affect the permitting or operation of this proposed well? Yes☐ No☑

Have there been any changes to the access route including ownership, or right-of-way, which could affect the proposed location? Yes☐ No☑

Has the approved source of water for drilling changed? Yes☐ No☑

Have there been any physical changes to the surface location or access route which will require a change in plans from what was discussed at the onsite evaluation? Yes☐ No☑

Is bonding still in place, which covers this proposed well? Yes☑ No☐

Signature

3/5/2007
Date

Title: Regulatory Specialist

Representing: Newfield Production Company

RECEIVED
MAR 09 2007
DIV. OF OIL, GAS & MINING

DIVISION OF OIL, GAS AND MINING

SPUDDING INFORMATION

Name of Company: **Newfield Production Company**

Well Name: **Federal 6-19-9-16**

API No: **43-013-33100** Lease Type: **Federal**

Section **19** Township **09S** Range **16E** County **Duchesne**

Drilling Contractor **NDSI** Rig # **NS#1**

SPUDDED:

Date **5-13-07**

Time **10:30 AM**

How **Dry**

Drilling will Commence:

Reported by **Troy**

Telephone # **435-823-6013**

Date 5-14-07 **Signed RM**

STATE OF UTAH
DIVISION OF OIL, GAS AND MINING
ENTITY ACTION FORM -FORM 6

OPERATOR: NEWFIELD PRODUCTION COMPANY
ADDRESS: RT. 3 BOX 3630
MYTON, UT 84052

OPERATOR ACCT. NO. N2695

ACTION CODE	CURRENT ENTITY NO.	NEW ENTITY NO.	API NUMBER	WELL NAME	QQ	SC	TP	RG	COUNTY	SPUD DATE	EFFECTIVE DATE
B	99999	12187	4301333264	Hawkeye FEDERAL I-26-8-16	SENE	26	8S	16E	DUCHESNE	5/11/2007	5/30/07

WELL 1 COMMENTS:
B HL = C NE/4 GRRV

ACTION CODE	CURRENT ENTITY NO.	NEW ENTITY NO.	API NUMBER	WELL NAME	QQ	SC	TP	RG	COUNTY	SPUD DATE	EFFECTIVE DATE
A	99999	16132	4301333100	FEDERAL 6-19-9-16	SENW	19	9S	16E	DUCHESNE	5/13/2007	5/30/07

GRRV

ACTION CODE	CURRENT ENTITY NO.	NEW ENTITY NO.	API NUMBER	WELL NAME	QQ	SC	TP	RG	COUNTY	SPUD DATE	EFFECTIVE
A	99999	16133	4301333148	FEDERAL 13-22-9-16	SWSW	22	9S	16E	DUCHESNE	5/13/2007	5/30/07

GRRV

ACTION CODE	CURRENT ENTITY NO.	NEW ENTITY NO.	API NUMBER	WELL NAME	QQ	SC	TP	RG	COUNTY	SPUD DATE	EFFECTIVE DATE
A	99999	16134	4301333165	FEDERAL 16-21-9-16	SESE	21	9S	16E	DUCHESNE	5/13/2007	5/30/07

GRRV

ACTION CODE	CURRENT ENTITY NO.	NEW ENTITY NO.	API NUMBER	WELL NAME	QQ	SC	TP	RG	COUNTY	SPUD DATE	EFFECTIVE DATE
A	99999	16135	4301333110	FEDERAL 10-21-9-16	NWSE	21	9S	16E	DUCHESNE	5/13/2007	5/30/07

WELL 5 COMMENTS: GRRV

ACTION CODE	CURRENT ENTITY NO.	NEW ENTITY NO.	API NUMBER	WELL NAME	QQ	SC	TP	RG	COUNTY	SPUD DATE	EFFECTIVE DATE
A	99999	16136	4301333149	FEDERAL 11A-22-9-16	NESE	22	9S	16E	DUCHESNE	5/16/2007	5/30/07

WELL 5 COMMENTS:

ACTION CODES (See instructions on back of form)
A - new entity for new well (single well only)
B - well to existing entity (group or unit well)
C - from one existing entity to another existing entity
D - well from one existing entity to a new entity
E - other (explain in comments section)

NOTE: Use COMMENT section to explain why each Action Code was selected.

RECEIVED
MAY 16 2007
DIV. OF OIL, GAS & MINING

Jentri Park
Signature

Production Clerk
April 18, 2007
Date

FORM 3160-5
(September 2001)

UNITED STATES
DEPARTMENT OF THE INTERIOR
BUREAU OF LAND MANAGEMENT

FORM APPROVED
OMB No. 1004-0135
Expires January 31,2004

SUNDRY NOTICES AND REPORTS ON WELLS

Do not use this form for proposals to drill or to re-enter an abandoned well. Use Form 3160-3 (APD) for such proposals.

SUBMIT IN TRIPLICATE - Other instructions on reverse side

5. Lease Serial No.
USA UTU-64379

6. If Indian, Allottee or Tribe Name.

7. If Unit or CA/Agreement, Name and/or

1. Type of Well
☒ Oil Well ☐ Gas Well ☐ Other

8. Well Name and No.
FEDERAL 6-19-9-16

2. Name of Operator
NEWFIELD PRODUCTION COMPANY

9. API Well No.
4301333100

3a. Address Route 3 Box 3630
Myton, UT 84052

3b. Phone *(include are code)*
435.646.3721

10. Field and Pool, or Exploratory Area
MONUMENT BUTTE

4. Location of Well *(Footage, Sec., T., R., M., or Survey Description)*
1941 FNL 1851 FWL

SENW Section 19 T9S R16E

11. County or Parish, State
DUCHESNE, UT

12. CHECK APPROPRIATE BOX(ES) TO INIDICATE NATURE OF NOTICE, OR OTHER DATA

TYPE OF SUBMISSION	TYPE OF ACTION			
☐ Notice of Intent	☐ Acidize	☐ Deepen	☐ Production(Start/Resume)	☐ Water Shut-Off
☒ Subsequent Report	☐ Alter Casing	☐ Fracture Treat	☐ Reclamation	☐ Well Integrity
☐ Final Abandonment	☐ Casing Repair	☐ New Construction	☐ Recomplete	☒ Other Spud Notice
	☐ Change Plans	☐ Plug & Abandon	☐ Temporarily Abandon	
	☐ Convert to	☐ Plug Back	☐ Water Disposal	

13. Describe Proposed or Completed Operation (clearly state all pertinent details, including estimated starting date of any proposed work and approximate duration thereof. If the proposal is to deepen directionally or recomplete horizontally, give subsurface locations and measured and true vertical depths of all pertinent markers and zones. Attach the Bond under which the work will be performed or provide the Bond No. on file with BLM/BIA. Required subsequent reports shall be filed within 30 days following completion of the involved operations. If the operation results in a multiple completion or recompletion in a new interval, a Form 3160-4 shall be filed once testing has been completed. Final Abandonment Notices shall be filed only after all requirements, including reclamation, have been completed, and the operator has determined that the site is ready for final inspection.)

On 5/13/2007 MIRU NDSI NS # 1.Spud well @ 10:30 AM. Drill 320' of 12 1/4" hole with air mist. TIH W/ 7 Jt's 8 5/8" J-55 24 # csgn. Set @ 323.90'/ KB On 5/14/2007 cement with 160 sks of class "G" w/ 2% CaCL2 + 1/4# sk Cello- Flake Mixed @ 15.8 ppg > 1.17 cf/ sk yeild. Returned 3 bbls cement to pit. WOC.

I hereby certify that the foregoing is true and correct *(Printed/ Typed)*
Troy Zufelt

Title
Drilling Supervisor

Signature

Date
05/16/2007

THIS SPACE FOR FEDERAL OR STATE OFFICE USE

Approved by ..... Title ..... Date .....

Conditions of approval, if any, are attached. Approval of this notice does not warrant or certify that the applicant holds legal or equitable title to those rights in the subject lease which would entitle the applicant to conduct operations thereon.

Office

Title 18 U.S.C. Section 1001 and Title 43 U.S.C. Section 1212, make it a crime for any person knowingly and willfully to make to any department or agency of the United States any false, fictitious and fraudulent statements or representations as to any matter within its jurisdiction

(Instructions on reverse)

RECEIVED
MAY 18 2007
DIV. OF OIL, GAS & MINING

NEWFIELD PRODUCTION COMPANY - CASING & CEMENT REPORT

8 5/8 CASING SET AT 323.9

LAST CASING 8 5/8" set @ 323.9
DATUM 12' KB
DATUM TO CUT OFF CASING
DATUM TO BRADENHEAD FLANGE
TD DRILLER 310 LOGGER
HOLE SIZE 12 1/4

OPERATOR Newfield Production Company
WELL Federal 6-19-9-16
FIELD/PROSPECT Monument Butte
CONTRACTOR & RIG # NDSI NS # 1

LOG OF CASING STRING:

PIECES	OD	ITEM - MAKE - DESCRIPTION	WT / FT	GRD	THREAD	CONDT	LENGTH
		Shoe Joint 44.70'					
		WHI - 92 csg head			8rd	A	0.95
7	8 5/8"	Maverick ST&C csg	24#	J-55	8rd	A	312.05
		GUIDE shoe			8rd	A	0.9

CASING INVENTORY BAL.	FEET	JTS
TOTAL LENGTH OF STRING	313.9	7
LESS NON CSG. ITEMS	1.85	
PLUS FULL JTS. LEFT OUT	0	
TOTAL	312.05	7
TOTAL CSG. DEL. (W/O THRDS)	312.05	7
TIMING	1ST STAGE	
BEGIN RUN CSG. Spud	5/13/2007	10:30 AM
CSG. IN HOLE	5/14/2007	5:00 PM
BEGIN CIRC	5/14/2007	7:56 AM
BEGIN PUMP CMT	5/14/2007	9:12 AM
BEGIN DSPL. CMT	5/14/2007	9:32 AM
PLUG DOWN	5/14/2007	9:39 AM

TOTAL LENGTH OF STRING	313.9
LESS CUT OFF PIECE	2
PLUS DATUM TO T/CUT OFF CSG	12
CASING SET DEPTH	323.9

} COMPARE

GOOD CIRC THRU JOB No circ through first 61 bbls
Pumped another 20 bbl gel spacer to gain circulatioon
Bbls CMT CIRC TO SURFACE 3
RECIPROCATED PIPE FOR N/A
BUMPED PLUG TO 526 PSI

CEMENT USED		CEMENT COMPANY- B. J.
STAGE	# SX	CEMENT TYPE & ADDITIVES
1	160	Class "G" w/ 2% CaCL2 + 1/4#/sk Cello-Flake mixed @ 15.8 ppg 1.17 cf/sk yield

CENTRALIZER & SCRATCHER PLACEMENT	SHOW MAKE & SPACING
Centralizers - Middle first, top second & third for 3	

COMPANY REPRESENTATIVE Troy Zufelt DATE 5/14/2007

FORM 3160-5
(September 2001)

UNITED STATES
DEPARTMENT OF THE INTERIOR
BUREAU OF LAND MANAGEMENT

FORM APPROVED
OMB No. 1004-0135
Expires January 31,2004

SUNDRY NOTICES AND REPORTS ON WELLS
Do not use this form for proposals to drill or to re-enter an abandoned well. Use Form 3160-3 (APD) for such proposals.

SUBMIT IN TRIPLICATE - Other Instructions on reverse side

5. Lease Serial No.
USA UTU-64379

6. If Indian, Allottee or Tribe Name.

7. If Unit or CA/Agreement, Name and/or

1. Type of Well
☒ Oil Well ☐ Gas Well ☐ Other

8. Well Name and No.
FEDERAL 6-19-9-16

2. Name of Operator
NEWFIELD PRODUCTION COMPANY

9. API Well No.
4301333100

3a. Address Route 3 Box 3630
Myton, UT 84052

3b. Phone *(include are code)*
435.646.3721

10. Field and Pool, or Exploratory Area
MONUMENT BUTTE

4. Location of Well *(Footage, Sec., T., R., M., or Survey Description)*
1941 FNL 1851 FWL
SENW Section 19 T9S R16E

11. County or Parish, State
DUCHESNE, UT

12. CHECK APPROPRIATE BOX(ES) TO INDICATE NATURE OF NOTICE, OR OTHER DATA

TYPE OF SUBMISSION	TYPE OF ACTION			
☐ Notice of Intent	☐ Acidize	☐ Deepen	☐ Production(Start/Resume)	☐ Water Shut-Off
☒ Subsequent Report	☐ Alter Casing	☐ Fracture Treat	☐ Reclamation	☐ Well Integrity
☐ Final Abandonment	☐ Casing Repair	☐ New Construction	☐ Recomplete	☒ Other Weekly Status Report
	☐ Change Plans	☐ Plug & Abandon	☐ Temporarily Abandon	
	☐ Convert to	☐ Plug Back	☐ Water Disposal	

13. Describe Proposed or Completed Operation (clearly state all pertinent details, including estimated starting date of any proposed work and approximate duration thereof. If the proposal is to deepen directionally or recomplete horizontally, give subsurface locations and measured and true vertical depths of all pertinent markers and zones. Attach the Bond under which the work will be performed or provide the Bond No. on file with BLM/BIA. Required subsequent reports shall be filed within 30 days following completion of the involved operations. If the operation results in a multiple completion or recompletion in a new interval, a Form 3160-4 shall be filed once testing has been completed. Final Abandonment Notices shall be filed only after all requirements, including reclamation, have been completed, and the operator has determined that the site is ready for final inspection.)

On 5/16/07 MIRU Patterson #155. Set all equipment. Pressure test Kelly, TIW, Choke manifold, & Bop's to 2,000 psi. Test 8.625 csgn to 1,500 psi. Vernal BLM field, & Roosevelt DOGM office was notifed of test. PU BHA and tag cement @ 265'. Drill out cement & shoe. Drill a 7.875 hole with fresh water to a depth of 5775'. Lay down drill string & BHA. Open hole log w/ Dig/SP/GR log's TD to surface. PU & TIH with Guide shoe, shoe jt, float collar, 130 jt's of 5.5 J-55, 15.5# csgn. Set @ 5772.04'/ KB. Cement with 300 sks cement mixed @ 11.0 ppg & 3.43 yld. The 425sks cement mixed @ 14.4 ppg & 1.24 yld. Returned 11 bbls of cement to reserve pit. Nipple down Bop's. Drop slips @90,000 #'s tension. Release rig @ 9:00 pm 5/21/07.

RECEIVED
MAY 23 2007
DIV. OF OIL, GAS & MINING

I hereby certify that the foregoing is true and correct *(Printed/ Typed)*
Don Bastian

Title
Drilling Foreman

Signature Don Bastian

Date
05/22/2007

THIS SPACE FOR FEDERAL OR STATE OFFICE USE

Approved by

Title

Date

Conditions of approval, if any, are attached. Approval of this notice does not warrant or certify that the applicant holds legal or equitable title to those rights in the subject lease which would entitle the applicant to conduct operations thereon.

Office

Title 18 U.S.C. Section 1001 and Title 43 U.S.C. Section 1212, make it a crime for any person knowingly and willfully to make to any department or agency of the United States any false, fictitious and fraudulent statements or representations as to any matter within its jurisdiction.

(Instructions on reverse)

NEWFIELD PRODUCTION COMPANY - CASING & CEMENT REPORT

5 1/2" CASING SET AT 5772.04

Flt cllr @ 5726.19'

LAST CASING 8 5/8" SET A 323.90'

OPERATOR Newfield Production Company

DATUM 12' KB

WELL Federal 6-19-9-16

DATUM TO CUT OFF CASING 12'

FIELD/PROSPECT Monument Butte

DATUM TO BRADENHEAD FLANGE

CONTRACTOR & RIG # Patterson #155

TD DRILLER 5775' Loggers 5777'

TVD='

HOLE SIZE 7 7/8"

LOG OF CASING STRING:

PIECES	OD	ITEM - MAKE - DESCRIPTION	WT / FT	GRD	THREAD	CONDT	LENGTH
		Landing Jt					14
		Short jt 4369' (6.00')					
130	**5 1/2"**	ETC LT & C casing	**15.5#**	**J-55**	**8rd**	**A**	5714.19
		Float collar					0.6
1	**5 1/2"**	ETC LT&C csg	**15.5#**	**J-55**	**8rd**	**A**	44.6
		GUIDE shoe			**8rd**	**A**	0.65

CASING INVENTORY BAL.	FEET	JTS
TOTAL LENGTH OF STRING	5774.04	131
LESS NON CSG. ITEMS	15.25	
PLUS FULL JTS. LEFT OUT	246.79	6
TOTAL	**6005.58**	137
TOTAL CSG. DEL. (W/O THRDS)	6005.58	137
TIMING	1ST STAGE	2nd STAGE
BEGIN RUN CSG.	9:00 AM	5/22/2007
CSG. IN HOLE	12:00PM	5/22/2007
BEGIN CIRC	12:30 PM	5/22/2007
BEGIN PUMP CMT	2:40 PM	5/22/2007
BEGIN DSPL. CMT	3:43 PM	5/22/2007
PLUG DOWN	**4:09 PM**	**5/22/2007**

TOTAL LENGTH OF STRING	5774.04
LESS CUT OFF PIECE	14
PLUS DATUM TO T/CUT OFF CSG	12
CASING SET DEPTH	**5772.04**

} COMPARE

GOOD CIRC THRU JOB Yes

Bbls CMT CIRC TO SURFACE 11

RECIPROCATED PIPE FOR THRUSTROKE NA

DID BACK PRES. VALVE HOLD ? Yes

BUMPED PLUG TO 2150 PSI

CEMENT USED		CEMENT COMPANY- **B. J.**
STAGE	# SX	CEMENT TYPE & ADDITIVES
1	**300**	Premlite II w/ 10% gel + 3 % KCL, 3#'s /sk CSE + 2# sk/kolseal + 1/2#'s/sk Cello Flake
		mixed @ 11.0 ppg W / 3.43 cf/sk yield
2	**425**	50/50 poz W/ 2% Gel + 3% KCL, .5%EC1,1/4# sk C.F. 2% gel. 3% SM mixed @ 14.4 ppg W/ 1.24 YLD

CENTRALIZER & SCRATCHER PLACEMENT	SHOW MAKE & SPACING
Centralizers - Middle first, top second & third. Then every third collar for a total of 20.	

COMPANY REPRESENTATIVE Don Bastian DATE **5/22/2007**

RECEIVED
MAY 2 3 2007
DIV. OF OIL, GAS & MINING

FORM 3160-5
(September 2001)

UNITED STATES
DEPARTMENT OF THE INTERIOR
BUREAU OF LAND MANAGEMENT

FORM APPROVED
OMB No. 1004-0135
Expires January 31,2004

SUNDRY NOTICES AND REPORTS ON WELLS

Do not use this form for proposals to drill or to re-enter an abandoned well. Use Form 3160-3 (APD) for such proposals.

5. Lease Serial No.
USA UTU-64379

6. If Indian, Allottee or Tribe Name.

7. If Unit or CA/Agreement, Name and/or

1. Type of Well
☒ Oil Well ☐ Gas Well ☐ Other

8. Well Name and No.
FEDERAL 6-19-9-16

2. Name of Operator
NEWFIELD PRODUCTION COMPANY

9. API Well No.
4301333100

3a. Address Route 3 Box 3630
Myton, UT 84052

3b. Phone *(include are code)*
435.646.3721

10. Field and Pool, or Exploratory Area
MONUMENT BUTTE

4. Location of Well *(Footage, Sec., T., R., M., or Survey Description)*
1941 FNL 1851 FWL
SENW Section 19 T9S R16E

11. County or Parish, State
DUCHESNE, UT

12. CHECK APPROPRIATE BOX(ES) TO INIDICATE NATURE OF NOTICE, OR OTHER DATA

TYPE OF SUBMISSION	TYPE OF ACTION			
☒ Notice of Intent	☐ Acidize	☐ Deepen	☐ Production(Start/Resume)	☐ Water Shut-Off
☐ Subsequent Report	☐ Alter Casing	☐ Fracture Treat	☐ Reclamation	☐ Well Integrity
☐ Final Abandonment	☐ Casing Repair	☐ New Construction	☐ Recomplete	☐ Other _____
	☐ Change Plans	☐ Plug & Abandon	☐ Temporarily Abandon	
	☐ Convert to	☐ Plug Back	☒ Water Disposal	

13. Describe Proposed or Completed Operation (clearly state all pertinent details, including estimated starting date of any proposed work and approximate duration thereof. If the proposal is to deepen directionally or recomplete horizontally, give subsurface locations and measured and true vertical depths of all pertinent markers and zones. Attach the Bond under which the work will be performed or provide the Bond No. on file with BLM/BIA. Required subsequent reports shall be filed within 30 days following completion of the involved operations. If the operation results in a multiple completion or recompletion in a new interval, a Form 3160-4 shall be filed once testing has been completed. Final Abandonment Notices shall be filed only after all requirements, including reclamation, have been completed, and the operator has determined that the site is ready for final inspection.)

Formation water is produced to a steel storage tank. If the production water meets quality guidelines, it is transported to the Ashley, Monument Butte, Jonah, and Beluga water injection facilities by company or contract trucks. Subsequently, the produced water is injected into approved Class II wells to enhance Newfield's secondary recovery project.

Water not meeting quality criteria, is disposed at Newfield's Pariette #4 disposal well (Sec. 7, T9S R19E) or at State of Utah approved surface disposal facilities.

Accepted by the
Utah Division of
Oil, Gas and Mining
FOR RECORD ONLY

RECEIVED
JUN 1 5 2007
DIV. OF OIL, GAS & MINING

I hereby certify that the foregoing is true and correct *(Printed/ Typed)*
Mandie Crozier

Title
Regulatory Specialist

Signature
Mandie Crozier

Date
06/14/2007

Approved by

Title

Date

Conditions of approval, if any, are attached. Approval of this notice does not warrant or certify that the applicant holds legal or equitable title to those rights in the subject lease which would entitle the applicant to conduct operations thereon.

Office

Title 18 U.S.C. Section 1001 and Title 43 U.S.C. Section 1212, make it a crime for any person knowingly and willfully to make to any department or agency of the United States any false, fictitious and fraudulent statements or representations as to any matter within its jurisdiction

(Instructions on reverse)

STATE OF UTAH
DEPARTMENT OF NATURAL RESOURCES
DIVISION OF OIL, GAS AND MINING

5. LEASE DESIGNATION AND SERIAL NUMBER: USA UTU-64379

SUNDRY NOTICES AND REPORTS ON WELLS

6. IF INDIAN, ALLOTTEE OR TRIBE NAME:

Do not use this form for proposals to drill new wells, significantly deepen existing wells below current bottom-hole depth, reenter plugged wells, or to drill horizontal laterals. Use APPLICATION FOR PERMIT TO DRILL form for such proposals.

7. UNIT or CA AGREEMENT NAME:

1. TYPE OF WELL: OIL WELL [X] GAS WELL [ ] OTHER

8. WELL NAME and NUMBER: FEDERAL 6-19-9-16

2. NAME OF OPERATOR: NEWFIELD PRODUCTION COMPANY

9. API NUMBER: 4301333100

3. ADDRESS OF OPERATOR: Route 3 Box 3630 CITY Myton STATE UT ZIP 84052 PHONE NUMBER 435.646.3721

10. FIELD AND POOL, OR WILDCAT: MONUMENT BUTTE

4. LOCATION OF WELL:
FOOTAGES AT SURFACE: 1941 FNL 1851 FWL COUNTY: DUCHESNE
OTR/OTR. SECTION. TOWNSHIP. RANGE. MERIDIAN: SENW, 19, T9S, R16E STATE: UT

11. CHECK APPROPRIATE BOXES TO INDICATE NATURE OF NOTICE, REPORT, OR OTHER DATA

TYPE OF SUBMISSION	TYPE OF ACTION		
[ ] NOTICE OF INTENT (Submit in Duplicate)	[ ] ACIDIZE	[ ] DEEPEN	[ ] REPERFORATE CURRENT FORMATION
Approximate date work will	[ ] ALTER CASING	[ ] FRACTURE TREAT	[ ] SIDETRACK TO REPAIR WELL
	[ ] CASING REPAIR	[ ] NEW CONSTRUCTION	[ ] TEMPORARITLY ABANDON
	[ ] CHANGE TO PREVIOUS PLANS	[ ] OPERATOR CHANGE	[ ] TUBING REPAIR
	[ ] CHANGE TUBING	[ ] PLUG AND ABANDON	[ ] VENT OR FLAIR
[X] SUBSEOUENT REPORT (Submit Original Form Only)	[ ] CHANGE WELL NAME	[ ] PLUG BACK	[ ] WATER DISPOSAL
	[ ] CHANGE WELL STATUS	[ ] PRODUCTION (START/STOP)	[ ] WATER SHUT-OFF
Date of Work Completion:	[ ] COMMINGLE PRODUCING FORMATIONS	[ ] RECLAMATION OF WELL SITE	[X] OTHER: - Weekly Status Report
07/02/2007	[ ] CONVERT WELL TYPE	[ ] RECOMPLETE - DIFFERENT FORMATION	

12. DESCRIBE PROPOSED OR COMPLETED OPERATIONS. Clearly show all pertinent details including dates, depths, volumes, etc.

Status report for time period 5/5/07 – 5/12/07
Subject well had completion procedures initiated in the Green River formation on 05/05/07 without the use of a service rig over the well. A cement bond log was run and a total of four Green River intervals were perforated and hydraulically fracture treated w/ 20/40 mesh sand. Perf intervals were #1 (5412'- 5426'); #2 (5306-5314'); #3 (5238-5254'), (All 4 JSPF); #4 (5099-5107'); #5 (4824'-4834'), 4804'-4812'); #6 (4669'-4675'), 4618'-4635') #7 (4410'-4418') (All 4 JSPF). Composite flow-through frac plugs were used between stages. Fracs were flowed back through chokes. A service rig was moved on well on 5/12/04. Bridge plugs were drilled out. Well was cleaned out to PBTD @ 5726'. Zones were swab tested for sand cleanup. A BHA & production tbg string were run in and anchored in well. End of tubing string @ 5475'. A new 1 1/2" bore rod pump was run in well on sucker rods. Well was placed on production via rod pump on 5/12/07.

NAME (PLEASE PRINT) Jentri Park TITLE Production Clerk

SIGNATURE DATE 07/02/2007

(This space for State use only)

RECEIVED
JUL 1 1 2007

FORM 3160-4
(July 1992)

SUBMIT IN DUPLICATE* (See other instructions ons reverse side)

FORM APPROVED
OMB NO. 1004-0137
Expires: February 28, 1995

UNITED STATES
DEPARTMENT OF THE INTERIOR
BUREAU OF LAND MANAGEMENT

WELL COMPLETION OR RECOMPLETION REPORT AND LOG*

5. LEASE DESIGNATION AND SERIAL NO.: UTU-64379

6. IF INDIAN, ALLOTTEE OR TRIBE NAME: NA

7. UNIT AGREEMENT NAME: Federal

8. FARM OR LEASE NAME, WELL NO.: Federal 6-19-9-16

9. WELL NO.: 43-013-33100

10. FIELD AND POOL OR WILDCAT: Monument Butte

11. SEC., T., R., M., OR BLOCK AND SURVEY OR AREA: Sec. 19, T9S, R16E

1a. TYPE OF WORK: OIL WELL [X] GAS WELL [ ] DRY [ ] Other

1b. TYPE OF WELL: NEW WELL [X] WORK OVER [ ] DEEPEN [ ] PLUG BACK [ ] DIFF RESVR. [ ] Other

2. NAME OF OPERATOR: Newfield Exploration Company

3. ADDRESS AND TELEPHONE NO.: 1401 17th St. Suite 1000 Denver, CO 80202

4. LOCATION OF WELL (Report locations clearly and in accordance with any State requirements.*)
At Surface: 1941' FNL & 1851' FWL (SE/NW) Sec. 19, T9S, R16E
At top prod. Interval reported below
At total depth

14. API NO.: 43-013-33100 | DATE ISSUED: 03/27/07

12. COUNTY OR PARISH: Duchesne | 13. STATE: UT

15. DATE SPUDDED: 05/13/07 | 16. DATE T.D. REACHED: 05/21/07 | 17. DATE COMPL. (Ready to prod.): 06/12/07 | 18. ELEVATIONS (DF, RKB, RT, GR, ETC.)*: 5988' GL 6000' KB | 19. ELEV. CASINGHEAD:

20. TOTAL DEPTH, MD & TVD: 5775' | 21. PLUG BACK T.D., MD & TVD: 5726' | 22. IF MULTIPLE COMPL., HOW MANY*: | 23. INTERVALS DRILLED BY: ------> | ROTARY TOOLS: X | CABLE TOOLS:

24. PRODUCING INTERVAL(S), OF THIS COMPLETION--TOP, BOTTOM, NAME (MD AND TVD)*: Green River 4410'-5426'

25. WAS DIRECTIONAL SURVEY MADE: No

26. TYPE ELECTRIC AND OTHER LOGS RUN: Dual Induction Guard, SP, Compensated Density, Compensated Neutron, GR, Caliper, Cement Bond Log

27. WAS WELL CORED: No

23. CASING RECORD (Report all strings set in well)

CASING SIZE/GRADE	WEIGHT, LB./FT.	DEPTH SET (MD)	HOLE SIZE	TOP OF CEMENT, CEMENTING RECORD	AMOUNT PULLED
8-5/8" - J-55	24#	324'	12-1/4"	To surface with 160 sx Class "G" cmt	
5-1/2" - J-55	15.5#	5772'	7-7/8"	300 sx Premlite II and 425 sx 50/50 Poz	

29. LINER RECORD

SIZE	TOP (MD)	BOTTOM (MD)	SACKS CEMENT*	SCREEN (MD)

30. TUBING RECORD

SIZE	DEPTH SET (MD)	PACKER SET (MD)
2-7/8"	EOT @ 5475'	TA @ 5381'

31. PERFORATION RECORD (Interval, size and number)

INTERVAL	SIZE	SPF/NUMBER
(CP3) 5412'-5426	.49"	4/56
(CP1) 5306'-5314'	.49"	4/32
(LODC) 5238'-5254'	.49"	4/64
(LODC) 5099'-5107'	.49"	4/32
(A3 &1) 4824'-4834', 4804'-4812'	.49"	4/72
(B2 & 1) 4669'-75', 4618'-35'	.49"	4/92
(D1) 4410'-4418'	.49"	4/32

32. ACID, SHOT, FRACTURE, CEMENT SQUEEZE, ETC.

DEPTH INTERVAL (MD)	AMOUNT AND KIND OF MATERIAL USED
5412'-5426'	Frac w/ 34,633# 20/40 sand in 371 bbls fluid
5306'-5314'	Frac w/ 24,825# 20/40 sand in 338 bbls fluid
5238'-5254'	Frac w/ 69,984# 20/40 sand in 557 bbls fluid
5099'-5107'	Frac w/ 44,824# 20/40 sand in 411 bbls fluid
4804'-4834'	Frac w/ 84,070# 20/40 sand in 625 bbls fluid
4618'-4675'	Frac w/ 136,676# 20/40 sand in 945 bbls fluid
4410'-4418'	Frac w/ 36,368# 20/40 sand in 369 bbls fluid

33.* PRODUCTION

DATE FIRST PRODUCTION: 06/12/07 | PRODUCTION METHOD (Flowing, gas lift, pumping--size and type of pump): 2-1/2" x 1-1/2" x 20' RHAC SM Plunger Pump | WELL STATUS (Producing or shut-in): PRODUCING

DATE OF TEST	HOURS TESTED	CHOKE SIZE	PROD'N. FOR TEST PERIOD	OIL--BBLS.	GAS--MCF.	WATER--BBL.	GAS-OIL RATIO
10 day ave			------>	361	80	38	222

FLOW. TUBING PRESS.	CASING PRESSURE	CALCULATED 24-HOUR RATE	OIL-BBL.	GAS--MCF.	WATER--BBL.	OIL GRAVITY-API (CORR.)
		------>				

RECEIVED
JUL 11 2007
DIV. OF OIL, GAS & MINING

34. DISPOSITION OF GAS (Sold, used for fuel, vented, etc.): Sold & Used for Fuel

TEST WITNESSED BY

35. LIST OF ATTACHMENTS

36. I hereby certify that the foregoing and attached information is complete and correct as determined from all available records

SIGNED: Jentri Park | TITLE: Production Clerk | DATE: 7/3/2007

JP

*(See Instructions and Spaces for Additional Data on Reverse Side)

Title 18 U.S.C. Section 1001, makes it a crime for any person knowingly and willfully to make to any department or agency of the United States any false, fictitious or fraudulent statements or representations as to any matter within its jurisdiction.

37. SUMMARY OF POROUS ZONES: (Show all important zones of porosity and contents thereof; cored intervals, and all drill-stem, tests, including depth interval tested, cushion used, time tool open, flowing and shut-in pressures, and recoveries);

FORMATION	TOP	BOTTOM	DESCRIPTION, CONTENTS, ETC.
			Well Name **Federal 6-19-9-16**

38. GEOLOGIC MARKERS

NAME	TOP MEAS. DEPTH	TOP TRUE VERT. DEPTH
Garden Gulch Mkr	3392'	
Garden Gulch 1	3620'	
Garden Gulch 2	3724'	
Point 3 Mkr	3971'	
X Mkr	4234'	
Y-Mkr	4267'	
Douglas Creek Mkr	4377'	
BiCarbonate Mkr	4480'	
B Limestone Mkr	4724'	
Castle Peak	5278'	
Basal Carbonate	5719'	
Total Depth (LOGGERS	5777'	

STATE OF UTAH
DEPARTMENT OF NATURAL RESOURCES
DIVISION OF OIL, GAS, AND MINING

FORM 9

5.LEASE DESIGNATION AND SERIAL NUMBER: UTU-64379

SUNDRY NOTICES AND REPORTS ON WELLS

Do not use this form for proposals to drill new wells, significantly deepen existing wells below current bottom-hole depth, reenter plugged wells, or to drill horizontal laterals. Use APPLICATION FOR PERMIT TO DRILL form for such proposals.

6. IF INDIAN, ALLOTTEE OR TRIBE NAME:

7.UNIT or CA AGREEMENT NAME: GMBU (GRRV)

1. TYPE OF WELL Water Injection Well

8. WELL NAME and NUMBER: FEDERAL 6-19-9-16

2. NAME OF OPERATOR: NEWFIELD PRODUCTION COMPANY

9. API NUMBER: 43013331000000

3. ADDRESS OF OPERATOR: Rt 3 Box 3630 , Myton, UT, 84052

PHONE NUMBER: 435 646-4825 Ext

9. FIELD and POOL or WILDCAT: MONUMENT BUTTE

4. LOCATION OF WELL
FOOTAGES AT SURFACE: 1941 FNL 1851 FWL
QTR/QTR, SECTION, TOWNSHIP, RANGE, MERIDIAN: Qtr/Qtr: SENW Section: 19 Township: 09.0S Range: 16.0E Meridian: S

COUNTY: DUCHESNE

STATE: UTAH

11. CHECK APPROPRIATE BOXES TO INDICATE NATURE OF NOTICE, REPORT, OR OTHER DATA

TYPE OF SUBMISSION

- ☐ NOTICE OF INTENT — Approximate date work will start:
- ✓ SUBSEQUENT REPORT — Date of Work Completion: 6/27/2014
- ☐ SPUD REPORT — Date of Spud:
- ☐ DRILLING REPORT — Report Date:

TYPE OF ACTION

☐ ACIDIZE	☐ ALTER CASING	☐ CASING REPAIR
☐ CHANGE TO PREVIOUS PLANS	☐ CHANGE TUBING	☐ CHANGE WELL NAME
✓ CHANGE WELL STATUS	☐ COMMINGLE PRODUCING FORMATIONS	✓ CONVERT WELL TYPE
☐ DEEPEN	☐ FRACTURE TREAT	☐ NEW CONSTRUCTION
☐ OPERATOR CHANGE	☐ PLUG AND ABANDON	☐ PLUG BACK
☐ PRODUCTION START OR RESUME	☐ RECLAMATION OF WELL SITE	☐ RECOMPLETE DIFFERENT FORMATION
☐ REPERFORATE CURRENT FORMATION	☐ SIDETRACK TO REPAIR WELL	☐ TEMPORARY ABANDON
☐ TUBING REPAIR	☐ VENT OR FLARE	☐ WATER DISPOSAL
☐ WATER SHUTOFF	☐ SI TA STATUS EXTENSION	☐ APD EXTENSION
☐ WILDCAT WELL DETERMINATION	☐ OTHER	OTHER:

12. DESCRIBE PROPOSED OR COMPLETED OPERATIONS. Clearly show all pertinent details including dates, depths, volumes, etc.

The above reference well was put on injection at 11:00 AM on 06/27/2014.

Accepted by the Utah Division of Oil, Gas and Mining
July 21, 2014

Date:
By:

NAME (PLEASE PRINT)	PHONE NUMBER	TITLE
Lucy Chavez-Naupoto	435 646-4874	Water Services Technician

SIGNATURE	DATE
N/A	6/30/2014

RECEIVED: Jun. 30, 2014

GARY R. HERBERT
Governor

SPENCER J. COX
Lieutenant Governor

State of Utah

DEPARTMENT OF NATURAL RESOURCES

MICHAEL R. STYLER
Executive Director

Division of Oil, Gas and Mining

JOHN R. BAZA
Division Director

UNDERGROUND INJECTION CONTROL PERMIT

Cause No. UIC-415.8

Operator: Newfield Production Company

Well: Federal 6-19-9-16

Location: Section 19, Township 9 South, Range 16 East

County: Duchesne

API No.: 43-013-33100

Well Type: Enhanced Recovery (waterflood)

Stipulations of Permit Approval

1. Approval for conversion to Injection Well issued on February 4, 2014.
2. Maximum Allowable Injection Pressure: 1,621 psig
3. Maximum Allowable Injection Rate: (restricted by pressure limitation)
4. Injection Interval: Green River Formation (3,723' – 5,726')
5. Any subsequent wells drilled within a ½ mile radius of this well shall have production casing cement brought up to or above the top of the unitized interval for the Greater Monument Butte Unit.

Approved by: John Rogers
Associate Director

6/26/14
Date

JR/MLR/js
cc: Bruce Suchomel, Environmental Protection Agency
Bureau of Land Management, Vernal
Jill Loyle, Newfield Production Company, Denver
Newfield Production Company, Myton
Duchesne County
Well File
N:\O&G Reviewed Docs\ChronFile\UIC\Newfield

GARY R. HERBERT
Governor

GREGORY S. BELL
Lieutenant Governor

State of Utah

DEPARTMENT OF NATURAL RESOURCES

MICHAEL R. STYLER
Executive Director

Division of Oil, Gas and Mining

JOHN R. BAZA
Division Director

February 4, 2014

Newfield Production Company
1001 Seventeenth Street, Suite 2000
Denver, CO 80202

Subject: Greater Monument Butte Unit Well: Federal 6-19-9-16, Section 19, Township 9 South, Range 16 East, SLBM, Duchesne County, Utah, API Well # 43-013-33100

Ladies and Gentlemen:

Pursuant to Utah Admin. Code R649-5-3-3, the Division of Oil, Gas and Mining (the "Division") issues its administrative approval for conversion of the referenced well to a Class II injection well. Accordingly, the following stipulations shall apply for full compliance with this approval:

1. Compliance with all applicable requirements for the operation, maintenance and reporting for Underground Injection Control ("UIC") Class II injection wells pursuant to Utah Admin. Code R649-1 et seq.

2. Conformance with all conditions and requirements of the complete application submitted by Newfield Production Company.

3. A casing\tubing pressure test shall be conducted prior to commencing injection.

4. Pressure shall be monitored between the surface casing and the production casing on a regular basis. Any pressure changes observed shall be reported to the Division immediately.

5. The top of the injection interval shall be limited to a depth no higher than 3,723 feet in the Federal 6-19-9-16 well.

A final approval to commence injection will be issued upon satisfactory completion of the listed stipulations. If you have any questions regarding this approval or the necessary requirements, please contact Mark Reinbold at 801-538-5333 or Brad Hill at 801-538-5315.

Sincerely,

John Rogers
Associate Director

JR/MLR/js
cc: Bruce Suchomel, Environmental Protection Agency
Bureau of Land Management, Vernal
Duchesne County
Newfield Production Company, Myton
Well File
N:\O&G Reviewed Docs\ChronFile\UIC

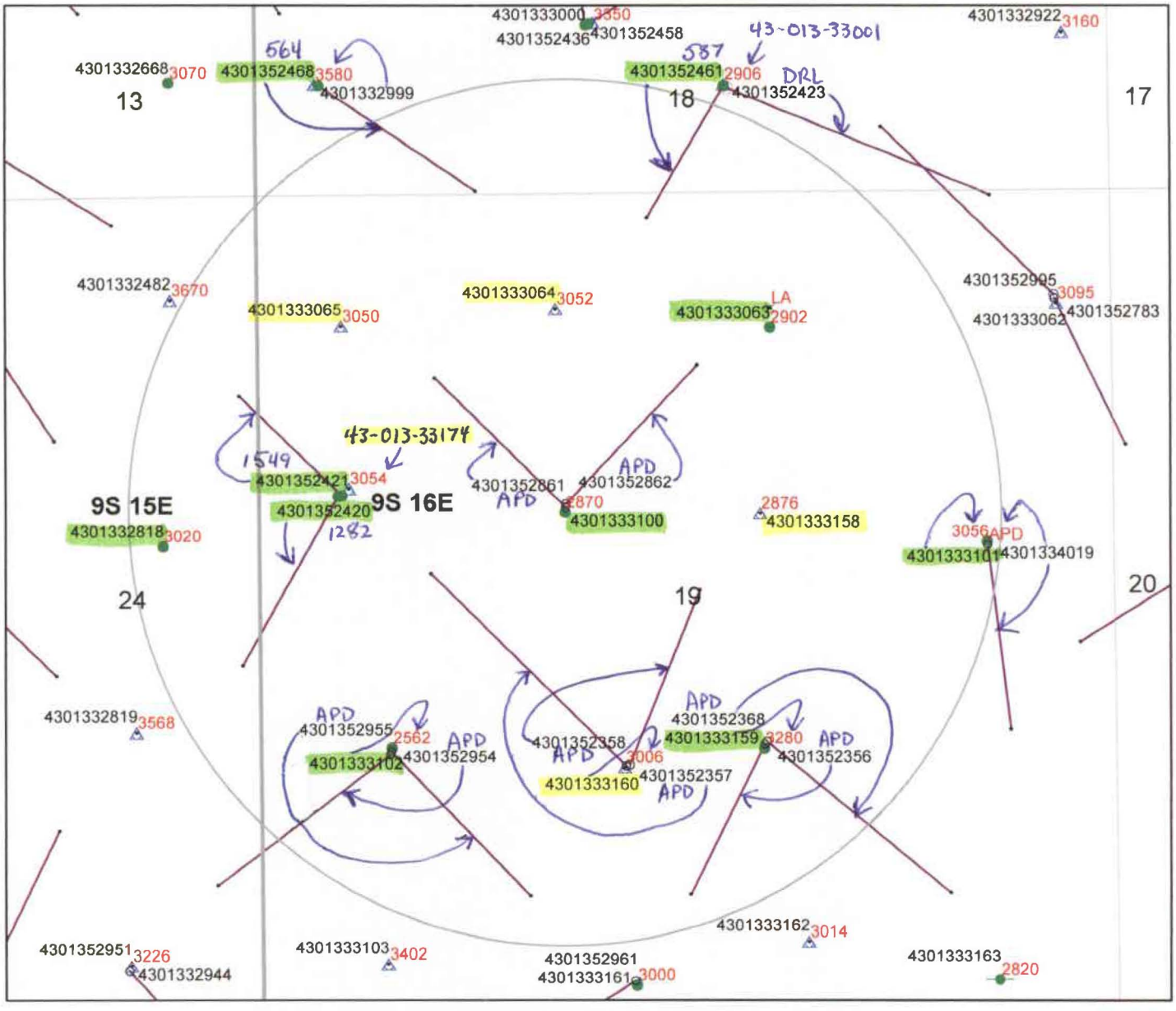

Cement Bond Tops
Federal 6-19-9-16
API #43-013-33100
UIC-415.8

(updated 6/24/2014)

Miles

0 0.05 0.1 0.2 0.3 0.4

N

Legend

Oil & Gas Well Type

- APD-Approved Permit
- DRL-Spudded (Drilling Commenced)
- GIW-Gas Injection Well
- GSW-Gas Storage Well
- LA-Location Abandoned
- LOC-New Location Well
- OPS-Drilling Operations Suspended
- PA-Pugged & Abandoned
- PGW-Producing Gas Well
- POW-Producing Oil Well
- RET-Returned APD
- SGW-Shut-in Gas Well
- SOW-Shut-in Oil Well
- TA-Temp Abandoned
- TW-Test Well
- WDW-Water Disposal Well
- WIW-WaterInjection Well
- WSW-Water Supply Well

4585 Depth to top of suitable cement bond

Well Bottom Hole Location

Oil & Gas Wells Hole Directional Path
Wells-CbltopsMaster 1-31-13

DNR Oil Gas Wells Buffer

County Boundaries

PLSS Sections

PLSS Townships

DIVISION OF OIL, GAS AND MINING
UNDERGROUND INJECTION CONTROL PROGRAM
PERMIT
STATEMENT OF BASIS

Applicant: Newfield Production Company **Well:** Federal 6-19-9-16

Location: 19/9S/16E **API:** 43-013-33100

Ownership Issues: The proposed well is located on BLM land. The well is located in the Greater Monument Butte Unit. Lands in the one-half mile radius of the well are administered by the BLM. The Federal Government is the mineral owner within the area of review (AOR). Newfield and other various individuals hold the leases in the unit. Newfield has provided a list of all surface, mineral and lease holders in the half-mile radius. Newfield is the operator of the Greater Monument Butte Unit. Newfield has submitted an affidavit stating that all owners and interest owners have been notified of their intent.

Well Integrity: The proposed well has surface casing set at 324 feet and has a cement top at the surface. A 5½ inch production casing is set at 5,772 feet. The cement bond log is somewhat problematic but appears to demonstrate adequate bond in this well up to about 2,870 feet or higher. A 2 7/8 inch tubing with a packer will be set at 4,360 feet. Higher perforations may be opened at a later date. A mechanical integrity test will be run on the well prior to injection. At the time of this revision (6/24/2014), based on surface locations, there are 8 producing wells and 5 injection wells in the AOR. Additionally, there are 2 directionally drilled producing wells with surface locations outside the AOR and bottom hole locations inside the AOR. Finally, there are 3 approved surface locations inside the AOR, from which directional wells will be drilled to bottom hole locations outside the AOR. All of the existing wells have evidence of adequate casing and cement for the proposed injection interval.

Ground Water Protection: As interpreted from the Utah Geological Survey's DOE Project-Uinta Basin Water Draft Map (Paul B. Anderson, December 2, 2011), the base of moderately saline water (3000-10,000 mg/l TDS) is at a depth of approximately 2300 feet. Injection shall be limited to the interval between 3,723 feet and 5,726 feet in the Green River Formation. Information submitted by Newfield indicates that the fracture gradient for the 6-19-9-16 well is 0.81 psi/ft., which was the lowest reported fracture gradient for the injection zone. The resulting minimum fracture pressure for the proposed injection interval is 1,621 psig. The requested maximum pressure is 1,621 psig. The anticipated average injection pressure is 1100 psig. Injection at this pressure should not initiate any new fractures or propagate existing fractures in the adjacent confining intervals. Any ground water present should be adequately protected.

Oil/Gas& Other Mineral Resources Protection: The Board of Oil, Gas & Mining approved the Greater Monument Butte Unit on December 1, 2009. Correlative rights issues were addressed at this time. Previous reviews in this area indicate that other mineral resources in the area have been protected or are not at issue.

Bonding: Bonded with the BLM

Actions Taken and Further Approvals Needed: A notice of agency action has been sent to the Salt Lake Tribune and the Uinta Basin Standard. A casing/tubing pressure test will be required prior to injection. It is recommended that approval of this application be granted.

Note: Applicable technical publications concerning water resources in the general vicinity of this project have been reviewed and taken into consideration during the permit review process.

Reviewer(s): Mark Reinbold Date: 2/4/2014 (revised 6/24/2014)

4770 S. 5600 W.
P.O. BOX 704005
WEST VALLEY CITY, UTAH 84170
FED. TAX I.D.# 87-0217663
801-204-6910

The Salt Lake Tribune MEDIA One Deseret News

PROOF OF PUBLICATION CUSTOMER'S COPY

CUSTOMER NAME AND ADDRESS	ACCOUNT NUMBER	DATE
DIV OF OIL-GAS & MINING, Rose Nolton 1594 W NORTH TEMP #1210 P.O. BOX 145801 SALT LAKE CITY, UT 84114	9001402352	12/13/2013

ACCOUNT NAME	
DIV OF OIL-GAS & MINING,	
TELEPHONE	ADORDER
8015385340	0000927358
SCHEDULE	
Start 12/13/2013	End 12/13/
CUST. REF. NO.	
Newfield Cause UIC-415	
CAPTION	
BEFORE THE DIVISION OF OIL, GAS AND MINING DEPARTME	
SIZE	
94 Lines	3.00
TIMES	
3	
MISC. CHARGES	

RECEIVED
DEC 20 2013
DIV. OF OIL, GAS & MINING

BEFORE THE DIVISION OF OIL, GAS AND MINING
DEPARTMENT OF NATURAL RESOURCES
STATE OF UTAH
NOTICE OF AGENCY ACTION CAUSE NO. UIC-415

IN THE MATTER OF THE APPLICATION OF NEWFIELD PRODUCTION COMPANY FOR ADMINISTRATIVE APPROVAL OF CERTAIN WELLS LOCATED IN SECTIONS 16, 17, 18, 19, 20, 21, 23, and 24, TOWNSHIP 9 SOUTH, RANGE 16 EAST, DUCHESNE COUNTY, UTAH, AS CLASS II INJECTION WELLS.

THE STATE OF UTAH TO ALL PERSONS INTERESTED IN THE ABOVE ENTITLED MATTER:

Notice is hereby given that the Division of Oil, Gas and Mining (the "Division") is commencing an informal adjudicative proceeding to consider the application of Newfield Production Company, 1001 17th Street, Suite 2000, Denver, Colorado 80202, telephone 303-893-0102, for administrative approval of the following wells located in Duchesne County, Utah, for conversion to Class II injection wells:

Greater Monument Butte Unit:
State 2-16-9-16 well located in NW/4 NE/4, Section 16, Township 9 South, Range 16 East
API 43-013-33846
State 13-16-9-16 well located in SW/4 SW/4, Section 16, Township 9 South, Range 16 East
API 43-013-33853
Castle Peak 32-16 well located in SW/4 NE/4, Section 16, Township 9 South, Range 16 East
API 43-013-30650
Federal 10-17-9-16 well located in NW/4 SE/4, Section 17, Township 9 South, Range 16 East
API 43-013-33033
Federal 12-17-9-16 well located in NW/4 SW/4, Section 17, Township 9 South, Range 16 East
API 43-013-33035
Federal 16-18-9-16 well located in SE/4 SE/4, Section 18, Township 9 South, Range 16 East
API 43-013-32922
Federal 2-19-9-16 well located in NW/4 NE/4, Section 19, Township 9 South, Range 16 East
API 43-013-33063
Federal 6-19-9-16 well located in SE/4 NW/4, Section 19, Township 9 South, Range 16 East
API 43-013-33100
Federal 12-19-9-16 well located in NW/4 SW/4, Section 19, Township 9 South, Range 16 East
API 43-013-33102
Federal 14-19-9-16 well located in SE/4 SW/4, Section 19, Township 9 South, Range 16 East
API 43-013-33161
Federal 16-19-9-16 well located in SE/4 SE/4, Section 19, Township 9 South, Range 16 East
API 43-013-33163
Federal 8-20-9-16 well located in SE/4 NE/4, Section 20, Township 9 South, Range 16 East
API 43-013-33107
Federal 3-21-9-16 well located in NE/4 NW/4, Section 21, Township 9 South, Range 16 East
API 43-013-33019
Federal 4-21-9-16 well located in NW/4 NW/4, Section 21, Township 9 South, Range 16 East
API 43-013-33069
Federal 8-21-9-16 well located in SE/4 NE/4, Section 21, Township 9 South, Range 16 East
API 43-013-33023
Federal 2-23-9-16 well located in NW/4 NE/4, Section 23, Township 9 South, Range 16 East
API 43-013-33003
Castle Peak Federal 6-23 well located in SE/4 NW/4, Section 23, Township 9 South, Range 16 East
API 43-013-30873
Federal 8-23-9-16 well located in SE/4 NE/4, Section 23, Township 9 South, Range 16 East
API 43-013-32961
Federal 14-24-9-16 well located in SE/4 SW/4, Section 24, Township 9 South, Range 16 East
API 43-013-33343

The proceeding will be conducted in accordance with Utah Admin. R649-10, Administrative Procedures.

Selected zones in the Green River Formation will be used for water injection. The maximum requested injection pressures and rates will be determined based on fracture gradient information submitted by Newfield Production Company.

Any person desiring to object to the application or otherwise intervene in the proceeding, must file a written protest or notice of intervention with the Division within fifteen days following publication of this notice. The Division's Presiding Officer for the proceeding is Brad Hill, Permitting Manager, at P.O. Box 145801, Salt Lake City, UT 84114-5801, phone number (801) 538-5340. If such a protest or notice of intervention is received, a hearing will be scheduled in accordance with the aforementioned administrative procedural rules. Protestants and/or intervenors should be prepared to demonstrate at the hearing how this matter affects their interests.

Dated this 11th day of December, 2013.

STATE OF UTAH
DIVISION OF OIL, GAS & MINING
/s/
Brad Hill
Permitting Manager

923758 UPAXLP

AFFIDAVIT OF PUBLICATION

AS NEWSPAPER AGENCY COMPANY, LLC dba MEDIAONE OF UTAH LEGAL BOOKER, LC
BEFORE THE DIVISION OF OIL, GAS AND MINING DEPARTMENT OF NATURAL RES
CAUSE NO. UIC-415 IN THE MATTER OF THE APPLICA FOR **DIV OF OIL-GAS & MIN**
COMPANY, LLC dba MEDIAONE OF UTAH, AGENT FOR THE SALT LAKE TRIBUNE AND D
ENGLISH LANGUAGE WITH GENERAL CIRCULATION IN UTAH, AND PUBLISHED IN SALT
NOTICE IS ALSO POSTED ON UTAHLEGALS.COM ON THE SAME DAY AS THE FIRST NEWSPAPER PUBLICATION DATE AND REMAINS ON
UTAHLEGALS.COM INDEFINATELY. COMPLIES WITH UTAH DIGITAL SIGNATURE ACT UTAH CODE 46-2-101; 46-3-104.

PUBLISHED ON Start 12/13/2013 End 12/13/2013

SIGNATURE

DATE 12/13/2013

VIRGINIA CRAFT
Notary Public State of Utah
Commission # 581489
My Commission Expires
January 12, 2014

NOTARY SIGNATURE

THIS IS NOT A STATEMENT BUT A "PROOF OF PUBLICATION"
PLEASE PAY FROM BILLING STATEMENT

2210 | R6 8/6 131

AFFIDAVIT OF PUBLICATION

County of Duchesne,
STATE OF UTAH

I, Kevin Ashby on oath, say that I am the PUBLISHER of the Uintah Basin Standard, a weekly newspaper of general circulation, published at Roosevelt, State and County aforesaid, and that a certain notice, a true copy of which is hereto attached, was published in the full issue such newspaper for 1 consecutive issues, and that the first publication was on the 17 day of December, 20 13, and that the last publication of such notice was in the issue of such newspaper dated the 17 day of December, 20 13, and that said notice was published on Utahlegals.com on the same day as the first newspaper publication and the notice remained on Utahlegals.com until the end of the scheduled run.

Kevin Ashby
Publisher

Subscribed and sworn to before me on this 23 day of December, 20 13

by Kevin Ashby.

Bonnie Parrish
Notary Public

Notary Public
BONNIE PARRISH
Commission #653427
My Commission Expires
February 23, 2016
State of Utah

RECEIVED
DEC 24 2013
DIV. OF OIL, GAS & MINING

NOTICE OF AGENCY ACTION CAUSE NO. UIC-415

BEFORE THE DIVISION OF OIL, GAS AND MINING, DEPARTMENT OF NATURAL RESOURCES, STATE OF UTAH.

IN THE MATTER OF THE APPLICATION OF NEWFIELD PRODUCTION COMPANY FOR ADMINISTRATIVE APPROVAL OF CERTAIN WELLS LOCATED IN SECTIONS 16, 17, 18, 19, 20, 21, 23, and 24, TOWNSHIP 9 SOUTH, RANGE 16 EAST, DUCHESNE COUNTY, UTAH, AS CLASS II INJECTION WELLS.

THE STATE OF UTAH TO ALL PERSONS INTERESTED IN THE ABOVE ENTITLED MATTER.

Notice is hereby given that the Division of Oil, Gas and Mining (the "Division") is commencing an informal adjudicative proceeding to consider the application of Newfield Production Company, 1001 17th Street,

Continued on next page

Continued from previous page

Suite 2000, Denver, Colorado 80202, telephone 303-893-0102, for administrative approval of the following wells located in Duchesne County, Utah, for conversion to Class II injection wells:

'Greater Monument Butte Unit:

State 2-16-9-16 well located in NW/4 NE/4, Section 16, Township 9 South, Range 16 East
API 43-013-33846

State 13-16-9-16 well located in SW/4 SW/4, Section 16, Township 9 South, Range 16 East
API 43-013-33853

Castle Peak 32-16 well located in SW/4 NE/4, Section 16, Township 9 South, Range 16 East
API 43-013-30650

Federal 10-17-9-16 well located in NW/4 SE/4, Section 17, Township 9 South, Range 16 East
API 43-013-33033

Federal 12-17-9-16 well located in NW/4 SW/4, Section 17, Township 9 South, Range 16 East
API 43-013-33035

Federal 16-18-9-16 well located in SE/4 SE/4, Section 18, Township 9 South, Range 16 East
API 43-013-32922

Federal 2-19-9-16 well located in NW/4 NE/4, Section 19, Township 9 South, Range 16 East
API 43-013-33063

Federal 6-19-9-16 well located in SE/4 NW/4, Section 19, Township 9 South, Range 16 East
API 43-013-33100

Federal 12-19-9-16 well located in NW/4 SW/4, Section 19, Township 9 South, Range 16 East
API 43-013-33102

Federal 14-19-9-16 well located in SE/4 SW/4, Section 19, Township 9 South,

Any person desi ing to object to tl application or otl erwise intervene the proceeding, mu file a written prote or notice of interve tion with the Divisi within fifteen da following publicati of this notice. The D vision's Presiding C ficer for the proceedi is Brad Hill, Permitti Manager, at P.O. B 145801, Salt Lake Ci UT 84114-5801, pho number (801) 53 5340. If such a prot or notice of interve tion is received, a he ing will be schedul in accordance wi the aforemention administrative pr cedural rules. Prot tants and/or interv ers should be prepa to demonstrate at hearing how this ma affects their interes

Dated this 11th of December, 2013

STATE OF UTA
DIVISION OF O
GAS & MINING
/s/
Brad Hill
Permitting Mana

Published in Uintah Basin Stand December 17, 201

OIL, GAS & MINING

API 43-013-33161
Federal 14-19-9-16 well located in SE/4 SW/4, Section 19, Township 9 South, Range 16 East
API 43-013-33161
Federal 16-19-9-16 well located in SE/4 SE/4, Section 19, Township 9 South, Range 16 East
API 43-013-33163
Federal 8-20-9-16 well located in SE/4 NE/4, Section 20, Township 9 South, Range 16 East
API 43-013-33107
Federal 3-21-9-16 well located in NE/4 NW/4, Section 21, Township 9 South, Range 16 East
API 43-013-33019
Federal 4-21-9-16 well located in NW/4 NW/4, Section 21, Township 9 South, Range 16 East
API 43-013-33069
Federal 8-21-9-16 well located in SE/4 NE/4, Section 21, Township 9 South, Range 16 East
API 43-013-33023
Federal 2-23-9-16 well located in NW/4 NE/4, Section 23, Township 9 South, Range 16 East
API 43-013-33003
Castle Peak Federal 6-23 well located in SE/4 NW/4, Section 23, Township 9 South, Range 16 East
API 43-013-30873
Federal 8-23-9-16 well located in SE/4 NE/4, Section 23, Township 9 South, Range 16 East
API 43-013-32961
Federal 14-24-9-16 well located in SE/4 SW/4, Section 24, Township 9 South, Range 16 East
API 43-013-33343

The proceeding will be conducted in accordance with Utah Admin. R649-10, Administrative Procedures.

Selected zones in the Green River Formation will be used for water injection. The maximum requested injection pressures and rates will be determined based on fracture gradient information submitted by Newfield Production Company.

141

BEFORE THE DIVISION OF OIL, GAS AND MINING
DEPARTMENT OF NATURAL RESOURCES
STATE OF UTAH
NOTICE OF AGENCY ACTION
CAUSE NO. UIC-415

IN THE MATTER OF THE APPLICATION OF NEWFIELD PRODUCTION COMPANY FOR ADMINISTRATIVE APPROVAL OF CERTAIN WELLS LOCATED IN SECTIONS 16, 17, 18, 19, 20, 21, 23, and 24, TOWNSHIP 9 SOUTH, RANGE 16 EAST, DUCHESNE COUNTY, UTAH, AS CLASS II INJECTION WELLS.

THE STATE OF UTAH TO ALL PERSONS INTERESTED IN THE ABOVE ENTITLED MATTER.

Notice is hereby given that the Division of Oil, Gas and Mining (the "Division") is commencing an informal adjudicative proceeding to consider the application of Newfield Production Company, 1001 17th Street, Suite 2000, Denver, Colorado 80202, telephone 303-893-0102, for administrative approval of the following wells located in Duchesne County, Utah, for conversion to Class II injection wells:

Greater Monument Butte Unit:

State 2-16-9-16 well located in NW/4 NE/4, Section 16, Township 9 South, Range 16 East
API 43-013-33846
State 13-16-9-16 well located in SW/4 SW/4, Section 16, Township 9 South, Range 16 East
API 43-013-33853
Castle Peak 32-16 well located in SW/4 NE/4, Section 16, Township 9 South, Range 16 East
API 43-013-30650
Federal 10-17-9-16 well located in NW/4 SE/4, Section 17, Township 9 South, Range 16 East
API 43-013-33033
Federal 12-17-9-16 well located in NW/4 SW/4, Section 17, Township 9 South, Range 16 East
API 43-013-33035
Federal 16-18-9-16 well located in SE/4 SE/4, Section 18, Township 9 South, Range 16 East
API 43-013-32922
Federal 2-19-9-16 well located in NW/4 NE/4, Section 19, Township 9 South, Range 16 East
API 43-013-33063
Federal 6-19-9-16 well located in SE/4 NW/4, Section 19, Township 9 South, Range 16 East
API 43-013-33100
Federal 12-19-9-16 well located in NW/4 SW/4, Section 19, Township 9 South, Range 16 East
API 43-013-33102
Federal 14-19-9-16 well located in SE/4 SW/4, Section 19, Township 9 South, Range 16 East
API 43-013-33161
Federal 16-19-9-16 well located in SE/4 SE/4, Section 19, Township 9 South, Range 16 East
API 43-013-33163
Federal 8-20-9-16 well located in SE/4 NE/4, Section 20, Township 9 South, Range 16 East
API 43-013-33107
Federal 3-21-9-16 well located in NE/4 NW/4, Section 21, Township 9 South, Range 16 East
API 43-013-33019
Federal 4-21-9-16 well located in NW/4 NW/4, Section 21, Township 9 South, Range 16 East
API 43-013-33069
Federal 8-21-9-16 well located in SE/4 NE/4, Section 21, Township 9 South, Range 16 East
API 43-013-33023
Federal 2-23-9-16 well located in NW/4 NE/4, Section 23, Township 9 South, Range 16 East
API 43-013-33003

Castle Peak Federal 6-23 well located in SE/4 NW/4, Section 23, Township 9 South, Range 16 East
API 43-013-30873
Federal 8-23-9-16 well located in SE/4 NE/4, Section 23, Township 9 South, Range 16 East
API 43-013-32961
Federal 14-24-9-16 well located in SE/4 SW/4, Section 24, Township 9 South, Range 16 East
API 43-013-33343

The proceeding will be conducted in accordance with Utah Admin. R649-10, Administrative Procedures.

Selected zones in the Green River Formation will be used for water injection. The maximum requested injection pressures and rates will be determined based on fracture gradient information submitted by Newfield Production Company.

Any person desiring to object to the application or otherwise intervene in the proceeding, must file a written protest or notice of intervention with the Division within fifteen days following publication of this notice. The Division's Presiding Officer for the proceeding is Brad Hill, Permitting Manager, at P.O. Box 145801, Salt Lake City, UT 84114-5801, phone number (801) 538-5340. If such a protest or notice of intervention is received, a hearing will be scheduled in accordance with the aforementioned administrative procedural rules. Protestants and/or interveners should be prepared to demonstrate at the hearing how this matter affects their interests.

Dated this 11th day of December, 2013.

STATE OF UTAH
DIVISION OF OIL, GAS & MINING

Brad Hill
Permitting Manager

Newfield Production Company

STATE 2-16-9-16, STATE 13-16-9-16, CASTLE PEAK 32-16, FEDERAL 10-17-9-16, FEDERAL 12-17-9-16, FEDERAL 16-18-9-16, FEDERAL 2-19-9-16, FEDERAL 6-19-9-16, FEDERAL 12-19-9-16, FEDERAL 14-19-9-16, FEDERAL 16-19-9-16, FEDERAL 8-20-9-16, FEDERAL 3-21-9-16, FEDERAL 4-21-9-16, FEDERAL 8-21-9-16, FEDERAL 2-23-9-16, CASTLE PEAK FEDERAL 6-23, FEDERAL 8-23-9-16, FEDERAL 14-24-9-16

Cause No. UIC-415

Publication Notices were sent to the following:

Newfield Production Company
1001 17th Street, Suite 2000
Denver, CO 80202

Uintah Basin Standard
268 South 200 East
Roosevelt, UT 84066
via e-mail ubs@ubstandard.com

Salt Lake Tribune
P O Box 45838
Salt Lake City, UT 84145
via e-mail naclegal@mediaoneutah.com

Vernal Office
Bureau of Land Management
170 South 500 East
Vernal, UT 84078

SITLA
675 E 500 S Ste 500
Salt Lake City, UT 84102-2818

Duchesne County Planning
P O Box 317
Duchesne, UT 84021-0317

Bruce Suchomel
US EPA Region 8
MS 8P-W-GW
1595 Wynkoop Street
Denver, CO 80202-1129

Newfield Production Company
Rt 3 Box 3630
Myton, UT 84052

Jan Sweet

GARY R. HERBERT
Governor

SPENCER J. COX
Lieutenant Governor

State of Utah
DEPARTMENT OF NATURAL RESOURCES

MICHAEL R. STYLER
Executive Director

Division of Oil, Gas and Mining

JOHN R. BAZA
Division Director

December 12, 2013

Via e-mail: legals@ubstandard.com

Uintah Basin Standard
268 South 200 East
Roosevelt, UT 84066

Subject: Notice of Agency Action – Newfield Production Company Cause No. UIC-415

To Whom It May Concern:

Enclosed is a copy of the referenced Notice of Agency Action. Please publish the Notice, once only, as soon as possible. Please notify me via e-mail of the date it will be published. My e-mail address is: jsweet@utah.gov.

Please send proof of publication and billing to:

Division of Oil, Gas and Mining
PO Box 145801
Salt Lake City, UT 84114-5801

Sincerely,

Jean Sweet

Jean Sweet
Executive Secretary

Enclosure

[redacted]

Jean Sweet <jsweet@utah.gov>

Re: Notice of Agency Action – Newfield Production Company Cause No. UIC-415

1 message

UB Standard Legals <ubslegals@ubmedia.biz> Thu, Dec 12, 2013 at 1:22 PM
To: Jean Sweet <jsweet@utah.gov>

On 12/12/2013 11:59 AM, Jean Sweet wrote:

> Enclosed is a copy of the referenced Notice of Agency Action. Please publish the Notice, once only, as soon as possible. Please notify me via e-mail of the date it will be published. My e-mail address is: jsweet@utah.gov.

> Please send proof of publication and billing to:
>
> Division of Oil, Gas and Mining
>
> PO Box 145801
>
> Salt Lake City, UT 84114-5801
>
> Sincerely,
>
> Jean
> –
> Jean Sweet
> Executive Secretary
> Utah Division of Oil, Gas and Mining
> 801-538-5329

This will publish Dec. 17. Thank you. Merry Christmas.
Cindy

GARY R. HERBERT
Governor

SPENCER J. COX
Lieutenant Governor

State of Utah
DEPARTMENT OF NATURAL RESOURCES

MICHAEL R. STYLER
Executive Director

Division of Oil, Gas and Mining

JOHN R. BAZA
Division Director

December 12, 2013

VIA E-MAIL naclegal@mediaoneutah.com

Salt Lake Tribune
P. O. Box 45838
Salt Lake City, UT 84145

Subject: Notice of Agency Action – Newfield Production Company Cause No. UIC-415

To Whom It May Concern:

Enclosed is a copy of the referenced Notice of Agency Action. Please publish the Notice, once only, as soon as possible. Please notify me via e-mail of the date it will be published. My e-mail address is: jsweet@utah.gov.

Please send proof of publication and billing for **account #9001402352** to:

Division of Oil, Gas and Mining
PO Box 145801
Salt Lake City, UT 84114-5801

Sincerely,

Jean Sweet

Jean Sweet
Executive Secretary

Enclosure

[redacted]

Jean Sweet <jsweet@utah.gov>

Proof for Notice

1 message

Stowe, Ken <naclegal@mediaoneutah.com> Thu, Dec 12, 2013 at 12:34 PM
Reply-To: "Stowe, Ken" <naclegal@mediaoneutah.com>
To: jsweet@utah.gov

AD# 927358
Run SL Trib & Des News 12/13
Cost $478.76
Thank You

OrderConf.pdf
185K

The Salt Lake Tribune MEDIAone Deseret News

Remit to: P.O. Box 704005
West Valley City, UT 84170

Order Confirmation for Ad #0000927358-01

Client	DIV OF OIL-GAS & MINING	**Payor Customer**	DIV OF OIL-GAS & MINING
Client Phone	801-538-5340	**Payor Phone**	801-538-5340
Account#	9001402352	**Payor Account**	9001402352
Address	1594 W NORTH TEMP #1210,P.O. BOX 145801 SALT LAKE CITY, UT 84114 USA	**Payor Address**	1594 W NORTH TEMP #1210,P.O. BO) SALT LAKE CITY, UT 84114
Fax	801-359-3940	**Ordered By**	**Acct. Exec**
EMail	juliecarter@utah.gov	Jean	kstowe

Total Amount	**$478.76**			
Payment Amt	**$0.00**	**Tear Sheets**	**Proofs**	**Affidavits**
Amount Due	**$478.76**	0	0	1

Payment Method **PO Number** Newfield Cause UIC-4

Confirmation Notes:

Text: Jean

Ad Type	Ad Size	Color
Legal Liner	3.0 X 94 Li	<NONE>

Product	Placement	Position
Salt Lake Tribune::	Legal Liner Notice - 0998	998-Other Legal Notices
Scheduled Date(s):	12/13/2013	
Product	**Placement**	**Position**
Deseret News::	Legal Liner Notice - 0998	998-Other Legal Notices
Scheduled Date(s):	12/13/2013	
Product	**Placement**	**Position**
utahlegals.com::	utahlegals.com	utahlegals.com
Scheduled Date(s):	12/13/2013	

Order Confirmation for Ad #0000927358-01

Ad Content Proof Actual Size

NEWFIELD

Newfield Exploration Company
1001 17th Street | Suite 2000
Denver, Colorado 80202
PH 303-893-0102 | FAX 303-893-0103

December 5, 2013

Mr. Mark Reinbold
State of Utah
Division of Oil, Gas and Mining
1594 W North Temple
Salt Lake City, Utah 84114-5801

RE: Permit Application for Water Injection Well
Federal #6-19-9-16
Monument Butte Field, Lease #UTU-64379
Section 19-Township 9S-Range 16E
Duchesne County, Utah

Dear Mr. Reinbold:

Newfield Production Company herein requests approval to convert the Federal #6-19-9-16 from a producing oil well to a water injection well in the Monument Butte (Green River) Field.

I hope you find this application complete; however, if you have any questions or require additional information, please contact me at (303) 893-0102.

Sincerely,

Jill L Loyle
Regulatory Associate

RECEIVED
DEC 06 2013
DIV. OF OIL, GAS & MINING

NEWFIELD PRODUCTION COMPANY

APPLICATION FOR APPROVAL OF CLASS II INJECTION WELL

FEDERAL #6-19-9-16

MONUMENT BUTTE FIELD (GREEN RIVER) FIELD

LEASE #UTU-64379

DECEMBER 5, 2013

TABLE OF CONTENTS

LETTER OF INTENT
COVER PAGE
TABLE OF CONTENTS
UIC FORM 1 – APPLICATION FOR INJECTION WELL
WELLBORE DIAGRAM OF PROPOSED INJECTION
WORK PROCEDURE FOR INJECTION CONVERSION
COMPLETED RULE R615-5-1 QUESTIONNAIRE
COMPLETED RULE R615-5-2 QUESTIONNAIRE

ATTACHMENT A	ONE-HALF MILE RADIUS MAP
ATTACHMENT A-1	WELL LOCATION PLAT
ATTACHMENT B	LIST OF SURFACE OWNERS WITHIN ONE-HALF MILE RADIUS
ATTACHMENT C	CERTIFICATION FOR SURFACE OWNER NOTIFICATION
ATTACHMENT E	WELLBORE DIAGRAM – FEDERAL #6-19-9-16
ATTACHMENT E-1	WELLBORE DIAGRAM – FEDERAL #4-19-9-16
ATTACHMENT E-2	WELLBORE DIAGRAM – FEDERAL #5-19-9-16
ATTACHMENT E-3	WELLBORE DIAGRAM – FEDERAL #15-18-9-16
ATTACHMENT E-4	WELLBORE DIAGRAM – FEDERAL #2-19-9--16
ATTACHMENT E-5	WELLBORE DIAGRAM – FEDERAL #3-19-9-16
ATTACHMENT E-6	WELLBORE DIAGRAM – FEDERAL #7-19-9-16
ATTACHMENT E-7	WELLBORE DIAGRAM – FEDERAL #8-19-9-16
ATTACHMENT E-8	WELLBORE DIAGRAM – FEDERAL #10-19-9-16
ATTACHMENT E-9	WELLBORE DIAGRAM – FEDERAL #11-19-9-16
ATTACHMENT E-10	WELLBORE DIAGRAM – FEDERAL #12-19-9-16
ATTACHMENT E-11	WELLBORE DIAGRAM – FEDERAL #1-24-9-16
ATTACHMENT E-12	WELLBORE DIAGRAM – ASHLEY FEDERAL #8-24-9-15
ATTACHMENT F	WATER ANALYSIS
ATTACHMENT G	FRACTURE GRADIENT CALCULATIONS
ATTACHMENT G-1	FRACTURE REPORTS DATED – *6/6/2007 – 6/13/2007*
ATTACHMENT H	WORK PROCEDURE FOR PROPOSED PLUG AND ABANDON
ATTACHMENT H-1	WELLBORE DIAGRAM OF PROPOSED PLUGGED WELL

STATE OF UTAH
DIVISION OF OIL, GAS AND MINING

APPLICATION FOR INJECTION WELL - UIC FORM 1

OPERATOR Newfield Production Company
ADDRESS 1001 17th Street, Suite 2000
Denver, Colorado 80202

Well Name and number: Federal #6-19-9-16
Field or Unit name: Monument Butte (Green River) Lease No. UTU-64379
Well Location: QQ SENW section 19 township 9S range 16E county Duchesne

Is this application for expansion of an existing project? ..... Yes [X] No [ ]
Will the proposed well be used for: Enhanced Recovery? ..... Yes [X] No [ ]
Disposal? ..... Yes [ ] No [X]
Storage? ..... Yes [ ] No [X]
Is this application for a new well to be drilled? ..... Yes [ ] No [X]
If this application is for an existing well,
has a casing test been performed on the well?..... Yes [ ] No [X]
Date of test:
API number: 43-013-33100

Proposed injection interval: from 3723 to 5726
Proposed maximum injection: rate 500 bpd pressure 1621 psig
Proposed injection zone contains [x] oil, [ ] gas, and/or [ ] fresh water within 1/2 mile of the well.

IMPORTANT: Additional information as required by R615-5-2 should accompany this form.

List of Attachments: Attachments "A" through "H-1"

I certify that this report is true and complete to the best of my knowledge.

Name: Jill L Loyle Signature Jill L Loyle
Title Regulatory Associate Date 12/5/13
Phone No. 303-383-4135

(State use only)
Application approved by Title
Approval Date

Comments:

FEDERAL 6-19-9-16

Spud Date: 05/13/07
Put on Production: 06/12/07

GL: 5988' KB: 6000'

Proposed Injection
Wellbore Diagram

Initial Production: BOPD,
MCFD, BWPD

SURFACE CASING

CSG SIZE: 8-5/8"

GRADE: J-55

WEIGHT: 24#

LENGTH: 7 jts. (312.05')

DEPTH LANDED: 323.90' KB

HOLE SIZE:12-1/4"

CEMENT DATA: 160 sxs Class "G" cmt, est 3 bbls cmt to surf.

PRODUCTION CASING

CSG SIZE: 5-1/2"

GRADE: J-55

WEIGHT: 15.5#

LENGTH: 131 jts. (5758.79')

DEPTH LANDED: 5772.04' KB

HOLE SIZE: 7-7/8"

CEMENT DATA: 300 sxs Prem. Lite II mixed & 425 sxs 50/50 POZ.

CEMENT TOP: 74'

TUBING

SIZE/GRADE/WT.: 2-7/8" / J-55 / 6.5#

NO. OF JOINTS: 173 jts (5368.53')

TUBING ANCHOR: 5380.53' KB

NO. OF JOINTS: 1 jts (29.45')

SEATING NIPPLE: 2-7/8" (1.10')

SN LANDED AT: 5412.78' KB

NO. OF JOINTS: 2 jts (60.64')

TOTAL STRING LENGTH: EOT @ 5474.97' KB

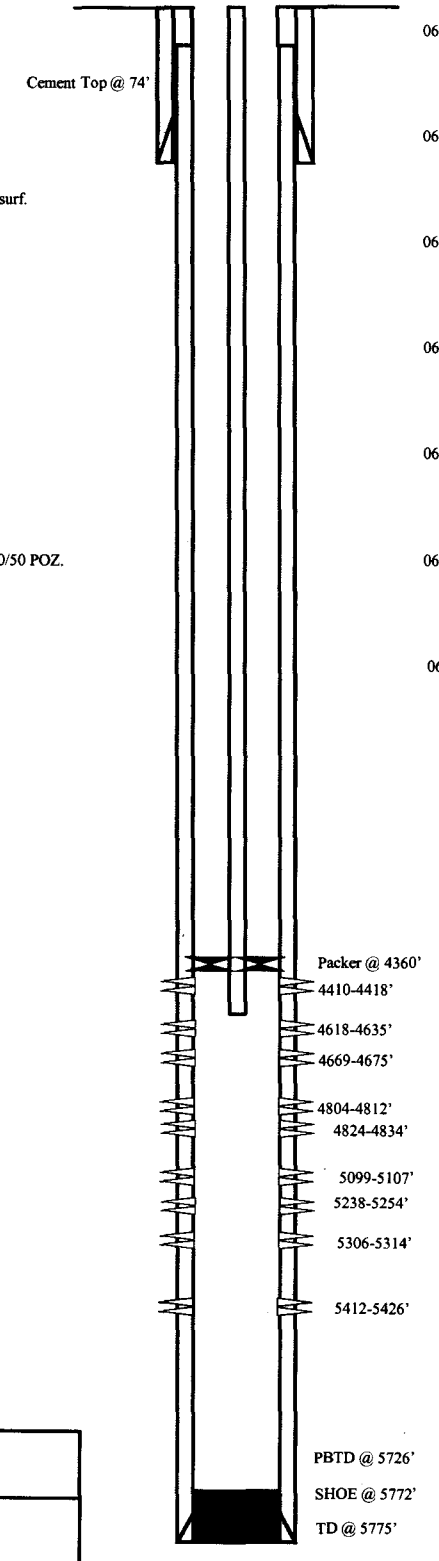

FRAC JOB

06/07/07 5412-5426' **Frac CP3 sands as follows:** 34633# 20/40 sand in 371 bbls Lightning 17 frac fluid. Treated @ avg press of 2052 psi w/avg rate of 24.7 BPM. ISIP 2154 psi. Calc flush: 5410 gal. Actual flush: 4906 gal.

06/08/07 5306-5314' **Frac CP1 sands as follows:** 24825# 20/40 sand in 338 bbls Lightning 17 frac fluid. Treated @ avg press of 2394 psi w/avg rate of 24.7 BPM. ISIP 2353 psi. Calc flush: 5304 gal. Actual flush: 4843 gal.

06/08/07 5238-5254' **Frac LODC sands as follows:** 69984# 20/40 sand in 557 bbls Lightning 17 frac fluid. Treated @ avg press of 2189 psi w/avg rate of 24.7 BPM. ISIP 2569 psi. Calc flush: 5236 gal. Actual flush: 4729 gal.

06/08/07 5099-5107' **Frac LODC sands as follows:** 44824# 20/40 sand in 411 bbls Lightning 17 frac fluid. Treated @ avg press of 2128 psi w/avg rate of 24.7 BPM. ISIP 2388 psi. Calc flush: 5097 gal. Actual flush: 4591 gal

06/08/07 4804-4834' **Frac A1&A3 sands as follows:** 84070# 20/40 sand in 625 bbls Lightning 17 frac fluid. Treated @ avg press of 1849 psi w/avg rate of 24.7 BPM. ISIP 2309 psi. Calc flush: 4802 gal. Actual flush: 4339 gal

06/08/07 4618-4675' **Frac B1 & B2 sands as follows:** 136676# 20/40 sand in 945 bbls Lightning 17 frac fluid. Treated @ avg press of 1720 psi w/avg rate of 24.7 BPM. ISIP 2016 psi. Calc flush: 4616 gal. Actual flush: 4154 gal

06/08/07 4410-4418' **Frac D1 sands as follows:** 36368# 20/40 sand in 369 bbls Lightning 17 frac fluid. Treated @ avg press of 1565 psi w/avg rate of 24.7 BPM. ISIP 1650 psi. Calc flush: 4408 gal. Actual flush: 4368 gal

PERFORATION RECORD

06/05/07	5412-5426'	4 JSPF	56 holes
06/07/07	5306-5314'	4 JSPF	32 holes
06/07/07	5238-5254'	4 JSPF	64 holes
06/08/07	5099-5107'	4 JSPF	32 holes
06/08/07	4824-4834'	4 JSPF	40 holes
06/08/07	4804-4812'	4 JSPF	32 holes
06/08/07	4669-4675'	4 JSPF	24 holes
06/08/07	4618-4635'	4 JSPF	68 holes
06/08/07	4410-4418'	4 JSPF	32 holes

NEWFIELD

FEDERAL 6-19-9-16

1941'FNL & 1851' FWL

SE/NW Section 19-T9S-R16E

Duchesne Co, Utah

API #43-013-33100; Lease # UTU-64379

JL 11/26/2013

WORK PROCEDURE FOR INJECTION CONVERSION

1. Rig up hot oil truck to casing. Pump water. Unseat pump. Flush rods. Trip out of hole with rods and pump.

2. Trip out of hole with tubing, breaking and doping every connection. Trip in hole with packer and tubing. Rig up water truck to casing. Pump packer fluid. Set packer.

3. Test casing and packer.

4. Rig down and move out.

REQUIREMENTS FOR INJECTION OF FLUIDS INTO RESERVOIRS
RULE R615-5-1

1. **Operations to increase ultimate recovery, such as cycling of gas, the maintenance of pressure, the introduction of gas, water or other substances into a reservoir for the purpose of secondary or other enhanced recovery or for storage and the injection of water into any formation for the purpose of water disposal shall be permitted only by order of the Board after notice and hearing.**

2. **A request for agency action for authority for the injection of gas, liquified petroleum gas, air, water or any other medium into any formation for any reason, including but not necessarily limited to the establishment of or the expansion of waterflood projects, enhanced recovery projects, and pressure maintenance projects shall contain:**

   2.1 The name and address of the operator of the project.

   Newfield Production Company
   1001 17th Street, Suite 2000
   Denver, Colorado 80202

   2.2 A plat showing the area involved and identifying all wells, including all proposed injection wells, in the project area and within one-half mile of the project area.

   See Attachment A.

   2.3 A full description of the particular operation for approval is requested.

   Approval is requested to convert the Federal #6-19-9-16 from a producing oil well to a water injection well in Monument Butte (Green River) Field.

   2.4 A description of the pools from which the identified wells are producing or have produced.

   The proposed injection well will inject into the Green River Formation.

   2.5 The names, description and depth of the pool or pools to be affected.

   The injection zone is in the Green River Formation. For the Federal #6-19-9-16 well, the proposed injection zone is from Garden Gulch to Basal Carbonate (3723' - 5726'). The confining strata directly above and below the injection zones are the Garden Gulch and the top of the Wasatch Formation or TD, which ever is shallower. The Garden Gulch Marker top is at 3391' and the TD is at 5775'.

   2.6 A copy of a log of a representative well completed in the pool.

   The referenced log for the Federal #6-19-9-16 is on file with the Utah Division of Oil, Gas and Mining.

2.7 A statement as to the type of fluid to be used for injection, its source and the estimated amounts to be injected daily.

The primary type and source of fluid to be used for injection will be culinary water commingled with produced water. The average estimated injection of fluids will be at a rate of 300 BPD, and the estimated maximum injection will be at a rate of 500 BPD.

2.8 A list of all operators and surface owners within one-half mile radius of the proposed project.

See Attachment B.

2.9 An affidavit certifying that said operators or owners and surface owners within a one-half mile radius have been provided a copy of the petition for injection.

See Attachment C.

2.10 Any additional information the Board may determine is necessary to adequately review the petition.

Newfield Production Company will supply any additional information requested by the Utah Division of Oil, Gas and Mining.

4.0 Establish recovery projects may be expanded and additional wells placed on injection only upon authority from the Board after notice and hearing or by administrative approval.

This proposed injection well is on a Federal lease (Lease #UTU-64379) in the Monument Butte Federal (Green River) Field, and this request is for administrative approval.

REQUIREMENTS FOR CLASS II INJECTION WELLS INCLUDING WATER DISPOSAL, STORAGE AND ENHANCED RECOVERY WELLS
SECTION V – RULE R615-5-2

1. **Injection well shall be completed, equipped, operated, and maintained in a manner that will prevent pollution and damage to any USDW, or other resources and will confine injected fluids to the interval approved.**

2. **The application for an injection well shall include a properly completed Form DOGM-UIC-1 and the following:**

   2.1 **A plat showing the location of the injection well, all abandoned or active wells within a one-half mile radius of the proposed wells, and the surface owner and the operator of any lands or producing leases, respectively, within a one-half mile radius of the proposed injection well.**

   See Attachments A and B.

   2.2 **Copies of electrical or radioactive logs, including gamma ray logs, for the proposed well run prior to the installation of casing and indicating resistivity, spontaneous potential, caliper and porosity.**

   All logs are on file with the Utah Division of Oil, Gas and Mining.

   2.3 **A copy of a cement bond or comparable log run for the proposed injection well after casing was set and cemented.**

   A copy of the cement bond log is on file with the Utah Division of Oil, Gas and Mining.

   2.4 **Copies of logs already on file with the Division should be referenced, but need not be refiled.**

   All copies of logs are on file with the Utah Division of Oil, Gas and Mining.

   2.5 **A description of the casing or proposed casing program of the injection well and of the proposed method for testing the casing before use of the well.**

   The casing program is 8-5/8", 24# surface casing run to 324' KB, and 5-1/2", 15.5# casing run from surface to 5772' KB. A casing integrity test will be conducted at the time of conversion. See Attachment E.

   2.6 **A statement as to the type of fluid to be used for injection, its source and estimated amounts to be injected daily.**

   The primary type and source of fluid to be used for injection will be culinary water commingled with produced water. The estimated average rate of injection will be 300 BPD, and the estimated maximum rate of injection will be 500 BPD.

   2.7 **Standard laboratory analysis of the fluid to be injected, the fluid in the formation into which the fluid is being injected, and the compatibility of the fluids.**

   See Attachment F.

2.8 The proposed average and maximum injection pressures.

The proposed average injection pressure will be approximately 1100 psig and the maximum injection pressure will not exceed 1621 psig.

2.9 Evidence and data to support a finding that the proposed injection well will not initiate fractures through the overlying strata or a confining interval that could enable the injected fluid or formation fluid to enter the fresh water strata.

The minimum fracture gradient for the Federal #6-19-9-16, for existing perforations (4410' - 5426') calculates at 0.81 psig/ft. The maximum injection pressures will be limited so as not to exceed this gradient. A step rate test will be performed periodically to ensure we are below parting pressure. The proposed maximum injection pressure is 1621 psig. We may add additional perforations between 3391' and 5775'. See Attachments G and G-1.

2.10 Appropriate geological data on the injection interval and confining beds, including the geologic name, lithologic description, thickness, depth, and lateral extent.

In the Federal #6-19-9-16, the proposed injection zone (3723' - 5726') is in the Garden Gulch to the Basal Carbonate of the Green River Formation. The reservoir is a very fine-grained sandstone with minor imbedded shale streaks. The estimated porosity is 13%. The members are composed of porous and permeable lenticular calcareous sandstone and low porosity carbonates and calcareous shale. The porous and lenticular sandstone varies in thickness from 0-31' and is confined to the Monument Butte Federal Field. Outside the Monument Butte Federal Field, the sandstone is composed of tight, very fine, silty, calcareous sandstone, less than 3' thick. The stratum confining the injection zone is composed of tight, moderately calcareous, sandy lacustrine shale. All of the confining strata are impermeable, and will effectively seal off the oil, gas, and water of the injection zone from any strata directly above or below it.

2.11 A review of the mechanical condition of each well within a one-half mile radius of the proposed injection well to assure that no conduit exists that could enable fluids to migrate up or down the wellbore and enter the improper intervals.

See Attachments E through E-12.

Additionally, the injection system will be equipped with high and low pressure shut down devices that will automatically shut in injection waters if a system blockage or leakage occurs. One way check valves will also ensure proper flow management. Relief valves will also be utilized for high-pressure relief.

2.12 An affidavit certifying that a copy of the application has been provided to all operators or owners, and surface owners within a one-half mile radius of the proposed injection well.

See Attachment C.

2.13 Any other information that the Board or Division may determine is necessary to adequately review the application.

Newfield Production Company will supply any requested information to the Board or Division.

ATTACHMENT A

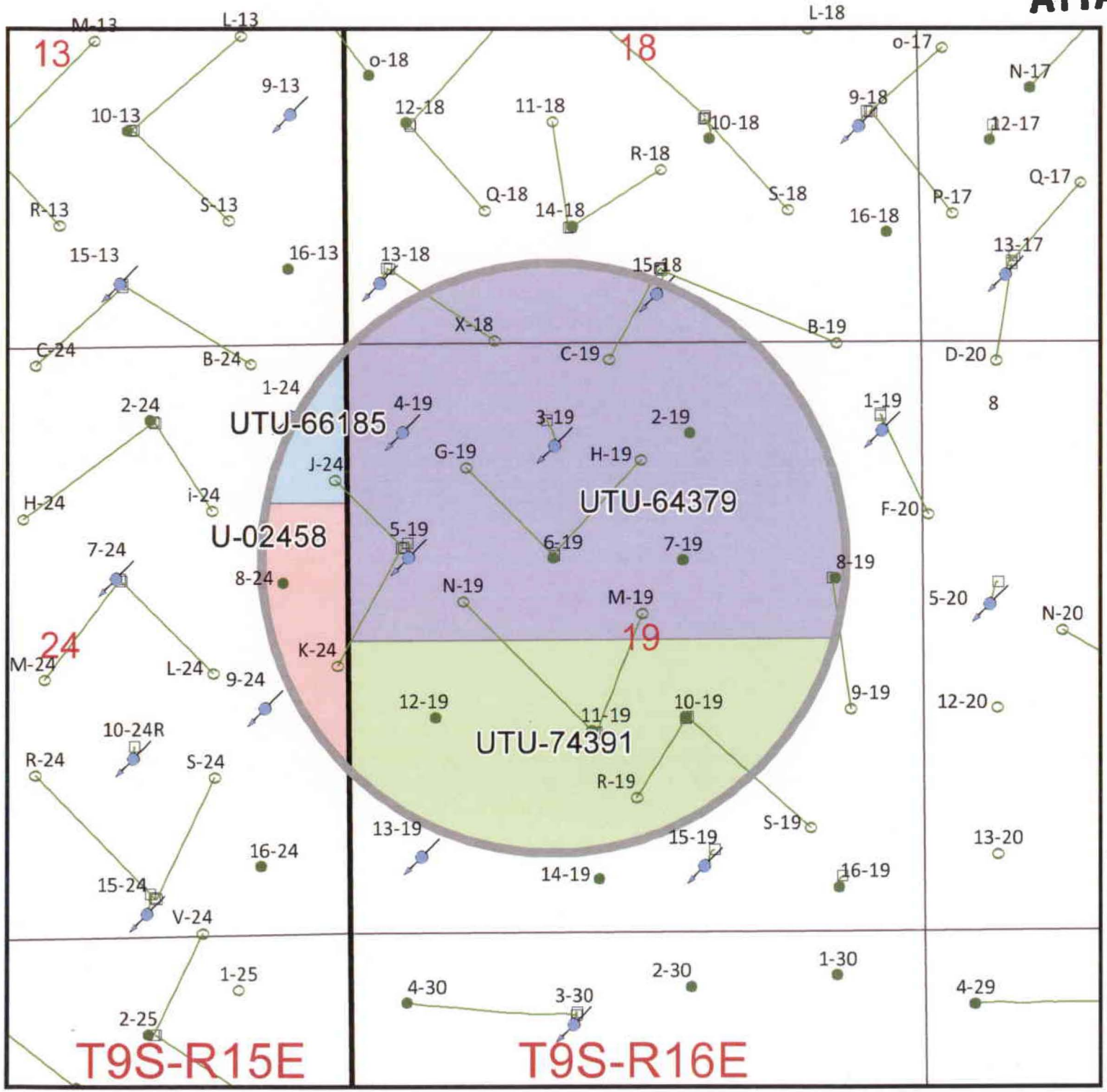

Lease Number

- U-02458
- UTU-64379
- UTU-66185
- UTU-74391
- Half-Mile Buffer

Well Status

- Location
- CTI
- Surface Spud
- Drilling
- Waiting on Completion
- Producing Oil Well
- Producing Gas Well
- Water Injection Well
- Dry Hole
- Temporarily Abandoned
- Plugged & Abandoned
- Shut In
- Well Surface Location

Federal 6-19-9-16
Section 19, T9S-R16E

NEWFIELD
ROCKY MOUNTAINS

N

1 in = 1,250 feet

1/2 Mile Radius Map

Duchesne County

1001 17th Street Suite 2000
Denver, Colorado 80202
Phone: (303) 893-0102

Nov. 7, 2013

ATTACHMENT A-1

T9S, R16E, S.L.B.&M.

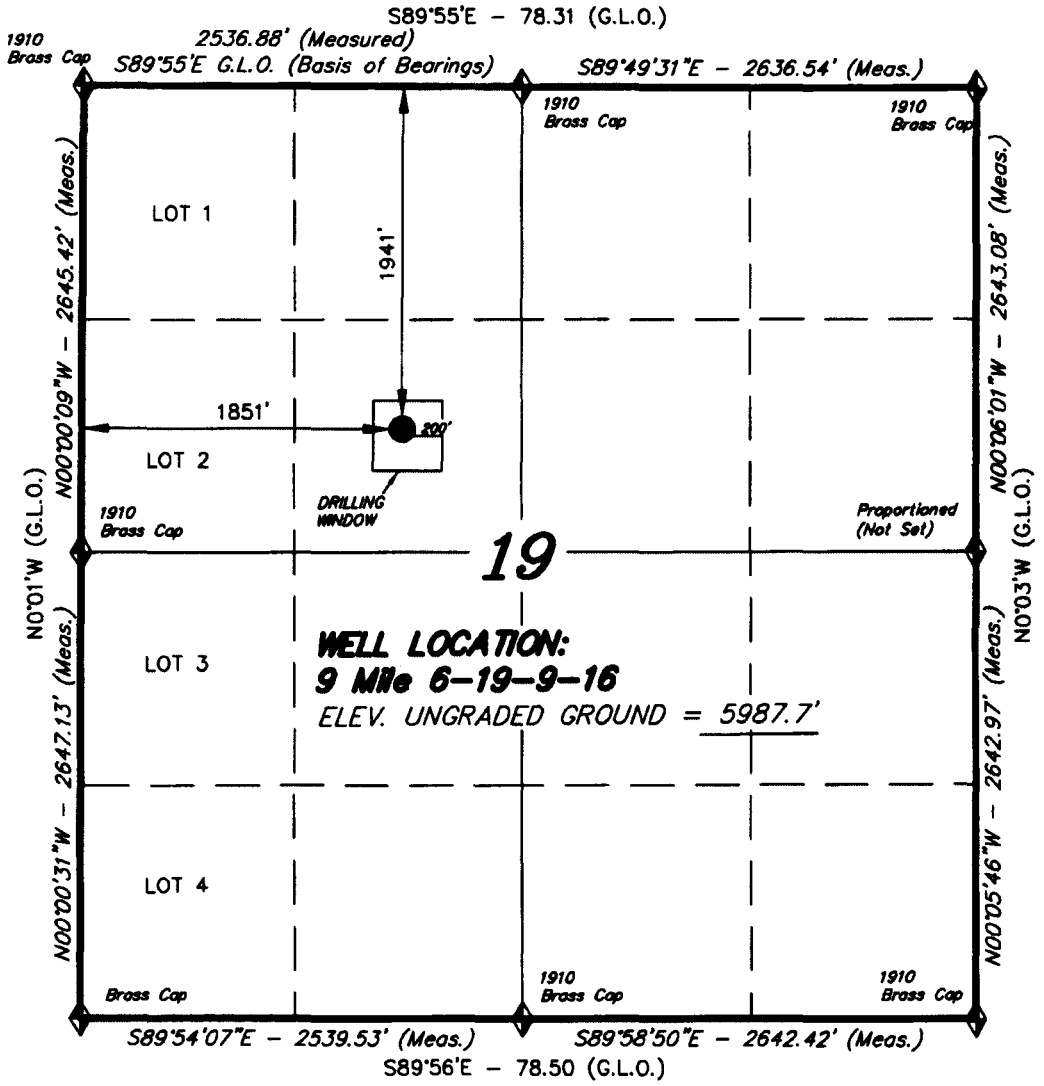

◆ = SECTION CORNERS LOCATED

BASIS OF ELEV;
U.S.G.S. 7-1/2 min QUAD (MYTON SW)

9 Mile 6-19-9-16
(Surface Location) NAD 83
LATITUDE = 40° 01' 06.06"
LONGITUDE = 110° 09' 52.27"

NEWFIELD PRODUCTION COMPANY

WELL LOCATION, 9 Mile 6-19-9-16, LOCATED AS SHOWN IN THE SE 1/4 NW 1/4 OF SECTION 19, T9S, R16E, S.L.B.&M. DUCHESNE COUNTY, UTAH.

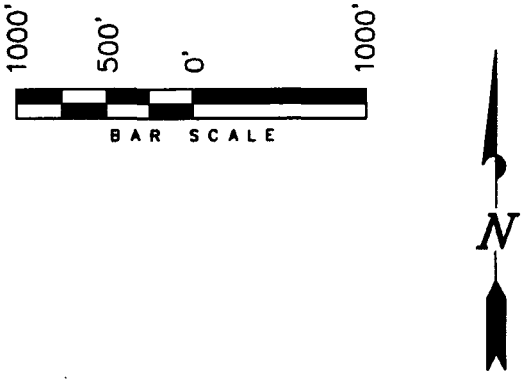

THIS IS TO CERTIFY THAT THE ABOVE PLAT WAS PREPARED FROM FIELD NOTES OF ACTUAL SURVEYS MADE BY ME OR UNDER MY SUPERVISION AND THAT THE SAME ARE TRUE AND CORRECT TO THE BEST OF MY KNOWLEDGE AND BELIEF.

REGISTERED LAND SURVEYOR
REGISTRATION No. 189377
STATE OF UTAH

STACY W. STEWART
REGISTERED LAND SURVEYOR
REGISTRATION No. 189377
STATE OF UTAH

TRI STATE LAND SURVEYING & CONSULTING
180 NORTH VERNAL AVE. - VERNAL, UTAH 84078
(435) 781-2501

DATE SURVEYED: 2-20-06	SURVEYED BY: C.M.
DATE DRAWN: 2-28-06	DRAWN BY: M.W.
REVISED:	SCALE: 1" = 1000'

EXHIBIT B

#	Legal Description	Lessor & Expiration	Lessee & Operating Rights	Surface Owner
1	T9S-R16E SLM	USA	Newfield Production Company	USA
	Section 8: SWNE, SE	UTU-64379	Newfield RMI LLC	
	Section 9: SWSW	HBP	Yates Petroleum Corp	
	Section 17: NE			
	Section 18: E2SW, SE, LOTS 3,4			
	Section 19: NE, E2NW, LOTS 1,2			
	Section 21: N2			
	Section 22: W2NE, SENE, NW			
2	T9S-R16E SLM	USA	Newfield Production Company	USA
	Section 19: E2SW, SE, LOTS 3, 4	UTU-74391	Newfield RMI LLC	
	Section 20: S2	HBP	ABO Petroleum Corp	
	Section 29: All		MYCO Industries Inc	
	Section 30: All		OXY Y-1 Company	
			Yates Petroleum Corp	
3	T9S-R15E SLM	USA	Newfield Production Company	USA
	Section 22: E2SW, LOTS 2, 3, 4	UTU-66185	Newfield RMI LLC	
	Section 23: NENE, W2E2, S2NW, E2SW	HBP		
	Section 24: N2N2			
	Section 25: All			
	Section 26: NE, NENW, S2NW, S2			
	Section 27: S2NE, E2NW, SE, LOTS 1, 2			
4	T9S-R15E SLM	USA	Newfield Production Company	USA
	Section 23: SENE, W2SW, NESE	UTU-002458	Newfield RMI LLC	
	Section 24: S2N2, S2	HBP		

ATTACHMENT C

CERTIFICATION FOR SURFACE OWNER NOTIFICATION

RE: Application for Approval of Class II Injection Well
Federal #6-19-9-16

I hereby certify that a copy of the injection application has been provided to all surface owners within a one-half mile radius of the proposed injection well.

Signed: _____
Newfield Production Company
Jill L Loyle
Regulatory Associate

Sworn to and subscribed before me this 5th day of December, 2013.

Notary Public in and for the State of Colorado: _____

My Commission Expires: 1/31/15

LYDIA BIONDO
Notary Public
State of Colorado

ATTACHMENT E

FEDERAL 6-19-9-16

Spud Date: 05/13/07
Put on Production: 06/12/07

GL: 5988' KB: 6000'

Wellbore Diagram

Initial Production: BOPD, MCFD, BWPD

SURFACE CASING

CSG SIZE: 8-5/8"
GRADE: J-55
WEIGHT: 24#
LENGTH: 7 jts. (312.05')
DEPTH LANDED: 323.90' KB
HOLE SIZE:12-1/4"
CEMENT DATA: 160 sxs Class "G" cmt, est 3 bbls cmt to surf.

PRODUCTION CASING

CSG SIZE: 5-1/2"
GRADE: J-55
WEIGHT: 15.5#
LENGTH: 131 jts. (5758.79')
DEPTH LANDED: 5772.04' KB
HOLE SIZE: 7-7/8"
CEMENT DATA: 300 sxs Prem. Lite II mixed & 425 sxs 50/50 POZ.
CEMENT TOP: 74'

TUBING

SIZE/GRADE/WT.: 2-7/8" / J-55 / 6.5#
NO. OF JOINTS: 173 jts (5368.53')
TUBING ANCHOR: 5380.53' KB
NO. OF JOINTS: 1 jts (29.45')
SEATING NIPPLE: 2-7/8" (1.10')
SN LANDED AT: 5412.78' KB
NO. OF JOINTS: 2 jts (60.64')
TOTAL STRING LENGTH: EOT @ 5474.97' KB

SUCKER RODS

POLISHED ROD: 1-1/2" x 26' SM polished rods
SUCKER RODS:1-4' & 1- 8' x 3/4" pony rods, 100-3/4" scrapered rods, 100-3/4" plain rods, 10-3/4" scrapered rods, 6-1 ½" weight rods.
PUMP SIZE: CDI 2-1/2" x 1-1/2" x 20' RHAC
STROKE LENGTH: 102"
PUMP SPEED, 4.5 SPM:

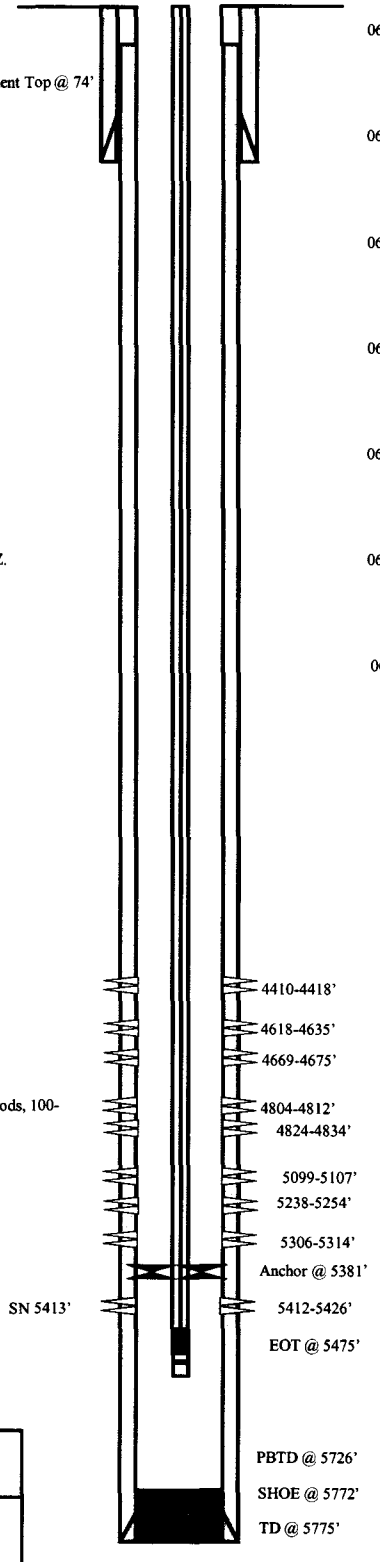

FRAC JOB

06/07/07 5412-5426' **Frac CP3 sands as follows:** 34633# 20/40 sand in 371 bbls Lightning 17 frac fluid. Treated @ avg press of 2052 psi w/avg rate of 24.7 BPM. ISIP 2154 psi. Calc flush: 5410 gal. Actual flush: 4906 gal.

06/08/07 5306-5314' **Frac CP1 sands as follows:** 24825# 20/40 sand in 338 bbls Lightning 17 frac fluid. Treated @ avg press of 2394 psi w/avg rate of 24.7 BPM. ISIP 2353 psi. Calc flush: 5304 gal. Actual flush: 4843 gal.

06/08/07 5238-5254' **Frac LODC sands as follows:** 69984# 20/40 sand in 557 bbls Lightning 17 frac fluid. Treated @ avg press of 2189 psi w/avg rate of 24.7 BPM. ISIP 2569 psi. Calc flush: 5236 gal. Actual flush: 4729 gal.

06/08/07 5099-5107' **Frac LODC sands as follows:** 44824# 20/40 sand in 411 bbls Lightning 17 frac fluid. Treated @ avg press of 2128 psi w/avg rate of 24.7 BPM. ISIP 2388 psi. Calc flush: 5097 gal. Actual flush: 4591 gal

06/08/07 4804-4834' **Frac A1&A3 sands as follows:** 84070# 20/40 sand in 625 bbls Lightning 17 frac fluid. Treated @ avg press of 1849 psi w/avg rate of 24.7 BPM. ISIP 2309 psi. Calc flush: 4802 gal. Actual flush: 4339 gal

06/08/07 4618-4675' **Frac B1 & B2 sands as follows:** 136676# 20/40 sand in 945 bbls Lightning 17 frac fluid. Treated @ avg press of 1720 psi w/avg rate of 24.7 BPM. ISIP 2016 psi. Calc flush: 4616 gal. Actual flush: 4154 gal

06/08/07 4410-4418' **Frac D1 sands as follows:** 36368# 20/40 sand in 369 bbls Lightning 17 frac fluid. Treated @ avg press of 1565 psi w/avg rate of 24.7 BPM. ISIP 1650 psi. Calc flush: 4408 gal. Actual flush: 4368 gal

PERFORATION RECORD

06/05/07	5412-5426'	4 JSPF	56 holes
06/07/07	5306-5314'	4 JSPF	32 holes
06/07/07	5238-5254'	4 JSPF	64 holes
06/08/07	5099-5107'	4 JSPF	32 holes
06/08/07	4824-4834'	4 JSPF	40 holes
06/08/07	4804-4812'	4 JSPF	32 holes
06/08/07	4669-4675'	4 JSPF	24 holes
06/08/07	4618-4635'	4 JSPF	68 holes
06/08/07	4410-4418'	4 JSPF	32 holes

NEWFIELD

FEDERAL 6-19-9-16

1941'FNL & 1851' FWL

SE/NW Section 19-T9S-R16E

Duchesne Co, Utah

API #43-013-33100; Lease # UTU-64379

TW 08/13/07

ATTACHMENT E-1

FEDERAL 4-19-9-16

Spud Date: 09/21/07

Put on Production: 10/16/07

GL: 6147' KB: 6159'

Injection Wellbore Diagram

SURFACE CASING

CSG SIZE: 8-5/8"

GRADE: J-55

WEIGHT: 24#

LENGTH: 7 jts. (318.36')

DEPTH LANDED: 318.43' KB

HOLE SIZE:12-1/4"

CEMENT DATA:1- 160, sxs Class "G" cmt, 5 bbls cmt to surf.

PRODUCTION CASING

CSG SIZE: 5-1/2"

GRADE: J-55

WEIGHT: 15.5#

LENGTH: 154 jts. (5940.31')

DEPTH LANDED: 5953.56' KB

HOLE SIZE: 7-7/8"

CEMENT DATA: 300 sxs Prem. Lite II mixed & 400 sxs 50/50 POZ.

CEMENT TOP: 113'

TUBING

SIZE/GRADE/WT.: 2-7/8" / J-55 / 6.5#

NO. OF JOINTS: 136 jts (4244')

SEATING NIPPLE: 2-7/8" (1.10')

SN LANDED AT: 4254' KB

ON/OFF TOOL AT: 4255.1'

ARROW #1 PACKER CE AT: 4260.3'

XO 2-3/8 x 2-7/8 J-55 AT: 4263.7'

TBG PUP 2-3/8 J-55 AT: 4264.2'

X/N NIPPLE AT: 4268.3'

TOTAL STRING LENGTH: EOT @ 4270.07'

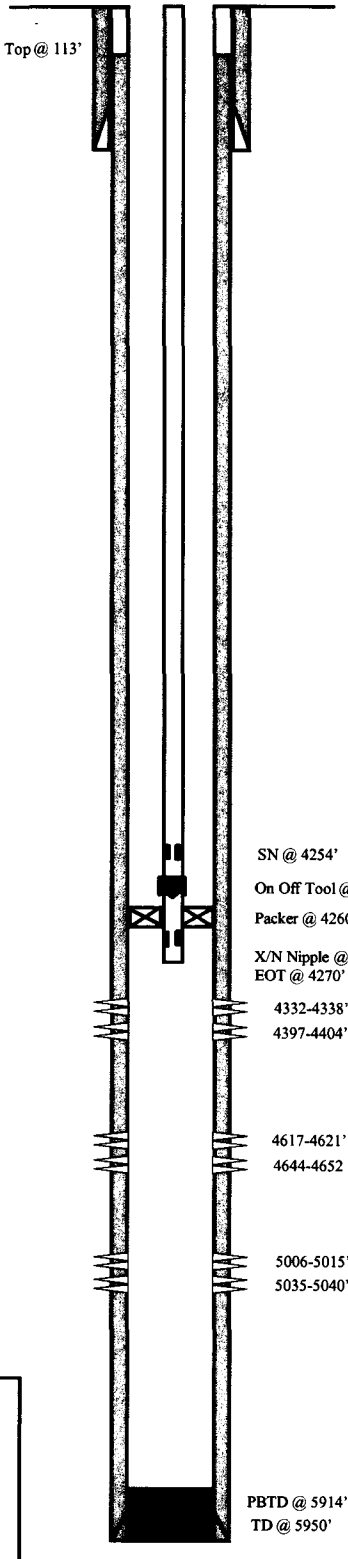

FRAC JOB

10/24/07	5006-5040'	**Frac A1 & A3 sands as follows:** 59956# 20/40 sand in 510 bbls Lightning 17 frac fluid. Treated @ avg press of 2310 psi w/avg rate of 27.4 BPM. ISIP 2530 psi. Calc flush: 5004 gal. Actual flush: 4494 gal.
10/24/07	4617-4652'	**Frac D1 & D2 sands as follows:** 60019# 20/40 sand in 499 bbl Lightning 17 frac fluid. Treated @ avg press of 1873 psi w/avg rate of 24.8 BPM. ISIP 2145 psi. Calc flush: 4615 gal. Actual flush: 4116 gal.
10/24/07	4332-4404'	**Frac PB10 & PB11 sands as follows:** 38622# 20/40 sand in 415 bbls Lightning 17 frac fluid. Treated @ avg press of 2107 psi w/avg rate of 24.8 BPM. ISIP 2145 psi. Calc flush: 4330 gal. Actual flush: 4200 gal.
6/11/08		**Stuck pump.** Updated tubing and rod detail
6/18/09		**Tubing Leak.** Updated rod & tubing details.
10-6-10		**Parted Rods.** Update rod and tubing details.
09/26/13		**Convert to Injection Well**
10/01/13		**Conversion MIT Finalized** – update tbg detail

PERFORATION RECORD

5035-5040'	4 JSPF	20 holes
5006-5015'	4 JSPF	36 holes
4644-4652'	4 JSPF	32 holes
4617-4621'	4 JSPF	16 holes
4397-4404'	4 JSPF	28 holes
4332-4338'	4 JSPF	24 holes

NEWFIELD

FEDERAL 4-19-9-16

795'FNL & 507' FWL

NW/NW Section 19-T9S-R16E

Duchesne Co, Utah

API #43-013-33065; Lease # UTU-64379

LCN 10/02/13

ATTACHMENT E-2

FEDERAL 5-19-9-16

Spud Date: 08/29/07

Put on Production: 10/08/07

GL: 6182' KB: 6194'

Injection Wellbore Diagram

SURFACE CASING

CSG SIZE: 8-5/8"

GRADE: J-55

WEIGHT: 24#

LENGTH: 7 jts. (301.00')

DEPTH LANDED: 312.85' KB

HOLE SIZE:12-1/4"

CEMENT DATA: 160 sxs Class "G" cmt, est 5 bbls cmt to surf.

PRODUCTION CASING

CSG SIZE: 5-1/2"

GRADE: J-55

WEIGHT: 15.5#

LENGTH: 149 jts. (5914.34')

DEPTH LANDED: 5927.59' KB

HOLE SIZE: 7-7/8"

CEMENT DATA: 300 sxs Prem. Lite II mixed & 400 sxs 50/50 POZ.

TUBING

SIZE/GRADE/WT.: 2-7/8" / J-55 / 6.5#

NO. OF JOINTS: 147 jts (4532.2')

SEATING NIPPLE: 2-7/8" (1.10')

SN LANDED AT: 4544.2' KB

RETRIEVING HEAD 4-1/2" N-80 AT: 4545.3'

PACKER CE AT: 4550.4' w/ 1.875 profile X-nipple

TBG PUP 2-3/8" J-55 AT: 4554.1'

TOTAL STRING LENGTH: EOT @ 4558' KB

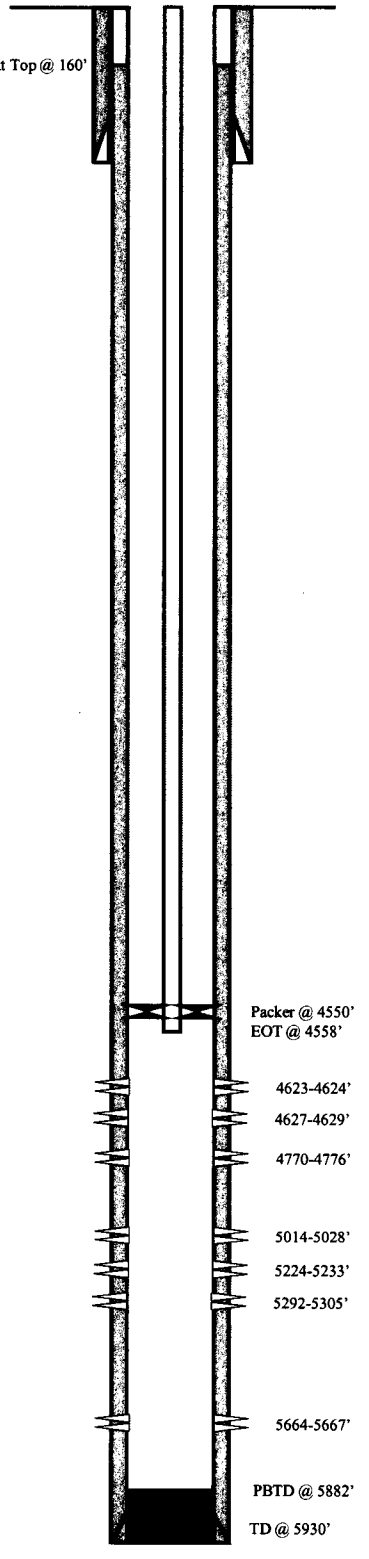

FRAC JOB

10/02/07	5292-5305'	**Frac LODC sands as follows:** 70815# 20/40 sand in 589 bbls Lightning 17 frac fluid. Treated @ avg press of 2092 psi w/avg rate of 24.8 BPM. ISIP 2307 psi. Calc flush: 5290 gal. Actual flush: 4784 gal.
10/02/07	5224-5233'	**Frac LODC sands as follows:** 56237# 20/40 sand in 502 bbls Lightning 17 frac fluid. Treated @ avg press of 2357 psi w/avg rate of 24.8 BPM. ISIP 2399 psi. Calc flush: 5222 gal. Actual flush: 4717 gal.
10/04/07	5014-5028'	**Frac A3 sands as follows:** 49854# 20/40 sand in 466 bbls Lightning 17 frac fluid. Treated @ avg press of 1934 psi w/avg rate of 24.8 BPM. ISIP 2070 psi. Calc flush: 5012 gal. Actual flush: 4507 gal.
10/05/07	4770-4776'	**Frac C sands as follows:** 16441# 20/40 sand in 257 bbls Lightning 17 frac fluid. Treated @ avg press of 2243 psi w/avg rate of 24.8 BPM. ISIP 3458 psi. Calc flush: 4768 gal. Actual flush: 4683 gal.
10/21/09		**Pump Change**. Updated rod & tubing details.
7/14/2011		**Tubing Leak.** Updated rod & tubing details.
08/30/12	5664-5667'	**Frac CP4 sands as follows:** 18147# 20/40 sand in 229 bbls Lightning 17 frac fluid.
08/30/12	4623-4629'	**Frac D1 sands as follows:** 16342# 20/40 sand in 236 bbls Lightning 17 frac fluid.
08/31/12		**Convert to Injection Well**
09/05/12		**Conversion MIT Finalized** – update tbg detail

PERFORATION RECORD

10/01/07	5292-5305'	4 JSPF	52 holes
10/02/07	5224-5233'	4 JSPF	36 holes
10/02/07	5014-5028'	4 JSPF	56 holes
10/04/07	4770-4776'	4 JSPF	24 holes
08/28/12	5664-5667'	3 JSPF	9 holes
08/28/12	4627-4629'	3 JSPF	6 holes
08/28/12	4623-4624'	3 JSPF	3 holes

NEWFIELD

FEDERAL 5-19-9-16

1785'FNL & 544' FWL

SW/NW Section 19-T9S-R16E

Duchesne Co, Utah

API #43-013-33174; Lease # UTU-64379

LCN 09/06/12

ATTACHMENT E-3

FEDERAL 15-18-9-16

Spud Date: 09/18/07

Put on Production: 10/16/07

GL: 6049' KB: 6061'

Injection Wellbore Diagram

SURFACE CASING

CSG SIZE: 8-5/8"

GRADE: J-55

WEIGHT: 24#

LENGTH: 7 jts. (312.36')

DEPTH LANDED: 324.21' KB

HOLE SIZE:12-1/4"

CEMENT DATA:1- 160, 2-300 sxs Class "G" cmt, est 7 bbls cmt to surf.

PRODUCTION CASING

CSG SIZE: 5-1/2"

GRADE: J-55

WEIGHT: 15.5#

LENGTH: 154 jts. (5986.37')

DEPTH LANDED: 5999.62' KB

HOLE SIZE: 7-7/8"

CEMENT DATA: 300 sxs Prem. Lite II mixed & 450 sxs 50/50 POZ.

CEMENT TOP: 30'

TUBING

SIZE/GRADE/WT.: 2-7/8" / J-55 / 6.5#

TUBING 1 jt 2-7/8" N-80 (31.2')

TBG SUB 2-7/8 N-80 (6.2')

TBG SUB 2-7/8 J-55 (6.2')

NO. OF JOINTS: 146 jts (4492.9')

SEATING NIPPLE: 2-7/8" (1.10')

SN LANDED AT: 4548.6' KB

ON/OFF TOOL AT: 4549.7'

ARROW #1 PACKER CE AT: 4554.41'

XO 2-3/8 x 2-7/8 J-55 AT: 4558.1'

TBG SUB 2-3/8 J-55 AT: 4558.6'

X/N NIPPLE AT: 4564.8'

TOTAL STRING LENGTH: EOT @ 4566'

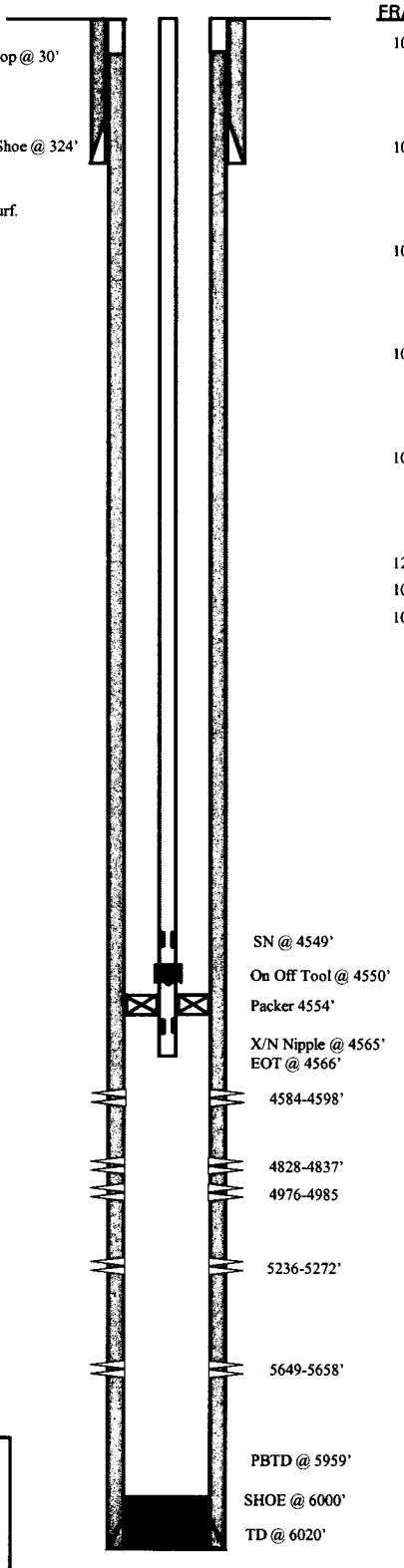

FRAC JOB

10/11/07	5649-5658'	**Frac CP3 sands as follows:** 15067# 20/40 sand in 290 bbls Lightning 17 frac fluid. Treated @ avg press of 2158 psi w/avg rate of 24.8 BPM. ISIP 1805 psi. Calc flush: 5647 gal. Actual flush: 5166 gal.
10/11/07	5236-5272'	**Frac LODC sands as follows:** 159885# 20/40 sand in 1115 bbl Lightning 17 frac fluid. Treated @ avg press of 1955 psi w/avg rate of 24.8 BPM. ISIP 2340 psi. Calc flush: 5234 gal. Actual flush: 4746 gal.
10/11/07	4976-4985'	**Frac A1 sands as follows:** 34607# 20/40 sand in 423 bbls Lightning 17 frac fluid. Treated @ avg press of 2543 psi w/avg rate of 29.9 BPM. ISIP 3582 psi. Calc flush: 4974 gal. Actual flush: 4494 gal.
10/11/07	4828-4837'	**Frac B1 sands as follows:** 15082# 20/40 sand in 267 bbls Lightning 17 frac fluid. Treated @ avg press of 2075 psi w/avg rate of 24.8 BPM. ISIP 1935 psi. Calc flush: 4826 gal. Actual flush: 4326 gal.
10/11/07	4584-4598'	**Frac D1 sands as follows:** 47763# 20/40 sand in 455 bbls Lightning 17 frac fluid. Treated @ avg press of 1975 psi w/avg rate of 24.8 BPM. ISIP 2078 psi. Calc flush: 4582 gal. Actual flush: 4491 gal.
12-31-07		**Pump Change**. Updated rod & tubing details.
10/22/12		**Convert to Injection Well**
10/23/12		**Conversion MIT Finalized** – update tbg detail

PERFORATION RECORD

10/11/07	4584-4598'	4 JSPF	56 holes
10/11/07	4828-4837'	4 JSPF	36 holes
10/11/07	4976-4985'	4 JSPF	36 holes
10/11/07	5236-5272'	4 JSPF	144 holes
10/11/07	5649-5658'	4 JSPF	36 holes

NEWFIELD

BELUGA FEDERAL 15-18-9-16

657'FSL & 2350' FEL

SW/SE Section 18-T9S-R16E

Duchesne Co, Utah

API #43-013-33001; Lease # UTU-64379

LCN 10/24/12

ATTACHMENT E-4

Federal 2-19-9-16

Spud Date: 5/21/2009
Put on Production: 6/30/2009

GL: 5966' KB: 5978'

Wellbore Diagram

SURFACE CASING

CSG SIZE: 8-5/8"
GRADE: J-55
WEIGHT: 24#
LENGTH: 7 jts. (276')
DEPTH LANDED: 328'
HOLE SIZE: 12-1/4"
CEMENT DATA: 220 sxs Class "G" cmt

PRODUCTION CASING

CSG SIZE: 5-1/2"
GRADE: J-55
WEIGHT: 15.5#
LENGTH: 145 jts. (5772')
HOLE SIZE: 7-7/8"
DEPTH LANDED: 5799.81'
CEMENT DATA: 300 sxs Prem. Lite II mixed & 400 sxs 50/50 POZ.
CEMENT TOP AT: 88'

TUBING

SIZE/GRADE/WT.: 2-7/8" / J-55 / 6.5#
NO. OF JOINTS: 173 jts (5325')
TUBING ANCHOR: 5337'
NO. OF JOINTS: 1 jts (30.9')
SEATING NIPPLE: 2-7/8" (1.1')
SN LANDED AT: 5371' KB
NO. OF JOINTS: 2 jts (61.7')
TOTAL STRING LENGTH: EOT @ 5434'

SUCKER RODS

POLISHED ROD: 1-1/2" x 26'
SUCKER RODS: 1 - 4' x ¾" pony rods, 101 – ¾" guided rods, 87 – ¾" sucker rods, 20 – ¾" guided rods, 6 - 1 ½" weight bars
PUMP SIZE: 2 ½ x 1 ½ x 20' RHAC
STROKE LENGTH: 100
PUMP SPEED: SPM 5

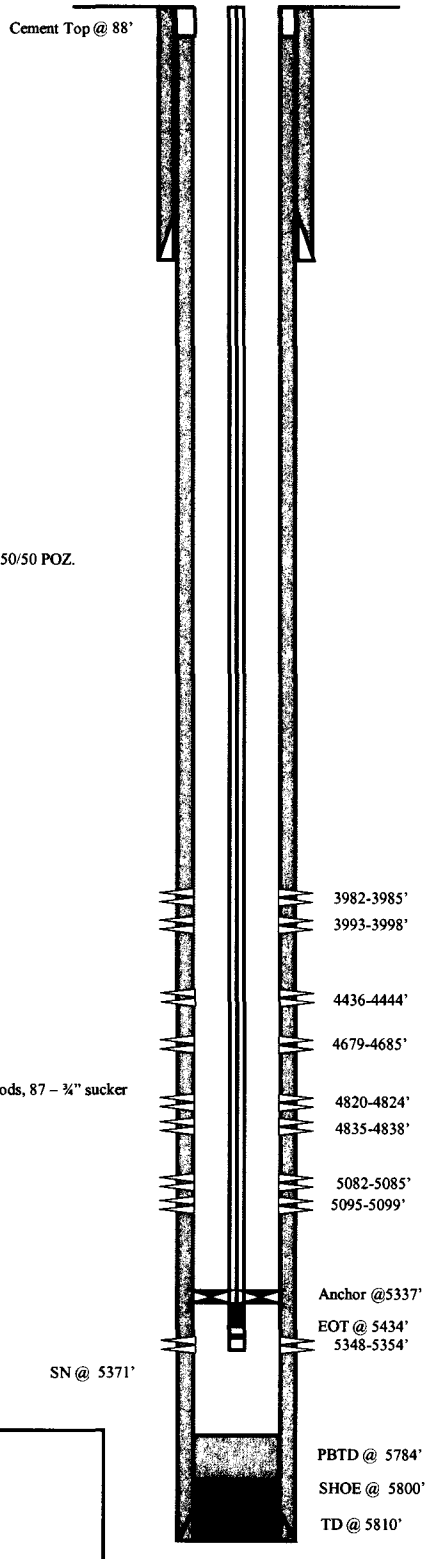

FRAC JOB

7-1-09	5348-5354'	**Frac CP1 sands as follows:** Frac with 19980# 20/40 sand in 165 bbls Lightning 17 fluid.
7-1-09	5082-5099'	**Frac LODC sands as follows:** Frac with 25343# 20/40 sand in 207 bbls Lightning 17 fluid.
7-1-09	4820-4838'	**Frac A1 sands as follows:** Frac with 25225# 20/40 sand in 206 bbls Lightning 17 fluid.
7-1-09	4679-4685'	**Frac B1 sands as follows:** Frac with 31161# 20/40 sand in 248 bbls Lightning 17 fluid.
7-1-09	4436-4444'	**Frac D1 sands as follows:** Frac with 81584# 20/40 sand in 472 bbls Lightning 17 fluid.
7-1-09	3982-3998'	**Frac GB6 sands as follows:** Frac with 85303# 20/40 sand in 491 bbls Lightning 17 fluid.

PERFORATION RECORD

5348-5354'	3 JSPF	18 holes
5095-5099'	3 JSPF	12 holes
5082-5085'	3 JSPF	9 holes
4835-4838'	3 JSPF	9 holes
4820-4824'	3 JSPF	12 holes
4679-4685'	3 JSPF	18 holes
4436-4444'	3 JSPF	24 holes
3993-3998'	3 JSPF	15 holes
3982-3985'	3 JSPF	9 holes

NEWFIELD

Federal 2-19-9-16
821' FNL & 2093' FEL NW/NE
Section 19-T9S-R16E
Duchesne Co, Utah
API #43-013-33063; Lease #UTU-64379

LCN 9-25-09

ATTACHMENT E-5

FEDERAL 3-19-9-16

Spud Date: 09/12/07

Put on Production: 10/11/07

GL: 6131' KB: 6143'

Injection Wellbore Diagram

SURFACE CASING

CSG SIZE: 8-5/8"

GRADE: J-55

WEIGHT: 24#

LENGTH: 7 jts. (312.15')

DEPTH LANDED: 324.27' KB

HOLE SIZE:12-1/4"

CEMENT DATA: 160 sxs Class "G" cmt, est 7 bbls cmt to surf.

PRODUCTION CASING

CSG SIZE: 5-1/2"

GRADE: J-55

WEIGHT: 15.5#

LENGTH: 153 jts. (5897.02')

DEPTH LANDED: 5945.27' KB

HOLE SIZE: 7-7/8"

CEMENT DATA: 300 sxs Prem. Lite II mixed & 440 sxs 50/50 POZ.

CEMENT TOP: 30'

TUBING

SIZE/GRADE/WT.: 2-7/8" / J-55 / 6.5#

NO. OF JOINTS: 129 jts (3981.0')

SEATING NIPPLE: 2-7/8" (1.10')

SN LANDED AT: 3993' KB

ON/OFF TOOL AT: 3994.1'

SEAL NIPPLE AT: 3995.6'

ARROW #1 PACKER CE AT: 3999'

XO 2-3/8 x 2-7/8 J-55 AT: 4002.9'

TBG PUP 2-3/8 J-55 AT: 4003.3'

X/N NIPPLE AT: 4007.4'

TOTAL STRING LENGTH: EOT @ 4009'

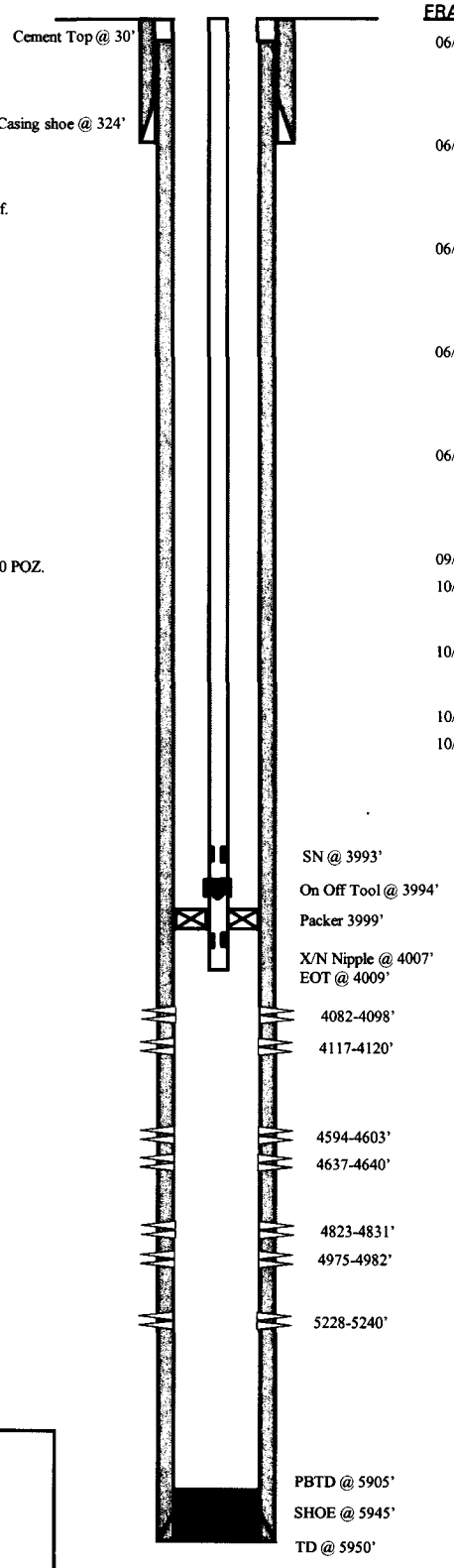

FRAC JOB

06/27/07	5228-5240'	**Frac LODC sands as follows:** 45550# 20/40 sand in 450 bbls Lightning 17 frac fluid. Treated @ avg press of 1899 psi w/avg rate of 24.7 BPM. ISIP 2160 psi. Calc flush: 5226 gal. Actual flush: 4746 gal.
06/27/07	4975-4982'	**Frac A1 sands as follows:** 24422# 20/40 sand in 350 bbls Lightning 17 frac fluid. Treated @ avg press of 2402 psi w/avg rate of 24.9 BPM. ISIP 2248 psi. Calc flush: 4973 gal. Actual flush: 4494 gal.
06/27/07	4823-4831'	**Frac B.5 sands as follows:** 29655# 20/40 sand in 390 bbls Lightning 17 frac fluid. Treated @ avg press of 2022 psi w/avg rate of 24.8 BPM. ISIP 1907 psi. Calc flush: 4821 gal. Actual flush: 4326 gal.
06/27/07	4594-4603'	**Frac D1 sands as follows:** 69977# 20/40 sand in 571 bbls Lightning 17 frac fluid. Treated @ avg press of 1748 psi w/avg rate of 24.8 BPM. ISIP 1927 psi. Calc flush: 4592 gal. Actual flush: 4074 gal.
06/27/07	4082-4098'	**Frac GB4 sands as follows:** 84076# 20/40 sand in 655 bbls Lightning 17 frac fluid. Treated @ avg press of 1625 psi w/avg rate of 24.8 BPM. ISIP 1836 psi. Calc flush: 4080 gal. Actual flush: 3990 gal
09/17/10		**Pump Change.** Rod & tubing detail updated.
10/05/12	4637-4640'	**Frac D2 sands as follows:** 23809# 20/40 sand in 239 bbls Lightning 17 frac fluid.
10/05/12	4117-4120'	**Frac GB6 sands as follows:** 19413# 20/40 sand in 193 bbls Lightning 17 frac fluid.
10/09/12		**Convert to Injection well**
10/12/12		**Conversion MIT Finalized** – update tbg detail

PERFORATION RECORD

10/11/07	5228-5240'	4 JSPF	48 holes
10/11/07	4975-4982'	4 JSPF	28 holes
10/11/07	4823-4831'	4 JSPF	32 holes
10/11/07	4594-4603'	4 JSPF	36 holes
10/11/07	4082-4098'	4 JSPF	64 holes
10/03/12	4637-4640'	3 JSPF	9 holes
10/03/12	4117-4120'	3 JSPF	9 holes

NEWFIELD

FEDERAL 3-19-9-16

699'FNL & 1802' FWL

NE/NW Section 19-T9S-R16E

Duchesne Co, Utah

API #43-013-33064; Lease # UTU-64379

LCN 10/18/12

 Attachment E-6

FEDERAL 7-19-9-16

Spud Date: 09/25/07
Put on Production: 12/06/07
GL: 6137' KB: 6149'

Injection Wellbore Diagram

SURFACE CASING

CSG SIZE: 8-5/8"
GRADE: J-55
WEIGHT: 24#
LENGTH: 7 jts (312.36')
DEPTH LANDED: 316.01' KB
HOLE SIZE: 12-1/4"
CEMENT DATA: 1- 160, sxs Class "G" cmt, est 3 bbls cmt to surf.

PRODUCTION CASING

CSG SIZE: 5-1/2"
GRADE: J-55
WEIGHT: 15.5#
LENGTH: 138 jts. (5929.84')
DEPTH LANDED: 5943.09' KB
HOLE SIZE: 7-7/8"
CEMENT DATA: 300 sxs Prem. Lite II mixed & 400 sxs 50/50 POZ.
CEMENT TOP: 175'

TUBING

SIZE/GRADE/WT.: 2-7/8" / J-55 / 6.5#
NO OF JOINTS: 128 jts (4021')
SEATING NIPPLE: 2-7/8" (1.10')
SN LANDED AT: 4033' KB
ON/OFF TOOL AT: 4034.1'
ARROW #1 PACKER CE AT: 4039.4'
XO 2-3/8 x 2-7/8 J-55 AT: 4043.5'
TBG PUP 2-3/8 J-55 AT: 4044'
X/N NIPPLE AT: 4048.2'
TOTAL STRING LENGTH: EOT @ 4049.7'

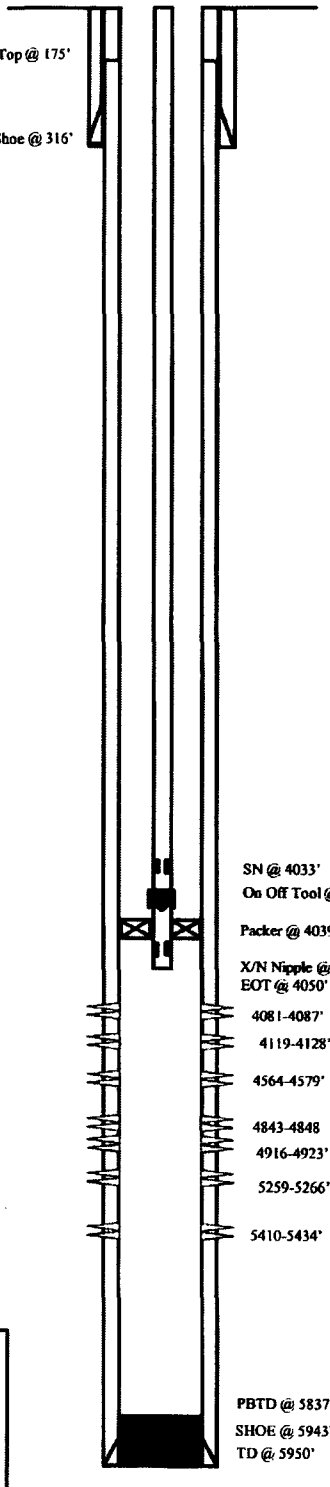

FRAC JOB

11/19/07	5410-5434'	**Frac LODC sands as follows:** 109202# 20/40 sand in 819 bbls Lightning 17 frac fluid. Treated @ avg press of 2224 psi w/avg rate of 23.1 BPM. ISIP 2660 psi. Calc flush: 5408 gal. Actual flush: 4906 gal.
11/28//07	5259-5266'	**Frac LODC sands as follows:** 39849# 20/40 sand in 409 bbl Lightning 17 frac fluid. Treated @ avg press of 2270 psi w/avg rate of 22.9 BPM. ISIP 2197 psi. Calc flush: 5257 gal. Actual flush: 4759 gal.
11/28/07	4916-4923'	**Frac A.5 sands as follows:** 190567# 20/40 sand in 298 bbls Lightning 17 frac fluid. Treated @ avg press of 2017 psi w/avg rate of 23.1 BPM. ISIP 2175 psi. Calc flush: 4914 gal. Actual flush: 4410 gal.
11/28/07	4843-4848'	**Frac B1 sands as follows:** 14207# 20/40 sand in 260 bbls Lightning 17 frac fluid. Treated @ avg press of 2112 psi w/avg rate of 23.1 BPM. ISIP 1944 psi. Calc flush: 4842 gal. Actual flush: 4343 gal.
11/28/07	4564-4579'	**Frac D1 sands as follows:** 79967# 20/40 sand in 617 bbls Lightning 17 frac fluid. Treated @ avg press of 1666 psi w/avg rate of 23.1 BPM. ISIP 1984 psi. Calc flush: 4564 gal. Actual flush: 4579 gal.
11/28/07	4081-4128'	**Frac GB6 & GB4 sands as follows:** 39102# 20/40 sand in 395 bbls Lightning 17 frac fluid. Treated @ avg press of 1725 psi w/avg rate of 23.1 BPM. ISIP 1731 psi. Calc flush: 4562 gal. Actual flush: 3990 gal.
5/5/09		**Pump Change.** Updated r & t details.
01/20/14		**Convert to Injection Well**
01/21/14		**Conversion MIT Finalized** – update tbg detail

PERFORATION RECORD

10/11/07	4081-4128'	4 JSPF	188 holes
10/11/07	4584-4598'	4 JSPF	56 holes
10/11/07	4828-4837'	4 JSPF	36 holes
10/11/07	4976-4985'	4 JSPF	36 holes
10/11/07	5236-5272'	4 JSPF	144 holes
10/11/07	5649-5658'	4 JSPF	36 holes

NEWFIELD

FEDERAL 7-19-9-16
1958'FNL & 2161' FEL
SW/NE Section 19-T9S-R16E
Duchesne Co, Utah
API #43-013-33158; Lease # UTU-64379

LCN 01/28/14

ATTACHMENT E-7

Federal 8-19-9-16

Spud Date: 10-25-07
Put on Production: 12-6-07
GL: 5984' KB: 5996'

Wellbore Diagram

SURFACE CASING

CSG SIZE: 8-5/8"
GRADE: J-55
WEIGHT: 24#
LENGTH: 7 jts. (309.39')
DEPTH LANDED: 320.29'
HOLE SIZE: 12-1/4"
CEMENT DATA: 160 sxs Class "G" cmt

PRODUCTION CASING

CSG SIZE: 5-1/2"
GRADE: J-55
WEIGHT: 15.5#
LENGTH: 150jts. (5808.14')
HOLE SIZE: 7-7/8"
DEPTH LANDED: 5808.64'
CEMENT DATA: 300 sk Prem. Lite II mixed & 400 sxs 50/50 POZ.
CEMENT TOP AT: 79'

TUBING

SIZE/GRADE/WT.: 2-7/8" / J-55 / 6.5#
NO. OF JOINTS: 174 jts (5464.5')
TUBING ANCHOR: 5464.5'
NO. OF JOINTS: 1 jts (31.40')
SEATING NIPPLE: 2-7/8" (1.10')
SN LANDED AT: 5498.7' KB
NO. OF JOINTS: 2 jts (62.90')
TOTAL STRING LENGTH: EOT @ 5563.0'

SUCKER RODS

POLISHED ROD: 1-1/2" x 26'
SUCKER RODS: 99- ¾" guided rods, 95- ¾" guided rods, 20- ¾" guided rods, 6- 1 ½" weight rods
PUMP SIZE: 2-1/2" x 1-1/2" x16' x 20' RHAC pump w/ SM plunger STROKE LENGTH: 74"
PUMP SPEED, SPM: 5.5'

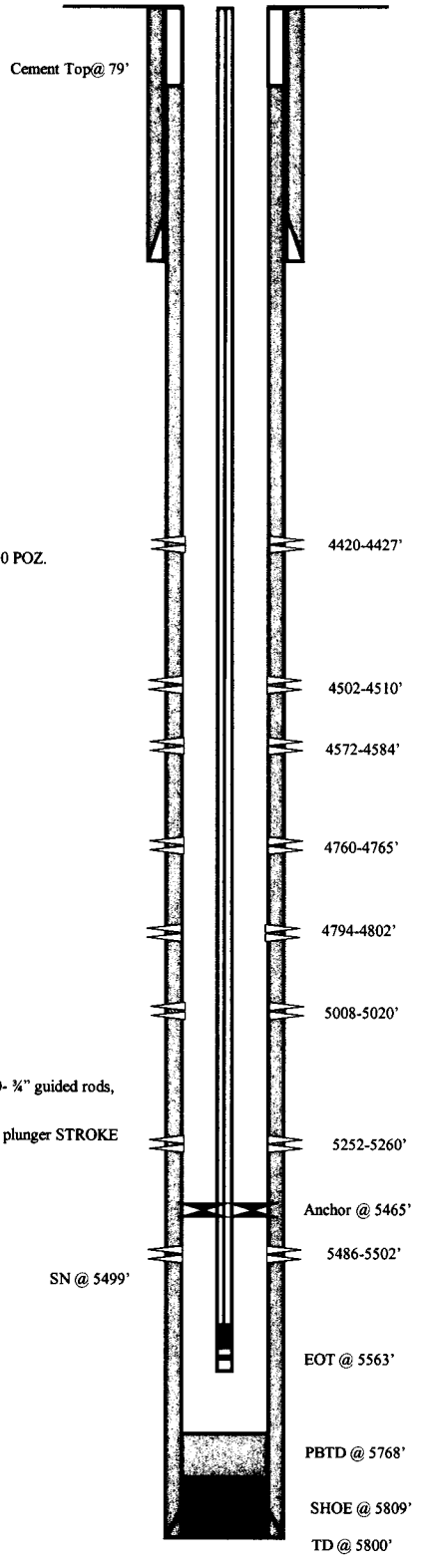

FRAC JOB

11-20-07	5486-5502'	**Frac CP3 sands as follows:** Frac with 54412# 20/40 sand in 517bbls Lightning 17 fluid. Treat at 2115 psi @ 24.8 BPM. ISIP 2280 psi.
11-20-07	5252-5260'	**Frac LODC sands as follows:** Frac with 29857# 20/40 sand in 395 bbls Lightning 17 fluid. Treat at 2503psi @ 24.8 BPM. ISIP 2588psi.
11-21-07	5008-5020'	**Frac LODC sands as follows:** Frac with 40138# 20/40 sand in 375 bbls Lightning 17 fluid. Treat at 2470psi @ 24.8 BPM. ISIP 2715 psi.
11-21-07	4572-4584'	**Frac C sand as follows:** Frac with 14617# 20/40 sand in 263 bbls Lightning 17 fluid. Treat at 2150 psi @ 24.8 BPM. ISIP 1945 psi.
11-21-07	4502-4510'	**Frac D3 sands as follows:** Frac with 34878# 20/40 sand in 496 bbls Lightning 17 fluid. Treat at 2443 psi @ 23.5 BPM. ISIP 2230 psi.
11-28-07	4420-4427'	**Frac D1 sands as follows:** Frac with 55428# 20/40 sand in 553 bbls Lightning 17 fluid. Treat at 2201 psi @ 23.9 BPM. ISIP 2142 psi.
2/12/2010		Pump change. Updated rod and tubing.

PERFORATION RECORD

4420-4427'	4 JSPF	28 holes
4502-4510'	4 JSPF	32 holes
4572-4584'	4 JSPF	48 holes
4760-4765'	4 JSPF	20 holes
4794-4802'	4 JSPF	32 holes
5008-5020'	4 JSPF	48 holes
5252-5260'	4 JSPF	32 holes
5486-5502'	4 JSPF	64 holes

NEWFIELD

Federal 8-19-9-16
2136' FNL & 785' FEL
SENE Section 19-T9S-R16E
Duchesne Co, Utah
API #43-013-33101; Lease #UTU-64379

ML 4/23/10

ATTACHMENT E-8

Spud Date: 9/27/2007
Put on Production: 1/9/2008
GL:6181' KB:6193'

Federal 10-19-9-16

Initial Production: BOPD, MCFD, BWPD

Wellbore Diagram

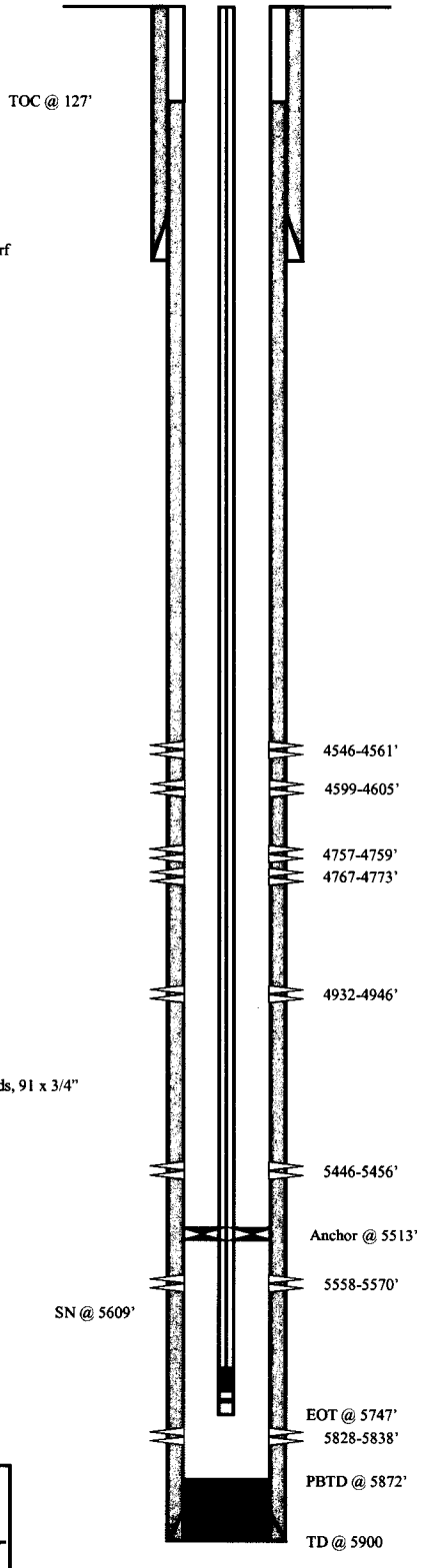

SURFACE CASING

CSG SIZE: 8-5/8"
GRADE: J-55
WEIGHT: 24#
LENGTH: 7jts (311.69')
DEPTH LANDED: 321.69'
HOLE SIZE: 12-¼'
CEMENT DATA: 160sxs of class 'G' cement, circ 2 bbls to surf

PRODUCTION CASING

CSG SIZE: 5-1/2"
GRADE: J-55
WEIGHT: 15.5#
LENGTH: 152jts (5894.79')
HOLE SIZE: 7-7/8"
DEPTH LANDED: 5883.99'
CEMENT DATA: 300sxs of Primlite II & 400sxs of 50/50 poz
CEMENT TOP AT: 127' per CBL 12/5/07

TUBING (KS 11/29/12)

SIZE/GRADE/WT.: 2-7/8" / J-55 / 6.5#
NO. OF JOINTS: 169jts (5501.0')
TUBING ANCHOR: 5513.0'
NO. OF JOINTS: 3jts (93.8')
SEATING NIPPLE: 2-7/8" (1.10')
SN LANDED AT: 5609.6'
NO. OF JOINTS: 1jt (32.7')
GAS ANCHOR: 5-1/2" (5.2')
NIPPLE: 2-7/8" (0.6')
NO. OF JOINTS: 3jts (97.6')
BULL PLUG: 2-7/8" (0.4')
TOTAL STRING LENGTH: EOT @ 5747'

SUCKER RODS (KS 11/29/12)

POLISHED ROD: 26' x 1-1/2"
SUCKER RODS: 4', 8' x ¾" Pony Rods, 99 x 3/4" Guided Rods, 91 x 3/4" Sucker Rods, 27 x 3/4" Guided Rods, 6 x 1-½" Sinker Bars
PUMP SIZE: 2-1/2" x 1-1/2" x 20' x 24' RHAC
STROKE LENGTH: 103"
PUMP SPEED, SPM: 5.0
PUMPING UNIT: DARCO C-320-256-120

FRAC JOB

12/14/07 5828'-5838'	**Frac BS sds** w/ 37,662#'s of 20/40 sand in 535 bbls of Lightning 17 fluid. Broke @ 3685 psi. Treated w/ ave pressure of 2385 psi w/ ave rate of 23.5 BPM. ISIP 2409 psi.Calc Flush: ? Actual flush: 5321 gals.
12/14/07 5558'-5570'	**Frac CP3 sds** w/ 39,505#'s of 20/40 sand in 465 bbls of Lightning 17 fluid. Broke @ 1750 psi. Treated w/ ave pressure of 2332 psi w/ ave rate of 20.6 BPM. ISIP 2282 psi.Calc flush: Actual Flush: 5048 gals.
12/14/07 5446'-5456'	**Frac CP1 sds** w/ 50,243#'s of 20/40 sand in 456 bbls of Lightning 17 fluid. Broke @ 1969 psi. Treated w/ ave pressure of 2121 psi w/ ave rate of 20.6 BPM. ISIP 2179 psi. Calc Flush:? Actual Flush: 4855 gals.
12/14/07 4546'-4561'	**Frac D1 & D2 sds** w/ 73,020#'s of 20/40 sand in 652 bbls of Lightning 17 fluid. Broke @ 1605 psi. Treated w/ ave pressure of 1792 psi w/ ave rate of 20.7 BPM. ISIP 2037 psi Calc flush: ? Actual Flush: 4460 gals.
10-1-08	Pump Change updated rod & tubing details.
10-01-10	Recompletion
9-28-10 4932-4561	Frac w/44516# of Frac A1 20/40 sand on 255bbls of lightning 17 fluid.
9-28-10 4767-4773	Frac w/50785# of Frac A1 20/40 sand on 287bbls of lightning 17 fluid

PERFORATION RECORD

12/06/07	5828-5838'	4 JSPF	40 holes
12/14/07	5558-5570'	4 JSPF	48 holes
12/14/07	5446-5456'	4 JSPF	40 holes
9/28/10	4932-4946'	4JSPF	42 holes
9/28/10	4767-4773'	4JSPF	18holes
9/28/10	4757-4759'	4JSPF	6 holes
12/14/07	4599-4605'	4 JSPF	24 holes
12/14/07	4546-4561'	4 JSPF	60 holes

NEWFIELD

Federal 10-19-9-16
1890' FSL & 2146' FEL
NW/SE Section 19-T9S-R16E
Duchesne Co, Utah
API #43-013-33159; Lease #UTU-74391

KS 1/30/13

ATTACHMENT E-9

Federal 11-19-9-16

Spud Date: 10-09-07

Put on Production: 1-8-08

GL: 6199' KB: 6211'

SURFACE CASING

CSG SIZE: 8-5/8"

GRADE: J-55

WEIGHT: 24#

LENGTH: 7 jts. (310.34')

DEPTH LANDED: 320.34'

HOLE SIZE:12-1/4"

CEMENT DATA: 160 sxs Class "G" cmt, circ. 8 bbl to surf.

PRODUCTION CASING

CSG SIZE: 5-1/2"

GRADE: J-55

WEIGHT: 15.5#

LENGTH: 152jts. (5907.45')

HOLE SIZE: 7-7/8"

DEPTH LANDED: 5905.45'

CEMENT DATA: 300 sk Prem. Lite II mixed & 450 sxs 50/50 POZ.

CEMENT TOP AT: 224' per CBL 12/14/07

TUBING

SIZE/GRADE/WT.: 2-7/8" / J-55 / 6.5#

NO. OF JOINTS: 125 jts (3939.8')

SEATING NIPPLE: 2-7/8" (1.10')

SN LANDED AT: 3951.8' KB

ON/OFF TOOL AT: 3952.9'

ARROW #1 PACKER CE AT: 3957.69'

XO 2-3/8 x 2-7/8 J-55 AT: 3961.4'

TBG PUP 2-3/8 J-55 AT: 3961.9'

X/N NIPPLE AT: 3966'

TOTAL STRING LENGTH: EOT @ 3967.6'

Injection Wellbore Diagram

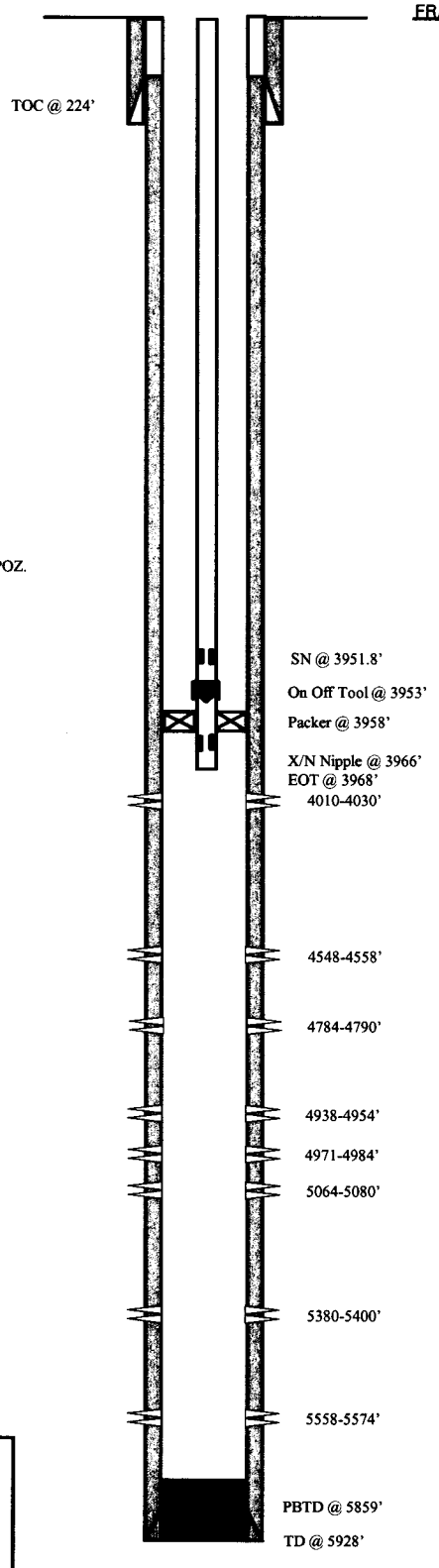

FRAC JOB

12-26-07	5558-5574'	**Frac CP2 sands as follows:** Frac with 59775# 20/40 sand in 533bbls Lightning 17 fluid. Treat at 1825 psi @ 23 BPM. ISIP 2111 psi.
12-26-07	5380-5400'	**Frac LODC sands as follows:** Frac with 59263# 20/40 sand in 528 bbls Lightning 17 fluid. Treat at 2001psi @ 23.1 BPM. ISIP 2364psi.
12-27-7	5064-5080'	**Frac LODC sands as follows:** Frac with 75331# 20/40 sand in 618 bbls Lightning 17 fluid. Treat at 2507 psi @ 29.1 BPM. ISIP 2905 psi.
12-27-07	4938-4984'	**Frac A3 &A1 sand as follows:** Frac with 110221# 20/40 sand in 881 bbls Lightning 17 fluid. Treat at 1743 psi @ 23 BPM. ISIP 2079 psi.
12-27-07	4784-4790'	**Frac B.5 sands as follows:** Frac with20091# 20/40 sand in 301 bbls Lightning 17 fluid. Treat at 2034 psi @ 23 BPM. ISIP 2027 psi.
12-27-07	4548-4558'	**Frac D1 sands as follows:** Frac with 50552# 20/40 sand in 442 bbls Lightning 17 fluid. Treat at 1639 psi @ 23.1 BPM. ISIP 2088 psi.
12-27-07	4010-4030'	**Frac GB4 sands as follows:** Frac with 44039# 20/40 sand in 416 bbls Lightning 17 fluid. Treat at 1391 psi @ 23 BPM. ISIP 1434 psi.
9-16-08		**Parted rod**. Updated rod & tubing details.
6/15/09		**Tubing Leak**. Updated r & t details.
09/04/13		**Convert to Injection Well**
09/05/13		**Conversion MIT Finalized** – update tbg detail

PERFORATION RECORD

4010-4030'	4 JSPF	80 holes
4548-4558'	4 JSPF	40 holes
4784-4790'	4 JSPF	24 holes
4938-4954'	4 JSPF	64 holes
4971-4984'	4 JSPF	52 holes
5064-5080'	4 JSPF	64 holes
5380-5400'	4 JSPF	80 holes
5558-5574'	4 JSPF	64 holes

NEWFIELD

Federal 11-19-9-16
1778' FSL & 2197' FWL
NESW Section 19-T9S-R16E
Duchesne Co, Utah
API #43-013-33160; Lease #UTU-74391

LCN 09/11/13

ATTACHMENT E-10

FEDERAL 12-19-9-16

Spud Date: 05/04/07
Put on Production: 03/28/07

GL: 6024' KB: 6036'

Wellbore Diagram

Initial Production: BOPD, MCFD, BWPD

SURFACE CASING

CSG SIZE: 8-5/8"
GRADE: J-55
WEIGHT: 24#
LENGTH: 7 jts. (312.23')
DEPTH LANDED: 324.08' KB
HOLE SIZE:12-1/4"
CEMENT DATA: 160 sxs Class "G" cmt, est 3 bbls cmt to surf.

PRODUCTION CASING

CSG SIZE: 5-1/2"
GRADE: J-55
WEIGHT: 15.5#
LENGTH: 131 jts. (5741.84')
DEPTH LANDED: 5744.09' KB
HOLE SIZE: 7-7/8"
CEMENT DATA: 325 sxs Prem. Lite II mixed & 451 sxs 50/50 POZ.

TUBING

SIZE/GRADE/WT.: 2-7/8" / J-55 / 6.5#
NO. OF JOINTS: 148 jts (4724.60')
TUBING ANCHOR: 4736.60' KB
NO. OF JOINTS: 1 jts (31.37')
SEATING NIPPLE: 2-7/8" (1.10')
SN LANDED AT: 4770.77' KB
NO. OF JOINTS: 2 jts (63.07')
TOTAL STRING LENGTH: EOT @ 4835.39' KB

SUCKER RODS

POLISHED ROD: 1-1/2" x 26' SM polished rods
SUCKER RODS:1-6' & 1- 8' x 3/4" pony rods, 99-3/4" guided rods, 75-3/4" plain rods, 10-3/4" guided rods, 6-1 ½" weight rods.
PUMP SIZE: CDI 2-1/2" x 1-1/2" x 20'RHAC
STROKE LENGTH: 102"
PUMP SPEED, 5 SPM:

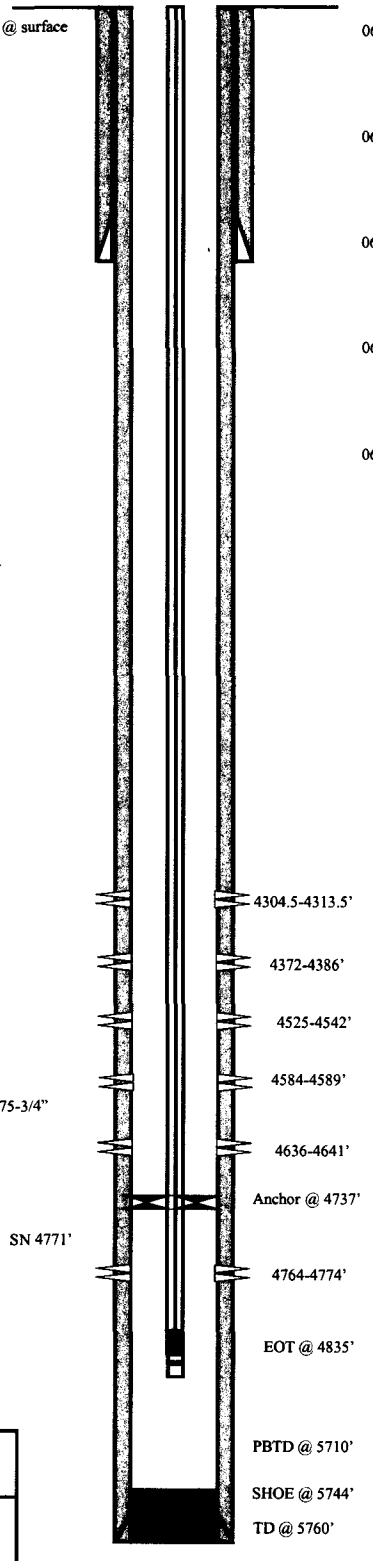

FRAC JOB

06/06/07 4764-4774' **Frac A1 sands as follows:** 49572# 20/40 sand in 420 bbls Lightning 17 frac fluid. Treated @ avg press of 2181 psi w/avg rate of 24.7 BPM. ISIP 2446 psi. Calc flush: 4762 gal. Actual flush: 4301 gal.

06/06/07 4636-4584' **Frac B2 & B1 sands as follows:** 14528# 20/40 sand in 232 bbls Lightning 17 frac fluid. Treated @ avg press of 2162 psi w/avg rate of 24.7 BPM. ISIP 1790 psi. Calc flush: 4634 gal. Actual flush: 4141 gal.

06/06/07 4525-4542' **Frac C sands as follows:** 99094# 20/40 sand in 695 bbls Lightning 17 frac fluid. Treated @ avg press of 2017 psi w/avg rate of 24.7 BPM. ISIP 2342 psi. Calc flush: 4523 gal. Actual flush: 4040 gal.

06/06/07 4372-4386' **Frac D1 sands as follows:** 93828# 20/40 sand in 683 bbls Lightning 17 frac fluid. Treated @ avg press of 1800 psi w/avg rate of 24.7 BPM. ISIP 2241 psi. Calc flush: 4370 gal. Actual flush: 3919 gal

06/06/07 4304.5-4313.5' **Frac DS3 sands as follows:** 17586# 20/40 sand in 243 bbls Lightning 17 frac fluid. Treated @ avg press of 2345 psi w/avg rate of 24.7 BPM. ISIP 2607 psi. Calc flush: 4302.5 gal. Actual flush: 4242 gal

PERFORATION RECORD

06/06/07	4764-4774'	4 JSPF	40 holes
06/06/07	4636-4641'	4 JSPF	20 holes
06/06/07	4584-4589'	4 JSPF	20 holes
06/06/07	4525-4542'	4 JSPF	68 holes
06/06/07	4372-4386'	4 JSPF	56 holes
06/06/07	4304.5-4313.5'	4 JSPF	36 holes

NEWFIELD

FEDERAL 12-19-9-16

1903'FSL & 791' FWL

NWSW Section 19-T9S-R16E

Duchesne Co, Utah

API #43-013-33102; Lease # UTU-74391

TW 04/18/07

ATTACHMENT E-11

Federal 1-24-9-16

Spud Date: 10-10-07
Put on Production: 11-5-07
GL: 5535' KB: 5547'

Injection Wellbore Diagram

SURFACE CASING

CSG SIZE: 8-5/8"
GRADE: J-55
WEIGHT: 24#
LENGTH: 7 jts. (311.69')
DEPTH LANDED: 323.45'
HOLE SIZE: 12-1/4"
CEMENT DATA: 160 sxs Class "G" cmt

PRODUCTION CASING

CSG SIZE: 5-1/2"
GRADE: J-55
WEIGHT: 15.5#
LENGTH: 148jts. (55748.15')
HOLE SIZE: 7-7/8"
DEPTH LANDED: 5761.4'
CEMENT DATA: 300 sk Prem. Lite II mixed & 400 sxs 50/50 POZ.
CEMENT TOP AT: 49'

TUBING

SIZE/GRADE/WT.: 2-7/8" / J-55 / 6.5#
NO. OF JOINTS: 169 jts (3886.1')
SEATING NIPPLE: 2-7/8" (1.10')
SN LANDED AT: 3886' KB
ON/OFF TOOL AT: 3887.2'
ARROW #1 PACKER CE AT: 3892'
XO 2-3/8 x 2-7/8 J-55 AT: 3895.9'
TBG PUP 2-3/8 J-55 AT: 3896.4'
X/N NIPPLE AT: 3900.5'
TOTAL STRING LENGTH: EOT @ 3902'

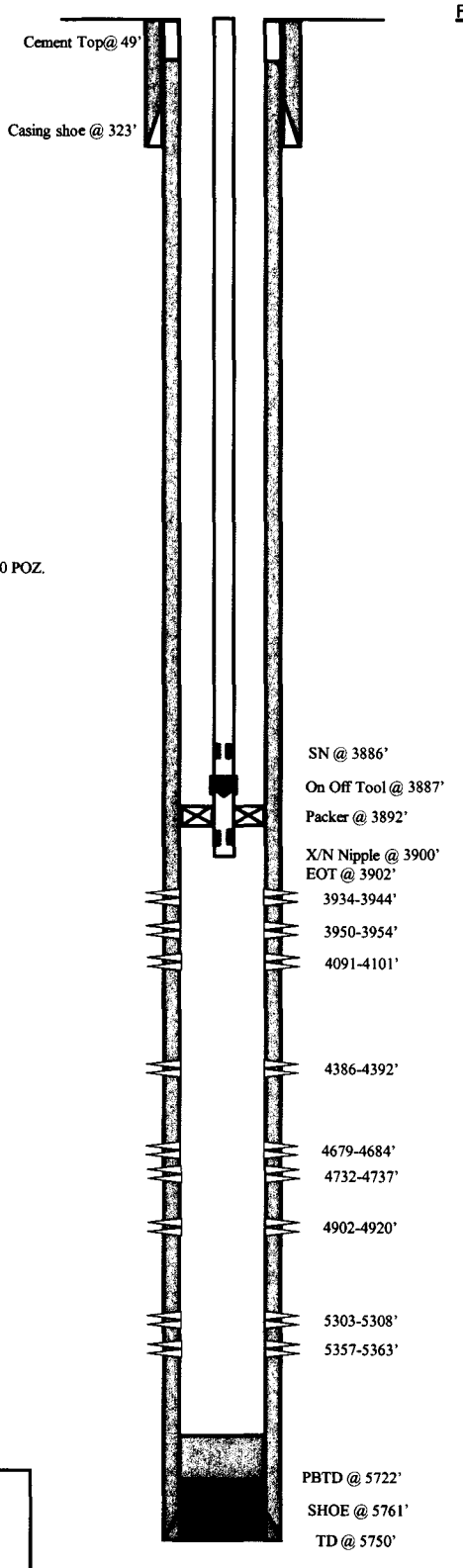

FRAC JOB

10-31-07	5303-5363'	**Frac CP 1&2 sands as follows:** Frac with 14554# 20/40 sand in 285 bbls Lightning 17 fluid. Treat at 2420 psi @ 24.8 BPM. ISIP 2020 psi.
10-31-07	4902-4920'	**Frac A3 sands as follows:** Frac with 89906# 20/40 sand in 691 bbls Lightning 17 fluid. Treat at 2070psi @ 24.8 BPM. ISIP 1785psi.
10-31-07	4386-4392'	**Frac DS3 sands as follows:** Frac with 25051# 20/40 sand in 339 bbls Lightning 17 fluid. Treat at 21300psi @ 24.8 BPM. ISIP 1920 psi.
10-31-07	4091-4101'	**Frac PB8 sand as follows:** Frac with 62099# 20/40 sand in 499 bbls Lightning 17 fluid. Treat at 2028 psi @ 24.8 BPM. ISIP 2110 psi.
11/26/12	3934-3954'	**Frac GB6 sand as follows:** Frac with 39227# 20/40 sand in 429 bbls Lightning 17 fluid.
11/27/2012		**Convert to Injection Well**
11/29/2012		**Conversion MIT Finalized** – update tbg detail

PERFORATION RECORD

4091-4101'	4 JSPF	40 holes	
4386-4392'	4 JSPF	24 holes	
4679-4684'	4 JSPF	20 holes	
4732-4737'	4 JSPF	20 holes	
4902-4920'	4 JSPF	72 holes	
5303-5308'	4 JSPF	20 holes	
5357-5363'	4 JSPF	24 holes	
3934-3944'	3 JSPF	30 holes	11/21/12
3950-3954'	3 JSPF	12 holes	11/21/12

NEWFIELD

Federal 1-24-9-16
537' FNL & 671' FEL
NENE Section 24-T9S-R16E
Duchesne Co, Utah
API #43-013-33082; Lease #UTU-15855

LCN 12/05/12

Attachment E-12

Ashley Federal 8-24-9-15

Spud Date: 7-5-06
Put on Production: 9-1-06
GL: 6201' KB: 6213'

Wellbore Diagram

Initial Production: BOPD, MCFD, BWPD

SURFACE CASING

CSG SIZE: 8-5/8"
GRADE: J-55
WEIGHT: 24#
LENGTH: 7 jts (309.21')
DEPTH LANDED: 321.06' KB
HOLE SIZE:12-1/4"
CEMENT DATA: 160 sxs Class "G" cmt, est 5 bbls cmt to surf.

PRODUCTION CASING

CSG SIZE: 5-1/2"
GRADE: J-55
WEIGHT: 15.5#
LENGTH: 135 jts. (5918.43')
DEPTH LANDED: 5931.68' KB
HOLE SIZE: 7-7/8"
CEMENT DATA: 300 sxs Prem. Lite II mixed & 450 sxs 50/50 POZ.
CEMENT TOP AT: 350'

TUBING

SIZE/GRADE/WT.: 2-7/8" / J-55 / 6.5#
NO. OF JOINTS: 165 jts (5559.84')
TUBING ANCHOR: 5239.99' KB
NO. OF JOINTS: 1 jts (31.74')
SEATING NIPPLE: 2-7/8" (1.10')
SN LANDED AT: 5274.53' KB
NO. OF JOINTS: 2 jts (63.37')
TOTAL STRING LENGTH: EOT @ 5339.45' KB

SUCKER RODS

POLISHED ROD: 1-1/2" x 22' SM
SUCKER RODS: 1-8', 1-6', 2-4', & 1-2' X ¾" pony rods, 99- ¾" scrapered rods, 94- ¾" plain rods, 10-3/4" scrapered rods, 6-1 ½" weight rods.
PUMP SIZE: 2-1/2" x 1-1/2" x 15' RHAC w/SM plunger
STROKE LENGTH: 86"
PUMP SPEED, SPM: 5 SPM

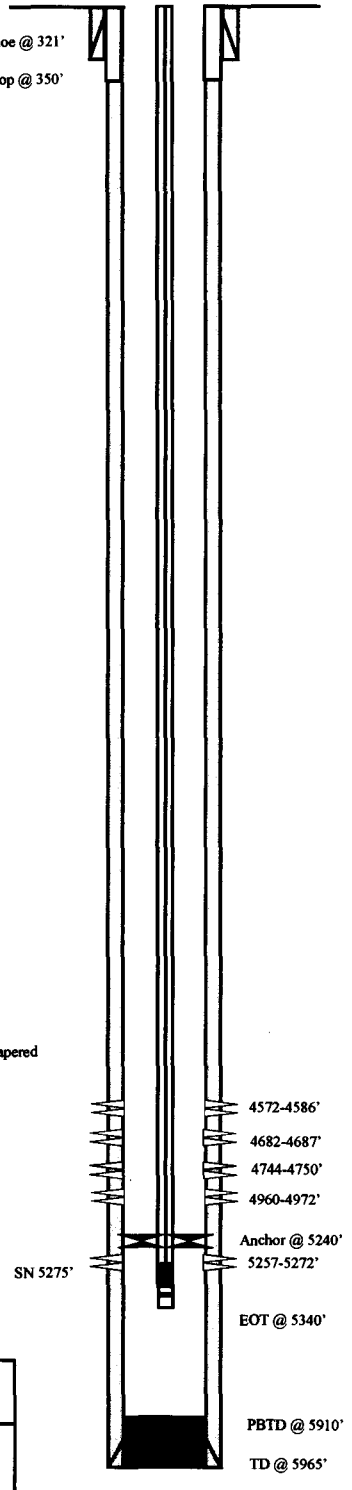

FRAC JOB

08-29-06 5257-5272' **Frac LODC sands as follows:** 40499# 20/40 sand in 430 bbls Lightning 17 frac fluid. Treated @ avg press of 2365 psi w/avg rate of 25 BPM. ISIP 2475 psi. Calc flush: 5255 gal. Actual flush: 4746 gal.

08-29-06 4960-4972' **Frac A1 sands as follows:** 70637# 20/40 sand in 522 bbls Lightning 17 frac fluid. Treated @ avg press of 1895 psi w/avg rate of 25 BPM. ISIP 1950 psi. Calc flush: 4958 gal. Actual flush: 4444 gal.

08-29-06 4682-4750' **Frac C, & D3 sands as follows:** 34614# 20/40 sand in 374 bbls Lightning 17 frac fluid. Treated @ avg press of 2035psi w/avg rate of 24.9 BPM. ISIP 1750 psi. Calc flush: 4680 gal. Actual flush: 4162 gal.

08-29-06 4572-4586' **Frac D1 sands as follows:** 75771# 20/40 sand in 562 bbls Lightning 17 frac fluid. Treated @ avg press of 1955 w/ avg rate of 25 BPM. ISIP 2025 psi. Calc flush: 4570 gal. Actual flush: 4440 gal.

PERFORATION RECORD

08-16-06	5257-5272'	4 JSPF	60 holes
08-29-06	4960-4972'	4 JSPF	48 holes
08-29-06	4744-4750'	4 JSPF	24 holes
08-29-06	4682-4687'	4 JSPF	20 holes
08-29-06	4572-4586'	4 JSPF	56 holes

NEWFIELD

Ashley Federal 8-24-9-15
2130' FNL & 584' FEL
SE/NE Section 24-T9S-R15E
Duchesne Co, Utah
API # 43-013-32818; Lease # UTU-02458

TR 10-10-2006

NEWFIELD

Schematic

43-013-52420

Well Name: GMBU K-24-9-15

Surface Legal Location	API/UWI	Well RC	Lease	State/Province	Field Name	County
SWNW Lot 2 1834 FNL 481 FWL Sec 19 T9S R16E	43013524200000	500366861	UTU64379	Utah	GMBU CTB3	Duchesne

Spud Date	Rig Release Date	On Production Date	Original KB Elevation (ft)	Ground Elevation (ft)	Total Depth All (TVD) (ftKB)	PBTD (All) (ftKB)
4/15/2014	4/26/2014	5/20/2014	6,194	6,184	Original Hole - 6,018.1	Original Hole - 6,157.0

Most Recent Job

Job Category	Primary Job Type	Secondary Job Type	Job Start Date	Job End Date
Initial Completion	Fracture Treatment	P&P	5/9/2014	5/20/2014

TD: 6,168.0

Slant - Original Hole, 6/24/2014 1:05:18 PM

MD (ftKB)	TVD (ftKB)	Incl (°)
2.0	2.0	0.8
10.8	10.8	0.8
13.8	13.8	0.8
21.0	21.0	0.8
34.1	34.1	0.8
47.9	47.9	0.8
273.0	273.0	0.8
317.6	317.6	0.8
324.1	324.1	0.8
3,148.0	3,085.7	16.2
3,366.8	3,295.7	16.2
4,835.0	4,720.9	13.7
4,886.2	4,770.6	13.9
5,056.1	4,935.7	13.5
5,359.9	5,231.5	13.0
5,515.1	5,383.3	11.7
5,581.0	5,447.8	12.6
5,688.0	5,551.9	14.1
5,702.1	5,565.5	14.2
6,015.1	5,869.6	13.7
6,043.0	5,896.6	13.7
6,047.9	5,901.4	13.7
6,049.9	5,903.3	13.7
6,051.8	5,905.3	13.7
6,058.1	5,911.3	13.7
6,065.9	5,919.0	13.7
6,069.9	5,922.8	13.7
6,075.1	5,927.9	13.7
6,081.0	5,933.6	13.7
6,084.6	5,937.1	13.7
6,117.5	5,969.0	13.7
6,157.2	6,007.6	13.7
6,163.7	6,013.9	13.7

DLS (°... 0 — 3

Vertical schematic (actual)

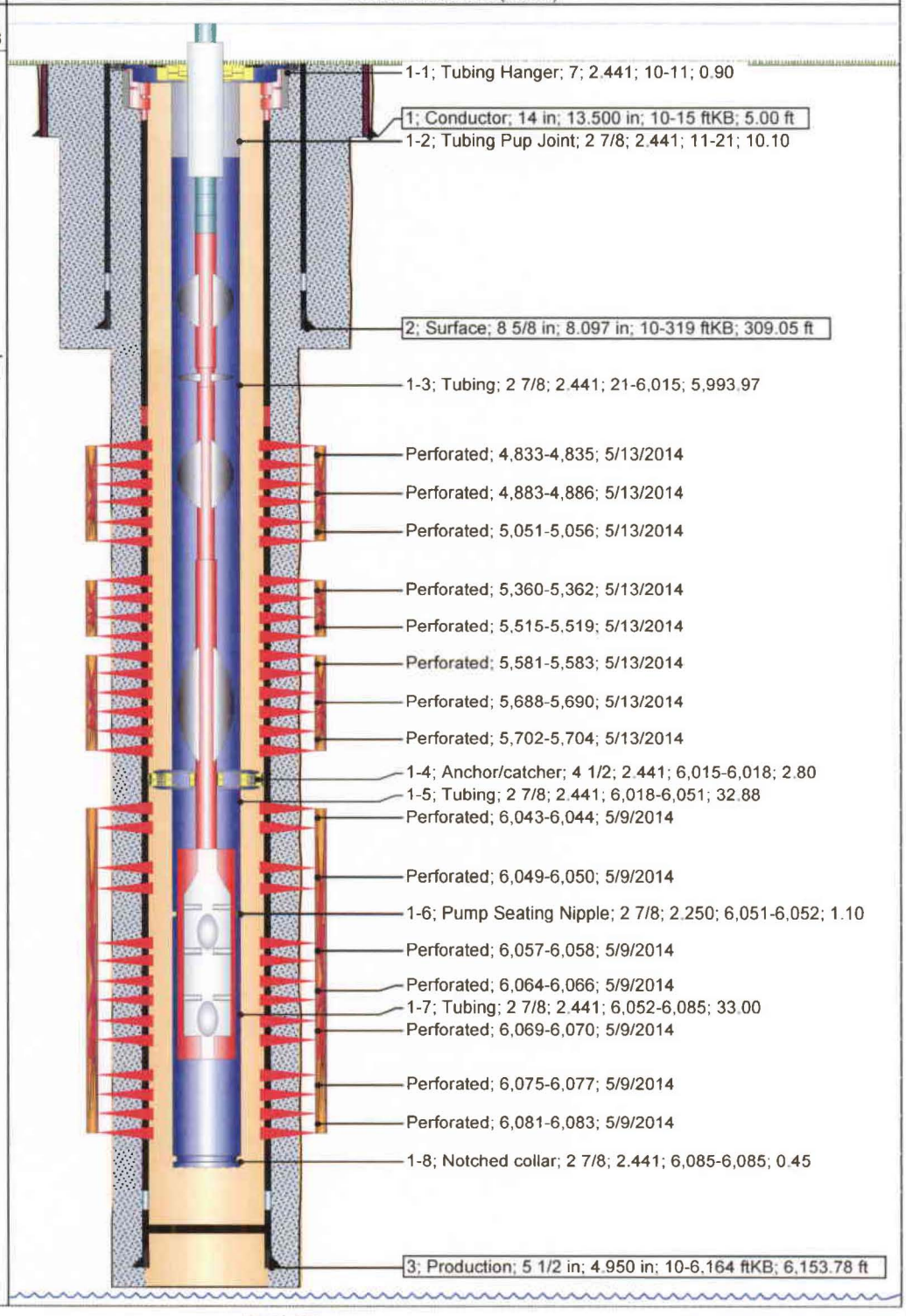

NEWFIELD

Schematic

43-013-52421

Well Name: GMBU J-24-9-15

Surface Legal Location	API/UWI	Well RC	Lease	State/Province	Field Name	County
SWNW Lot 2 1831 FNL 502 FWL Sec 19 T9S R16E	43013524210000	500366851	UTU64379	Utah	GMBU CTB3	Duchesne

Spud Date	Rig Release Date	On Production Date	Original KB Elevation (ft)	Ground Elevation (ft)	Total Depth All (TVD) (ftKB)	PBTD (All) (ftKB)
4/14/2014	4/23/2014		6,194	6,184	Original Hole - 6,127.2	Original Hole - 6,172.9

Most Recent Job

Job Category	Primary Job Type	Secondary Job Type	Job Start Date	Job End Date
Initial Completion	Fracture Treatment	P&P	5/9/2014	5/15/2014

TD: 6,207.0

Slant - Original Hole, 6/24/2014 1:06:23 PM

MD (ftKB)	TVD (ftKB)	Incl (°)
0.0	0.0	1.1
	2.0	
9.8	9.9	1.1
	10.2	
10.8	10.9	1.1
	12.2	
14.1	14.1	1.1
	15.1	
32.2	32.2	1.1
	34.2	
40.0	40.1	1.1
	47.9	
54.1	54.2	1.1
	272.6	
273.6	273.6	1.1
	316.9	
318.2	318.2	1.1
	323.1	
1,823.2	1,810.7	11.1
	3,347.5	
3,401.9	3,358.5	9.9
	3,404.1	
3,948.2	3,898.0	9.8
	4,616.1	
4,680.1	4,620.3	9.8
	4,784.1	
4,848.1	4,786.1	9.2
	4,888.7	
4,956.0	4,892.6	9.4
	4,983.2	
5,516.1	5,444.4	8.6
	5,448.3	
5,713.3	5,638.7	10.1
	5,641.3	
5,748.0	5,672.9	10.1
	5,673.9	
5,750.0	5,674.9	10.1
	5,690.7	
5,768.0	5,692.6	10.2
	5,696.5	
5,774.0	5,698.4	10.2
	5,700.4	
5,783.1	5,707.5	10.1
	5,711.4	
5,804.1	5,728.2	9.8
	5,793.2	
5,870.7	5,793.8	9.4
	6,093.0	
6,172.9	6,093.3	7.0
	6,094.6	
6,195.9	6,116.1	7.0
	6,116.8	
6,207.0	6,127.2	7.0

DLS (°... 0 —— 4

Vertical schematic (actual)

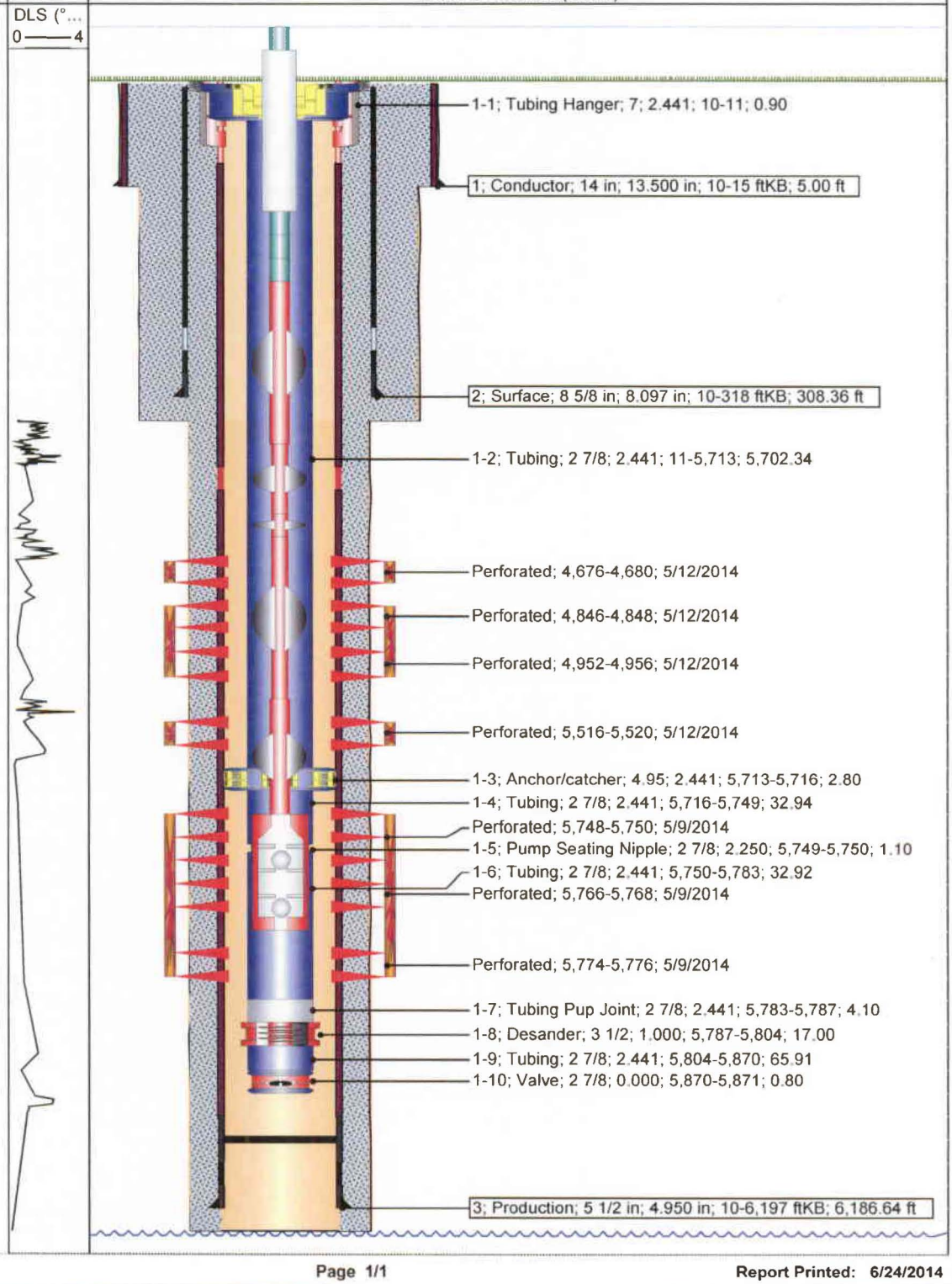

NEWFIELD

Schematic

43-013-52461

Well Name: GMBU C-19-9-16

Surface Legal Location	API/UWI	Well RC	Lease	State/Province	Field Name	County
SWSE 650 FSL 2350 FEL Sec 18 T9S R16E	43013524610000	500366659	UTU64379	Utah	GMBU CTB3	Duchesne

Spud Date	Rig Release Date	On Production Date	Original KB Elevation (ft)	Ground Elevation (ft)	Total Depth All (TVD) (ftKB)	PBTD (All) (ftKB)
4/2/2014	4/14/2014	5/5/2014	6,060	6,050	Original Hole - 5,935.6	Original Hole - 6,000.7

Most Recent Job

Job Category	Primary Job Type	Secondary Job Type	Job Start Date	Job End Date
Initial Completion	Fracture Treatment	P&P	4/28/2014	5/5/2014

TD: 6,030.0 Slant - Original Hole, 6/24/2014 1:10:04 PM

MD (ftKB)	TVD (ftKB)	Incl (°)
-1.0	-1.0	0.7
10.2	10.2	0.7
12.1	12.1	0.7
29.2	29.2	0.7
37.1	37.1	0.7
54.1	54.1	0.7
274.9	274.9	0.9
320.2	320.2	1.2
1,648.3	1,641.9	10.0
3,378.0	3,330.7	13.1
4,100.1	4,036.6	11.0
4,138.1	4,074.0	11.4
4,179.1	4,114.2	11.2
4,631.9	4,559.3	9.9
4,645.0	4,572.2	10.0
4,712.9	4,639.0	11.0
4,728.0	4,653.8	11.2
4,779.9	4,704.6	11.7
4,789.0	4,713.6	11.6
5,021.0	4,941.5	9.9
5,029.9	4,950.3	9.9
5,200.1	5,118.3	9.0
5,279.9	5,197.1	9.1
5,308.1	5,224.9	10.0
5,551.8	5,464.4	10.5
5,672.9	5,583.5	10.3
5,706.4	5,616.4	10.2
5,709.0	5,619.0	10.2
5,711.9	5,621.9	10.2
5,775.9	5,684.9	10.1
6,000.7	5,906.6	8.7
6,024.6	5,930.3	8.7
6,029.9	5,935.4	8.7

DLS (°... 0 — 4

Vertical schematic (actual)

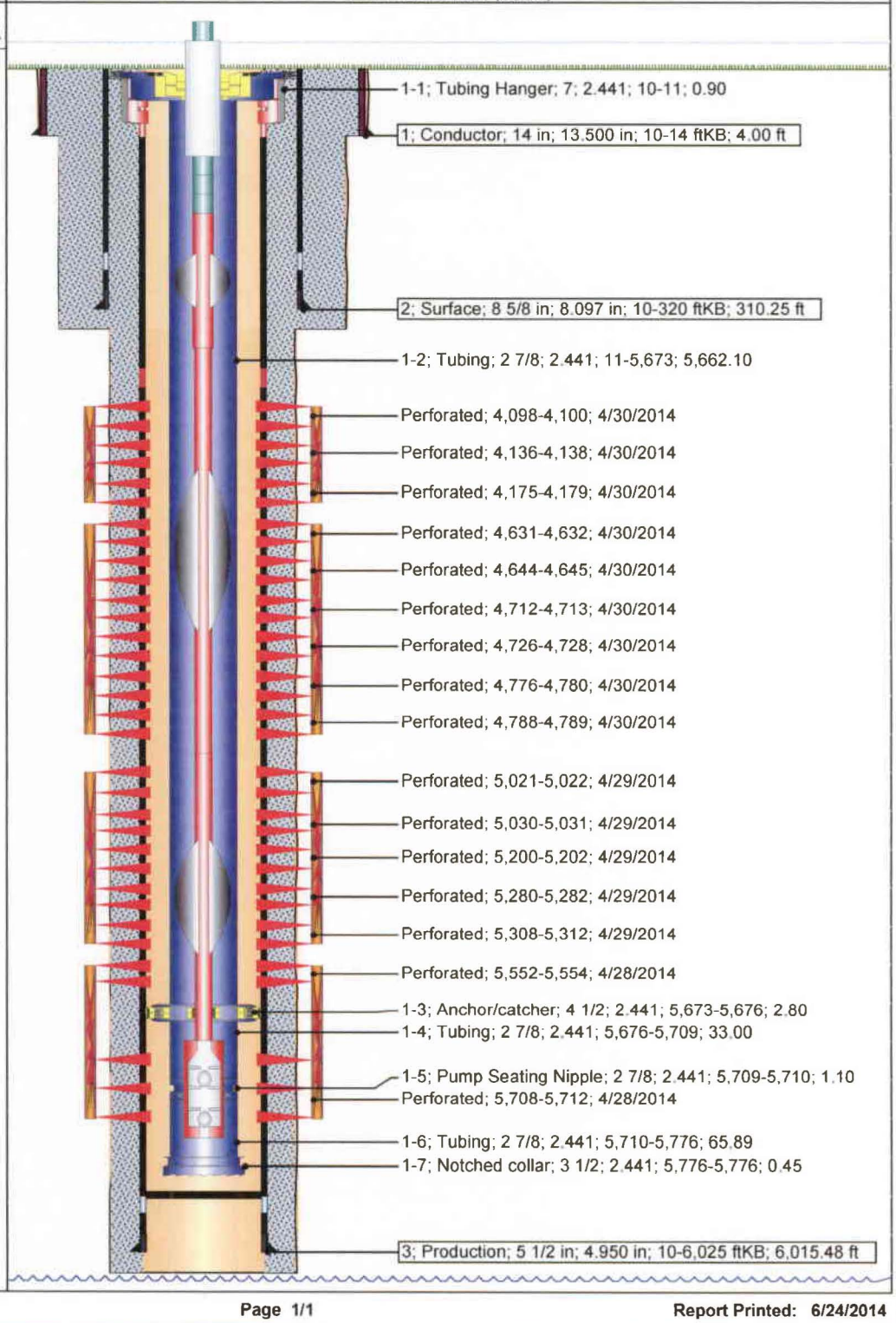

NEWFIELD

Schematic

43-013-52468

Well Name: GMBU X-18-9-16

Surface Legal Location	API/UWI	Well RC	Lease	State/Province	Field Name	County
SWSW Lot 4 668 FSL 385 FWL Sec 18 T9S R16E	43013524680000	500346429	UTU64379	Utah	GMBU CTB3	Duchesne

Spud Date	Rig Release Date	On Production Date	Original KB Elevation (ft)	Ground Elevation (ft)	Total Depth All (TVD) (ftKB)	PBTD (All) (ftKB)
3/24/2014	4/4/2014	4/23/2014	6,141	6,131	Original Hole - 6,070.8	Original Hole - 6,159.3

Most Recent Job

Job Category	Primary Job Type	Secondary Job Type	Job Start Date	Job End Date
Initial Completion	Fracture Treatment	P&P	4/16/2014	4/23/2014

TD: 6,200.0 Slant - Original Hole, 6/24/2014 1:07:18 PM

MD (ftKB)	TVD (ftKB)	Incl (°)
0.0	0.0	0.2
10.2	10.2	0.2
12.1	12.1	0.2
15.1	15.1	0.2
32.2	32.2	0.2
273.6	273.6	0.2
279.9	279.9	0.2
319.9	319.9	0.2
1,857.0	1,833.1	13.6
3,451.8	3,388.5	13.0
4,091.9	4,014.3	12.5
4,155.8	4,076.7	12.5
4,165.0	4,085.7	12.5
4,175.9	4,096.3	12.6
4,211.9	4,131.5	12.7
4,232.0	4,151.0	12.8
4,713.9	4,620.3	12.9
4,958.0	4,858.2	12.8
4,992.1	4,891.5	12.6
5,005.9	4,904.9	12.4
5,506.9	5,393.9	13.2
5,629.9	5,514.0	12.1
5,646.0	5,529.7	12.0
5,796.9	5,677.0	12.9
5,824.1	5,703.5	12.8
5,908.1	5,785.5	12.2
5,913.1	5,790.4	12.2
5,946.2	5,822.8	12.1
5,956.0	5,832.4	12.1
5,984.3	5,860.0	12.1
6,067.3	5,941.1	12.5
6,159.4	6,031.2	12.0
6,182.4	6,053.6	12.0
6,200.1	6,070.9	12.0

DLS (°... 0 —— 3

Vertical schematic (actual)

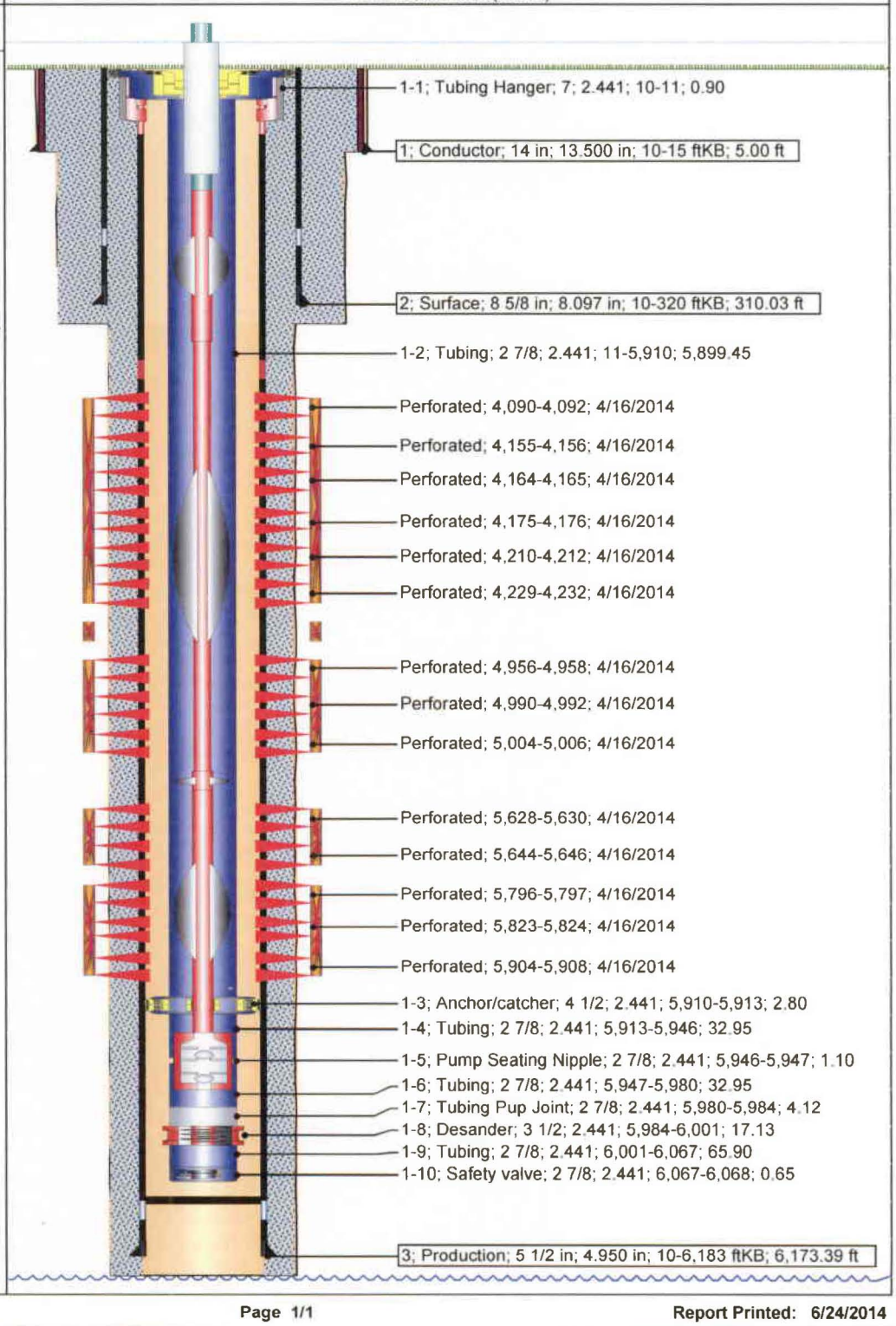

ATTACHMENT F

1 of 6

Multi-Chem Analytical Laboratory
1553 East Highway 40
Vernal, UT 84078

multi-chem
A HALLIBURTON SERVICE

Units of Measurement: **Standard**

Water Analysis Report

Production Company:	**NEWFIELD PRODUCTION**	Sales Rep:	**Michael McBride**
Well Name:	**Federal 6-19-9-16**	Lab Tech:	**Gary Winegar**
Sample Point:	**Separator-Jill**		
Sample Date:	**9/16/2013**		
Sample ID:	**WA-253934**		

Scaling potential predicted using ScaleSoftPitzer from Brine Chemistry Consortium (Rice University)

Sample Specifics	
Test Date:	9/23/2013
System Temperature 1 (°F):	120
System Pressure 1 (psig):	60
System Temperature 2 (°F):	210
System Pressure 2 (psig):	60
Calculated Density (g/ml):	1.006
pH:	9.00
Calculated TDS (mg/L):	13345.16
CO2 in Gas (%):	
Dissolved CO_2 (mg/L)):	0.00
H_2S in Gas (%):	
H2S in Water (mg/L):	5.00

Analysis @ Properties in Sample Specifics			
Cations	*mg/L*	*Anions*	*mg/L*
Sodium (Na):	3982.00	Chloride (Cl):	8000.00
Potassium (K):	218.00	Sulfate (SO_4):	121.00
Magnesium (Mg):	4.40	Bicarbonate (HCO_3):	976.00
Calcium (Ca):	18.30	Carbonate (CO_3):	
Strontium (Sr):	5.40	Acetic Acid (CH_3COO)	
Barium (Ba):	5.60	Propionic Acid (C_2H_5COO)	
Iron (Fe):	4.50	Butanoic Acid (C_3H_7COO)	
Zinc (Zn):	0.60	Isobutyric Acid ($(CH_3)_2CHCOO$)	
Lead (Pb):	0.70	Fluoride (F):	
Ammonia NH_3:		Bromine (Br):	
Manganese (Mn):	0.10	Silica (SiO_2):	8.56

Notes:
B=5.3 Al=.07 Li=1.6

(PTB = Pounds per Thousand Barrels)

		Calcium Carbonate		Barium Sulfate		Iron Sulfide		Iron Carbonate		Gypsum CaSO4·2H2O		Celestite SrSO4		Halite NaCl		Zinc Sulfide	
Temp (°F)	PSI	SI	PTB	SI	PTB	SI	PTB	SI	PTB	SI	PTB	SI	PTB	SI	PTB	SI	PTB
210.00	60.00	1.72	15.63	0.80	2.79	3.63	2.48	3.07	3.27	0.00	0.00	0.00	0.00	0.00	0.00	9.58	0.31
200.00	60.00	1.68	15.59	0.81	2.81	3.63	2.48	3.03	3.27	0.00	0.00	0.00	0.00	0.00	0.00	9.67	0.31
190.00	60.00	1.64	15.55	0.83	2.83	3.63	2.48	2.99	3.27	0.00	0.00	0.00	0.00	0.00	0.00	9.77	0.31
180.00	60.00	1.60	15.50	0.85	2.85	3.64	2.48	2.95	3.27	0.00	0.00	0.00	0.00	0.00	0.00	9.88	0.31
170.00	60.00	1.56	15.46	0.88	2.88	3.65	2.48	2.91	3.27	0.00	0.00	0.00	0.00	0.00	0.00	9.99	0.31
160.00	60.00	1.52	15.40	0.91	2.92	3.66	2.48	2.86	3.27	0.00	0.00	0.00	0.00	0.00	0.00	10.11	0.31
150.00	60.00	1.49	15.35	0.95	2.95	3.68	2.48	2.81	3.27	0.00	0.00	0.00	0.00	0.00	0.00	10.23	0.31
140.00	60.00	1.45	15.30	0.99	2.99	3.71	2.48	2.76	3.27	0.00	0.00	0.00	0.00	0.00	0.00	10.36	0.31
130.00	60.00	1.42	15.24	1.04	3.02	3.74	2.48	2.71	3.27	0.00	0.00	0.00	0.00	0.00	0.00	10.50	0.31
120.00	60.00	1.39	15.19	1.10	3.06	3.78	2.48	2.66	3.27	0.00	0.00	0.00	0.00	0.00	0.00	10.66	0.31

ATTACHMENT F

2 of 6

Multi-Chem Analytical Laboratory
1553 East Highway 40
Vernal, UT 84078

multi-chem
A HALLIBURTON SERVICE

Water Analysis Report

		Hemihydrate CaSO4~0.5H2O		Anhydrate CaSO4		Calcium Fluoride		Zinc Carbonate		Lead Sulfide		Mg Silicate		Ca Mg Silicate		Fe Silicate	
Temp (°F)	PSI	SI	PTB	SI	PTB	SI	PTB	SI	PTB	SI	PTB	SI	PTB	SI	PTB	SI	PTB
210.00	60.00	0.00	0.00	0.00	0.00	0.00	0.00	2.28	0.40	10.71	0.28	6.77	8.64	3.40	5.30	13.17	3.50
200.00	60.00	0.00	0.00	0.00	0.00	0.00	0.00	2.21	0.40	10.87	0.28	6.44	8.60	3.21	5.27	12.96	3.50
190.00	60.00	0.00	0.00	0.00	0.00	0.00	0.00	2.14	0.40	11.04	0.28	6.09	8.55	3.02	5.23	12.75	3.50
180.00	60.00	0.00	0.00	0.00	0.00	0.00	0.00	2.06	0.40	11.22	0.28	5.74	8.47	2.83	5.18	12.52	3.50
170.00	60.00	0.00	0.00	0.00	0.00	0.00	0.00	1.98	0.40	11.41	0.28	5.38	8.37	2.63	5.12	12.29	3.50
160.00	60.00	0.00	0.00	0.00	0.00	0.00	0.00	1.89	0.40	11.61	0.28	5.01	8.25	2.42	5.04	12.06	3.50
150.00	60.00	0.00	0.00	0.00	0.00	0.00	0.00	1.79	0.40	11.82	0.28	4.63	8.09	2.22	4.93	11.82	3.50
140.00	60.00	0.00	0.00	0.00	0.00	0.00	0.00	1.68	0.40	12.05	0.28	4.24	7.89	2.01	4.79	11.59	3.50
130.00	60.00	0.00	0.00	0.00	0.00	0.00	0.00	1.58	0.39	12.28	0.28	3.85	7.63	1.80	4.62	11.35	3.50
120.00	60.00	0.00	0.00	0.00	0.00	0.00	0.00	1.46	0.39	12.53	0.28	3.46	7.33	1.59	4.41	11.12	3.50

These scales have positive scaling potential under initial temperature and pressure: Calcium Carbonate Barium Sulfate Iron Sulfide Iron Carbonate Zinc Sulfide Zinc Carbonate Lead Sulfide Mg Silicate Ca Mg Silicate Fe Silicate

These scales have positive scaling potential under final temperature and pressure: Calcium Carbonate Barium Sulfate Iron Sulfide Iron Carbonate Zinc Sulfide Zinc Carbonate Lead Sulfide Mg Silicate Ca Mg Silicate Fe Silicate

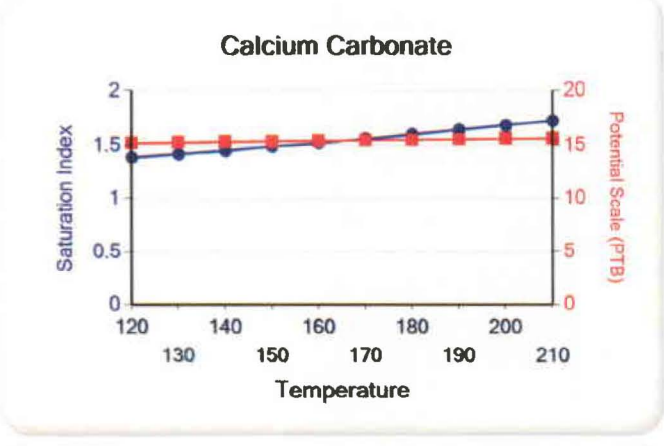

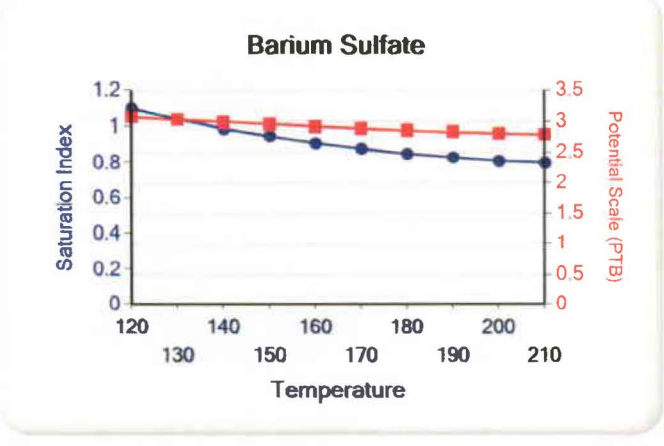

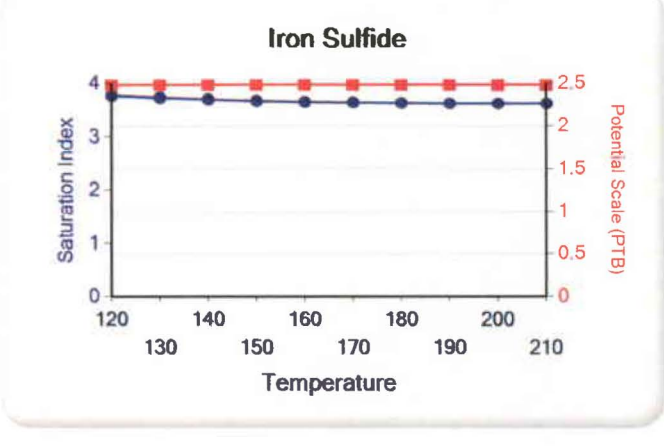

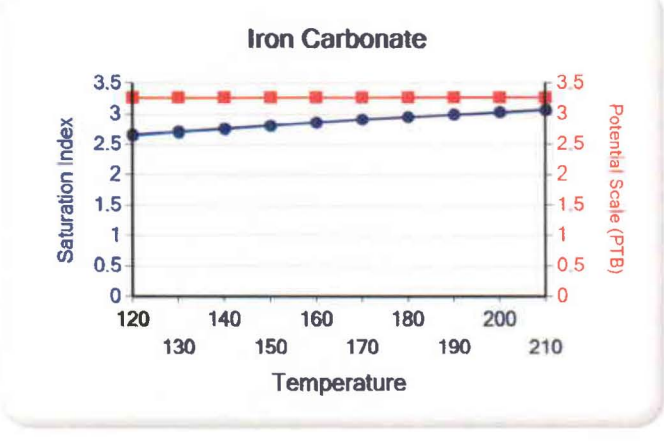

Multi-Chem Analytical Laboratory
1553 East Highway 40
Vernal, UT 84078

multi-chem®
A HALLIBURTON SERVICE

Water Analysis Report

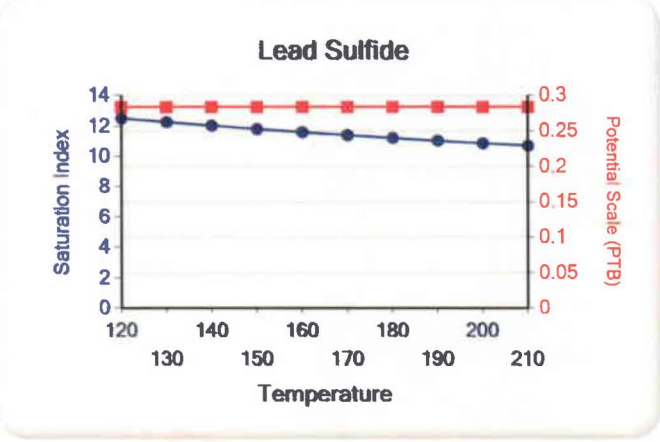

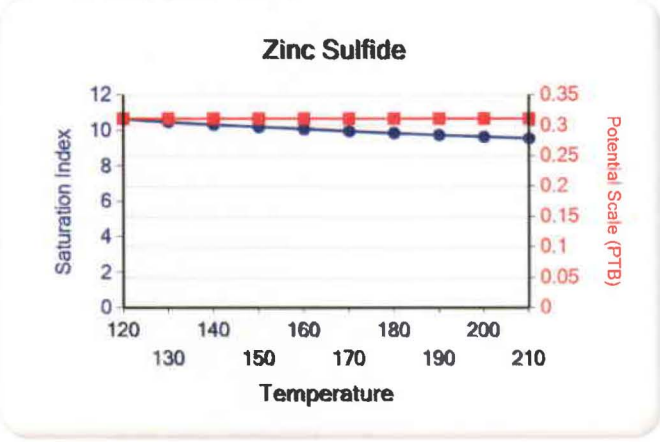

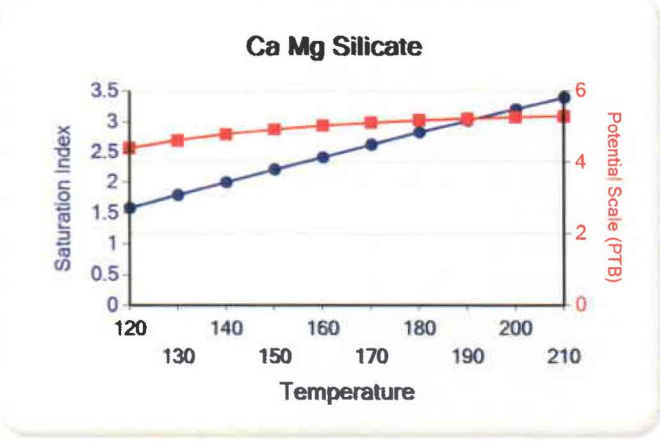

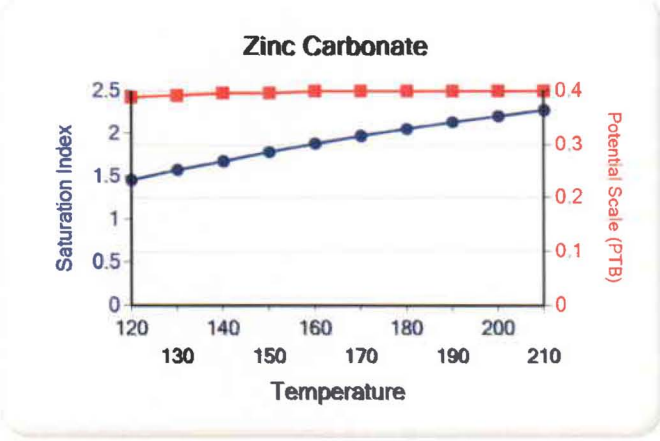

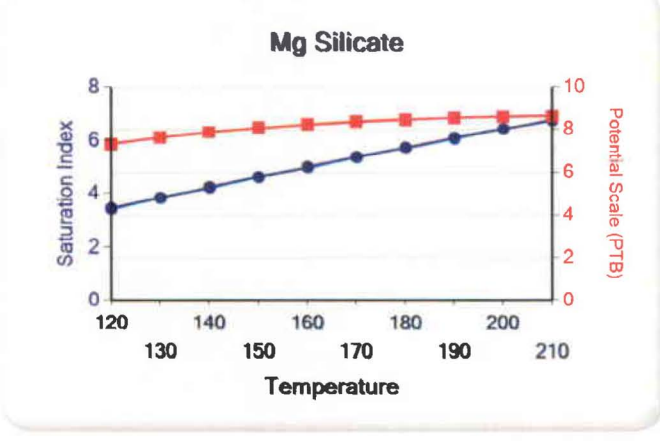

Multi-Chem Analytical Laboratory
1553 East Highway 40
Vernal, UT 84078

multi-chem®
A HALLIBURTON SERVICE

Water Analysis Report

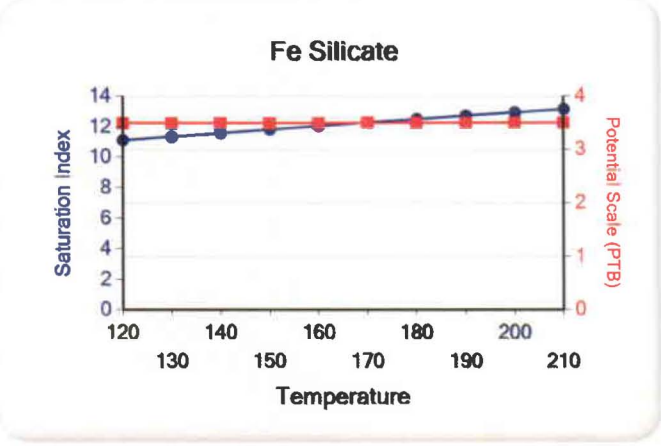

ATTACHMENT F

5 of 6

multi-chem®
A HALLIBURTON SERVICE

Multi-Chem Analytical Laboratory
1553 East Highway 40
Vernal, UT 84078

Units of Measurement: **Standard**

Water Analysis Report

Production Company: **NEWFIELD PRODUCTION**
Well Name: **SWDIF**
Sample Point: **After Filter**
Sample Date: **12/4/2012**
Sample ID: **WA-229142**

Sales Rep: **Michael McBride**
Lab Tech: **Gary Peterson**

Scaling potential predicted using ScaleSoftPitzer from Brine Chemistry Consortium (Rice University)

Sample Specifics	
Test Date:	12/5/2012
System Temperature 1 (°F):	120.00
System Pressure 1 (psig):	60.0000
System Temperature 2 (°F):	210.00
System Pressure 2 (psig):	60.0000
Calculated Density (g/ml):	0.999
pH:	6.80
Calculated TDS (mg/L):	2304.49
CO2 in Gas (%):	
Dissolved CO_2 (mg/L)):	15.00
H_2S in Gas (%):	
H2S in Water (mg/L):	2.50

Analysis @ Properties in Sample Specifics			
Cations	*mg/L*	*Anions*	*mg/L*
Sodium (Na):	734.93	Chloride (Cl):	1000.00
Potassium (K):	11.00	Sulfate (SO_4):	120.00
Magnesium (Mg):	26.00	Bicarbonate (HCO_3):	366.00
Calcium (Ca):	46.20	Carbonate (CO_3):	
Strontium (Sr):		Acetic Acid (CH_3COO)	
Barium (Ba):	0.17	Propionic Acid (C_2H_5COO)	
Iron (Fe):	0.13	Butanoic Acid (C_3H_7COO)	
Zinc (Zn):	0.02	Isobutyric Acid ($(CH_3)_2CHCOO$)	
Lead (Pb):	0.00	Fluoride (F):	
Ammonia NH_3:		Bromine (Br):	
Manganese (Mn):	0.04	Silica (SiO_2):	

Notes:
9:30

(PTB = Pounds per Thousand Barrels)

		Calcium Carbonate		Barium Sulfate		Iron Sulfide		Iron Carbonate		Gypsum CaSO4·2H2O		Celestite SrSO4		Halite NaCl		Zinc Sulfide	
Temp (°F)	PSI	SI	PTB	SI	PTB	SI	PTB	SI	PTB	SI	PTB	SI	PTB	SI	PTB	SI	PTB
210.00	60.00	0.28	10.64	0.00	0.00	0.20	0.02	0.00	0.00	0.00	0.00	0.00	0.00	0.00	0.00	6.28	0.01
200.00	60.00	0.19	7.48	0.00	0.00	0.13	0.02	0.00	0.00	0.00	0.00	0.00	0.00	0.00	0.00	6.31	0.01
190.00	60.00	0.11	4.25	0.00	0.00	0.07	0.01	0.00	0.00	0.00	0.00	0.00	0.00	0.00	0.00	6.35	0.01
180.00	60.00	0.02	0.97	0.00	0.00	0.01	0.00	0.00	0.00	0.00	0.00	0.00	0.00	0.00	0.00	6.39	0.01
170.00	60.00	0.00	0.00	0.00	0.00	0.00	0.00	0.00	0.00	0.00	0.00	0.00	0.00	0.00	0.00	6.44	0.01
160.00	60.00	0.00	0.00	0.00	0.00	0.00	0.00	0.00	0.00	0.00	0.00	0.00	0.00	0.00	0.00	6.50	0.01
150.00	60.00	0.00	0.00	0.01	0.00	0.00	0.00	0.00	0.00	0.00	0.00	0.00	0.00	0.00	0.00	6.56	0.01
140.00	60.00	0.00	0.00	0.05	0.01	0.00	0.00	0.00	0.00	0.00	0.00	0.00	0.00	0.00	0.00	6.64	0.01
130.00	60.00	0.00	0.00	0.10	0.02	0.00	0.00	0.00	0.00	0.00	0.00	0.00	0.00	0.00	0.00	6.72	0.01
120.00	60.00	0.00	0.00	0.15	0.03	0.00	0.00	0.00	0.00	0.00	0.00	0.00	0.00	0.00	0.00	6.80	0.01

Multi-Chem Analytical Laboratory
1553 East Highway 40
Vernal, UT 84078

multi-chem
A HALLIBURTON SERVICE

Water Analysis Report

		Hemihydrate CaSO4~0.5H2O		Anhydrate CaSO4		Calcium Fluoride		Zinc Carbonate		Lead Sulfide		Mg Silicate		Ca Mg Silicate		Fe Silicate	
Temp (°F)	PSI	SI	PTB	SI	PTB	SI	PTB	SI	PTB	SI	PTB	SI	PTB	SI	PTB	SI	PTB
210.00	60.00	0.00	0.00	0.00	0.00	0.00	0.00	0.00	0.00	0.00	0.00	0.00	0.00	0.00	0.00	0.00	0.00
200.00	60.00	0.00	0.00	0.00	0.00	0.00	0.00	0.00	0.00	0.00	0.00	0.00	0.00	0.00	0.00	0.00	0.00
190.00	60.00	0.00	0.00	0.00	0.00	0.00	0.00	0.00	0.00	0.00	0.00	0.00	0.00	0.00	0.00	0.00	0.00
180.00	60.00	0.00	0.00	0.00	0.00	0.00	0.00	0.00	0.00	0.00	0.00	0.00	0.00	0.00	0.00	0.00	0.00
170.00	60.00	0.00	0.00	0.00	0.00	0.00	0.00	0.00	0.00	0.00	0.00	0.00	0.00	0.00	0.00	0.00	0.00
160.00	60.00	0.00	0.00	0.00	0.00	0.00	0.00	0.00	0.00	0.00	0.00	0.00	0.00	0.00	0.00	0.00	0.00
150.00	60.00	0.00	0.00	0.00	0.00	0.00	0.00	0.00	0.00	0.00	0.00	0.00	0.00	0.00	0.00	0.00	0.00
140.00	60.00	0.00	0.00	0.00	0.00	0.00	0.00	0.00	0.00	0.00	0.00	0.00	0.00	0.00	0.00	0.00	0.00
130.00	60.00	0.00	0.00	0.00	0.00	0.00	0.00	0.00	0.00	0.00	0.00	0.00	0.00	0.00	0.00	0.00	0.00
120.00	60.00	0.00	0.00	0.00	0.00	0.00	0.00	0.00	0.00	0.00	0.00	0.00	0.00	0.00	0.00	0.00	0.00

These scales have positive scaling potential under initial temperature and pressure: Calcium Carbonate Iron Sulfide Zinc Sulfide

These scales have positive scaling potential under final temperature and pressure: Barium Sulfate Zinc Sulfide

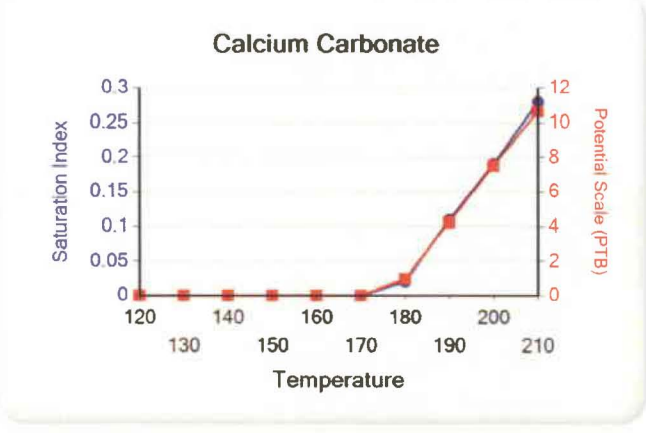

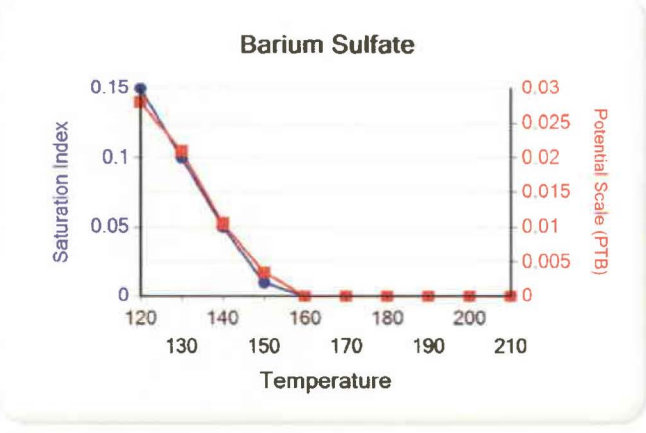

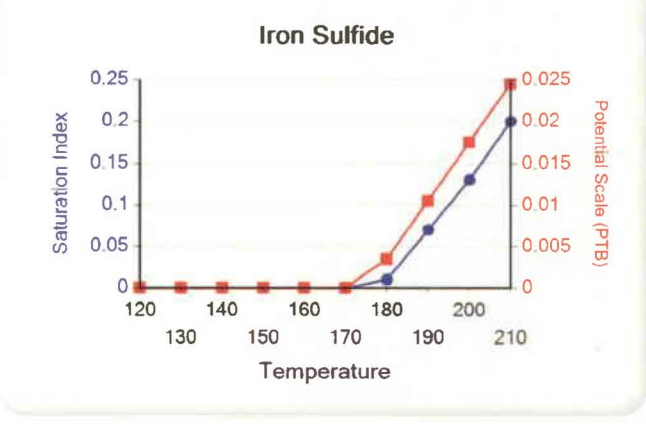

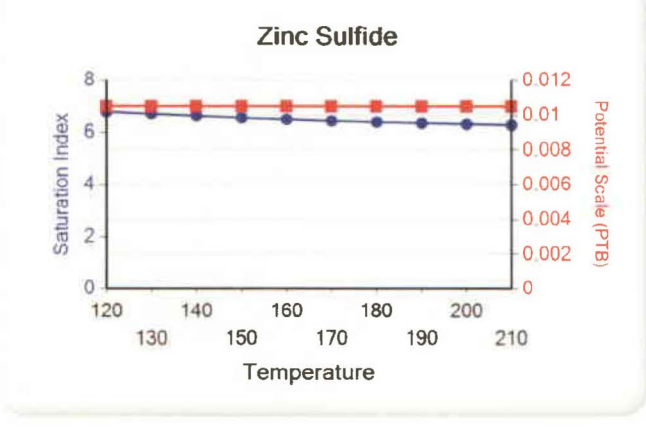

Attachment "G"

Federal #6-19-9-16
Proposed Maximum Injection Pressure

Frac Interval (feet) Top	Bottom	Avg. Depth (feet)	ISIP (psi)	Calculated Frac Gradient (psi/ft)	Pmax
5412	5426	5419	2154	0.83	2119
5306	5314	5310	2353	0.88	2319
5238	5254	5246	2569	0.92	2535
5099	5107	5103	2388	0.90	2355
4804	4834	4819	2309	0.91	2278
4618	4675	4647	2016	0.87	1986
4410	4418	4414	1650	0.81	1621 ←
				Minimum	1621

Calculation of Maximum Surface Injection Pressure
Pmax = (Frac Grad -(0.433*1.015)) x Depth of Top Perf
where pressure gradient for the fresh water is .433 psi/ft and
specific gravity of the injected water is 1.015.

Frac Gradient = (ISIP +(0.433*Top Perf.))/Top Perf.

Please note: These are existing perforations; additional perforations may be added during the actual conversion procedure.

NEWFIELD

ATTACHMENT G-1

1 of 11

DAILY COMPLETION REPORT

WELL NAME: Federal 6-19-9-16 **Report Date:** 6-Jun-07 **Day:** 1

Operation: Completion **Rig:** Rigless

WELL STATUS

Surf Csg: 8 5/8' @ 324' **Prod Csg:** 5 1/2" @ 5772' **Csg PBTD:** 5677' WL

Tbg: **Size:** **Wt:** **Grd:** **Pkr/EOT @:** **BP/Sand PBTD:**

PERFORATION RECORD

Zone	Perfs	SPF/#shots	Zone	Perfs	SPF/#shots
			CP3 sds	5412-5426'	4/56

CHRONOLOGICAL OPERATIONS

Date Work Performed: 5-Jun-07 **SITP:** **SICP:** 0

Install 5M frac head. NU 6" 5M Cameron BOP. RU H/O truck & pressure test casing, blind rams, frac head & casing valves to 4500 psi. RU Perforators LLC WLT w/ mast & run CBL under pressure. WLTD @ 5677' & cement top @ 74' Perforate stage #1. CP3 sds @ 5412-5426' w/ 3 1/8" Slick guns (19 gram, .49" HE, 120°, 21.92" pen, EXP-3319-331 Titan) w/ 4 spf for total of 56 shots. 137 BWTR. SIFN.

FLUID RECOVERY (BBLS)

Starting fluid load to be recovered: 137 **Starting oil rec to date:**

Fluid lost/recovered today: 0 **Oil lost/recovered today:**

Ending fluid to be recovered: 137 **Cum oil recovered:**

IFL: **FFL:** **FTP:** **Choke:** **Final Fluid Rate:** **Final oil cut:**

STIMULATION DETAIL

Base Fluid used: **Job Type:**

Company:

Procedure or Equipment detail:

Max TP: **Max Rate:** **Total fluid pmpd:**

Avg TP: **Avg Rate:** **Total Prop pmpd:**

ISIP: **5 min:** **10 min:** **15 min:**

Completion Supervisor: Orson Barney

COSTS

Weatherford BOP	
NPC NU crew	
NDSI trucking	
Perforators LLC	
Drilling cost	
Action hot oil	
Location preparation	
NPC wellhead	
Benco - anchors	
Admin. Overhead	
NPC Supervisor	
DAILY COST:	$0
TOTAL WELL COST:	

NEWFIELD

ATTACHMENT G-1

2 of 11

DAILY COMPLETION REPORT

WELL NAME: Federal 6-19-9-16 **Report Date:** 8-Jun-07 **Day:** 2a

Operation: Completion **Rig:** Rigless

WELL STATUS

Surf Csg: 8 5/8' @ 324' **Prod Csg:** 5 1/2" @ 5772' **Csg PBTD:** 5677' WL

Tbg: **Size:** **Wt:** **Grd:** **Pkr/EOT @:** **BP/Sand PBTD:**

PERFORATION RECORD

Zone	Perfs	SPF/#shots	Zone	Perfs	SPF/#shots
			CP3 sds	5412-5426'	4/56

CHRONOLOGICAL OPERATIONS

Date Work Performed: 7-Jun-07 **SITP:** **SICP:** 119 psi

Day 2a.
RU BJ Services. 119 psi on well. Frac CP3 sds w/ 34,633#'s of 20/40 sand in 371 bbls of Lightning 17 fluid. Broke @ 3725 psi. Treated w/ ave pressure of 2052 psi @ ave rate of 24.7 BPM. Pumped 504 gals of 15% HCL in flush fo Stage #2. ISIP 2154 psi. Leave pressure on well. 508 BWTR. See Day 2b.

FLUID RECOVERY (BBLS)

Starting fluid load to be recovered: 137 **Starting oil rec to date:**

Fluid lost/recovered today: 371 **Oil lost/recovered today:**

Ending fluid to be recovered: 508 **Cum oil recovered:**

IFL: **FFL:** **FTP:** **Choke:** **Final Fluid Rate:** **Final oil cut:**

STIMULATION DETAIL

Base Fluid used: Lightning 17 **Job Type:** Sand frac

Company: BJ Services

Procedure or Equipment detail: CP3 sands

437 gals to breakdown & get crosslink.
2800 gals of pad
2194 gals W/ 1-5 ppg of 20/40 sand
4741 gals W/ 5-8 ppg of 20/40 sand
Flush W/ 504 gals of 15% HCL acid
Flush W/ 4906 gals of slick water

Flush called @ blender--includes 2 bbls pump/line volume

Max TP: 2360 **Max Rate:** 24.8 BPM **Total fluid pmpd:** 371 bbls

Avg TP: 2052 **Avg Rate:** 24.7 BPM **Total Prop pmpd:** 34,633#'s

ISIP: 2154 **5 min:** **10 min:** **FG:** .83

Completion Supervisor: Orson Barney

COSTS

BJ Services-CP3	
CD wtr & trucking	
NPC fuel gas	
Weatherford tools/serv	
NPC trucking	
NPC supervision	
DAILY COST:	$0
TOTAL WELL COST:	

NEWFIELD

ATTACHMENT G-1

3 of 11

DAILY COMPLETION REPORT

WELL NAME: Federal 6-19-9-16 **Report Date:** 8-Jun-07 **Day:** 2b

Operation: Completion **Rig:** Rigless

WELL STATUS

Surf Csg: 8 5/8' @ 324' **Prod Csg:** 5 1/2" @ 5772' **Csg PBTD:** 5677' WL

Tbg: **Size:** **Wt:** **Grd:** **Pkr/EOT @:** **BP/Sand PBTD:** 5285'

BP: 5370'

PERFORATION RECORD

Zone	Perfs	SPF/#shots	Zone	Perfs	SPF/#shots
			LODC	5238-5254'	4/64
			CP1 sds	5306-5314'	4/32
			CP3 sds	5412-5426'	4/56

CHRONOLOGICAL OPERATIONS

Date Work Performed: 7-Jun-07 **SITP:** **SICP:** 128 psi

Day 2b. RU Perforators WLT, crane & lubricator. RIH w/ Weatherford 5-1/2" 5K composite solid frac plug & 8' perf gun. Set plug @ 5370'. Perforate CP1 sds @ 5306- 14' w/ 3-1/8" Slick Guns (19 gram, .49" HE, 120°, 21.92" pen, EXP-3319-331 Titan) w/ 4 sp for total of 32 shots. RU BJ Services. 128 psi on well. Pressured up to 4200 psi, Would not breakdown. RU WL dump bail acid RU BJ. Frac CP1 sds w/ 24,825#'s of 20/40 sand in 338 bbls of Lightning 17 fluid. Broke @ 3521 psi. Treated w/ ave pressure o 2394 psi @ ave rate of 24.7 BPM. Pumped 504 gals of 15% HCL in flush for Stage #3. ISIP 2353 psi. RU Perforators WLT, crane & lubricator. RIH w/ Weatherford 5-1/2" 5K composite solid frac plug & 16' perf gun. Set plug @ 5285'. Perforate LODC sds @ 5238- 54' w/ 3-1/8" Slick Guns (19 gram, .49" HE, 120°, 21.92" pen, EXP-3319-331 Titan) w/ 4 spf for total of 64 shots. RD WL Leave pressure on well. 846 BWTR.

FLUID RECOVERY (BBLS)

Starting fluid load to be recovered: 508 **Starting oil rec to date:**

Fluid lost/recovered today: 338 **Oil lost/recovered today:**

Ending fluid to be recovered: 846 **Cum oil recovered:**

IFL: **FFL:** **FTP:** **Choke:** **Final Fluid Rate:** **Final oil cut:**

STIMULATION DETAIL

Base Fluid used: Lightning 17 **Job Type:** Sand frac

Company: BJ Services

Procedure or Equipment detail: CP1 sands

454 gals to breakdown & get crosslink

2500 gals of pad

1915 gals W/ 1-4 ppg of 20/40 sand

3967 gals W/ 4-6.5 ppg of 20/40 sand

Flush W/ 504 gals of 15% HCL acid

Flush W/ 4843 gals of slick water

Flush called @ blender--includes 2 bbls pump/line volume

Max TP: 2630 **Max Rate:** 24.8 BPM **Total fluid pmpd:** 338 bbls

Avg TP: 2394 **Avg Rate:** 24.7 BPM **Total Prop pmpd:** 24,825#'s

ISIP: 2353 **5 min:** **10 min:** **FG:** .88

Completion Supervisor: Orson Barney

COSTS

BJ Services-CP1	
CD wtr & trucking	
NPC fuel gas	
Weatherford tools/serv	
Perforators LLC.	
NPC supervision	
Perforators LLC- LODC	
DAILY COST:	$0
TOTAL WELL COST:	

NEWFIELD

ATTACHMENT G-1

4 of 11

DAILY COMPLETION REPORT

WELL NAME: Federal 6-19-9-16 **Report Date:** 9-Jun-07 **Day:** 3a

Operation: Completion **Rig:** Rigless

WELL STATUS

Surf Csg: 8 5/8' @ 324' **Prod Csg:** 5 1/2" @ 5772' **Csg PBTD:** 5677' WL

Tbg: **Size:** **Wt:** **Grd:** **Pkr/EOT @:** **BP/Sand PBTD:** 5285'

BP: 5370'

PERFORATION RECORD

Zone	Perfs	SPF/#shots	Zone	Perfs	SPF/#shots
			LODC	5238-5254'	4/64
			CP1 sds	5306-5314'	4/32
			CP3 sds	5412-5426'	4/56

CHRONOLOGICAL OPERATIONS

Date Work Performed: 8-Jun-07 **SITP:** **SICP:** 869 psi

Day 3a.
RU BJ Services. BJ had bad plunger on pump truck, Had to rebuild before pumping. 869 psi on well. Frac LODC sds w/ 69,984#'s of 20/40 sand in 557 bbls of Lightning 17 fluid. Broke @ 3429 psi. Treated w/ ave pressure of 2189 psi @ ave rate of 24.7 BPM. Pumped 504 gals of 15% HCL in flush for Stage #4. ISIP 2569 psi. Leave pressure on well. 1403 BWTR. See Day 3b.

FLUID RECOVERY (BBLS)

Starting fluid load to be recovered: 846 **Starting oil rec to date:**

Fluid lost/recovered today: 557 **Oil lost/recovered today:**

Ending fluid to be recovered: 1403 **Cum oil recovered:**

IFL: **FFL:** **FTP:** **Choke:** **Final Fluid Rate:** **Final oil cut:**

STIMULATION DETAIL

Base Fluid used: Lightning 17 **Job Type:** Sand frac

Company: BJ Services

Procedure or Equipment detail: LODC sands

5400 gals of pad
3625 gals W/ 1-5 ppg of 20/40 sand
7250 gals W/ 5-8 ppg of 20/40 sand
1894 gals W/ 8 ppg of 20/40 sand
Flush W/ 504 gals of 15% HCL acid
Flush W/ 4729 gals of slick water
Flush called @ blender--includes 2 bbls pump/line volume

Max TP: 2464 **Max Rate:** 24.7 BPM **Total fluid pmpd:** 557 bbls

Avg TP: 2189 **Avg Rate:** 24.7 BPM **Total Prop pmpd:** 69,984#'s

ISIP: 2569 **5 min:** **10 min:** **FG:** .92

Completion Supervisor: Orson Barney

COSTS

BJ Services-LODC	
CD wtr & trucking	
NPC fuel gas	
Weatherford tools/serv	
NPC supervision	
DAILY COST:	$0
TOTAL WELL COST:	

NEWFIELD

ATTACHMENT G-1

5 of 11

DAILY COMPLETION REPORT

WELL NAME: Federal 6-19-9-16 **Report Date:** 9-Jun-07 **Day:** 3b

Operation: Completion **Rig:** Rigless

WELL STATUS

Surf Csg: 8 5/8' @ 324' **Prod Csg:** 5 1/2" @ 5772' **Csg PBTD:** 5677' WL

Tbg: **Size:** **Wt:** **Grd:** **Pkr/EOT @:** **BP/Sand PBTD:** 5200'

BP: 5285', 5370'

PERFORATION RECORD

Zone	Perfs	SPF/#shots	Zone	Perfs	SPF/#shots
			LODC	5099-5107'	4/32
			LODC	5238-5254'	4/64
			CP1 sds	5306-5314'	4/32
			CP3 sds	5412-5426'	4/56

CHRONOLOGICAL OPERATIONS

Date Work Performed: 8-Jun-07 **SITP:** **SICP:** 685 psi

Day 3b.
RU Perforators WLT, crane & lubricator. RIH w/ Weatherford 5-1/2" 5K composite solid frac plug & 8' perf gun. Se plug @ 5200'. Perforate LODC sds @ 5099- 5107' w/ 3-1/8" Slick Guns (19 gram, .49" HE, 120°, 21.92" pen, EXP- 3319-331 Titan) w/ 4 spf for total of 32 shots. RU BJ Services. 685 psi on well. Frac LODC sds w/ 44,824#'s of 20/4C sand in 411 bbls of Lightning 17 fluid. Broke @ 3466 psi. Treated w/ ave pressure of 2128 psi @ ave rate of 24.7 BPM. Pumped 504 gals of 15% HCL in flush for Stage #5. ISIP 2388 psi. Leave pressure on well. 1814 BWTR. See Day 3c.

FLUID RECOVERY (BBLS)

Starting fluid load to be recovered: 1403 **Starting oil rec to date:**

Fluid lost/recovered today: 411 **Oil lost/recovered today:**

Ending fluid to be recovered: 1814 **Cum oil recovered:**

IFL: **FFL:** **FTP:** **Choke:** **Final Fluid Rate:** **Final oil cut:**

STIMULATION DETAIL

Base Fluid used: Lightning 17 **Job Type:** Sand frac

Company: BJ Services

Procedure or Equipment detail: LODC sands

3600 gals of pad

2819 gals W/ 1-5 ppg of 20/40 sand

5765 gals W/ 5-8 ppg of 20/40 sand

Flush W/ 504 gals of 15% HCL acid

Flush W/ 4591 gals of slick water

Flush called @ blender--includes 2 bbls pump/line volume

Max TP: 2438 **Max Rate:** 24.7 BPM **Total fluid pmpd:** 411 bbls

Avg TP: 2128 **Avg Rate:** 24.7 BPM **Total Prop pmpd:** 44,824#'s

ISIP: 2388 **5 min:** **10 min:** **FG:** .90

Completion Supervisor: Orson Barney

COSTS

BJ Services-LODC	
CD wtr & trucking	
NPC fuel gas	
Weatherford tools/serv	
Perforators LLC.	
NPC supervision	
DAILY COST:	$0
TOTAL WELL COST:	

NEWFIELD

ATTACHMENT G-1
6 of 11

DAILY COMPLETION REPORT

WELL NAME: Federal 6-19-9-16 **Report Date:** 9-Jun-07 **Day:** 3c

Operation: Completion **Rig:** Rigless

WELL STATUS

Surf Csg: 8 5/8' @ 324' **Prod Csg:** 5 1/2" @ 5772' **Csg PBTD:** 5677' WL

Tbg: **Size:** **Wt:** **Grd:** **Pkr/EOT @:** **BP/Sand PBTD:** 4940'

BP: 5200', 5285', 5370'

PERFORATION RECORD

Zone	Perfs	SPF/#shots	Zone	Perfs	SPF/#shots
			LODC	5099-5107'	4/32
			LODC	5238-5254'	4/64
			CP1 sds	5306-5314'	4/32
A1 sds	4804-4812'	4/32	CP3 sds	5412-5426'	4/56
A3 sds	4824-4834'	4/40			

CHRONOLOGICAL OPERATIONS

Date Work Performed: 8-Jun-07 **SITP:** **SICP:** 50 psi

Day 3c.
RU Perforators WLT, crane & lubricator. RIH w/ Weatherford 5-1/2" 5K composite solid frac plug, 10' & 8' perf gun Set plug @ 4940'. Perforate A3 sds @ 4824- 4834', A1 sds @ 4804- 4812' w/ 3-1/8" Slick Guns (19 gram, .49" HE 120°, 21.92" pen, EXP-3319-331 Titan) w/ 4 spf for total of 72 shots (2 runs). RU BJ Services. 50 psi on well. Frac A1 & A3 sds w/ 84,070#'s of 20/40 sand in 625 bbls of Lightning 17 fluid. Broke @ 2493 psi. Treated w/ ave pressure o 1849 psi @ ave rate of 24.7 BPM. Pumped 504 gals of 15% HCL in flush for Stage #6. ISIP 2309 psi. Leave pressure on well. 2439 BWTR. See Day 3d.

FLUID RECOVERY (BBLS)

Starting fluid load to be recovered: 1814 **Starting oil rec to date:**
Fluid lost/recovered today: 625 **Oil lost/recovered today:**
Ending fluid to be recovered: 2439 **Cum oil recovered:**
IFL: **FFL:** **FTP:** **Choke:** **Final Fluid Rate:** **Final oil cut:**

STIMULATION DETAIL

Base Fluid used: Lightning 17 **Job Type:** Sand frac
Company: BJ Services
Procedure or Equipment detail: A1 & A3 sands

6400 gals of pad
4319 gals W/ 1-5 ppg of 20/40 sand
8622 gals W/ 5-8 ppg of 20/40 sand
2058 gals W/ 8 ppg of 20/40 sand
Flush W/ 504 gals of 15% HCL acid
Flush W/ 4339 gals of slick water
Flush called @ blender--includes 2 bbls pump/line volume

Max TP: 2090 **Max Rate:** 24.8 BPM **Total fluid pmpd:** 625 bbls
Avg TP: 1849 **Avg Rate:** 24.7 BPM **Total Prop pmpd:** 84,070#'s
ISIP: 2309 **5 min:** **10 min:** **FG:** .91
Completion Supervisor: Orson Barney

COSTS

BJ Services-A1/A3	
CD wtr & trucking	
NPC fuel gas	
Weatherford tools/serv	
Perforators LLC.	
NPC supervision	
DAILY COST:	$0
TOTAL WELL COST:	

NEWFIELD

ATTACHMENT G-1

7 of 11

DAILY COMPLETION REPORT

WELL NAME: Federal 6-19-9-16 **Report Date:** 9-Jun-07 **Day:** 3d

Operation: Completion **Rig:** Rigless

WELL STATUS

Surf Csg: 8 5/8' @ 324' **Prod Csg:** 5 1/2" @ 5772' **Csg PBTD:** 5677' WL

Tbg: **Size:** **Wt:** **Grd:** **Pkr/EOT @:** **BP/Sand PBTD:** 4750'

BP: 4940', 5200', 5285', 5370'

PERFORATION RECORD

Zone	Perfs	SPF/#shots	Zone	Perfs	SPF/#shots
			LODC	5099-5107'	4/32
B1 sds	4618-4635'	4/68	LODC	5238-5254'	4/64
B2 sds	4669-4675'	4/24	CP1 sds	5306-5314'	4/32
A1 sds	4804-4812'	4/32	CP3 sds	5412-5426'	4/56
A3 sds	4824-4834'	4/40			

CHRONOLOGICAL OPERATIONS

Date Work Performed: 8-Jun-07 **SITP:** **SICP:** 49 psi

Day 3d.

RU Perforators WLT, crane & lubricator. RIH w/ Weatherford 5-1/2" 5K composite solid frac plug, 6' & 17' perf gun Set plug @ 4750'. Perforate B2 sds @ 4669- 75', B1 sds @ 4618- 35' w/ 3-1/8" Slick Guns (19 gram, .49" HE, 120° 21.92" pen, EXP-3319-331 Titan) w/ 4 spf for total of 92 shots (2 runs). RU BJ Services. 49 psi on well. Frac B1 & B2 sds w/ 136,676#'s of 20/40 sand in 945 bbls of Lightning 17 fluid. Broke @ 2638 psi. Treated w/ ave pressure of 1720 psi @ ave rate of 24.7 BPM. Pumped 504 gals of 15% HCL in flush for Stage #7. ISIP 2016 psi. Leave pressure on well. 3384 BWTR. See Day 3e.

FLUID RECOVERY (BBLS)

Starting fluid load to be recovered: 2439 **Starting oil rec to date:**

Fluid lost/recovered today: 945 **Oil lost/recovered today:**

Ending fluid to be recovered: 3384 **Cum oil recovered:**

IFL: **FFL:** **FTP:** **Choke:** **Final Fluid Rate:** **Final oil cut:**

STIMULATION DETAIL

Base Fluid used: Lightning 17 **Job Type:** Sand frac

Company: BJ Services

Procedure or Equipment detail: B1 & B2 sands

10700 gals of pad

7000 gals W/ 1-5 ppg of 20/40 sand

14000 gals W/ 5-8 ppg of 20/40 sand

3349 gals W/ 8 ppg of 20/40 sand

Flush W/ 504 gals of 15% HCL acid

Flush W/ 4154 gals of slick water

Flush called @ blender--includes 2 bbls pump/line volume

Max TP: 1980 **Max Rate:** 24.8 BPM **Total fluid pmpd:** 945 bbls

Avg TP: 1720 **Avg Rate:** 24.7 BPM **Total Prop pmpd:** 136,676#'s

ISIP: 2016 **5 min:** **10 min:** **FG:** .87

Completion Supervisor: Orson Barney

COSTS

BJ Services-B1/B2	
CD wtr & trucking	
NPC fuel gas	
Weatherford tools/serv	
Perforators LLC.	
NPC supervision	
DAILY COST:	$0
TOTAL WELL COST:	

NEWFIELD

ATTACHMENT G-1

8 of 11

DAILY COMPLETION REPORT

WELL NAME: Federal 6-19-9-16 **Report Date:** 9-Jun-07 **Day:** 3e

Operation: Completion **Rig:** Rigless

WELL STATUS

Surf Csg: 8 5/8' @ 324' **Prod Csg:** 5 1/2" @ 5772' **Csg PBTD:** 5677' WL

Tbg: **Size:** **Wt:** **Grd:** **Pkr/EOT @:** **BP/Sand PBTD:** 4520'

BP: 4750', 4940', 5200', 5285', 5370'

PERFORATION RECORD

Zone	Perfs	SPF/#shots	Zone	Perfs	SPF/#shots
D1 sds	4410-4418'	4/32	LODC	5099-5107'	4/32
B1 sds	4618-4635'	4/68	LODC	5238-5254'	4/64
B2 sds	4669-4675'	4/24	CP1 sds	5306-5314'	4/32
A1 sds	4804-4812'	4/32	CP3 sds	5412-5426'	4/56
A3 sds	4824-4834'	4/40			

CHRONOLOGICAL OPERATIONS

Date Work Performed: 8-Jun-07 **SITP:** **SICP:** 466 psi

Day 3e.
RU Perforators WLT, crane & lubricator. RIH w/ Weatherford 5-1/2" 5K composite solid frac plug 8' perf gun. Se plug @ 4520'. Perforate D1 sds @ 4410- 18' w/ 3-1/8" Slick Guns (19 gram, .49" HE, 120°, 21.92" pen, EXP-3319-331 Titan) w/ 4 spf for total of 32 shots. RU BJ Services. 466 psi on well. Frac D1 sds w/ 36,368#'s of 20/40 sand ir 369 bbls of Lightning 17 fluid. Broke @ 3041 psi. Treated w/ ave pressure of 1565 psi @ ave rate of 24.7 BPM. ISIF 1650 psi. Begin immediate flowback on 12/64 choke @ 1 BPM. Flowed for 2 1/2 hrs & died. Rec. 146 BTF. SIWFN w/ 3607 BWTR.

FLUID RECOVERY (BBLS)

Starting fluid load to be recovered: 3384 **Starting oil rec to date:**

Fluid lost/recovered today: 223 **Oil lost/recovered today:**

Ending fluid to be recovered: 3607 **Cum oil recovered:**

IFL: **FFL:** **FTP:** **Choke:** **Final Fluid Rate:** **Final oil cut:**

STIMULATION DETAIL

Base Fluid used: Lightning 17 **Job Type:** Sand frac

Company: BJ Services

Procedure or Equipment detail: D1 sands

3600 gals of pad

2819 gals W/ 1-5 ppg of 20/40 sand

4711 gals W/ 5-8 ppg of 20/40 sand

Flush W/ 4368 gals of slick water

Max TP: 1744 **Max Rate:** 24.7 BPM **Total fluid pmpd:** 369 bbls

Avg TP: 1565 **Avg Rate:** 24.7 BPM **Total Prop pmpd:** 36,368#'s

ISIP: 1650 **5 min:** **10 min:** **FG:** .81

Completion Supervisor: Orson Barney

COSTS

BJ Services-D1	
CD wtr & trucking	
NPC fuel gas	
Weatherford tools/serv	
Perforators LLC.	
NPC supervision	
NPC flowback hand	
NPC sfc equipment	
Monks pit reclaim	
Unichem chemicals	
Mecham welding/labor	
NDSI wtr disposal	
Mt west sanitation	
DAILY COST:	$0
TOTAL WELL COST:	

NEWFIELD

ATTACHMENT G-1

9 of 11

DAILY COMPLETION REPORT

WELL NAME: Federal 6-19-9-16 **Report Date:** 9-Jun-07 **Day:** 3e

Operation: Completion **Rig:** Rigless

WELL STATUS

Surf Csg: 8 5/8' @ 324' **Prod Csg:** 5 1/2" @ 5772' **Csg PBTD:** 5677' WL

Tbg: **Size:** **Wt:** **Grd:** **Pkr/EOT @:** **BP/Sand PBTD:** 4520'

BP: 4750', 4940', 5200', 5285', 5370'

PERFORATION RECORD

Zone	Perfs	SPF/#shots	Zone	Perfs	SPF/#shots
D1 sds	4410-4418'	4/32	LODC	5099-5107'	4/32
B1 sds	4618-4635'	4/68	LODC	5238-5254'	4/64
B2 sds	4669-4675'	4/24	CP1 sds	5306-5314'	4/32
A1 sds	4804-4812'	4/32	CP3 sds	5412-5426'	4/56
A3 sds	4824-4834'	4/40			

CHRONOLOGICAL OPERATIONS

Date Work Performed: 8-Jun-07 **SITP:** **SICP:** 466 psi

Day 3e.

RU Perforators WLT, crane & lubricator. RIH w/ Weatherford 5-1/2" 5K composite solid frac plug 8' perf gun. Se plug @ 4520'. Perforate D1 sds @ 4410- 18' w/ 3-1/8" Slick Guns (19 gram, .49" HE, 120°, 21.92" pen, EXP-3319-331 Titan) w/ 4 spf for total of 32 shots. RU BJ Services. 466 psi on well. Frac D1 sds w/ 36,368#'s of 20/40 sand ir 369 bbls of Lightning 17 fluid. Broke @ 3041 psi. Treated w/ ave pressure of 1565 psi @ ave rate of 24.7 BPM. ISIF 1650 psi. Begin immediate flowback on 12/64 choke @ 1 BPM. Flowed for 2 1/2 hrs & died. Rec. 146 BTF. SIWFN w/ 3607 BWTR.

FLUID RECOVERY (BBLS)

Starting fluid load to be recovered: 3384 **Starting oil rec to date:**

Fluid lost/recovered today: 223 **Oil lost/recovered today:**

Ending fluid to be recovered: 3607 **Cum oil recovered:**

IFL: **FFL:** **FTP:** **Choke:** **Final Fluid Rate:** **Final oil cut:**

STIMULATION DETAIL

Base Fluid used: Lightning 17 **Job Type:** Sand frac

Company: BJ Services

Procedure or Equipment detail: D1 sands

3600 gals of pad

2819 gals W/ 1-5 ppg of 20/40 sand

4711 gals W/ 5-8 ppg of 20/40 sand

Flush W/ 4368 gals of slick water

Max TP: 1744 **Max Rate:** 24.7 BPM **Total fluid pmpd:** 369 bbls

Avg TP: 1565 **Avg Rate:** 24.7 BPM **Total Prop pmpd:** 36,368#'s

ISIP: 1650 **5 min:** **10 min:** **FG:** .81

Completion Supervisor: Orson Barney

COSTS

BJ Services-D1	
CD wtr & trucking	
NPC fuel gas	
Weatherford tools/serv	
Perforators LLC.	
NPC supervision	
NPC flowback hand	
NPC sfc equipment	
Monks pit reclaim	
Unichem chemicals	
Mecham welding/labor	
NDSI wtr disposal	
Mt west sanitation	
DAILY COST:	$0
TOTAL WELL COST:	

NEWFIELD

ATTACHMENT G-1
10 of 11

DAILY COMPLETION REPORT

WELL NAME: Federal 6-19-9-16 **Report Date:** 6/12/2007 **Day:** 4

Operation: Completion **Rig:** Rigless

WELL STATUS

Surf Csg: 8 5/8' @ 324' **Prod Csg:** 5 1/2" @ 5772' **Csg PBTD:** 5726'

Tbg: **Size:** 2 7/8" **Wt:** 6.5# **Grd:** J-55 **Pkr/EOT @:** 5649' **BP/Sand PBTD:**

PERFORATION RECORD

Zone	Perfs	SPF/#shots	Zone	Perfs	SPF/#shots
D1 sds	4410-4418'	4/32	LODC	5099-5107'	4/32
B1 sds	4618-4635'	4/68	LODC	5238-5254'	4/64
B2 sds	4669-4675'	4/24	CP1 sds	5306-5314'	4/32
A1 sds	4804-4812'	4/32	CP3 sds	5412-5426'	4/56
A3 sds	4824-4834'	4/40			

CHRONOLOGICAL OPERATIONS

Date Work Performed: 6/11/2007 **SITP:** **SICP:** 466 psi

MIRU Western #4. ND Cameron BOP & 5m frac head. NU 3m production head & Schafer BOP. RIH w/ 4 3/4" chomp bit, bit sub & 2 7/8" tbg. from pipe rack (tallying & drifting tbg.). Tag @ 4405'. RU powerswivel & pump. C/O to CBP @ 4520' (15' of fill). DU CBP in 15 min. Cont RIH w/ tbg. Tag @ 4638'. C/O to CBP @ 4750' (112' of fill). DU CBP in 10 min. Cont. RIH w/ tbg. Tag @ 4847'. C/O to CBP @ 4940' (93' of fill). DU CBP in 10 min. Cont. RIH w/ tbg. Tag @ 5111'. C/O to CBP @ 5200' (89' of fill). DU CBP in 10 min. Cont. RIH w/ tbg. Tag @ 5230'. C/O to CBP @ 5285' (55' of fill). DU CBP in 10 min. Cont. RIH w/ tbg. Tag @ 5329'. C/O to CBP @ 5370' (41' of fill). DU CBP in 10 min. Cont. RIH w/ tbg. Tag @ 5601'. C/O to PBTD @ 5726' (125' of fill) Circulate well clean. Pull up to 5649'. RU swab. Made 6 runs. SFL @ surface. EFL @ 900'. Recovered 67 bbls water. No show of sand or oil. SWIFN.

FLUID RECOVERY (BBLS)

Starting fluid load to be recovered: 3607 **Starting oil rec to date:**

Fluid lost/recovered today: 50 **Oil lost/recovered today:**

Ending fluid to be recovered: 3557 **Cum oil recovered:**

IFL: **FFL:** **FTP:** **Choke:** **Final Fluid Rate:** **Final oil cut:**

COSTS

Western #4	
Weatherford BOP	
NDSI Trucking	
NPC Trucking	
NPC location cleanup	
Nabors P.S.	
B&L tbg.	
NPC Supervision	
DAILY COST:	$0
TOTAL WELL COST:	

Completion Supervisor: Don Dulen

NEWFIELD

ATTACHMENT G-1
11 of 11

DAILY COMPLETION REPORT

WELL NAME: Federal 6-19-9-16 **Report Date:** June 13, 2007 **Day:** 5

Operation: Completion **Rig:** Western #4

WELL STATUS

Surf Csg: 8 5/8' @ 324' Prod Csg: 5 1/2" @ 5772' Csg PBTD: 5726'

Tbg: Size: 2 7/8" Wt: 6.5# Grd: J-55 Anchor @: 5381' BP/Sand PBTD: 5726'

PERFORATION RECORD

Zone	Perfs	SPF/#shots	Zone	Perfs	SPF/#shots
D1 sds	4410-4418'	4/32	LODC	5099-5107'	4/32
B1 sds	4618-4635'	4/68	LODC	5238-5254'	4/64
B2 sds	4669-4675'	4/24	CP1 sds	5306-5314'	4/32
A1 sds	4804-4812'	4/32	CP3 sds	5412-5426'	4/56
A3 sds	4824-4834'	4/40			

CHRONOLOGICAL OPERATIONS

Date Work Performed: June 12, 2007 **SITP:** 0 **SICP:** 0

Well on vacuum. Con't swabbing well for cleanup. IFL @ 900'. Made 5 swb runs rec 56 BTF W/ tr oil, light gas & no sd. FFL @ 900'. TIH W/ tbg Tag sd @ 5716' (10' new fill). C/O sd to PBTD @ 5726'. Circ hole clean. Lost est 30 BW & rec tr oil. LD excess tbg. TOH W/ tbg--LD bit. TIH W BHA & production tbg as follows: 2 7/8 NC, 2 jts tbg, SN, 1 jt tbg, new CDI 5 1/2" TA (45K) & 173 jts 2 7/8 8rd 6.5# J-55 tbg. ND BOP. Set TA @ 5381' W/ SN @ 5413' & EOT @ 5475'. Land tbg W/ 16,000# tension. NU wellhead. PU & TIH W/ pump and "A" grade rod string as follows: new CDI 2 1/2" X 1 1/2" X 20' RHAC pump, 6-1 1/2" weight rods, 10-3/4" scrapered rods, 100-3/4" plain rods, 100-3/4" scrapered rods, 1-8' & 1-4' X 3/4' pony rods and 1 1/2" X 26' polished rod. Seat pump & RU pumping unit. W/ tbg full, pressure test tbg & pump to 200 psi. Stroke pump up W/ unit to 800 psi. Good pump action. RDMOSU. Est 3531 BWTR.

Place well on production @ 4:00 PM 6/12/2007 W/ 102" SL @ 4.5 SPM.

FINAL REPORT!!

FLUID RECOVERY (BBLS)

Starting fluid load to be recovered: 3557 Starting oil rec to date:

Fluid lost/recovered today: 26 Oil lost/recovered today:

Ending fluid to be recovered: 3531 Cum oil recovered:

IFL: 900' FFL: 900' FTP: Choke: Final Fluid Rate: Final oil cut: tr

	TUBING DETAIL	ROD DETAIL	COSTS	
			Western #4	
KB	12.00'	1 1/2" X 26' polished rod	Weatherford BOP	
173	2 7/8 J-55 tbg (5368.53')	1-8',& 1-4' X 3/4" pony rods	CDI TA	
	TA (2.80' @ 5380.53' KB)	100-3/4" scrapered rods	CDI SN	
1	2 7/8 J-55 tbg (29.45')	100-3/4" plain rods	CDI rod pump	
	SN (1.10' @ 5412.78' KB)	10-3/4" scrapered rods	NPC frac tks(10X5 dys)	
2	2 7/8 J-55 tbg (60.64')	6-1 1/2" weight rods	NPC swb tk (2 days)	
	2 7/8 NC (.45')	CDI 2 1/2' X 1 1/2" X 20'	NPC frac head	
EOT	5474.97' W/ 12' KB	RHAC pump W/ SM plunger	Zubiate HO trk	
			"A" grade rod string	
			NPC supervision	
			DAILY COST:	$0

Completion Supervisor: Gary Dietz **TOTAL WELL COST:**

ATTACHMENT H

WORK PROCEDURE FOR PLUGGING AND ABANDONMENT

1.		Set CIBP @ 4360'
2.	Plug #1	Set 100' plug on top of CIBP using 12 sx Class "G" cement
3.	Plug #2	185' balance plug using 22 sx Class "G" cement 50' above Trona-Bird's Nest extending 50' below base of Mahogany Oil Shale
4.	Plug #3	120' balance plug using 14sx Class "G" cement 60' above Uinta/Green River and extending 60' below
5.	Plug #4	Pump 44 sx Class "G" cement down 5 ½" casing to 374'

The approximate cost to plug and abandon this well is $42,000.

ATTACHMENT 14-1

FEDERAL 6-19-9-16

Spud Date: 05/13/07
Put on Production: 06/12/07
GL: 5988' KB: 6000'

Initial Production: BOPD, MCFD, BWPD

Proposed P & A
Wellbore Diagram

SURFACE CASING

CSG SIZE: 8-5/8"
GRADE: J-55
WEIGHT: 24#
LENGTH: 7 jts. (312.05')
DEPTH LANDED: 323.90' KB
HOLE SIZE:12-1/4"
CEMENT DATA: 160 sxs Class "G" cmt, est 3 bbls cmt to surf.

PRODUCTION CASING

CSG SIZE: 5-1/2"
GRADE: J-55
WEIGHT: 15.5#
LENGTH: 131 jts. (5758.79')
DEPTH LANDED: 5772.04' KB
HOLE SIZE: 7-7/8"
CEMENT DATA: 300 sxs Prem. Lite II mixed & 425 sxs 50/50 POZ.
CEMENT TOP: 74'

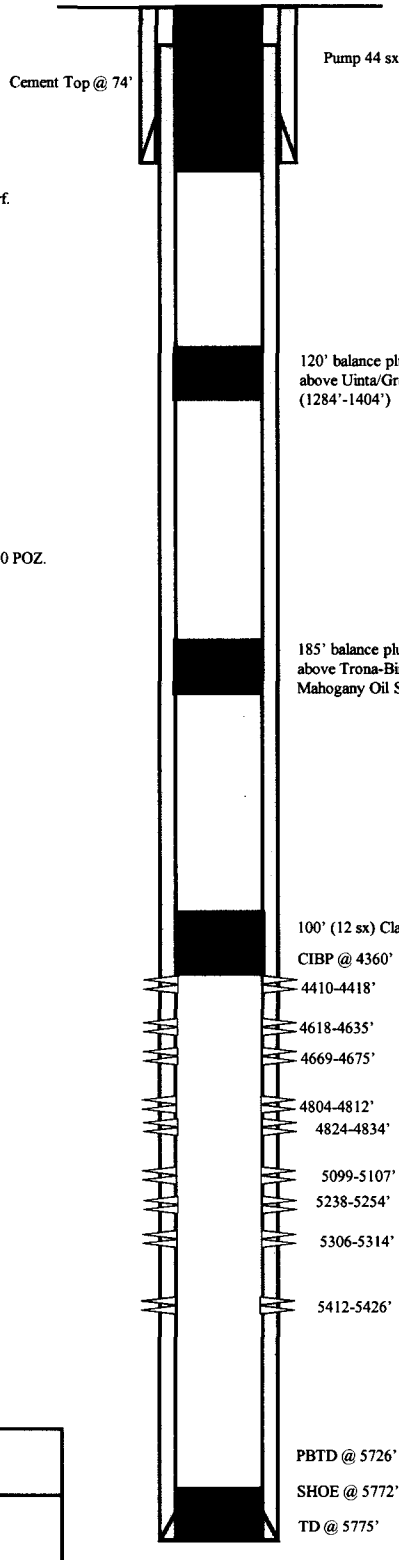

NEWFIELD

FEDERAL 6-19-9-16

1941'FNL & 1851' FWL

SE/NW Section 19-T9S-R16E

Duchesne Co, Utah

API #43-013-33100; Lease # UTU-64379

JL 11/26/2013

STATE OF UTAH
DEPARTMENT OF NATURAL RESOURCES
DIVISION OF OIL, GAS, AND MINING

FORM 9

5.LEASE DESIGNATION AND SERIAL NUMBER: UTU-64379

SUNDRY NOTICES AND REPORTS ON WELLS

Do not use this form for proposals to drill new wells, significantly deepen existing wells below current bottom-hole depth, reenter plugged wells, or to drill horizontal laterals. Use APPLICATION FOR PERMIT TO DRILL form for such proposals.

6. IF INDIAN, ALLOTTEE OR TRIBE NAME:

7.UNIT or CA AGREEMENT NAME: GMBU (GRRV)

1. TYPE OF WELL Oil Well

8. WELL NAME and NUMBER: FEDERAL 6-19-9-16

2. NAME OF OPERATOR: NEWFIELD PRODUCTION COMPANY

9. API NUMBER: 43013331000000

3. ADDRESS OF OPERATOR: Rt 3 Box 3630 , Myton, UT, 84052 **PHONE NUMBER:** 435 646-4825 Ext

9. FIELD and POOL or WILDCAT: MONUMENT BUTTE

4. LOCATION OF WELL
FOOTAGES AT SURFACE: 1941 FNL 1851 FWL
QTR/QTR, SECTION, TOWNSHIP, RANGE, MERIDIAN: Qtr/Qtr: SENW Section: 19 Township: 09.0S Range: 16.0E Meridian: S

COUNTY: DUCHESNE

STATE: UTAH

11

CHECK APPROPRIATE BOXES TO INDICATE NATURE OF NOTICE, REPORT, OR OTHER DATA

TYPE OF SUBMISSION

- ☐ NOTICE OF INTENT — Approximate date work will start:
- ✓ SUBSEQUENT REPORT — Date of Work Completion: 3/20/2014
- ☐ SPUD REPORT — Date of Spud:
- ☐ DRILLING REPORT — Report Date:

TYPE OF ACTION

☐ ACIDIZE	☐ ALTER CASING	☐ CASING REPAIR
☐ CHANGE TO PREVIOUS PLANS	☐ CHANGE TUBING	☐ CHANGE WELL NAME
✓ CHANGE WELL STATUS	☐ COMMINGLE PRODUCING FORMATIONS	✓ CONVERT WELL TYPE
☐ DEEPEN	☐ FRACTURE TREAT	☐ NEW CONSTRUCTION
☐ OPERATOR CHANGE	☐ PLUG AND ABANDON	☐ PLUG BACK
☐ PRODUCTION START OR RESUME	☐ RECLAMATION OF WELL SITE	☐ RECOMPLETE DIFFERENT FORMATION
☐ REPERFORATE CURRENT FORMATION	☐ SIDETRACK TO REPAIR WELL	☐ TEMPORARY ABANDON
☐ TUBING REPAIR	☐ VENT OR FLARE	☐ WATER DISPOSAL
☐ WATER SHUTOFF	☐ SI TA STATUS EXTENSION	☐ APD EXTENSION
☐ WILDCAT WELL DETERMINATION	☐ OTHER	OTHER:

12. DESCRIBE PROPOSED OR COMPLETED OPERATIONS. Clearly show all pertinent details including dates, depths, volumes, etc.

The subject well has been converted from a producing oil well to an injection well on 03/20/2014. On 03/18/2014 Chris Jensen with the State of Utah DOGM was contacted concerning the initial MIT on the above listed well. On 03/20/2014 the casing was pressured up to 1649 psig and charted for 30 minutes with no pressure loss. The well was not injecting during the test. The tubing pressure was 150 psig during the test. There was not a State representative available to witness the test.

NAME (PLEASE PRINT)	PHONE NUMBER	TITLE
Lucy Chavez-Naupoto	435 646-4874	Water Services Technician
SIGNATURE N/A		**DATE** 3/31/2014

RECEIVED: Mar. 31, 2014

Mechanical Integrity Test
Casing or Annulus Pressure Test

Newfield Production Company
Rt. 3 Box 3630
Myton, UT 84052
435-646-3721

Witness: _____ **Date** 3/20/14 **Time** 9:05 (am) pm

Test Conducted by: Riley Bayly

Others Present: _____

Well: Federal 6-19-9-16	**Field:** Monument Butte
Well Location: Federal 6-19-9-16 SE/NW Sec 19, T9S R16E Duchesne County Utah	**API No:** 4301333100

Time	Casing Pressure	
0 min	1648	psig
5	1648	psig
10	1649	psig
15	1649	psig
20	1649	psig
25	1649	psig
30 min	1649	psig
35		psig
40		psig
45		psig
50		psig
55		psig
60 min		psig

Tubing pressure: 150 psig

Result: (Pass) Fail

Signature of Witness: _____

Signature of Person Conducting Test: [signature]

federal 6-19-9-16 (conversion mit 3/20/14)

3/20/2014 9:05:08 AM

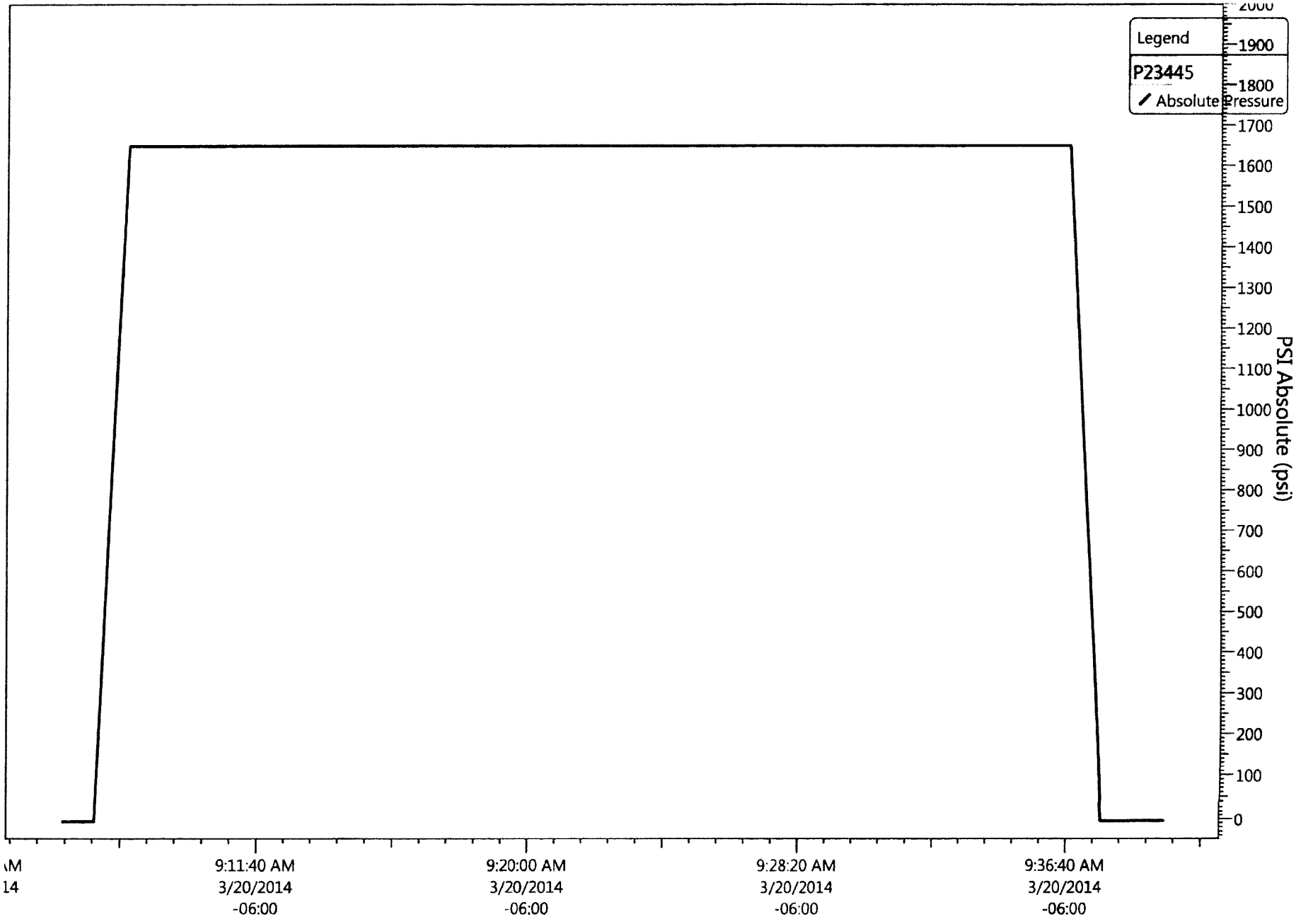

NEWFIELD

Job Detail Summary Report

Well Name: Federal 6-19-9-16

Jobs

Primary Job Type	Job Start Date	Job End Date
Conversion	3/14/2014	

Daily Operations

Report Start Date	Report End Date	24hr Activity Summary
3/14/2014	3/14/2014	MIRU

Start Time	End Time	Comment
13:30	17:30	Moved From 12-6-9-16: MIRUSU, BMW H/O Pmped 60BW d/ Csg, RDPU, LD & Stripped Polished Rod. Worked Rods to US Pmp, Flushed w/ 40BW d/Tbg, Soft Seat & PT Tbg to 3500psi, GOOD TEST!, LD 100- 3/4" 4per, SWIFWE
17:30	18:00	CREW TRAVEL

Report Start Date	Report End Date	24hr Activity Summary
3/17/2014	3/17/2014	CONT LD ROD STRING, NU BOP

Start Time	End Time	Comment
05:30	06:00	CREW TRAVEL
06:00	19:00	SICP 100psi SITP 75psi, OWU, BMW H/O Flushed w/ 30BW, Conti LD Rod String, LD & Inspect Rod Pmp(Lite Scale on Screen), XO For Tbg, ND B1, TAC Was Not Set, NU Weatherford BOP, RU Workfloor, RU & RIH w/ SL, Tagged Fill @ 5695' (31' of Fill on PB), POOH w/ 141- Jts (()) Breaking Collars & Appling Liquid O-Ring to Pins, LD 35- Jts & BHA on Trl, MU & RIH w/ Weatherford AS-1X Injection PKR, RU & RIH w/ SL to Seat Stnd Valv, 20BW to Fill, PT Tbg to 3000psi, Observ Press, 10psi Loss in 15Min, NO Press Loss in 45Min, GOOD TEST, Retrieve Stnd Valv, SWIFN 7:00 to 7:30PM c/Travl H/O Heated & Transfered 105Bbls Of Oil From Wtr Tk to Pro Tk #1
19:00	19:30	CREW TRAVEL

Report Start Date	Report End Date	24hr Activity Summary
3/18/2014	3/18/2014	SICP 100psi SITP 75psi, OWU, BMW H/O Flushed w/ 30BW, Conti LD Rod String, LD & Inspect Rod Pmp(Lite Scale on Screen), XO For Tbg, ND B1, TAC Was Not Set, NU Weatherford BOP, RU Workfloor, RU & RIH w/ SL, Tagged Fill @ 5695' (31' of Fill on PB), POOH w/ 141- Jts (()) Breaking Collars & Appling Liquid O-Ring to Pins, LD 35- Jts & BHA on Trl, MU & RIH w/ Weatherford AS-1X Injection PKR, RU & RIH w/ SL to Seat Stnd Valv, 20BW to Fill, PT Tbg to 3000psi, Observ Press, 10psi Loss in 15Min, NO Press Loss in 45Min, GOOD TEST, Retrieve Stnd Valve

Start Time	End Time	Comment
05:30	06:00	CREW TRAVEL
06:00	19:00	SICP 100psi SITP 75psi, OWU, BMW H/O Flushed w/ 30BW, Conti LD Rod String, LD & Inspect Rod Pmp(Lit Scale on Screen), XO For Tbg, ND B1, TAC Was Not Set, NU Weatherford BOP, RU Workfloor, RU & RIH w/ SL, Tagged Fill @ 5695' (31' of Fill on PB), POOH w/ 141- Jts (()) Breaking Collars & Appling Liquid O-Ring to Pins, LD 35- Jts & BHA on Trl, MU & RIH w/ Weatherford AS-1X Injection PKR, RU & RIH w/ SL to Seat Stnd Valv, 20BW to Fill, PT Tbg to 3000psi, Observ Press, 10psi Loss in 15Min, NO Press Loss in 45Min, GOOD TEST, Retrieve Stnd Valv, SWIFN
19:00	19:30	CREW TRAVEL

Report Start Date	Report End Date	24hr Activity Summary
3/20/2014	3/20/2014	Perform MIT

Start Time	End Time	Comment
09:00	09:30	On 03/18/2014 Chris Jensen with the State of Utah DOGM was contacted concerning the initial MIT on the above listed well. On 03/20/2014 the casing was pressured up to 1649 psig and charted for 30 minutes with no pressure loss. The well was not injecting during the test. The tubing pressure was 150 psig during the test. There was not a State representative available to witness the test.

NEWFIELD

Schematic

Well Name: Federal 6-19-9-16

Surface Legal Location	API/UWI	Well RC	Lease	State/Province	Field Name	County
19-9S-16E	43013331000000	500158544		Utah	GMBU CTB3	DUCHESNE

Spud Date	Rig Release Date	On Production Date	Original KB Elevation (ft)	Ground Elevation (ft)	Total Depth All (TVD) (ftKB)	PBTD (All) (ftKB)
5/13/2007	5/22/2007	6/12/2007	6,000	5,988		Original Hole - 5,726.2

Most Recent Job

Job Category	Primary Job Type	Secondary Job Type	Job Start Date	Job End Date
Production / Workover	Conversion	Basic	3/14/2014	3/20/2014

TD: 5,772.0 — Vertical - Original Hole, 9/2/2014 8:49:46 AM

MD (ftKB)	TVD (ftKB)	Incl (°)	DLS
			DLS (°...
11.8			
12.1			
323.2			
323.8			
4,385.2			
4,386.2			
4,387.5			
4,387.8			
4,395.0			
4,395.3			
4,399.3			
4,400.6			
4,400.9			
4,410.1			
4,418.0			
4,618.1			
4,674.9			
4,804.1			
4,834.0			
5,099.1			
5,107.0			
5,237.9			
5,253.9			
5,306.1			
5,314.0			
5,412.1			
5,425.9			
5,726.0			
5,726.7			
5,771.3			
5,772.0			

Vertical schematic (actual)

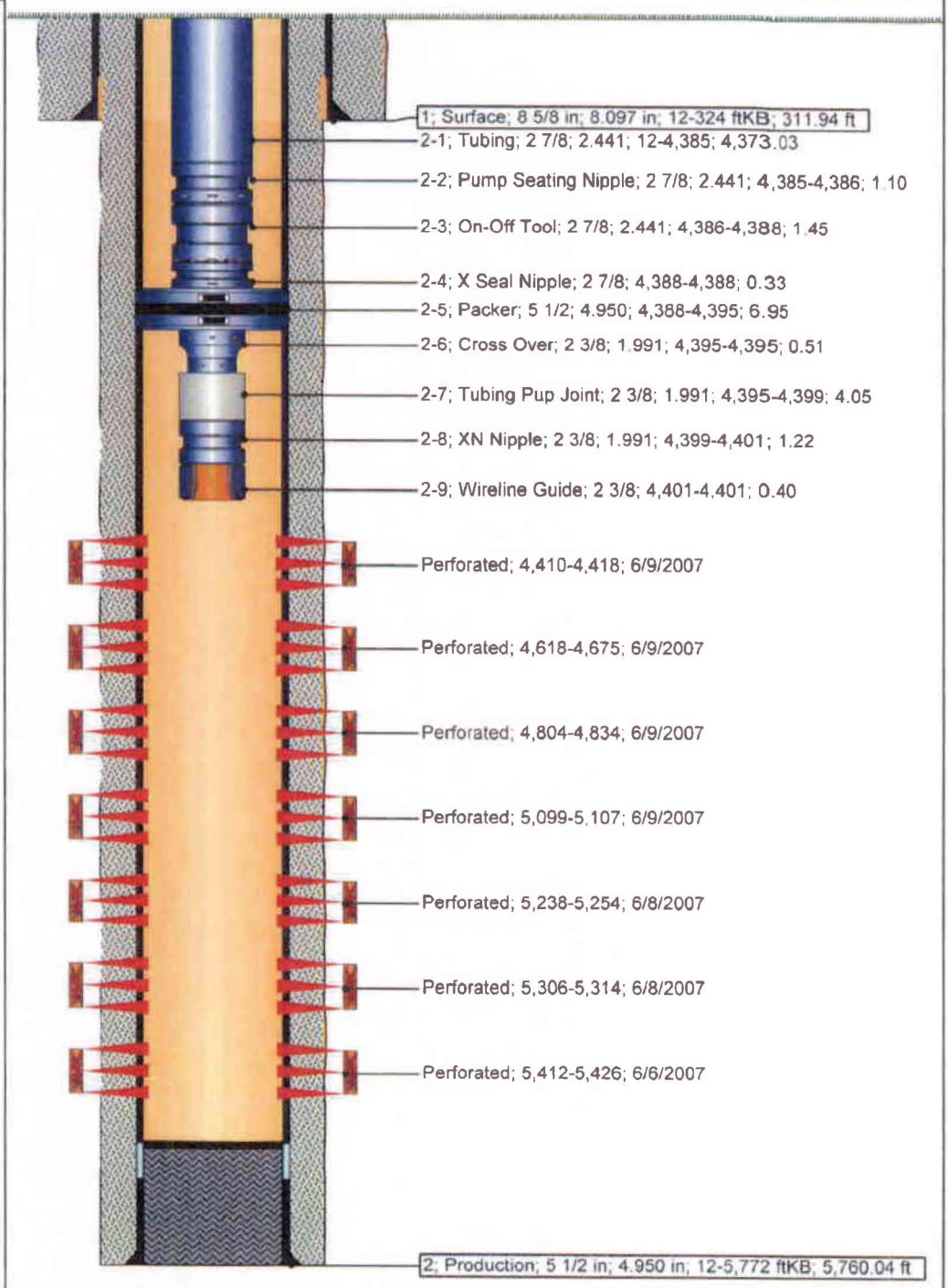

NEWFIELD

Newfield Wellbore Diagram Data
Federal 6-19-9-16

Surface Legal Location		API/UWI	Lease
19-9S-16E		43013331000000	
County: DUCHESNE	State/Province: Utah	Basin: Uintah Basin	Field Name: GMBU CTB3
Well Start Date: 5/13/2007	Spud Date: 5/13/2007	Final Rig Release Date: 5/22/2007	On Production Date: 6/12/2007
Original KB Elevation (ft): 6,000 / Ground Elevation (ft): 5,988	Total Depth (ftKB): 5,772.0	Total Depth All (TVD) (ftKB):	PBTD (All) (ftKB): Original Hole - 5,726.2

Casing Strings

Csg Des	Run Date	OD (in)	ID (in)	Wt/Len (lb/ft)	Grade	Set Depth (ftKB)
Surface	5/14/2007	8 5/8	8.097	24.00	J-55	324
Production	5/22/2007	5 1/2	4.950	15.50	J-55	5,772

Cement

String: Surface, 324ftKB 5/14/2007

Cementing Company	Top Depth (ftKB)	Bottom Depth (ftKB)	Full Return?	Vol Cement Ret (bbl)
BJ Services Company	12.0	323.9		

Fluid Description	Fluid Type	Amount (sacks)	Class	Estimated Top (ftKB)
Class "G" w/ 2% CaCL2 + 1/4#/sk Cello-Flake mixed @ 15.8 ppg 1.17 cf/sk yield	Lead	160	G	12.0

String: Production, 5,772ftKB 5/22/2007

Cementing Company	Top Depth (ftKB)	Bottom Depth (ftKB)	Full Return?	Vol Cement Ret (bbl)
BJ Services Company	12.0	5,772.0		

Fluid Description	Fluid Type	Amount (sacks)	Class	Estimated Top (ftKB)
Premlite II w/ 10% gel + 3 % KCL, 3#'s /sk CSE + 2# sk/kolseal + 1/2#'s/sk Cello Flake	Lead	300	PREMITE II	12.0
50/50 poz W/ 2% Gel + 3% KCL, .5%EC1,1/4# sk C.F. 2% gel. 3% SM mixed @ 14.4 ppg W/ 1.24 YLD	Tail	425	50/50 POZ	2,800.0

Tubing Strings

Tubing Description	Run Date	Set Depth (ftKB)
Tubing	3/14/2014	4,401.0

Item Des	Jts	OD (in)	ID (in)	Wt (lb/ft)	Grade	Len (ft)	Top (ftKB)	Btm (ftKB)
Tubing	141	2 7/8	2.441	6.50	J-55	4,373.03	12.0	4,385.0
Pump Seating Nipple		2 7/8	2.441			1.10	4,385.0	4,386.1
On-Off Tool		2 7/8	2.441			1.45	4,386.1	4,387.6
X Seal Nipple		2 7/8				0.33	4,387.6	4,387.9
Packer		5 1/2	4.950			6.95	4,387.9	4,394.9
Cross Over		2 3/8	1.991			0.51	4,394.9	4,395.4
Tubing Pup Joint		2 3/8	1.991			4.05	4,395.4	4,399.4
XN Nipple		2 3/8	1.991			1.22	4,399.4	4,400.6
Wireline Guide		2 3/8				0.40	4,400.6	4,401.0

Rod Strings

Rod Description	Run Date	Set Depth (ftKB)

Item Des	Jts	OD (in)	Wt (lb/ft)	Grade	Len (ft)	Top (ftKB)	Btm (ftKB)

Perforation Intervals

Stage#	Zone	Top (ftKB)	Btm (ftKB)	Shot Dens (shots/ft)	Phasing (°)	Nom Hole Dia (in)	Date
7	D1 SANDS, Original Hole	4,410	4,418	4			6/9/2007
6	B2 & 1 SANDS, Original Hole	4,618	4,675	4			6/9/2007
5	A3 & 1 SANDS, Original Hole	4,804	4,834	4			6/9/2007
4	LODC, Original Hole	5,099	5,107	4			6/9/2007
3	LODC, Original Hole	5,238	5,254	4			6/8/2007
2	CP1, Original Hole	5,306	5,314	4			6/8/2007
1	CP3 SANDS, Original Hole	5,412	5,426	4			6/6/2007

Stimulations & Treatments

Stage#	ISIP (psi)	Frac Gradient (psi/ft)	Max Rate (bbl/min)	Max PSI (psi)	Total Clean Vol (bbl)	Total Slurry Vol (bbl)	Vol Recov (bbl)
1	2,154	0.83					
1	2,154	0.83				371	
2	2,353					338	
3	2,569						
4	2,388					411	
5	2,309	0.91				625	
6	2,016	0.87				945	

NEWFIELD

Newfield Wellbore Diagram Data
Federal 6-19-9-16

Stimulations & Treatments

Stage#	ISIP (psi)	Frac Gradient (psi/ft)	Max Rate (bbl/min)	Max PSI (psi)	Total Clean Vol (bbl)	Total Slurry Vol (bbl)	Vol Recov (bbl)
7	1,650	0.81				369	

Proppant

Stage#	Total Prop Vol Pumped (lb)	Total Add Amount
1		
1	34,633	
2	24,825	
3	69,984	
4	44,824	
5	84,070	
6	136,676	
7	36,368	