NEWFIELD

November 22, 2005

State of Utah
Division of Oil, Gas & Mining
Attn: Diana Whitney
1594 West North Temple - Suite 1210
P.O. Box 145801
Salt Lake City, Utah 84114-5801

RE: Applications for Permit to Drill: Federal 2-22-9-16, 8-22-9-16, 5-23-9-16, 8-23-9-16, 6-24-9-16, and Sundance Federal 12-1-9-17.

Dear Diana:

Enclosed find APD's on the above referenced wells. The proposed 8-22-9-16 is an Exception Location. Our Land Department will send you the required Exception Location Letter. If you have any questions, feel free to give either Shon Mckinnon or myself a call.

Sincerely,

Mandie Crozier
Regulatory Specialist

mc
enclosures

RECEIVED
NOV 2 3 2005
DIV. OF OIL, GAS & MINING

Newfield Exploration Company 10530 South Country Road #33 Myton, UT 84052 (435) 646-3721 Fax (435) 646-3031

Form 3160-3
(September 2001)

FORM APPROVED
OMB No. 1004-0136
Expires January 31, 2004

UNITED STATES
DEPARTMENT OF THE INTERIOR
BUREAU OF LAND MANAGEMENT

APPLICATION FOR PERMIT TO DRILL OR REENTER

5. Lease Serial No.
UTU-15855

6. If Indian, Allottee or Tribe Name
N/A

7. If Unit or CA Agreement, Name and No.
N/A

8. Lease Name and Well No.
Federal 8-23-9-16

1a. Type of Work: [x] DRILL [ ] REENTER

1b. Type of Well: [x] Oil Well [ ] Gas Well [ ] Other [x] Single Zone [ ] Multiple Zone

2. Name of Operator
Newfield Production Company

9. API Well No.
43-013-32961

3a. Address
Route #3 Box 3630, Myton UT 84052

3b. Phone No. *(include area code)*
(435) 646-3721

10. Field and Pool, or Exploratory
Monument Butte

4. Location of Well *(Report location clearly and in accordance with any State requirements.*)*
At surface SE/NE 1891' FNL 535' FEL 578642X 40.01854
At proposed prod. zone 4430014Y -110.07848

11. Sec., T., R., M., or Blk. and Survey or Area
SE/NE Sec. 23, T9S R16E

14. Distance in miles and direction from nearest town or post office*
Approximatley 17.9 miles southwest of Myton, Utah

12. County or Parish
Duchesne

13. State
UT

15. Distance from proposed* location to nearest property or lease line, ft. (Also to nearest drig. unit line, if any) Approx. 1891' f/lse, NA' f/unit

16. No. of Acres in lease
1200.00

17. Spacing Unit dedicated to this well
40 Acres

18. Distance from proposed location* to nearest well, drilling, completed, applied for, on this lease, ft. Approx. 1526'

19. Proposed Depth
5810'

20. BLM/BIA Bond No. on file
UT0056

21. Elevations (Show whether DF, KDB, RT, GL, etc.)
5685' GL

22. Approximate date work will start*
1st Quarter 2006

23. Estimated duration
Approximately seven (7) days from spud to rig release.

24. Attachments

The following, completed in accordance with the requirements of Onshore Oil and Gas Order No.1, shall be attached to this form:

1. Well plat certified by a registered surveyor.
2. A Drilling Plan.
3. A Surface Use Plan (if the location is on National Forest System Lands, the SUPO shall be filed with the appropriate Forest Service Office).
4. Bond to cover the operations unless covered by an existing bond on file (see Item 20 above).
5. Operator certification.
6. Such other site specific information and/or plans as may be required by the authorized officer.

25. Signature
Mandie Crozier
Name *(Printed/Typed)*
Mandie Crozier
Date
11/22/05

Title
Regulatory Specialist

Approved by *(Signature)*
Name *(Printed/Typed)*
BRADLEY G. HILL
Date
11-29-05

Title
ENVIRONMENTAL SCIENTIST III
Office

Application approval does not warrant or certify the the applicant holds legal or equitable title to those rights in the subject lease which would entitle the applicant to conduct operations thereon.
Conditions of approval, if any, are attached.

Title 18 U.S.C. Section 1001 and Title 43 U.S.C. Section 1212, make it a crime for any person knowingly and willfully to make to any department or agency of the United States any false, fictitious or fraudulent statements or representations as to any matter within its jurisdiction.

**(Instructions on reverse)*

Federal Approval of this Action Is Necessary

RECEIVED
NOV 23 2005
DIV. OF OIL, GAS & MINING

T9S, R16E, S.L.B.&M.

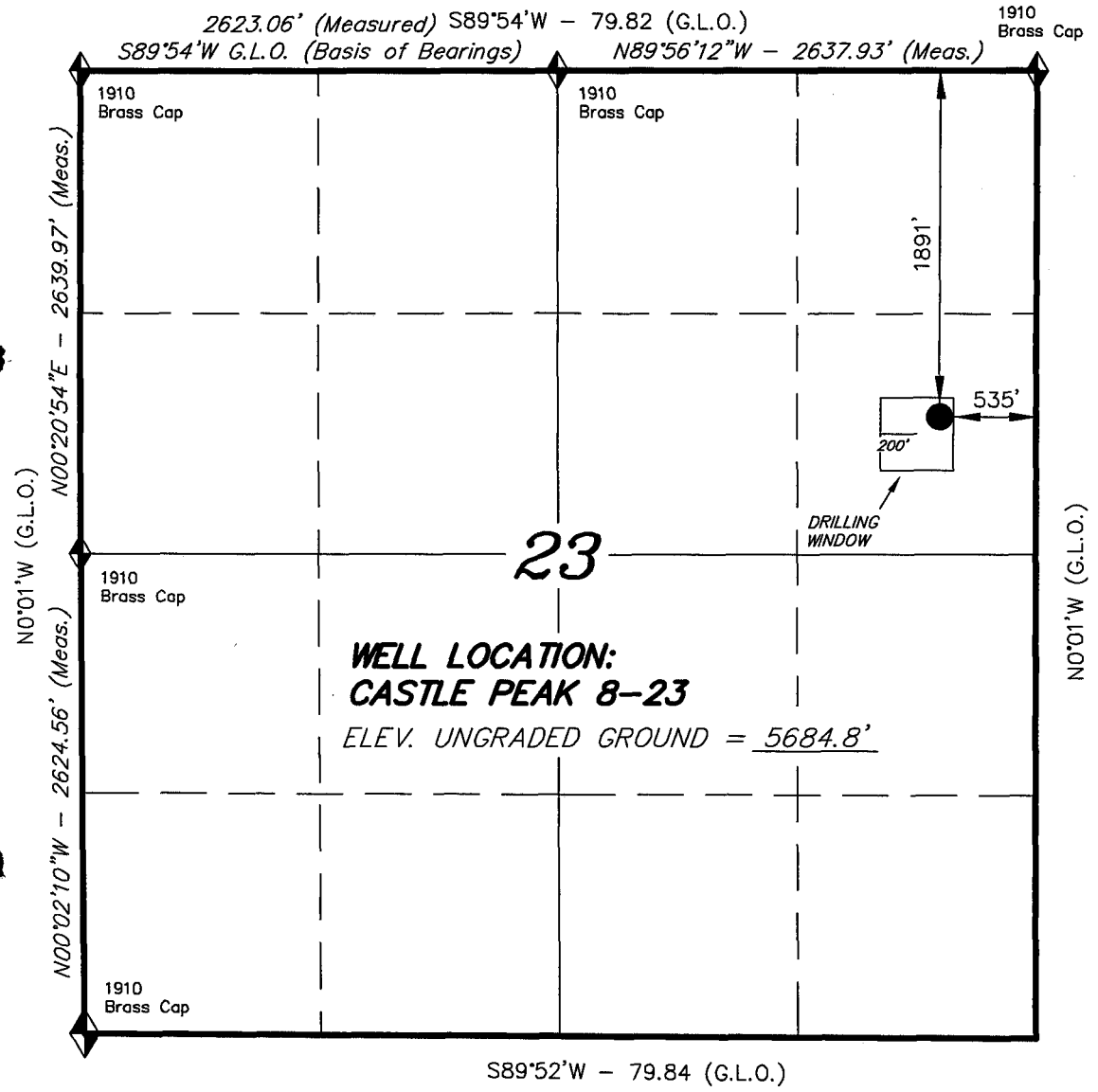

◆ = SECTION CORNERS LOCATED

BASIS OF ELEV; U.S.G.S. 7-1/2 min QUAD (MYTON SE)

NEWFIELD PRODUCTION COMPANY

WELL LOCATION, CASTLE PEAK 8-23, LOCATED AS SHOWN IN THE SE 1/4 NE 1/4 OF SECTION 23, T9S, R16E, S.L.B.&M. DUCHESNE COUNTY, UTAH.

N

Note:
The Proposed Well head bears S16°12'51"W 1969.15' from the Northeast Corner of Section 23.

THIS IS TO CERTIFY THAT THE ABOVE PLAT WAS PREPARED FROM FIELD NOTES OF ACTUAL SURVEYS MADE BY ME OR UNDER MY SUPERVISION AND THAT THE SAME ARE TRUE AND CORRECT TO THE BEST OF MY KNOWLEDGE AND BELIEF.

STACY W. STEWART
REGISTERED LAND SURVEYOR
REGISTRATION No. 189377
STATE OF UTAH

REGISTERED LAND SURVEYOR No. 189377 STATE OF UTAH

TRI STATE LAND SURVEYING & CONSULTING
180 NORTH VERNAL AVE. – VERNAL, UTAH 84078
(435) 781-2501

SCALE: 1" = 1000'	SURVEYED BY: D.P.
DATE: 10-4-05	DRAWN BY: F.T.M.
NOTES:	FILE #

NEWFIELD PRODUCTION COMPANY
FEDERAL #8-23-9-16
SE/NE SECTION 23, T9S, R16E
DUCHESNE COUNTY, UTAH

ONSHORE ORDER NO. 1

DRILLING PROGRAM

1. ***GEOLOGIC SURFACE FORMATION:***

Uinta formation of Upper Eocene Age

2. ***ESTIMATED TOPS OF IMPORTANT GEOLOGIC MARKERS:***

Uinta	0' – 1915'
Green River	1915'
Wasatch	5810'

3. ***ESTIMATED DEPTHS OF ANTICIPATED WATER, OIL, GAS OR MINERALS:***

Green River Formation 1915' – 5810' - Oil

4. ***PROPOSED CASING PROGRAM***

Please refer to the Monument Butte Field Standard Operation Procedure (SOP).

5. ***MINIMUM SPECIFICATIONS FOR PRESSURE CONTROL:***

Please refer to the Monument Butte Field SOP. See Exhibit "C".

6. ***TYPE AND CHARACTERISTICS OF THE PROPOSED CIRCULATION MUDS:***

Please refer to the Monument Butte Field SOP.

7. ***AUXILIARY SAFETY EQUIPMENT TO BE USED:***

Please refer to the Monument Butte Field SOP.

8. ***TESTING, LOGGING AND CORING PROGRAMS:***

Please refer to the Monument Butte Field SOP.

9. ***ANTICIPATED ABNORMAL PRESSURE OR TEMPERATURE:***

The anticipated maximum bottom hole pressure is 1800 psi. It is not anticipated that abnormal temperatures will be encountered.

10. ***ANTICIPATED STARTING DATE AND DURATION OF THE OPERATIONS:***

Please refer to the Monument Butte Field SOP.

NEWFIELD PRODUCTION COMPANY
FEDERAL #8-23-9-16
SE/NE SECTION 23, T9S, R16E
DUCHESNE COUNTY, UTAH

ONSHORE ORDER NO. 1

MULTI-POINT SURFACE USE & OPERATIONS PLAN

1. EXISTING ROADS

See attached Topographic Map "A"

To reach Newfield Production Company well location site Federal #8-23-9-16 located in the SE 1/4 NE 1/4 Section 23, T9S, R16E, Duchesne County, Utah:

Proceed southwesterly out of Myton, Utah along Highway 40 - 1.6 miles ± to the junction of this highway and UT State Hwy 53; proceed southeasterly – 11.7 miles ± to it's junction with an existing dirt road to the southwest; proceed southwesterly – 4.6 miles ± to it's junction with the beginning of the proposed access road; proceed northwesterly along the proposed access road – 320'± to the proposed well location.

2. PLANNED ACCESS ROAD

See Topographic Map "B" for the location of the proposed access road.

3. LOCATION OF EXISTING WELLS

Refer to Exhibit "B".

4. LOCATION OF EXISTING AND/OR PROPOSED FACILITIES

All permanent surface equipment will be painted Carlsbad Canyon.
Please refer to the Monument Butte Field Standard Operating Procedure (SOP).

5. LOCATION AND TYPE OF WATER SUPPLY

Please refer to the Monument Butte Field SOP. See Exhibit "A".

6. SOURCE OF CONSTRUCTION MATERIALS

Please refer to the Monument Butte Field SOP.

7. METHODS FOR HANDLING WASTE DISPOSAL

Please refer to the Monument Butte Field SOP.

8. ANCILLARY FACILITIES

Please refer to the Monument Butte Field SOP.

9. *WELL SITE LAYOUT*

See attached Location Layout Diagram.

10. *PLANS FOR RESTORATION OF SURFACE*

Please refer to the Monument Butte Field SOP.

11. *SURFACE OWNERSHIP* - Bureau Of Land Management

12. *OTHER ADDITIONAL INFORMATION*

The Archaeological Resource Survey and Paleontological Resource Survey for this area are attached. MOAC Report # 05-270, 9/7/05. Paleontological Resource Survey prepared by, Wade E. Miller, 9/28/05. See attached report cover pages, Exhibit "D".

For the Federal #8-23-9-16 Newfield Production Company requests 320' of disturbed area be granted in Lease UTU-15855 to allow for construction of the proposed access road. **Refer to Topographic Map "B".** The proposed access road will be an 18' crown road (9' either side of the centerline) with drainage ditches along either side of the proposed road whether it is deemed necessary in order to handle any run-off from normal meteorological conditions that are prevalent to this area. The maximum grade will be less than 8%. There will be no culverts required along this access road. There will be barrow ditches and turnouts as needed along this road. There are no fences encountered along this proposed road. There will be no new gates or cattle guards required. All construction material for this access road will be borrowed material accumulated during construction of the access road.

Newfield Production Company requests 320' of disturbed area be granted in Lease UTU-15855 to allow for construction of the proposed gas lines. It is proposed that the disturbed area will be 50' wide to allow for construction of a buried 6" gas gathering line, and a buried 3" poly fuel gas line. Both lines will tie in to the existing pipeline infrastructure. **Refer to Topographic Map "C."** For a ROW plan of development, please refer to the Monument Butte Field SOP.

Water Disposal
Immediately upon first production, all produced water will be confined to a steel storage tank. If the production water meets quality guidelines, it is transported to the Ashley, Monument Butte, Jonah, and Beluga water injection facilities by company or contract trucks. Subsequently, the produced water is injected into approved Class II wells to enhance Newfield's secondary recovery project.

Water not meeting quality criteria, is disposed at Newfield's Pariette #4 disposal well (Sec. 7, T9S R19E) or at State of Utah approved surface disposal facilities.

Threatened, Endangered, And Other Sensitive Species
Golden Eagle: Due to this proposed well access roads proximity (less that 0.5 mile) to an existing inactive golden eagle nest site, no new construction or surface disturbing activities will be allowed between March 1 and June 30. If the nest remains inactive on June 30th (based on a pre-construction survey by a qualified biologist), the operator may construct and drill the location between June 30 and March 1 of the following year. If the nest site becomes active prior to June 30, no new construction or surface disturbing activities will be allowed within 0.5 mile of the nest until the nest becomes inactive for two full breeding seasons. In the event that this well becomes a producing well, it must be equipped with a multi-cylinder engine or hospital muffler to reduce noise levels.

Reserve Pit Liner
A 12 mil liner with felt is required. Please refer to the Monument Butte Field SOP.

Location and Reserve Pit Reclamation
Please refer to the Monument Butte Field SOP.

The following seed mixture will be used on the topsoil stockpile, to the recontoured surface of the reserve pit, and for final reclamation: (All poundages are in pure live seed)

Crested Wheatgrass	*Agropyron Cristatum*	12 lbs/acre

Details of the On-Site Inspection
The proposed Federal #8-23-9-16 was on-sited on 8/31/05. The following were present; Shon Mckinnon (Newfeild Production) and Todd MaGrath (Bureau of Landmanagement). Weather conditions were clear and ground cover was 100% open.

13. LESSEE'S OR OPERATORS REPRESENTATIVE AND CERTIFICATION

Representative

Name:	Shon Mckinnon
Address:	Route #3 Box 3630
	Myton, UT 84052
Telephone:	(435) 646-3721

Certification

Please be advised that NEWFIELD PRODUCTION COMPANY is considered to be the operator of well #8-23-9-16 SE/NE Section 23, Township 9S, Range 16E: Lease UTU-15855 Duchesne County, Utah: and is responsible under the terms and conditions of the lease for the operations conducted upon the leased lands. Bond coverage is provided by Hartford Accident #4488944.

I hereby certify that the proposed drillsite and access route have been inspected, and I am familiar with the conditions which currently exist; that the statements made in this plan are true and correct to the best of my knowledge; and that the work associated with the operations proposed here will be performed by Newfield Production Company and its contractors and subcontractors in conformity with this plan and the terms and conditions under which it is approved. This statement is subject to the provisions of 18 U.S.C. 1001 for the filing of a false statement.

November 22, 2005
Date

Mandie Crozier
Regulatory Specialist
Newfield Production Company

NEWFIELD PRODUCTION COMPANY

CASTLE PEAK 8-23

Section 23, T9S, R16E, S.L.B.&M.

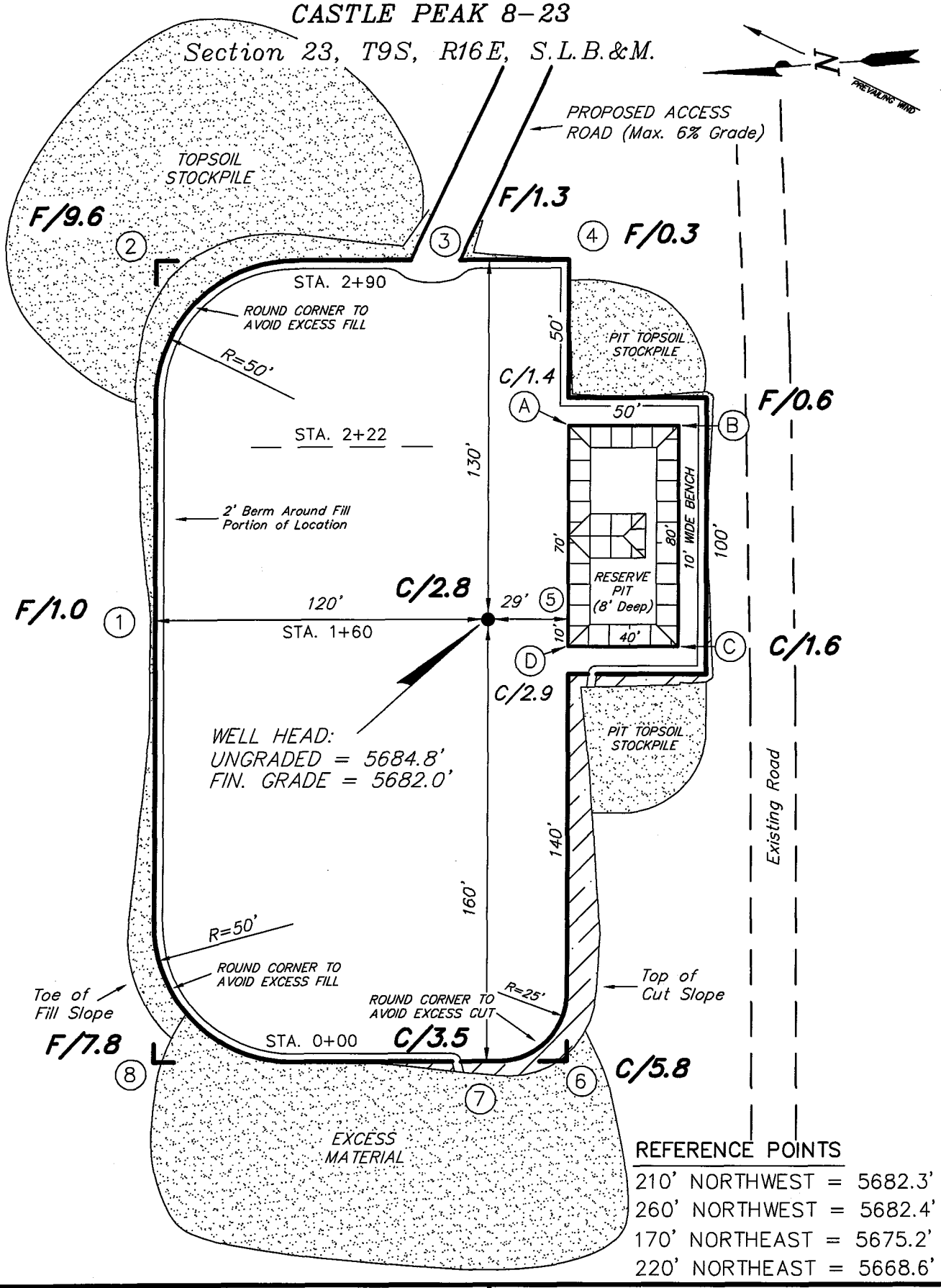

REFERENCE POINTS

210' NORTHWEST = 5682.3'
260' NORTHWEST = 5682.4'
170' NORTHEAST = 5675.2'
220' NORTHEAST = 5668.6'

SURVEYED BY:	D.P.	SCALE:	1" = 50'
DRAWN BY:	F.T.M.	DATE:	10-4-05

Tri State Land Surveying, Inc.
180 NORTH VERNAL AVE. VERNAL, UTAH 84078
(435) 781-2501

NEWFIELD PRODUCTION COMPANY

CROSS SECTIONS

CASTLE PEAK 8-23

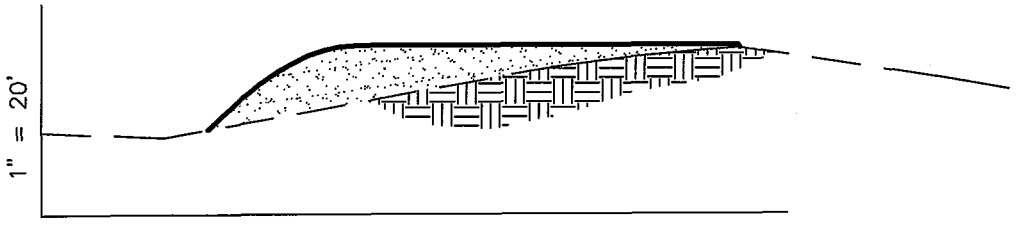

1" = 50'

STA. 2+90

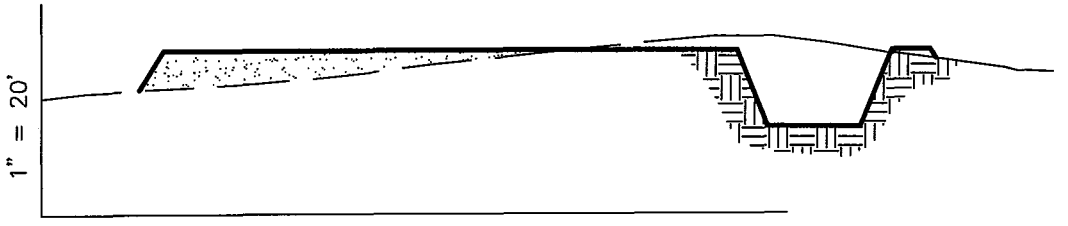

1" = 50'

STA. 2+22

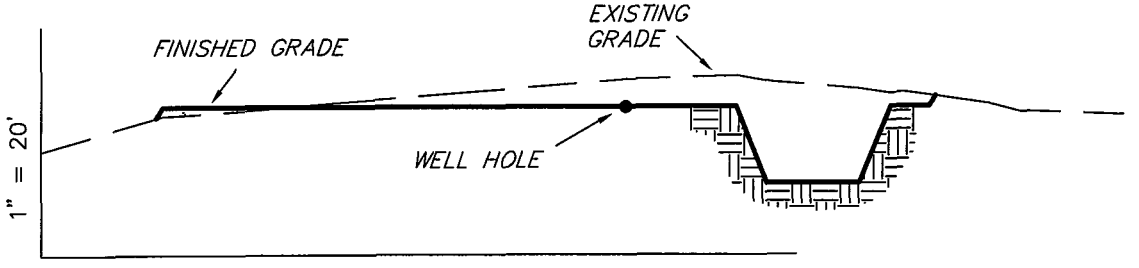

1" = 50'

STA. 1+60

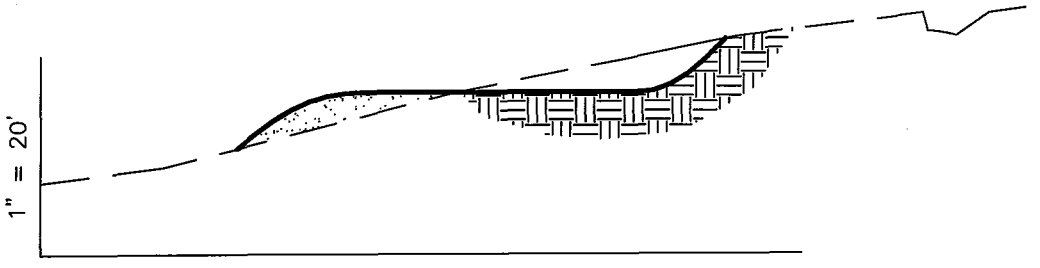

1" = 50'

STA. 0+00

NOTE:
UNLESS OTHERWISE NOTED
ALL CUT/FILL SLOPES ARE
AT 1.5:1

ESTIMATED EARTHWORK QUANTITIES
(No Shrink or swell adjustments have been used)
(Expressed in Cubic Yards)

ITEM	CUT	FILL	6" TOPSOIL	EXCESS
PAD	2,270	2,270	Topsoil is not included in Pad Cut	0
PIT	640	0		640
TOTALS	2,910	2,270	960	640

SURVEYED BY:	D.P.	SCALE:	1" = 50'
DRAWN BY:	F.T.M.	DATE:	10-4-05

Tri State Land Surveying, Inc.
(435) 781-2501
180 NORTH VERNAL AVE. VERNAL, UTAH 84078

NEWFIELD PRODUCTION COMPANY

TYPICAL RIG LAYOUT

CASTLE PEAK 8-23

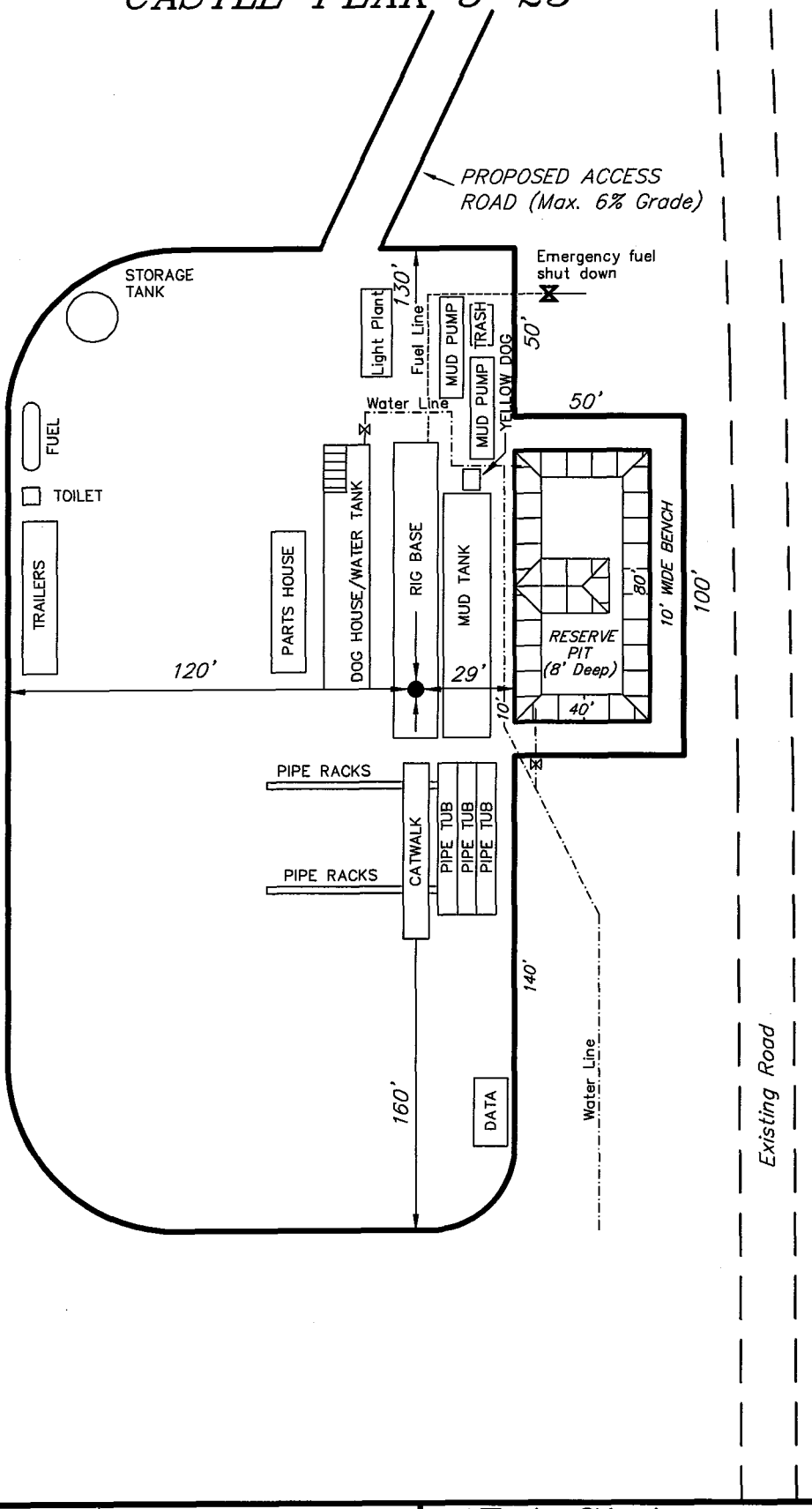

SURVEYED BY:	D.P.	SCALE:	1" = 50'
DRAWN BY:	F.T.M.	DATE:	10-4-05

Tri State Land Surveying, Inc.
180 NORTH VERNAL AVE. VERNAL, UTAH 84078
(435) 781-2501

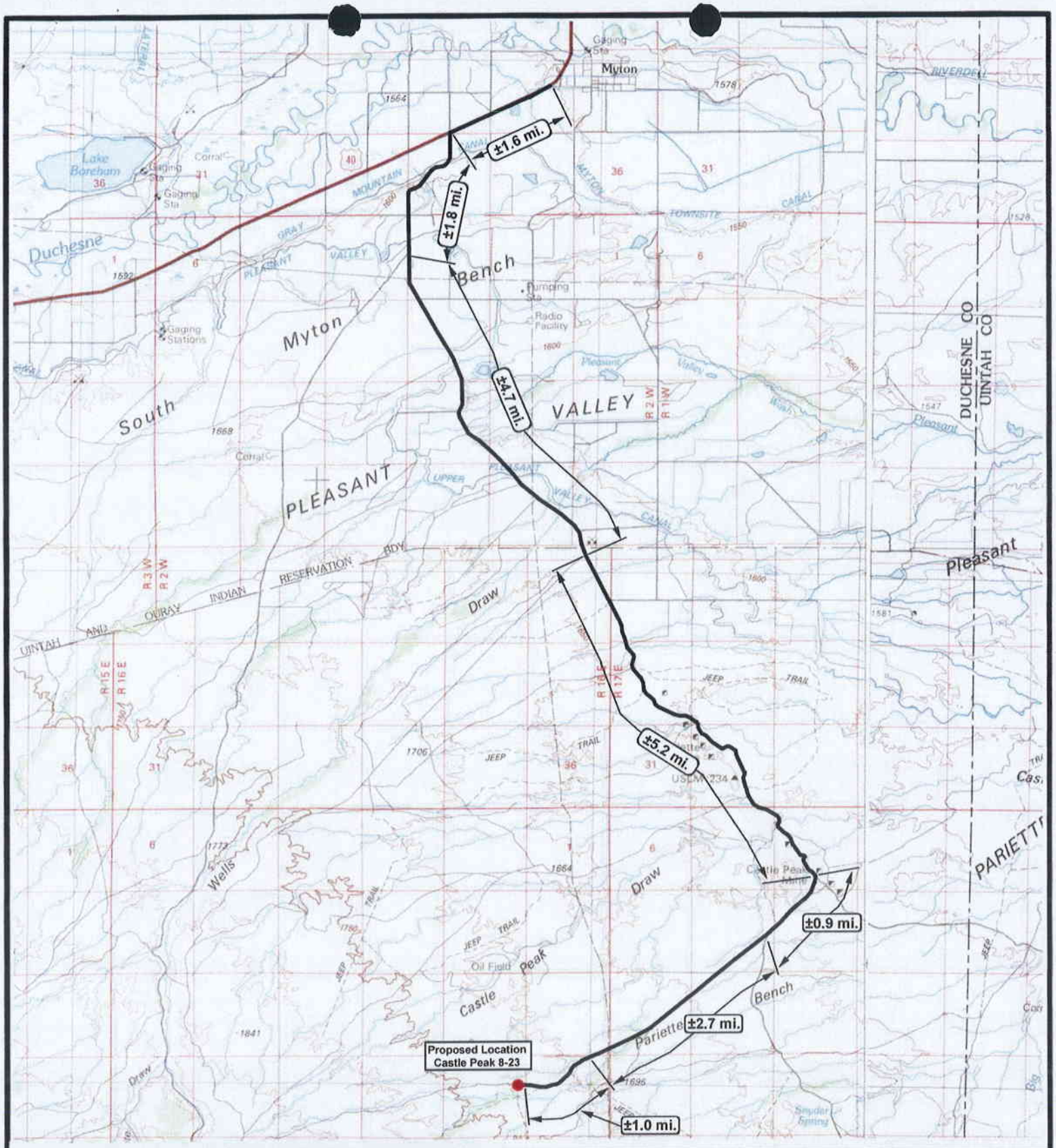

NEWFIELD
Exploration Company

Castle Peak 8-23-9-16
SEC. 23, T9S, R16E, S.L.B.&M.

N

Tri-State Land Surveying Inc.
(435) 781-2501
180 North Vernal Ave. Vernal, Utah 84078

SCALE: 1 = 100,000
DRAWN BY: mw
DATE: 10-06-2005

Legend
Existing Road
Proposed Access

TOPOGRAPHIC MAP
"A"

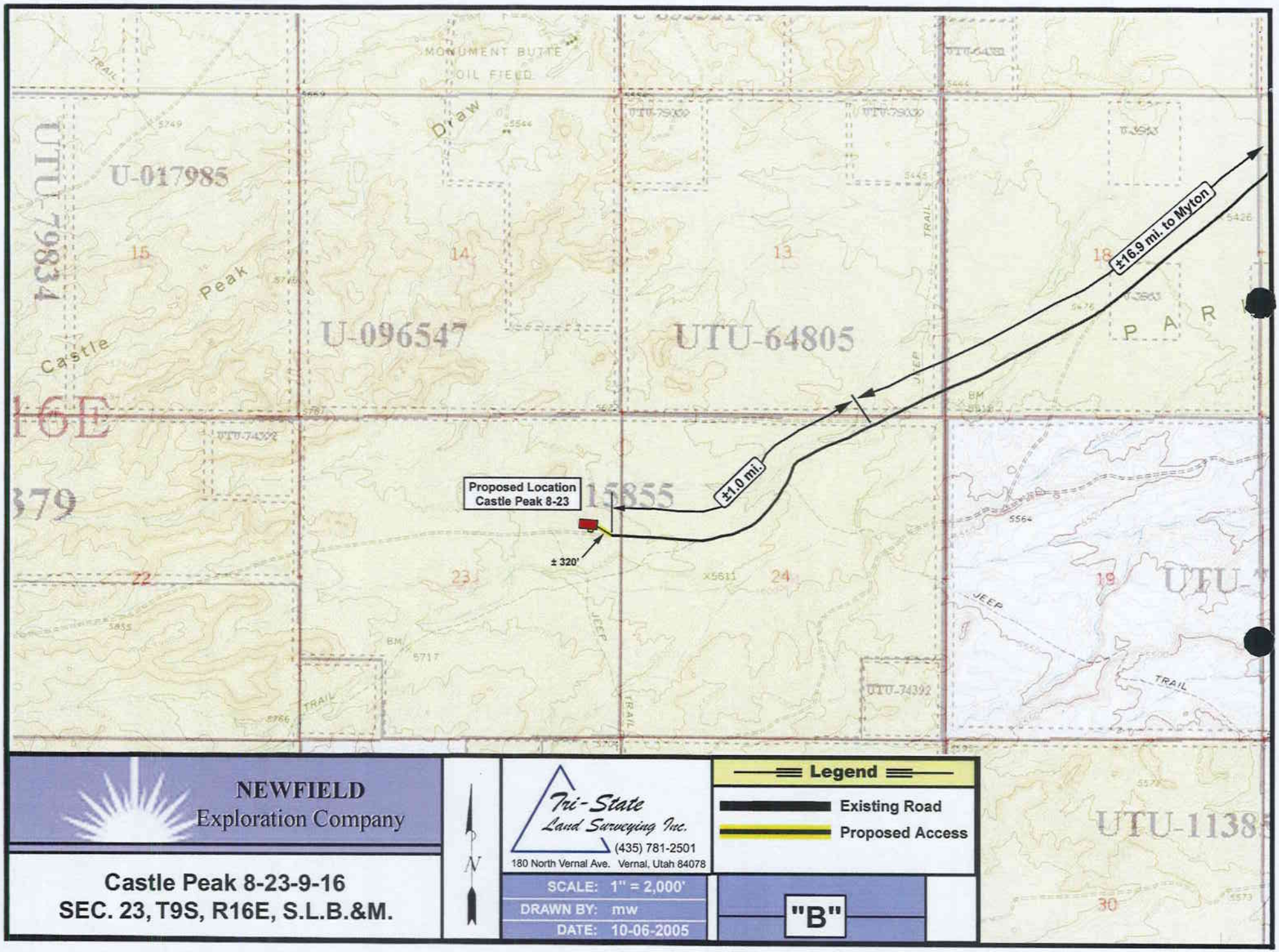
MONUMENT BUTTE
OIL FIELD
Draw
Castle
Peak
U-017985
U-096547
UTU-64805
UTU-79834
UTU-74392
15
14
13
18
23
24
19
22
30
Proposed Location
Castle Peak 8-23
±1.0 mi.
±16.9 mi. to Myton
± 320'
JEEP
TRAIL
NEWFIELD
Exploration Company
Castle Peak 8-23-9-16
SEC. 23, T9S, R16E, S.L.B.&M.
N
Tri-State
Land Surveying Inc.
(435) 781-2501
180 North Vernal Ave. Vernal, Utah 84078
SCALE: 1" = 2,000'
DRAWN BY: mw
DATE: 10-06-2005
Legend
Existing Road
Proposed Access
"B"

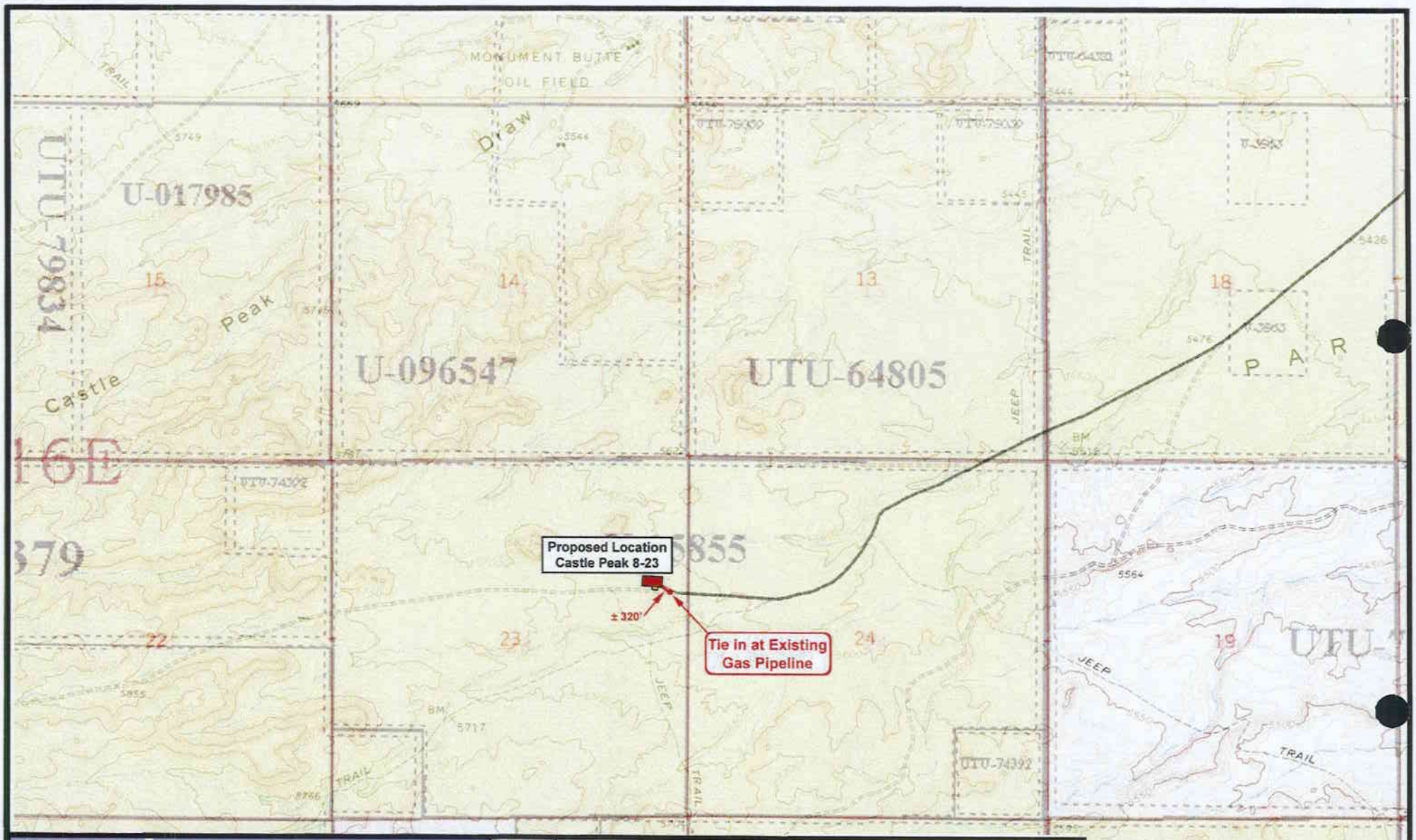

NEWFIELD
Exploration Company

Castle Peak 8-23-9-16
SEC. 23, T9S, R16E, S.L.B.&M.

N

Tri-State Land Surveying Inc.
(435) 781-2501
180 North Vernal Ave. Vernal, Utah 84078

SCALE: 1" = 2,000'
DRAWN BY: mw
DATE: 10-06-2005

Legend
Roads
Proposed Gas Line

"C"

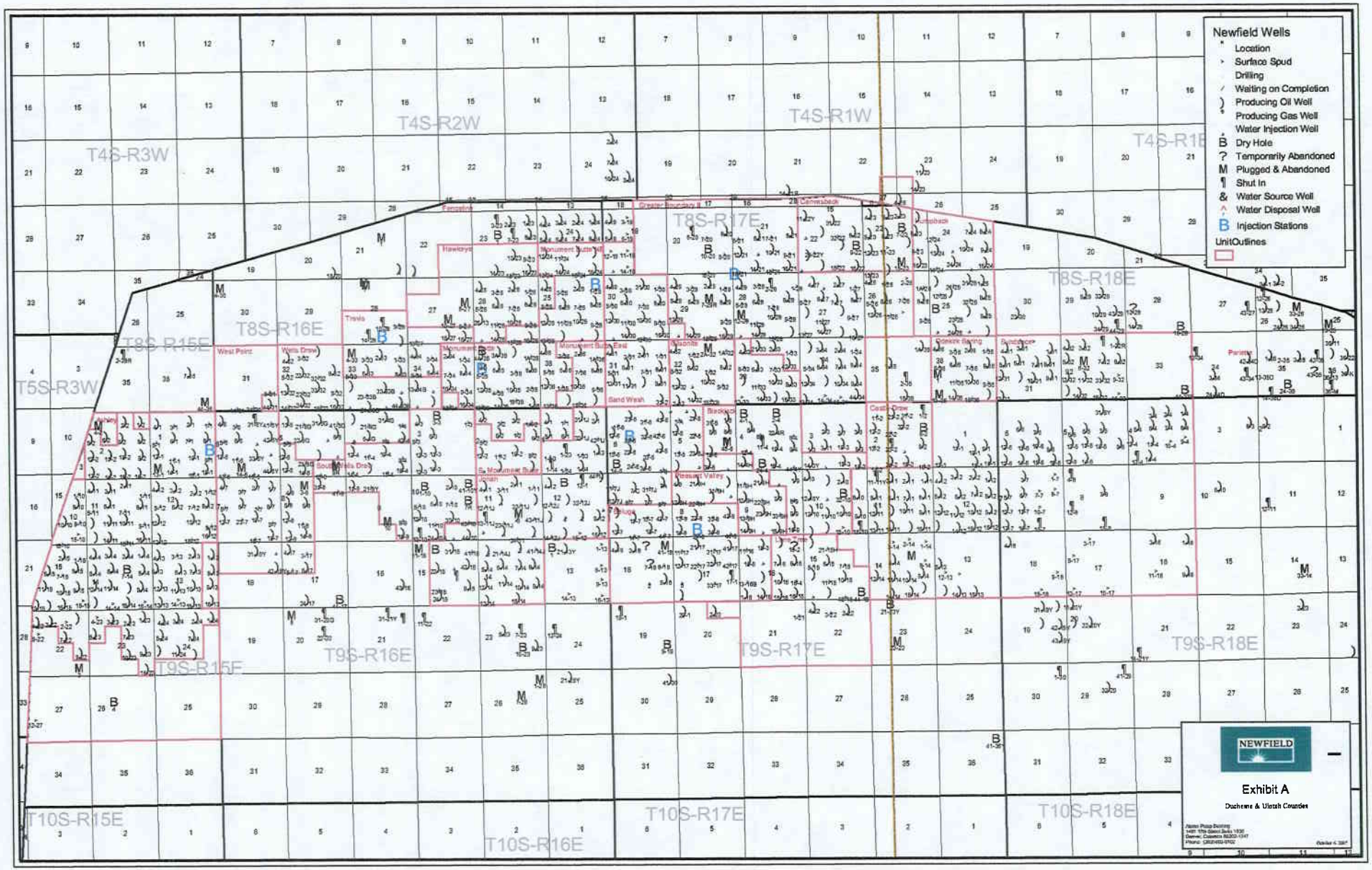
Newfield Wells
Location
Surface Spud
Drilling
Waiting on Completion
Producing Oil Well
Producing Gas Well
Water Injection Well
Dry Hole
Temporarily Abandoned
Plugged & Abandoned
Shut In
Water Source Well
Water Disposal Well
Injection Stations
UnitOutlines
T4S-R3W
T4S-R2W
T4S-R1W
T4S-R1E
T8S-R17E
T8S-R18E
T8S-R16E
T8S-R15E
T5S-R3W
T9S-R16E
T9S-R15E
T9S-R17E
T9S-R18E
T10S-R15E
T10S-R16E
T10S-R17E
T10S-R18E
NEWFIELD
Exhibit A
Duchesne & Uintah Counties

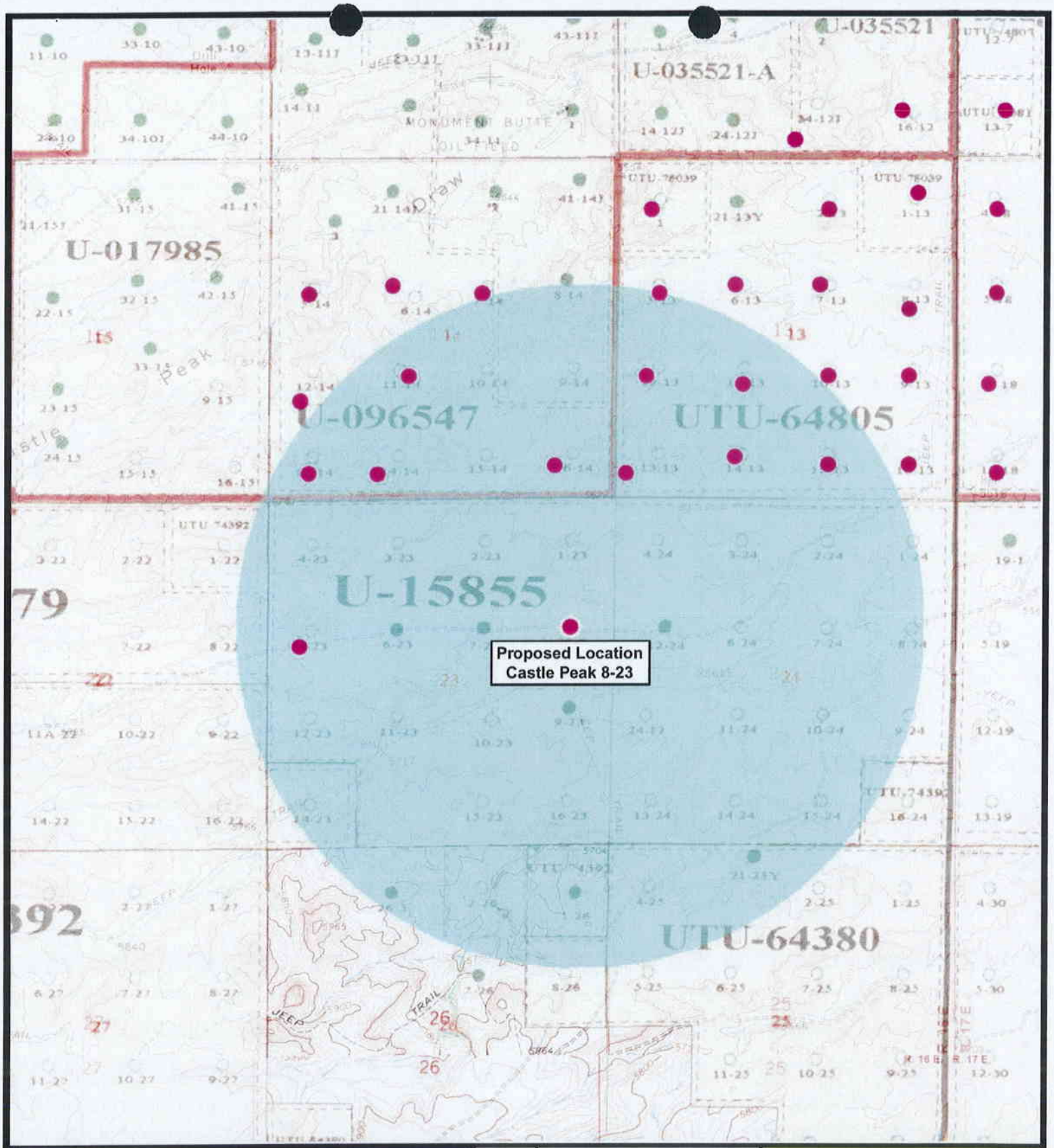

NEWFIELD
Exploration Company

Castle Peak 8-23-9-16
SEC. 23, T9S, R16E, S.L.B.&M.

N

Tri-State Land Surveying Inc.
(435) 781-2501
180 North Vernal Ave. Vernal, Utah 84078

SCALE: 1" = 2,000'
DRAWN BY: mw
DATE: 10-06-2005

Legend

- Well Locations
- One-Mile Radius

Exhibit "B"

2-M SYSTEM

Blowout Prevention Equipment Systems

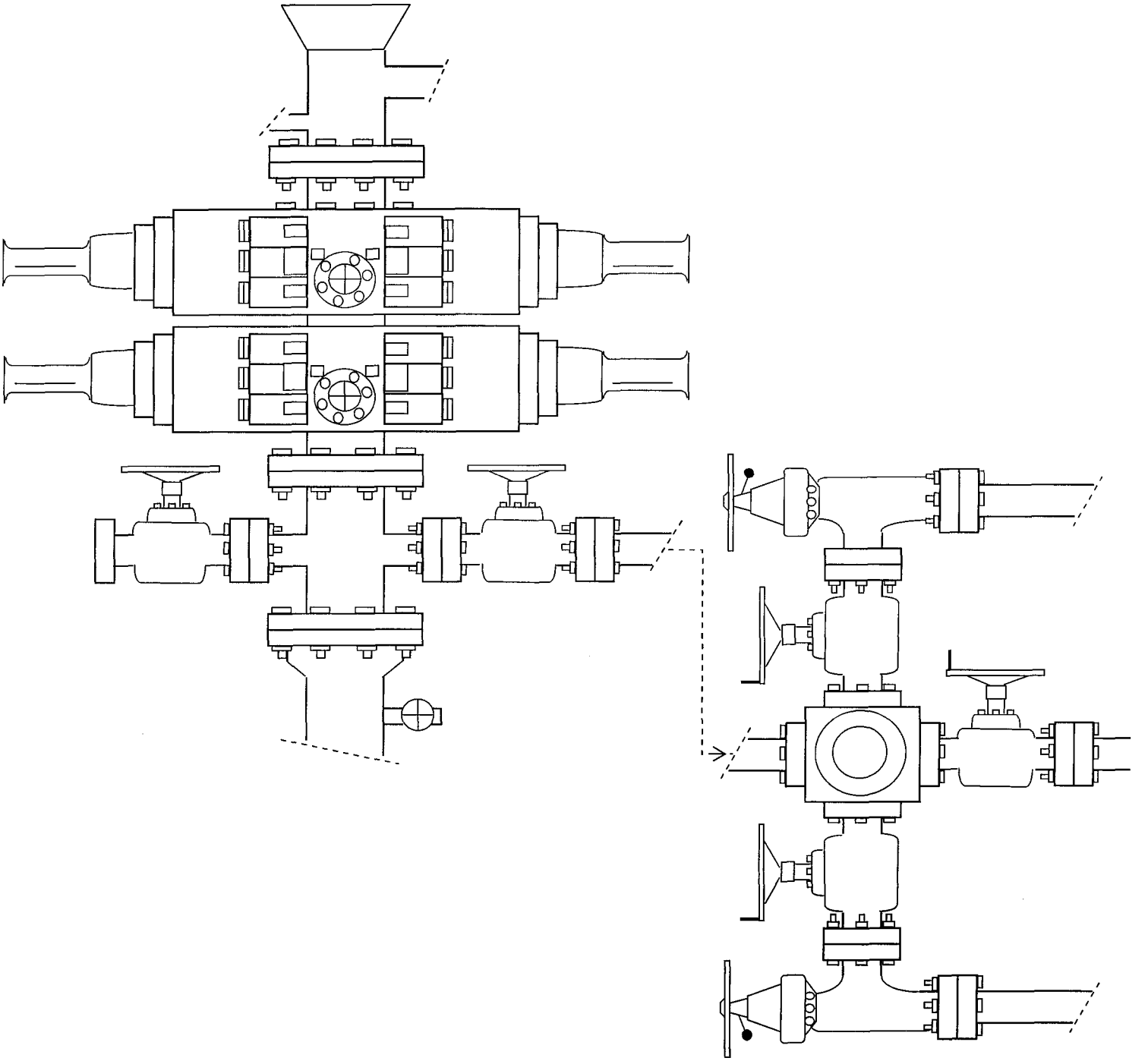

EXHIBIT C

Exhibit "D"
Page 1 of 2

CULTURAL RESOURCE INVENTORY OF NEWFIELD EXPLORATION'S BLOCK PARCEL IN TOWNSHIP 9S, RANGE 16E, SECTION 23 and 24, DUCHESNE COUNTY, UTAH

By:

Andre' Jendresen
and
Keith Montgomery

Prepared For:

Bureau of Land Management Vernal Field Office

Prepared Under Contract With:

Newfield Exploration Company
Rt. 3 Box 3630
Myton, UT 84052

Submitted By:

Keith R. Montgomery
Montgomery Archaeological Consultants, Inc.
P.O. Box 147
Moab, Utah 84532

MOAC Report No. 05-270

September 7, 2005

United States Department of Interior (FLPMA)
Permit No. 05-UT-60122

State of Utah Antiquities Project (Survey)
Permit No. U-05-MQ-0831b

NEWFIELD PRODUCTION COMPANY

PALEONTOLOGICAL FIELD SURVEY OF PROPOSED PRODUCTION DEVELOPMENT AREAS, DUCHESNE COUNTY, UTAH

SW 1/4, SE 1/4, and SW 1/4, Section 9 [9,11,12,13 & 14-9-9-16]; Entire Section 22 (excluding NE 1/4, NE 1/4 & NW 1/4, NW 1/4) [2,3,5 through16-9-9-16]; Entire Section 23 (excluding SE 1/4, NW 1/4, SW 1/4, NE 1/4, NE 1/4 & NW 1/4, SE 1/4) [1 through 5, 8,11 through 16-9-916]; Entire Section 24 (excluding SW 1/4, NW 1/4) [1 through 4, 6 through 16-9-9-16] all in Township 9 South, Range 16 East

REPORT OF SURVEY

Prepared for:

Newfield Production Company

Prepared by:

Wade E. Miller
Consulting Paleontologist
September 28, 2005

WORKSHEET
APPLICATION FOR PERMIT TO DRILL

APD RECEIVED: 11/23/2005

API NO. ASSIGNED: 43-013-32961

WELL NAME: FEDERAL 8-23-9-16

OPERATOR: NEWFIELD PRODUCTION (N2695)

CONTACT: MANDIE CROZIER

PHONE NUMBER: 435-646-3721

PROPOSED LOCATION:

SENE 23 090S 160E

SURFACE: 1891 FNL 0535 FEL

BOTTOM: 1891 FNL 0535 FEL

DUCHESNE

MONUMENT BUTTE (105)

LEASE TYPE: 1 - Federal

LEASE NUMBER: UTU-15855

SURFACE OWNER: 1 - Federal

PROPOSED FORMATION: GRRV

COALBED METHANE WELL? NO

INSPECT LOCATN BY: / /

Tech Review	Initials	Date
Engineering		
Geology		
Surface		

LATITUDE: 40.01856

LONGITUDE: -110.0785

RECEIVED AND/OR REVIEWED:

✓ Plat

✓ Bond: Fed[1] Ind[] Sta[] Fee[]
(No. UT0056)

N Potash (Y/N)

N Oil Shale 190-5 (B) or 190-3 or 190-13

✓ Water Permit
(No. MUNICIPAL)

N RDCC Review (Y/N)
(Date:)

NA Fee Surf Agreement (Y/N)

NA Intent to Commingle (Y/N)

LOCATION AND SITING:

___ R649-2-3.

Unit ___

✓ R649-3-2. General
Siting: 460 From Qtr/Qtr & 920' Between Wells

___ R649-3-3. Exception

___ Drilling Unit
Board Cause No: ___
Eff Date: ___
Siting: ___

___ R649-3-11. Directional Drill

COMMENTS: Sep, Seperate file

STIPULATIONS: 1- Federal Approval
2- Spacing Stip

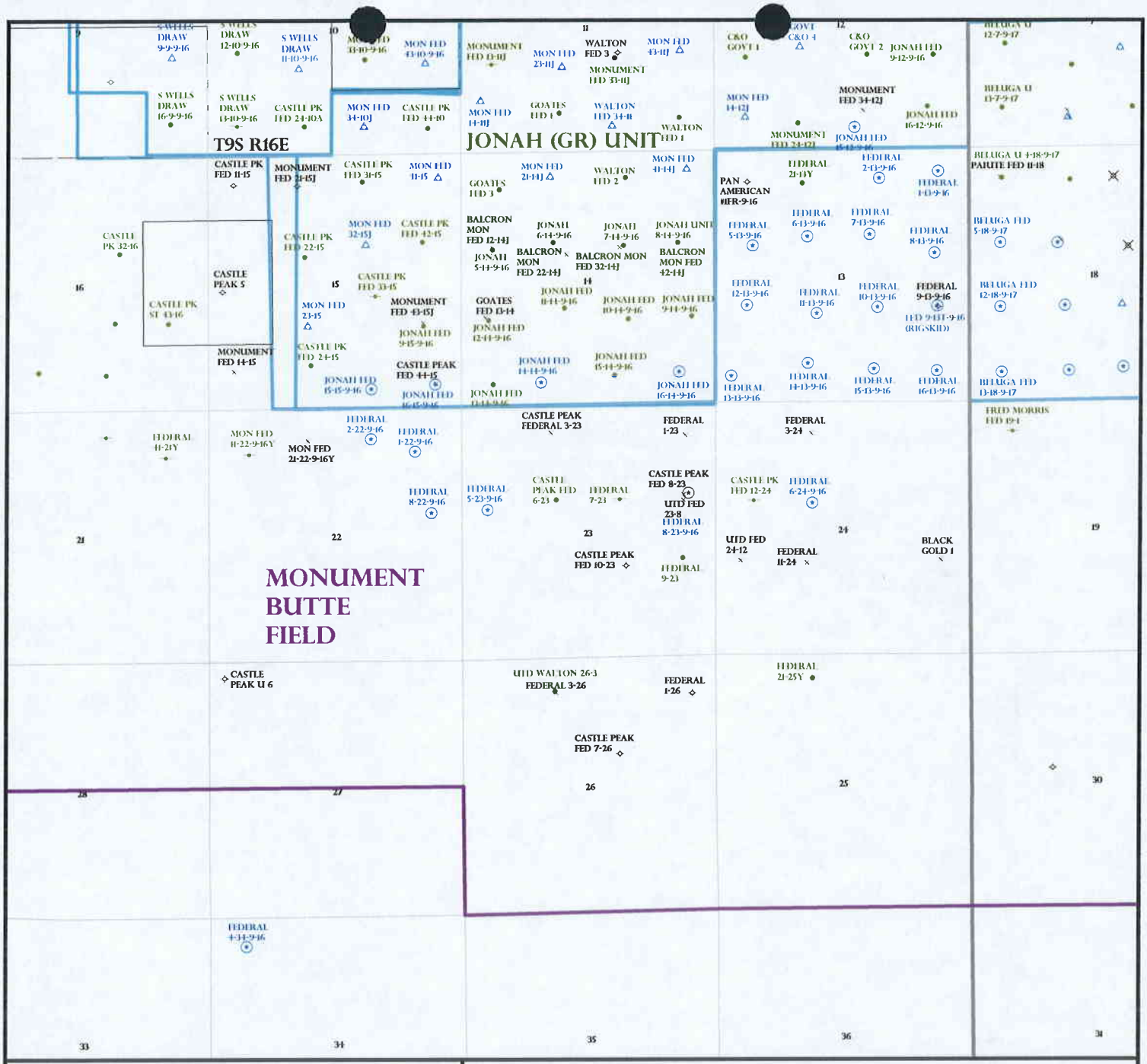

OPERATOR: NEWFIELD PROD CO (N2695)

SEC: 22,23,24 **T.** 9S **R.** 16E

FIELD: MONUMENT BUTTE (105)

COUNTY: DUCHESNE

SPACING: R649-3-2 / GENERAL SITING

Field Status
- ABANDONED
- ACTIVE
- COMBINED
- INACTIVE
- PROPOSED
- STORAGE
- TERMINATED

Unit Status
- EXPLORATORY
- GAS STORAGE
- NF PP OIL
- NF SECONDARY
- PENDING
- PI OIL
- PP GAS
- PP GEOTHERML
- PP OIL
- SECONDARY
- TERMINATED

Wells Status
- GAS INJECTION
- GAS STORAGE
- LOCATION ABANDONED
- NEW LOCATION
- PLUGGED & ABANDONED
- PRODUCING GAS
- PRODUCING OIL
- SHUT-IN GAS
- SHUT-IN OIL
- TEMP. ABANDONED
- TEST WELL
- WATER INJECTION
- WATER SUPPLY
- WATER DISPOSAL
- DRILLING

Utah Oil Gas and Mining

N
W E
S

PREPARED BY: DIANA WHITNEY

DATE: 29-NOVEMBER-2005

State of Utah

Department of Natural Resources

MICHAEL R. STYLER
Executive Director

Division of Oil, Gas & Mining

JOHN R. BAZA
Division Director

JON M. HUNTSMAN, JR.
Governor

GARY R. HERBERT
Lieutenant Governor

November 29, 2005

Newfield Production Company
Rt. #3, Box 3630
Myton, UT 84052

Re: Federal 8-23-9-16 Well, 1891' FNL, 535' FEL, SE NE, Sec. 23, T. 9 South, R. 16 East, Duchesne County, Utah

Gentlemen:

Pursuant to the provisions and requirements of Utah Code Ann.§ 40-6-1 *et seq.*, Utah Administrative Code R649-3-1 *et seq.*, and the attached Conditions of Approval, approval to drill the referenced well is granted.

This approval shall expire one year from the above date unless substantial and continuous operation is underway, or a request for extension is made prior to the expiration date. The API identification number assigned to this well is 43-013-32961.

Sincerely,

Gil Hunt
Associate Director

pab
Enclosures

cc: Duchesne County Assessor
Bureau of Land Management, Vernal District Office

1594 West North Temple, Suite 1210, PO Box 145801, Salt Lake City, UT 84114-5801
telephone (801) 538-5340 • facsimile (801) 359-3940 • TTY (801) 538-7458 • *www.ogm.utah.gov*

Operator: Newfield Production Company

Well Name & Number Federal 8-23-9-16

API Number: 43-013-32961

Lease: UTU-15855

Location: SE NE **Sec.** 23 **T.** 9 South **R.** 16 East

Conditions of Approval

1. General

   Compliance with the requirements of Utah Admin. R. 649-1 *et seq.*, the Oil and Gas Conservation General Rules, and the applicable terms and provisions of the approved Application for permit to drill.

2. Notification Requirements

   Notify the Division within 24 hours of spudding the well.

   - Contact Carol Daniels at (801) 538-5284.

   Notify the Division prior to commencing operations to plug and abandon the well.

   - Contact Dan Jarvis at (801) 538-5338

3. Reporting Requirements

   All required reports, forms and submittals will be promptly filed with the Division, including but not limited to the Entity Action Form (Form 6), Report of Water Encountered During Drilling (Form 7), Weekly Progress Reports for drilling and completion operations, and Sundry Notices and Reports on Wells requesting approval of change of plans or other operational actions.

4. State approval of this well does not supersede the required federal approval, which must be obtained prior to drilling.

5. This proposed well is located in an area for which drilling units (well spacing patterns) have not been established through an order of the Board of Oil, Gas and Mining (the "Board"). In order to avoid the possibility of waste or injury to correlative rights, the operator is requested, once the well has been drilled, completed, and has produced, to analyze geological and engineering data generated therefrom, as well as any similar data from surrounding areas if available. As soon as is practicable after completion of its analysis, and if the analysis suggests an area larger than the quarter-quarter section upon which the well is located is being drained, the operator is requested to seek an appropriate order from the Board establishing drilling and spacing units in conformance with such analysis by filing a Request for Agency Action with the Board.

RECEIVED

NOV 2 8 2005

BLM VERNAL, UTAH

Form 3160-3
(September 2001)

FORM APPROVED
OMB No. 1004-0136
Expires January 31, 2004

UNITED STATES
DEPARTMENT OF THE INTERIOR
BUREAU OF LAND MANAGEMENT

APPLICATION FOR PERMIT TO DRILL OR REENTER

5. Lease Serial No.
UTU-15855

6. If Indian, Allottee or Tribe Name
N/A

7. If Unit or CA Agreement, Name and No.
N/A

8. Lease Name and Well No.
Federal 8-23-9-16

1a. Type of Work: [x] DRILL [ ] REENTER

1b. Type of Well: [x] Oil Well [ ] Gas Well [ ] Other [x] Single Zone [ ] Multiple Zone

2. Name of Operator
Newfield Production Company

9. API Well No.
43.013.32961

3a. Address
Route #3 Box 3630, Myton UT 84052

3b. Phone No. *(include area code)*
(435) 646-3721

10. Field and Pool, or Exploratory
Monument Butte

4. Location of Well *(Report location clearly and in accordance with any State requirements.*)*
At surface SE/NE 1891' FNL 535' FEL
At proposed prod. zone

11. Sec., T., R., M., or Blk. and Survey or Area
SE/NE Sec. 23, T9S R16E

14. Distance in miles and direction from nearest town or post office*
Approximatley 17.9 miles southwest of Myton, Utah

12. County or Parish
Duchesne

13. State
UT

15. Distance from proposed* location to nearest property or lease line, ft. (Also to nearest drig. unit line, if any) Approx. 1891' f/lse, NA' f/unit

16. No. of Acres in lease
1200.00

17. Spacing Unit dedicated to this well
40 Acres

18. Distance from proposed location* to nearest well, drilling, completed, applied for, on this lease, ft. Approx. 1526'

19. Proposed Depth
5810'

20. BLM/BIA Bond No. on file
UT0056

21. Elevations (Show whether DF, KDB, RT, GL, etc.)
5685' GL

22. Approximate date work will start*
1st Quarter 2006

23. Estimated duration
Approximately seven (7) days from spud to rig release.

24. Attachments

The following, completed in accordance with the requirements of Onshore Oil and Gas Order No.1, shall be attached to this form:

1. Well plat certified by a registered surveyor.
2. A Drilling Plan.
3. A Surface Use Plan (if the location is on National Forest System Lands, the SUPO shall be filed with the appropriate Forest Service Office).
4. Bond to cover the operations unless covered by an existing bond on file (see Item 20 above).
5. Operator certification.
6. Such other site specific information and/or plans as may be required by the authorized officer.

25. Signature Mandie Crozier
Name *(Printed/Typed)* Mandie Crozier
Date 11/22/05

Title Regulatory Specialist

Approved by *(Signature)* Jerry Kenczka
Name *(Printed/Typed)* JERRY KENCZKA
Date 9-8-2006

Title Assistant Field Manager Lands & Mineral Resources
Office

Application approval does not warrant or certify the the applicant holds legal or equitable title to those rights in the subject lease which would entitle the applicant to conduct operations thereon.
Conditions of approval, if any, are attached.

Title 18 U.S.C. Section 1001 and Title 43 U.S.C. Section 1212, make it a crime for any person knowingly and willfully to make to any department or agency of the United States any false, fictitious or fraudulent statements or representations as to any matter within its jurisdiction.

**(Instructions on reverse)*

CONDITIONS OF APPROVAL ATTACHED

NOTICE OF APPROVAL

RECEIVED

SEP 1 5 2006

DIV. OF OIL, GAS & MINING

UNITED STATES DEPARTMENT OF THE INTERIOR
BUREAU OF LAND MANAGEMENT
VERNAL FIELD OFFICE
170 South 500 East VERNAL, UT 84078 (435) 781-4400

CONDITIONS OF APPROVAL FOR APPLICATION FOR PERMIT TO DRILL

Company:	**Newfield Production Company**	**Location:**	**SENE, Sec 23, T9S, R16E**
Well No:	**Federal 8-23-9-16**	**Lease No:**	**UTU-15855**
API No:	**43-013- 32961**	**Agreement:**	**N/A**

Petroleum Engineer:	Matt Baker	Office: 435-781-4490	Cell: 435-828-4470
Petroleum Engineer:	Michael Lee	Office: 435-781-4432	Cell: 435-828-7875
Supervisory Petroleum Technician:	Jamie Sparger	Office: 435-781-4502	Cell: 435-828-3913
Environmental Scientist:	Paul Buhler	Office: 435-781-4475	Cell: 435-828-4029
Environmental Scientist:	Karl Wright	Office: 435-781-4484	
Natural Resource Specialist:	Holly Villa	Office: 435-781-4404	
Natural Resource Specialist:	Melissa Hawk	Office: 435-781-4476	
Natural Resource Specialist:	Chris Carusona	Office: 435-781-4441	
Natural Resource Specialist:	Scott Ackerman	Office: 435-781-4437	
After Hours Contact Number: 435-781-4513		Fax: 435-781-4410	

A COPY OF THESE CONDITIONS SHALL BE FURNISHED TO YOUR FIELD REPRESENTATIVE TO INSURE COMPLIANCE

All lease and/or unit operations are to be conducted in such a manner that full compliance is made with the applicable laws, regulations (43 CFR Part 3160), and this approved Application for Permit to Drill including Surface and Downhole Conditions of Approval. The operator is considered fully responsible for the actions of his subcontractors. A copy of the approved APD must be on location during construction, drilling, and completion operations. **This permit is approved for a one-year period. An additional year extension may be applied for by sundry notice prior to expiration.**

NOTIFICATION REQUIREMENTS

Location Construction (Notify Chris Carusona)	-	Forty-Eight (48) hours prior to construction of location and access roads.
Location Completion (Notify Chris Carusona)	-	Prior to moving on the drilling rig.
Spud Notice (Notify Petroleum Engineer)	-	Twenty-Four (24) hours prior to spudding the well.
Casing String & Cementing (Notify Jamie Sparger)	-	Twenty-Four (24) hours prior to running casing and cementing all casing strings
BOP & Related Equipment Tests (Notify Jamie Sparger)	-	Twenty-Four (24) hours prior to initiating pressure tests
First Production Notice (Notify Petroleum Engineer)	-	Within Five (5) business days after new well begins or production resumes after well has been off production for more than ninety (90) days

SURFACE USE PROGRAM CONDITIONS OF APPROVAL (COAs)

- This well is being approved in accordance with Washington Instruction Memorandum 2005-247 and Section 390 (Category 3) of the Energy Policy Act which establishes statutory categorical exclusions (CX) under the National Environmental Policy Act (NEPA). Category 3 states that an oil or gas well can be drilled within a developed field for which an approved land use plan or any environmental document prepared pursuant to NEPA analyzed drilling as a reasonably foreseeable activity, so long as such plan or document was approved within five (5) years prior to the date of spudding the well. This well is covered under the Final Environmental Impact Statement and Record of Decision Castle Peak and Eightmile Flat Oil and Gas Exploration Project Newfield Rocky Mountains Inc., signed November 21, 2005. If the well has not been spudded by November 21, 2010, a new environmental document will have to be prepared prior to the approval of the APD.

- All applicable local, state, and/or federal laws, regulations, and/or statutes must be complied with.

- Construction related traffic shall be restricted to approved routes. Cross-country vehicle travel will not be allowed.

- No drilling or surface disturbing activities are allowed 600' or less from live water.

- If additional erosion occurs during the life of this project, more culverts, low water crossings, berms, wing ditches or etc. will be needed to control the erosion.

- The reserve pit will be lined with a 16 ml or greater liner prior to spudding.

- No vehicle travel, construction or routine maintenance activities shall be performed during periods when the soil is too wet to adequately support vehicles and/or construction equipment. If such equipment creates ruts in excess of four inches deep, the soil shall be deemed too wet to adequately support construction equipment.

- The liner is to be cut 5 feet below ground or at the level of the cuttings, whichever is deeper and the excess liner material is to be disposed of at an authorized disposal site.

- When the reserve pit contains fluids or toxic substances, the operator must ensure that animals do not ingest or become entrapped in pit fluids.

- The well pad and access/pipeline require monitoring by a qualified Paleontologist prior to and during any surface disturbing activities.

- Prevent fill and stock piles from entering drainages.
- CULTURAL AND PALEONTOLOGICAL RESOURCES Any cultural and/or paleontological resource (historic or prehistoric site or object or fossil) discovered by the holder, or any person working on his behalf, on public or Federal land shall be immediately reported to the authorized officer. Holder shall suspend all operations in the immediate area of such discovery until written authorization to proceed is issued by the authorized officer. An evaluation of the discovery will be made by the authorized officer to determine appropriate actions to prevent the loss of

significant cultural or scientific values. The holder will be responsible for the cost of evaluation and a decision as to proper mitigation measures shall be made by the authorized officer after consulting with the holder.

- The access road will be crowned and ditched. Flat-bladed roads are NOT allowed.
- Notify the Authorized Officer 48 hours prior to surface disturbing activities.
- All well facilities not regulated by OSHA will be painted Carlsbad Canyon.
- The boulders >3' found at the surface or above ground will be saved for final reclamation.
- Interim Reclamation (see below):
- Where possible, strip six inches of topsoil from the location as shown on the cut sheet. After the well is converted to an injection well, the topsoil will be spread and re-contoured on the location and immediately seeded with the seed mix below.

Interim Reclamation Seed Mix for location:

Galleta grass	*Hilaria jamesii*	6 lbs/acre
Western wheatgrass	*Pascopyrum smithii*	6 lbs/acre
	Per Live Seed Total	12 lbs/acre

- The topsoil from the reserve pit should be stripped and piled separately near the reserve pit. When the reserve pit is closed it should be re-contoured, then the area should be seeded in the same manner as the topsoil.
- There shall be no primary or secondary noxious weeds in the seed mixture.
- Once the location is plugged and abandoned contact the Authorized Officer for final reclamation plans.
- The above listed seed mix shall be used to seed all unused portions of the pad including the topsoil and stock piles, and the reserve pits. Re-seeding may be required if the first seeding is not successful.
- The seed shall be drilled or disked into the ground or hand broadcast onto the ground. Planting depth shall not exceed one-half inch using a seed drill. If the seed is hand broadcast then the seed mixture will be doubled and the area raked or chained to cover the seed.

DOWNHOLE CONDITIONS OF APPROVAL

All provisions outlined in Onshore Oil & Gas Order #2 Drilling Operations shall be strictly adhered to. The following items are emphasized:

SITE SPECIFIC DOWNHOLE CONDITIONS OF APPROVAL

- None

DRILLING/COMPLETION/PRODUCING OPERATING STANDARDS

- There shall be no deviation from the proposed drilling, completion, and/or workover program as approved. Safe drilling and operating practices must be observed. All wells, whether drilling, producing, suspended, or abandoned, shall be identified in accordance with 43 CFR 3162.6. There shall be a sign or marker with the name of the operator, lease serial number, well number, and surveyed description of the well. Any changes in operation must have prior approval from the BLM, Vernal Field Office Petroleum Engineers.

- The spud date and time shall be reported orally to Vernal Field Office within 24 hours of spudding.

- **Notify Vernal Field Office Supervisory Petroleum Engineering Technician at least 24 hours in advance of casing cementing operations and BOPE & casing pressure tests.**

- Blowout prevention equipment (BOPE) shall remain in use until the well is completed or abandoned. Closing unit controls shall remain unobstructed and readily accessible at all times. Choke manifolds shall be located outside of the rig substructure.

- All BOPE components shall be inspected daily and those inspections shall be recorded in the daily drilling report. Components shall be operated and tested as required by Onshore Oil & Gas Order No. 2 to insure good mechanical working order. All BOPE pressure tests shall be performed by a test pump with a chart recorder and **NOT** by the rig pumps. Test shall be reported in the driller's log.

- BOP drills shall be initially conducted by each drilling crew within 24 hours of drilling out from under the surface casing and weekly thereafter as specified in Onshore Oil & Gas Order No. 2.

- Casing pressure tests are required before drilling out from under all casing strings set and cemented in place.

- No aggressive/fresh hard-banded drill pipe shall be used within casing.

- All shows of fresh water and minerals shall be reported and protected. A sample shall be taken of any water flows and a water analysis furnished the BLM, Vernal Field Office. All oil and gas shows shall be adequately tested for commercial possibilities, reported, and protected.

- No location shall be constructed or moved, no well shall be plugged, and no drilling or workover equipment shall be removed from a well to be placed in a suspended status without prior approval of the BLM, Vernal Field Office. If operations are to be suspended for more than 30 days, prior approval of the BLM, Vernal Field Office shall be obtained and notification given before resumption of operations.

- Chronologic drilling progress reports shall be filed directly with the BLM, Vernal Field Office on a

weekly basis in sundry, letter format or e-mail to the Petroleum Engineers until the well is completed.

- Any change in the program shall be approved by the BLM, Vernal Field Office. "Sundry Notices and Reports on Wells" (Form BLM 3160-5) shall be filed for all changes of plans and other operations in accordance with 43 CFR 3162.3-2.

- Emergency approval may be obtained orally, but such approval does not waive the written report requirement. Any additional construction, reconstruction, or alterations of facilities, including roads, gathering lines, batteries, etc., which will result in the disturbance of new ground, shall require the filing of a suitable plan pursuant to Onshore Oil & Gas Order No. 1 of 43 CFR 3164.1 and prior approval by the BLM, Vernal Field Office.

- In accordance with 43 CFR 3162.4-3, this well shall be reported on the "Monthly Report of Operations" (Oil and Gas Operations Report ((OGOR)) starting with the month in which operations commence and continue each month until the well is physically plugged and abandoned. This report shall be filed in duplicate, directly with the Minerals Management Service, P.O. Box 17110, Denver, Colorado 80217-0110, or call 1-800-525-7922 (303) 231-3650 for reporting information.

- Whether the well is completed as a dry hole or as a producer, "Well Completion and Recompletion Report and Log" (BLM Form 3160-4) shall be submitted not later than 30 days after completion of the well or after completion of operations being performed, in accordance with 43 CFR 3162.4-1. Two copies of all logs run, core descriptions, and all other surveys or data obtained and compiled during the drilling, workover, and/or completion operations, shall be filed on BLM Form 3160-4. Submit with the well completion report a geologic report including, at a minimum, formation tops, and a summary and conclusions. Also include deviation surveys, sample descriptions, strip logs, core data, drill stem test data, and results of production tests if performed. Samples (cuttings, fluid, and/or gas) shall be submitted only when requested by the BLM, Vernal Field Office.

- A cement bond log (CBL) will be run from the production casing shoe to the surface casing shoe and shall be utilized to determine the bond quality for the production casing. Submit a field copy of the CBL to this office.

- **Please submit an electronic copy of all other logs run on this well in LAS format to UT_VN_Welllogs@BLM.gov. This submission will supersede the requirement for submittal of paper logs to the BLM.**

- All off-lease storage, off-lease measurement, or commingling on-lease or off-lease shall have prior written approval from the BLM, Vernal Field Office.

- All measurement points shall be identified as point of sales or allocation for royalty determination prior to the installation of facilities.

- Oil and gas meters shall be calibrated in place prior to any deliveries. The Field Office Petroleum Engineers will be provided with a date and time for the initial meter calibration and all future meter proving schedules. A copy of the meter calibration reports shall be submitted to the BLM, Vernal Field Office. All measurement facilities will conform to the API standards for liquid hydrocarbons and the AGA standards for natural gas measurement.

- A schematic facilities diagram as required by Onshore Oil & Gas Order No. 3 shall be submitted to the BLM, Vernal Field Office within 30 days of installation or first production, whichever occurs first. All site security regulations as specified in Onshore Oil & Gas Order No. 3 shall be adhered to. All product lines entering and leaving hydrocarbon storage tanks will be effectively sealed in accordance with Onshore Oil & Gas Order No. 3.

- This APD is approved subject to the requirement that, should the well be successfully completed for production, the BLM, Vernal Field office must be notified when it is placed in a producing status. Such notification will be by written communication and must be received in this office by not later than the fifth business day following the date on which the well is placed on production. The notification shall provide, as a minimum, the following informational items:

  - Operator name, address, and telephone number.
  - Well name and number.
  - Well location (¼¼, Sec., Twn, Rng, and P.M.).
  - Date well was placed in a producing status (date of first production for which royalty will be paid).
  - The nature of the well's production, (i.e., crude oil, or crude oil and casing head gas, or natural gas and entrained liquid hydrocarbons).
  - The Federal or Indian lease prefix and number on which the well is located; otherwise the non-Federal or non-Indian land category, i.e., State or private.
  - Unit agreement and / or participating area name and number, if applicable.
  - Communitization agreement number, if applicable.

- Any venting or flaring of gas shall be done in accordance with Notice to Lessees (NTL) 4A and needs prior approval from Field Office Petroleum Engineers.

- All undesirable events (fires, accidents, blowouts, spills, discharges) as specified in NTL 3A will be reported to the BLM, Vernal Field Office. Major events as defined in NTL3A, shall be reported verbally within 24 hours, followed by a written report within 15 days. "Other than Major Events" will be reported in writing within 15 days. "Minor Events" will be reported on the Monthly Report of Operations and Production

- Pursuant to Onshore Oil & Gas Order No. 7, this is authorization for pit disposal of water produced from this well for a period of 90 days from the date of initial production. A permanent disposal method must be approved by this office and in operation prior to the end of this 90-day period. In order to meet this deadline, an application for the proposed permanent disposal method shall be submitted along with any necessary water analyses, as soon as possible, but no later than 45 days after the date of first production. Any method of disposal which has not been approved prior to the end of the authorized 90-day period will be considered as an Incident of Noncompliance and will be grounds for issuing a shut-in order until an acceptable manner for disposing of said water is provided and approved by this office.

- Unless the plugging is to take place immediately upon receipt of oral approval, the Field Office Petroleum Engineers must be notified at least 24 hours in advance of the plugging of the well, in order that a representative may witness plugging operations. If a well is suspended or abandoned, all pits must be fenced immediately until they are backfilled. The "Subsequent Report of Abandonment" (Form BLM 3160-5) must be submitted within 30 days after the actual plugging of the well bore, showing location of plugs, amount of cement in each, and amount of casing left in hole, and the current status of the surface restoration.

FORM 3160-5
(June 1990)

UNITED STATES
DEPARTMENT OF THE INTERIOR
BUREAU OF LAND MANAGEMENT

FORM APPROVED
Budget Bureau No. 1004-0135
Expires: March 31, 1993

SUNDRY NOTICES AND REPORTS ON WELLS

Do not use this form for proposals to drill or to deepen or reentry a different reservoir.
Use "APPLICATION FOR PERMIT -" for such proposals

SUBMIT IN TRIPLICATE

5. Lease Designation and Serial No.
UTU-15855

6. If Indian, Allottee or Tribe Name
NA

7. If Unit or CA, Agreement Designation
N/A

1. Type of Well
[X] Oil Well [ ] Gas Well [ ] Other

8. Well Name and No.
FEDERAL 8-23-9-16

9. API Well No.
43-013-32961

2. Name of Operator
NEWFIELD PRODUCTION COMPANY

10. Field and Pool, or Exploratory Area
MONUMENT BUTTE

3. Address and Telephone No.
Rt. 3 Box 3630, Myton Utah, 84052 435-646-3721

11. County or Parish, State
DUCHESNE COUNTY, UT.

4. Location of Well (Footage, Sec., T., R., m., or Survey Description)
1891 FNL 535 FEL SE/NE Section 23, T9S R16E

12. **CHECK APPROPRIATE BOX(s) TO INDICATE NATURE OF NOTICE, REPORT, OR OTHER DATA**

TYPE OF SUBMISSION	TYPE OF ACTION	
[X] Notice of Intent	[ ] Abandonment	[ ] Change of Plans
[ ] Subsequent Report	[ ] Recompletion	[ ] New Construction
[ ] Final Abandonment Notice	[ ] Plugging Back	[ ] Non-Routine Fracturing
	[ ] Casing Repair	[ ] Water Shut-Off
	[ ] Altering Casing	[ ] Conversion to Injection
	[X] Other **Permit Extension**	[ ] Dispose Water
		(Note: Report results of multiple completion on Well Completion or Recompletion Report and Log form.)

13. Describe Proposed or Completed Operations (Clearly state all pertinent details, and give pertinent dates, including estimated date of starting any proposed work. If well is directionally drilled, give subsurface locations and measured and true vertical depths for all markers and zones pertinent to this work.)*

Newfield Production Company requests to extend the Permit to Drill this well for one year. The original approval date was 11/29/05 (expiration 11/29/06).

This APD is not yet due to expire with the BLM.

Approved by the
Utah Division of
Oil, Gas and Mining

Date: 10-30-06
By: [signature]

10-31-06
km

14. I hereby certify that the foregoing is true and correct
Signed [signature] Mandie Crozier Title Regulatory Specialist Date 10-27-2006

CC: UTAH DOGM

RECEIVED
OCT 30 2006
DIV. OF OIL, GAS & MINING

(This space for Federal or State office use)
Approved by _____ Title _____ Date _____

RESET

Application for Permit to Drill
Request for Permit Extension
Validation
(this form should accompany the Sundry Notice requesting permit extension)

API: 43-013-32961
Well Name: Federal 8-23-9-16
Location: SE/NE Section 23, T9S R16E
Company Permit Issued to: Newfield Production Company
Date Original Permit Issued: 11/29/2005

The undersigned as owner with legal rights to drill on the property as permitted above, hereby verifies that the information as submitted in the previously approved application to drill, remains valid and does not require revision.

Following is a checklist of some items related to the application, which should be verified.

If located on private land, has the ownership changed, if so, has the surface agreement been updated? Yes☐No☐ NA

Have any wells been drilled in the vicinity of the proposed well which would affect the spacing or siting requirements for this location? Yes☐No☑

Has there been any unit or other agreements put in place that could affect the permitting or operation of this proposed well? Yes☐No☑

Have there been any changes to the access route including ownership, or right-of-way, which could affect the proposed location? Yes☐No☑

Has the approved source of water for drilling changed? Yes☐No☑

Have there been any physical changes to the surface location or access route which will require a change in plans from what was discussed at the onsite evaluation? Yes☐No☑

Is bonding still in place, which covers this proposed well? Yes☑No☐

Mandie Crozier
Signature

10/27/2006
Date

Title: Regulatory Specialist

Representing: Newfield Production Company

RECEIVED
OCT 30 2006
DIV. OF OIL, GAS & MINING

FORM 3160-5
(June 1990)

UNITED STATES
DEPARTMENT OF THE INTERIOR
BUREAU OF LAND MANAGEMENT

RECEIVED
VERNAL FIELD OFFICE
2007 SEP 11 PM 1:22
DEPT. OF THE INTERIOR
BUREAU OF LAND MGMT.

FORM APPROVED
Budget Bureau No. 1004-0135
Expires: March 31, 1993

SUNDRY NOTICES AND REPORTS ON WELLS

Do not use this form for proposals to drill or to deepen or reentry a different reservoir.
Use "APPLICATION FOR PERMIT -" for such proposals

5. Lease Designation and Serial No.
UTU-15855

6. If Indian, Allottee or Tribe Name
NA

7. If Unit or CA, Agreement Designation
N/A

SUBMIT IN TRIPLICATE

1. Type of Well
[X] Oil Well [ ] Gas Well [ ] Other

8. Well Name and No.
FEDERAL 8-23-9-16

9. API Well No.
43-013-32961

2. Name of Operator
NEWFIELD PRODUCTION COMPANY

10. Field and Pool, or Exploratory Area
MONUMENT BUTTE

3. Address and Telephone No.
Rt. 3 Box 3630, Myton Utah, 84052 435-646-3721

11. County or Parish, State
DUCHESNE COUNTY, UT.

4. Location of Well (Footage, Sec., T., R., m., or Survey Description)
1891 FNL 535 FEL SE/NE Section 23, T9S R16E

12. CHECK APPROPRIATE BOX(s) TO INDICATE NATURE OF NOTICE, REPORT, OR OTHER DATA

TYPE OF SUBMISSION	TYPE OF ACTION	
[X] Notice of Intent	[ ] Abandonment	[ ] Change of Plans
[ ] Subsequent Report	[ ] Recompletion	[ ] New Construction
[ ] Final Abandonment Notice	[ ] Plugging Back	[ ] Non-Routine Fracturing
	[ ] Casing Repair	[ ] Water Shut-Off
	[ ] Altering Casing	[ ] Conversion to Injection
	[X] Other Permit Extension	[ ] Dispose Water
		(Note: Report results of multiple completion on Well Completion or Recompletion Report and Log form.)

13. Describe Proposed or Completed Operations (Clearly state all pertinent details, and give pertinent dates, including estimated date of starting any proposed work. If well is directionally drilled, give subsurface locations and measured and true vertical depths for all markers and zones pertinent to this work.)*

Newfield Production Company requests to extend the Permit to Drill this well for one year. The original approval date was 9/8/06 (expiration9/8/07).

CONDITIONS OF APPROVAL ATTACHED

14. I hereby certify that the foregoing is true and correct
Signed Mandie Crozier Title Regulatory Specialist Date 9/7/2007

CC: UTAH DOGM

(This space for Federal or State office use)
Approved by Matt Baker Title Petroleum Engineer Date SEP 14 2007

Conditions of approval, if any:

CC: Utah DOGM

RECEIVED
OCT 09 2007
DIV. OF OIL, GAS & MINING

Title 18 U.S.C. Section 1001, makes it a crime for any person knowingly and willfully to make to any department or agency of the United States any false, fictitious or fraudulent statements or representations as to any matter within its jurisdiction.

UDOGM

CONDITIONS OF APPROVAL

Newfield Production Co.

Notice of Intent
APD Extension

Lease: UTU-15855
Well: Fed 8-23-9-16
Location: SENE Sec23-T9S-R16E

An extension for the referenced APD is granted with the following conditions:

---

1. The extension and APD shall expire on 09/08/08

2. No other extension shall be granted.

If you have any other questions concerning this matter, please contact Matt Baker of this office at (435) 781-4490

FORM 3160-5
(June 1990)

UNITED STATES
DEPARTMENT OF THE INTERIOR
BUREAU OF LAND MANAGEMENT

FORM APPROVED
Budget Bureau No. 1004-0135
Expires: March 31, 1993

SUNDRY NOTICES AND REPORTS ON WELLS

Do not use this form for proposals to drill or to deepen or reentry a different reservoir.
Use "APPLICATION FOR PERMIT -" for such proposals

SUBMIT IN TRIPLICATE

5. Lease Designation and Serial No.
UTU-15855

6. If Indian, Allottee or Tribe Name
NA

7. If Unit or CA, Agreement Designation
N/A

1. Type of Well
[X] Oil Well [ ] Gas Well [ ] Other

8. Well Name and No.
FEDERAL 8-23-9-16

9. API Well No.
43-013-32961

2. Name of Operator
NEWFIELD PRODUCTION COMPANY

10. Field and Pool, or Exploratory Area
MONUMENT BUTTE

3. Address and Telephone No.
Rt. 3 Box 3630, Myton Utah, 84052 435-646-3721

11. County or Parish, State
DUCHESNE COUNTY, UT.

4. Location of Well (Footage, Sec., T., R., m., or Survey Description)
1891 FNL 535 FEL SE/NE Section 23, T9S R16E

12. **CHECK APPROPRIATE BOX(s) TO INDICATE NATURE OF NOTICE, REPORT, OR OTHER DATA**

TYPE OF SUBMISSION	TYPE OF ACTION	
[X] Notice of Intent	[ ] Abandonment	[ ] Change of Plans
[ ] Subsequent Report	[ ] Recompletion	[ ] New Construction
[ ] Final Abandonment Notice	[ ] Plugging Back	[ ] Non-Routine Fracturing
	[ ] Casing Repair	[ ] Water Shut-Off
	[ ] Altering Casing	[ ] Conversion to Injection
	[X] Other **Permit Extension**	[ ] Dispose Water

(Note: Report results of multiple completion on Well Completion or Recompletion Report and Log form.)

13. Describe Proposed or Completed Operations (Clearly state all pertinent details, and give pertinent dates, including estimated date of starting any proposed work. If well is directionally drilled, give subsurface locations and measured and true vertical depths for all markers and zones pertinent to this work.)*

Newfield Production Company requests to extend the Permit to Drill this well for one year. The original approval date was 11/29/05 (expiration 11/29/07).

This APD is not yet due to expire with the BLM.

Approved by the Utah Division of Oil, Gas and Mining

Date: 11-27-07

By: [signature]

COPY SENT TO OPERATOR
Date: 11/28/2007
Initials: KS

RECEIVED
NOV 21 2007
DIV. OF OIL, GAS & MINING

14. I hereby certify that the foregoing is true and correct

Signed [signature] Title Regulatory Specialist Date 11/20/2007
Mandie Crozier

CC: UTAH DOGM

(This space for Federal or State office use)

Approved by _____ Title _____ Date _____

Conditions of approval, if any:

CC: Utah DOGM

Title 18 U.S.C. Section 1001, makes it a crime for any person knowingly and willfully to make to any department or agency of the United States any false, fictitious or fradulent statements or representations as to any matter within its jurisdiction.

[redacted]

Application for Permit to Drill
Request for Permit Extension
Validation
(this form should accompany the Sundry Notice requesting permit extension)

API: 43-013-32961
Well Name: Federal 8-23-9-16
Location: SE/NE Section 23,T9S R16E
Company Permit Issued to: Newfield Production Company
Date Original Permit Issued: 11/29/2005

The undersigned as owner with legal rights to drill on the property as permitted above, hereby verifies that the information as submitted in the previously approved application to drill, remains valid and does not require revision.

Following is a checklist of some items related to the application, which should be verified.

If located on private land, has the ownership changed, if so, has the surface agreement been updated? Yes ☑ No ☐

Have any wells been drilled in the vicinity of the proposed well which would affect the spacing or siting requirements for this location? Yes ☐ No ☑

Has there been any unit or other agreements put in place that could affect the permitting or operation of this proposed well? Yes ☐ No ☑

Have there been any changes to the access route including ownership, or right-of-way, which could affect the proposed location? Yes ☐ No ☑

Has the approved source of water for drilling changed? Yes ☐ No ☑

Have there been any physical changes to the surface location or access route which will require a change in plans from what was discussed at the onsite evaluation? Yes ☐ No ☑

Is bonding still in place, which covers this proposed well? Yes ☑ No ☐

Mandie Crozier
Signature

11/20/2007
Date

Title: Regulatory Specialist

Representing: Newfield Production Company

RECEIVED
NOV 21 2007
DIV. OF OIL, GAS & MINING

DIVISION OF OIL, GAS AND MINING

SPUDDING INFORMATION

Name of Company: **Newfield Production Company**

Well Name: **Federal 8-23-9-16**

API No: **43-013-32961** Lease Type: **Federal**

Section **23** Township **09S** Range **16 E** County **Duchesne**

Drilling Contractor **NDSI #1** Rig # **NS#1**

SPUDDED:

Date **12-13-07**

Time **1:00 PM**

How **Dry**

Drilling will Commence:

Reported by **Don Bastian**

Telephone # **435-823-6012**

Date 12-17-07 **Signed RM**

STATE OF UTAH
DIVISION OF OIL, GAS AND MINING
ENTITY ACTION FORM -FORM 6

OPERATOR: NEWFIELD PRODUCTION COMPANY
ADDRESS: RT. 3 BOX 3630
MYTON, UT 84052

OPERATOR ACCT. NO. N2695

ACTION CODE	CURRENT ENTITY NO.	NEW ENTITY NO.	API NUMBER	WELL NAME	WELL LOCATION QQ	SC	TP	RG	COUNTY	SPUD DATE	EFFECTIVE DATE
A	99999	16568	4310333002	FEDERAL 1-23-9-16	NENE	23	9S	16E	DUCHESNE	12/13/2007	12/31/07

WELL 1 COMMENTS: GRRV

ACTION CODE	CURRENT ENTITY NO.	NEW ENTITY NO.	API NUMBER	WELL NAME	WELL LOCATION QQ	SC	TP	RG	COUNTY	SPUD DATE	EFFECTIVE DATE
A	99999	16570	4301333004	FEDERAL 4-24-9-16	NWNW	24	9S	16E	DUCHESNE	12/12/2007	12/31/07

GRRV

ACTION CODE	CURRENT ENTITY NO.	NEW ENTITY NO.	API NUMBER	WELL NAME	WELL LOCATION QQ	SC	TP	RG	COUNTY	SPUD DATE	EFFECTIVE
A	99999	16567	4301332961 ~~4301332961~~	FEDERAL 8-23-9-16	SENE	23	9S	16E	DUCHESNE	12/13/2007	12/31/07

GRRV

ACTION CODE	CURRENT ENTITY NO.	NEW ENTITY NO.	API NUMBER	WELL NAME	WELL LOCATION QQ	SC	TP	RG	COUNTY	SPUD DATE	EFFECTIVE DATE
B	99999	12276	4301333520 ~~430133520~~	Wells Draw FEDERAL H-5-9-16	NENW	5	9S	16E	DUCHESNE	12/14/2007	12/31/07

GRRV

ACTION CODE	CURRENT ENTITY NO.	NEW ENTITY NO.	API NUMBER	WELL NAME	WELL LOCATION QQ	SC	TP	RG	COUNTY	SPUD DATE	EFFECTIVE DATE
B	99999	12417	4301333309	LONE TREE FEDERAL 12-22-9-17	NWSW	22	9S	17E	DUCHESNE	12/17/2007	12/31/07

WELL 5 COMMENTS: GRRV

ACTION CODE	CURRENT ENTITY NO.	NEW ENTITY NO.	API NUMBER	WELL NAME	WELL LOCATION QQ	SC	TP	RG	COUNTY	SPUD DATE	EFFECTIVE DATE

WELL 6 COMMENTS:

ACTION CODES (See instructions on back of form)
- A - new entity for new well (single well only)
- B - well to existing entity (group or unit well)
- C - from one existing entity to another existing entity
- D - well from one existing entity to a new entity
- E - other (explain in comments section)

NOTE: Use COMMENT section to explain why each Action Code was selected.

Tammi Lee
Signature

Tammi Lee

Production Clerk

12/18/07
Date

RECEIVED
DEC 20 2007
DIV OF OIL, GAS & MINING

FORM 3160-5
(September 2001)

UNITED STATES
DEPARTMENT OF THE INTERIOR
BUREAU OF LAND MANAGEMENT

FORM APPROVED
OMB No. 1004-0135
Expires January 31,2004

SUNDRY NOTICES AND REPORTS ON WELLS

Do not use this form for proposals to drill or to re-enter an abandoned well. Use Form 3160-3 (APD) for such proposals.

SUBMIT IN TRIPLICATE - Other Instructions on reverse side

5. Lease Serial No.
USA UTU-15855

6. If Indian, Allottee or Tribe Name.

7. If Unit or CA/Agreement, Name and/or

1. Type of Well
☒ Oil Well ☐ Gas Well ☐ Other

8. Well Name and No.
Federal 8-23-9-16

2. Name of Operator
NEWFIELD PRODUCTION COMPANY

9. API Well No.
4301332961

3a. Address Route 3 Box 3630
Myton, UT 84052

3b. Phone *(include are code)*
435.646.3721

10. Field and Pool, or Exploratory Area
MONUMENT BUTTE

4. Location of Well *(Footage, Sec., T., R., M., or Survey Description)*
189 FNL 535 FEL

SENE Section 23 T9S R16E

11. County or Parish, State
DUCHESNE, UT

12. CHECK APPROPRIATE BOX(ES) TO INIDICATE NATURE OF NOTICE, OR OTHER DATA

TYPE OF SUBMISSION	TYPE OF ACTION			
☐ Notice of Intent	☐ Acidize	☐ Deepen	☐ Production(Start/Resume)	☐ Water Shut-Off
☒ Subsequent Report	☐ Alter Casing	☐ Fracture Treat	☐ Reclamation	☐ Well Integrity
☐ Final Abandonment	☐ Casing Repair	☐ New Construction	☐ Recomplete	☒ Other Spud Notice
	☐ Change Plans	☐ Plug & Abandon	☐ Temporarily Abandon	
	☐ Convert to	☐ Plug Back	☐ Water Disposal	

13. Describe Proposed or Completed Operation (clearly state all pertinent details, including estimated starting date of any proposed work and approximate duration thereof. If the proposal is to deepen directionally or recomplete horizontally, give subsurface locations and measured and true vertical depths of all pertinent markers and zones. Attach the Bond under which the work will be performed or provide the Bond No. on file with BLM/BIA. Required subsequent reports shall be filed within 30 days following completion of the involved operations. If the operation results in a multiple completion or recompletion in a new interval, a Form 3160-4 shall be filed once testing has been completed. Final Abandonment Notices shall be filed only after all requirements, including reclamation, have been completed, and the operator has determined that the site is ready for final inspection.)

On 12-13-07 MIRU NDSI spud rig #1. Drill 310' of 12 1/4" hole with air mist. TIH W/7 Jt's 8 5/8" J-55 24# csgn. Set @ 314.22'KB. On 12-19-07 Cement with 160 sks of Class "G" w/ 2% CaCL+ 1/4# Cello Flake. Mixed @ 15.8 ppg> 1.17 cf/sk yeild. Returned 4 bbls cement to pit.

I hereby certify that the foregoing is true and correct *(Printed/ Typed)*
Ray Herrera

Title
Drilling Foreman

Signature

Date
12/21/2007

THIS SPACE FOR FEDERAL OR STATE OFFICE USE

Approved by

Title

Date

Conditions of approval, if any, are attached. Approval of this notice does not warrant or certify that the applicant holds legal or equitable title to those rights in the subject lease which would entitle the applicant to conduct operations thereon.

Office

Title 18 U.S.C. Section 1001 and Title 43 U.S.C. Section 1212, make it a crime for any person knowingly and willfully to make to any department or agency of the United States any false, fictitious and fraudulent statements or representations as to any matter within its jurisdiction

(Instructions on reverse)

RECEIVED
JAN 09 2008
DIV. OF OIL, GAS & MINING

NEWFIELD PRODUCTION COMPANY - CASING & CEMENT REPORT

8 5/8 CASING SET AT 314.22

LAST CASING 8 5/8" SET AT 314.22
DATUM 12' KB
DATUM TO CUT OFF CASING
DATUM TO BRADENHEAD FLANGE
TD DRILLER 310' LOGGER
HOLE SIZE 12 1/4

OPERATOR NewField Production Company
WELL Federal 8-23-9-16
FIELD/PROSPECT Monument Butte
CONTRACTOR & RIG # NDSI NS #1

LOG OF CASING STRING:

PIECES	OD	ITEM - MAKE - DESCRIPTION	WT / FT	GRD	THREAD	CONDT	LENGTH
		Shoe Joint 35.54'					
		WHI - 92 csg head			8rd	A	0.95
7	8 5/8"	Maverick ST&C csg	24#	J-55	8rd	A	302.37
		GUIDE shoe			8rd	A	0.9

CASING INVENTORY BAL.	FEET	JTS
TOTAL LENGTH OF STRING	304.22	7
LESS NON CSG. ITEMS	1.85	
PLUS FULL JTS. LEFT OUT	0	
TOTAL	302.37	7
TOTAL CSG. DEL. (W/O THRDS)	303.8	7
TIMING	1ST STAGE	
BEGIN RUN CSG. Spud	12/13/2007	1:00PM
CSG. IN HOLE	12/14/2007	11:30 AM
BEGIN CIRC	12/19/2007	3;43 pm
BEGIN PUMP CMT	12/19/2007	3:57 PM
BEGIN DSPL. CMT	12/19/2007	4:15 PM
PLUG DOWN	12/19/2007	4:24 PM

TOTAL LENGTH OF STRING	304.22
LESS CUT OFF PIECE	2
PLUS DATUM TO T/CUT OFF CSG	12
CASING SET DEPTH	314.22

} COMPARE

GOOD CIRC THRU JOB yes
Bbls CMT CIRC TO SURFACE 4 BBLS
RECIPROCATED PIPE FOR ____ THRU ____ FT STROKE
N/A
BUMPED PLUG TO 130 PSI

CEMENT USED		7 CEMENT COMPANY- B. J.
STAGE	# SX	CEMENT TYPE & ADDITIVES
1	160	Class "G" w/ 2% CaCL2 + 1/4#/sk Cello-Flake mixed @ 15.8 ppg 1.17 cf/sk yield

CENTRALIZER & SCRATCHER PLACEMENT	SHOW MAKE & SPACING
Centralizers - Middle first, top second & third for 3	

COMPANY REPRESENTATIVE Ray Herrera DATE 12/21/2007

FORM 3160-5
(September 2001)

UNITED STATES
DEPARTMENT OF THE INTERIOR
BUREAU OF LAND MANAGEMENT

FORM APPROVED
OMB No. 1004-0135
Expires January 31,2004

SUNDRY NOTICES AND REPORTS ON WELLS

Do not use this form for proposals to drill or to re-enter an abandoned well. Use Form 3160-3 (APD) for such proposals.

SUBMIT IN TRIPLICATE - Other Instructions on reverse side

5. Lease Serial No.
UTU-15855

6. If Indian, Allottee or Tribe Name.

7. If Unit or CA/Agreement, Name and/or

1. Type of Well
☒ Oil Well ☐ Gas Well ☐ Other

8. Well Name and No.
Federal 8-23-9-16

2. Name of Operator
NEWFIELD PRODUCTION COMPANY

9. API Well No.
4301332961

3a. Address Route 3 Box 3630
Myton, UT 84052

3b. Phone *(include are code)*
435.646.3721

10. Field and Pool, or Exploratory Area
MONUMENT BUTTE

4. Location of Well *(Footage, Sec., T., R., M., or Survey Description)*
189 FNL 535 FEL
SENE Section 23 T9S R16E

11. County or Parish, State
DUCHESNE, UT

12. CHECK APPROPRIATE BOX(ES) TO INIDICATE NATURE OF NOTICE, OR OTHER DATA

TYPE OF SUBMISSION	TYPE OF ACTION			
☐ Notice of Intent	☐ Acidize	☐ Deepen	☐ Production(Start/Resume)	☐ Water Shut-Off
☒ Subsequent Report	☐ Alter Casing	☐ Fracture Treat	☐ Reclamation	☐ Well Integrity
☐ Final Abandonment	☐ Casing Repair	☐ New Construction	☐ Recomplete	☒ Other Weekly Status Report
	☐ Change Plans	☐ Plug & Abandon	☐ Temporarily Abandon	
	☐ Convert to	☐ Plug Back	☐ Water Disposal	

13. Describe Proposed or Completed Operation (clearly state all pertinent details, including estimated starting date of any proposed work and approximate duration thereof. If the proposal is to deepen directionally or recomplete horizontally, give subsurface locations and measured and true vertical depths of all pertinent markers and zones. Attach the Bond under which the work will be performed or provide the Bond No. on file with BLM/BIA. Required subsequent reports shall be filed within 30 days following completion of the involved operations. If the operation results in a multiple completion or recompletion in a new interval, a Form 3160-4 shall be filed once testing has been completed. Final Abandonment Notices shall be filed only after all requirements, including reclamation, have been completed, and the operator has determined that the site is ready for final inspection.)

On 1/08/08 MIRU NDSI Rig # 3. Set all equipment. Pressure test Kelly, TIW, Choke manifold, & Bop's to 2,000 psi. Test 8.625 csgn to 1,500 psi. Vernal BLM field, & Roosevelt DOGM office was notifed of test. PU BHA and tag cement @ 283'. Drill out cement & shoe. Drill a 7.875 hole with fresh water to a depth of 5810'. Lay down drill string & BHA. Open hole log w/ Dig/SP/GR log's TD to surface. PU & TIH with Guide shoe, shoe jt, float collar, 134 jt's of 5.5 J-55, 15.5# csgn. Set @ 5797.92'/ KB. Cement with 300 sks cement mixed @ 11.0 ppg & 3.43 yld. The 400 sks cement mixed @ 14.4 ppg & 1.24 yld. Returned 17 bbls of cement to reserve pit. Nipple down Bop's. Drop slips @ 105,000 #'s tension. Release rig @ 12:30 AM on 1/22/08.

I hereby certify that the foregoing is true and correct *(Printed/ Typed)*
Jim Smith

Title
Drilling Foreman

Signature

Date
01/23/2008

THIS SPACE FOR FEDERAL OR STATE OFFICE USE

Approved by ..... Title ..... Date .....

Conditions of approval, if any, are attached. Approval of this notice does not warrant or certify that the applicant holds legal or equitable title to those rights in the subject lease which would entitle the applicant to conduct operations thereon.

Office

Title 18 U.S.C. Section 1001 and Title 43 U.S.C. Section 1212, make it a crime for any person knowingly and willfully to make to any department or agency of the United States any false, fictitious and fraudulent statements or representations as to any matter within its jurisdiction

(Instructions on reverse)

RECEIVED
JAN 24 2008
DIV. OF OIL, GAS & MINING

NEWFIELD PRODUCTION COMPANY - CASING & CEMENT REPORT

5 1/2" CASING SET AT 5797.92

Flt cllr @ 5742.26'

LAST CASING	8 5/8" SET @ 314.22	OPERATOR	Newfield Production Company
DATUM	12	WELL	Federal 8-23-9-16
DATUM TO CUT OFF CASING	12	FIELD/PROSPECT	Monument Butte
DATUM TO BRADENHEAD FLANGE		CONTRACTOR & RIG #	NDSI Rig # 3
TD DRILLER	5810' LOGGER 5803'		
HOLE SIZE	7 7/8"		

LOG OF CASING STRING:

PIECES	OD	ITEM - MAKE - DESCRIPTION	WT / FT	GRD	THREAD	CONDT	LENGTH
		Landing Jt					14
		Short jt @ 4009'/20.50'					
133	5 1/2"	ETC LT & C casing	15.5#	J-55	8rd	A	5742.26
							0.6
1	5 1/2"	ETC LT&C csg	15.5#	J-55	8rd	A	43.41
		GUIDE shoe			8rd	A	0.65

CASING INVENTORY BAL.	FEET	JTS
TOTAL LENGTH OF STRING	5799.92	134
LESS NON CSG. ITEMS	15.25	
PLUS FULL JTS. LEFT OUT	477.24	11
TOTAL	6258.08	145
TOTAL CSG. DEL. (W/O THRDS)	6258.08	145
TIMING	1ST STAGE	2nd STAGE
BEGIN RUN CSG.	1/21/2008	8:00 AM
CSG. IN HOLE	1/21/2008	12:00 PM
BEGIN CIRC	1/21/2008	12:15 PM
BEGIN PUMP CMT	1/21/2008	6:10 PM
BEGIN DSPL. CMT	1/21/2008	7:15 PM
PLUG DOWN	1/21/2008	7:35 PM

TOTAL LENGTH OF STRING	5799.92
LESS CUT OFF PIECE	14
PLUS DATUM TO T/CUT OFF CSG	12
CASING SET DEPTH	**5797.92**

} COMPARE

GOOD CIRC THRU JOB YES

Bbls CMT CIRC TO SURFACE 17

RECIPROCATED PIPE FOR ____ THRU ____ FT STROKE

DID BACK PRES. VALVE HOLD ? YES

BUMPED PLUG TO 2180 PSI

CEMENT USED				CEMENT COMPANY- B. J.
STAGE	# SX			CEMENT TYPE & ADDITIVES
1	300	Premlite II w/ 10% gel + 3 % KCL, 3#'s /sk CSE + 2# sk/kolseal + 1/2#'s/sk Cello Flake		
		mixed @ 11.0 ppg W / 3.43 cf/sk yield		
2	400	50/50 poz W/ 2% Gel + 3% KCL, .5%EC1,1/4# sk C.F. 2% gel. 3% SM mixed @ 14.4 ppg W/ 1.24 YLD		

CENTRALIZER & SCRATCHER PLACEMENT	SHOW MAKE & SPACING
Centralizers - Middle first, top second & third. Then every third collar for a total of 20.	

COMPANY REPRESENTATIVE Jim Smith DATE 1/21/2008

FORM 3160-5
(September 2001)

UNITED STATES
DEPARTMENT OF THE INTERIOR
BUREAU OF LAND MANAGEMENT

RECEIVED
FEB 20 2008
DIV. OF OIL, GAS & MINING

FORM APPROVED
OMB No. 1004-0135
Expires January 31,2004

SUNDRY NOTICES AND REPORTS ON WELLS

Do not use this form for proposals to drill or to re-enter an abandoned well. Use Form 3160-3 (APD) for such proposals.

SUBMIT IN TRIPLICATE - Other Instructions on reverse side

5. Lease Serial No.
UTU-15855

6. If Indian, Allottee or Tribe Name.

7 If Unit or CA/Agreement, Name and/or

1 Type of Well
☒ Oil Well ☐ Gas Well ☐ Other

8. Well Name and No.
Federal 8-23-9-16

2 Name of Operator
NEWFIELD PRODUCTION COMPANY

9. API Well No.
4301332961

3a. Address Route 3 Box 3630
Myton, UT 84052

3b. Phone *(include are code)*
435.646.3721

10. Field and Pool, or Exploratory Area
MONUMENT BUTTE

4. Location of Well *(Footage, Sec., T., R., M., or Survey Description)*
189 FNL 535 FEL
SENE Section 23 T9S R16E

11. County or Parish, State
DUCHESNE, UT

12. CHECK APPROPRIATE BOX(ES) TO INIDICATE NATURE OF NOTICE, OR OTHER DATA

TYPE OF SUBMISSION	TYPE OF ACTION			
☒ Notice of Intent	☐ Acidize	☐ Deepen	☐ Production(Start/Resume)	☐ Water Shut-Off
☐ Subsequent Report	☐ Alter Casing	☐ Fracture Treat	☐ Reclamation	☐ Well Integrity
☐ Final Abandonment	☐ Casing Repair	☐ New Construction	☐ Recomplete	☐ Other _____
	☐ Change Plans	☐ Plug & Abandon	☐ Temporarily Abandon	
	☐ Convert to	☐ Plug Back	☒ Water Disposal	

13. Describe Proposed or Completed Operation (clearly state all pertinent details, including estimated starting date of any proposed work and approximate duration thereof. If the proposal is to deepen directionally or recomplete horizontally, give subsurface locations and measured and true vertical depths of all pertinent markers and zones. Attach the Bond under which the work will be performed or provide the Bond No. on file with BLM/BIA. Required subsequent reports shall be filed within 30 days following completion of the involved operations. If the operation results in a multiple completion or recompletion in a new interval, a Form 3160-4 shall be filed once testing has been completed. Final Abandonment Notices shall be filed only after all requirements, including reclamation, have been completed, and the operator has determined that the site is ready for final inspection.)

Formation water is produced to a steel storage tank. If the production water meets quality guidelines, it is transported to the Ashley, Monument Butte, Jonah, and Beluga water injection facilities by company or contract trucks. Subsequently, the produced water is injected into approved Class II wells to enhance Newfield's secondary recovery project.

Water not meeting quality criteria, is disposed at Newfield's Pariette #4 disposal well (Sec. 7, T9S R19E) or at State of Utah approved surface disposal facilities.

Accepted by the
Utah Division of
Oil, Gas and Mining
FOR RECORD ONLY

I hereby certify that the foregoing is true and correct *(Printed/ Typed)*
Mandie Crozier

Title
Regulatory Specialist

Signature
Mandie Crozier

Date
02/19/2008

THIS SPACE FOR FEDERAL OR STATE OFFICE USE

Approved by

Title

Date

Conditions of approval, if any, are attached. Approval of this notice does not warrant or certify that the applicant holds legal or equitable title to those rights in the subject lease which would entitle the applicant to conduct operations thereon

Office

Title 18 U S C Section 1001 and Title 43 U S C Section 1212, make it a crime for any person knowingly and willfully to make to any department or agency of the United States any false, fictitious and fraudulent statements or representations as to any matter within its jurisdiction

(Instructions on reverse)

STATE OF UTAH
DEPARTMENT OF NATURAL RESOURCES
DIVISION OF OIL, GAS AND MINING

5. LEASE DESIGNATION AND SERIAL NUMBER: UTU-15855

SUNDRY NOTICES AND REPORTS ON WELLS

6. IF INDIAN, ALLOTTEE OR TRIBE NAME:

Do not use this form for proposals to drill new wells, significantly deepen existing wells below current bottom-hole depth, reenter plugged wells, or to drill horizontal laterals. Use APPLICATION FOR PERMIT TO DRILL form for such proposals.

7. UNIT or CA AGREEMENT NAME:

1. TYPE OF WELL: OIL WELL [X] GAS WELL [ ] OTHER

8. WELL NAME and NUMBER: Federal 8-23-9-16

2. NAME OF OPERATOR: NEWFIELD PRODUCTION COMPANY

9. API NUMBER: 4301332961

3. ADDRESS OF OPERATOR: Route 3 Box 3630 CITY Myton STATE UT ZIP 84052 PHONE NUMBER 435.646.3721

10. FIELD AND POOL, OR WILDCAT: MONUMENT BUTTE

4. LOCATION OF WELL:

FOOTAGES AT SURFACE: 189 FNL 535 FEL COUNTY: DUCHESNE

OTR/OTR. SECTION. TOWNSHIP. RANGE. MERIDIAN: SENE, 23, T9S, R16E STATE: UT

11. CHECK APPROPRIATE BOXES TO INDICATE NATURE OF NOTICE, REPORT, OR OTHER DATA

TYPE OF SUBMISSION	TYPE OF ACTION		
[ ] NOTICE OF INTENT (Submit in Duplicate)	[ ] ACIDIZE	[ ] DEEPEN	[ ] REPERFORATE CURRENT FORMATION
Approximate date work will	[ ] ALTER CASING	[ ] FRACTURE TREAT	[ ] SIDETRACK TO REPAIR WELL
	[ ] CASING REPAIR	[ ] NEW CONSTRUCTION	[ ] TEMPORARITLY ABANDON
	[ ] CHANGE TO PREVIOUS PLANS	[ ] OPERATOR CHANGE	[ ] TUBING REPAIR
	[ ] CHANGE TUBING	[ ] PLUG AND ABANDON	[ ] VENT OR FLAIR
[X] SUBSEQUENT REPORT (Submit Original Form Only)	[ ] CHANGE WELL NAME	[ ] PLUG BACK	[ ] WATER DISPOSAL
	[ ] CHANGE WELL STATUS	[ ] PRODUCTION (START/STOP)	[ ] WATER SHUT-OFF
Date of Work Completion:	[ ] COMMINGLE PRODUCING FORMATIONS	[ ] RECLAMATION OF WELL SITE	[X] OTHER: - Weekly Status Report
02/18/2008	[ ] CONVERT WELL TYPE	[ ] RECOMPLETE - DIFFERENT FORMATION	

12. DESCRIBE PROPOSED OR COMPLETED OPERATIONS. Clearly show all pertinent details including dates, depths, volumes, etc.

The above mentioned well went on production 2/18/08. See attached daily activity report.

NAME (PLEASE PRINT) Tammi Lee TITLE Production Clerk

SIGNATURE Tammi Lee DATE 02/29/2008

(This space for State use only)

RECEIVED
MAR 03 2008
DIV. OF OIL, GAS & MINING

Daily Activity Report

Format For Sundry

FEDERAL 8-23-9-16

12/1/2007 To 4/29/2008

2/7/2008 Day: 1 **Completion**

Rigless on 2/6/2008 - Install 5M frac head. NU 6" 5M Cameron BOP. RU H/O truck & pressure test casing, blind rams, frac head & casing valves to 4500 psi. RU Perforators LLC WLT w/ mast & run CBL under pressure. WLTD @ 5705' & cement top @ 80'. Perforate stage #1. A3 sds @ 4939- 51', A1 sds @ 4885- 4902' w/ 3 1/8" slick guns (19 gram, .49" HE, 120°, 21.92" pen, EXP-3319-331 Titan) w/ 4 spf for total of 116 shots. 137 BWTR. SIFN.

2/13/2008 Day: 2 **Completion**

Rigless on 2/12/2008 - RU BJ Services "Ram Head" frac flange. RU BJ & frac A sds, stage #1 down casing w/ 135,331#'s of 20/40 sand in 1006 bbls of Lightning 17 frac fluid. Open well w/ 0 psi on casing (took 45 bbls to load casing). Perfs broke down @ 1902 psi. Pump 30 gal of Techna Hib chemical. Treated @ ave pressure of 2046 w/ ave rate of 23.4 bpm w/ 8 ppg of sand. Spot 12 bbls of 15% HCL acid in flush for next stage. 1143 bbls EWTR. ISIP was 2249. Leave pressure on well. RU Lone Wolf WLT, crane & lubricator. RIH w/ Weatherford 5-1/2" (6K) composite flow through frac plug & 8' perf gun. Set plug @ 4820'. Perforate B1 sds @ 4725-33' w/ 3-1/8" Slick Guns (23 gram, .43"HE, 90°) w/ 4 spf for total of 32 shots. RU BJ & perfs won't break down. RIH & spot 10 gals of 15% HCL acid on perfs. RU BJ & frac stage #2 w/ 31,069#'s of 20/40 sand in 395 bbls of Lightning 17 frac fluid. Open well w/ 1090 psi on casing. Perfs broke down @ 2948 psi. Pump 30 gal of Techna Hib chemical. Treated @ ave pressure of 1821 w/ ave rate of 23.4 bpm w/ 6.5 ppg of sand. Spot 12 bbls of 15% HCL acid in flush for next stage. 1538 bbls EWTR. ISIP was 1943. Leave pressure on well. RU WLT. RIH w/ frac plug & 9' perf gun. Set plug @ 4560'. Perforate D1 sds @ 4454-63' w/ 4 spf for total of 36 shots. RU BJ & frac stage #3 w/ 45,231#'s of 20/40 sand in 429 bbls of Lightning 17 frac fluid. Open well w/ 1580 psi on casing. Perfs broke down @ 2331 psi. Pump 30 gal of Techna Hib chemical. Treated @ ave pressure of 1900 w/ ave rate of 23.4 bpm w/ 8 ppg of sand. Spot 12 bbls of 15% HCL acid in flush for next stage. 1967 bbls EWTR. ISIP was 1971. Leave pressure on well. RU WLT. RIH w/ frac plug & 9' perf gun. Set plug @ 4130'. Perforate GB6 sds @ 4015-24' w/ 4 spf for total of 36 shots. RU BJ & frac stage #4 w/ 39,181#'s of 20/40 sand in 403 bbls of Lightning 17 frac fluid. Open well w/ 1712 psi on casing. Perfs broke down @ 3410 psi. Pump 30 gal of Techna Hib chemical. Treated @ ave pressure of 1813 w/ ave rate of 23.4 bpm w/ 8 ppg of sand. 2370 bbls EWTR. ISIP was 1702. RD BJ & WLT. Flow well back. Well flowed for 4 hours & died w/ 300 bbls rec'd. SIFN.

2/14/2008 Day: 3 **Completion**

Western #4 on 2/13/2008 - MIRUSU. Thaw well out. Open well w/ 220 psi on casing. RD Cameron BOP's & 5K frac head. Instal 3K production tbg head & Schaefer BOP's. RU 4-3/4" Chomp bit (new) & bit sub. Tally & pickup of trailer (used) J-55, 6.5#, 2-7/8" tbg. TIH w/ 128 jts to tag fill @ 4035'. C/O to plug @ 4130'. RU swivel, pump & tanks. Drlg out plug #1. TIH w/ tbg to tag fill @ 4488'. C/O sand to plug @ 4560'. Drlg out plug #2. TIH w/ tbg to tag plug @ 4820'. Drlg out plug #3. TIH w/ tbg to tag sand @ 5577'. C/O to PBTD @ 5738'. SIFN.

2/15/2008 Day: 4 **Completion**

Western #4 on 2/14/2008 - MIRUSU. Thaw well out. Open well w/ vacuum psi on casing. RU swab equipment. IFL was 450'. Made 4 runs to rec's 45 bbls fluid. FFL was 800'. SIFN.

2/16/2008 Day: 5 **Completion**

Western #4 on 2/15/2008 - MIRUSU. Thaw well out. Open well w/ vacuum psi on casing. RU swab equipment. IFL was 900'. Made 16 runs to rec'd 140 bbls fluid. FFL was 2300' w/ last run shows no sand & trace of oil. RD swab. TIH w/ tbg to tag 5' of new sand. Circulate well clean to PBTD @

5738'. TOOH w/ tbg. LD bit & bit sub. TIH w/ production string, NC, 2 jts tbg, SN, 2 jts tbg, TA (new) CDI w/ 45,000# shear, 155 jts tbg. RD BOP's. Set TA @ 4907' in 16,000#'s tension w/ SN @ 4775' & EOT @ 5040'. Flush tbg w/ 60 bbls water. Well drinking water. SIFN.

2/19/2008 Day: 6 **Completion**

Western #4 on 2/18/2008 - Tbg on vacuum. PU & prime up CDI rod pump. PU & RIH w/ "B" grade rods as follows: CDI 2 1/2" X 1 1/2" X 15' RHAC, 6- 1 1/2" wt bars, 20- 3/4" guided rods, 72- 3/4" plain rods, 100- 3/4" guided rods, 1- 2', 1- 8' X 3/4" pony rods, 1 1/2" X 22' polish rod. Hang head, Space out rods. Fill tbg w/ 6 bbls of wtr. Stroke test w/ unit to 800 psi. RDMOSU. POP @ 2:00 PM w/ 86" SL @ 5 SPM. 2076 BWTR. FINAL REPORT!!!

Pertinent Files: Go to File List

FORM 3160-4
(July 1992)

SUBMIT IN DUPLICATE* (See other instructions ons reverse side)

FORM APPROVED
OMB NO. 1004-0137
Expires: February 28, 1995

UNITED STATES
DEPARTMENT OF THE INTERIOR
BUREAU OF LAND MANAGEMENT

WELL COMPLETION OR RECOMPLETION REPORT AND LOG*

5. LEASE DESIGNATION AND SERIAL NO.: U-15855

6. IF INDIAN, ALLOTTEE OR TRIBE NAME: NA

7. UNIT AGREEMENT NAME: CASTLE PEAK

8. FARM OR LEASE NAME, WELL NO.: FEDERAL 8-23-9-16

9. WELL NO.: 43-013-32961

10. FIELD AND POOL OR WILDCAT: MONUMENT BUTTE

11. SEC., T., R., M., OR BLOCK AND SURVEY OR AREA: SEC 23, T9S, R16E

1a. TYPE OF WORK: OIL WELL [X] GAS WELL [ ] DRY [ ] Other

1b. TYPE OF WELL: NEW WELL [X] WORK OVER [ ] DEEPEN [ ] PLUG BACK [ ] DIFF RESVR. [ ] Other

2. NAME OF OPERATOR: Newfield Exploration Company

3. ADDRESS AND TELEPHONE NO.: 1401 17th St. Suite 1000 Denver, CO 80202

4. LOCATION OF WELL (Report locations clearly and in accordance with any State requirements.*)
At Surface: 1891' FNL & 535' FEL SENE
At top prod. Interval reported below
At total depth

14. API NO.: 43-013-32961 | DATE ISSUED: 11/29/07

12. COUNTY OR PARISH: DUCHESNE | 13. STATE: UT

15. DATE SPUDDED: 12/13/07 | 16. DATE T.D. REACHED: 1/20/08 | 17. DATE COMPL. (Ready to prod.): 2/18/08 | 18. ELEVATIONS (DF, RKB, RT, GR, ETC.)*: 5685' GL 5697' KB | 19. ELEV. CASINGHEAD

20. TOTAL DEPTH, MD & TVD: 5810' | 21. PLUG BACK T.D., MD & TVD: 5738' | 22. IF MULTIPLE COMPL., HOW MANY* | 23. INTERVALS DRILLED BY: ------> | ROTARY TOOLS: X | CABLE TOOLS:

24. PRODUCING INTERVAL(S), OF THIS COMPLETION--TOP, BOTTOM, NAME (MD AND TVD)*: GREEN RIVER 4015'-4951'

25. WAS DIRECTIONAL SURVEY MADE: No

26. TYPE ELECTRIC AND OTHER LOGS RUN: Dual Induction Guard, SP, Compensated Density, Compensated Neutron, GR, Caliper, Cement Bond Log

27. WAS WELL CORED: No

23. CASING RECORD (Report all strings set in well)

CASING SIZE/GRADE	WEIGHT, LB./FT.	DEPTH SET (MD)	HOLE SIZE	TOP OF CEMENT, CEMENTING RECORD	AMOUNT PULLED
8-5/8" - J-55	24#	314.22'	12 1/4	To surface w/ 160 sx of class "G" cement	
5-1/2" J-55	15.5#	5797.92'	7 7/8	300sx of Primlite II & 400 sx of 50/50 poz	

29. LINER RECORD

SIZE	TOP (MD)	BOTTOM (MD)	SACKS CEMENT*	SCREEN (MD)

30. TUBING RECORD

SIZE	DEPTH SET (MD)	PACKER SET (MD)
2-7/8"	EOT @ 5040'	TA @ 4907'

31. PERFORATION RECORD (Interval, size and number)

INTERVAL	SIZE	SPF/NUMBER
A3 sds 4939'-4951', A1 sds 4885'-4902'	.49"	4/116
B1 sds 4725'-4733'	.49"	4/32
D1 sds 4454'-4463'	.49"	4/36
GB6 sds 4015'-4024'	.49"	4/36

32. ACID, SHOT, FRACTURE, CEMENT SQUEEZE, ETC.

DEPTH INTERVAL (MD)	AMOUNT AND KIND OF MATERIAL USED
4902'-4939'	Frac w/135331#'s of 20/40 sand in 1006 bbls of flui
4725'-4733'	Frac w/ 31069#'s of 20/40 sand in 395 bbls of fluid
4454'-4463'	Frac w/ 45231 #'s of 20/40 sand in 429 bbls of fluid
4015'-4024'	Frac w/39181 #'s of 20/40 sand in 403 bbls of fluid

33.* PRODUCTION

DATE FIRST PRODUCTION: 2/18/08 | PRODUCTION METHOD (Flowing, gas lift, pumping--size and type of pump): CDI 2 1/2' X 1 1/2" X 15' RHAC pump w/plunger | WELL STATUS (Producing or shut-in): PRODUCING

DATE OF TEST	HOURS TESTED	CHOKE SIZE	PROD'N. FOR TEST PERIOD	OIL--BBLS.	GAS--MCF.	WATER--BBL.	GAS-OIL RATIO
10 day ave			----->	467	403	446	439

FLOW. TUBING PRESS.	CASING PRESSURE	CALCULATED 24-HOUR RATE	OIL-BBL.	GAS--MCF.	WATER--BBL.	OIL GRAVITY-API (CORR.)
		----->				

RECEIVED
MAR 10 2008
DIV. OF OIL, GAS & MINING

34. DISPOSITION OF GAS (Sold, used for fuel, vented, etc.): Used for Fuel

TEST WITNESSED BY:

35. LIST OF ATTACHMENTS

36. I hereby certify that the foregoing and attached information is complete and correct as determined from all available records

SIGNED: Tammi Lee | TITLE: Production Technician | DATE: 2/8/2008

Tammi Lee TL

*(See Instructions and Spaces for Additional Data on Reverse Side)

Title 18 U.S.C. Section 1001, makes it a crime for any person knowingly and willfully to make to any department or agency of the United States any false, fictitious or fraudulent statements or representations as to any matter within its jurisdiction.

37. SUMMARY OF POROUS ZONES: (Show all important zones of porosity and contents thereof; cored intervals, and all drill-stem, tests, including depth interval tested, cushion used, time tool open, flowing and shut-in pressures, and recoveries);

FORMATION	TOP	BOTTOM	DESCRIPTION, CONTENTS, ETC.
			Well Name **Federal 8-23-9-16**

38. GEOLOGIC MARKERS

NAME	TOP MEAS. DEPTH	TOP TRUE VERT. DEPTH
Garden Gulch Mkr	3450'	
Garden Gulch 1	3657'	
Garden Gulch 2	3771'	
Point 3 Mkr	4033'	
X Mkr	4280'	
Y-Mkr	4314'	
Douglas Creek Mkr	4435'	
BiCarbonate Mkr	4668'	
B Limestone Mkr	4776'	
Castle Peak	5269'	
Basal Carbonate	5722'	
Wasatch	0	
Total Depth (Loggers)	5803'	

NEWFIELD

Well Name: Federal 8-23-9-16
LOCATION: S23, T9S, R16E
COUNTY/STATE: Duchesne
API: 43-013-32961

Spud Date: 12-13-07
TD: 5810'
CSG: 1-21-08
POP: 2-18-08

DATE	HRS	Oil (bbls)	Water (bbls)	Recovered Water (bbls)	Gas (mcf)	Casing Pressure (psi)	SPM	Comments
2/18/2008				2070				POP @ 2:00 P.M. w/ 86" SL @ 5 SPM. 2070 Total water to recover
2/19/2008	15	25	10	2060	0	90	5 3/4	
2/20/2008	24	32	75	1985	0	70	4 1/2	
2/21/2008	24	42	23	1962	0	55	4 1/2	
2/22/2008	24	2	0	1962	0	70	4 1/2	
2/23/2008	24	22	5	1957	0	65	4 1/2	
2/24/2008	24	50	37	1920	0	60	4 1/2	
2/25/2008	24	57	45	1875	0	90	4 1/2	
2/26/2008	24	22	93	1782	36	55	4 1/2	
2/27/2008	24	25	80	1702	36	55	4 1/2	
2/28/2008	24	68	30	1672	25	50	6	
2/29/2008	24	65	26	1646	35	65	5 3/4	
3/1/2008	24	60	0	1646	38	20	5 3/4	
3/2/2008	24	2	95	1551	35	55	5 3/4	
3/3/2008	24	50	0	1551	48	70	5 3/4	
3/4/2008	24	61	18	1533	50	60	5 3/4	
3/5/2008	24	66	72	1461	47	70	4 1/2	
3/6/2008	24	48	32	1429	53	80	4 1/2	
3/7/2008				1429				
3/8/2008				1429				
3/9/2008				1429				
3/10/2008				1429				
3/11/2008				1429				
3/12/2008				1429				
3/13/2008				1429				
3/14/2008				1429				
3/15/2008				1429				
3/16/2008				1429				
3/17/2008				1429				
3/18/2008				1429				
3/19/2008				1429				
3/20/2008				1429				
		697	**641**		**403**			
				51770				

Sundry Number: 49334 API Well Number: 43013329610000

STATE OF UTAH
DEPARTMENT OF NATURAL RESOURCES
DIVISION OF OIL, GAS, AND MINING

FORM 9

5.LEASE DESIGNATION AND SERIAL NUMBER: UTU-15855

SUNDRY NOTICES AND REPORTS ON WELLS

Do not use this form for proposals to drill new wells, significantly deepen existing wells below current bottom-hole depth, reenter plugged wells, or to drill horizontal laterals. Use APPLICATION FOR PERMIT TO DRILL form for such proposals.

6. IF INDIAN, ALLOTTEE OR TRIBE NAME:

7.UNIT or CA AGREEMENT NAME: GMBU (GRRV)

1. TYPE OF WELL Oil Well

8. WELL NAME and NUMBER: FEDERAL 8-23-9-16

2. NAME OF OPERATOR: NEWFIELD PRODUCTION COMPANY

9. API NUMBER: 43013329610000

3. ADDRESS OF OPERATOR: Rt 3 Box 3630 , Myton, UT, 84052

PHONE NUMBER: 435 646-4825 Ext

9. FIELD and POOL or WILDCAT: MONUMENT BUTTE

4. LOCATION OF WELL
FOOTAGES AT SURFACE: 1891 FNL 0535 FEL
QTR/QTR, SECTION, TOWNSHIP, RANGE, MERIDIAN: Qtr/Qtr: SENE Section: 23 Township: 09.0S Range: 16.0E Meridian: S

COUNTY: DUCHESNE

STATE: UTAH

11

CHECK APPROPRIATE BOXES TO INDICATE NATURE OF NOTICE, REPORT, OR OTHER DATA

TYPE OF SUBMISSION

- ☐ NOTICE OF INTENT — Approximate date work will start:
- ✓ SUBSEQUENT REPORT — Date of Work Completion: 3/21/2014
- ☐ SPUD REPORT — Date of Spud:
- ☐ DRILLING REPORT — Report Date:

TYPE OF ACTION

☐ ACIDIZE	☐ ALTER CASING	☐ CASING REPAIR
☐ CHANGE TO PREVIOUS PLANS	☐ CHANGE TUBING	☐ CHANGE WELL NAME
✓ CHANGE WELL STATUS	☐ COMMINGLE PRODUCING FORMATIONS	✓ CONVERT WELL TYPE
☐ DEEPEN	☐ FRACTURE TREAT	☐ NEW CONSTRUCTION
☐ OPERATOR CHANGE	☐ PLUG AND ABANDON	☐ PLUG BACK
☐ PRODUCTION START OR RESUME	☐ RECLAMATION OF WELL SITE	☐ RECOMPLETE DIFFERENT FORMATION
☐ REPERFORATE CURRENT FORMATION	☐ SIDETRACK TO REPAIR WELL	☐ TEMPORARY ABANDON
☐ TUBING REPAIR	☐ VENT OR FLARE	☐ WATER DISPOSAL
☐ WATER SHUTOFF	☐ SI TA STATUS EXTENSION	☐ APD EXTENSION
☐ WILDCAT WELL DETERMINATION	☐ OTHER	OTHER:

12. DESCRIBE PROPOSED OR COMPLETED OPERATIONS. Clearly show all pertinent details including dates, depths, volumes, etc.

The above reference well was put on injection at 10:00 AM on 03/21/2014.

NAME (PLEASE PRINT)	PHONE NUMBER	TITLE
Lucy Chavez-Naupoto	435 646-4874	Water Services Technician
SIGNATURE N/A		**DATE** 3/31/2014

RECEIVED: Mar. 31, 2014

Sundry Number: 48685 API Well Number: 43013329610000

STATE OF UTAH
DEPARTMENT OF NATURAL RESOURCES
DIVISION OF OIL, GAS, AND MINING

FORM 9

5.LEASE DESIGNATION AND SERIAL NUMBER: UTU-15855

SUNDRY NOTICES AND REPORTS ON WELLS

Do not use this form for proposals to drill new wells, significantly deepen existing wells below current bottom-hole depth, reenter plugged wells, or to drill horizontal laterals. Use APPLICATION FOR PERMIT TO DRILL form for such proposals.

6. IF INDIAN, ALLOTTEE OR TRIBE NAME:

7.UNIT or CA AGREEMENT NAME: GMBU (GRRV)

1. TYPE OF WELL Oil Well

8. WELL NAME and NUMBER: FEDERAL 8-23-9-16

2. NAME OF OPERATOR: NEWFIELD PRODUCTION COMPANY

9. API NUMBER: 43013329610000

3. ADDRESS OF OPERATOR: Rt 3 Box 3630 , Myton, UT, 84052

PHONE NUMBER: 435 646-4825 Ext

9. FIELD and POOL or WILDCAT: MONUMENT BUTTE

4. LOCATION OF WELL
FOOTAGES AT SURFACE: 1891 FNL 0535 FEL
QTR/QTR, SECTION, TOWNSHIP, RANGE, MERIDIAN: Qtr/Qtr: SENE Section: 23 Township: 09.0S Range: 16.0E Meridian: S

COUNTY: DUCHESNE

STATE: UTAH

11

CHECK APPROPRIATE BOXES TO INDICATE NATURE OF NOTICE, REPORT, OR OTHER DATA

TYPE OF SUBMISSION

- ☐ NOTICE OF INTENT — Approximate date work will start
- ✓ SUBSEQUENT REPORT — Date of Work Completion: 2/25/2014
- ☐ SPUD REPORT — Date of Spud:
- ☐ DRILLING REPORT — Report Date:

TYPE OF ACTION

☐ ACIDIZE	☐ ALTER CASING	☐ CASING REPAIR
☐ CHANGE TO PREVIOUS PLANS	☐ CHANGE TUBING	☐ CHANGE WELL NAME
✓ CHANGE WELL STATUS	☐ COMMINGLE PRODUCING FORMATIONS	✓ CONVERT WELL TYPE
☐ DEEPEN	☐ FRACTURE TREAT	☐ NEW CONSTRUCTION
☐ OPERATOR CHANGE	☐ PLUG AND ABANDON	☐ PLUG BACK
☐ PRODUCTION START OR RESUME	☐ RECLAMATION OF WELL SITE	☐ RECOMPLETE DIFFERENT FORMATION
☐ REPERFORATE CURRENT FORMATION	☐ SIDETRACK TO REPAIR WELL	☐ TEMPORARY ABANDON
☐ TUBING REPAIR	☐ VENT OR FLARE	☐ WATER DISPOSAL
☐ WATER SHUTOFF	☐ SI TA STATUS EXTENSION	☐ APD EXTENSION
☐ WILDCAT WELL DETERMINATION	☐ OTHER	OTHER:

12. DESCRIBE PROPOSED OR COMPLETED OPERATIONS Clearly show all pertinent details including dates, depths, volumes, etc.

The subject well has been converted from a producing oil well to an injection well on 02/24/2014. On 02/24/2014 Chris Jensen with the State of Utah DOGM was contacted concerning the initial MIT on the above listed well. On 02/25/2014 the casing was pressured up to 1397 psig and charted for 30 minutes with no pressure loss. The well was not injecting during the test. The tubing pressure was 450 psig during the test. There was not a State representative available to witness the test.

NAME (PLEASE PRINT)	PHONE NUMBER	TITLE
Lucy Chavez-Naupoto	435 646-4874	Water Services Technician
SIGNATURE N/A		**DATE** 3/11/2014

RECEIVED: Mar. 11, 2014

Mechanical Integrity Test
Casing or Annulas Pressure Test

Newfield Production Company
Rt. 3 Box 3630
Myton, UT 84052
435-646-3721

Witness: _____ Date: 2/25/14 Time: 8:15 am pm

Test Conducted by: Everett Unruh

Others Present: _____

Well:	Federal 8-23-9-16	Field:	Monument Butte
Well Location:	SENE Sec 23 T9S R16E Duchesne County, UT	API No:	43-013-32961

Time	Casing Pressure	
0 min	1393	psig
5	1395	psig
10	1396	psig
15	1396	psig
20	1396	psig
25	1396	psig
30 min	1397	psig
35		psig
40		psig
45		psig
50		psig
55		psig
60 min		psig

Tubing Pressure: 450 psig

Result: Pass Fail

Signature of Witness: _____

Signature of Person Conducting Test: Everett Unruh

Federal 8-23-9-16

2/25/2014 8:11:27 AM

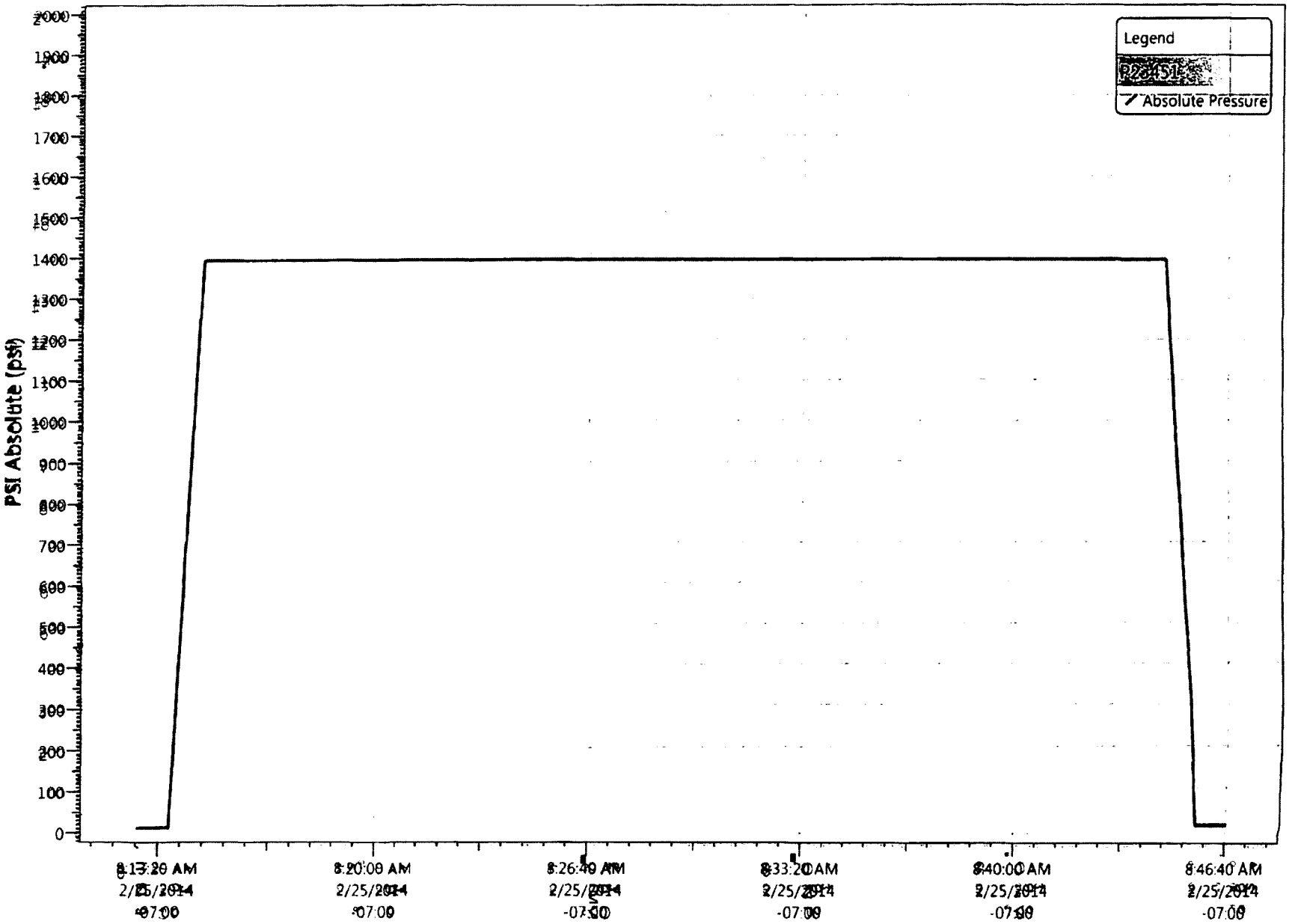

NEWFIELD

Job Detail Summary Report

Well Name: Federal 8-23-9-16

Jobs

Primary Job Type	Job Start Date	Job End Date
Conversion	2/14/2014	

Daily Operations

Report Start Date	Report End Date	24hr Activity Summary
2/14/2014	2/14/2014	RU RIG. UNHANG HORSE HEAD AND RODS. UNDEAT PUMP AND FLUSH RODS. POOH W/ RODS, ND WH, RELEASE TAC, NU BOP. RU WORK FLOOR

Start Time	End Time	Comment
05:30	07:00	TRAVEL TIME
07:00	08:00	RU RIG. PUMP DOWN CSG WITH 50 BBLS WATER @ 250 F
08:00	08:30	UNHANG RODS AND HORSES HEAD.
08:30	09:00	UNSEAT PUMP AND FLUSH RODS WITH 40 BBLS WATER @ 250 F
09:00	09:15	SOFT SEAT AND TEST TBG TO 3000 PSI. GOOD TEST
09:15	12:30	POOH WITH RODS LAYING DOWN ON TRAILER, HAD TO FLUSH RODS 2 TIMES ON WAY OUT OF WELL.
12:30	13:30	ND WH, RELEASE TAC, NU BOP, RU WORK FLOOR.
13:30	17:45	POOH WITH 123 JNTS TBG BREAKING EVERY CONNECTION, CLEANING THREADS AND INSPECTING THEM FOR DAMAGE OR GAULDING, APPLY LIQUID O RING AND RETORQUE TO SPEC. TALLY OUT.
17:45	18:00	SWIFN, CLEAN LOCATION, SDFN.
18:00	19:30	TRAVEL TIME

Report Start Date	Report End Date	24hr Activity Summary
2/18/2014	2/18/2014	CHECK TBG AND CSG PRESSURES, TBG 120 PSI, CSG 120 PSI, BD WELL, POOH WITH 35 JNTS EXCESS TBG LD ON TRAILER. PU/MU PACKER ASSY, TIH WITH PACKER ASSY AND 124 JNTS TBG

Start Time	End Time	Comment
05:30	07:00	TRAVEL TIME
07:00	09:30	CHECK TBG AND CSG PRESSURES, TBG 120 PSI, CSG 120 PSI. BD WELL, POOH WITH 35 JNTS EXCESS TBG LD ON TRAILER. HAD THE TAC HANG UP ON THE WAY OUT IN THE WELL HEAD, HAD TO BEAT ON THE TBG AND FINALLY GOT IT TO FREE UP AND POOH. BUSTED ALL DRAG PLATES OFF OF THE TAC IN THE PROCESS OF GETTING IT FREE.
09:30	10:15	PUMP 50 BBLS DOWN CSG @ 250 F TO FLUSH DRAG PLATES DOWN WELLBORE.
10:15	11:30	PU/MU PACKER ASSY, TIH WITH PACKER ASSY AND 124 JNTS TBG.
11:30	14:30	PUMP 10 BBLS PAD AND DROP S.V. PUMP TO PSN, PRESSURE UP TO 3000 PSI, HAD TO BUMP UP NUMEROUS TIMES, LOST 400 PSI IN 30 MINUTES CONSISTANTLY. BAD TEST
14:30	15:15	RU SANDLINE AND TOOLS, RIH TO CATCH S.V. POOH WITH TOOLS, RD SANDLINE.
15:15	17:00	PUMP 20 BBLS FLUSH AND DROP NEW S.V. PUMP TO PSN AND PT TBG TO 3000 PSI, BAD TESTS UNTIL 5 PM. BUMP UP AND LEAVE FOR THE NIGHT. SWIFN, CLEAN LOCATION, SDFN
17:00	18:30	TRAVEL TIME

NEWFIELD

Job Detail Summary Report

Well Name: Federal 8-23-9-16

Daily Operations

Report Start Date	Report End Date	24hr Activity Summary
2/19/2014	2/19/2014	POOH WITH 107 JNTS TBG AND FOUND H.I.T. IN JNT # 107. LD 5 JNTS TBG (2 ABOVE, 2 BELOW AND HIT JNT) AND PT TBG TO 4000 PSI, GOOD TEST. RD WORK FLOOR, ND BOP, LAND TBG, NU WH.

Start Time	End Time	Comment
05:30	07:00	TRAVEL TIME
07:00	07:30	THAW OUT TBG WITH HOT OILER, CHECK PRESSURES, TBG 300 PSI, CSG 120 PSI, BD CSG OPEN BOP
07:30	08:00	BUMP UP TBG TO 3050 PSI AND LOST ALL TBG PRESSURE IN 2 MINUTES, PUMP 10 BBLS AND TBG WENT ON A VACUUM, THOUGHT TO HAVE A H.I.T
08:00	09:30	POOH WITH 107 JNTS TBG AND FOUND H.I.T. IN JNT # 107 LD 5 JNTS TBG (2 ABOVE, 2 BELOW AND HIT JNT) AND PT TBG TO 4000 PSI, GOOD TEST
09:30	10:45	TIH WITH 5 JNTS TBG AND PT TBG TO 4000 PSI, GOOD TEST, TIH WITH 50 JNTS TBG AND PT TBG TO 4000 PSI, GOOD TEST, TIH WITH REST OF TBG AND PUMP UP TBG TO 3000 PSI.
10:45	15:30	PT TBG TO 3000 PSI, HAD TO BUMP UP AND RETEST NUMEROUS TIMES, FINALLY GOT A GOOD TBG TEST 100% FOR 30 MINUTES.
15:30	16:00	RU SANDLINE AND FISHING TOOLS, RIH TO CATCH S.V. POOH AND RD SANDLINE AND TOOLS
16:00	16:30	RD WORK FLOOR, ND BOP, LAND TBG, NU WH
16:30	17:00	PUMP 50 BBLS PACKER FLUID DOWN CSG.
17:00	17:15	ND WH, SET PACKER AND PACK OFF LAND TBG IN 15K TENSION, NU WH
17:15	17:30	LOAD CSG WITH 40 BBLS AND PT CSG TO 1400 PSI FOR THE NIGHT. SWIFN, CLEAN LOCATION, SDFN
17:30	19:00	TRAVEL TIME

Report Start Date	Report End Date	24hr Activity Summary
2/20/2014	2/20/2014	CHECK CSG PRESSURE, HAD TO RETEST, NEVER GOT A GOOD TEST, BUMP UP AND LEAVE FOR THE NIGHT

Start Time	End Time	Comment
05:30	07:00	TRAVEL TIME
07:00	08:00	HOT OILER BROKE DOWN FOR A MINUTE, HELP HOT OILER TO GET FIXED AND LOADED, HAD TO THAW OUT WH.
08:00	11:15	CHECK CSG PRESSURE, 650 PSI, BUMP UP AND START CSG PT TIMER HAD TO BUMP UP AND RETEST, NEVER GOT A GOOD CSG TEST BUMP UP AND LEAVE FOR THE NIGHT.
11:15	12:00	SWIFN, CLEAN LOCATION, SDFN. TRAVEL TO THE SAFETY STAND DOWN AND ROD HANDLING CLASS.
12:00	16:00	SAFETY STAND DOWN AND ROD HANDLING CLASS
16:00	17:30	TRAVEL TIME

NEWFIELD

Job Detail Summary Report

Well Name: Federal 8-23-9-16

Daily Operations

Report Start Date	Report End Date	24hr Activity Summary
2/21/2014	2/21/2014	CHECK CSG PRESSURE, 1130 PSI, BUMP CSG UP AND START TIMER ON CSG TEST FAILED TEST AFTER FAILED TEST, FINALLY GOT A GOOD CSG TEST BUT FOUND A VISUAL LEAK ON THE SCREW ON WH FLANGE

Start Time	End Time	Comment
05:30	07:00	TRAVEL TIME
07:00	10:30	CHECK CSG PRESSURE, 1130 PSI, BUMP CSG UP AND START TIMER ON CSG TEST. FAILED TEST AFTER FAILED TEST, FINALLY GOT A GOOD CSG TEST BUT FOUND A VISUAL LEAK ON THE SCREW ON WH FLANGE, BD PRESSURE, ND WH, TIGHTEN WH FLANGE, NU WH, PT CSG AGAIN AND STILL LEAKING FROM SCREW ON FLANGE.
10:30	11:30	BD PRESSURE, ND WH, UNSCREW WH FLANGE, CLEAN THREADS AND APPLY LIQUID O RING DOPE, TIGHTEN BACK UP AND NU WH. LOAD CSG AND PRESSURE UP TO 1400 PSI.
11:30	14:15	PT CSG TO 1400 PSI AND FAILED TESTS, HAD TO BUMP UP AND RETEST NUMEROUS TIMES, FINALLY GOT A GOOD CSG TEST
14:15	15:30	RD RIG, RACK OUT WINCH TRUCK AND TOOLS, PREP TO MOVE RIG, CLEAN LOCATION
15:30	16:30	MOVE RIG TO THE 3-21-9-17 AND SPOT IN, PREP TO RU RIG, TOO WINDY TO RU RIG, SDFN.
16:30	18:00	TRAVEL TIME

Report Start Date	Report End Date	24hr Activity Summary
2/25/2014	2/25/2014	Conduct initial MIT

Start Time	End Time	Comment
08:15	08:45	On 02/24/2014 Chris Jensen with the State of Utah DOGM was contacted concerning the initial MIT on the above listed well. On 02/25/2014 the casing was pressured up to 1397 psig and charted for 30 minutes with no pressure loss. The well was not injecting during the test. The tubing pressure was 450 psig during the test. There was not a State representative available to witness the test.

NEWFIELD

Schematic

Well Name: Federal 8-23-9-16

Surface Legal Location	API/UWI	Well RC	Lease	State/Province	Field Name	County
23-9S-16E	4301332961 0000	500159250		Utah	GMBU CTB6	DUCHESNE

Spud Date	Rig Release Date	On Production Date	Original KB Elevation (ft)	Ground Elevation (ft)	Total Depth All (TVD) (ftKB)	PBTD (All) (ftKB)
		2/14/2008	5,697	5,685		Original Hole - 5,753.0

Most Recent Job

Job Category	Primary Job Type	Secondary Job Type	Job Start Date	Job End Date
Production / Workover	Conversion	Basic	2/14/2014	2/25/2014

TD: 5,810.0 Vertical - Original Hole, 9/9/2014 9:42:28 AM

MD (ftKB)	TVD (ftKB)	Incl (°)	DLS
11.8			DLS (°...
12.1			
12.8			
80.1			
313.3			
314.3			
321.9			
3,946.9			
3,948.2			
3,949.8			
3,957.0			
3,957.3			
3,961.6			
3,963.3			
4,000.0			
4,015.1			
4,024.0			
4,454.1			
4,462.9			
4,725.1			
4,732.9			
4,884.8			
4,901.9			
4,939.0			
4,951.1			
5,753.0			
5,753.3			
5,753.9			
5,797.2			
5,797.9			
5,810.0			

Vertical schematic (actual)

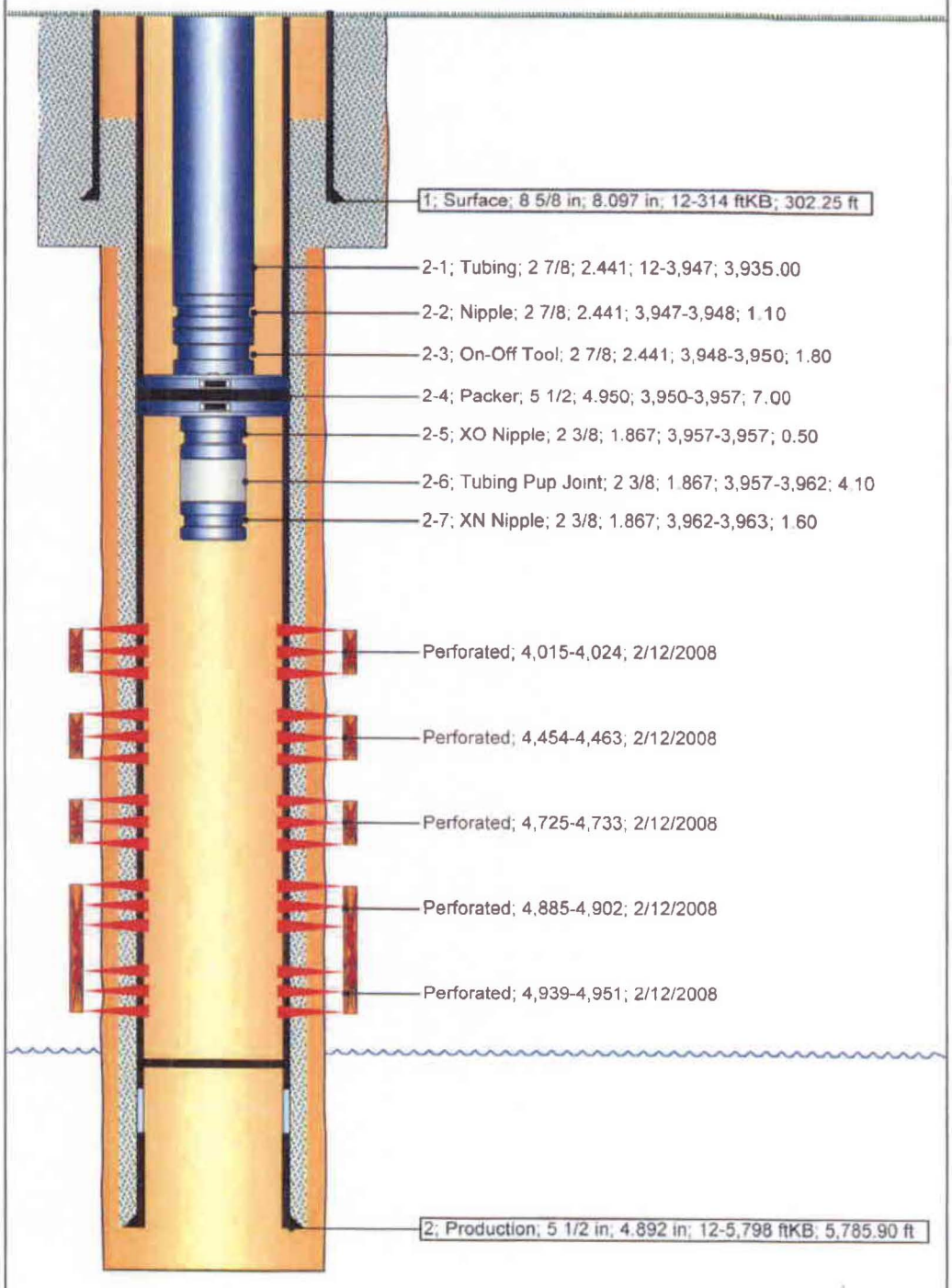

NEWFIELD

Newfield Wellbore Diagram Data
Federal 8-23-9-16

Surface Legal Location		API/UWI	Lease
23-9S-16E		43013329610000	
County: DUCHESNE	State/Province: Utah	Basin: Uintah Basin	Field Name: GMBU CTB6
Well Start Date: 12/13/2007	Spud Date	Final Rig Release Date	On Production Date: 2/14/2008
Original KB Elevation (ft): 5,697 / Ground Elevation (ft): 5,685	Total Depth (ftKB): 5,810.0	Total Depth All (TVD) (ftKB)	PBTD (All) (ftKB): Original Hole - 5,753.0

Casing Strings

Csg Des	Run Date	OD (in)	ID (in)	Wt/Len (lb/ft)	Grade	Set Depth (ftKB)
Surface	12/13/2007	8 5/8	8.097	24.00	J-55	314
Production	1/21/2008	5 1/2	4.950	15.50	J-55	5,798

Cement

String: Surface, 314ftKB 12/19/2007

Cementing Company	Top Depth (ftKB)	Bottom Depth (ftKB)	Full Return?	Vol Cement Ret (bbl)
BJ Services Company	12.0	314.2		
Fluid Description	**Fluid Type**	**Amount (sacks)**	**Class**	**Estimated Top (ftKB)**
	Lead	160	G	12.0

String: Production, 5,798ftKB 1/21/2008

Cementing Company	Top Depth (ftKB)	Bottom Depth (ftKB)	Full Return?	Vol Cement Ret (bbl)
BJ Services Company	80.0	4,000.0		
Fluid Description	**Fluid Type**	**Amount (sacks)**	**Class**	**Estimated Top (ftKB)**
Premlite II w/ 10% gel + 3 % KCL, 3#'s /sk CSE + 2# sk/kolseal + 1/2#'s/sk Cello Flake mixed @ 11.0 ppg W / 3.43 cf/sk yield	Lead	300	PL II	80.0

String: Production, 5,798ftKB 1/21/2008

Cementing Company	Top Depth (ftKB)	Bottom Depth (ftKB)	Full Return?	Vol Cement Ret (bbl)
BJ Services Company	4,000.0	5,797.9		
Fluid Description	**Fluid Type**	**Amount (sacks)**	**Class**	**Estimated Top (ftKB)**
50/50 poz W/ 2% Gel + 3% KCL, .5%EC1,1/4# sk C.F 2% gel. 3% SM mixed @ 14.4 ppg W/ 1.24 YLD	Tail	400	50/50 Poz	4,000.0

Tubing Strings

Tubing Description	Run Date	Set Depth (ftKB)
Tubing	2/21/2014	3,963.1

Item Des	Jts	OD (in)	ID (in)	Wt (lb/ft)	Grade	Len (ft)	Top (ftKB)	Btm (ftKB)
Tubing	124	2 7/8	2.441	6.50	J-55	3,935.00	12.0	3,947.0
Nipple		2 7/8	2.441			1.10	3,947.0	3,948.1
On-Off Tool		2 7/8	2.441			1.80	3,948.1	3,949.9
Packer		5 1/2	4.950			7.00	3,949.9	3,956.9
XO Nipple		2 3/8	1.867			0.50	3,956.9	3,957.4
Tubing Pup Joint		2 3/8	1.867			4.10	3,957.4	3,961.5
XN Nipple		2 3/8	1.867			1.60	3,961.5	3,963.1

Rod Strings

Rod Description	Run Date	Set Depth (ftKB)

Item Des	Jts	OD (in)	Wt (lb/ft)	Grade	Len (ft)	Top (ftKB)	Btm (ftKB)

Other In Hole

Des	Top (ftKB)	Btm (ftKB)	Run Date	Pull Date

Perforation Intervals

Stage#	Zone	Top (ftKB)	Btm (ftKB)	Shot Dens (shots/ft)	Phasing (°)	Nom Hole Dia (in)	Date
	GB6, Original Hole	4,015	4,024	4	120		2/12/2008
3	D1, Original Hole	4,454	4,463	4	120		2/12/2008
2	B1, Original Hole	4,725	4,733	4	120		2/12/2008
1	A1, Original Hole	4,885	4,902	4	120		2/12/2008
1	A3, Original Hole	4,939	4,951	4	120		2/12/2008

Stimulations & Treatments

Stage#	ISIP (psi)	Frac Gradient (psi/ft)	Max Rate (bbl/min)	Max PSI (psi)	Total Clean Vol (bbl)	Total Slurry Vol (bbl)	Vol Recov (bbl)
1	2,249	0.89	23.4	2,361			
2	1,943	0.84	23.4	2,104			
3	1,971	0.88	23.4	2,122			
4	1,702	0.86	23.4	2,090			

Proppant

Stage#	Total Prop Vol Pumped (lb)	Total Add Amount
1		Sand Sand 135331 lb

NEWFIELD

Newfield Wellbore Diagram Data
Federal 8-23-9-16

Proppant

Stage#	Total Prop Vol Pumped (lb)	Total Add Amount
2		Sand Sand 31069 lb
3		Sand Sand 45231 lb
4		Sand Sand 39181 lb

GARY R. HERBERT
Governor

SPENCER J. COX
Lieutenant Governor

State of Utah

DEPARTMENT OF NATURAL RESOURCES

MICHAEL R. STYLER
Executive Director

Division of Oil, Gas and Mining

JOHN R. BAZA
Division Director

UNDERGROUND INJECTION CONTROL PERMIT

Cause No. UIC-415

Operator: Newfield Production Company

Well: Federal 8-23-9-16

Location: Section 23, Township 9 South, Range 16 East

County: Duchesne

API No.: 43-013-32961

Well Type: Enhanced Recovery (waterflood)

Stipulations of Permit Approval

1. Approval for conversion to Injection Well issued on January 30, 2014.
2. Maximum Allowable Injection Pressure: 1,670 psig
3. Maximum Allowable Injection Rate: (restricted by pressure limitation)
4. Injection Interval: Green River Formation (3,860' – 5,738'). The injection top is limited by the Federal 9-23 well (43-013-30654), located approximately ¼ mile south of the Federal 8-23 well.
5. Any subsequent wells drilled within a ½ mile radius of this well shall have production casing cement brought up to or above the top of the unitized interval for the Greater Monument Butte Unit.

Approved by: John Rogers — 3/20/2014
John Rogers
Associate Director
Date

JR/MLR/js
cc: Bruce Suchomel, Environmental Protection Agency
Bureau of Land Management, Verna
Jill Loyle, Newfield Production Company, Denver
Newfield Production Company, Myton
Duchesne County
Well File
N:\O&G Reviewed Docs\ChronFile\UIC

1594 West North Temple, Suite 1210, PO Box 145801, Salt Lake City, UT 84114-5801
telephone (801) 538-5340 • facsimile (801) 359-3940 • TTY (801) 538-7458 • *www.ogm.utah.gov*

UTAH DNR OIL, GAS & MINING

GARY R. HERBERT
Governor

SPENCER J. COX
Lieutenant Governor

State of Utah

DEPARTMENT OF NATURAL RESOURCES

MICHAEL R. STYLER
Executive Director

Division of Oil, Gas and Mining

JOHN R. BAZA
Division Director

January 30, 2014

Newfield Production Company
1001 Seventeenth Street, Suite 2000
Denver, CO 80202

Subject: Greater Monument Butte Unit Well: Federal 8-23-9-16, Section 23, Township 9 South, Range 16 East, SLBM, Duchesne County, Utah, API Well # 43-013-32961

Ladies and Gentlemen:

Pursuant to Utah Admin. Code R649-5-3-3, the Division of Oil, Gas and Mining (the "Division") issues its administrative approval for conversion of the referenced well to a Class II injection well. Accordingly, the following stipulations shall apply for full compliance with this approval:

1. Compliance with all applicable requirements for the operation, maintenance and reporting for Underground Injection Control ("UIC") Class II injection wells pursuant to Utah Admin. Code R649-1 et seq.

2. Conformance with all conditions and requirements of the complete application submitted by Newfield Production Company.

3. A casing\tubing pressure test shall be conducted prior to commencing injection.

4. Pressure shall be monitored between the surface casing and the production casing on a regular basis. Any pressure changes observed shall be reported to the Division immediately.

5. The top of the injection interval shall be limited to a depth no higher than **3,860** feet in the Federal 8-23-9-16 well. The injection top is limited by the nearby Federal 9-23-9-16 well (43-013-30654).

A final approval to commence injection will be issued upon satisfactory completion of the listed stipulations. If you have any questions regarding this approval or the necessary requirements, please contact Mark Reinbold at 801-538-5333 or Brad Hill at 801-538-5315.

Sincerely,

John Rogers
Associate Director

JR/MLR/js
cc: Bruce Suchomel, Environmental Protection Agency
Bureau of Land Management, Vernal
Duchesne County
Newfield Production Company, Myton
Well File
N:\O&G Reviewed Docs\ChronFile\UIC

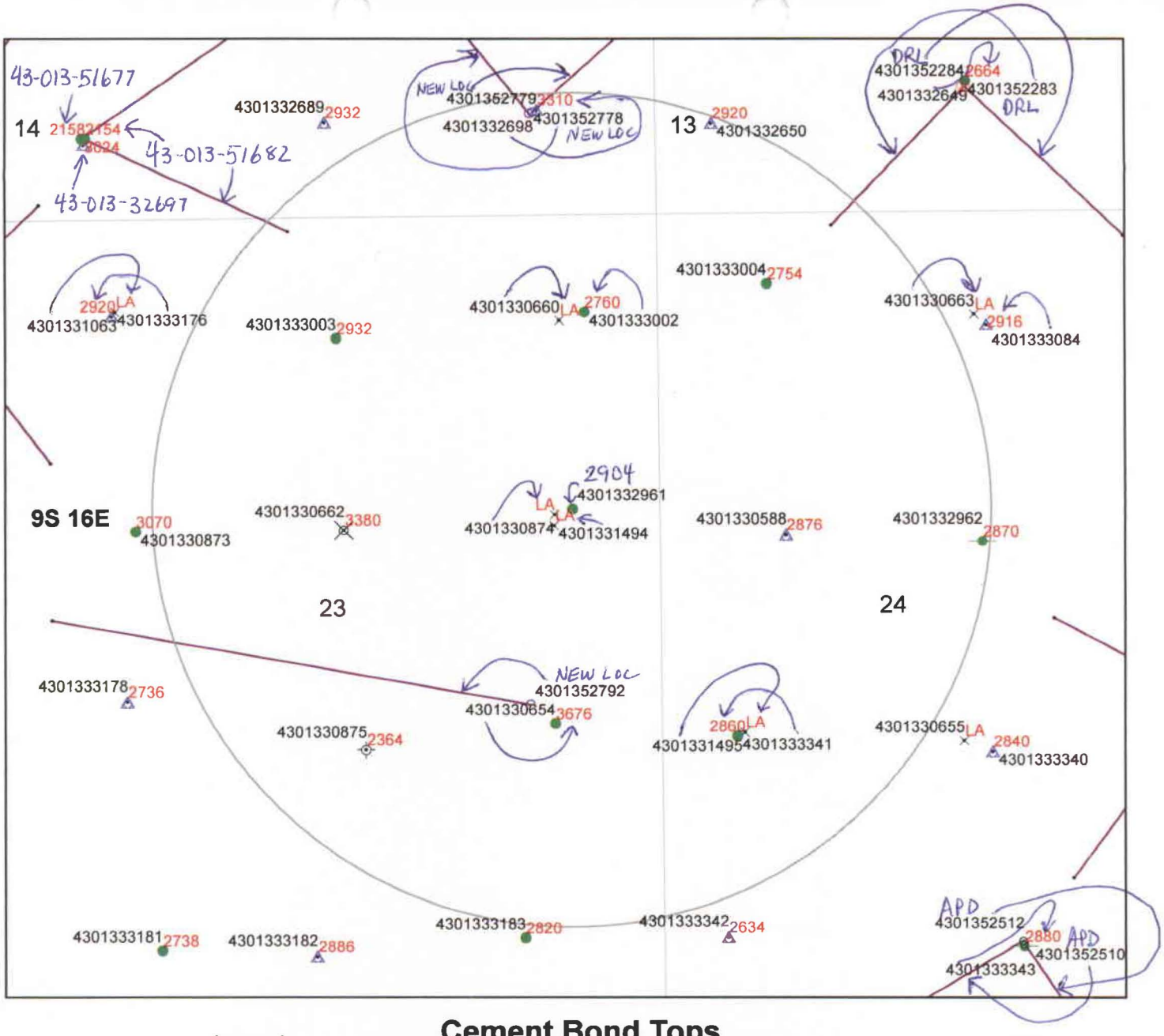

Cement Bond Tops
Federal 8-23-9-16
API #43-013-32961
UIC-415.8

N

Miles
0 0.05 0.1 0.2 0.3 0.4

Legend

Oil & Gas Well Type

- APD-Approved Permit
- DRL-Spudded (Drilling Commenced)
- GIW-Gas Injection Well
- GSW-Gas Storage Well
- LA-Location Abandoned
- LOC-New Location Well
- OPS-Drilling Operations Suspended
- PA-Pugged & Abandoned
- PGW-Producing Gas Well
- POW-Producing Oil Well
- RET-Returned APD
- SGW-Shut-in Gas Well
- SOW-Shut-in Oil Well
- TA-Temp Abandoned
- TW-Test Well
- WDW-Water Disposal Well
- WIW-WaterInjection Well
- WSW-Water Supply Well

4585 Depth to top of suitable cement bond

Well Bottom Hole Location

Oil & Gas Wells Hole Directional Path

Wells-CbltopsMaster 1-31-13

DNR Oil Gas Wells Buffer

County Boundaries

PLSS Sections

PLSS Townships

DIVISION OF OIL, GAS AND MINING
UNDERGROUND INJECTION CONTROL PROGRAM
PERMIT
STATEMENT OF BASIS

Applicant: Newfield Production Company **Well:** Federal 8-23-9-16

Location: 23/9S/16E **API:** 43-013-32961

Ownership Issues: The proposed well is located on BLM land. The well is located in the Greater Monument Butte Unit. Lands in the one-half mile radius of the well are administered by the BLM. The Federal Government is the mineral owner within the area of review (AOR). Newfield and other various individuals hold the leases in the unit. Newfield has provided a list of all surface, mineral and lease holders in the half-mile radius. Newfield is the operator of the Greater Monument Butte Unit. Newfield has submitted an affidavit stating that all owners and interest owners have been notified of their intent.

Well Integrity: The proposed well has surface casing set at 314 feet and has a cement top at the surface. A 5½ inch production casing is set at 5,798 feet. The cement bond log is somewhat problematic but appears to demonstrate adequate bond in this well up to about 2,904 feet. A 2 7/8 inch tubing with a packer will be set at 3,965 feet. Higher perforations may be opened at a later date. A mechanical integrity test will be run on the well prior to injection. Based on surface locations, there are 6 producing wells, 3 injection wells, 1 P/A well, 1 shut-in well, and 1 temporarily abandoned well in the AOR. In addition, there is 1 directionally drilled producing well with a surface location outside the AOR and a bottom hole location inside the AOR. There is 1 currently drilling directional well with a surface location outside the AOR and a bottom hole location inside the AOR. Finally, there are 2 proposed surface locations inside the AOR for wells to be drilled to bottom hole locations outside the AOR and 1 surface location inside the AOR for a directional well to be drilled to a bottom hole location outside the AOR. Most of the wells have evidence of adequate casing and cement for the proposed injection interval. However, the Federal 9-23-9-16 well (API# 43-013-30654), appears to have inadequate cement for the proposed injection interval. Its CBL (4/1/1983) indicates a suitable cement bond top at about 3,676 feet. To protect this wellbore Newfield will not perforate the Federal 8-23-9-16 well above 3,860 feet (see next paragraph).

Ground Water Protection: As interpreted from the Utah Geological Survey's DOE Project-Uinta Basin Water Draft Map (Paul B. Anderson, December 2, 2011), the base of moderately saline water (3000-10,000 mg/l TDS) is at a depth of approximately 2000 feet. The requested injection interval is between 3,770 feet and 5,738 feet in the Green River Formation. However, as described in the previous paragraph, the top of good cement bond is at about 3,676 feet in the Federal 9-23-9-16 well, located approximately ¼ mile south of the Federal 8-23-9-16 well. This cement top correlates to about 3,760 feet in the 8-23-9-16 well. For this reason, it is

recommended that the top of the injection interval be permitted no higher than a depth of 3,860 feet in the Federal 8-23-9-16 well. Information submitted by Newfield indicates that the fracture gradient for the 8-23-9-16 well is 0.77 psi/ft., which was the lowest reported fracture gradient for the injection zone. The resulting minimum fracture pressure for the proposed injection interval is 1,670 psig. The requested maximum pressure is 1,670 psig. The anticipated average injection pressure is 1100 psig. Injection at this pressure should not initiate any new fractures or propagate existing fractures in the adjacent confining intervals. Any ground water present should be adequately protected.

Oil/Gas& Other Mineral Resources Protection: The Board of Oil, Gas & Mining approved the Greater Monument Butte Unit on December 1, 2009. Correlative rights issues were addressed at this time. Previous reviews in this area indicate that other mineral resources in the area have been protected or are not at issue.

Bonding: Bonded with the BLM

Actions Taken and Further Approvals Needed: A notice of agency action has been sent to the Salt Lake Tribune and the Uinta Basin Standard. A casing/tubing pressure test will be required prior to injection. It is recommended that approval of this application be granted.

Note: Applicable technical publications concerning water resources in the general vicinity of this project have been reviewed and taken into consideration during the permit review process.

Reviewer(s): Mark Reinbold Date: 1/22/2014

4770 S. 5600 W.
P.O. BOX 704005
WEST VALLEY CITY, UTAH 84170
FED. TAX I.D.# 87-0217663
801-204-6910

The Salt Lake Tribune MEDIA One Deseret News

PROOF OF PUBLICATION CUSTOMER'S COPY

CUSTOMER NAME AND ADDRESS	ACCOUNT NUMBER	DATE
DIV OF OIL-GAS & MINING, Rose Nolton 1594 W NORTH TEMP #1210 P.O. BOX 145801 SALT LAKE CITY, UT 84114	9001402352	12/13/2013

ACCOUNT NAME	
DIV OF OIL-GAS & MINING,	
TELEPHONE	ADORDER
8015385340	0000927358
SCHEDULE	
Start 12/13/2013	End 12/13/2
CUST. REF. NO.	
Newfield Cause UIC-415	
CAPTION	
BEFORE THE DIVISION OF OIL, GAS AND MINING DEPARTME	
SIZE	
94 Lines	3.00
TIMES	
3	
MISC. CHARGES	

RECEIVED
DEC 20 2013
DIV. OF OIL, GAS & MINING

BEFORE THE DIVISION OF OIL, GAS AND MINING
DEPARTMENT OF NATURAL RESOURCES
STATE OF UTAH
NOTICE OF AGENCY ACTION CAUSE NO. UIC-415

IN THE MATTER OF THE APPLICATION OF NEWFIELD PRODUCTION COMPANY FOR ADMINISTRATIVE APPROVAL OF CERTAIN WELLS LOCATED IN SECTIONS 16, 17, 18, 19, 20, 21, 23, and 24, TOWNSHIP 9 SOUTH, RANGE 16 EAST, DUCHESNE COUNTY, UTAH, AS CLASS II INJECTION WELLS.

THE STATE OF UTAH TO ALL PERSONS INTERESTED IN THE ABOVE ENTITLED MATTER.

Notice is hereby given that the Division of Oil, Gas and Mining (the "Division") is commencing an informal adjudicative proceeding to consider the application of Newfield Production Company, 1001 17th Street, Suite 2000, Denver, Colorado 80202, telephone 303-893-0102, for administrative approval of the following wells located in Duchesne County, Utah, for conversion to Class II injection wells:

Greater Monument Butte Unit:
State 2-16-9-16 well located in NW/4 NE/4, Section 16, Township 9 South, Range 16 East
API 43-013-33846
State 13-16-9-16 well located in SW/4 SW/4, Section 16, Township 9 South, Range 16 East
API 43-013-33853
Castle Peak 32-16 well located in SW/4 NE/4, Section 16, Township 9 South, Range 16 East
API 43-013-30650
Federal 10-17-9-16 well located in NW/4 SE/4, Section 17, Township 9 South, Range 16 East
API 43-013-33033
Federal 12-17-9-16 well located in NW/4 SW/4, Section 17, Township 9 South, Range 16 East
API 43-013-33035
Federal 16-18-9-16 well located in SE/4 SE/4, Section 18, Township 9 South, Range 16 East
API 43-013-32922
Federal 2-19-9-16 well located in NW/4 NE/4, Section 19, Township 9 South, Range 16 East
API 43-013-33063
Federal 6-19-9-16 well located in SE/4 NW/4, Section 19, Township 9 South, Range 16 East
API 43-013-33100
Federal 12-19-9-16 well located in NW/4 SW/4, Section 19, Township 9 South, Range 16 East
API 43-013-33102
Federal 14-19-9-16 well located in SE/4 SW/4, Section 19, Township 9 South, Range 16 East
API 43-013-33161
Federal 16-19-9-16 well located in SE/4 SE/4, Section 19, Township 9 South, Range 16 East
API 43-013-33163
Federal 8-20-9-16 well located in SE/4 NE/4, Section 20, Township 9 South, Range 16 East
API 43-013-33107
Federal 3-21-9-16 well located in NE/4 NW/4, Section 21, Township 9 South, Range 16 East
API 43-013-33019
Federal 4-21-9-16 well located in NW/4 NW/4, Section 21, Township 9 South, Range 16 East
API 43-013-33069
Federal 8-21-9-16 well located in SE/4 NE/4, Section 21, Township 9 South, Range 16 East
API 43-013-33023
Federal 2-23-9-16 well located in NW/4 NE/4, Section 23, Township 9 South, Range 16 East
API 43-013-33003
Castle Peak Federal 6-23 well located in SE/4 NW/4, Section 23, Township 9 South, Range 16 East
API 43-013-30873
Federal 8-23-9-16 well located in SE/4 NE/4, Section 23, Township 9 South, Range 16 East
API 43-013-32961
Federal 14-24-9-16 well located in SE/4 SW/4, Section 24, Township 9 South, Range 16 East
API 43-013-33343

The proceeding will be conducted in accordance with Utah Admin. R649-10, Administrative Procedures.

Selected zones in the Green River Formation will be used for water injection. The maximum requested injection pressures and rates will be determined based on fracture gradient information submitted by Newfield Production Company.

Any person desiring to object to the application or otherwise intervene in the proceeding, must file a written protest or notice of intervention with the Division within fifteen days following publication of this notice. The Division's Presiding Officer for the proceeding is Brad Hill, Permitting Manager, at P.O. Box 145801, Salt Lake City, UT 84114-5801, phone number (801) 538-5340. If such a protest or notice of intervention is received, a hearing will be scheduled in accordance with the aforementioned administrative procedural rules. Protestants and/or intervenors should be prepared to demonstrate at the hearing how this matter affects their interests.

Dated this 11th day of December, 2013.

STATE OF UTAH
DIVISION OF OIL, GAS & MINING
/s/
Brad Hill
Permitting Manager

923758 UPAXLP

AFFIDAVIT OF PUBLICATION

AS NEWSPAPER AGENCY COMPANY, LLC dba MEDIAONE OF UTAH LEGAL BOOKER, LC
BEFORE THE DIVISION OF OIL, GAS AND MINING DEPARTMENT OF NATURAL RES
CAUSE NO. UIC-415 IN THE MATTER OF THE APPLICA FOR **DIV OF OIL-GAS & MIN**
COMPANY, LLC dba MEDIAONE OF UTAH, AGENT FOR THE SALT LAKE TRIBUNE AND D
ENGLISH LANGUAGE WITH GENERAL CIRCULATION IN UTAH, AND PUBLISHED IN SALT
NOTICE IS ALSO POSTED ON UTAHLEGALS.COM ON THE SAME DAY AS THE FIRST NEWSPAPER PUBLICATION DATE AND REMAINS ON
UTAHLEGALS.COM INDEFINATELY. COMPLIES WITH UTAH DIGITAL SIGNATURE ACT UTAH CODE 46-2-101; 46-3-104.

PUBLISHED ON Start 12/13/2013 End 12/13/2013

SIGNATURE

DATE 12/13/2013

VIRGINIA CRAFT
Notary Public State of Utah
Commission # 581469
My Commission Expires
January 12, 2014

NOTARY SIGNATURE

THIS IS NOT A STATEMENT BUT A "PROOF OF PUBLICATION"
PLEASE PAY FROM BILLING STATEMENT

2210 | R2 6/4 131

AFFIDAVIT OF PUBLICATION

County of Duchesne,
STATE OF UTAH

I, Kevin Ashby on oath, say that I am the PUBLISHER of the Uintah Basin Standard, a weekly newspaper of general circulation, published at Roosevelt, State and County aforesaid, and that a certain notice, a true copy of which is hereto attached, was published in the full issue such newspaper for 1 consecutive issues, and that the first publication was on the 17 day of December, 20 13, and that the last publication of such notice was in the issue of such newspaper dated the 17 day of December, 20 13, and that said notice was published on Utahlegals.com on the same day as the first newspaper publication and the notice remained on Utahlegals.com until the end of the scheduled run.

Kevin Ashby
Publisher

Subscribed and sworn to before me on this 23 day of December, 20 13

by Kevin Ashby.

Bonnie Parrish
Notary Public

Notary Public
BONNIE PARRISH
Commission #653427
My Commission Expires
February 23, 2016
State of Utah

RECEIVED
DEC 24 2013
DIV. OF OIL, GAS & MINING

NOTICE OF AGENCY ACTION CAUSE NO. UIC-415

BEFORE THE DIVISION OF OIL, GAS AND MINING, DEPARTMENT OF NATURAL RESOURCES, STATE OF UTAH.

IN THE MATTER OF THE APPLICATION OF NEWFIELD PRODUCTION COMPANY FOR ADMINISTRATIVE APPROVAL OF CERTAIN WELLS LOCATED IN SECTIONS 16, 17, 18, 19, 20, 21, 23, and 24, TOWNSHIP 9 SOUTH, RANGE 16 EAST, DUCHESNE COUNTY, UTAH, AS CLASS II INJECTION WELLS.

THE STATE OF UTAH TO ALL PERSONS INTERESTED IN THE ABOVE ENTITLED MATTER.

Notice is hereby given that the Division of Oil, Gas and Mining (the "Division") is commencing an informal adjudicative proceeding to consider the application of Newfield Production Company, 1001 17th Street,

Continued on next page

Continued from previous page

Suite 2000, Denver, Colorado 80202, telephone 303-893-0102, for administrative approval of the following wells located in Duchesne County, Utah, for conversion to Class II injection wells:

Greater Monument Butte Unit:

State 2-16-9-16 well located in NW/4 NE/4, Section 16, Township 9 South, Range 16 East
API 43-013-33846

State 13-16-9-16 well located in SW/4 SW/4, Section 16, Township 9 South, Range 16 East
API 43-013-33853

Castle Peak 32-16 well located in SW/4 NE/4, Section 16, Township 9 South, Range 16 East
API 43-013-30650

Federal 10-17-9-16 well located in NW/4 SE/4, Section 17, Township 9 South, Range 16 East
API 43-013-33033

Federal 12-17-9-16 well located in NW/4 SW/4, Section 17, Township 9 South, Range 16 East
API 43-013-33035

Federal 16-18-9-16 well located in SE/4 SE/4, Section 18, Township 9 South, Range 16 East
API 43-013-32922

Federal 2-19-9-16 well located in NW/4 NE/4, Section 19, Township 9 South, Range 16 East
API 43-013-33063

Federal 6-19-9-16 well located in SE/4 NW/4, Section 19, Township 9 South, Range 16 East
API 43-013-33100

Federal 12-19-9-16 well located in NW/4 SW/4, Section 19, Township 9 South, Range 16 East
API 43-013-33102

Federal 14-19-9-16 well located in SE/4 SW/4, Section 19, Township 9 South,

Any person desi ing to object to tl application or otl erwise intervene the proceeding, mu file a written prote or notice of interve tion with the Divisi within fifteen da following publicati of this notice. The D vision's Presiding C ficer for the proceedi is Brad Hill, Permitti Manager, at P.O. B 145801, Salt Lake Ci UT 84114-5801, pho number (801) 53 5340. If such a prot or notice of interve tion is received, a he ing will be schedul in accordance wi the aforemention administrative pr cedural rules. Prot tants and/or interv ers should be prepa to demonstrate at hearing how this ma affects their interes

Dated this 11th c of December, 2013

STATE OF UTA
DIVISION OF O GAS & MINING

/s/
Brad Hill
Permitting Mana

Published in Uintah Basin Stand December 17, 201

Federal 14-19-9-16 well located in SE/4 SW/4, Section 19, Township 9 South, Range 16 East

API 43-013-33161

Federal 16-19-9-16 well located in SE/4 SE/4, Section 19, Township 9 South, Range 16 East

API 43-013-33163

Federal 8-20-9-16 well located in SE/4 NE/4, Section 20, Township 9 South, Range 16 East

API 43-013-33107

Federal 3-21-9-16 well located in NE/4 NW/4, Section 21, Township 9 South, Range 16 East

API 43-013-33019

Federal 4-21-9-16 well located in NW/4 NW/4, Section 21, Township 9 South, Range 16 East

API 43-013-33069

Federal 8-21-9-16 well located in SE/4 NE/4, Section 21, Township 9 South, Range 16 East

API 43-013-33023

Federal 2-23-9-16 well located in NW/4 NE/4, Section 23, Township 9 South, Range 16 East

API 43-013-33003

Castle Peak Federal 6-23 well located in SE/4 NW/4, Section 23, Township 9 South, Range 16 East

API 43-013-30873

Federal 8-23-9-16 well located in SE/4 NE/4, Section 23, Township 9 South, Range 16 East

API 43-013-32961

Federal 14-24-9-16 well located in SE/4 SW/4, Section 24, Township 9 South, Range 16 East

API 43-013-33343

The proceeding will be conducted in accordance with Utah Admin. R649-10, Administrative Procedures.

Selected zones in the Green River Formation will be used for water injection. The maximum requested injection pressures and rates will be determined based on fracture gradient information submitted by Newfield Production Company.

141

BEFORE THE DIVISION OF OIL, GAS AND MINING
DEPARTMENT OF NATURAL RESOURCES
STATE OF UTAH
NOTICE OF AGENCY ACTION
CAUSE NO. UIC-415

IN THE MATTER OF THE APPLICATION OF NEWFIELD PRODUCTION COMPANY FOR ADMINISTRATIVE APPROVAL OF CERTAIN WELLS LOCATED IN SECTIONS 16, 17, 18, 19, 20, 21, 23, and 24, TOWNSHIP 9 SOUTH, RANGE 16 EAST, DUCHESNE COUNTY, UTAH, AS CLASS II INJECTION WELLS.

THE STATE OF UTAH TO ALL PERSONS INTERESTED IN THE ABOVE ENTITLED MATTER.

Notice is hereby given that the Division of Oil, Gas and Mining (the "Division") is commencing an informal adjudicative proceeding to consider the application of Newfield Production Company, 1001 17th Street, Suite 2000, Denver, Colorado 80202, telephone 303-893-0102, for administrative approval of the following wells located in Duchesne County, Utah, for conversion to Class II injection wells:

Greater Monument Butte Unit:

State 2-16-9-16 well located in NW/4 NE/4, Section 16, Township 9 South, Range 16 East
API 43-013-33846
State 13-16-9-16 well located in SW/4 SW/4, Section 16, Township 9 South, Range 16 East
API 43-013-33853
Castle Peak 32-16 well located in SW/4 NE/4, Section 16, Township 9 South, Range 16 East
API 43-013-30650
Federal 10-17-9-16 well located in NW/4 SE/4, Section 17, Township 9 South, Range 16 East
API 43-013-33033
Federal 12-17-9-16 well located in NW/4 SW/4, Section 17, Township 9 South, Range 16 East
API 43-013-33035
Federal 16-18-9-16 well located in SE/4 SE/4, Section 18, Township 9 South, Range 16 East
API 43-013-32922
Federal 2-19-9-16 well located in NW/4 NE/4, Section 19, Township 9 South, Range 16 East
API 43-013-33063
Federal 6-19-9-16 well located in SE/4 NW/4, Section 19, Township 9 South, Range 16 East
API 43-013-33100
Federal 12-19-9-16 well located in NW/4 SW/4, Section 19, Township 9 South, Range 16 East
API 43-013-33102
Federal 14-19-9-16 well located in SE/4 SW/4, Section 19, Township 9 South, Range 16 East
API 43-013-33161
Federal 16-19-9-16 well located in SE/4 SE/4, Section 19, Township 9 South, Range 16 East
API 43-013-33163
Federal 8-20-9-16 well located in SE/4 NE/4, Section 20, Township 9 South, Range 16 East
API 43-013-33107
Federal 3-21-9-16 well located in NE/4 NW/4, Section 21, Township 9 South, Range 16 East
API 43-013-33019
Federal 4-21-9-16 well located in NW/4 NW/4, Section 21, Township 9 South, Range 16 East
API 43-013-33069
Federal 8-21-9-16 well located in SE/4 NE/4, Section 21, Township 9 South, Range 16 East
API 43-013-33023
Federal 2-23-9-16 well located in NW/4 NE/4, Section 23, Township 9 South, Range 16 East
API 43-013-33003

Castle Peak Federal 6-23 well located in SE/4 NW/4, Section 23, Township 9 South, Range 16 East
API 43-013-30873
Federal 8-23-9-16 well located in SE/4 NE/4, Section 23, Township 9 South, Range 16 East
API 43-013-32961
Federal 14-24-9-16 well located in SE/4 SW/4, Section 24, Township 9 South, Range 16 East
API 43-013-33343

The proceeding will be conducted in accordance with Utah Admin. R649-10, Administrative Procedures.

Selected zones in the Green River Formation will be used for water injection. The maximum requested injection pressures and rates will be determined based on fracture gradient information submitted by Newfield Production Company.

Any person desiring to object to the application or otherwise intervene in the proceeding, must file a written protest or notice of intervention with the Division within fifteen days following publication of this notice. The Division's Presiding Officer for the proceeding is Brad Hill, Permitting Manager, at P.O. Box 145801, Salt Lake City, UT 84114-5801, phone number (801) 538-5340. If such a protest or notice of intervention is received, a hearing will be scheduled in accordance with the aforementioned administrative procedural rules. Protestants and/or interveners should be prepared to demonstrate at the hearing how this matter affects their interests.

Dated this 11th day of December, 2013.

STATE OF UTAH
DIVISION OF OIL, GAS & MINING

Brad Hill
Permitting Manager

Newfield Production Company

STATE 2-16-9-16, STATE 13-16-9-16, CASTLE PEAK 32-16, FEDERAL 10-17-9-16, FEDERAL 12-17-9-16, FEDERAL 16-18-9-16, FEDERAL 2-19-9-16, FEDERAL 6-19-9-16, FEDERAL 12-19-9-16, FEDERAL 14-19-9-16, FEDERAL 16-19-9-16, FEDERAL 8-20-9-16, FEDERAL 3-21-9-16, FEDERAL 4-21-9-16, FEDERAL 8-21-9-16, FEDERAL 2-23-9-16, CASTLE PEAK FEDERAL 6-23, FEDERAL 8-23-9-16, FEDERAL 14-24-9-16

Cause No. UIC-415

Publication Notices were sent to the following:

Newfield Production Company
1001 17th Street, Suite 2000
Denver, CO 80202

Uintah Basin Standard
268 South 200 East
Roosevelt, UT 84066
via e-mail ubs@ubstandard.com

Salt Lake Tribune
P O Box 45838
Salt Lake City, UT 84145
via e-mail naclegal@mediaoneutah.com

Vernal Office
Bureau of Land Management
170 South 500 East
Vernal, UT 84078

SITLA
675 E 500 S Ste 500
Salt Lake City, UT 84102-2818

Duchesne County Planning
P O Box 317
Duchesne, UT 84021-0317

Bruce Suchomel
US EPA Region 8
MS 8P-W-GW
1595 Wynkoop Street
Denver, CO 80202-1129

Newfield Production Company
Rt 3 Box 3630
Myton, UT 84052

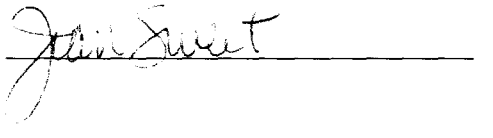

GARY R. HERBERT
Governor

SPENCER J. COX
Lieutenant Governor

State of Utah
DEPARTMENT OF NATURAL RESOURCES

MICHAEL R. STYLER
Executive Director

Division of Oil, Gas and Mining

JOHN R. BAZA
Division Director

December 12, 2013

Via e-mail: legals@ubstandard.com

Uintah Basin Standard
268 South 200 East
Roosevelt, UT 84066

Subject: Notice of Agency Action – Newfield Production Company Cause No. UIC-415

To Whom It May Concern:

Enclosed is a copy of the referenced Notice of Agency Action. Please publish the Notice, once only, as soon as possible. Please notify me via e-mail of the date it will be published. My e-mail address is: jsweet@utah.gov.

Please send proof of publication and billing to:

Division of Oil, Gas and Mining
PO Box 145801
Salt Lake City, UT 84114-5801

Sincerely,

Jean Sweet

Jean Sweet
Executive Secretary

Enclosure

1594 West North Temple, Suite 1210, PO Box 145801, Salt Lake City, UT 84114-5801
telephone (801) 538-5340 • facsimile (801) 359-3940 • TTY (801) 538-7458 • *www.ogm.utah.gov*

UTAH DNR OIL, GAS & MINING

[redacted]

Jean Sweet <jsweet@utah.gov>

Re: Notice of Agency Action – Newfield Production Company Cause No. UIC-415

1 message

UB Standard Legals <ubslegals@ubmedia.biz> Thu, Dec 12, 2013 at 1:22 PM
To: Jean Sweet <jsweet@utah.gov>

On 12/12/2013 11:59 AM, Jean Sweet wrote:

> Enclosed is a copy of the referenced Notice of Agency Action. Please publish the Notice, once only, as soon as possible. Please notify me via e-mail of the date it will be published. My e-mail address is: jsweet@utah.gov.

> Please send proof of publication and billing to:
>
> Division of Oil, Gas and Mining
>
> PO Box 145801
>
> Salt Lake City, UT 84114-5801
>
> Sincerely,
>
> Jean
> --
> Jean Sweet
> Executive Secretary
> Utah Division of Oil, Gas and Mining
> 801-538-5329

This will publish Dec. 17. Thank you. Merry Christmas.
Cindy

GARY R. HERBERT
Governor

SPENCER J. COX
Lieutenant Governor

State of Utah
DEPARTMENT OF NATURAL RESOURCES

MICHAEL R. STYLER
Executive Director

Division of Oil, Gas and Mining

JOHN R. BAZA
Division Director

December 12, 2013

VIA E-MAIL naclegal@mediaoneutah.com

Salt Lake Tribune
P. O. Box 45838
Salt Lake City, UT 84145

Subject: Notice of Agency Action – Newfield Production Company Cause No. UIC-415

To Whom It May Concern:

Enclosed is a copy of the referenced Notice of Agency Action. Please publish the Notice, once only, as soon as possible. Please notify me via e-mail of the date it will be published. My e-mail address is: jsweet@utah.gov.

Please send proof of publication and billing for **account #9001402352** to:

Division of Oil, Gas and Mining
PO Box 145801
Salt Lake City, UT 84114-5801

Sincerely,

Jean Sweet

Jean Sweet
Executive Secretary

Enclosure

[redacted]

Jean Sweet <jsweet@utah.gov>

Proof for Notice

1 message

Stowe, Ken <naclegal@mediaoneutah.com> Thu, Dec 12, 2013 at 12:34 PM
Reply-To: "Stowe, Ken" <naclegal@mediaoneutah.com>
To: jsweet@utah.gov

AD# 927358
Run SL Trib & Des News 12/13
Cost $478.76
Thank You

OrderConf.pdf
185K

The Salt Lake Tribune MEDIAONE Deseret News

Remit to: P.O. Box 704005
West Valley City, UT 84170

Order Confirmation for Ad #0000927358-01

Client	DIV OF OIL-GAS & MINING	**Payor Customer**	DIV OF OIL-GAS & MINING
Client Phone	801-538-5340	**Payor Phone**	801-538-5340
Account#	9001402352	**Payor Account**	9001402352
Address	1594 W NORTH TEMP #1210,P.O. BOX 145801 SALT LAKE CITY, UT 84114 USA	**Payor Address**	1594 W NORTH TEMP #1210,P.O. BO) SALT LAKE CITY, UT 84114
Fax	801-359-3940	**Ordered By**	**Acct. Exec**
EMail	juliecarter@utah.gov	Jean	kstowe

Total Amount	**$478.76**			
Payment Amt	**$0.00**	**Tear Sheets**	**Proofs**	**Affidavits**
Amount Due	**$478.76**	0	0	1

Payment Method **PO Number** Newfield Cause UIC-4

Confirmation Notes:

Text: Jean

Ad Type	Ad Size	Color
Legal Liner	3.0 X 94 Li	<NONE>

Product	Placement	Position
Salt Lake Tribune::	Legal Liner Notice - 0998	998-Other Legal Notices
Scheduled Date(s):	12/13/2013	
Product	**Placement**	**Position**
Deseret News::	Legal Liner Notice - 0998	998-Other Legal Notices
Scheduled Date(s):	12/13/2013	
Product	**Placement**	**Position**
utahlegals.com::	utahlegals.com	utahlegals.com
Scheduled Date(s):	12/13/2013	

Order Confirmation for Ad #0000927358-01

Ad Content Proof Actual Size

NEWFIELD

Newfield Exploration Company
1001 17th Street | Suite 2000
Denver, Colorado 80202
PH 303-893-0102 | FAX 303-893-0103

December 3, 2013

RECEIVED
DEC 05 2013
DIV. OF OIL, GAS & MINING

Mr. Mark Reinbold
State of Utah
Division of Oil, Gas and Mining
1594 W North Temple
Salt Lake City, Utah 84114-5801

RE: Permit Application for Water Injection Well
Federal #8-23-9-16
Monument Butte Field, Lease #UTU-15855
Section 23-Township 9S-Range 16E
Duchesne County, Utah

Dear Mr. Reinbold:

Newfield Production Company herein requests approval to convert the Federal #8-23-9-16 from a producing oil well to a water injection well in the Monument Butte (Green River) Field.

I hope you find this application complete; however, if you have any questions or require additional information, please contact me at (303) 893-0102.

Sincerely,

Jill L Loyle
Regulatory Associate

NEWFIELD PRODUCTION COMPANY

APPLICATION FOR APPROVAL OF CLASS II INJECTION WELL

FEDERAL #8-23-9-16

MONUMENT BUTTE FIELD (GREEN RIVER) FIELD

LEASE #UTU-15855

DECEMBER 3, 2013

TABLE OF CONTENTS

LETTER OF INTENT
COVER PAGE
TABLE OF CONTENTS
UIC FORM 1 – APPLICATION FOR INJECTION WELL
WELLBORE DIAGRAM OF PROPOSED INJECTION
WORK PROCEDURE FOR INJECTION CONVERSION
COMPLETED RULE R615-5-1 QUESTIONNAIRE
COMPLETED RULE R615-5-2 QUESTIONNAIRE

ATTACHMENT A	ONE-HALF MILE RADIUS MAP
ATTACHMENT A-1	WELL LOCATION PLAT
ATTACHMENT B	LIST OF SURFACE OWNERS WITHIN ONE-HALF MILE RADIUS
ATTACHMENT C	CERTIFICATION FOR SURFACE OWNER NOTIFICATION
ATTACHMENT E	WELLBORE DIAGRAM – FEDERAL #8-23-9-16
ATTACHMENT E-1	WELLBORE DIAGRAM – FEDERAL #2-23-9-16
ATTACHMENT E-2	WELLBORE DIAGRAM – FEDERAL #16-23-9-16
ATTACHMENT E-3	WELLBORE DIAGRAM – FEDERAL #13-13-9-16
ATTACHMENT E-4	WELLBORE DIAGRAM – FEDERAL #4-24--9-16
ATTACHMENT E-5	WELLBORE DIAGRAM – FEDERAL #6-24-9-16
ATTACHMENT E-6	WELLBORE DIAGRAM – FEDERAL #12A-24-9-16
ATTACHMENT E-7	WELLBORE DIAGRAM – CASTLE PEAK FEDERAL #7-23-9-16
ATTACHMENT E-8	WELLBORE DIAGRAM – CASTLE PEAK FEDERAL #9-23-9-16
ATTACHMENT E-9	WELLBORE DIAGRAM – CASTLE PEAK FEDERAL #12-24-9-16
ATTACHMENT E-10	WELLBORE DIAGRAM – JONAH FEDERAL #16-14-9-16
ATTACHMENT F	WATER ANALYSIS
ATTACHMENT G	FRACTURE GRADIENT CALCULATIONS
ATTACHMENT G-1	FRACTURE REPORTS DATED – *12/1/2007 – 2-19/2008*
ATTACHMENT H	WORK PROCEDURE FOR PROPOSED PLUG AND ABANDON
ATTACHMENT H-1	WELLBORE DIAGRAM OF PROPOSED PLUGGED WELL

STATE OF UTAH
DIVISION OF OIL, GAS AND MINING

APPLICATION FOR INJECTION WELL - UIC FORM 1

OPERATOR Newfield Production Company
ADDRESS 1001 17th Street, Suite 2000
Denver, Colorado 80202

Well Name and number: Federal #8-23-9-16
Field or Unit name: Monument Butte (Green River) Lease No. UTU-15855
Well Location: QQ SENE section 23 township 9S range 16E county Duchesne

Is this application for expansion of an existing project? ..... Yes [X] No [ ]
Will the proposed well be used for: Enhanced Recovery? ..... Yes [X] No [ ]
Disposal? ..... Yes [ ] No [X]
Storage? ..... Yes [ ] No [X]
Is this application for a new well to be drilled? ..... Yes [ ] No [X]
If this application is for an existing well,
has a casing test been performed on the well?..... Yes [ ] No [X]
Date of test:
API number: 43-013-32961

Proposed injection interval: from 3770 to 5738
Proposed maximum injection: rate 500 bpd pressure 1670 psig
Proposed injection zone contains [x] oil, [ ] gas, and/or [ ] fresh water within 1/2 mile of the well.

IMPORTANT: Additional information as required by R615-5-2 should accompany this form.

List of Attachments: Attachments "A" through "H-1"

I certify that this report is true and complete to the best of my knowledge.

Name: Jill L Loyle Signature Jill L Loyle
Title Regularory Associate Date 1/23/2013
Phone No. 303-383-4135

(State use only)
Application approved by Title
Approval Date

Comments:

FEDERAL 8-23-9-16

Spud Date: 12/13/07
Put on Production: 02/18/08
GL: 5685' KB: 5697'

Initial Production: BOPD, MCFD, BWPD

Proposed Injection Wellbore Diagram

SURFACE CASING

CSG SIZE: 8-5/8"
GRADE: J-55
WEIGHT: 24#
LENGTH: 7 jts. (302.37')
DEPTH LANDED: 314.22' KB
HOLE SIZE:12-1/4"
CEMENT DATA:1- 160, sxs Class "G" cmt, est 4 bbls cmt to surf.

PRODUCTION CASING

CSG SIZE: 5-1/2"
GRADE: J-55
WEIGHT: 15.5#
LENGTH: 134 jts. (5785.67')
DEPTH LANDED: 5797.92' KB
HOLE SIZE: 7-7/8"
CEMENT DATA: 300 sxs Prem. Lite II mixed & 400 sxs 50/50 POZ.
CEMENT TOP: 80'

TUBING

SIZE/GRADE/WT.: 2-7/8" / J-55
NO. OF JOINTS: 155 jts (4895.32')
TUBING ANCHOR: 4907.32' KB
NO. OF JOINTS: 2 jts (64.92')
SEATING NIPPLE: 2-7/8" (1.10')
SN LANDED AT: 4975.04' KB
NO. OF JOINTS: 2 jts (64.14')
TOTAL STRING LENGTH: EOT @ 5040.73' KB

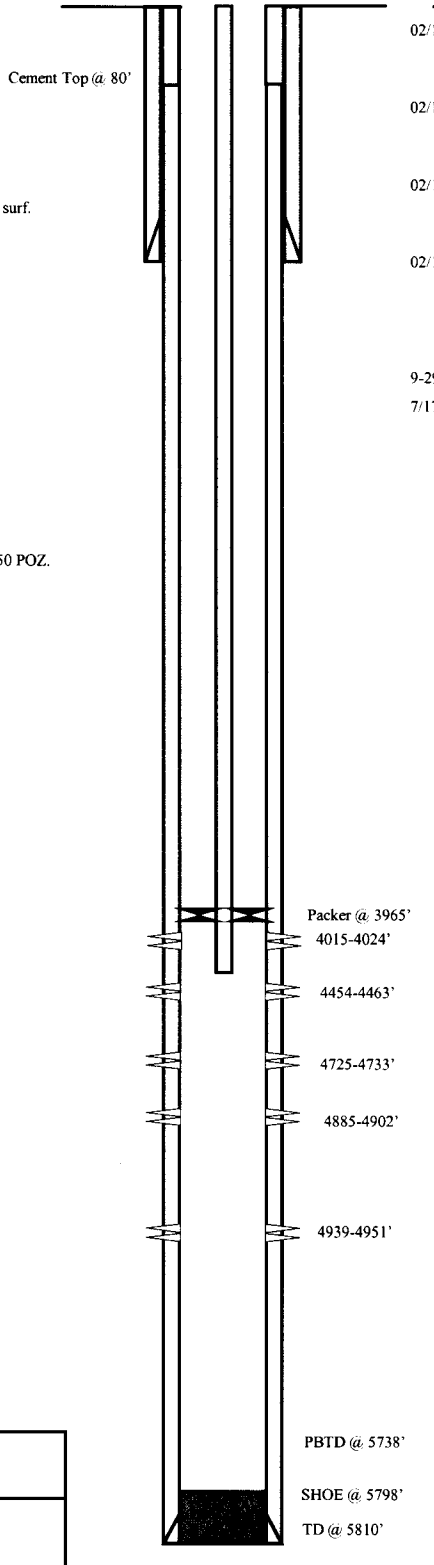

FRAC JOB

02/12/08	4885-4951'	**Frac A1 & A3 sands as follows:** 135331# 20/40 sand in 1006 bbl Lightning 17 frac fluid. Treated @ avg press of 2046 psi w/avg rate of 23.4 BPM. ISIP 2249 psi.
02/12/08	4725-4733'	**Frac B1 sands as follows:** 31069# 20/40 sand in 395 bbl Lightning 17 frac fluid. Treated @ avg press of 1821 psi w/avg rate of 23.4 BPM. ISIP 1943 psi.
02/12/08	4454-4463'	**Frac D1 sands as follows:** 45231# 20/40 sand in 429 bbls Lightning 17 frac fluid. Treated @ avg press of 1900 psi w/avg rate of 23.4 BPM. ISIP 1971 psi.
02/12/08	5000-5052'	**Frac GB6 sands as follows:** 39181# 20/40 sand in 403 bbls Lightning 17 frac fluid. Treated @ avg press of 1813 psi w/avg rate of 23.4 BPM. ISIP 1702 psi.
9-29-08		Pump Change. Updated rod &tubing details.
7/17/09		Parted rods. Updated rod & tubing details.

PERFORATION RECORD

4939-4951'	4 JSPF	48 holes
4885-4902'	4 JSPF	68 holes
4725-4733'	4 JSPF	32 holes
4454-4463'	4 JSPF	36 holes
4015-4024'	4 JSPF	36 holes

NEWFIELD

FEDERAL 8-23-9-16

1891' FNL & 535' FEL
SE/NE Section 23-T9S-R16E
Duchesne Co, Utah
API #43-013-32961; Lease # UTU-15855

JL 11/26/2013

WORK PROCEDURE FOR INJECTION CONVERSION

1. Rig up hot oil truck to casing. Pump water. Unseat pump. Flush rods. Trip out of hole with rods and pump.

2. Trip out of hole with tubing, breaking and doping every connection. Trip in hole with packer and tubing. Rig up water truck to casing. Pump packer fluid. Set packer.

3. Test casing and packer.

4. Rig down and move out.

REQUIREMENTS FOR INJECTION OF FLUIDS INTO RESERVOIRS
RULE R615-5-1

1. **Operations to increase ultimate recovery, such as cycling of gas, the maintenance of pressure, the introduction of gas, water or other substances into a reservoir for the purpose of secondary or other enhanced recovery or for storage and the injection of water into any formation for the purpose of water disposal shall be permitted only by order of the Board after notice and hearing.**

2. **A request for agency action for authority for the injection of gas, liquified petroleum gas, air, water or any other medium into any formation for any reason, including but not necessarily limited to the establishment of or the expansion of waterflood projects, enhanced recovery projects, and pressure maintenance projects shall contain:**

   2.1 **The name and address of the operator of the project.**

   Newfield Production Company
   1001 17th Street, Suite 2000
   Denver, Colorado 80202

   2.2 **A plat showing the area involved and identifying all wells, including all proposed injection wells, in the project area and within one-half mile of the project area.**

   See Attachment A.

   2.3 **A full description of the particular operation for approval is requested.**

   Approval is requested to convert the Federal #8-23-9-16 from a producing oil well to a water injection well in Monument Butte (Green River) Field.

   2.4 **A description of the pools from which the identified wells are producing or have produced.**

   The proposed injection well will inject into the Green River Formation.

   2.5 **The names, description and depth of the pool or pools to be affected.**

   The injection zone is in the Green River Formation. For the Federal #8-23-9-16 well, the proposed injection zone is from Garden Gulch to Basal Carbonate (3770' - 5738'). The confining strata directly above and below the injection zones are the Garden Gulch and the top of the Wasatch Formation or TD, which ever is shallower. The Garden Gulch Marker top is at 3450' and the TD is at 5810'.

   2.6 **A copy of a log of a representative well completed in the pool.**

   The referenced log for the Federal #8-23-9-16 is on file with the Utah Division of Oil, Gas and Mining.

2.7 A statement as to the type of fluid to be used for injection, its source and the estimated amounts to be injected daily.

The primary type and source of fluid to be used for injection will be culinary water commingled with produced water. The average estimated injection of fluids will be at a rate of 300 BPD, and the estimated maximum injection will be at a rate of 500 BPD.

2.8 A list of all operators and surface owners within one-half mile radius of the proposed project.

See Attachment B.

2.9 An affidavit certifying that said operators or owners and surface owners within a one-half mile radius have been provided a copy of the petition for injection.

See Attachment C.

2.10 Any additional information the Board may determine is necessary to adequately review the petition.

Newfield Production Company will supply any additional information requested by the Utah Division of Oil, Gas and Mining.

4.0 Establish recovery projects may be expanded and additional wells placed on injection only upon authority from the Board after notice and hearing or by administrative approval.

This proposed injection well is on a Federal lease (Lease #UTU-15855) in the Monument Butte Federal (Green River) Field, and this request is for administrative approval.

REQUIREMENTS FOR CLASS II INJECTION WELLS INCLUDING WATER DISPOSAL, STORAGE AND ENHANCED RECOVERY WELLS
SECTION V – RULE R615-5-2

1. **Injection well shall be completed, equipped, operated, and maintained in a manner that will prevent pollution and damage to any USDW, or other resources and will confine injected fluids to the interval approved.**

2. **The application for an injection well shall include a properly completed Form DOGM-UIC-1 and the following:**

   2.1 **A plat showing the location of the injection well, all abandoned or active wells within a one-half mile radius of the proposed wells, and the surface owner and the operator of any lands or producing leases, respectively, within a one-half mile radius of the proposed injection well.**

   See Attachments A and B.

   2.2 **Copies of electrical or radioactive logs, including gamma ray logs, for the proposed well run prior to the installation of casing and indicating resistivity, spontaneous potential, caliper and porosity.**

   All logs are on file with the Utah Division of Oil, Gas and Mining.

   2.3 **A copy of a cement bond or comparable log run for the proposed injection well after casing was set and cemented.**

   A copy of the cement bond log is on file with the Utah Division of Oil, Gas and Mining.

   2.4 **Copies of logs already on file with the Division should be referenced, but need not be refiled.**

   All copies of logs are on file with the Utah Division of Oil, Gas and Mining.

   2.5 **A description of the casing or proposed casing program of the injection well and of the proposed method for testing the casing before use of the well.**

   The casing program is 8-5/8", 24# surface casing run to 314' KB, and 5-1/2", 15.5# casing run from surface to 5798' KB. A casing integrity test will be conducted at the time of conversion. See Attachment E.

   2.6 **A statement as to the type of fluid to be used for injection, its source and estimated amounts to be injected daily.**

   The primary type and source of fluid to be used for injection will be culinary water commingled with produced water. The estimated average rate of injection will be 300 BPD, and the estimated maximum rate of injection will be 500 BPD.

   2.7 **Standard laboratory analysis of the fluid to be injected, the fluid in the formation into which the fluid is being injected, and the compatibility of the fluids.**

   See Attachment F.

2.8 The proposed average and maximum injection pressures.

The proposed average injection pressure will be approximately 1100 psig and the maximum injection pressure will not exceed 1670 psig.

2.9 Evidence and data to support a finding that the proposed injection well will not initiate fractures through the overlying strata or a confining interval that could enable the injected fluid or formation fluid to enter the fresh water strata.

The minimum fracture gradient for the Federal #8-23-9-16, for existing perforations (4454' - 5052') calculates at 0.77 psig/ft. The maximum injection pressures will be limited so as not to exceed this gradient. A step rate test will be performed periodically to ensure we are below parting pressure. The proposed maximum injection pressure is 1670 psig. We may add additional perforations between 3450' and 5810'. See Attachments G and G-1.

2.10 Appropriate geological data on the injection interval and confining beds, including the geologic name, lithologic description, thickness, depth, and lateral extent.

In the Federal #8-23-9-16, the proposed injection zone (3770' - 5738') is in the Garden Gulch to the Basal Carbonate of the Green River Formation. The reservoir is a very fine-grained sandstone with minor imbedded shale streaks. The estimated porosity is 13%. The members are composed of porous and permeable lenticular calcareous sandstone and low porosity carbonates and calcareous shale. The porous and lenticular sandstone varies in thickness from 0-31' and is confined to the Monument Butte Federal Field. Outside the Monument Butte Federal Field, the sandstone is composed of tight, very fine, silty, calcareous sandstone, less than 3' thick. The stratum confining the injection zone is composed of tight, moderately calcareous, sandy lacustrine shale. All of the confining strata are impermeable, and will effectively seal off the oil, gas, and water of the injection zone from any strata directly above or below it.

2.11 A review of the mechanical condition of each well within a one-half mile radius of the proposed injection well to assure that no conduit exists that could enable fluids to migrate up or down the wellbore and enter the improper intervals.

See Attachments E through E-10.

Additionally, the injection system will be equipped with high and low pressure shut down devices that will automatically shut in injection waters if a system blockage or leakage occurs. One way check valves will also ensure proper flow management. Relief valves will also be utilized for high-pressure relief.

2.12 An affidavit certifying that a copy of the application has been provided to all operators or owners, and surface owners within a one-half mile radius of the proposed injection well.

See Attachment C.

2.13 Any other information that the Board or Division may determine is necessary to adequately review the application.

Newfield Production Company will supply any requested information to the Board or Division.

ATTACHMENT A

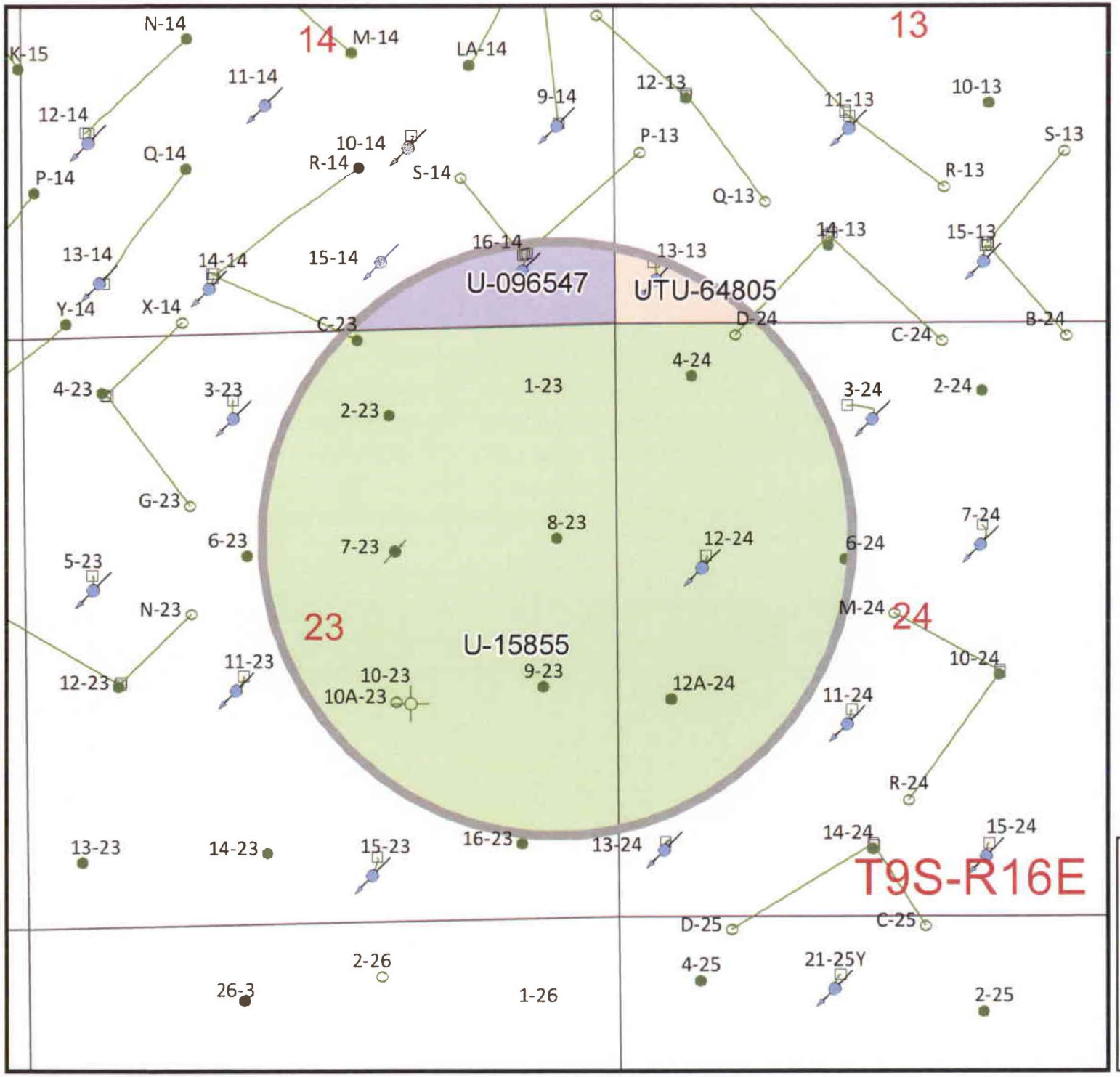

Lease Number

- U-096547
- U-15855
- UTU-64805
- Half-Mile Buffer

Well Status

- Location
- CTI
- Surface Spud
- Drilling
- Waiting on Completion
- Producing Oil Well
- Producing Gas Well
- Water Injection Well
- Dry Hole
- Temporarily Abandoned
- Plugged & Abandoned
- Shut In
- Well Surface Location

Federal 8-23-9-16
Section 23, T9S-R16E

NEWFIELD
ROCKY MOUNTAINS

N

1 in = 1,250 feet

1/2 Mile Radius Map

Duchesne County

1001 17th Street Suite 2000
Denver, Colorado 80202
Phone (303) 893-0102

Nov. 6, 2013

ATTACHMENT A-1

T9S, R16E, S.L.B.&M.

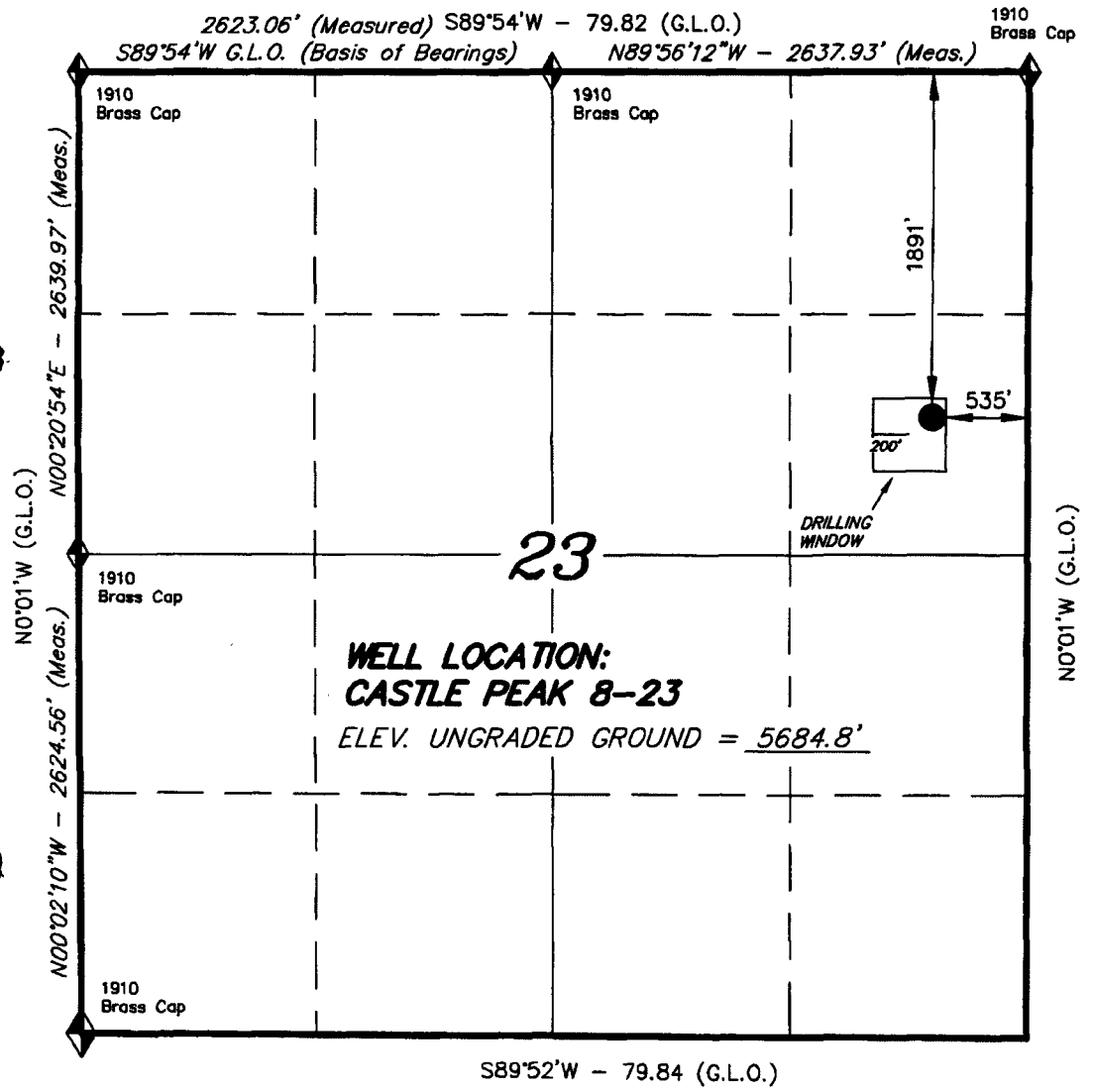

◆ = SECTION CORNERS LOCATED

BASIS OF ELEV; U.S.G.S. 7-1/2 min QUAD (MYTON SE)

NEWFIELD PRODUCTION COMPANY

WELL LOCATION, CASTLE PEAK 8-23, LOCATED AS SHOWN IN THE SE 1/4 NE 1/4 OF SECTION 23, T9S, R16E, S.L.B.&M. DUCHESNE COUNTY, UTAH.

N

Note:
The Proposed Well head bears S16°12'51"W 1969.15' from the Northeast Corner of Section 23.

THIS IS TO CERTIFY THAT THE ABOVE PLAT WAS PREPARED FROM FIELD NOTES OF ACTUAL SURVEYS MADE BY ME OR UNDER MY SUPERVISION AND THAT THE SAME ARE TRUE AND CORRECT TO THE BEST OF MY KNOWLEDGE AND BELIEF.

REGISTERED LAND SURVEYOR No.189377 STATE OF UTAH

STACY W. STEWART

REGISTERED LAND SURVEYOR
REGISTRATION No. 189377
STATE OF UTAH

TRI STATE LAND SURVEYING & CONSULTING
180 NORTH VERNAL AVE. - VERNAL, UTAH 84078
(435) 781-2501

SCALE: 1" = 1000'	SURVEYED BY: D.P.
DATE: 10-4-05	DRAWN BY: F.T.M.
NOTES:	FILE #

EXHIBIT B

#	Legal Description	Lessor & Expiration	Lessee & Operating Rights	Surface Owner
1	T9S-R16E SLM	USA	Newfield Production Company	USA
	Section 11: W2SW, SESW	UTU-096547	Newfield RMI LLC	
	Section 14: SWNE, W2, W2SE, SESE	HBP	Yates Petroleum Corporation	
			ABO Petroleum Corp	
			Myco Industries Inc	
			Oxy Y-1 Company	
2	T9S-16E SLM	USA	Newfield Production Company	USA
	Section 23: E2, NW, E2SW, NWSW	UTU-15855	Newfield RMI LLC	
	Section 24: N2, SW, N2SE, SWSE	HBP	Bee Hive Oil LLC	
			Journey Properties LLC	
			King Oil & Gas of Texas LTD	
			Six Gold Oil LLC	
			Stone Energy Corp	
3	T9S-R16E SLM	USA	Newfield Production Company	USA
	Section 13: NWNE, NENW, S2N2, S2	UTU-64805	Newfield RMI LLC	
		HBP	ABO Petro Corp	
			MYCO Industries Inc	
			OXY Y-1 Company	
			Yates Petroleum Corp	

ATTACHMENT C

CERTIFICATION FOR SURFACE OWNER NOTIFICATION

RE: Application for Approval of Class II Injection Well
Federal #8-23-9-16

I hereby certify that a copy of the injection application has been provided to all surface owners within a one-half mile radius of the proposed injection well.

Signed: _____
Newfield Production Company
Jill L Loyle
Regulatory Associate

Sworn to and subscribed before me this 3rd day of December, 2013.

Notary Public in and for the State of Colorado: _____

My Commission Expires: 12/31/15

LYDIA BIONDO
Notary Public
State of Colorado

ATTACHMENT E

FEDERAL 8-23-9-16

Spud Date: 12/13/07
Put on Production: 02/18/08
GL: 5685' KB: 5697'

Wellbore Diagram

Initial Production: BOPD, MCFD, BWPD

SURFACE CASING

CSG SIZE: 8-5/8"
GRADE: J-55
WEIGHT: 24#
LENGTH: 7 jts. (302.37')
DEPTH LANDED: 314.22' KB
HOLE SIZE:12-1/4"
CEMENT DATA:1- 160, sxs Class "G" cmt, est 4 bbls cmt to surf.

PRODUCTION CASING

CSG SIZE: 5-1/2"
GRADE: J-55
WEIGHT: 15.5#
LENGTH: 134 jts. (5785.67')
DEPTH LANDED: 5797.92' KB
HOLE SIZE: 7-7/8"
CEMENT DATA: 300 sxs Prem. Lite II mixed & 400 sxs 50/50 POZ.
CEMENT TOP: 80'

TUBING

SIZE/GRADE/WT.: 2-7/8" / J-55
NO. OF JOINTS: 155 jts (4895.32')
TUBING ANCHOR: 4907.32' KB
NO. OF JOINTS: 2 jts (64.92')
SEATING NIPPLE: 2-7/8" (1.10')
SN LANDED AT: 4975.04' KB
NO. OF JOINTS: 2 jts (64.14')
TOTAL STRING LENGTH: EOT @ 5040.73' KB

SUCKER RODS

POLISHED ROD: 1-1/2" x 22' SM polished rods
SUCKER RODS: 1-2', 1-8' X 3/4" Pony Rods, 100-3/4" scrapered rods, 72-3/4" plain rods, 20-3/4" scrapered rods, 6-1 ½" weight rods.
PUMP SIZE: CDI 2-1/2" x 1-1/2" x 15' RHAC w/Sm Plunger
STROKE LENGTH: 86"
PUMP SPEED, 5 SPM:

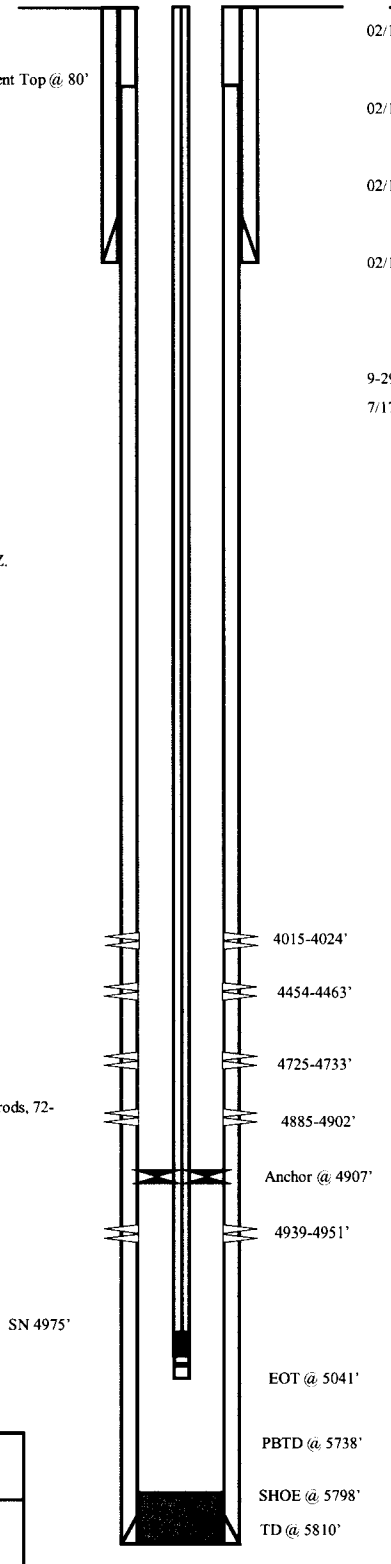

FRAC JOB

02/12/08	4885-4951'	**Frac A1 & A3 sands as follows:** 135331# 20/40 sand in 1006 bbl Lightning 17 frac fluid. Treated @ avg press of 2046 psi w/avg rate of 23.4 BPM. ISIP 2249 psi.
02/12/08	4725-4733'	**Frac B1 sands as follows:** 31069# 20/40 sand in 395 bbl Lightning 17 frac fluid. Treated @ avg press of 1821 psi w/avg rate of 23.4 BPM. ISIP 1943 psi.
02/12/08	4454-4463'	**Frac D1 sands as follows:** 45231# 20/40 sand in 429 bbls Lightning 17 frac fluid. Treated @ avg press of 1900 psi w/avg rate of 23.4 BPM. ISIP 1971 psi.
02/12/08	5000-5052'	**Frac GB6 sands as follows:** 39181# 20/40 sand in 403 bbls Lightning 17 frac fluid. Treated @ avg press of 1813 psi w/avg rate of 23.4 BPM. ISIP 1702 psi.
9-29-08		Pump Change. Updated rod &tubing details.
7/17/09		Parted rods. Updated rod & tubing details.

PERFORATION RECORD

4939-4951'	4 JSPF	48 holes
4885-4902'	4 JSPF	68 holes
4725-4733'	4 JSPF	32 holes
4454-4463'	4 JSPF	36 holes
4015-4024'	4 JSPF	36 holes

NEWFIELD

FEDERAL 8-23-9-16

1891' FNL & 535' FEL

SE/NE Section 23-T9S-R16E

Duchesne Co, Utah

API #43-013-32961; Lease # UTU-15855

DF 8/31/09

Attachment E-1

FEDERAL 2-23-9-16

Spud Date: 12/06/07
Put on Production: 02/11/08
GL: 5678' KB: 5690'

Wellbore Diagram

Initial Production: BOPD, MCFD, BWPD

SURFACE CASING

CSG SIZE: 8-5/8"
GRADE: J-55
WEIGHT: 24#
LENGTH: 7 jts. (312.96')
DEPTH LANDED: 324.81' KB
HOLE SIZE: 12-1/4"
CEMENT DATA: 1- 160, sxs Class "G" cmt, est 4 bbls cmt to surf.

Cement Top @ 156'

FRAC JOB

02/05/08	4910-4938'	**Frac A1 sands as follows:** 170350# 20/40 sand in 1190 bbl Lightning 17 frac fluid. Treated @ avg press of 1318 psi w/avg rate of 23.6 BPM. ISIP 1809 psi.
02/06/08	4621-4629'	**Frac C sands as follows:** 14890# 20/40 sand in 264 bbl Lightning 17 frac fluid. Treated @ avg press of 1847 psi w/avg rate of 23.5 BPM. ISIP 1806 psi.
02/06/08	4493-4500'	**Frac D1 sands as follows:** 9119# 20/40 sand in 237 bbls Lightning 17 frac fluid. Treated @ avg press of 2210 psi w/avg rate of 23.5 BPM. ISIP 2088 psi.
8-1-08		Pump change. Updated rod & tubing details.
12/21/09		Pump change. Updated rod and tubing detail

PRODUCTION CASING

CSG SIZE: 5-1/2"
GRADE: J-55
WEIGHT: 15.5#
LENGTH: 135 jts. (5818.10')
DEPTH LANDED: 5831.23' KB
HOLE SIZE: 7-7/8"
CEMENT DATA: 300 sxs Prem. Lite II mixed & 400 sxs 50/50 poz.
CEMENT TOP: 156'

TUBING

SIZE/GRADE/WT.: 2-7/8" / J-55 / 6.5#
NO. OF JOINTS: 154 jts (4888')
TUBING ANCHOR: 4888' KB
NO. OF JOINTS: 2 jts (62.8')
SEATING NIPPLE: 2-7/8" (1.10')
SN LANDED AT: 4953.6' KB
NO. OF JOINTS: 2 jts (64.2')
TOTAL STRING LENGTH: EOT @ 5019' KB

SUCKER RODS

POLISHED ROD: 1-1/2" x 26'
SUCKER RODS: 1- 2'x ¾" pony rod, 1- 4'x ¾" pony rod, 1- 6'x ¾" pony rod, 1- 8'x ¾" pony rod, 100- ¾" guided rods, 72- ¾" guided rods, 20- ¾" guided rods, 6- 1 ½" weight bars
PUMP SIZE: 2-1/2" x 1-1/2" x 16' x 20' RHAC
STROKE LENGTH: 102"
PUMP SPEED, SPM: 5

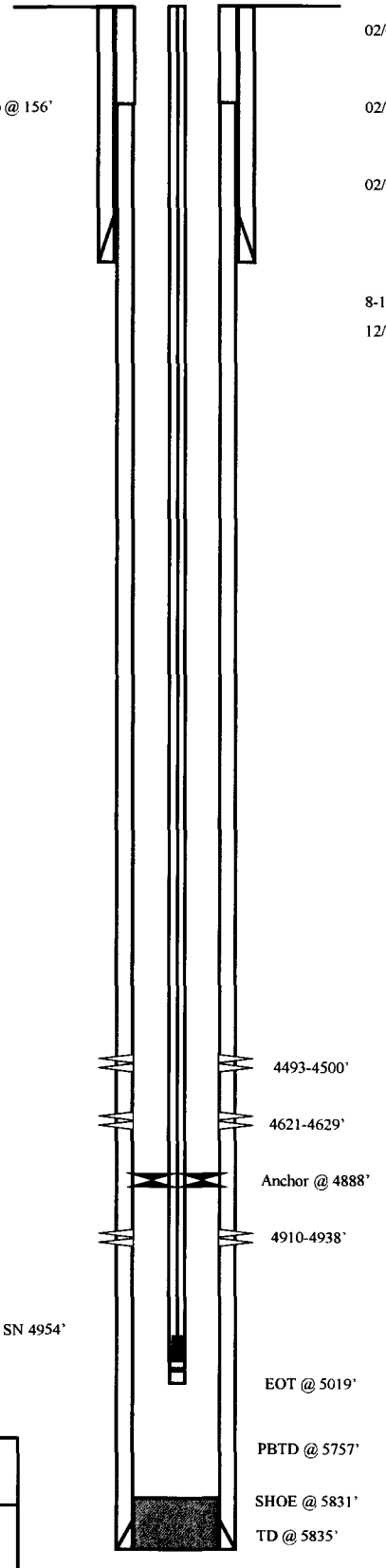

PERFORATION RECORD

4910-4938'	4 JSPF	112 holes
4621-4629'	4 JSPF	32 holes
4493-4500'	4 JSPF	28 holes

NEWFIELD

FEDERAL 2-23-9-16
760' FNL & 2032' FEL
NW/NE Section 23-T9S-R16E
Duchesne Co, Utah
API #43-013-33003; Lease # UTU-15855

ML 1/13/09

ATTACHMENT E-2

Federal 16-23-9-16

Wellbore Diagram

Spud Date: 11-13-07
Put on Production: 2-06-08
GL: 5699' KB: 5711'

SURFACE CASING

CSG SIZE: 8-5/8"
GRADE: J-55
WEIGHT: 24#
LENGTH: 7 jts. (312.75')
DEPTH LANDED:324.6
HOLE SIZE: 12-1/4"
CEMENT DATA: 160 sxs Class "G" cmt

PRODUCTION CASING

CSG SIZE: 5-1/2"
GRADE: J-55
WEIGHT: 15.5#
LENGTH: 132jts. (5686.17')
HOLE SIZE: 7-7/8"
DEPTH LANDED: 5699.42'
CEMENT DATA: 300 sk Prem. Lite II mixed & 400 sxs 50/50 POZ.
CEMENT TOP AT: 132'

TUBING

SIZE/GRADE/WT.: 2-7/8" / J-55
NO. OF JOINTS: 148 jts (4643.0')
TUBING ANCHOR: 4643.0'
NO. OF JOINTS: 1 jts (31.4')
SEATING NIPPLE: 2-7/8" (1.10')
SN LANDED AT: 4677.2' KB
NO. OF JOINTS: 2 jts (62.8')
TOTAL STRING LENGTH: EOT @ 4741' w/12' KB

SUCKER RODS

POLISHED ROD: 1-1/2" x 26'
SUCKER RODS: 102- ¾" guided rods, 54- ¾" guided rods rods, 20- ¾" guided rods, 6- 1 ½" weight rods
PUMP SIZE: 2-1/2' x 1-1/2" x 16' x 20' RHAC pump w/ SM plunger
STROKE LENGTH: 86"
PUMP SPEED, SPM: 4

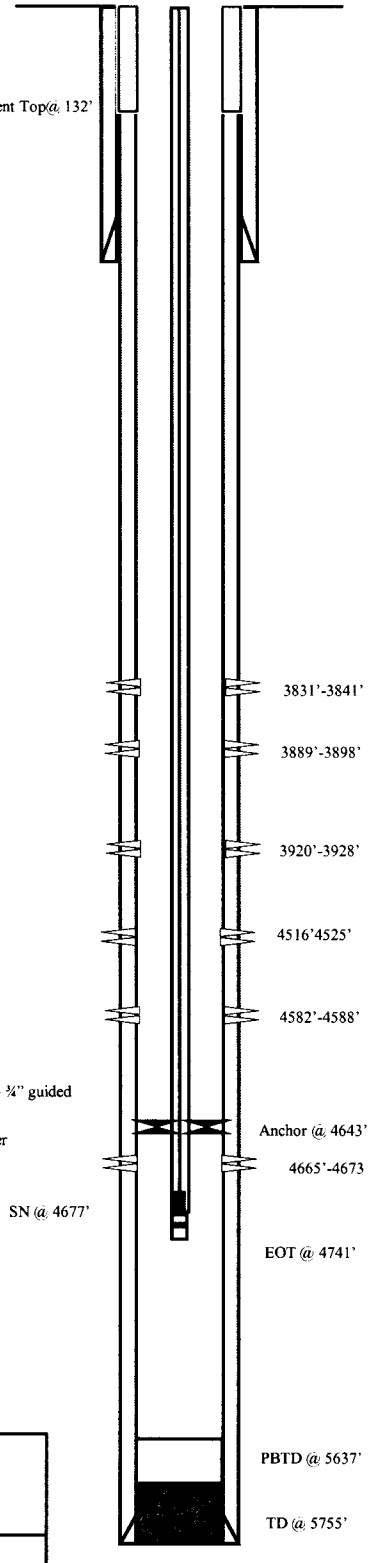

FRAC JOB

2/01/08	4665'-4673'	**Frac B2 sands as follows:** Frac with 14023 # 20/40 sand in 307bbls Lightning 17 fluid. Treat at an ave pressure of 2365 psi @ 23.1 BPM. ISIP 2100 psi.
2/01/08	4582-4588'	**Frac B.5 sands as follows:** Frac with 17722 # 20/40 sand in **349** bbls Lightning 17 fluid. Treat at 2413 psi @ 23.3 BPM. ISIP 2271 psi.
2/01/08	4516'-4525'	**Frac C sands as follows:** Frac with 53502# 20/40 sand in 479bbls Lightning 17 fluid. Treat at an ave pressure 2599psi @ 23.3 BPM. ISIP 2120 psi.
2/01/08	3889'-3928'	**Frac GB6 & GB4 sand as follows:** Frac with 75504# 20/40 sand in 632 bbls Lightning 17 fluid. Treat at an ave pressure of 1555 psi @ 23.4 BPM. ISIP 1625 psi.
2/01/08	3831'-3841'	**Frac GB2 sands as follows:** Frac with 24213# 20/40 sand in 248 bbls Lightning 17 fluid. Treat at an ave pressure of 1840 psi @ 23.2 BPM. ISIP 1760 psi.
8-12-08		Pump Change. Updated rod & tubing details.
10/8/09		Pump Change. Updated rod & tubing details.
11/23/2010		Pump change. Updated rod and tubing detail.

PERFORATION RECORD

3831'-3841'	4 JSPF	40 holes
3889'-3898'	4 JSPF	36 holes
3920'-3928'	4 JSPF	32 holes
4516'-4525'	4 JSPF	36 holes
4582'-4588'	4 JSPF	24 holes
4665'-4673'	4 JSPF	32 holes

NEWFIELD

Federal 16-23-9-16
693' FSL & 857' FEL
SESE Section 23-T9S-R16E
Duchesne Co, Utah
API #43-013-33183; Lease #UTU-15855

ML 12/8/10

ATTACHMENT E-3

FEDERAL 13-13-9-16

Spud Date: 04/13/07

Put on Production: 05/23/07

GL: 5592' KB: 5604'

Initial Production: 53 BOPD, 3 MCFD, 88 BWPD

Injection Wellbore Diagram

SURFACE CASING

CSG SIZE: 8-5/8"

GRADE: J-55

WEIGHT: 24#

LENGTH: 7 jts. (309.33')

DEPTH LANDED: 319.33' KB

HOLE SIZE:12-1/4"

CEMENT DATA: 160 sxs Class "G" cmt, est 4 bbls cmt to surf.

PRODUCTION CASING

CSG SIZE: 5-1/2"

GRADE: J-55

WEIGHT: 15.5#

LENGTH: 131 jts. (5793.19')

DEPTH LANDED: 5789.19' KB

HOLE SIZE: 7-7/8"

CEMENT DATA: 325 sxs Prem. Lite II mixed & 425 sxs 50/50 POZ.

TUBING

SIZE/GRADE/WT.: 2-7/8" / J-55 / 6.5#

NO. OF JOINTS: 126 jts (3906.4')

SEATING NIPPLE: 2-7/8" (1.10')

SN LANDED AT: 3918.4' KB

ON/OFF TOOL AT: 3919.5'

ARROW #1 PACKER CE AT: 3924.9'

XO 2-3/8 x 2-7/8 J-55 AT: 3928.3'

TBG PUP 2-3/8 J-55 AT: 3928.8'

X/N NIPPLE AT: 3932.9'

TOTAL STRING LENGTH: EOT @ 3934.27'

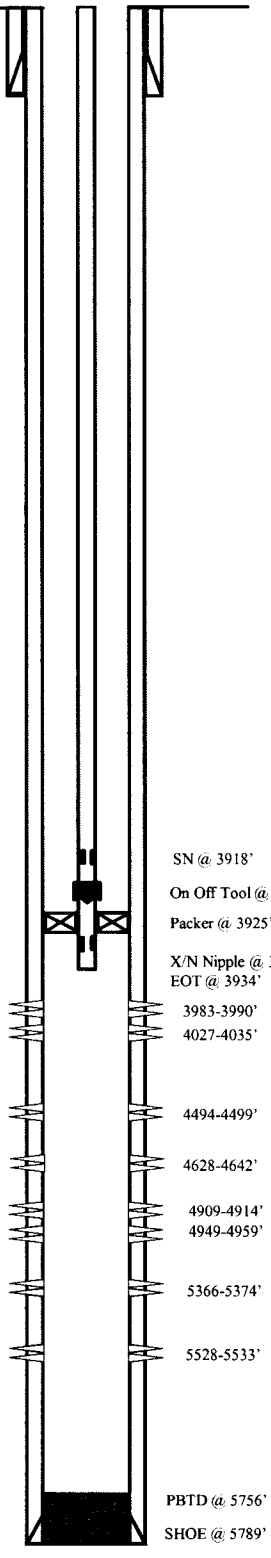

FRAC JOB

05/15/07	5528-5533'	**Frac CP3 sands as follows:** 14792# 20/40 sand in 265 bbls Lightning 17 frac fluid. Treated @ avg press of 2351 psi w/avg rate of 24.8 BPM. ISIP 2074 psi. Calc flush: 5526 gal. Actual flush: 5019 gal.
05/15/07	5366-5374'	**Frac CP1 sands as follows:** 40830# 20/40 sand in 346 bbls Lightning 17 frac fluid. Treated @ avg press of 1857 psi w/avg rate of 22.6 BPM. ISIP 1997 psi. Calc flush: 5364 gal. Actual flush: 4868 gal.
05/18/07	4909-4959'	**Frac A1&3 sands as follows:** 67943# 20/40 sand in 542 bbls Lightning 17 frac fluid. Treated @ avg press of 1919 psi w/avg rate of 24.7 BPM. ISIP 1970 psi. Calc flush: 4907 gal. Actual flush: 4406 gal.
05/18/07	4628-4642'	**Frac C sands as follows:** 29975# 20/40 sand in 345 bbls Lightning 17 frac fluid. Treated @ avg press of 1884 psi w/avg rate of 24.7 BPM. ISIP 1910 psi. Calc flush: 4626 gal. Actual flush: 4124 gal
05/18/07	4494-4499'	**Frac D1 sands as follows:** 14891# 20/40 sand in 237 bbls Lightning 17 frac fluid. Treated @ avg press of 1954 psi w/avg rate of 24.7 BPM. ISIP 1980 psi. Calc flush: 4492 gal. Actual flush: 3990 gal
05/18/07	3983-4035'	**Frac GB4&6 sands as follows:** 56438# 20/40 sand in 443 bbls Lightning 17 frac fluid. Treated @ avg press of 1550 psi w/avg rate of ? BPM. ISIP 1685 psi. Calc flush: 3981 gal. Actual flush: 3910 gal
7/17/08		**Pump change**. updated rod and tubing detail.
1/20/2010		**Pump change**. Updated rod and tubing detail.
12/11/12		**Convert to Injection Well**
12/12/12		**Conversion MIT Finalized** – update tbg detail

PERFORATION RECORD

05/02/07	5528-5533'	4 JSPF	20 holes
05/15/07	5366-5374'	4 JSPF	32 holes
05/15/07	4949-4959'	4 JSPF	40 holes
05/15/07	4909-4914'	4 JSPF	20 holes
05/18/07	4628-4642'	4 JSPF	56 holes
05/18/07	4494-4499'	4 JSPF	20 holes
05/18/07	4027-4035'	4 JSPF	32 holes
05/18/07	3983-3990'	4 JSPF	28 holes

NEWFIELD

FEDERAL 13-13-9-16

555'FSL & 344' FWL

SW/SW Section 13-T9S-R16E

Duchesne Co, Utah

API #43-013-32650; Lease # UTU-64805

LCN 12/18/12

ATTACHMENT E-4

FEDERAL 4-24-9-16

Spud Date: 12/12/07
Put on Production: 02/26/08
GL: 5613' KB: 5625'

Wellbore Diagram

Initial Production: BOPD, MCFD, BWPD

SURFACE CASING

CSG SIZE: 8-5/8"
GRADE: J-55
WEIGHT: 24#
LENGTH: 7 jts. (304.16')
DEPTH LANDED: 316.01' KB
HOLE SIZE:12-1/4"
CEMENT DATA:1- 160, sxs Class "G" cmt, est 3 bbls cmt to surf.

PRODUCTION CASING

CSG SIZE: 5-1/2"
GRADE: J-55
WEIGHT: 15.5#
LENGTH: 134 jts. (5745.08')
DEPTH LANDED: 5758.33' KB
HOLE SIZE: 7-7/8"
CEMENT DATA: 300 sxs Prem. Lite II mixed & 400 sxs 50/50 POZ.
CEMENT TOP: 84'

TUBING

SIZE/GRADE/WT.: 2-7/8" / J-55 / 6.5#
NO. OF JOINTS: 169 jts (5298.24')
TUBING ANCHOR: 5310.24' KB
NO. OF JOINTS: 2 jts (62.78')
SEATING NIPPLE: 2-7/8" (1.10')
SN LANDED AT: 5375.82' KB
NO. OF JOINTS: 2 jts (62.76')
TOTAL STRING LENGTH: EOT @ 5440.13' KB

SUCKER RODS

POLISHED ROD: 1-1/2" x 26' SM polished rods
SUCKER RODS: 1 – ¾" x 2' Pony Rod, 1 – ¾" x 4' Pony Rod, 1 – ¾" x 6' Pony Rod, 99 – ¾" Guided Rods, 89 – ¾" Plain Rods, 20 – ¾" Guided Rods, 6 – 1 ½" weight bars
PUMP SIZE: CDI 2 ½" x 1 ½" x 12 x 19 1/2' 'RHAC
STROKE LENGTH: 102"
PUMP SPEED: 5 SPM

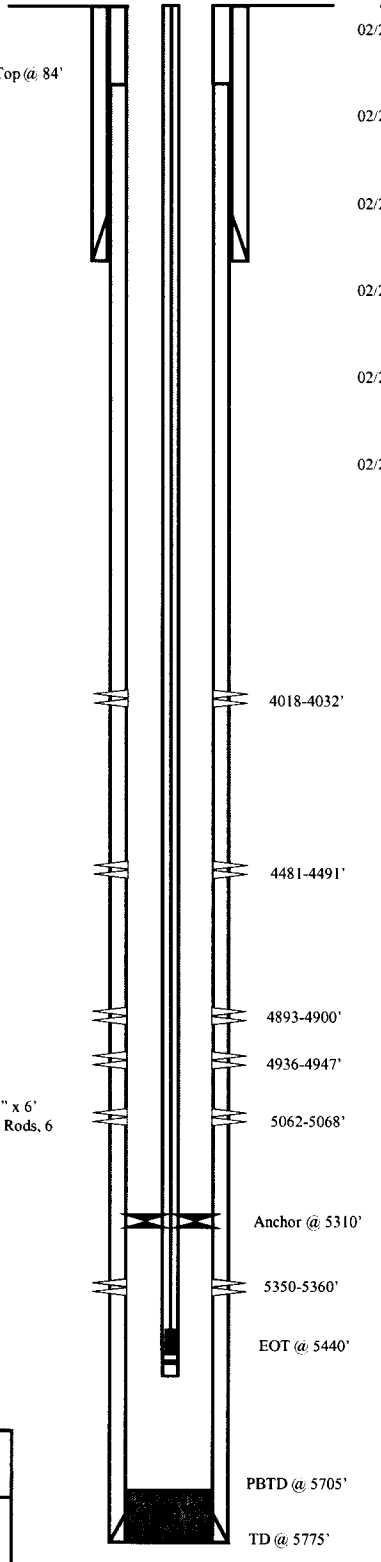

FRAC JOB

02/21/08 5350-5360' **Frac CP1 sands as follows:** 19538# 20/40 sand in 318 bbls Lightning 17 frac fluid. Treated @ avg press of 2319 psi w/avg rate of 23.0 BPM. ISIP 2169 psi.

02/21/08 5062-5068' **Frac LODC sands as follows:** 14448# 20/40 sand in 267 bbl Lightning 17 frac fluid. Treated @ avg press of 2913 psi w/avg rate of 23.1 BPM. ISIP 3354 psi.

02/21/08 4936-4947' **Frac A3, sands as follows:** 79356# 20/40 sand in 628 bbls Lightning 17 frac fluid. Treated @ avg press of 2038 psi w/avg rate of 23.1 BPM. ISIP 2069 psi.

02/21/08 4893-4900' **Frac A1 sands as follows:** 79356# 20/40 sand in 628 bbls Lightning 17 frac fluid. Treated @ avg press of 2038 psi w/avg rate of 23.1 BPM. ISIP 2069 psi.

02/21/08 4481-4491' **Frac D1 sands as follows:** 54904# 20/40 sand in 482 bbls Lightning 17 frac fluid. Treated @ avg press of 2070 psi w/avg rate of 23.1 BPM. ISIP 2153 psi.

02/21/08 4018-4032' **Frac GB6 sands as follows:** 74458# 20/40 sand in 594 bbls Lightning 17 frac fluid. Treated @ avg press of 2125 psi w/avg rate of 23.1 BPM. ISIP 1788 psi.

PERFORATION RECORD

02/21/08	5350-5360'	4 JSPF	40 holes
02/21/08	5062-5068'	4 JSPF	24 holes
02/21/08	4936-4947'	4 JSPF	44 holes
02/21/08	4893-4900'	4 JSPF	28 holes
02/23/08	4481-4491'	4 JSPF	40 holes
02/23/08	4018-4032'	4 JSPF	56 holes

NEWFIELD

FEDERAL 4-24-9-16
462' FNL & 679' FWL
NW/NW Section 24-T9S-R16E
Duchesne Co, Utah
API #43-013-33004; Lease # UTU-15855

TW 04/15/08
Updated by CS 4/12/12

ATTACHMENT E-5

FEDERAL 6-24-9-16

Spud Date: 11/02/07
Put on Production: 12/12/07
GL: 5611' KB: 5623'

Wellbore Diagram

Initial Production: BOPD, MCFD, BWPD

SURFACE CASING

CSG SIZE: 8-5/8"
GRADE: J-55
WEIGHT: 24#
LENGTH: 7 jts. (312.81')
DEPTH LANDED: 324.66' KB
HOLE SIZE:12-1/4"
CEMENT DATA: 160 sxs Class "G" cmt, est 3 bbls cmt to surf.

PRODUCTION CASING

CSG SIZE: 5-1/2"
GRADE: J-55
WEIGHT: 15.5#
LENGTH: 149 jts. (5761.33')
DEPTH LANDED: 5750' KB
HOLE SIZE: 7-7/8"
CEMENT DATA: 300 sxs Prem. Lite II mixed & 400 sxs 50/50 POZ.
CEMENT TOP: 68'

TUBING

SIZE/GRADE/WT.: 2-7/8" / J-55 / 6.5#
NO. OF JOINTS: 172 jts (5400')
TUBING ANCHOR: 5399.5' KB
NO. OF JOINTS: 1 jts (32.6')
SEATING NIPPLE: 2-7/8" (1.10')
SN LANDED AT: 5434.9' KB
NO. OF JOINTS: 2 jts (62.9')
TOTAL STRING LENGTH: EOT @ 5499' KB

SUCKER RODS

POLISHED ROD: 1-1/2" x 22' SM polished rods
SUCKER RODS: 1-4' x 3/4" pony rods, 99-3/4" guided rods, 45-3/4" guided rods, 66-3/4" guided rods, 6-1 ½" weight rods.
PUMP SIZE: CDI 2-1/2" x 1-1/2" x 12x 18'
SPM 82"
PUMP SPEED, 4 SPM:

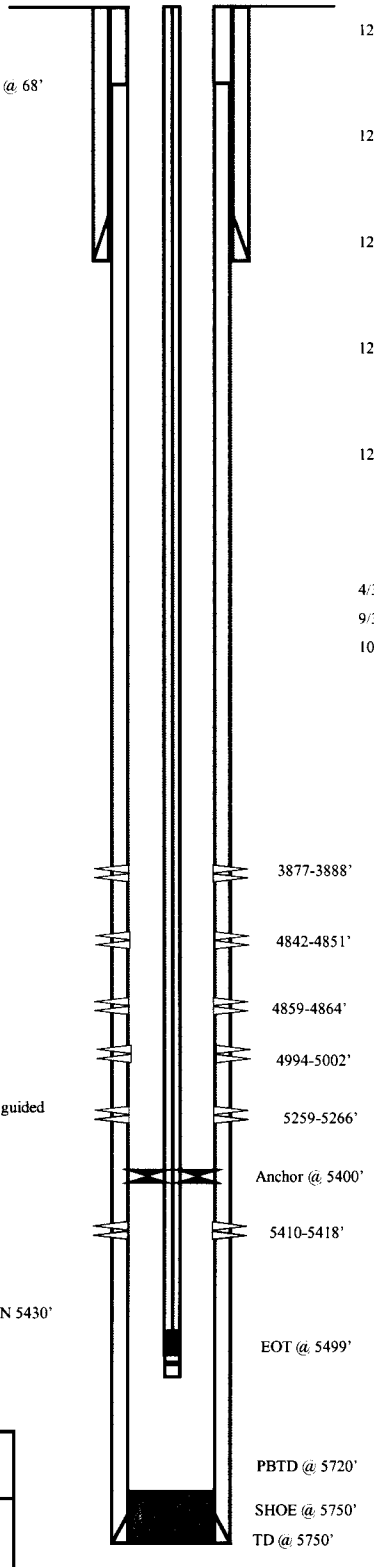

FRAC JOB

12/06/07	5410-5418'	**Frac CP3 sands as follows:** 25257# 20/40 sand in 361 bbls Lightning 17 frac fluid. Treated @ avg press of 2391 psi w/avg rate of 23.1 BPM. ISIP 2055 psi. Calc flush: 5408 gal. Actual flush: 4906 gal.
12/06/07	5259-5266'	**Frac CP.5 sands as follows:** 25324# 20/40 sand in 351 bbls Lightning 17 frac fluid. Treated @ avg press of 2677 psi w/avg rate of 23.1 BPM. ISIP 2035 psi. Calc flush: 5257 gal. Actual flush: 4754 gal.
12/06/07	4994-5002'	**Frac LODC sands as follows:** 25369# 20/40 sand in 354 bbls Lightning 17 frac fluid. Treated @ avg press of 3093 psi w/avg rate of 23.2 BPM. ISIP 3198 psi. Calc flush: 4992 gal. Actual flush: 4490 gal.
12/06/07	4842-4864'	**Frac A1 sands as follows:** 40223# 20/40 sand in 398 bbls Lightning 17 frac fluid. Treated @ avg press of 2114 psi w/avg rate of 23.1 BPM. ISIP 2132 psi. Calc flush: 4840 gal. Actual flush: 4326 gal.
12/06/07	3877-3888'	**Frac GB4 sands as follows:** 38701# 20/40 sand in 339 bbls Lightning 17 frac fluid. Treated @ avg press of 1497 psi w/avg rate of 23.2 BPM. ISIP 1632 psi. Calc flush: 3875 gal. Actual flush: 3822 gal.
4/3/09		Tubing Leak.Updated r & t details.
9/3/09		Tubing Leak. Updated rod & tubing details.
10/16/2010		Tubing Leak. Update rod and tubing details.

PERFORATION RECORD

11/29/07	5410-5418'	4 JSPF	32 holes
12/06/07	5259-5266'	4 JSPF	28 holes
12/06/07	4994-5002'	4 JSPF	32 holes
12/06/07	4859-4864'	4 JSPF	20 holes
12/06/07	4842-4851'	4 JSPF	36 holes
12/06/07	3877-3888'	4 JSPF	44 holes

NEWFIELD

FEDERAL 6-24-9-16
2039'FNL & 2046' FWL
SE/NW Section 24-T9S-R16E
Duchesne Co, Utah
API #43-013-32962; Lease # UTU-15855

CB 11/9/2010

ATTACHMENT E-6

FEDERAL 12A-24-9-16

Spud Date: 11/05/07
Put on Production: 01/26/08
GL: 5640' KB: 5652'

Wellbore Diagram

Initial Production: BOPD, MCFD, BWPD

SURFACE CASING

CSG SIZE: 8-5/8"
GRADE: J-55
WEIGHT: 24#
LENGTH: 7 jts. (306.37')
DEPTH LANDED: 318.22' KB
HOLE SIZE:12-1/4"
CEMENT DATA:1- 160, sxs Class "G" cmt, est 0 bbls cmt to surf.

FRAC JOB

01/22/2008 4806-4820' **Frac A1 sands as follows:** 70235# 20/40 sand in 570 bbls Lightning 17 frac fluid. Treated @ avg press of 1932 psi w/avg rate of 23.3 BPM. ISIP 2247 psi.

01/22/2008 3897-3938' **Frac GB6 sands as follows:** 64050# 20/40 sand in 507 bbl Lightning 17 frac fluid. Treated @ avg press of 1813 psi w/avg rate of 23.3 BPM. ISIP 1701 psi.

PRODUCTION CASING

CSG SIZE: 5-1/2"
GRADE: J-55
WEIGHT: 15.5#
LENGTH: 147 jts. (5692.63')
DEPTH LANDED: 5705.88' KB
HOLE SIZE: 7-7/8"
CEMENT DATA: 300 sxs Prem. Lite II mixed & 400 sxs 50/50 POZ.
CEMENT TOP: 112'

TUBING

SIZE/GRADE/WT.: 2-7/8" / J-55 / 6.5#
NO. OF JOINTS: 152 jts (4778.87')
TUBING ANCHOR: 4790.87' KB
NO. OF JOINTS: 1 jts (31.42')
SEATING NIPPLE: 2-7/8" (1.10')
SN LANDED AT: 4825.09' KB
NO. OF JOINTS: 2 jts (62.86')
TOTAL STRING LENGTH: EOT @ 4889.50' KB

SUCKER RODS

POLISHED ROD: 1-1/2" x 22' SM polished rods
SUCKER RODS: 1-2', 4', 8'x 3/4 " pony rods, 99-3/4" guided rods, 67-3/4" plain rods, 20-3/4" guided rods, 6-1 ½" weight rods.
PUMP SIZE: CDI 2-1/2" x 1-1/2" x 14' RHAC
STROKE LENGTH: 86"
PUMP SPEED, 5 SPM:

PERFORATION RECORD

4806-4820'	4 JSPF	56 holes
3931-3938'	4 JSPF	28 holes
3897-3905'	4 JSPF	32 holes

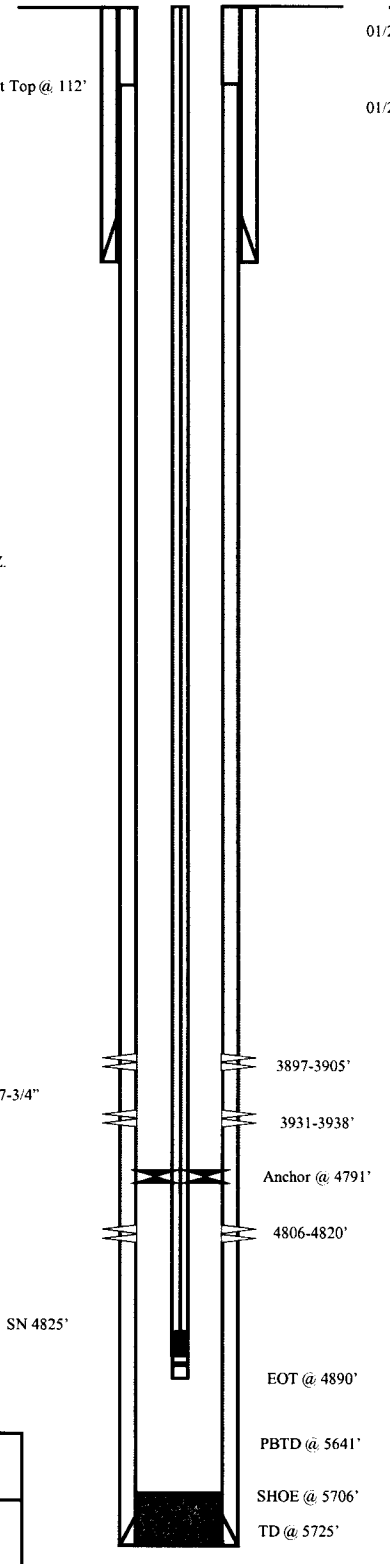

NEWFIELD

FEDERAL 12A-24-9-16

1951' FSL & 482' FWL

NW/SW Section 24-T9S-R16E

Duchesne Co, Utah

API #43-013-33341; Lease # UTU-15855

TW 04/07/08

ATTACHMENT E-7

Castle Peak Federal #7-23

Wellbore Diagram

Well History:

7-26-83	Spud Well
8-11-83	Perf: 4,872'-4,878', 4,890'-4,910'
	Frac A-3 zone as follows: Totals 38,000 gal, 130,800# 20/40 sd Max TP 2,600 @ 31 BPM Avg TP 2,000 @ 31 BPM ISIP 2,000, after 5 min 1,450

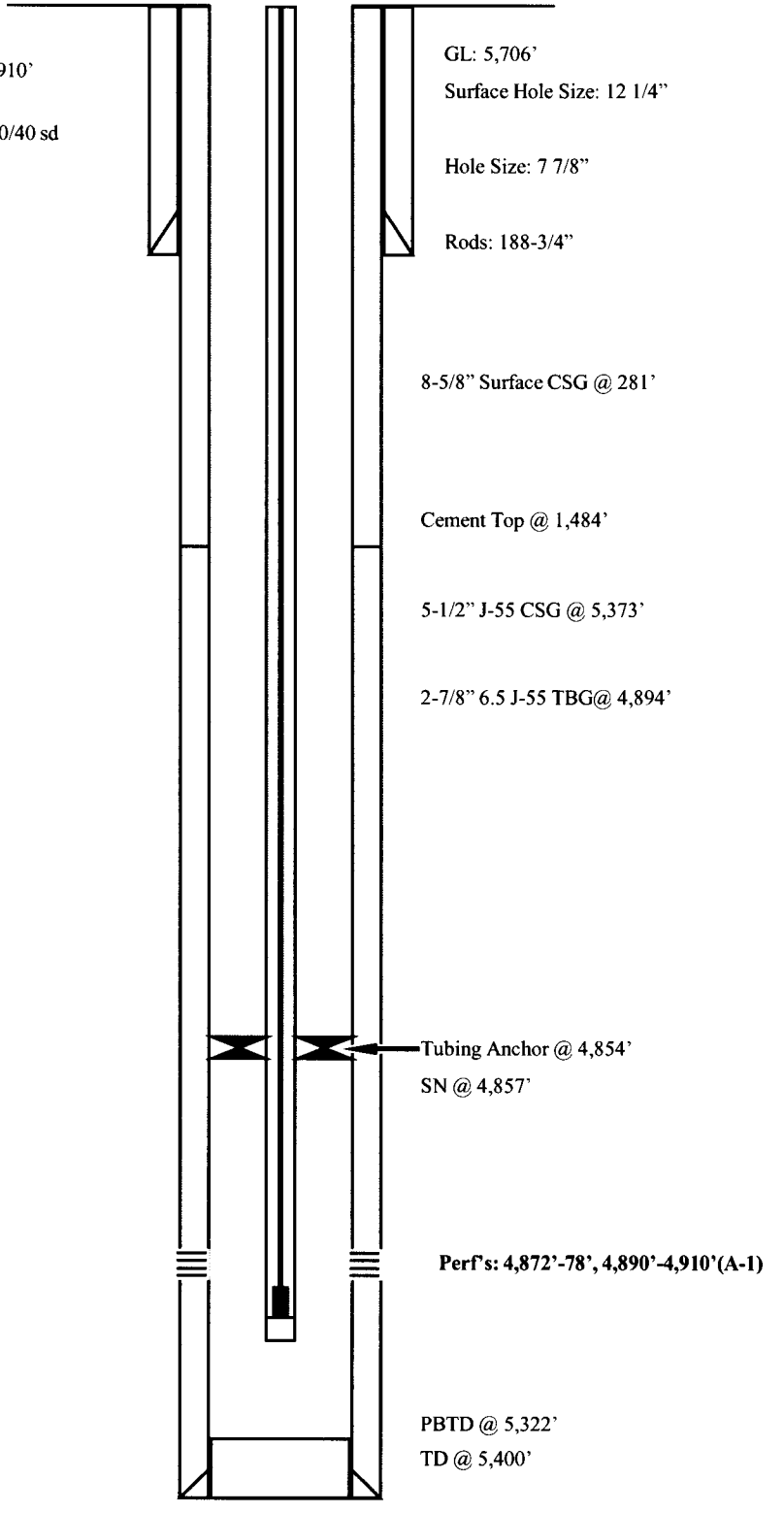

NEWFIELD

Castle Peak Federal #7-23
1967 FNL 1985 FEL
SWNE Section 23-T9S-R16E
Duchesne Co, Utah
API #43-013-30662; Lease #U-15855

ATTACHMENT E-8

Castle Peak Federal #9-23

Wellbore Diagram

Well History:

3-15-83	Spud Well
4-2-83	Perf: 4,808'-4,821'
4-5-83	Frac A-1 zone as follows: Totals 26,500 gal, 88,000# 20/40 sd Max TP 2,830 @ 30 BPM Avg TP 2,500 @ 30 BPM ISIP 2,080, after 5 min 1,990

GL: 5,663'

SURFACE CASING

CSG SIZE: 8-5/8"

WEIGHT: 24#

LENGTH: (271.06')

DEPTH LANDED: 270'GL

HOLE SIZE: 13"

CEMENT DATA: 210 sxs Class "G" with 2% CaCl and ¼# per sc celloflake.

PRODUCTION CASING

CSG SIZE: 5-1/2"

GRADE: J-55

WEIGHT: 17#

LENGTH: 133 jts.

DEPTH LANDED: 5405'

HOLE SIZE: 7-7/8"

CEMENT DATA: 200 sxs Hifill 275 sxs Thixotropic

CEMENT TOP AT: 3314'

TUBING

SIZE/GRADE/WT.: 2-7/8" / 6.5# / J-55

NO. OF JOINTS: 151 jts. (4778.19')

TUBING ANCHOR: 4802.19'

NO. OF JOINTS: 1 jts. (31.63')

SEATING NIPPLE: 2-7/8" (1.10')

SN LANDED AT: 4836.62'

NO. OF JOINTS: 1 jts. (31.62')

TOTAL STRING LENGTH: EOT @ 4869.59'

SUCKER RODS

POLISHED ROD: 1-1/2" x 22'

SUCKER RODS: 1- 2' x ¾" pony rods, 101- ¾" guided rods, 60- ¾" slick rods, 27- ¾" guided rods, 4- 1 ½" weight bars.

PUMP SIZE: RIH w/ 2-1/2" x 1-1/4" x 16' RHAC CDI pump

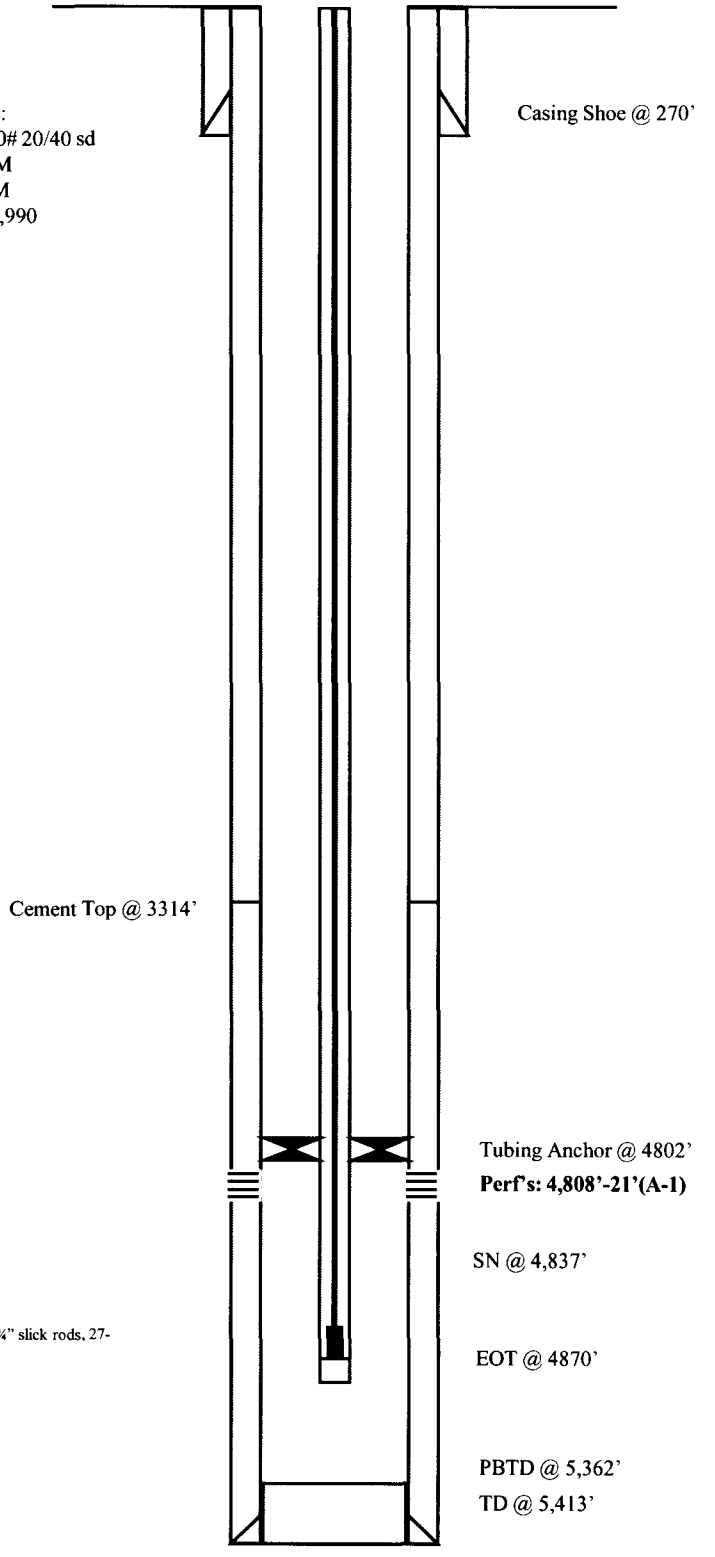

NEWFIELD

Castle Peak Federal #9-23
2080 FSL 659 FEL
NESE Section 23-T9S-R16E
Duchesne Co, Utah
API #43-013-30654; Lease #UTU-15855

Attachment E-9

Castle Peak Federal 12-24-9-16

Spud Date: 09/21/81

Put on Production: 11/07/81

GL: 5663' KB: '

SURFACE CASING

CSG SIZE: 8-5/8"

GRADE: J-55

WEIGHT: 24#

LENGTH: jts (294 ')

DEPTH LANDED: 294' KB

HOLE SIZE: 12-1/4"

CEMENT DATA: 200 sx Class "H"

PRODUCTION CASING

CSG SIZE: 5-1/2"

GRADE: J-55

WEIGHT: 15.5#

LENGTH: ? jts (')

DEPTH LANDED: 6019 '

HOLE SIZE: 7-7/8"

CEMENT DATA: 766 sx 50/50 Pozmix

CEMENT TOP AT: 2870'

TUBING

SIZE/GRADE/WT.: 2-7/8" / J-55 / 6.5#

NO. OF JOINTS: 126 jts (3842.4')

SEATING NIPPLE: 2-7/8" (1.10')

SN LANDED AT: 3854.4' KB

ON/OFF TOOL AT: 3855.5'

ARROW #1 PACKER CE AT: 3861.3'

XO 2-3/8 x 2-7/8 J-55 AT: 3864.3'

TBG PUP 2-3/8 J-55 AT: 3864.8'

X/N NIPPLE AT: 3869'

TOTAL STRING LENGTH: EOT @ 3871'

Injection Wellbore Diagram

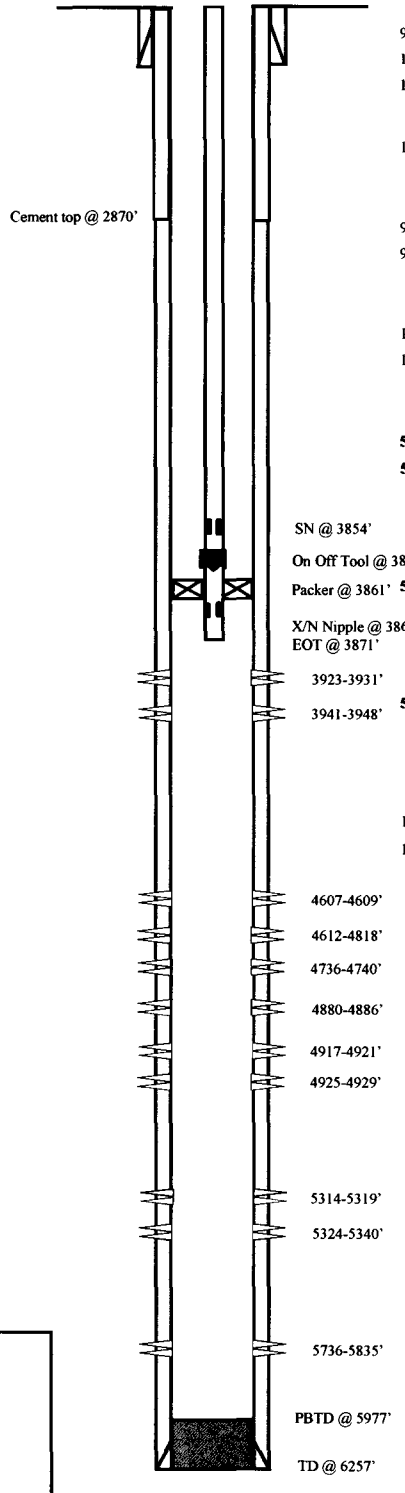

FRAC JOB

9-21-81		Spud Well
10-24-81		Perf: 5,736'-5,835'
10-30-82		Frac BGR zone as follows: Totals 3,000 gal, 2,000# sd Avg TP 2,300 ISIP 1,580, after 5 min 1,450
11-3-81		Perf: 5,324'-5,340', 5,314'-5,319' Frac CP-1 zone as follows: Totals 26,500 gal, 40,000# 20/40 sd 9,000# 10/20 sd ISIP 2,160, after 5 min 2,120
9-29-82		Perf: 4,607'-4,609', 4,612'-4,618'
9-30-82		Frac C-SD zone as follows: Totals 35,500 gal, 85,000# 20/40 sd Max TP 2,800 @ 30 BPM Avg TP 2,400 @ 30 BPM ISIP 2,000, after 5 min 1,750
10-5-82		Perf: 3,923'-3,931', 3,941'-3,948'
10-6-82		Frac GB-6 zone as follows: Totals 35,500 gal, 85,000# 20/40 sd Max TP 2,400 @ 30 BPM Avg TP 1,900 @ 30 BPM ISIP 1,700, after 5 min 1,575
5/11/2009		**Re-Completion**
5/11/2009	**5314-5340'**	**Frac stg#1 CP1 sds as follows:** 80,105# 20/40 sand in 740 bbls of Lightning 17 fluid. Treated @ ave pressure of 3498 w/ ave rate of 17 bpm w/ 6 ppg sand. ISIP was 2198 w/ .85FG. 5 minutes was 2145. 10 min was 2135. 15 min was 2126 (10 psi on casing).
5/11/2009	**4880-4929'**	**Frac A sds as follows:** 50,237# 20/40 sand in 488 bbls of Lightning 17 frac fluid. Treated @ ave pressure of 4470 w/ ave rate of 17.1 bpm w/ 6 ppg sand. ISIP was 1946 w/ .83FG. 5 minutes was 1919. 10 min was 1807. 15 min was 1734 (0 psi on casing).
5/11/2009	**4736-4740'**	**Frac B1 sds as follows:** 16,144# 20/40 sand in 208 bbls of Lightning 17 frac fluid. Treated @ ave pressure of 4147 w/ ave rate of 17.1 bpm w/ 6 ppg sand. ISIP was 2014 w/ .86FG. 5 minutes was 1646. 10 min was 1607. 15 min was 1586 (0 psi on casing).
11/21/12		**Convert to Injection Well**
11/27/12		**Conversion MIT Finalized** – update tbg detail

PERFORATION RECORD

5736-5835'	JSPF	holes	
5324-5340'	JSPF	holes	
5314-5319'	JSPF	holes	
4612-4618'	JSPF	holes	
4607-4609'	JSPF	holes	
3941-3948'	JSPF	holes	
3923-3931'	JSPF	holes	
4/20/09	5324-5340'	4 JSPF	64 holes
4/20/09	5314-5319'	4 JSPF	16 holes
4/20/09	4925-4929'	4 JSPF	16 holes
4/20/09	4917-4921'	4 JSPF	16 holes
4/20/09	4880-4886'	4 JSPF	16 holes
4/20/09	4736-4740'	4 JSPF	16 holes

NEWFIELD

Castle Peak Federal 12-24-9-16
749 FWL 1982 FNL
SWNW Section 24-T9S-R16E
Duchesne Co, Utah
API #43-013-30588; Lease #U-15855

LCN 11/29/12

ATTACHMENT E-10

Jonah Federal 16-14-9-16

Spud Date: 10-14-05

Put on Production: 11-14-05

GL: 5626' KB: 5638'

Injection Wellbore Diagram

SURFACE CASING

CSG SIZE: 8-5/8"

GRADE: J-55

WEIGHT: 24#

LENGTH: 7 jts (302.62')

DEPTH LANDED: 310.02' KB

HOLE SIZE:12-1/4"

CEMENT DATA: 160 sxs Class "G" cmt, est 4 bbls cmt to surf.

PRODUCTION CASING

CSG SIZE: 5-1/2"

GRADE: J-55

WEIGHT: 15.5#

LENGTH: 130 jts. (5790.42')

DEPTH LANDED: 5803.67' KB

HOLE SIZE: 7-7/8"

CEMENT DATA: 300 sxs Prem. Lite II mixed & 425 sxs 50/50 POZ.

CEMENT TOP AT: 270'

TUBING

SIZE/GRADE/WT.: 2-7/8" / J-55 / 6.5#

NO. OF JOINTS: 123 jts (3956.9')

SEATING NIPPLE: 2-7/8" (1.10')

SN LANDED AT: 3968.9' KB

ON/OFF TOOL AT: 3970.0'

ARROW #1 PACKER CE AT: 3975.9'

XO 2-3/8 x 2-7/8 J-55 AT: 3979.0'

TBG PUP 2-3/8 J-55 AT: 3979.5'

X/N NIPPLE AT: 3983.7'

TOTAL STRING LENGTH: EOT @ 3985.19'

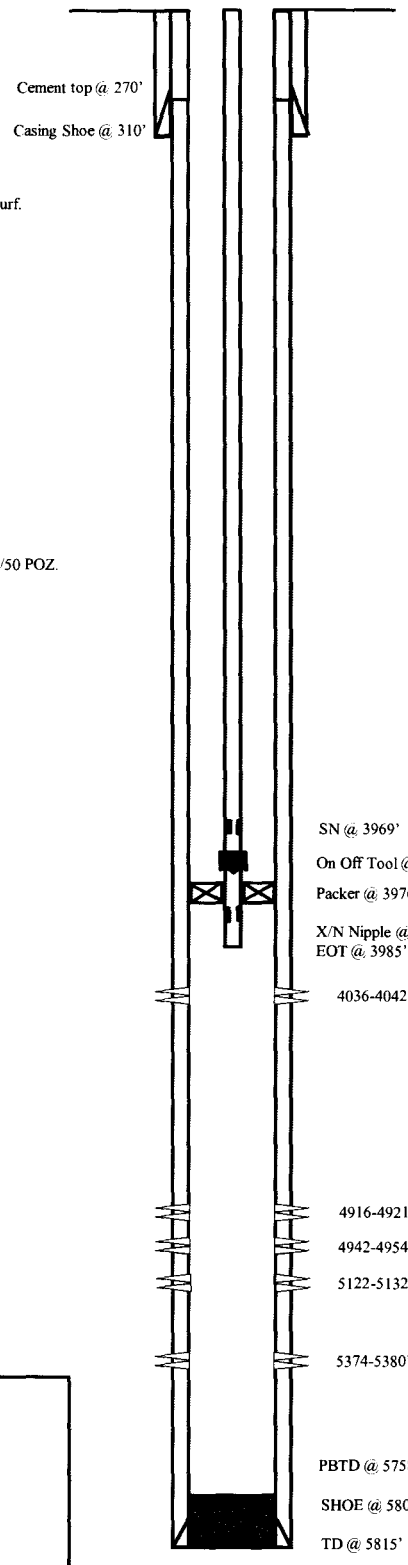

FRAC JOB

11-08-05	5374-5380'	**Frac CP2 sands as follows:** 24617# 20/40 sand in 360 bbls Lightning 17 frac fluid. Treated @ avg press of 2689 psi w/avg rate of 24.8 BPM. ISIP 3370 psi. Calc flush: 5372 gal. Actual flush: 4956 gal.
11-08-05	5122-5132'	**Frac LODC sands as follows:** 34329# 20/40 sand in 394 bbls Lightning 17 frac fluid. Treated @ avg press of 2632 psi w/avg rate of 24.8 BPM. ISIP 2720 psi. Calc flush: 5120 gal. Actual flush: 4830 gal.
11-09-05	4916-4954'	**Frac A1, & A3 sands as follows:** 75312# 20/40 sand in 591 bbls Lightning 17 frac fluid. Treated @ avg press of 1787 psi w/avg rate of 24.9 BPM. ISIP 2200 psi. Calc flush: 4914 gal. Actual flush: 3906 gal.
11-09-5	4036-4042'	**Frac GB6 sands as follows:** 25272# 20/40 sand in 301 bbls Lightning 17 frac fluid. Treated @ avg press of 2043 w/ avg rate of 24.7 BPM. ISIP 1830 psi. Calc flush: 4034 gal. Actual flush: 3948 gal.
6/8/09		**Pump Change**. Updated rod & tubing details.
12/19/12		**Convert to Injection Well**
12/20/12		**Conversion MIT Finalized** – update tbg detail

PERFORATION RECORD

11-01-05	5374-5380'	4 JSPF	24 holes
11-08-05	5122-5132'	4 JSPF	40 holes
11-08-05	4942-4954'	4 JSPF	48 holes
11-08-05	4916-4921'	4 JSPF	20 holes
11-09-05	4036-4042'	4 JSPF	24 holes

NEWFIELD

Jonah Federal 16-14-9-16

657' FSL & 758' FEL

SE/SE Section 14-T9S-R16E

Duchesne Co, Utah

API #43-013-32698; Lease #UTU-096547

LCN 01/04/13

ATTACHMENT

FEDERAL 1-23-9-16

Spud Date: 12/06/07
Put on Production: 02/11/08
GL: 5651' KB: 5663'

Wellbore Diagram

Initial Production: BOPD, MCFD, BWPD

SURFACE CASING

CSG SIZE: 8-5/8"
GRADE: J-55
WEIGHT: 24#
LENGTH: 7 jts (309.17')
DEPTH LANDED: 321'
HOLE SIZE: 12 ¼'
CEMENT DATA: To Surface w/160sx of class 'G' cement

PRODUCTION CASING

CSG SIZE: 5-1/2"
GRADE: J-55
WEIGHT: 15.5#
LENGTH: 5815'
DEPTH LANDED: 5784'
HOLE SIZE: 7-7/8
CEMENT DATA: 300 sx of Primlite II and 400 sx of 50/50 poz.
CEMENT TOP: 91'

TUBING

SIZE/GRADE/WT.: 2-7/8" / J-55 / 6.5#
NO. OF JOINTS: 170 jts (5430.4')
TUBING ANCHOR: 5442.' KB
NO. OF JOINTS: 1 jt (31.4')
SEATING NIPPLE: 2-7/8" (1.10')
SN LANDED AT: 5476.7' KB
NO. OF JOINTS: 2 jts (62.8')
TOTAL STRING LENGTH: EOT @ 5541' KB

SUCKER RODS

POLISHED ROD: 1-1/2" x 26' SM polished rods
SUCKER RODS: 1-2', 1-4' x ¾" pony rod, 2-8' x ¾" pony rods, 99- ¾" guided rods, 89- ¾" sucker rods, 20- ¾" guided rods, 6- 1 ½" sinker bars
PUMP SIZE: CDI 2-1/2" x 1-1/2" x 12' x 16' RHAC
STROKE LENGTH: 86"
PUMP SPEED: 5 SPM

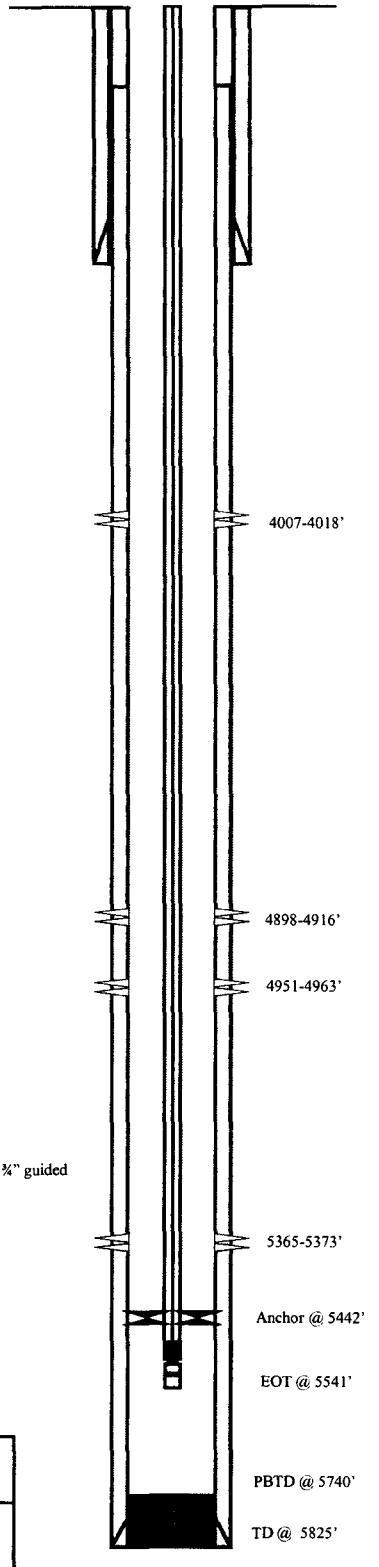

FRAC JOB

2/19/08 5365-5373
Frac CP1 sds w/ 22,746#'s of 20/40 sand in 347 bbls of Lightning 17 fluid. Broke @ 3471 psi. Pumped 780 gals of fresh wtr mixed with 30 gals of Techni-Hib 767W. Treated w/ ave pressure of 2152 psi @ ave rate of 23 BPM. Pumped 504 gals of 15% HCL in flush for Stage #2. ISIP 1913 psi.
Calc flush: ? Actual Flush: 4830 gals.

2/19/08 4898-4916
Frac A1 & A3 sds w/ 159,791#'s of 20/40 sand in 1105 bbls of Lightning 17 fluid. Broke @ 3520 psi. Pumped 780 gals of fresh wtr mixed with 30 gals of Techni-Hib 767W. Treated w/ ave pressure of 1790 psi @ ave rate of 23.2 BPM. Pumped 504 gals of 15% HCL in flush for Stage #3.
ISIP 2091 psi.
Calc Flush: ? Actual Flush: 4330 gals.

2/19/08 4951-4963
Frac A1 & A3 sds w/ 159,791#'s of 20/40 sand in 1105 bbls of Lightning 17 fluid. Broke @ 3520 psi. Pumped 780 gals of fresh wtr mixed with 30 gals of Techni-Hib 767W. Treated w/ ave pressure of 1790 psi @ ave rate of 23.2 BPM. Pumped 504 gals of 15% HCL in flush for Stage #3. ISIP 2091 psi.
Calc Flush: ? Actual Flush: 4330 gals.

2/19/08 4007-4018
Frac GB6 sds w/ 43,024#'s of 20/40 sand in 389 bbls of Lightning 17 fluid. Broke @ 3772 psi. Pumped 780 gals of fresh wtr mixed with 30 gals of Techni-Hib 767W. Treated w/ ave pressure of 1653 psi @ ave rate of 23.2 BPM. ISIP 1697 psi.
Calc flush:? Actual Flush: 3948 gals.

10/8/08 Pump change. Updated rod & tubing details.
2/1/2010 Pump change. Updated rod and tubing detail.
12/22/2010 Tubing Leak. Update rod and tubing detials
01/18/2011 Pump Change. Rods & tubing details updated.

PERFORATION RECORD

02/12/08	5365-5373	4 JSPF	32 holes
02/19/08	4951-4963	4 JSPF	48 holes
02/19/08	4898-4916	4 JSPF	72 holes
02/19/08	4007-4018	4 JSPF	44 holes

NEWFIELD

FEDERAL 1-23-9-16
632' FNL & 472' FEL
NE/NE Section 23-T9S-R16E
Duchesne Co, Utah
API #43-013-33002; Lease # U-15855

TW 09/08/11

NEWFIELD

GMBU C-23-9-16

Monument Butte - Duchesne County; Utah, USA

Surface Legal Location: SE/SW Section 14, T9S, R16E; 539' FSL & 1,695' FWL

Elevation: 5746' GL + 13' KB

API Number: 43-013-51682; Lease Number: UTU-096547

Sam Styles
PFM 1/21/14
Spud Date: 5/30/13
PoP Date: 7/12/2013

CASING DETAIL

Casing	Top	Bottom	Size	Wt.	Grade	Drift	Burst	Collapse	ID	gal/ft	Coupling	Hole
Surf	13'	303'	8-5/8"	24#	J-55	7.972"	2,950	1,370	8.097"	2.6749	STC	12.250
Prod	13'	6,143'	5-1/2"	15.5#	J-55	4.825"	4,810	4,040	4.950"	0.9997	LTC	7.875

TBG DETAIL

Top	Bottom	Coupling	Size	Wt.	Grade	Drift	Burst	Collapse	ID	Packer/Hanger
13'	5,727'	BEUE	2-7/8"	6.5#	J-55	2.347"	7,260	7,680	2.441"	Tubing Anchor Set @ 5,629'

ROD DETAIL

Component	Top	Bottom	Size	Grade	Length	Count
Polish Rod	0'	30'	1 1/2"	Spray Metal	30	1
Pony Rod	30'	50'	7/8"	Tenaris D78	20	1
4per Guided Rod	50'	1,800'	7/8"	Tenaris D78	1750	70
4per Guided Rod	1,800'	4,900'	3/4"	Tenaris D78	3100	124
8per Guided Rod	4,900'	5,650'	7/8"	Tenaris D78	750	30

Pump: Insert Pump: 2.5" Max ID x 1.75" Plunger RHAC @ 5650'.

Frac Summary

Stage	Top	Bottom	SPF	EHD	Date
4	4,155'	4,156'	2	0.34	7/1/2013
	4,163'	4,165'	2	0.34	7/1/2013
	4,170'	4,171'	2	0.34	7/1/2013
	4,210'	4,212'	2	0.34	7/1/2013
	4,214'	4,215'	2	0.34	7/1/2013
	4,225'	4,227'	2	0.34	7/1/2013
	4,246'	4,248'	2	0.34	7/1/2013
3	0'	0'	2	-	-
	4,713'	4,714'	2	0.34	7/1/2013
	4,716'	4,718'	2	0.34	7/1/2013
	4,722'	4,723'	2	0.34	7/1/2013
	4,729'	4,730'	2	0.34	7/1/2013
	4,733'	4,735'	2	0.34	7/1/2013
	4,803'	4,807'	2	0.34	7/1/2013
2	0'	0'	2	-	-
	0'	0'	2	-	-
	0'	0'	2	-	-
	0'	0'	2	-	-
	5,094'	5,097'	2	0.34	7/1/2013
	5,211'	5,213'	2	0.34	7/1/2013
	5,215'	5,218'	2	0.34	7/1/2013
1	0'	0'	3	-	-
	0'	0'	3	-	-
	0'	0'	3	-	-
	0'	0'	3	-	-
	0'	0'	3	-	-
	0'	0'	3	-	-
	5,633'	5,639'	3	0.34	7/1/2013

Stage	Formation		20/40 White	Slickwater	FG=	15% HCl	17# Delta 140	Load to Recover	Max STP
4	GB-6	GB-4	119,460 lbs	4,674 gals	0.870 psi/ft	0 gals	37,287 gals	41,961 gals	3,311 psi
3	D-3	D-1	85,200 lbs	5,320 gals	0.840 psi/ft	500 gals	24,902 gals	30,222 gals	2,799 psi
2	A-3	A-1	65,200 lbs	5,696 gals	0.810 psi/ft	500 gals	19,442 gals	25,638 gals	2,692 psi
1	CP-2		15,300 lbs	6,192 gals	0.770 psi/ft	750 gals	6,279 gals	13,221 gals	3,490 psi

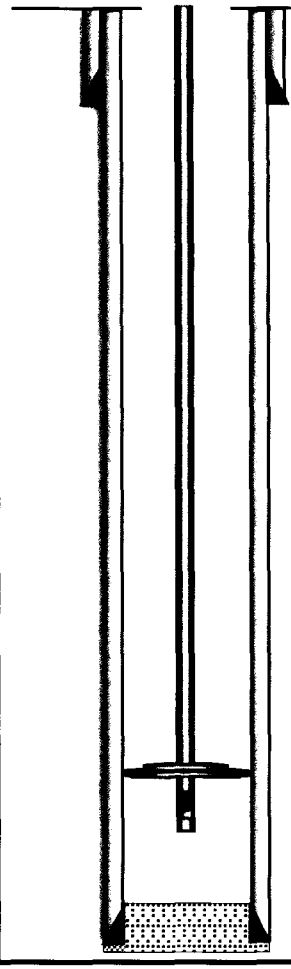

8-5/8"Shoe @ 303.24'

EOT @ 5727.01'; TA @ 5628.5'
5-1/2"Shoe @ 6142.95'
PBTD @ 6096'
TVD @ 5945'; MD @ 6,140'
BHST = 170°F

CEMENT

Surf	On 5/31/13 cement w/Pro Petro w/160 sks of class G+2%kcl+.25#CF mixed @ 15.8ppg and 1.17 yield. Returned 3 bbls to pit, bump plug to 600psi
Prod	On 6/19/13 cement production casing W/ 260 sx lead 11.0 ppg cement followed by 470 sx 14.4 ppg tail cement Bumped plug floats held. 25 bbls back to reserve pit. TOC @ 50'.

ATTACHMENT F

1 of 6

Multi-Chem Analytical Laboratory
1553 East Highway 40
Vernal, UT 84078

multi-chem
A HALLIBURTON SERVICE

Units of Measurement: **Standard**

Water Analysis Report

Production Company: **NEWFIELD PRODUCTION**
Well Name: **FEDERAL 8-23-9-16**
Sample Point: **Wellhead**
Sample Date: **6/17/2013**
Sample ID: **WA-245621**

Sales Rep: **Michael McBride**
Lab Tech: **Layne Wilkerson**

Scaling potential predicted using ScaleSoftPitzer from Brine Chemistry Consortium (Rice University)

Sample Specifics	
Test Date:	6/21/2013
System Temperature 1 (°F):	120
System Pressure 1 (psig):	60
System Temperature 2 (°F):	210
System Pressure 2 (psig):	60
Calculated Density (g/ml):	1.013
pH:	9.00
Calculated TDS (mg/L):	23210.67
CO2 in Gas (%):	
Dissolved CO_2 (mg/L)):	0.00
H_2S in Gas (%):	
H2S in Water (mg/L):	0.00

Analysis @ Properties in Sample Specifics			
Cations	*mg/L*	*Anions*	*mg/L*
Sodium (Na):	8656.21	Chloride (Cl):	12000.00
Potassium (K):	27.78	Sulfate (SO_4):	32.00
Magnesium (Mg):	10.44	Bicarbonate (HCO_3):	2440.00
Calcium (Ca):	13.50	Carbonate (CO_3):	
Strontium (Sr):	5.69	Acetic Acid (CH_3COO)	
Barium (Ba):	6.64	Propionic Acid (C_2H_5COO)	
Iron (Fe):	3.58	Butanoic Acid (C_3H_7COO)	
Zinc (Zn):	0.22	Isobutyric Acid ($(CH_3)_2CHCOO$)	
Lead (Pb):	0.00	Fluoride (F):	
Ammonia NH_3:		Bromine (Br):	
Manganese (Mn):	0.08	Silica (SiO_2):	14.53

Notes:
B=18.38

(PTB = Pounds per Thousand Barrels)

		Calcium Carbonate		Barium Sulfate		Iron Sulfide		Iron Carbonate		Gypsum CaSO4·2H2O		Celestite SrSO4		Halite NaCl		Zinc Sulfide	
Temp (°F)	PSI	SI	PTB	SI	PTB	SI	PTB	SI	PTB	SI	PTB	SI	PTB	SI	PTB	SI	PTB
210.00	60.00	1.82	11.63	0.00	0.00	0.00	0.00	3.22	2.60	0.00	0.00	0.00	0.00	0.00	0.00	0.00	0.00
200.00	60.00	1.78	11.61	0.02	0.15	0.00	0.00	3.19	2.60	0.00	0.00	0.00	0.00	0.00	0.00	0.00	0.00
190.00	60.00	1.74	11.59	0.04	0.32	0.00	0.00	3.15	2.60	0.00	0.00	0.00	0.00	0.00	0.00	0.00	0.00
180.00	60.00	1.70	11.57	0.07	0.51	0.00	0.00	3.11	2.60	0.00	0.00	0.00	0.00	0.00	0.00	0.00	0.00
170.00	60.00	1.67	11.55	0.10	0.72	0.00	0.00	3.07	2.60	0.00	0.00	0.00	0.00	0.00	0.00	0.00	0.00
160.00	60.00	1.63	11.52	0.13	0.95	0.00	0.00	3.03	2.60	0.00	0.00	0.00	0.00	0.00	0.00	0.00	0.00
150.00	60.00	1.60	11.50	0.18	1.19	0.00	0.00	2.98	2.60	0.00	0.00	0.00	0.00	0.00	0.00	0.00	0.00
140.00	60.00	1.57	11.48	0.22	1.44	0.00	0.00	2.94	2.60	0.00	0.00	0.00	0.00	0.00	0.00	0.00	0.00
130.00	60.00	1.54	11.45	0.27	1.70	0.00	0.00	2.89	2.60	0.00	0.00	0.00	0.00	0.00	0.00	0.00	0.00
120.00	60.00	1.51	11.43	0.33	1.96	0.00	0.00	2.84	2.60	0.00	0.00	0.00	0.00	0.00	0.00	0.00	0.00

Multi-Chem Analytical Laboratory
1553 East Highway 40
Vernal, UT 84078

multi-chem®
A HALLIBURTON SERVICE

Water Analysis Report

		Hemihydrate CaSO4~0.5H2O		Anhydrate CaSO4		Calcium Fluoride		Zinc Carbonate		Lead Sulfide		Mg Silicate		Ca Mg Silicate		Fe Silicate	
Temp (°F)	PSI	SI	PTB	SI	PTB	SI	PTB	SI	PTB	SI	PTB	SI	PTB	SI	PTB	SI	PTB
210.00	60.00	0.00	0.00	0.00	0.00	0.00	0.00	2.00	0.15	0.00	0.00	8.04	17.60	3.88	9.08	13.11	2.78
200.00	60.00	0.00	0.00	0.00	0.00	0.00	0.00	1.93	0.15	0.00	0.00	7.70	17.59	3.69	9.06	12.89	2.78
190.00	60.00	0.00	0.00	0.00	0.00	0.00	0.00	1.86	0.15	0.00	0.00	7.35	17.57	3.50	9.02	12.67	2.78
180.00	60.00	0.00	0.00	0.00	0.00	0.00	0.00	1.78	0.15	0.00	0.00	7.00	17.55	3.31	8.98	12.45	2.78
170.00	60.00	0.00	0.00	0.00	0.00	0.00	0.00	1.70	0.14	0.00	0.00	6.64	17.51	3.11	8.92	12.22	2.78
160.00	60.00	0.00	0.00	0.00	0.00	0.00	0.00	1.61	0.14	0.00	0.00	6.27	17.45	2.91	8.85	12.00	2.78
150.00	60.00	0.00	0.00	0.00	0.00	0.00	0.00	1.52	0.14	0.00	0.00	5.90	17.37	2.71	8.76	11.78	2.78
140.00	60.00	0.00	0.00	0.00	0.00	0.00	0.00	1.42	0.14	0.00	0.00	5.53	17.24	2.51	8.64	11.55	2.78
130.00	60.00	0.00	0.00	0.00	0.00	0.00	0.00	1.32	0.14	0.00	0.00	5.15	17.07	2.31	8.49	11.33	2.78
120.00	60.00	0.00	0.00	0.00	0.00	0.00	0.00	1.20	0.14	0.00	0.00	4.77	16.82	2.11	8.29	11.11	2.78

These scales have positive scaling potential under initial temperature and pressure: Calcium Carbonate Iron Carbonate Zinc Carbonate Mg Silicate Ca Mg Silicate Fe Silicate

These scales have positive scaling potential under final temperature and pressure: Calcium Carbonate Barium Sulfate Iron Carbonate Zinc Carbonate Mg Silicate Ca Mg Silicate Fe Silicate

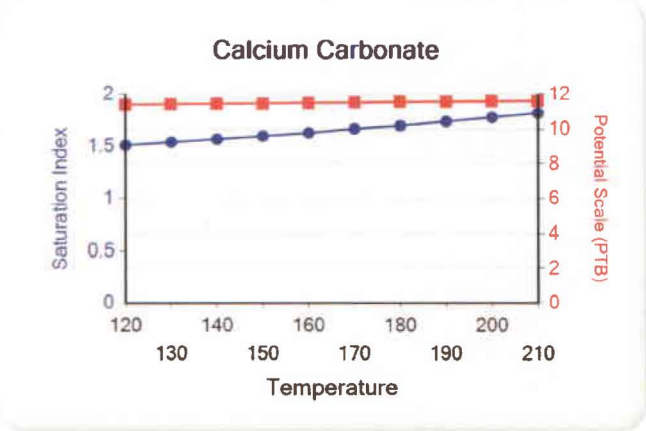

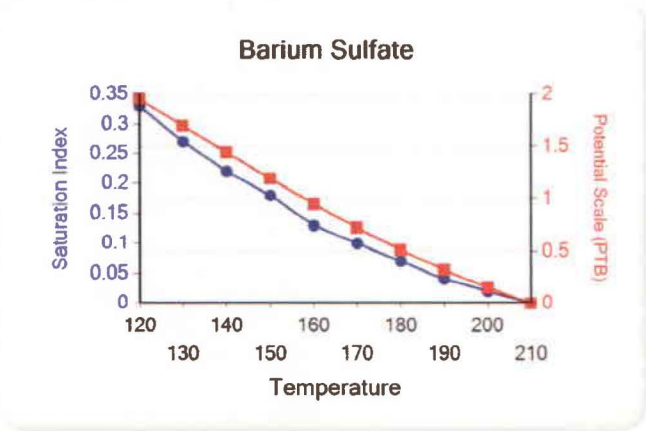

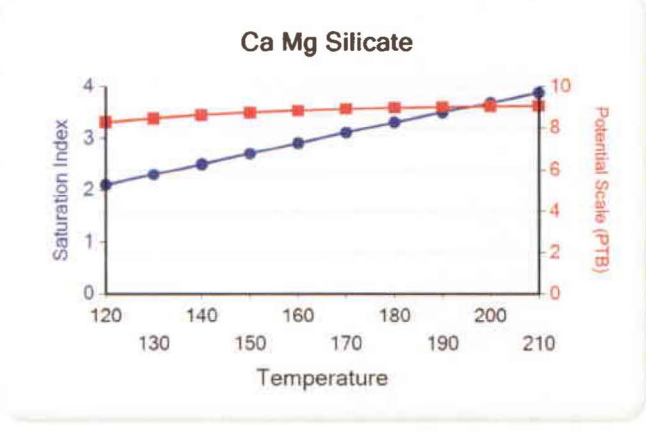

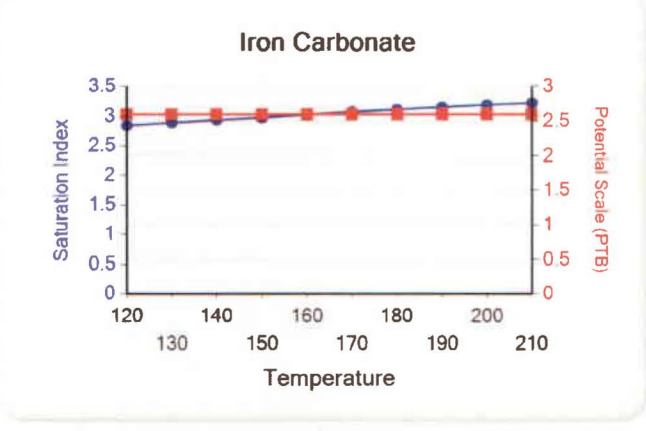

Multi-Chem Analytical Laboratory
1553 East Highway 40
Vernal, UT 84078

multi-chem
A HALLIBURTON SERVICE

Water Analysis Report

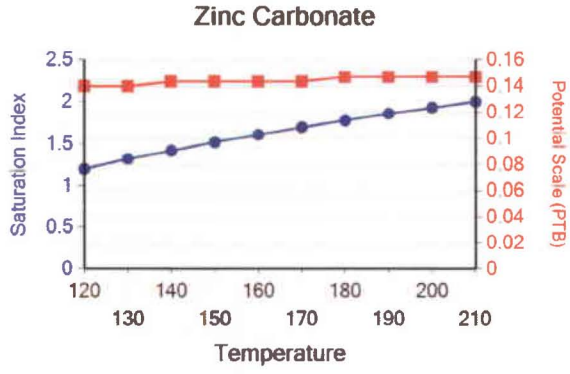

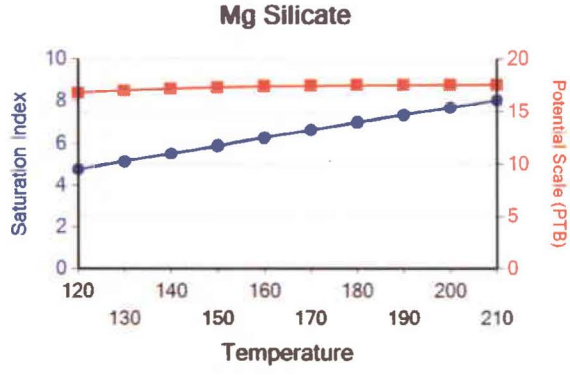

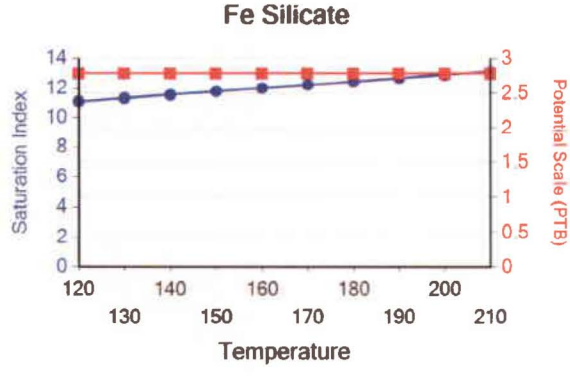

ATTACHMENT F

4 of 6

multi-chem®
A HALLIBURTON SERVICE

Multi-Chem Analytical Laboratory
1553 East Highway 40
Vernal, UT 84078

Units of Measurement: **Standard**

Water Analysis Report

Production Company: **NEWFIELD PRODUCTION**
Well Name: **BELUGA INJECTION**
Sample Point: **After Filters**
Sample Date: **11/28/2012**
Sample ID: **WA-228948**

Sales Rep: **Michael McBride**
Lab Tech: **Gary Peterson**

Scaling potential predicted using ScaleSoftPitzer from Brine Chemistry Consortium (Rice University)

Sample Specifics	
Test Date:	12/5/2012
System Temperature 1 (°F):	120.00
System Pressure 1 (psig):	60.0000
System Temperature 2 (°F):	210.00
System Pressure 2 (psig):	60.0000
Calculated Density (g/ml):	1.003
pH:	7.40
Calculated TDS (mg/L):	7933.86
CO2 in Gas (%):	
Dissolved CO2 (mg/L)):	13.00
H2S in Gas (%):	
H2S in Water (mg/L):	7.00

Analysis @ Properties in Sample Specifics			
Cations	*mg/L*	*Anions*	*mg/L*
Sodium (Na):	2814.83	Chloride (Cl):	4000.00
Potassium (K):	20.00	Sulfate (SO_4):	460.00
Magnesium (Mg):	47.00	Bicarbonate (HCO_3):	512.00
Calcium (Ca):	79.00	Carbonate (CO_3):	
Strontium (Sr):		Acetic Acid (CH_3COO)	
Barium (Ba):	0.14	Propionic Acid (C_2H_5COO)	
Iron (Fe):	0.17	Butanoic Acid (C_3H_7COO)	
Zinc (Zn):	0.02	Isobutyric Acid ($(CH_3)_2CHCOO$)	
Lead (Pb):	0.00	Fluoride (F):	
Ammonia NH_3:		Bromine (Br):	
Manganese (Mn):	0.70	Silica (SiO_2):	

Notes:
11:30

(PTB = Pounds per Thousand Barrels)

		Calcium Carbonate		Barium Sulfate		Iron Sulfide		Iron Carbonate		Gypsum CaSO4·2H2O		Celestite SrSO4		Halite NaCl		Zinc Sulfide	
Temp (°F)	PSI	SI	PTB	SI	PTB	SI	PTB	SI	PTB	SI	PTB	SI	PTB	SI	PTB	SI	PTB
210.00	60.00	0.96	36.46	0.00	0.00	1.15	0.09	0.30	0.06	0.00	0.00	0.00	0.00	0.00	0.00	7.08	0.01
200.00	60.00	0.89	33.50	0.00	0.00	1.11	0.09	0.22	0.05	0.00	0.00	0.00	0.00	0.00	0.00	7.13	0.01
190.00	60.00	0.81	30.53	0.00	0.00	1.06	0.08	0.15	0.04	0.00	0.00	0.00	0.00	0.00	0.00	7.19	0.01
180.00	60.00	0.73	27.58	0.00	0.00	1.03	0.08	0.07	0.02	0.00	0.00	0.00	0.00	0.00	0.00	7.25	0.01
170.00	60.00	0.66	24.68	0.02	0.00	0.99	0.08	0.00	0.00	0.00	0.00	0.00	0.00	0.00	0.00	7.32	0.01
160.00	60.00	0.59	21.85	0.05	0.01	0.97	0.08	0.00	0.00	0.00	0.00	0.00	0.00	0.00	0.00	7.40	0.01
150.00	60.00	0.52	19.12	0.08	0.01	0.95	0.08	0.00	0.00	0.00	0.00	0.00	0.00	0.00	0.00	7.48	0.01
140.00	60.00	0.45	16.50	0.12	0.02	0.93	0.08	0.00	0.00	0.00	0.00	0.00	0.00	0.00	0.00	7.57	0.01
130.00	60.00	0.39	14.02	0.17	0.03	0.93	0.08	0.00	0.00	0.00	0.00	0.00	0.00	0.00	0.00	7.67	0.01
120.00	60.00	0.33	11.69	0.23	0.04	0.93	0.08	0.00	0.00	0.00	0.00	0.00	0.00	0.00	0.00	7.79	0.01

ATTACHMENT F

5 of 6

Multi-Chem Analytical Laboratory
1553 East Highway 40
Vernal, UT 84078

multi-chem
A HALLIBURTON SERVICE

Water Analysis Report

		Hemihydrate CaSO4~0.5H2O		Anhydrate CaSO4		Calcium Fluoride		Zinc Carbonate		Lead Sulfide		Mg Silicate		Ca Mg Silicate		Fe Silicate	
Temp (°F)	PSI	SI	PTB	SI	PTB	SI	PTB	SI	PTB	SI	PTB	SI	PTB	SI	PTB	SI	PTB
210.00	60.00	0.00	0.00	0.00	0.00	0.00	0.00	0.00	0.00	0.00	0.00	0.00	0.00	0.00	0.00	0.00	0.00
200.00	60.00	0.00	0.00	0.00	0.00	0.00	0.00	0.00	0.00	0.00	0.00	0.00	0.00	0.00	0.00	0.00	0.00
190.00	60.00	0.00	0.00	0.00	0.00	0.00	0.00	0.00	0.00	0.00	0.00	0.00	0.00	0.00	0.00	0.00	0.00
180.00	60.00	0.00	0.00	0.00	0.00	0.00	0.00	0.00	0.00	0.00	0.00	0.00	0.00	0.00	0.00	0.00	0.00
170.00	60.00	0.00	0.00	0.00	0.00	0.00	0.00	0.00	0.00	0.00	0.00	0.00	0.00	0.00	0.00	0.00	0.00
160.00	60.00	0.00	0.00	0.00	0.00	0.00	0.00	0.00	0.00	0.00	0.00	0.00	0.00	0.00	0.00	0.00	0.00
150.00	60.00	0.00	0.00	0.00	0.00	0.00	0.00	0.00	0.00	0.00	0.00	0.00	0.00	0.00	0.00	0.00	0.00
140.00	60.00	0.00	0.00	0.00	0.00	0.00	0.00	0.00	0.00	0.00	0.00	0.00	0.00	0.00	0.00	0.00	0.00
130.00	60.00	0.00	0.00	0.00	0.00	0.00	0.00	0.00	0.00	0.00	0.00	0.00	0.00	0.00	0.00	0.00	0.00
120.00	60.00	0.00	0.00	0.00	0.00	0.00	0.00	0.00	0.00	0.00	0.00	0.00	0.00	0.00	0.00	0.00	0.00

These scales have positive scaling potential under initial temperature and pressure: Calcium Carbonate Iron Sulfide Iron Carbonate Zinc Sulfide

These scales have positive scaling potential under final temperature and pressure: Calcium Carbonate Barium Sulfate Iron Sulfide Zinc Sulfide

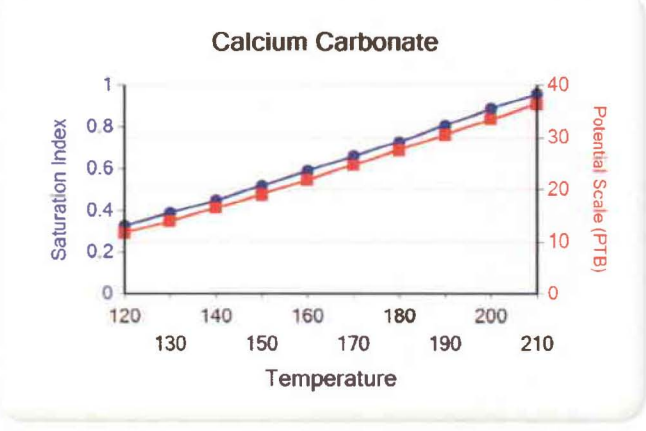

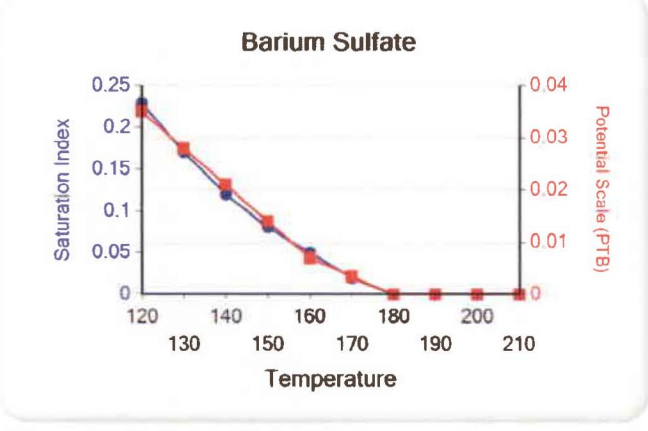

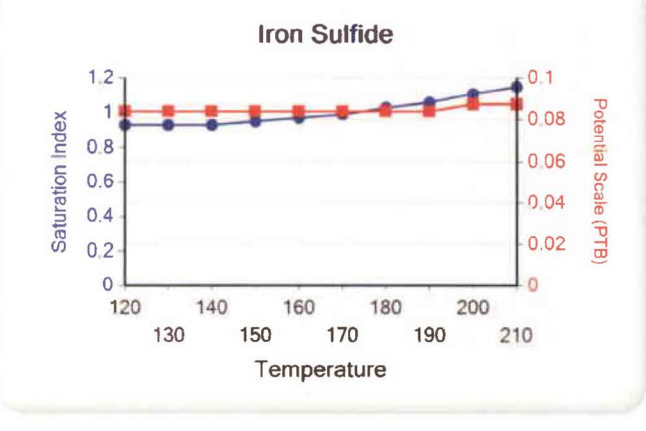

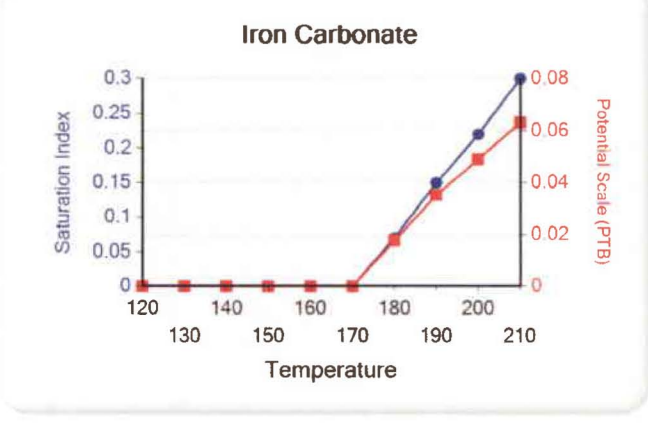

Multi-Chem Analytical Laboratory
1553 East Highway 40
Vernal, UT 84078

multi-chem
A HALLIBURTON SERVICE

Water Analysis Report

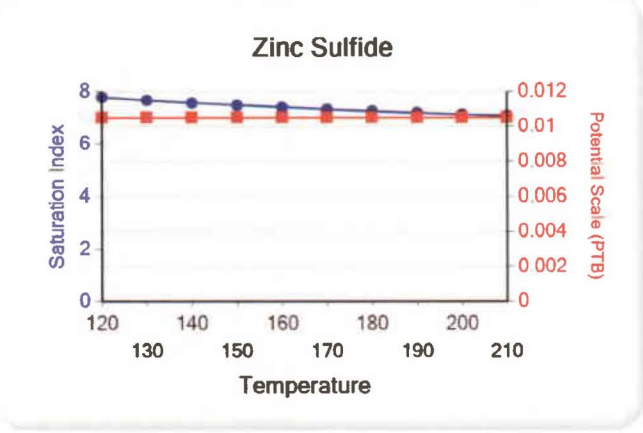

Attachment "G"

Federal #8-23-9-16
Proposed Maximum Injection Pressure

Frac Interval (feet) Top	Bottom	Avg. Depth (feet)	ISIP (psi)	Calculated Frac Gradient (psi/ft)	Pmax
4885	4951	4918	2249	0.89	2217
4725	4733	4729	1943	0.84	1912
4454	4463	4459	1971	0.88	1942
5000	5052	5026	1702	0.77	1670 ←
				Minimum	1670

Calculation of Maximum Surface Injection Pressure
Pmax = (Frac Grad -(0.433*1.015)) x Depth of Top Perf
where pressure gradient for the fresh water is .433 psi/ft and
specific gravity of the injected water is 1.015.

Frac Gradient = (ISIP +(0.433*Top Perf.))/Top Perf.

Please note: These are existing perforations; additional perforations may be added during the actual conversion procedure.

ATTACHMENT G-1

Daily Activity Report

Format For Sundry

FEDERAL 8-23-9-16

12/1/2007 To 4/29/2008

2/7/2008 Day: 1 **Completion**

Rigless on 2/6/2008 - Install 5M frac head. NU 6" 5M Cameron BOP. RU H/O truck & pressure test casing, blind rams, frac head & casing valves to 4500 psi. RU Perforators LLC WLT w/ mast & run CBL under pressure. WLTD @ 5705' & cement top @ 80'. Perforate stage #1. A3 sds @ 4939- 51', A1 sds @ 4885- 4902' w/ 3 1/8" slick guns (19 gram, .49" HE, 120°, 21.92" pen, EXP-3319-331 Titan) w/ 4 spf for total of 116 shots. 137 BWTR. SIFN.

2/13/2008 Day: 2 **Completion**

Rigless on 2/12/2008 - RU BJ Services "Ram Head" frac flange. RU BJ & frac A sds, stage #1 down casing w/ 135,331#'s of 20/40 sand in 1006 bbls of Lightning 17 frac fluid. Open well w/ 0 psi on casing (took 45 bbls to load casing). Perfs broke down @ 1902 psi. Pump 30 gal of Techna Hib chemical. Treated @ ave pressure of 2046 w/ ave rate of 23.4 bpm w/ 8 ppg of sand. Spot 12 bbls of 15% HCL acid in flush for next stage. 1143 bbls EWTR. ISIP was 2249. Leave pressure on well. RU Lone Wolf WLT, crane & lubricator. RIH w/ Weatherford 5-1/2" (6K) composite flow through frac plug & 8' perf gun. Set plug @ 4820'. Perforate B1 sds @ 4725-33' w/ 3-1/8" Slick Guns (23 gram, .43"HE, 90°) w/ 4 spf for total of 32 shots. RU BJ & perfs won't break down. RIH & spot 10 gals of 15% HCL acid on perfs. RU BJ & frac stage #2 w/ 31,069#'s of 20/40 sand in 395 bbls of Lightning 17 frac fluid. Open well w/ 1090 psi on casing. Perfs broke down @ 2948 psi. Pump 30 gal of Techna Hib chemical. Treated @ ave pressure of 1821 w/ ave rate of 23.4 bpm w/ 6.5 ppg of sand. Spot 12 bbls of 15% HCL acid in flush for next stage. 1538 bbls EWTR. ISIP was 1943. Leave pressure on well. RU WLT. RIH w/ frac plug & 9' perf gun. Set plug @ 4560'. Perforate D1 sds @ 4454-63' w/ 4 spf for total of 36 shots. RU BJ & frac stage #3 w/ 45,231#'s of 20/40 sand in 429 bbls of Lightning 17 frac fluid. Open well w/ 1580 psi on casing. Perfs broke down @ 2331 psi. Pump 30 gal of Techna Hib chemical. Treated @ ave pressure of 1900 w/ ave rate of 23.4 bpm w/ 8 ppg of sand. Spot 12 bbls of 15% HCL acid in flush for next stage. 1967 bbls EWTR. ISIP was 1971. Leave pressure on well. RU WLT. RIH w/ frac plug & 9' perf gun. Set plug @ 4130'. Perforate GB6 sds @ 4015-24' w/ 4 spf for total of 36 shots. RU BJ & frac stage #4 w/ 39,181#'s of 20/40 sand in 403 bbls of Lightning 17 frac fluid. Open well w/ 1712 psi on casing. Perfs broke down @ 3410 psi. Pump 30 gal of Techna Hib chemical. Treated @ ave pressure of 1813 w/ ave rate of 23.4 bpm w/ 8 ppg of sand. 2370 bbls EWTR. ISIP was 1702. RD BJ & WLT. Flow well back. Well flowed for 4 hours & died w/ 300 bbls rec'd. SIFN.

2/14/2008 Day: 3 **Completion**

Western #4 on 2/13/2008 - MIRUSU. Thaw well out. Open well w/ 220 psi on casing. RD Cameron BOP's & 5K frac head. Instal 3K production tbg head & Schaefer BOP's. RU 4-3/4" Chomp bit (new) & bit sub. Tally & pickup of trailer (used) J-55, 6.5#, 2-7/8" tbg. TIH w/ 128 jts to tag fill @ 4035'. C/O to plug @ 4130'. RU swivel, pump & tanks. Drlg out plug #1. TIH w/ tbg to tag fill @ 4488'. C/O sand to plug @ 4560'. Drlg out plug #2. TIH w/ tbg to tag plug @ 4820'. Drlg out plug #3. TIH w/ tbg to tag sand @ 5577'. C/O to PBTD @ 5738'. SIFN.

2/15/2008 Day: 4 **Completion**

Western #4 on 2/14/2008 - MIRUSU. Thaw well out. Open well w/ vacuum psi on casing. RU swab equipment. IFL was 450'. Made 4 runs to rec's 45 bbls fluid. FFL was 800'. SIFN.

2/16/2008 Day: 5 **Completion**

Western #4 on 2/15/2008 - MIRUSU. Thaw well out. Open well w/ vacuum psi on casing. RU swab equipment. IFL was 900'. Made 16 runs to rec'd 140 bbls fluid. FFL was 2300' w/ last run shows no sand & trace of oil. RD swab. TIH w/ tbg to tag 5' of new sand. Circulate well clean to PBTD @

5738'. TOOH w/ tbg. LD bit & bit sub. TIH w/ production string, NC, 2 jts tbg, SN, 2 jts tbg, TA (new) CDI w/ 45,000# shear, 155 jts tbg. RD BOP's. Set TA @ 4907' in 16,000#'s tension w/ SN @ 4775' & EOT @ 5040'. Flush tbg w/ 60 bbls water. Well drinking water. SIFN.

2/19/2008 Day: 6 **Completion**

Western #4 on 2/18/2008 - Tbg on vacuum. PU & prime up CDI rod pump. PU & RIH w/ "B" grade rods as follows: CDI 2 1/2" X 1 1/2" X 15' RHAC, 6- 1 1/2" wt bars, 20- 3/4" guided rods, 72- 3/4" plain rods, 100- 3/4" guided rods, 1- 2', 1- 8' X 3/4" pony rods, 1 1/2" X 22' polish rod. Hang head, Space out rods. Fill tbg w/ 6 bbls of wtr. Stroke test w/ unit to 800 psi. RDMOSU. POP @ 2:00 PM w/ 86" SL @ 5 SPM. 2076 BWTR. FINAL REPORT!!!

Pertinent Files: Go to File List

ATTACHMENT H

WORK PROCEDURE FOR PLUGGING AND ABANDONMENT

1.		Set CIBP @ 3965'
2.	Plug #1	Set 100' plug on top of CIBP using 12 sx Class "G" cement
3.	Plug #2	174' balance plug using 22 sx Class "G" cement 50' above Trona-Bird's Nest extending 50' below base of Mahogany Oil Shale
4.	Plug #3	120' balance plug using 14sx Class "G" cement 60' above Uinta/Green River and extending 60' below
5.	Plug #4	Pump 42 sx Class "G" cement down 5 ½" casing to 364'

The approximate cost to plug and abandon this well is $42,000.

ATTACHMENT H-1

FEDERAL 8-23-9-16

Spud Date: 12/13/07
Put on Production: 02/18/08
GL: 5685' KB: 5697'

Initial Production: BOPD, MCFD, BWPD

Proposed P & A
Wellbore Diagram

SURFACE CASING

CSG SIZE: 8-5/8"
GRADE: J-55
WEIGHT: 24#
LENGTH: 7 jts. (302.37')
DEPTH LANDED: 314.22' KB
HOLE SIZE:12-1/4"
CEMENT DATA:1- 160, sxs Class "G" cmt, est 4 bbls cmt to surf.

PRODUCTION CASING

CSG SIZE: 5-1/2"
GRADE: J-55
WEIGHT: 15.5#
LENGTH: 134 jts. (5785.67')
DEPTH LANDED: 5797.92' KB
HOLE SIZE: 7-7/8"
CEMENT DATA: 300 sxs Prem. Lite II mixed & 400 sxs 50/50 POZ.
CEMENT TOP: 80'

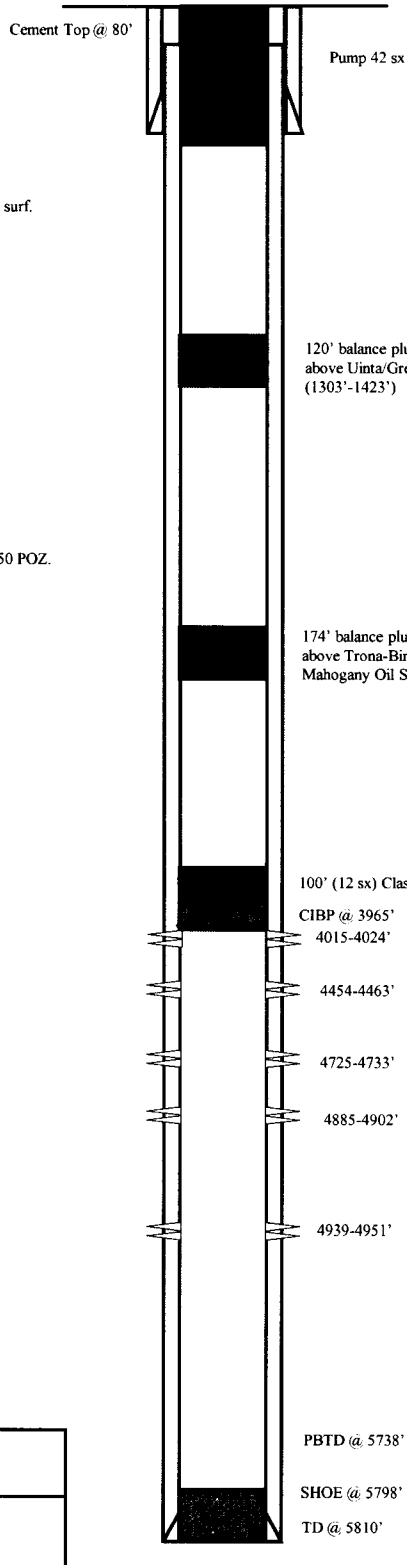

NEWFIELD

FEDERAL 8-23-9-16

1891' FNL & 535' FEL

SE/NE Section 23-T9S-R16E

Duchesne Co, Utah

API #43-013-32961; Lease # UTU-15855

JL 11/26/2013