NEWFIELD

November 22, 2005

State of Utah
Division of Oil, Gas & Mining
Attn: Diana Whitney
1594 West North Temple - Suite 1210
P.O. Box 145801
Salt Lake City, Utah 84114-5801

RE: Applications for Permit to Drill: Federal 2-22-9-16, 8-22-9-16, 5-23-9-16, 8-23-9-16, 6-24-9-16, and Sundance Federal 12-1-9-17.

Dear Diana:

Enclosed find APD's on the above referenced wells. The proposed 8-22-9-16 is an Exception Location. Our Land Department will send you the required Exception Location Letter. If you have any questions, feel free to give either Shon Mckinnon or myself a call.

Sincerely,

Mandie Crozier

Mandie Crozier
Regulatory Specialist

mc
enclosures

RECEIVED
NOV 2 3 2005
DIV. OF OIL, GAS & MINING

Newfield Exploration Company 10530 South Country Road #33 Myton, UT 84052 (435) 646-3721 Fax (435) 646-3031

Form 3160-3
(September 2001)

FORM APPROVED
OMB No. 1004-0136
Expires January 31, 2004

UNITED STATES
DEPARTMENT OF THE INTERIOR
BUREAU OF LAND MANAGEMENT

APPLICATION FOR PERMIT TO DRILL OR REENTER

5. Lease Serial No.
UTU-64379

6. If Indian, Allottee or Tribe Name
N/A

7. If Unit or CA Agreement, Name and No.
N/A

8. Lease Name and Well No.
Federal 8-22-9-16

1a. Type of Work: [x] DRILL [ ] REENTER

1b. Type of Well: [x] Oil Well [ ] Gas Well [ ] Other [x] Single Zone [ ] Multiple Zone

2. Name of Operator
Newfield Production Company

9. API Well No.
43-013-32959

3a. Address
Route #3 Box 3630, Myton UT 84052

3b. Phone No. *(include area code)*
(435) 646-3721

10. Field and Pool, or Exploratory
Monument Butte

4. Location of Well *(Report location clearly and in accordance with any State requirements.*)*
At surface SE/NE 2200' FNL 618' FEL 577007X 40.01754
At proposed prod. zone 4429884Y -110.09765

11. Sec., T., R., M., or Blk. and Survey or Area
SE/NE Sec. 22, T9S R16E

14. Distance in miles and direction from nearest town or post office*
Approximatley 18.9 miles southwest of Myton, Utah

12. County or Parish
Duchesne

13. State
UT

15. Distance from proposed* location to nearest property or lease line, ft. (Also to nearest drig. unit line, if any) Approx. 618' f/lse, NA' f/unit

16. No. of Acres in lease
1626.36

17. Spacing Unit dedicated to this well
40 Acres

18. Distance from proposed location* to nearest well, drilling, completed, applied for, on this lease, ft. Approx. 1582'

19. Proposed Depth
5850'

20. BLM/BIA Bond No. on file
UT0056

21. Elevations (Show whether DF, KDB, RT, GL, etc.)
5779' GL

22. Approximate date work will start*
1st Quarter 2006

23. Estimated duration
Approximately seven (7) days from spud to rig release.

24. Attachments

The following, completed in accordance with the requirements of Onshore Oil and Gas Order No.1, shall be attached to this form:

1. Well plat certified by a registered surveyor.
2. A Drilling Plan.
3. A Surface Use Plan (if the location is on National Forest System Lands, the SUPO shall be filed with the appropriate Forest Service Office).
4. Bond to cover the operations unless covered by an existing bond on file (see Item 20 above).
5. Operator certification.
6. Such other site specific information and/or plans as may be required by the authorized officer.

25. Signature Mandie Crozier
Name *(Printed/Typed)* Mandie Crozier
Date 11/22/05

Title Regulatory Specialist

Approved by *(Signature)* Bradley G. Hill
Name *(Printed/Typed)* BRADLEY G. HILL
Date 01-26-06

Title ENVIRONMENTAL SCIENTIST III
Office

Application approval does not warrant or certify the the applicant holds legal or equitable title to those rights in the subject lease which would entitle the applicant to conduct operations thereon.
Conditions of approval, if any, are attached.

Title 18 U.S.C. Section 1001 and Title 43 U.S.C. Section 1212, make it a crime for any person knowingly and willfully to make to any department or agency of the United States any false, fictitious or fraudulent statements or representations as to any matter within its jurisdiction.

**(Instructions on reverse)*

Federal Approval of this Action is Necessary

RECEIVED
NOV 23 2005
DIV. OF OIL, GAS & MINING

T9S, R16E, S.L.B.&M.

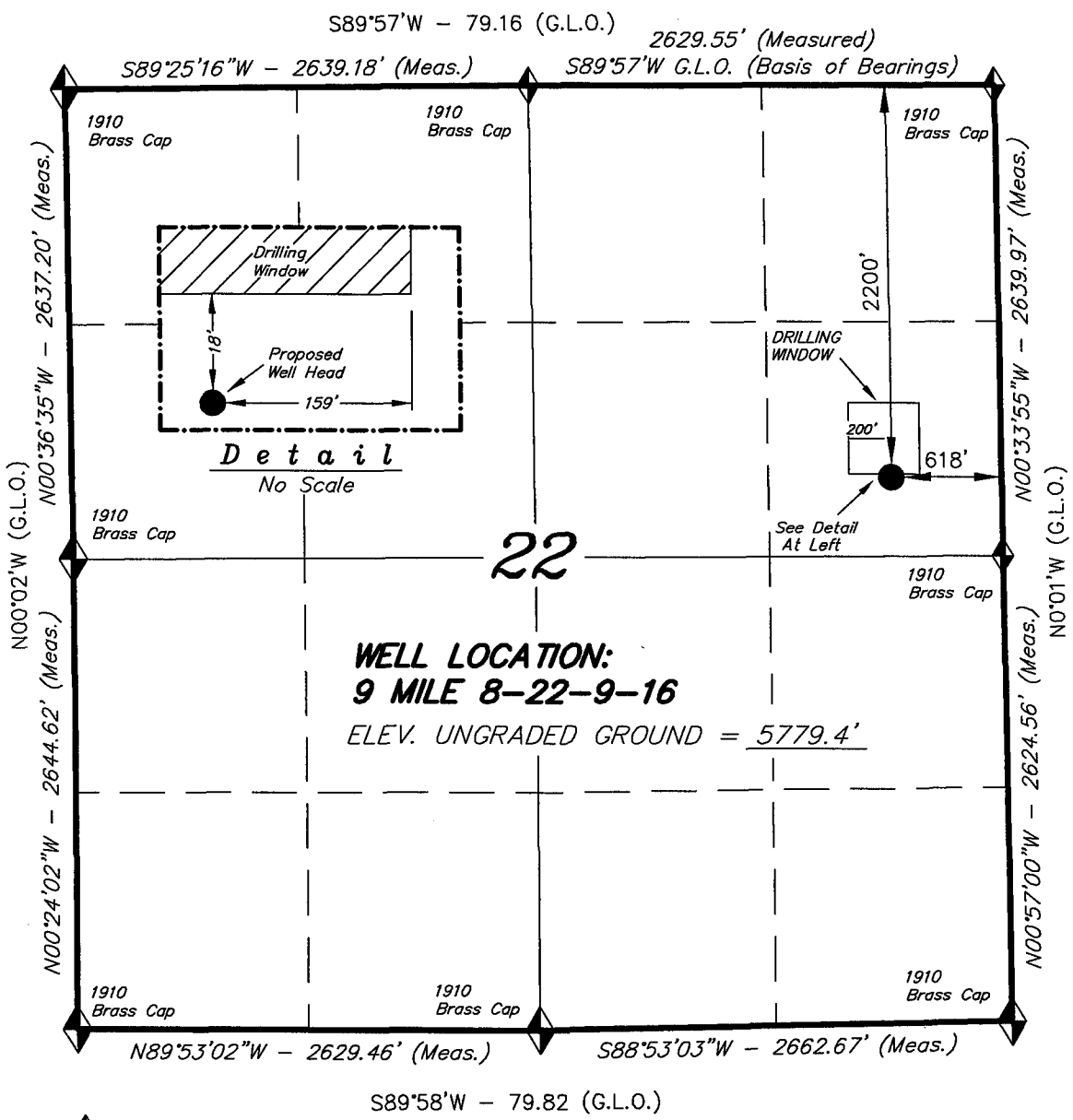

◆ = SECTION CORNERS LOCATED

BASIS OF ELEV; U.S.G.S. 7-1/2 min QUAD (MYTON SE)

NEWFIELD PRODUCTION COMPANY

WELL LOCATION, 9 MILE 8-22-9-16, LOCATED AS SHOWN IN THE SE 1/4 NE 1/4 OF SECTION 22, T9S, R16E, S.L.B.&M. DUCHESNE COUNTY, UTAH.

N

THIS IS TO CERTIFY THAT THE ABOVE PLAT WAS PREPARED FROM FIELD NOTES OF ACTUAL SURVEYS MADE BY ME OR UNDER MY SUPERVISION AND THAT THE SAME ARE TRUE AND CORRECT TO THE BEST OF MY KNOWLEDGE AND BELIEF.

REGISTERED LAND SURVEYOR No.189377 STATE OF UTAH

STACY W. STEWART
REGISTERED LAND SURVEYOR
REGISTRATION No. 189377
STATE OF UTAH

TRI STATE LAND SURVEYING & CONSULTING
180 NORTH VERNAL AVE. – VERNAL, UTAH 84078
(435) 781-2501

SCALE: 1" = 1000'	SURVEYED BY: D.P.
DATE: 10-3-05	DRAWN BY: F.T.M.
NOTES:	FILE #

NEWFIELD PRODUCTION COMPANY
FEDERAL #8-22-9-16
SE/NE SECTION 22, T9S, R16E
DUCHESNE COUNTY, UTAH

ONSHORE ORDER NO. 1

DRILLING PROGRAM

1. ***GEOLOGIC SURFACE FORMATION:***

Uinta formation of Upper Eocene Age

2. ***ESTIMATED TOPS OF IMPORTANT GEOLOGIC MARKERS:***

Uinta	0' – 1955'
Green River	1955'
Wasatch	5850'

3. ***ESTIMATED DEPTHS OF ANTICIPATED WATER, OIL, GAS OR MINERALS:***

Green River Formation 1955' – 5850' - Oil

4. ***PROPOSED CASING PROGRAM***

Please refer to the Monument Butte Field Standard Operation Procedure (SOP).

5. ***MINIMUM SPECIFICATIONS FOR PRESSURE CONTROL:***

Please refer to the Monument Butte Field SOP. See Exhibit "C".

6. ***TYPE AND CHARACTERISTICS OF THE PROPOSED CIRCULATION MUDS:***

Please refer to the Monument Butte Field SOP.

7. ***AUXILIARY SAFETY EQUIPMENT TO BE USED:***

Please refer to the Monument Butte Field SOP.

8. ***TESTING, LOGGING AND CORING PROGRAMS:***

Please refer to the Monument Butte Field SOP.

9. ***ANTICIPATED ABNORMAL PRESSURE OR TEMPERATURE:***

The anticipated maximum bottom hole pressure is 1800 psi. It is not anticipated that abnormal temperatures will be encountered.

10. ***ANTICIPATED STARTING DATE AND DURATION OF THE OPERATIONS:***

Please refer to the Monument Butte Field SOP.

NEWFIELD PRODUCTION COMPANY
FEDERAL #8-22-9-16
SE/NE SECTION 22, T9S, R16E
DUCHESNE COUNTY, UTAH

ONSHORE ORDER NO. 1

MULTI-POINT SURFACE USE & OPERATIONS PLAN

1. EXISTING ROADS

See attached Topographic Map "A"

To reach Newfield Production Company well location site Federal #8-22-9-16 located in the SE 1/4 NE 1/4 Section 22, T9S, R16E, Duchesne County, Utah:

Proceed southwesterly out of Myton, Utah along Highway 40 - 1.6 miles ± to the junction of this highway and UT State Hwy 53; proceed southeasterly – 11.7 miles ± to it's junction with an existing dirt road to the southwest; proceed southwesterly – 5.6 miles ± to it's junction with the beginning of the proposed access road; proceed along the proposed access road – 150'± to the proposed well location.

2. PLANNED ACCESS ROAD

See Topographic Map "B" for the location of the proposed access road.

3. LOCATION OF EXISTING WELLS

Refer to Exhibit "B".

4. LOCATION OF EXISTING AND/OR PROPOSED FACILITIES

All permanent surface equipment will be painted Carlsbad Canyon.
Please refer to the Monument Butte Field Standard Operating Procedure (SOP).

5. LOCATION AND TYPE OF WATER SUPPLY

Please refer to the Monument Butte Field SOP. See Exhibit "A".

6. SOURCE OF CONSTRUCTION MATERIALS

Please refer to the Monument Butte Field SOP.

7. METHODS FOR HANDLING WASTE DISPOSAL

Please refer to the Monument Butte Field SOP.

8. ANCILLARY FACILITIES

Please refer to the Monument Butte Field SOP.

9. *WELL SITE LAYOUT*

See attached Location Layout Diagram.

10. *PLANS FOR RESTORATION OF SURFACE*

Please refer to the Monument Butte Field SOP.

11. *SURFACE OWNERSHIP* - Bureau Of Land Management

12. *OTHER ADDITIONAL INFORMATION*

The Archaeological Resource Survey and Paleontological Resource Survey for this area are attached. MOAC Report # 05-240, 7/25/05. Paleontological Resource Survey prepared by, Wade E. Miller, 9/28/05. See attached report cover pages, Exhibit "D".

For the Federal #8-22-9-16 Newfield Production Company requests 150' of disturbed area be granted in Lease UTU-64379 to allow for construction of the proposed access road. **Refer to Topographic Map "B".** The proposed access road will be an 18' crown road (9' either side of the centerline) with drainage ditches along either side of the proposed road whether it is deemed necessary in order to handle any run-off from normal meteorological conditions that are prevalent to this area. The maximum grade will be less than 8%. There will be no culverts required along this access road. There will be barrow ditches and turnouts as needed along this road. There are no fences encountered along this proposed road. There will be no new gates or cattle guards required. All construction material for this access road will be borrowed material accumulated during construction of the access road.

Newfield Production Company requests 150' of disturbed area be granted in Lease UTU-64379 to allow for construction of the proposed gas lines. It is proposed that the disturbed area will be 50' wide to allow for construction of a buried 6" gas gathering line, and a buried 3" poly fuel gas line. Both lines will tie in to the existing pipeline infrastructure. **Refer to Topographic Map "C."** For a ROW plan of development, please refer to the Monument Butte Field SOP.

Water Disposal
Immediately upon first production, all produced water will be confined to a steel storage tank. If the production water meets quality guidelines, it is transported to the Ashley, Monument Butte, Jonah, and Beluga water injection facilities by company or contract trucks. Subsequently, the produced water is injected into approved Class II wells to enhance Newfield's secondary recovery project.

Water not meeting quality criteria, is disposed at Newfield's Pariette #4 disposal well (Sec. 7, T9S R19E) or at State of Utah approved surface disposal facilities.

Threatened, Endangered, And Other Sensitive Species
Golden Eagle: Due to this proposed well access roads proximity (less that 0.5 mile) to an existing inactive golden eagle nest site, no new construction or surface disturbing activities will be allowed between March 1 and June 30. If the nest remains inactive on June 30th (based on a pre-construction survey by a qualified biologist), the operator may construct and drill the location between June 30 and March 1 of the following year. If the nest site becomes active prior to June 30, no new construction or surface disturbing activities will be allowed within 0.5 mile of the nest until the nest becomes inactive for two full breeding seasons. In the event that this well becomes a producing well, it must be equipped with a multi-cylinder engine or hospital muffler to reduce noise levels.

Reserve Pit Liner
A 12 mil liner with felt is required. Please refer to the Monument Butte Field SOP.

Location and Reserve Pit Reclamation
Please refer to the Monument Butte Field SOP.

The following seed mixture will be used on the topsoil stockpile, to the recontoured surface of the reserve pit, and for final reclamation: (All poundages are in pure live seed)

Crested Wheatgrass	*Agropyron Cristatum*	12 lbs/acre

Details of the On-Site Inspection
The proposed Federal #8-22-9-16 was on-sited on 8/31/05. The following were present; Shon Mckinnon (Newfeild Production) and Todd MaGrath (Bureau of Landmanagement). Weather conditions were clear and ground cover was 100% open.

13. LESSEE'S OR OPERATORS REPRESENTATIVE AND CERTIFICATION

Representative

Name:	Shon Mckinnon
Address:	Route #3 Box 3630
	Myton, UT 84052
Telephone:	(435) 646-3721

Certification

Please be advised that NEWFIELD PRODUCTION COMPANY is considered to be the operator of well #8-22-9-16 SE/NE Section 22, Township 9S, Range 16E: Lease UTU-64379 Duchesne County, Utah: and is responsible under the terms and conditions of the lease for the operations conducted upon the leased lands. Bond coverage is provided by Hartford Accident #4488944.

I hereby certify that the proposed drillsite and access route have been inspected, and I am familiar with the conditions which currently exist; that the statements made in this plan are true and correct to the best of my knowledge; and that the work associated with the operations proposed here will be performed by Newfield Production Company and its contractors and subcontractors in conformity with this plan and the terms and conditions under which it is approved. This statement is subject to the provisions of 18 U.S.C. 1001 for the filing of a false statement.

November 22, 2005
Date

Mandie Crozier
Regulatory Specialist
Newfield Production Company

NEWFIELD PRODUCTION COMPANY

9 MILE 8-22-9-16

Section 22, T9S, R16E, S.L.B.&M.

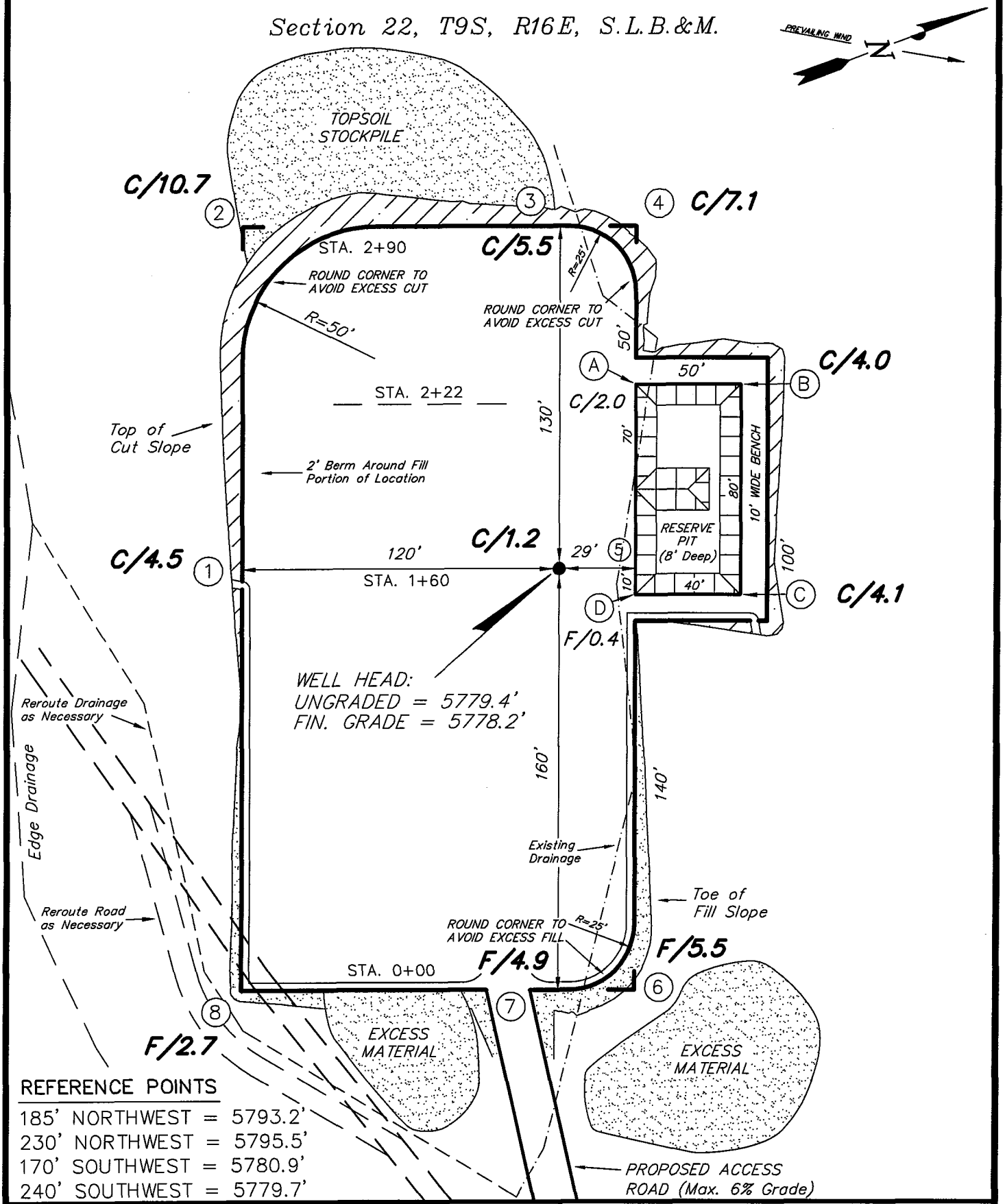

REFERENCE POINTS

185' NORTHWEST = 5793.2'
230' NORTHWEST = 5795.5'
170' SOUTHWEST = 5780.9'
240' SOUTHWEST = 5779.7'

SURVEYED BY:	D.P.	SCALE:	1" = 50'
DRAWN BY:	F.T.M.	DATE::	10-3-05

Tri State Land Surveying, Inc.
180 NORTH VERNAL AVE. VERNAL, UTAH 84078
(435) 781-2501

NEWFIELD PRODUCTION COMPANY

CROSS SECTIONS

9 MILE 8-22-9-16

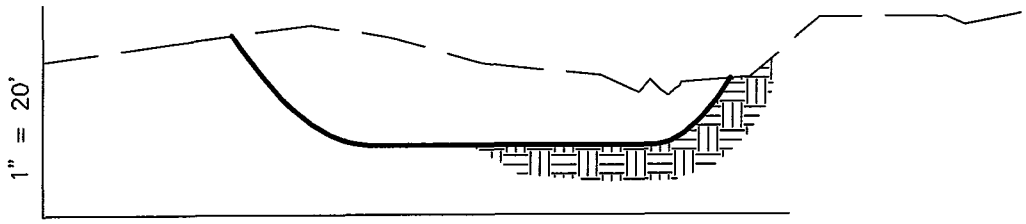

1" = 50'

STA. 2+90

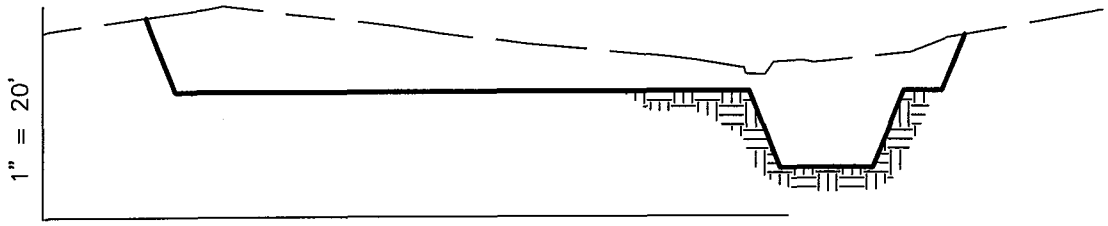

1" = 50'

STA. 2+22

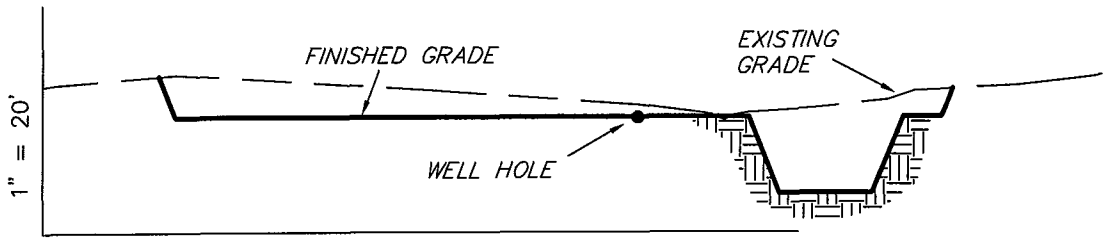

1" = 50'

STA. 1+60

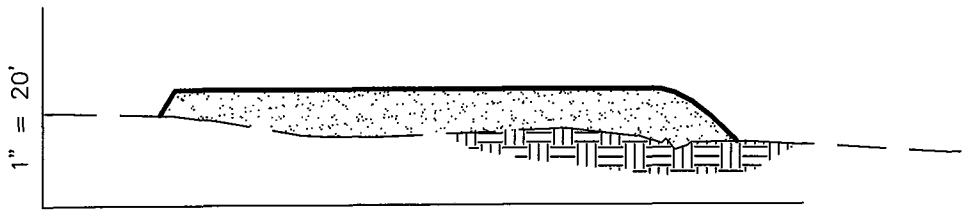

1" = 50'

STA. 0+00

NOTE:
UNLESS OTHERWISE NOTED
CUT SLOPES ARE AT 1:1
FILL SLOPES ARE AT 1.5:1

ESTIMATED EARTHWORK QUANTITIES
(No Shrink or swell adjustments have been used)
(Expressed in Cubic Yards)

ITEM	CUT	FILL	6" TOPSOIL	EXCESS
PAD	4,730	1,890	Topsoil is not included in Pad Cut	2,840
PIT	640	0		640
TOTALS	5,370	1,890	980	3,480

SURVEYED BY: D.P.	SCALE: 1" = 50'	Tri State Land Surveying, Inc.	(435) 781-2501
DRAWN BY: F.T.M.	DATE:: 10-3-05	180 NORTH VERNAL AVE. VERNAL, UTAH 84078	

NEWFIELD PRODUCTION COMPANY

TYPICAL RIG LAYOUT

9 MILE 8-22-9-16

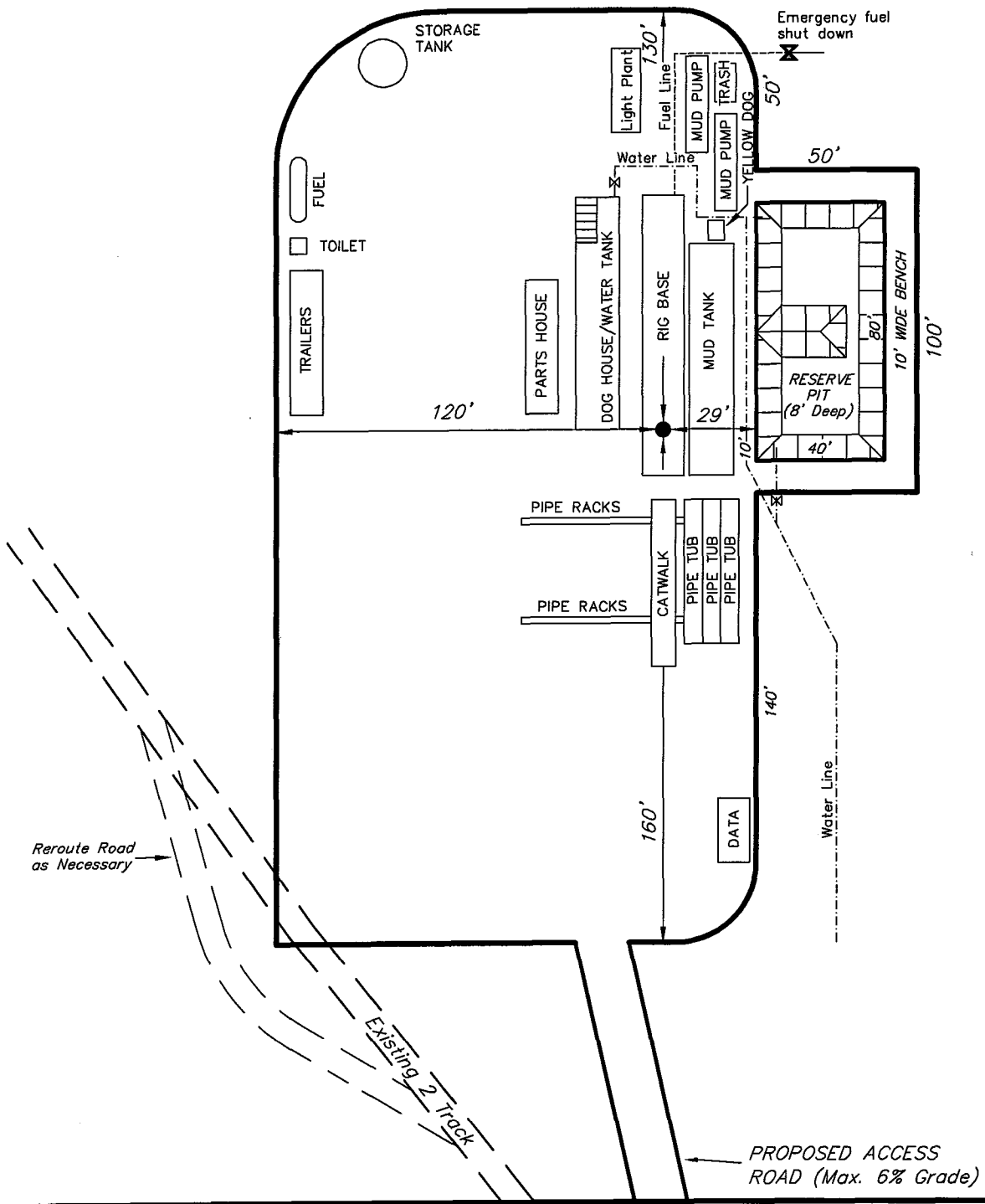

SURVEYED BY: D.P.	SCALE: 1" = 50'	Tri State Land Surveying, Inc.	(435) 781-2501
DRAWN BY: F.T.M.	DATE:: 10-3-05	180 NORTH VERNAL AVE. VERNAL, UTAH 84078	

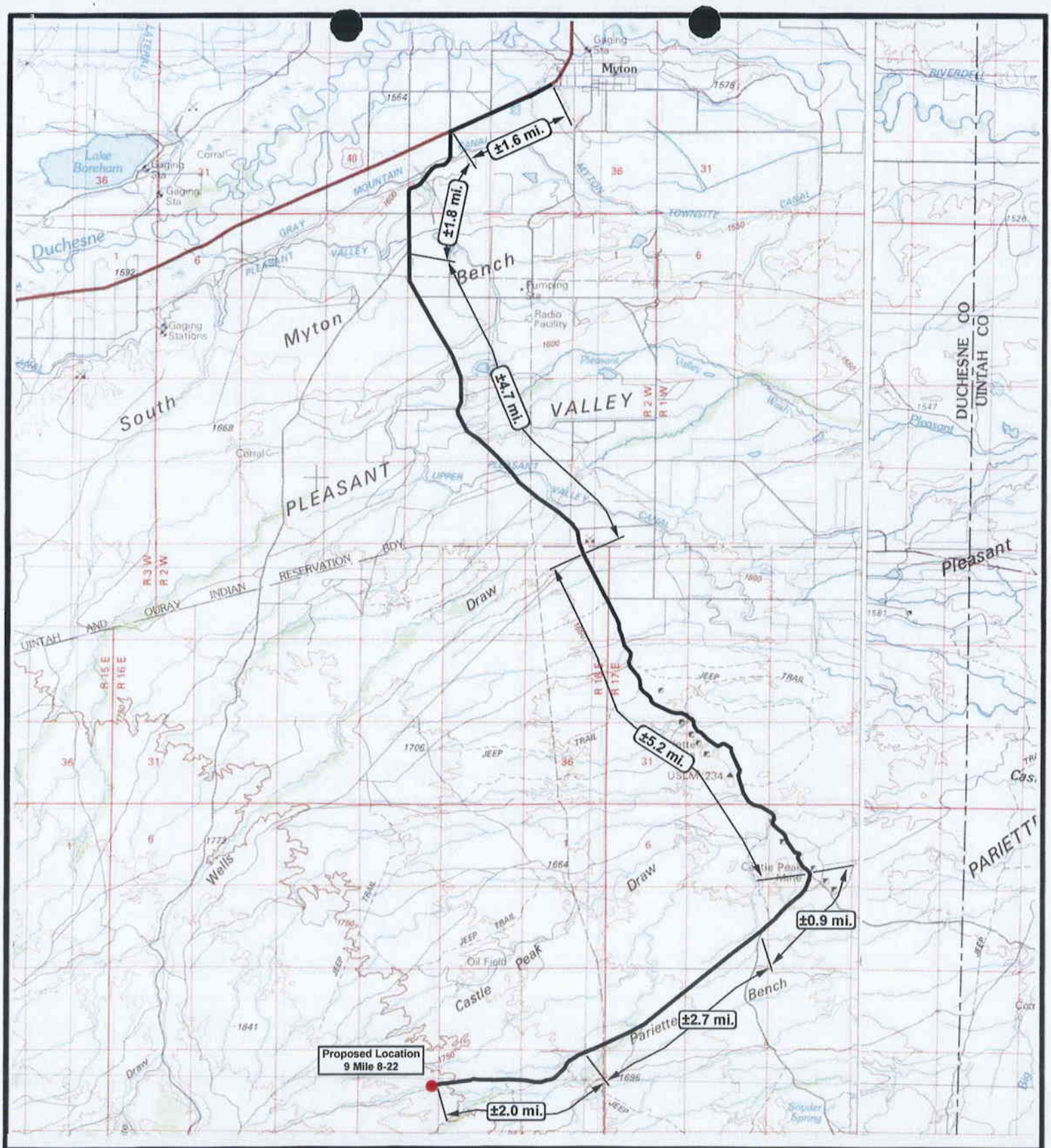

NEWFIELD
Exploration Company

9 Mile 8-22-9-16
SEC. 22, T9S, R16E, S.L.B.&M.

N

Tri-State Land Surveying Inc.
(435) 781-2501
180 North Vernal Ave. Vernal, Utah 84078

SCALE: 1 = 100,000
DRAWN BY: mw
DATE: 10-04-2005

Legend
Existing Road
Proposed Access

TOPOGRAPHIC MAP
"A"

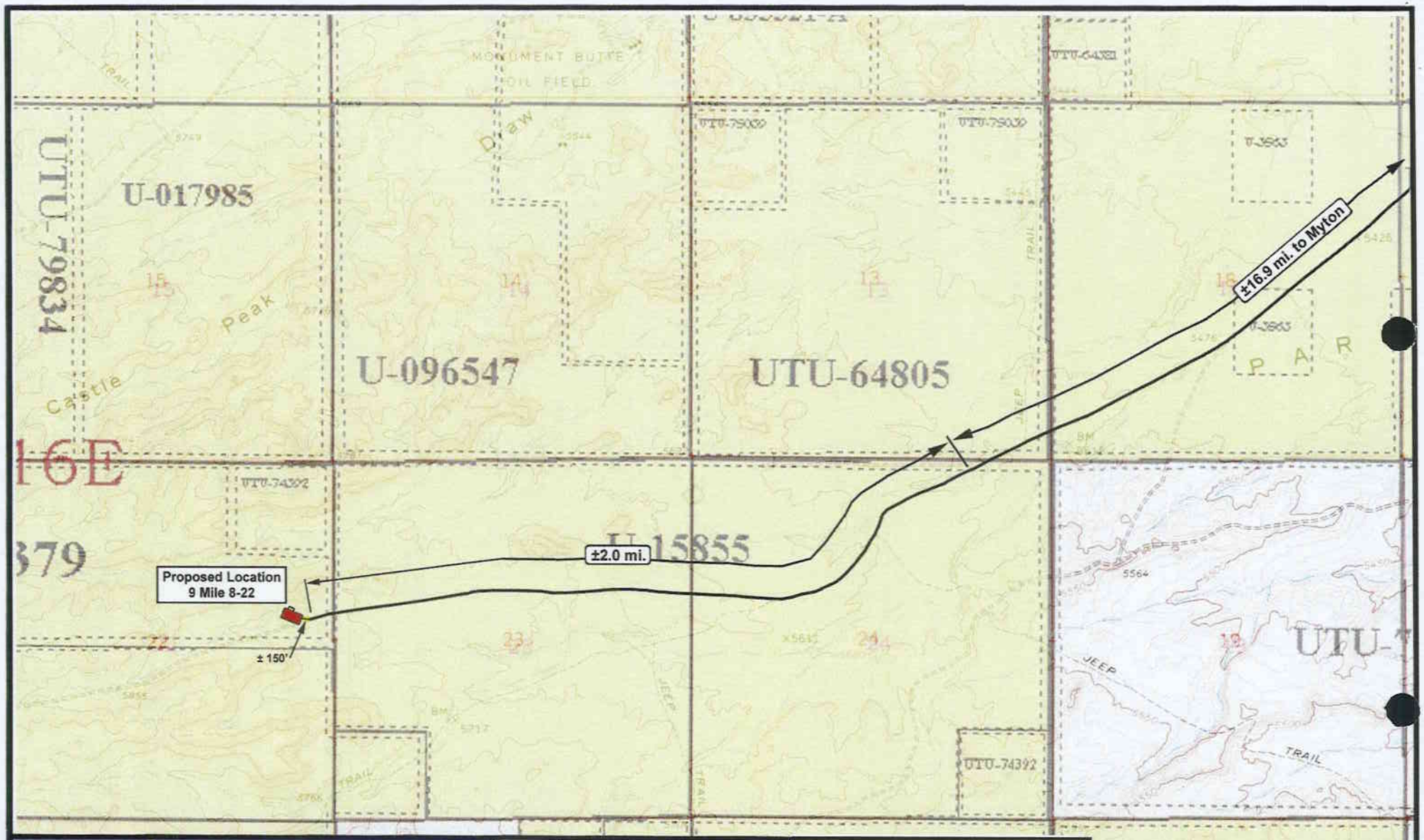

NEWFIELD
Exploration Company

9 Mile 8-22-9-16
SEC. 22, T9S, R16E, S.L.B.&M.

N

Tri-State Land Surveying Inc.
(435) 781-2501
180 North Vernal Ave. Vernal, Utah 84078

SCALE: 1" = 2,000'
DRAWN BY: mw
DATE: 10-04-2005

Legend
Existing Road
Proposed Access

"B"

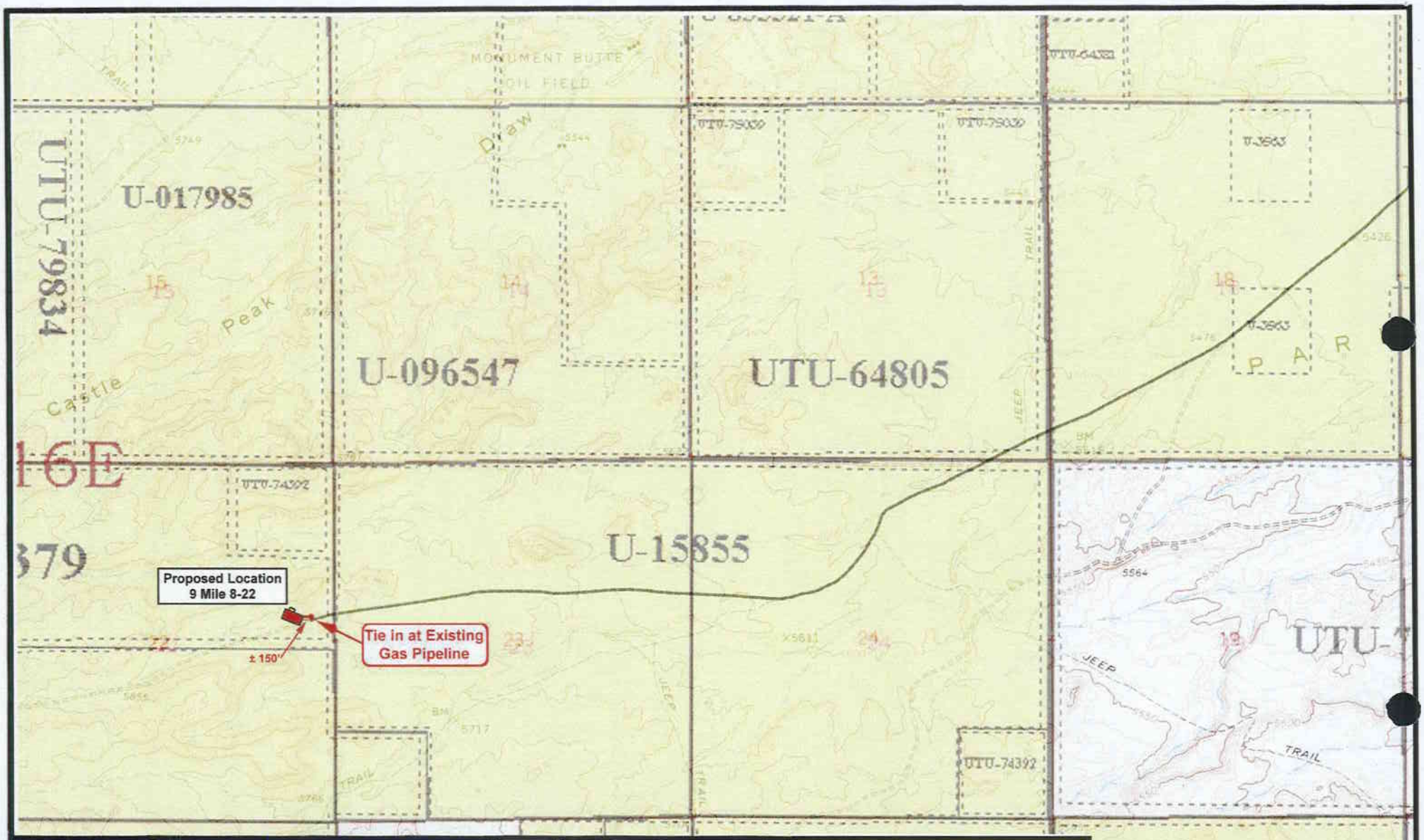
U-017985
UTU-79834
U-096547
UTU-64805
U-15855
UTU-74392
UTU-79039
UTU-64321
U-3563
MONUMENT BUTTE OIL FIELD
Draw
Castle Peak
JEEP TRAIL
16E
379
Proposed Location
9 Mile 8-22
Tie in at Existing
Gas Pipeline
± 150'
UTU-1138
NEWFIELD
Exploration Company
9 Mile 8-22-9-16
SEC. 22, T9S, R16E, S.L.B.&M.
N
Tri-State
Land Surveying Inc.
(435) 781-2501
180 North Vernal Ave. Vernal, Utah 84078
SCALE: 1" = 2,000'
DRAWN BY: mw
DATE: 10-04-2005
Legend
Roads
Proposed Gas Line
"C"

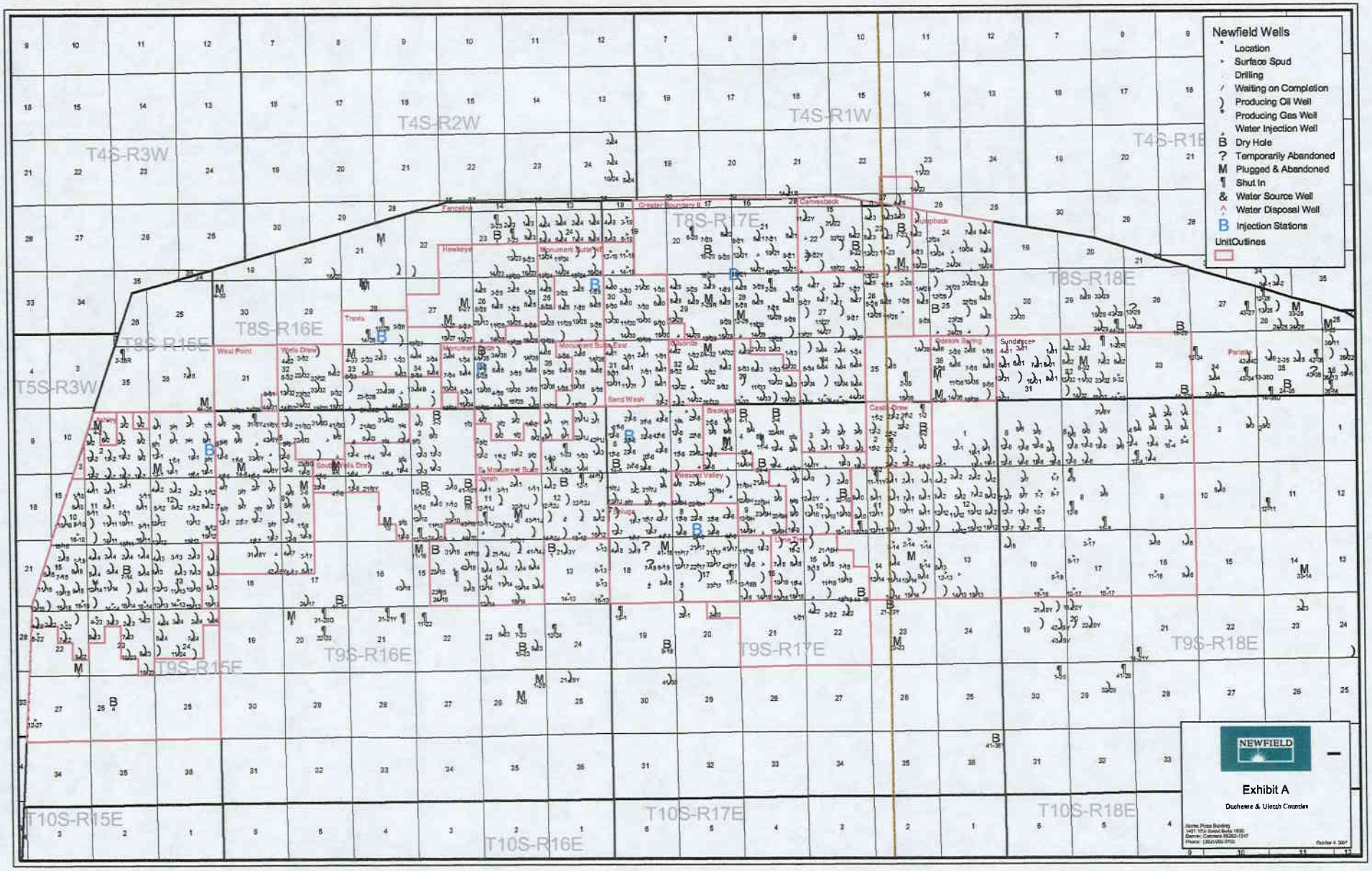
Newfield Wells
Location
Surface Spud
Drilling
Waiting on Completion
Producing Oil Well
Producing Gas Well
Water Injection Well
Dry Hole
Temporarily Abandoned
Plugged & Abandoned
Shut In
Water Source Well
Water Disposal Well
Injection Stations
UnitOutlines
T4S-R3W
T4S-R2W
T4S-R1W
T4S-R1E
T8S-R17E
T8S-R18E
T8S-R15E
T8S-R16E
T5S-R3W
T9S-R16E
T9S-R17E
T9S-R18E
T9S-R15E
T10S-R15E
T10S-R16E
T10S-R17E
T10S-R18E
Greater Boundary II
Castlepeak
Jumpback
Hawkeye
Monument Butte
Travis
West Point
Wells Draw
Monument Butte East
Sand Wash
Beluga
Cedar Draw
Pleasant Valley
Eastern Extension
Lone Tree
Sundance
Pariette
NEWFIELD
Exhibit A
Duchesne & Uintah Counties

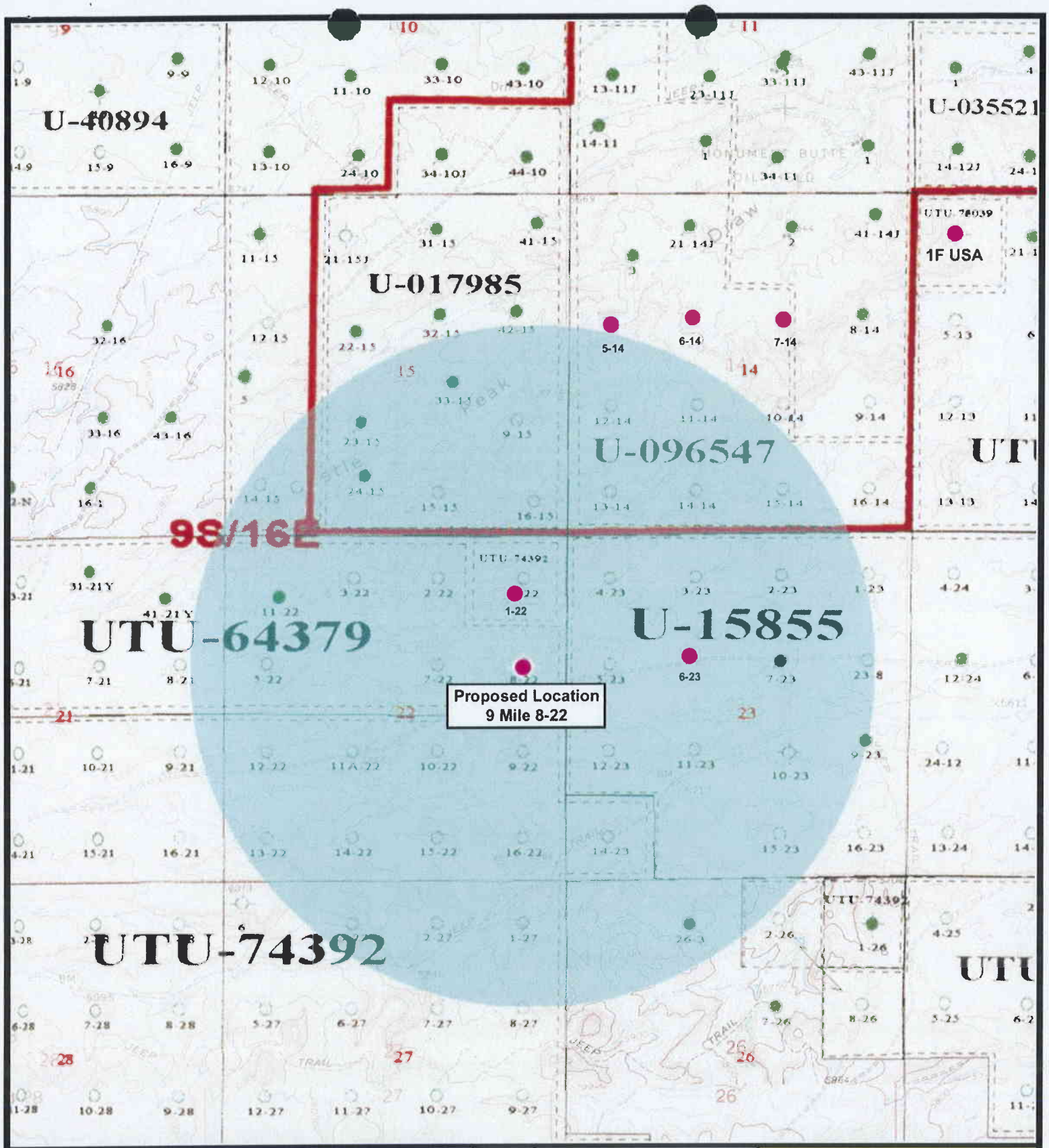

NEWFIELD
Exploration Company

9 Mile 8-22-9-16
SEC. 22, T9S, R16E, S.L.B.&M.

N

Tri-State Land Surveying Inc.
(435) 781-2501
180 North Vernal Ave. Vernal, Utah 84078

SCALE: 1" = 2,000'
DRAWN BY: mw
DATE: 10-04-2005

Legend
Well Locations
One-Mile Radius

Exhibit "B"

2-M SYSTEM

Blowout Prevention Equipment Systems

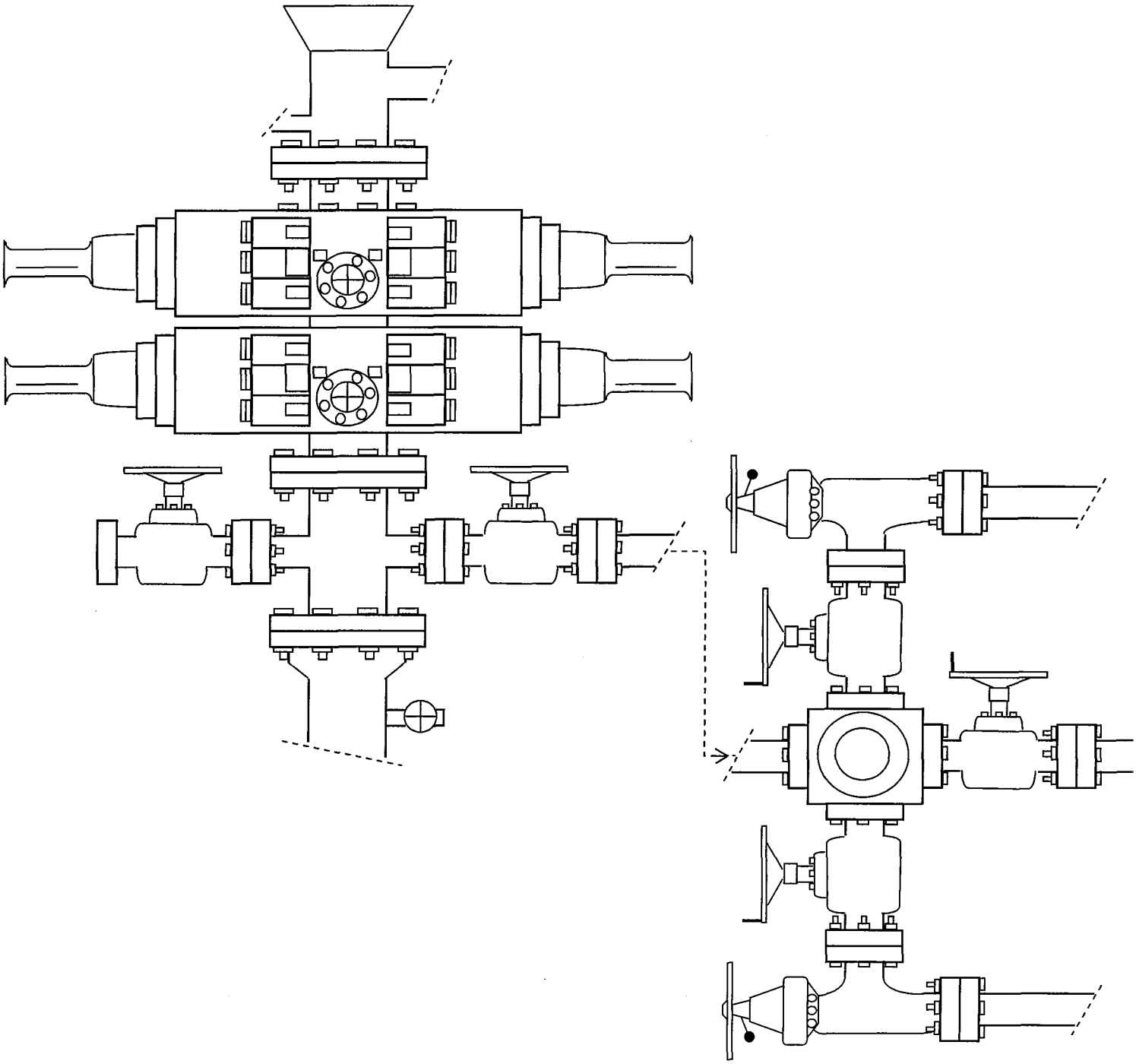

EXHIBIT C

Exhibit "D"
Page 1 of 2

CULTURAL RESOURCE INVENTORY OF NEWFIELD EXPLORATION'S BLOCK PARCEL IN TOWNSHIP 9S, RANGE 16E, SECTION 21 and 22, DUCHESNE COUNTY, UTAH

By:

Katie Simon

Prepared For:

Bureau fo Land Management
Vernal Field Office

Prepared Under Contract With:

Newfield Exploration Company
Rt. 3 Box 3630
Myton, UT 84052

Prepared By:

Montgomery Archaeological Consultants, Inc.
P.O. Box 147
Moab, Utah 84532

MOAC Report No. 05-240

July 25, 2005

United States Department of Interior (FLPMA)
Permit No. 05-UT-60122

State of Utah Antiquities Project (Survey)
Permit No. U-05-MQ-0709b

NEWFIELD PRODUCTION COMPANY

PALEONTOLOGICAL FIELD SURVEY OF PROPOSED PRODUCTION DEVELOPMENT AREAS, DUCHESNE COUNTY, UTAH

SW 1/4, SE 1/4, and SW 1/4, Section 9 [9,11,12,13 & 14-9-9-16]; Entire Section 22 (excluding NE 1/4, NE 1/4 & NW 1/4, NW 1/4) [2,3,5 through16-9-9-16]; Entire Section 23 (excluding SE 1/4, NW 1/4, SW 1/4, NE 1/4, NE 1/4 & NW 1/4, SE 1/4) [1 through 5, 8,11 through 16-9-916]; Entire Section 24 (excluding SW 1/4, NW 1/4) [1 through 4, 6 through 16-9-9-16] all in Township 9 South, Range 16 East

REPORT OF SURVEY

Prepared for:

Newfield Production Company

Prepared by:

Wade E. Miller
Consulting Paleontologist
September 28, 2005

WORKSHEET
APPLICATION FOR PERMIT TO DRILL

APD RECEIVED: 11/23/2005

API NO. ASSIGNED: 43-013-32959

WELL NAME: FEDERAL 8-22-9-16

OPERATOR: NEWFIELD PRODUCTION (N2695)

CONTACT: MANDIE CROZIER

PHONE NUMBER: 435-646-3721

PROPOSED LOCATION:

SENE 22 090S 160E

SURFACE: 2200 FNL 0618 FEL

BOTTOM: 2200 FNL 0618 FEL

DUCHESNE

MONUMENT BUTTE (105)

LEASE TYPE: 1 - Federal

LEASE NUMBER: UTU-64379

SURFACE OWNER: 1 - Federal

PROPOSED FORMATION: GRRV

COALBED METHANE WELL? NO

INSPECT LOCATN BY: / /

Tech Review	Initials	Date
Engineering		
Geology		
Surface		

LATITUDE: 40.01754

LONGITUDE: -110.0977

RECEIVED AND/OR REVIEWED:

✓ Plat

✓ Bond: Fed[1] Ind[] Sta[] Fee[]
(No. UT0056)

N Potash (Y/N)

N Oil Shale 190-5 (B) or 190-3 or 190-13

✓ Water Permit
(No. MUNICIPAL)

N RDCC Review (Y/N)
(Date:)

NA Fee Surf Agreement (Y/N)

NA Intent to Commingle (Y/N)

LOCATION AND SITING:

___ R649-2-3.

Unit ___

___ R649-3-2. General
Siting: 460 From Qtr/Qtr & 920' Between Wells

✓ R649-3-3. Exception

___ Drilling Unit
Board Cause No: ___
Eff Date: ___
Siting: ___

___ R649-3-11. Directional Drill

COMMENTS: Sop, Seperate file

STIPULATIONS: 1- Federal Approval
2- Spacing Stip

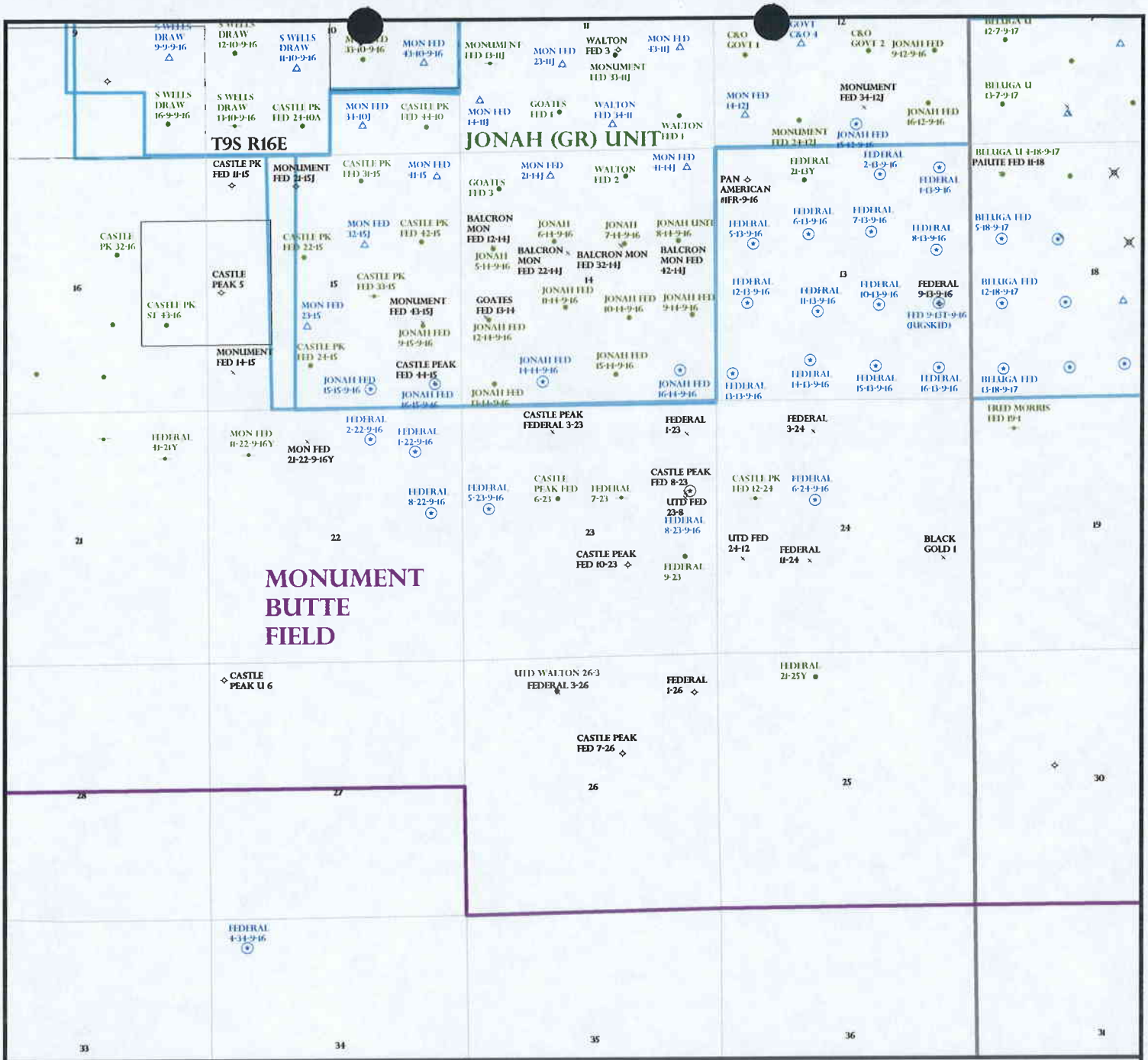

OPERATOR: NEWFIELD PROD CO (N2695)

SEC: 22 T. 9S R. 16E

FIELD: MONUMENT BUTTE (105)

COUNTY: DUCHESNE

SPACING: R649-3-3 / EXCEPTION LOCATION

Field Status
- ABANDONED
- ACTIVE
- COMBINED
- INACTIVE
- PROPOSED
- STORAGE
- TERMINATED

Unit Status
- EXPLORATORY
- GAS STORAGE
- NF PP OIL
- NF SECONDARY
- PENDING
- PI OIL
- PP GAS
- PP GEOTHERML
- PP OIL
- SECONDARY
- TERMINATED

Wells Status
- GAS INJECTION
- GAS STORAGE
- LOCATION ABANDONED
- NEW LOCATION
- PLUGGED & ABANDONED
- PRODUCING GAS
- PRODUCING OIL
- SHUT-IN GAS
- SHUT-IN OIL
- TEMP. ABANDONED
- TEST WELL
- WATER INJECTION
- WATER SUPPLY
- WATER DISPOSAL
- DRILLING

Utah Oil Gas and Mining

N
W E
S

PREPARED BY: DIANA WHITNEY

DATE: 29-NOVEMBER-2005

NEWFIELD

ROCKY MOUNTAINS

January 23, 2006

Utah Division of Oil, Gas & Mining
P.O. Box 145801
Attn: Diana Whitney
Salt Lake City, Utah 84114-5801

Re: Exception Location: Federal 8-22-9-16
2200' FNL, 618' FEL SENE Sec 22-T9S-16E
Duschene Cty., Utah; Lease UTU-64379

Dear Ms. Whitney:

Pursuant to Rule R649-3-3 of the Oil & Gas Rules and Regulations of the State of Utah, Newfield Production Company, Inc. hereby requests an exception location for the drilling of the captioned well. Rule R649-3-2 requires a well to be located in the center of a forty (40) acre quarter-quarter section, or a substantially equivalent lot or tract, with a tolerance of two hundred (200) feet in any direction from the center.

The above referenced location is an exception location under Rule 649-3-2, being 18' south of the drilling window tolerance for the SENE of Sec 22-T9S-R16E. The attached plat depicts the proposed drillsite location and illustrates the deviation from the drilling window, in accordance with Rule R649-3-2. The requested location has been selected due to the terrain.

Please note the location is completely within Federal lease UTU-64379. The drillsite lease and all surrounding acreage within a four hundred sixty foot (460') radius of the proposed location is owned by Newfield Production Company, Yates Petroleum Corporation, Yates Drilling Company, Myco Industries, Inc. and Abo Petroleum Corporation. We have contacted these owners and their consent to this location is attached.

If you have any questions or need additional information please contact me at (303)-382-4448. Thank you for your assistance in this matter.

Sincerely,
NEWFIELD PRODUCTION COMPANY

Laurie Deseau
Properties Administrator

RECEIVED
JAN 2 6 2006
DIV. OF OIL, GAS & MINING

Form 3160-3
(September 2001)

FORM APPROVED
OMB No. 1004-0136
Expires January 31, 2004

UNITED STATES
DEPARTMENT OF THE INTERIOR
BUREAU OF LAND MANAGEMENT

APPLICATION FOR PERMIT TO DRILL OR REENTER

5. Lease Serial No.
UTU-64379

6. If Indian, Allottee or Tribe Name
N/A

7. If Unit or CA Agreement, Name and No.
N/A

8. Lease Name and Well No.
Federal 8-22-9-16

9. API Well No.

10. Field and Pool, or Exploratory
Monument Butte

11. Sec., T., R., M., or Blk. and Survey or Area
SE/NE Sec. 22, T9S R16E

1a. Type of Work: [X] DRILL [ ] REENTER

1b. Type of Well: [X] Oil Well [ ] Gas Well [ ] Other [X] Single Zone [ ] Multiple Zone

2. Name of Operator
Newfield Production Company

3a. Address
Route #3 Box 3630, Myton UT 84052

3b. Phone No. *(include area code)*
(435) 646-3721

4. Location of Well *(Report location clearly and in accordance with any State requirements.*)*
At surface SE/NE 2200' FNL 618' FEL
At proposed prod. zone

14. Distance in miles and direction from nearest town or post office*
Approximatley 18.9 miles southwest of Myton, Utah

12. County or Parish
Duchesne

13. State
UT

15. Distance from proposed* location to nearest property or lease line, ft. (Also to nearest drlg. unit line, if any) Approx. 618' f/lse, NA' f/unit

16. No. of Acres in lease
1626.36

17. Spacing Unit dedicated to this well
40 Acres

18. Distance from proposed location* to nearest well, drilling, completed, applied for, on this lease, ft. Approx. 1582'

19. Proposed Depth
5850'

20. BLM/BIA Bond No. on file
UT0056

21. Elevations (Show whether DF, KDB, RT, GL, etc.)
5779' GL

22. Approximate date work will start*
1st Quarter 2006

23. Estimated duration
Approximately seven (7) days from spud to rig release.

24. Attachments

The following, completed in accordance with the requirements of Onshore Oil and Gas Order No.1, shall be attached to this form:

1. Well plat certified by a registered surveyor.
2. A Drilling Plan.
3. A Surface Use Plan (if the location is on National Forest System Lands, the SUPO shall be filed with the appropriate Forest Service Office).
4. Bond to cover the operations unless covered by an existing bond on file (see Item 20 above).
5. Operator certification.
6. Such other site specific information and/or plans as may be required by the authorized officer.

25. Signature
Name *(Printed/Typed)* Mandie Crozier
Date 11/22/05

Title
Regulatory Specialist

Approved by *(Signature)*
Name *(Printed/Typed)*
Date

Title
Office

Application approval does not warrant or certify the the applicant holds legal or equitable title to those rights in the subject lease which would entitle the applicant to conduct operations thereon.
Conditions of approval, if any, are attached.

Title 18 U.S.C. Section 1001 and Title 43 U.S.C. Section 1212, make it a crime for any person knowingly and willfully to make to any department or agency of the United States any false, fictitious or fraudulent statements or representations as to any matter within its jurisdiction.

**(Instructions on reverse)*

RECEIVED
JAN 2 6 2006
DIV. OF OIL, GAS & MINING

T9S, R16E, S.L.B.&M.

NEWFIELD PRODUCTION COMPANY

WELL LOCATION, 9 MILE 8-22-9-16, LOCATED AS SHOWN IN THE SE 1/4 NE 1/4 OF SECTION 22, T9S, R16E, S.L.B.&M. DUCHESNE COUNTY, UTAH.

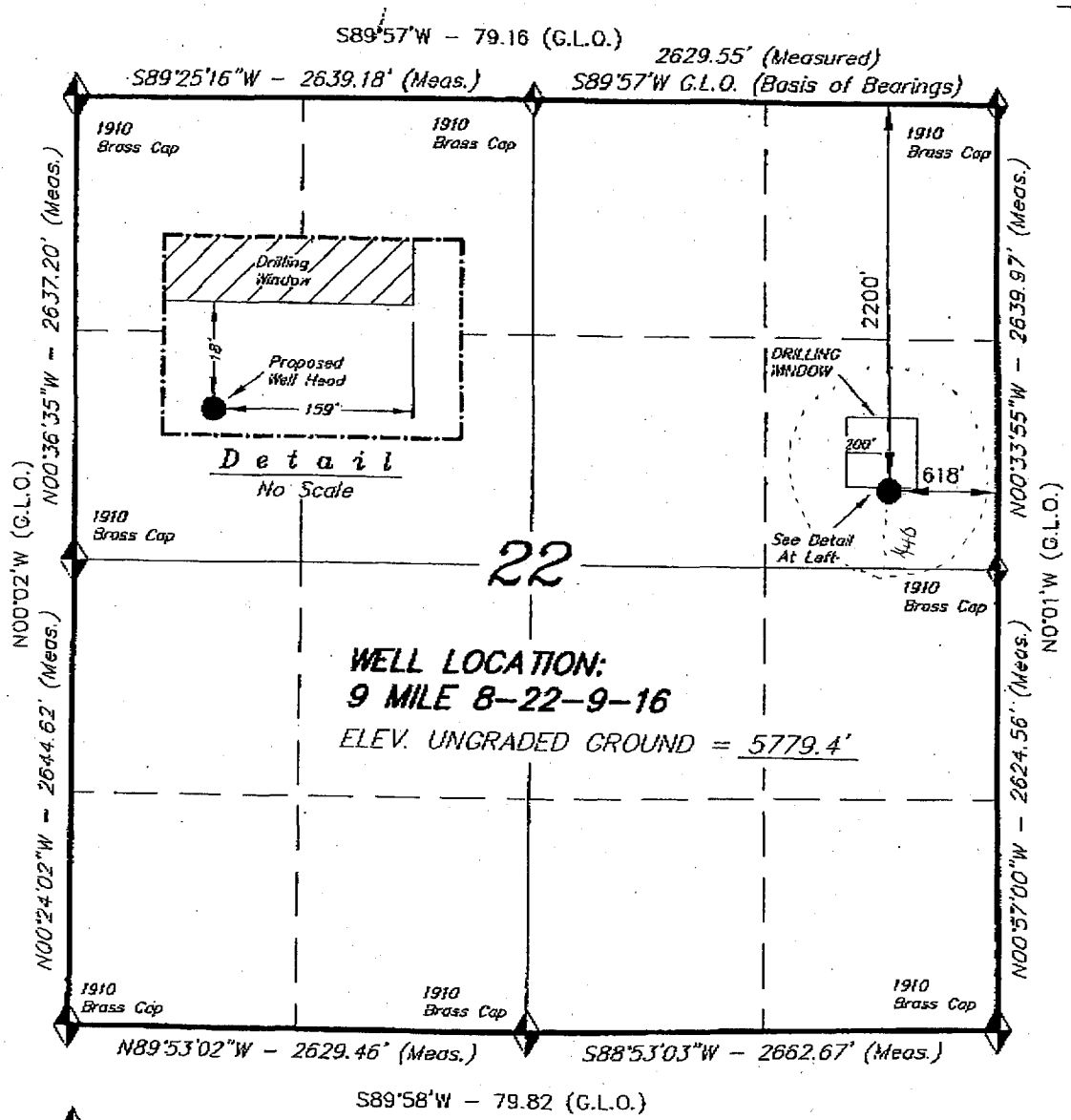

◆ = SECTION CORNERS LOCATED

BASIS OF ELEV; U.S.G.S. 7-1/2 min QUAD (MYTON SE)

THIS IS TO CERTIFY THAT THE ABOVE PLAT WAS PREPARED FROM FIELD NOTES OF ACTUAL SURVEYS MADE BY ME OR UNDER MY SUPERVISION AND THAT THE SAME ARE TRUE AND CORRECT TO THE BEST OF MY KNOWLEDGE AND BELIEF.

REGISTERED LAND SURVEYOR No.189377 STATE OF UTAH

STACY W. STEWART
REGISTERED LAND SURVEYOR
REGISTRATION No. 189377
STATE OF UTAH

TRI STATE LAND SURVEYING & CONSULTING
180 NORTH VERNAL AVE. - VERNAL, UTAH 84078
(435) 781-2501

SCALE: 1" = 1000'	SURVEYED BY: D.P.
DATE: 10-3-05	DRAWN BY: F.T.M.
NOTES:	FILE #

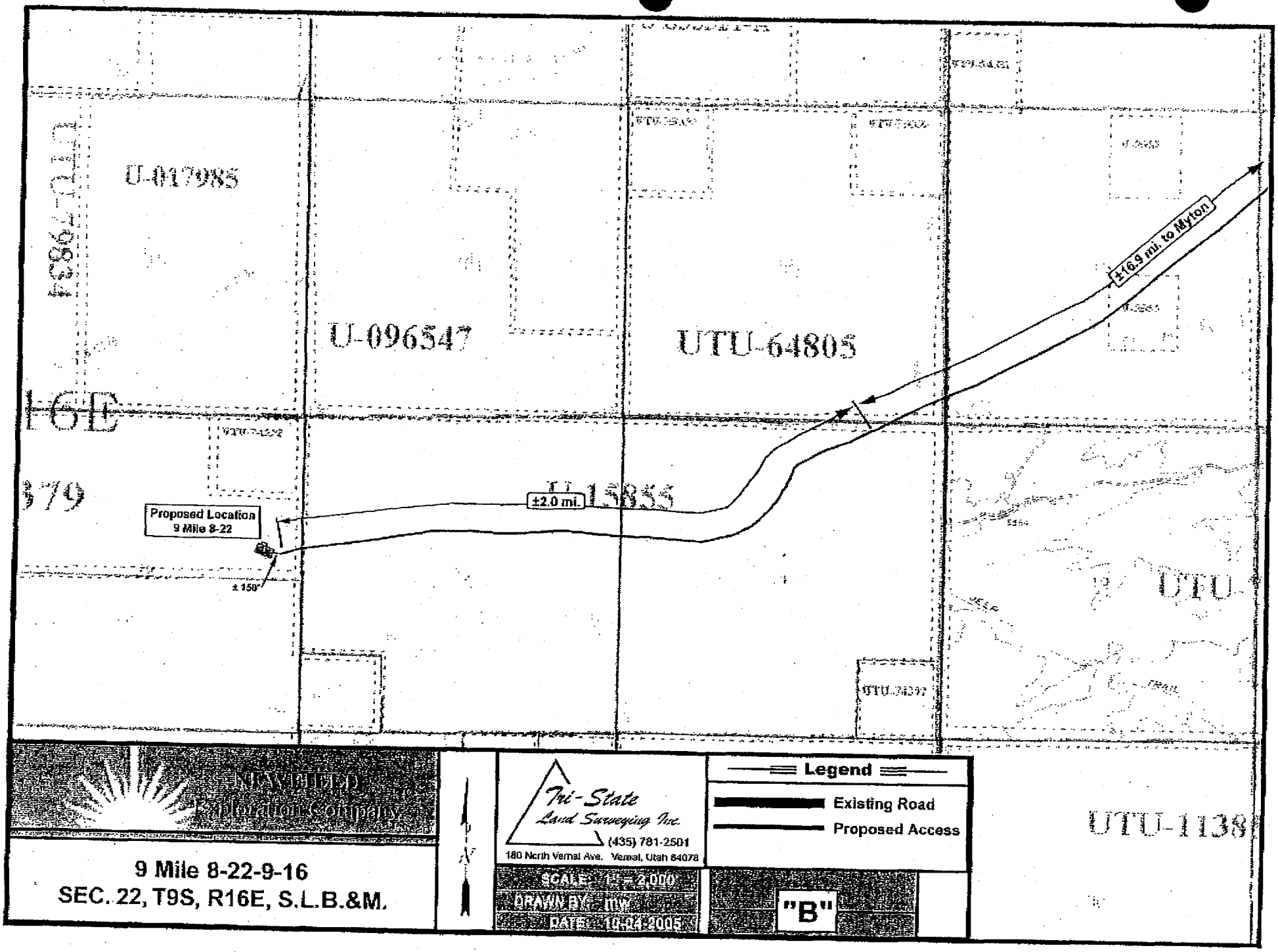
U-017985
U-096547
UTU-64805
16E
Proposed Location
9 Mile 8-22
±2.0 mi.
±16.9 mi. to Myton
± 150'
UTU-1138
NEWFIELD
Exploration Company
9 Mile 8-22-9-16
SEC. 22, T9S, R16E, S.L.B.&M.
Tri-State
Land Surveying Inc.
(435) 781-2501
180 North Vernal Ave. Vernal, Utah 84078
SCALE: 1" = 2,000'
DRAWN BY: mw
DATE: 10-24-2005
Legend
Existing Road
Proposed Access
"B"

Exception Location
Federal 8-22-9-16; Lease UTU-64379

Please be advised that Yates Petroleum Corporation, Yates Drilling Company, Myco Industries, Inc. and Abo Petroleum Corporation do not have an objection to the proposed location of the aforementioned well.

By: Dave Boneau

Date: 1/18/2006

DAVE BONEAU ENGINEERING MANAGER
Print Name and Title

State of Utah

Department of Natural Resources

MICHAEL R. STYLER
Executive Director

Division of Oil, Gas & Mining

JOHN R. BAZA
Division Director

JON M. HUNTSMAN, JR.
Governor

GARY R. HERBERT
Lieutenant Governor

January 26, 2006

Newfield Production Company
Rt. #3, Box 3630
Myton, UT 84052

Re: Federal 8-22-9-16 Well, 2200' FNL, 618' FEL, SE NE, Sec. 22, T. 9 South, R. 16 East, Duchesne County, Utah

Gentlemen:

Pursuant to the provisions and requirements of Utah Code Ann.§ 40-6-1 *et seq.*, Utah Administrative Code R649-3-1 *et seq.*, and the attached Conditions of Approval, approval to drill the referenced well is granted.

Appropriate information has been submitted to DOGM and administrative approval of the requested exception location is hereby granted.

This approval shall expire one year from the above date unless substantial and continuous operation is underway, or a request for extension is made prior to the expiration date. The API identification number assigned to this well is 43-013-32959.

Sincerely,

Gil Hunt
Associate Director

pab
Enclosures

cc: Duchesne County Assessor
Bureau of Land Management, Vernal District Office

1594 West North Temple, Suite 1210, PO Box 145801, Salt Lake City, UT 84114-5801
telephone (801) 538-5340 • facsimile (801) 359-3940 • TTY (801) 538-7458 • *www.ogm.utah.gov*

Operator: Newfield Production Company
Well Name & Number Federal 8-22-9-16
API Number: 43-013-32959
Lease: UTU-64379

Location: SE NE **Sec.** 22 **T.** 9 South **R.** 16 East

Conditions of Approval

1. General
   Compliance with the requirements of Utah Admin. R. 649-1 *et seq.*, the Oil and Gas Conservation General Rules, and the applicable terms and provisions of the approved Application for permit to drill.

2. Notification Requirements
   Notify the Division within 24 hours of spudding the well.
   - Contact Carol Daniels at (801) 538-5284.

   Notify the Division prior to commencing operations to plug and abandon the well.
   - Contact Dan Jarvis at (801) 538-5338

3. Reporting Requirements
   All required reports, forms and submittals will be promptly filed with the Division, including but not limited to the Entity Action Form (Form 6), Report of Water Encountered During Drilling (Form 7), Weekly Progress Reports for drilling and completion operations, and Sundry Notices and Reports on Wells requesting approval of change of plans or other operational actions.

4. State approval of this well does not supersede the required federal approval, which must be obtained prior to drilling.

5. This proposed well is located in an area for which drilling units (well spacing patterns) have not been established through an order of the Board of Oil, Gas and Mining (the "Board"). In order to avoid the possibility of waste or injury to correlative rights, the operator is requested, once the well has been drilled, completed, and has produced, to analyze geological and engineering data generated therefrom, as well as any similar data from surrounding areas if available. As soon as is practicable after completion of its analysis, and if the analysis suggests an area larger than the quarter-quarter section upon which the well is located is being drained, the operator is requested to seek an appropriate order from the Board establishing drilling and spacing units in conformance with such analysis by filing a Request for Agency Action with the Board.

RECEIVED

NOV 2 8 2005

BLM VERNAL, UTAH

Form 3160-3
(September 2001)

FORM APPROVED
OMB No. 1004-0136
Expires January 31, 2004

UNITED STATES
DEPARTMENT OF THE INTERIOR
BUREAU OF LAND MANAGEMENT

APPLICATION FOR PERMIT TO DRILL OR REENTER

5. Lease Serial No.
UTU-64379

6. If Indian, Allottee or Tribe Name
N/A

1a. Type of Work: [x] DRILL [ ] REENTER

7. If Unit or CA Agreement, Name and No.
N/A

1b. Type of Well: [x] Oil Well [ ] Gas Well [ ] Other [x] Single Zone [ ] Multiple Zone

8. Lease Name and Well No.
Federal 8-22-9-16

2. Name of Operator
Newfield Production Company

9. API Well No.
43-013-32959

3a. Address
Route #3 Box 3630, Myton UT 84052

3b. Phone No. *(include area code)*
(435) 646-3721

10. Field and Pool, or Exploratory
Monument Butte

4. Location of Well *(Report location clearly and in accordance with any State requirements.*)*
At surface SE/NE 2200' FNL 618' FEL
At proposed prod. zone

11. Sec., T., R., M., or Blk. and Survey or Area
SE/NE Sec. 22, T9S R16E

14. Distance in miles and direction from nearest town or post office*
Approximatley 18.9 miles southwest of Myton, Utah

12. County or Parish
Duchesne

13. State
UT

15. Distance from proposed* location to nearest property or lease line, ft. (Also to nearest drig. unit line, if any) Approx. 618' f/lse, NA' f/unit

16. No. of Acres in lease
1626.36

17. Spacing Unit dedicated to this well
40 Acres

18. Distance from proposed location* to nearest well, drilling, completed, applied for, on this lease, ft. Approx. 1582'

19. Proposed Depth
5850'

20. BLM/BIA Bond No. on file
UT0056

21. Elevations (Show whether DF, KDB, RT, GL, etc.)
5779' GL

22. Approximate date work will start*
1st Quarter 2006

23. Estimated duration
Approximately seven (7) days from spud to rig release.

24. Attachments

The following, completed in accordance with the requirements of Onshore Oil and Gas Order No.1, shall be attached to this form:

1. Well plat certified by a registered surveyor.
2. A Drilling Plan.
3. A Surface Use Plan (if the location is on National Forest System Lands, the SUPO shall be filed with the appropriate Forest Service Office).
4. Bond to cover the operations unless covered by an existing bond on file (see Item 20 above).
5. Operator certification.
6. Such other site specific information and/or plans as may be required by the authorized officer.

25. Signature: Mandie Crozier
Name *(Printed/Typed)*: Mandie Crozier
Date: 11/22/05

Title: Regulatory Specialist

Approved by *(Signature)*: Jerry Kenczka
Name *(Printed/Typed)*: JERRY KENCZKA
Date: 9-6-2006

Title: Assistant Field Manager Lands & Mineral Resources
Office:

Application approval does not warrant or certify the the applicant holds legal or equitable title to those rights in the subject lease which would entitle the applicant to conduct operations thereon.
Conditions of approval, if any, are attached.

Title 18 U.S.C. Section 1001 and Title 43 U.S.C. Section 1212, make it a crime for any person knowingly and willfully to make to any department or agency of the United States any false, fictitious or fraudulent statements or representations as to any matter within its jurisdiction.

**(Instructions on reverse)*

NOTICE OF APPROVAL **CONDITIONS OF APPROVAL ATTACHED**

RECEIVED

SEP 1 5 2006

DIV. OF OIL, GAS & MINING

UNITED STATES DEPARTMENT OF THE INTERIOR
BUREAU OF LAND MANAGEMENT
VERNAL FIELD OFFICE
170 South 500 East VERNAL, UT 84078 (435) 781-4400

CONDITIONS OF APPROVAL FOR APPLICATION FOR PERMIT TO DRILL

Company:	**Newfield Production Company**	**Location:**	**SENE, Sec 22, T9S, R16E**
Well No:	**Federal 8-22-9-16**	**Lease No:**	**UTU-64379**
API No:	**43-013- 32959**	**Agreement:**	**N/A**

Petroleum Engineer:	Matt Baker	Office: 435-781-4490	Cell: 435-828-4470
Petroleum Engineer:	Michael Lee	Office: 435-781-4432	Cell: 435-828-7875
Supervisory Petroleum Technician:	Jamie Sparger	Office: 435-781-4502	Cell: 435-828-3913
Environmental Scientist:	Paul Buhler	Office: 435-781-4475	Cell: 435-828-4029
Environmental Scientist:	Karl Wright	Office: 435-781-4484	
Natural Resource Specialist:	Holly Villa	Office: 435-781-4404	
Natural Resource Specialist:	Melissa Hawk	Office: 435-781-4476	
Natural Resource Specialist:	Chris Carusona	Office: 435-781-4441	
Natural Resource Specialist:	Scott Ackerman	Office: 435-781-4437	
After Hours Contact Number: 435-781-4513		Fax: 435-781-4410	

A COPY OF THESE CONDITIONS SHALL BE FURNISHED TO YOUR FIELD REPRESENTATIVE TO INSURE COMPLIANCE

All lease and/or unit operations are to be conducted in such a manner that full compliance is made with the applicable laws, regulations (43 CFR Part 3160), and this approved Application for Permit to Drill including Surface and Downhole Conditions of Approval. The operator is considered fully responsible for the actions of his subcontractors. A copy of the approved APD must be on location during construction, drilling, and completion operations. **This permit is approved for a one-year period. An additional year extension may be applied for by sundry notice prior to expiration.**

NOTIFICATION REQUIREMENTS

Location Construction (Notify Chris Carusona)	-	Forty-Eight (48) hours prior to construction of location and access roads.
Location Completion (Notify Chris Carusona)	-	Prior to moving on the drilling rig.
Spud Notice (Notify Petroleum Engineer)	-	Twenty-Four (24) hours prior to spudding the well.
Casing String & Cementing (Notify Jamie Sparger)	-	Twenty-Four (24) hours prior to running casing and cementing all casing strings
BOP & Related Equipment Tests (Notify Jamie Sparger)	-	Twenty-Four (24) hours prior to initiating pressure tests
First Production Notice (Notify Petroleum Engineer)	-	Within Five (5) business days after new well begins or production resumes after well has been off production for more than ninety (90) days

SURFACE USE PROGRAM
CONDITIONS OF APPROVAL (COAs)

- This well is being approved in accordance with Washington Instruction Memorandum 2005-247 and Section 390 (Category 3) of the Energy Policy Act which establishes statutory categorical exclusions (CX) under the National Environmental Policy Act (NEPA). Category 3 states that an oil or gas well can be drilled within a developed field for which an approved land use plan or any environmental document prepared pursuant to NEPA analyzed drilling as a reasonably foreseeable activity, so long as such plan or document was approved within five (5) years prior to the date of spudding the well. This well is covered under the *Final Environmental Impact Statement and Record of Decision Castle Peak and Eightmile Flat Oil and Gas Exploration Project Newfield Rocky Mountains Inc.,* signed November 21, 2005. If the well has not been spudded by November 21, 2010, a new environmental document will have to be prepared prior to the approval of the APD.

- All applicable local, state, and/or federal laws, regulations, and/or statutes must be complied with.

- Construction related traffic shall be restricted to approved routes. Cross-country vehicle travel will not be allowed.

- No drilling or surface disturbing activities are allowed 600' or less from live water.

- The proposed action is in Mountain Plover nesting habitat. According to the 43 CFR 3101.1-2, surface disturbing activities and drilling may be prohibited during the year to minimize adverse impacts to nesting raptors. During the period of **May 15th through June 15th**, no new drilling or surface disturbing activities will be allowed. If a request for an exception to this limitation is desired, the request must be made in writing to the Vernal Field Office Manager and approved prior to drilling or surface disturbing activities.

- If additional erosion occurs during the life of this project, more culverts, low water crossings, berms, wing ditches or etc. will be needed to control the erosion.

- The reserve pit will be lined with a 16 ml or greater liner prior to spudding.

- No vehicle travel, construction or routine maintenance activities shall be performed during periods when the soil is too wet to adequately support vehicles and/or construction equipment. If such equipment creates ruts in excess of four inches deep, the soil shall be deemed too wet to adequately support construction equipment.

- The liner is to be cut 5 feet below ground or at the level of the cuttings, whichever is deeper and the excess liner material is to be disposed of at an authorized disposal site.

- When the reserve pit contains fluids or toxic substances, the operator must ensure that animals do not ingest or become entrapped in pit fluids.

- The well pad and access/pipeline require monitoring by a qualified Paleontologist prior to and during any surface disturbing activities.

- Prevent fill and stock piles from entering drainages.

Cultural And Paleontological Resources - Any cultural and/or paleontological resource (historic or prehistoric site or object or fossil) discovered by the holder, or any person working on his behalf, on public or Federal land shall be immediately reported to the authorized officer. Holder shall suspend all operations in the immediate area of such discovery until written authorization to proceed is issued by the authorized officer. An evaluation of the discovery will be made by the authorized officer to determine appropriate actions to prevent the loss of significant cultural or scientific values. The holder will be responsible for the cost of evaluation and a decision as to proper mitigation measures shall be made by the authorized officer after consulting with the holder.

- The access road will be crowned and ditched. Flat-bladed roads are **NOT** allowed.
- Notify the Authorized Officer 48 hours prior to surface disturbing activities.
- All well facilities not regulated by OSHA will be painted Carlsbad Canyon.
- The boulders >3' found at the surface or above ground will be saved for final reclamation.
- Interim Reclamation (see below):
- Where possible, strip six inches of topsoil from the location as shown on the cut sheet. After the well is converted to an injection well, the topsoil will be spread and re-contoured on the location and immediately seeded with the seed mix below.

Interim Reclamation Seed Mix for location:

Galleta grass	*Hilaria jamesil*	6 lbs/acre
Western wheatgrass	*Pascopyrum smithii*	6 lbs/acre
	Per Live Seed Total	12 lbs/acre

- The topsoil from the reserve pit should be stripped and piled separately near the reserve pit. When the reserve pit is closed it should be re-contoured, then the area should be seeded in the same manner as the topsoil.
- There shall be no primary or secondary noxious weeds in the seed mixture.
- Once the location is plugged and abandoned contact the Authorized Officer for final reclamation plans.
- The above listed seed mix shall be used to seed all unused portions of the pad including the topsoil and stock piles, and the reserve pits. Re-seeding may be required if the first seeding is not successful.
- The seed shall be drilled or disked into the ground or hand broadcast onto the ground. Planting depth shall not exceed one-half inch using a seed drill. If the seed is hand broadcast then the seed mixture will be doubled and the area raked or chained to cover the seed.

DOWNHOLE CONDITIONS OF APPROVAL

All provisions outlined in Onshore Oil & Gas Order #2 Drilling Operations shall be strictly adhered to. The following items are emphasized:

SITE SPECIFIC DOWNHOLE CONDITIONS OF APPROVAL

- None

DRILLING/COMPLETION/PRODUCING OPERATING STANDARDS

- There shall be no deviation from the proposed drilling, completion, and/or workover program as approved. Safe drilling and operating practices must be observed. All wells, whether drilling, producing, suspended, or abandoned, shall be identified in accordance with 43 CFR 3162.6. There shall be a sign or marker with the name of the operator, lease serial number, well number, and surveyed description of the well. Any changes in operation must have prior approval from the BLM, Vernal Field Office Petroleum Engineers.

- The spud date and time shall be reported orally to Vernal Field Office within 24 hours of spudding.

- **Notify Vernal Field Office Supervisory Petroleum Engineering Technician at least 24 hours in advance of casing cementing operations and BOPE & casing pressure tests.**

- Blowout prevention equipment (BOPE) shall remain in use until the well is completed or abandoned. Closing unit controls shall remain unobstructed and readily accessible at all times. Choke manifolds shall be located outside of the rig substructure.

- All BOPE components shall be inspected daily and those inspections shall be recorded in the daily drilling report. Components shall be operated and tested as required by Onshore Oil & Gas Order No. 2 to insure good mechanical working order. All BOPE pressure tests shall be performed by a test pump with a chart recorder and **NOT** by the rig pumps. Test shall be reported in the driller's log.

- BOP drills shall be initially conducted by each drilling crew within 24 hours of drilling out from under the surface casing and weekly thereafter as specified in Onshore Oil & Gas Order No. 2.

- Casing pressure tests are required before drilling out from under all casing strings set and cemented in place.

- No aggressive/fresh hard-banded drill pipe shall be used within casing.

- All shows of fresh water and minerals shall be reported and protected. A sample shall be taken of any water flows and a water analysis furnished the BLM, Vernal Field Office. All oil and gas shows shall be adequately tested for commercial possibilities, reported, and protected.

- No location shall be constructed or moved, no well shall be plugged, and no drilling or workover equipment shall be removed from a well to be placed in a suspended status without prior approval of the BLM, Vernal Field Office. If operations are to be suspended for more than 30 days, prior approval of the BLM, Vernal Field Office shall be obtained and notification given before resumption of operations.

- Chronologic drilling progress reports shall be filed directly with the BLM, Vernal Field Office on a

weekly basis in sundry, letter format or e-mail to the Petroleum Engineers until the well is completed.

- Any change in the program shall be approved by the BLM, Vernal Field Office. "Sundry Notices and Reports on Wells" (Form BLM 3160-5) shall be filed for all changes of plans and other operations in accordance with 43 CFR 3162.3-2.

- Emergency approval may be obtained orally, but such approval does not waive the written report requirement. Any additional construction, reconstruction, or alterations of facilities, including roads, gathering lines, batteries, etc., which will result in the disturbance of new ground, shall require the filing of a suitable plan pursuant to Onshore Oil & Gas Order No. 1 of 43 CFR 3164.1 and prior approval by the BLM, Vernal Field Office.

- In accordance with 43 CFR 3162.4-3, this well shall be reported on the "Monthly Report of Operations" (Oil and Gas Operations Report ((OGOR)) starting with the month in which operations commence and continue each month until the well is physically plugged and abandoned. This report shall be filed in duplicate, directly with the Minerals Management Service, P.O. Box 17110, Denver, Colorado 80217-0110, or call 1-800-525-7922 (303) 231-3650 for reporting information.

- Whether the well is completed as a dry hole or as a producer, "Well Completion and Recompletion Report and Log" (BLM Form 3160-4) shall be submitted not later than 30 days after completion of the well or after completion of operations being performed, in accordance with 43 CFR 3162.4-1. Two copies of all logs run, core descriptions, and all other surveys or data obtained and compiled during the drilling, workover, and/or completion operations, shall be filed on BLM Form 3160-4. Submit with the well completion report a geologic report including, at a minimum, formation tops, and a summary and conclusions. Also include deviation surveys, sample descriptions, strip logs, core data, drill stem test data, and results of production tests if performed. Samples (cuttings, fluid, and/or gas) shall be submitted only when requested by the BLM, Vernal Field Office.

- A cement bond log (CBL) will be run from the production casing shoe to the surface casing shoe and shall be utilized to determine the bond quality for the production casing. Submit a field copy of the CBL to this office.

- **Please submit an electronic copy of all other logs run on this well in LAS format to UT_VN_Welllogs@BLM.gov. This submission will supersede the requirement for submittal of paper logs to the BLM.**

- All off-lease storage, off-lease measurement, or commingling on-lease or off-lease shall have prior written approval from the BLM, Vernal Field Office.

- All measurement points shall be identified as point of sales or allocation for royalty determination prior to the installation of facilities.

- Oil and gas meters shall be calibrated in place prior to any deliveries. The Field Office Petroleum Engineers will be provided with a date and time for the initial meter calibration and all future meter proving schedules. A copy of the meter calibration reports shall be submitted to the BLM, Vernal Field Office. All measurement facilities will conform to the API standards for liquid hydrocarbons and the AGA standards for natural gas measurement.

- A schematic facilities diagram as required by Onshore Oil & Gas Order No. 3 shall be submitted to the BLM, Vernal Field Office within 30 days of installation or first production, whichever occurs first. All site security regulations as specified in Onshore Oil & Gas Order No. 3 shall be adhered to. All product lines entering and leaving hydrocarbon storage tanks will be effectively sealed in accordance with Onshore Oil & Gas Order No. 3.

- This APD is approved subject to the requirement that, should the well be successfully completed for production, the BLM, Vernal Field office must be notified when it is placed in a producing status. Such notification will be by written communication and must be received in this office by not later than the fifth business day following the date on which the well is placed on production. The notification shall provide, as a minimum, the following informational items:

  - Operator name, address, and telephone number.
  - Well name and number.
  - Well location (¼¼, Sec., Twn, Rng, and P.M.).
  - Date well was placed in a producing status (date of first production for which royalty will be paid).
  - The nature of the well's production, (i.e., crude oil, or crude oil and casing head gas, or natural gas and entrained liquid hydrocarbons).
  - The Federal or Indian lease prefix and number on which the well is located; otherwise the non-Federal or non-Indian land category, i.e., State or private.
  - Unit agreement and / or participating area name and number, if applicable.
  - Communitization agreement number, if applicable.

- Any venting or flaring of gas shall be done in accordance with Notice to Lessees (NTL) 4A and needs prior approval from Field Office Petroleum Engineers.

- All undesirable events (fires, accidents, blowouts, spills, discharges) as specified in NTL 3A will be reported to the BLM, Vernal Field Office. Major events as defined in NTL3A, shall be reported verbally within 24 hours, followed by a written report within 15 days. "Other than Major Events" will be reported in writing within 15 days. "Minor Events" will be reported on the Monthly Report of Operations and Production

- Pursuant to Onshore Oil & Gas Order No. 7, this is authorization for pit disposal of water produced from this well for a period of 90 days from the date of initial production. A permanent disposal method must be approved by this office and in operation prior to the end of this 90-day period. In order to meet this deadline, an application for the proposed permanent disposal method shall be submitted along with any necessary water analyses, as soon as possible, but no later than 45 days after the date of first production. Any method of disposal which has not been approved prior to the end of the authorized 90-day period will be considered as an Incident of Noncompliance and will be grounds for issuing a shut-in order until an acceptable manner for disposing of said water is provided and approved by this office.

- Unless the plugging is to take place immediately upon receipt of oral approval, the Field Office Petroleum Engineers must be notified at least 24 hours in advance of the plugging of the well, in order that a representative may witness plugging operations. If a well is suspended or abandoned, all pits must be fenced immediately until they are backfilled. The "Subsequent Report of Abandonment" (Form BLM 3160-5) must be submitted within 30 days after the actual plugging of the well bore, showing location of plugs, amount of cement in each, and amount of casing left in hole, and the current status of the surface restoration.

DIVISION OF OIL, GAS AND MINING

SPUDDING INFORMATION

Name of Company: **NEWFIELD PRODUCTION COMPANY**

Well Name: **FEDERAL 8-22-9-16**

Api No: **43-013-32959** Lease Type: **FEDERAL**

Section **22** Township **09S** Range **16E** County **DUCHESNE**

Drilling Contractor **NDSI** RIG # **NS#1**

SPUDDED:

Date **11/01/06**

Time **10:00 AM**

How **DRY**

Drilling will Commence:

Reported by **DON BASTIAN**

Telephone # **(435) 823-6012**

Date **11/01/06** **Signed** **CHD**

FORM 3160-5
(September 2001)

UNITED STATES
DEPARTMENT OF THE INTERIOR
BUREAU OF LAND MANAGEMENT

FORM APPROVED
OMB No. 1004-0135
Expires January 31,2004

SUNDRY NOTICES AND REPORTS ON WELLS

Do not use this form for proposals to drill or to re-enter an abandoned well. Use Form 3160-3 (APD) for such proposals.

5. Lease Serial No.
UTU-64379

6. If Indian, Allottee or Tribe Name.

7. If Unit or CA/Agreement, Name and/or

1. Type of Well
☒ Oil Well ☐ Gas Well ☐ Other

8. Well Name and No.
Federal 8-22-9-16

2. Name of Operator
NEWFIELD PRODUCTION COMPANY

9. API Well No.
4301332959

3a. Address Route 3 Box 3630
Myton, UT 84052

3b. Phone *(include are code)*
435.646.3721

10. Field and Pool, or Exploratory Area
MONUMENT BUTTE

4. Location of Well *(Footage, Sec., T., R., M., or Survey Description)*

SENE Section 22 T9S R16E

11. County or Parish, State
DUCHESNE, UT

12. CHECK APPROPRIATE BOX(ES) TO INIDICATE NATURE OF NOTICE, OR OTHER DATA

TYPE OF SUBMISSION	TYPE OF ACTION			
☐ Notice of Intent	☐ Acidize	☐ Deepen	☐ Production(Start/Resume)	☐ Water Shut-Off
☒ Subsequent Report	☐ Alter Casing	☐ Fracture Treat	☐ Reclamation	☐ Well Integrity
☐ Final Abandonment	☐ Casing Repair	☐ New Construction	☐ Recomplete	☒ Other Spud Notice
	☐ Change Plans	☐ Plug & Abandon	☐ Temporarily Abandon	
	☐ Convert to	☐ Plug Back	☐ Water Disposal	

13. Describe Proposed or Completed Operation (clearly state all pertinent details, including estimated starting date of any proposed work and approximate duration thereof. If the proposal is to deepen directionally or recomplete horizontally, give subsurface locations and measured and true vertical depths of all pertinent markers and zones. Attach the Bond under which the work will be performed or provide the Bond No. on file with BLM/BIA. Required subsequent reports shall be filed within 30 days following completion of the involved operations. If the operation results in a multiple completion or recompletion in a new interval, a Form 3160-4 shall be filed once testing has been completed. Final Abandonment Notices shall be filed only after all requirements, including reclamation, have been completed, and the operator has determined that the site is ready for final inspection.)

On 11/1/2006 MIRU NDSI NS # 1.Spud well @ 10:00 AM. Drill 320' of 12 1/4" hole with air mist. TIH W/ 7 Jt's 8 5/8" J-55 24 # csgn. Set @ 322.53'/ KB On 11/3/2006 cement with 160 sks of class "G" w/ 2% CaCL2 + 1/4# sk Cello- Flake Mixed @ 15.8 ppg > 1.17 cf/ sk yeild. Returned 5 bbl cement to pit. WOC.

I hereby certify that the foregoing is true and correct *(Printed/ Typed)*
Troy Zufelt

Title
Drilling Foreman

Signature

Date
11/03/2006

Approved by

Title

Date

Conditions of approval, if any, are attached. Approval of this notice does not warrant or certify that the applicant holds legal or equitable title to those rights in the subject lease which would entitle the applicant to conduct operations thereon.

Office

RECEIVED
NOV 0 8 2006
DIV. OF OIL, GAS & MINING

Title 18 U.S.C. Section 1001 and Title 43 U.S.C. Section 1212, make it a crime for any person knowingly and willfully to make to any department or agency of the United States any false, fictitious and fraudulent statements or representations as to any matter within its jurisdiction

(Instructions on reverse)

NEWFIELD PRODUCTION COMPANY - CASING & CEMENT REPORT

8 5/8 CASING SET AT 322.53

LAST CASING 8 5/8" set @ 322.53
DATUM 12' KB
DATUM TO CUT OFF CASING
DATUM TO BRADENHEAD FLANGE
TD DRILLER 320 LOGGER
HOLE SIZE 12 1/4

OPERATOR Newfield Production Company
WELL Federal 8-22-9-16
FIELD/PROSPECT Monument Butte
CONTRACTOR & RIG # NDSI NS # 1

LOG OF CASING STRING:

PIECES	OD	ITEM - MAKE - DESCRIPTION	WT / FT	GRD	THREAD	CONDT	LENGTH
		Shoe Joint 44.41'					
		WHI - 92 csg head			8rd	A	0.95
7	8 5/8"	Maverick ST&C csg	24#	J-55	8rd	A	310.68
		GUIDE shoe			8rd	A	0.9

CASING INVENTORY BAL.	FEET	JTS
TOTAL LENGTH OF STRING	312.53	7
LESS NON CSG. ITEMS	1.85	
PLUS FULL JTS. LEFT OUT	0	
TOTAL	310.68	7
TOTAL CSG. DEL. (W/O THRDS)	310.68	7
TIMING	1ST STAGE	
BEGIN RUN CSG. Spud	11/1/2006	10:00 AM
CSG. IN HOLE	11/2/2006	10:30 AM
BEGIN CIRC	11/3/2006	8:37 AM
BEGIN PUMP CMT	11/3/2006	8:50 AM
BEGIN DSPL. CMT	11/3/2006	9:05 AM
PLUG DOWN	11/3/2006	9:15 AM

TOTAL LENGTH OF STRING	312.53
LESS CUT OFF PIECE	2
PLUS DATUM TO T/CUT OFF CSG	12
CASING SET DEPTH	322.53

} COMPARE

GOOD CIRC THRU JOB YES
Bbls CMT CIRC TO SURFACE 5
RECIPROCATED PIPE FOR N/A
BUMPED PLUG TO 130 PSI

CEMENT USED — CEMENT COMPANY- B. J.

STAGE	# SX	CEMENT TYPE & ADDITIVES
1	160	Class "G" w/ 2% CaCL2 + 1/4#/sk Cello-Flake mixed @ 15.8 ppg 1.17 cf/sk yield

CENTRALIZER & SCRATCHER PLACEMENT — SHOW MAKE & SPACING

Centralizers - Middle first, top second & third for 3

COMPANY REPRESENTATIVE Troy Zufelt DATE 11/3/2006

STATE OF UTAH
DIVISION OF OIL, GAS AND MINING
ENTITY ACTION FORM -FORM 6

OPERATOR: NEWFIELD PRODUCTION COMPANY
ADDRESS: RT. 3 BOX 3630
MYTON, UT 84052

OPERATOR ACCT. NO. N2695

ACTION CODE	CURRENT ENTITY NO.	NEW ENTITY NO.	API NUMBER	WELL NAME	WELL LOCATION QQ	SC	TP	RG	COUNTY	SPUD DATE	EFFECTIVE DATE
A	99999	15764	43-013-32959	FEDERAL 8-22-9-16	SE/NE	22	9	16	DUCHESNE	11/01/06	

WELL 1 COMMENTS: GRRV

ACTION CODE	CURRENT ENTITY NO.	NEW ENTITY NO.	API NUMBER	WELL NAME	WELL LOCATION QQ	SC	TP	RG	COUNTY	SPUD DATE	EFFECTIVE DATE
A	99999	15765	43-013-32948	ASHLEY FEDERAL 9-25-9-15	NE/SE	25	9	15	DUCHESNE	11/03/06	

GRRV

ACTION CODE	CURRENT ENTITY NO.	NEW ENTITY NO.	API NUMBER	WELL NAME	WELL LOCATION QQ	SC	TP	RG	COUNTY	SPUD DATE	EFFECTIVE
A	99999	15150	43-013-33251	MON BUTTE FEDERAL M-25-8-16	SE/NW	25	8	16	DUCHESNE	11/03/06	

GRRV

ACTION CODE	CURRENT ENTITY NO.	NEW ENTITY NO.	API NUMBER	WELL NAME	WELL LOCATION QQ	SC	TP	RG	COUNTY	SPUD DATE	EFFECTIVE DATE
B	99999	10835 ✓	43-013-33254	MON BUTTE FEDERAL L-35-8-16	NW/SE	35	8	16	DUCHESNE	11/07/06	

GRRV

ACTION CODE	CURRENT ENTITY NO.	NEW ENTITY NO.	API NUMBER	WELL NAME	WELL LOCATION QQ	SC	TP	RG	COUNTY	SPUD DATE	EFFECTIVE DATE

WELL 5 COMMENTS:

ACTION CODE	CURRENT ENTITY NO.	NEW ENTITY NO.	API NUMBER	WELL NAME	WELL LOCATION QQ	SC	TP	RG	COUNTY	SPUD DATE	EFFECTIVE DATE

WELL 5 COMMENTS:

ACTION CODES (See instructions on back of form)
- A - Establish new entity for new well (single well only)
- B - Add new well to existing entity (group or unit well)
- C - Re-assign well from one existing entity to another existing entity
- D - Re-assign well from one existing entity to a new entity
- E - Other (explain in comments section)

NOTE: Use COMMENT section to explain why each Action Code was selected.

RECEIVED
NOV 0 8 2006
DIV. OF OIL, GAS & MINING

Lana Nebeker
Signature
LANA NEBEKER

Production Analyst
Title

November 8, 2006
Date

FORM 3160-5
(September 2001)

UNITED STATES
DEPARTMENT OF THE INTERIOR
BUREAU OF LAND MANAGEMENT

FORM APPROVED
OMB No. 1004-0135
Expires January 31,2004

SUNDRY NOTICES AND REPORTS ON WELLS

Do not use this form for proposals to drill or to re-enter an abandoned well. Use Form 3160-3 (APD) for such proposals.

5. Lease Serial No.
USA UTU-64379

6. If Indian, Allottee or Tribe Name.

7. If Unit or CA/Agreement, Name and/or

1. Type of Well
☒ Oil Well ☐ Gas Well ☐ Other

8. Well Name and No.
Federal 8-22-9-16

2. Name of Operator
NEWFIELD PRODUCTION COMPANY

9. API Well No.
4301332959

3a. Address Route 3 Box 3630
Myton, UT 84052

3b. Phone *(include are code)*
435.646.3721

10. Field and Pool, or Exploratory Area
MONUMENT BUTTE

4. Location of Well *(Footage, Sec., T., R., M., or Survey Description)*
2200 FNL 618 FEL

SENE Section 22 T9S R16E

11. County or Parish, State
DUCHESNE, UT

12. CHECK APPROPRIATE BOX(ES) TO INIDICATE NATURE OF NOTICE, OR OTHER DATA

TYPE OF SUBMISSION	TYPE OF ACTION			
☐ Notice of Intent	☐ Acidize	☐ Deepen	☐ Production(Start/Resume)	☐ Water Shut-Off
☒ Subsequent Report	☐ Alter Casing	☐ Fracture Treat	☐ Reclamation	☐ Well Integrity
☐ Final Abandonment	☐ Casing Repair	☐ New Construction	☐ Recomplete	☒ Other Weekly Status Report
	☐ Change Plans	☐ Plug & Abandon	☐ Temporarily Abandon	
	☐ Convert to	☐ Plug Back	☐ Water Disposal	

13. Describe Proposed or Completed Operation (clearly state all pertinent details, including estimated starting date of any proposed work and approximate duration thereof. If the proposal is to deepen directionally or recomplete horizontally, give subsurface locations and measured and true vertical depths of all pertinent markers and zones. Attach the Bond under which the work will be performed or provide the Bond No. on file with BLM/BIA. Required subsequent reports shall be filed within 30 days following completion of the involved operations. If the operation results in a multiple completion or recompletion in a new interval, a Form 3160-4 shall be filed once testing has been completed. Final Abandonment Notices shall be filed only after all requirements, including reclamation, have been completed, and the operator has determined that the site is ready for final inspection.)

On 11/19/06 MIRU PattersonRig # 155. Set all equipment. Pressure test Kelly, TIW, Choke manifold, & Bop's to 2,000 psi. Test 8.625 csgn to 1,500 psi. Vernal BLM field, & Roosevelt DOGM office was notifed of test. PU BHA and tag cement @ 265'. Drill out cement & shoe. Drill a 7.875 hole with fresh water to a depth of 5850'. Lay down drill string & BHA. Open hole log w/ Dig/SP/GR log's TD to surface. PU & TIH with Guide shoe, shoe jt, float collar, 133 jt's of 5.5 J-55, 15.5# csgn. Set @ 5850.68' / KB. Cement with 322 sks cement mixed @ 11.0 ppg & 3.43 yld. The 450 sks cement mixed @ 14.4 ppg & 1.24 yld. Returned 30bbls of cement to reserve pit. Nipple down Bop's. Drop slips @90,000 #'s tension. Release rig @ 7:30 PM 11/24/06.

I hereby certify that the foregoing is true and correct *(Printed/ Typed)*
Don Bastian

Title
Drilling Foreman

Signature
Don Bastian

Date
11/24/2006

Approved by

Title

Date

Conditions of approval, if any, are attached. Approval of this notice does not warrant or certify that the applicant holds legal or equitable title to those rights in the subject lease which would entitle the applicant to conduct operations thereon.

Office

Title 18 U.S.C. Section 1001 and Title 43 U.S.C. Section 1212, make it a crime for any person knowingly and willfully to make to any department or agency of the United States any false, fictitious and fraudulent statements or representations as to any matter within its jurisdiction

(Instructions on reverse)

RECEIVED
NOV 29 2006
DIV. OF OIL, GAS & MINING

NEWFIELD PRODUCTION COMPANY - CASING & CEMENT REPORT

5 1/2" CASING SET AT 5850.68

Flt cllr @ 5828.67'

LAST CASING 8 5/8" SET A 322'

OPERATOR Newfield Production Company

DATUM 12' KB

WELL Federal 8-22-9-16

DATUM TO CUT OFF CASING 12'

FIELD/PROSPECT Monument Butte

DATUM TO BRADENHEAD FLANGE

CONTRACTOR & RIG # Patterson #155

TD DRILLER 5850 Loggers TD

HOLE SIZE 7 7/8"

LOG OF CASING STRING:

PIECES	OD	ITEM - MAKE - DESCRIPTION	WT / FT	GRD	THREAD	CONDT	LENGTH
		Landing Jt					14
		Short jt 3781.96 (5.86)					
132	5 1/2"	ETC LT & C casing	15.5#	J-55	8rd	A	5816.92
		Float collar					0.6
1	5 1/2"	ETC LT&C csg	15.5#	J-55	8rd	A	20.51
		GUIDE shoe			8rd	A	0.65

CASING INVENTORY BAL.	FEET	JTS
TOTAL LENGTH OF STRING	5852.68	134
LESS NON CSG. ITEMS	15.25	
PLUS FULL JTS. LEFT OUT	177.24	4
TOTAL	6014.67	137
TOTAL CSG. DEL. (W/O THRDS)	6014.67	137
TIMING	1ST STAGE	2nd STAGE
BEGIN RUN CSG.	11/25/2006	8:00 AM
CSG. IN HOLE	11/25/06/	11:00 AM
BEGIN CIRC	11/25/2006	11:10 AM
BEGIN PUMP CMT	11/25/2006	1:36 PM
BEGIN DSPL. CMT	11/25/2006	2:35 PM
PLUG DOWN	11/25/2006	2:58 PM

TOTAL LENGTH OF STRING	5852.68
LESS CUT OFF PIECE	14
PLUS DATUM TO T/CUT OFF CSG	12
CASING SET DEPTH	5850.68

} COMPARE

GOOD CIRC THRU JOB Yes

Bbls CMT CIRC TO SURFACE 30 BBLS

RECIPROCATED PIPE FOR THRUSTROKE NA

DID BACK PRES. VALVE HOLD ? Yes

BUMPED PLUG TO 1700 PSI

CEMENT USED — CEMENT COMPANY- B. J.

STAGE	# SX	CEMENT TYPE & ADDITIVES
1	322	Premlite II w/ 10% gel + 3 % KCL, 3#'s /sk CSE + 2# sk/kolseal + 1/4#'s/sk Cello Flake
		mixed @ 11.0 ppg W / 3.43 cf/sk yield
2	450	50/50 poz W/ 2% Gel + 3% KCL, .5%EC1,1/4# sk C.F. 2% gel. 3% SM mixed @ 14.4 ppg W/ 1.24 YLD

CENTRALIZER & SCRATCHER PLACEMENT — SHOW MAKE & SPACING

Centralizers - Middle first, top second & third. Then every third collar for a total of 20.

COMPANY REPRESENTATIVE Don Bastian DATE 11/24/2006

FORM 3160-5
(September 2001)

UNITED STATES
DEPARTMENT OF THE INTERIOR
BUREAU OF LAND MANAGEMENT

FORM APPROVED
OMB No. 1004-0135
Expires January 31,2004

SUNDRY NOTICES AND REPORTS ON WELLS

Do not use this form for proposals to drill or to re-enter an abandoned well. Use Form 3160-3 (APD) for such proposals.

5. Lease Serial No.
USA UTU-64379

6. If Indian, Allottee or Tribe Name.

7. If Unit or CA/Agreement, Name and/or

1. Type of Well
☒ Oil Well ☐ Gas Well ☐ Other

8. Well Name and No.
Federal 8-22-9-16

2. Name of Operator
NEWFIELD PRODUCTION COMPANY

9. API Well No.
4301332959

3a. Address Route 3 Box 3630
Myton, UT 84052

3b. Phone *(include are code)*
435.646.3721

10. Field and Pool, or Exploratory Area
MONUMENT BUTTE

4. Location of Well *(Footage, Sec., T., R., M., or Survey Description)*
2200 FNL 618 FEL

SENE Section 22 T9S R16E

11. County or Parish, State
DUCHESNE, UT

12. CHECK APPROPRIATE BOX(ES) TO INIDICATE NATURE OF NOTICE, OR OTHER DATA

TYPE OF SUBMISSION	TYPE OF ACTION			
☒ Notice of Intent	☐ Acidize	☐ Deepen	☐ Production(Start/Resume)	☐ Water Shut-Off
☐ Subsequent Report	☐ Alter Casing	☐ Fracture Treat	☐ Reclamation	☐ Well Integrity
☐ Final Abandonment	☐ Casing Repair	☐ New Construction	☐ Recomplete	☐ Other _____
	☐ Change Plans	☐ Plug & Abandon	☐ Temporarily Abandon	
	☐ Convert to	☐ Plug Back	☒ Water Disposal	

13. Describe Proposed or Completed Operation (clearly state all pertinent details, including estimated starting date of any proposed work and approximate duration thereof. If the proposal is to deepen directionally or recomplete horizontally, give subsurface locations and measured and true vertical depths of all pertinent markers and zones. Attach the Bond under which the work will be performed or provide the Bond No. on file with BLM/BIA. Required subsequent reports shall be filed within 30 days following completion of the involved operations. If the operation results in a multiple completion or recompletion in a new interval, a Form 3160-4 shall be filed once testing has been completed. Final Abandonment Notices shall be filed only after all requirements, including reclamation, have been completed, and the operator has determined that the site is ready for final inspection.)

Formation water is produced to a steel storage tank. If the production water meets quality guidelines, it is transported to the Ashley, Monument Butte, Jonah, and Beluga water injection facilities by company or contract trucks. Subsequently, the produced water is injected into approved Class II wells to enhance Newfield's secondary recovery project.

Water not meeting quality criteria, is disposed at Newfield's Pariette #4 disposal well (Sec. 7, T9S R19E) or at State of Utah approved surface disposal facilities.

Accepted by the Utah Division of Oil, Gas and Mining

FOR RECORD ONLY

I hereby certify that the foregoing is true and correct *(Printed/ Typed)*
Mandie Crozier

Title
Regulatory Specialist

Signature

Date
12/14/2006

Approved by

Title

Date

Conditions of approval, if any, are attached. Approval of this notice does not warrant or certify that the applicant holds legal or equitable title to those rights in the subject lease which would entitle the applicant to conduct operations thereon.

Office

Title 18 U.S.C. Section 1001 and Title 43 U.S.C. Section 1212, make it a crime for any person knowingly and willfully to make to any department or agency of the United States any false, fictitious and fraudulent statements or representations as to any matter within its jurisdiction

(Instructions on reverse)

RECEIVED
DEC 15 2006
DIV. OF OIL, GAS & MINING

STATE OF UTAH
DEPARTMENT OF NATURAL RESOURCES
DIVISION OF OIL, GAS AND MINING

5. LEASE DESIGNATION AND SERIAL NUMBER: USA UTU-64379

SUNDRY NOTICES AND REPORTS ON WELLS

6. IF INDIAN, ALLOTTEE OR TRIBE NAME:

Do not use this form for proposals to drill new wells, significantly deepen existing wells below current bottom-hole depth, reenter plugged wells, or to drill horizontal laterals. Use APPLICATION FOR PERMIT TO DRILL form for such proposals.

7. UNIT or CA AGREEMENT NAME:

1. TYPE OF WELL: OIL WELL [X] GAS WELL [ ] OTHER

8. WELL NAME and NUMBER: Federal 8-22-9-16

2. NAME OF OPERATOR: NEWFIELD PRODUCTION COMPANY

9. API NUMBER: 4301332959

3. ADDRESS OF OPERATOR: Route 3 Box 3630 CITY Myton STATE UT ZIP 84052 PHONE NUMBER 435.646.3721

10. FIELD AND POOL, OR WILDCAT: MONUMENT BUTTE

4. LOCATION OF WELL:

FOOTAGES AT SURFACE: 2200 FNL 618 FEL

COUNTY: DUCHESNE

OTR/OTR. SECTION. TOWNSHIP. RANGE. MERIDIAN: SENE, 22, T9S, R16E

STATE: UT

11. CHECK APPROPRIATE BOXES TO INDICATE NATURE OF NOTICE, REPORT, OR OTHER DATA

TYPE OF SUBMISSION	TYPE OF ACTION		
[ ] NOTICE OF INTENT (Submit in Duplicate)	[ ] ACIDIZE	[ ] DEEPEN	[ ] REPERFORATE CURRENT FORMATION
Approximate date work will	[ ] ALTER CASING	[ ] FRACTURE TREAT	[ ] SIDETRACK TO REPAIR WELL
	[ ] CASING REPAIR	[ ] NEW CONSTRUCTION	[ ] TEMPORARITLY ABANDON
	[ ] CHANGE TO PREVIOUS PLANS	[ ] OPERATOR CHANGE	[ ] TUBING REPAIR
	[ ] CHANGE TUBING	[ ] PLUG AND ABANDON	[ ] VENT OR FLAIR
[X] SUBSEQUENT REPORT (Submit Original Form Only)	[ ] CHANGE WELL NAME	[ ] PLUG BACK	[ ] WATER DISPOSAL
Date of Work Completion:	[ ] CHANGE WELL STATUS	[ ] PRODUCTION (START/STOP)	[ ] WATER SHUT-OFF
	[ ] COMMINGLE PRODUCING FORMATIONS	[ ] RECLAMATION OF WELL SITE	[X] OTHER: - Weekly Status Report
12/28/2006	[ ] CONVERT WELL TYPE	[ ] RECOMPLETE - DIFFERENT FORMATION	

12. DESCRIBE PROPOSED OR COMPLETED OPERATIONS. Clearly show all pertinent details including dates, depths, volumes, etc.

Status report for time period 12/05/06 - 12/13/06

Subject well had completion procedures intiated in the Green River formation on 12-05-06 without the use of a service rig over the well. A cement bond log was run and a total of four Green River intervals were perforated and hydraulically fracture treated with 20/40 mesh sand. Perforated intervals are as follows: Stage #1 (5530'-5550'); Stage #2 (4914'-4926')Stage #3 (4742'-4751'); Stage #4 (4577'-4585'). All perforations, were 4 JSPF. Composite flow-through frac plugs were used between stages. Fracs were flowed back through chokes. A service rig was moved over the well on 12-13-2006. Bridge plugs were drilled out and well was cleaned to 5829'. Zones were swab tested for sand cleanup. A new 1 1/2" bore rod pump was run in well on sucker rods. Well was placed on production via rod pump on 12-13-2006.

NAME (PLEASE PRINT) Jentri Park TITLE Production Clerk

SIGNATURE Jentri Park DATE 12/28/2006

(This space for State use only)

RECEIVED
JAN 02 2007
DIV. OF OIL, GAS & MINING

FORM 3160-4
(July 1992)

SUBMIT IN DUPLICATE* (See other instructions ons reverse side)

FORM APPROVED
OMB NO. 1004-0137
Expires: February 28, 1995

UNITED STATES
DEPARTMENT OF THE INTERIOR
BUREAU OF LAND MANAGEMENT

5. LEASE DESIGNATION AND SERIAL NO.: UTU-64379

WELL COMPLETION OR RECOMPLETION REPORT AND LOG*

6. IF INDIAN, ALLOTTEE OR TRIBE NAME: NA

1a. TYPE OF WORK: OIL WELL [X] GAS WELL [ ] DRY [ ] Other

7. UNIT AGREEMENT NAME: Federal

1b. TYPE OF WELL: NEW WELL [X] WORK OVER [ ] DEEPEN [ ] PLUG BACK [ ] DIFF RESVR. [ ] Other

8. FARM OR LEASE NAME, WELL NO.: Federal 8-22-9-16

2. NAME OF OPERATOR: Newfield Exploration Company

9. WELL NO.: 43-013-32959

3. ADDRESS AND TELEPHONE NO.: 1401 17th St. Suite 1000 Denver, CO 80202

10. FIELD AND POOL OR WILDCAT: Monument Butte

4. LOCATION OF WELL (Report locations clearly and in accordance with any State requirements.*)
At Surface: 2200' FNL & 618' FEL (SE/NE) Sec. 22, T9S, R16E
At top prod. Interval reported below
At total depth

11. SEC., T., R., M., OR BLOCK AND SURVEY OR AREA: Sec. 22, T9S, R16E

14. API NO.	DATE ISSUED	12. COUNTY OR PARISH	13. STATE
43-013-32959	01/26/06	Duchesne	UT

15. DATE SPUDDED	16. DATE T.D. REACHED	17. DATE COMPL. (Ready to prod.)	18. ELEVATIONS (DF, RKB, RT, GR, ETC.)*	19. ELEV. CASINGHEAD
11/19/06	11/24/06	12/13/06	5779' GL 5791' KB	

20. TOTAL DEPTH, MD & TVD	21. PLUG BACK T.D., MD & TVD	22. IF MULTIPLE COMPL., HOW MANY*	23. INTERVALS DRILLED BY	ROTARY TOOLS	CABLE TOOLS
5850'	5829'		------>	X	

24. PRODUCING INTERVAL(S), OF THIS COMPLETION--TOP, BOTTOM, NAME (MD AND TVD)*: Green River 4577'-5550'

25. WAS DIRECTIONAL SURVEY MADE: No

26. TYPE ELECTRIC AND OTHER LOGS RUN: Dual Induction Guard, SP, Compensated Density, Compensated Neutron, GR, Caliper, Cement Bond Log

27. WAS WELL CORED: No

23. CASING RECORD (Report all strings set in well)

CASING SIZE/GRADE	WEIGHT, LB./FT.	DEPTH SET (MD)	HOLE SIZE	TOP OF CEMENT, CEMENTING RECORD	AMOUNT PULLED
8-5/8" - J-55	24#	323'	12-1/4"	To surface with 160 sx Class "G" cmt	
5-1/2" - J-55	15.5#	5851'	7-7/8"	322 sx Premlite II and 450 sx 50/50 Poz	

29. LINER RECORD

SIZE	TOP (MD)	BOTTOM (MD)	SACKS CEMENT*	SCREEN (MD)

30. TUBING RECORD

SIZE	DEPTH SET (MD)	PACKER SET (MD)
2-7/8"	EOT @ 5629'	TA @ 5530'

31. PERFORATION RECORD (Interval, size and number)

INTERVAL	SIZE	SPF/NUMBER
(CP4) 5530'-5550'	.46"	4/80
(A1) 4914'-4926'	.43"	4/48
(B2) 4742'-4751'	.43"	4/36
(C2) 4577'-4585'	.43"	4/32

32. ACID, SHOT, FRACTURE, CEMENT SQUEEZE, ETC.

DEPTH INTERVAL (MD)	AMOUNT AND KIND OF MATERIAL USED
5530'-5550'	Frac w/ 30,245# 20/40 sand in 381 bbls fluid
4914'-4926'	Frac w/ 70,951# 20/40s and in 533 bbls fluid
4742'-4751'	Frac w/ 29,729# 20/40 sand in 414 bbls fluid
4577'-4585'	Frac w/ 26,560# 20/40s and in 342 bbls fluid

33.* PRODUCTION

DATE FIRST PRODUCTION	PRODUCTION METHOD (Flowing, gas lift, pumping--size and type of pump)	WELL STATUS (Producing or shut-in)
12/13/06	2-1/2" x 1-1/2" x 14' RHAC SM Plunger Pump	PRODUCING

DATE OF TEST	HOURS TESTED	CHOKE SIZE	PROD'N. FOR TEST PERIOD	OIL--BBLS.	GAS--MCF.	WATER--BBL.	GAS-OIL RATIO
10 day ave			----->	35	0	7	0

FLOW. TUBING PRESS.	CASING PRESSURE	CALCULATED 24-HOUR RATE	OIL-BBL.	GAS--MCF.	WATER--BBL.	OIL GRAVITY-API (CORR.)
		----->				

34. DISPOSITION OF GAS (Sold, used for fuel, vented, etc.): Sold & Used for Fuel

TEST WITNESSED BY

RECEIVED
JAN 08 2007

35. LIST OF ATTACHMENTS

36. I hereby certify that the foregoing and attached information is complete and correct as determined from all available records

SIGNED: Jentri Park TITLE: Production Clerk DATE: 1/4/2007

JP

*(See Instructions and Spaces for Additional Data on Reverse Side)

Title 18 U.S.C. Section 1001, makes it a crime for any person knowingly and willfully to make to any department or agency of the United States any false, fictitious or fraudulent statements or representations as to any matter within its jurisdiction.

37. SUMMARY OF POROUS ZONES: (Show all important zones of porosity and contents thereof; cored intervals, and all drill-stem, tests, including depth interval tested, cushion used, time tool open, flowing and shut-in pressures, and recoveries);

FORMATION	TOP	BOTTOM	DESCRIPTION, CONTENTS, ETC.
			Well Name **Federal 8-22-9-16**

38. GEOLOGIC MARKERS

NAME	TOP MEAS. DEPTH	TOP TRUE VERT. DEPTH
Garden Gulch Mkr	3470'	
Garden Gulch 1	3680'	
Garden Gulch 2	3788'	
Point 3 Mkr	4030'	
X Mkr	4299'	
Y-Mkr	4332'	
Douglas Creek Mkr	4450'	
BiCarbonate Mkr	4682'	
B Limestone Mkr	4786'	
Castle Peak	5315'	
Basal Carbonate	5757'	
Total Depth (LOGGERS	5857'	

STATE OF UTAH
DEPARTMENT OF NATURAL RESOURCES
DIVISION OF OIL, GAS, AND MINING

FORM 9

5.LEASE DESIGNATION AND SERIAL NUMBER: UTU-64379

SUNDRY NOTICES AND REPORTS ON WELLS

Do not use this form for proposals to drill new wells, significantly deepen existing wells below current bottom-hole depth, reenter plugged wells, or to drill horizontal laterals. Use APPLICATION FOR PERMIT TO DRILL form for such proposals.

6. IF INDIAN, ALLOTTEE OR TRIBE NAME:

7.UNIT or CA AGREEMENT NAME: GMBU (GRRV)

1. TYPE OF WELL Oil Well

8. WELL NAME and NUMBER: FEDERAL 8-22-9-16

2. NAME OF OPERATOR: NEWFIELD PRODUCTION COMPANY

9. API NUMBER: 43013329590000

3. ADDRESS OF OPERATOR: Rt 3 Box 3630 , Myton, UT, 84052

PHONE NUMBER: 435 646-4825 Ext

9. FIELD and POOL or WILDCAT: MONUMENT BUTTE

4. LOCATION OF WELL
FOOTAGES AT SURFACE: 2200 FNL 0618 FEL
QTR/QTR, SECTION, TOWNSHIP, RANGE, MERIDIAN: Qtr/Qtr: SENE Section: 22 Township: 09.0S Range: 16.0E Meridian: S

COUNTY: DUCHESNE

STATE: UTAH

11. CHECK APPROPRIATE BOXES TO INDICATE NATURE OF NOTICE, REPORT, OR OTHER DATA

TYPE OF SUBMISSION

- ☐ NOTICE OF INTENT — Approximate date work will start:
- ✓ SUBSEQUENT REPORT — Date of Work Completion: 7/3/2014
- ☐ SPUD REPORT — Date of Spud:
- ☐ DRILLING REPORT — Report Date:

TYPE OF ACTION

☐ ACIDIZE	☐ ALTER CASING	☐ CASING REPAIR
☐ CHANGE TO PREVIOUS PLANS	☐ CHANGE TUBING	☐ CHANGE WELL NAME
✓ CHANGE WELL STATUS	☐ COMMINGLE PRODUCING FORMATIONS	✓ CONVERT WELL TYPE
☐ DEEPEN	☐ FRACTURE TREAT	☐ NEW CONSTRUCTION
☐ OPERATOR CHANGE	☐ PLUG AND ABANDON	☐ PLUG BACK
☐ PRODUCTION START OR RESUME	☐ RECLAMATION OF WELL SITE	☐ RECOMPLETE DIFFERENT FORMATION
☐ REPERFORATE CURRENT FORMATION	☐ SIDETRACK TO REPAIR WELL	☐ TEMPORARY ABANDON
☐ TUBING REPAIR	☐ VENT OR FLARE	☐ WATER DISPOSAL
☐ WATER SHUTOFF	☐ SI TA STATUS EXTENSION	☐ APD EXTENSION
☐ WILDCAT WELL DETERMINATION	✓ OTHER	OTHER: New Perforations

12. DESCRIBE PROPOSED OR COMPLETED OPERATIONS. Clearly show all pertinent details including dates, depths, volumes, etc.

The subject well has been converted from a producing oil well to an injection well on 07/03/2014. New intervals perforated, GB6 sands - 3949-3974' 3 JSPF. On 07/01/2014 Chris Jensen with the State of Utah DOGM was contacted concerning the initial MIT on the above listed well. On 07/03/2014 the casing was pressured up to 1511 psig and charted for 30 minutes with no pressure loss. The well was not injecting during the test. The tubing pressure was 0 psig during the test. There was not an State representative available to witness the test.

Accepted by the Utah Division of Oil, Gas and Mining
Date: August 21, 2014
By:

NAME (PLEASE PRINT)	PHONE NUMBER	TITLE
Lucy Chavez-Naupoto	435 646-4874	Water Services Technician

SIGNATURE	DATE
N/A	7/25/2014

RECEIVED: Jul. 25, 2014

Mechanical Integrity Test
Casing or Annulas Pressure Test

Newfield Production Company
Rt. 3 Box 3630
Myton, UT 84052
435-646-3721

Witness: _____ Date: 7/3/2014 Time: 11:15 A.M.

Test Conducted by: Everett Unruh

Others Present: _____

Well:	Federal 8-22-9-16	Field:	Monument Butte
Well Location:	SENE Sec 22 T9S R16E Duchesne County, UT	API No:	43-013-32959

Time	Casing Pressure	
0 min	1510	psig
5	1510	psig
10	1510	psig
15	1510	psig
20	1510	psig
25	1510	psig
30 min	1511	psig
35		psig
40		psig
45		psig
50		psig
55		psig
60 min		psig

Tubing Pressure: 0 psig

Result: Pass Fail

Signature of Witness: _____

Signature of Person Conducting Test: Everett Unruh

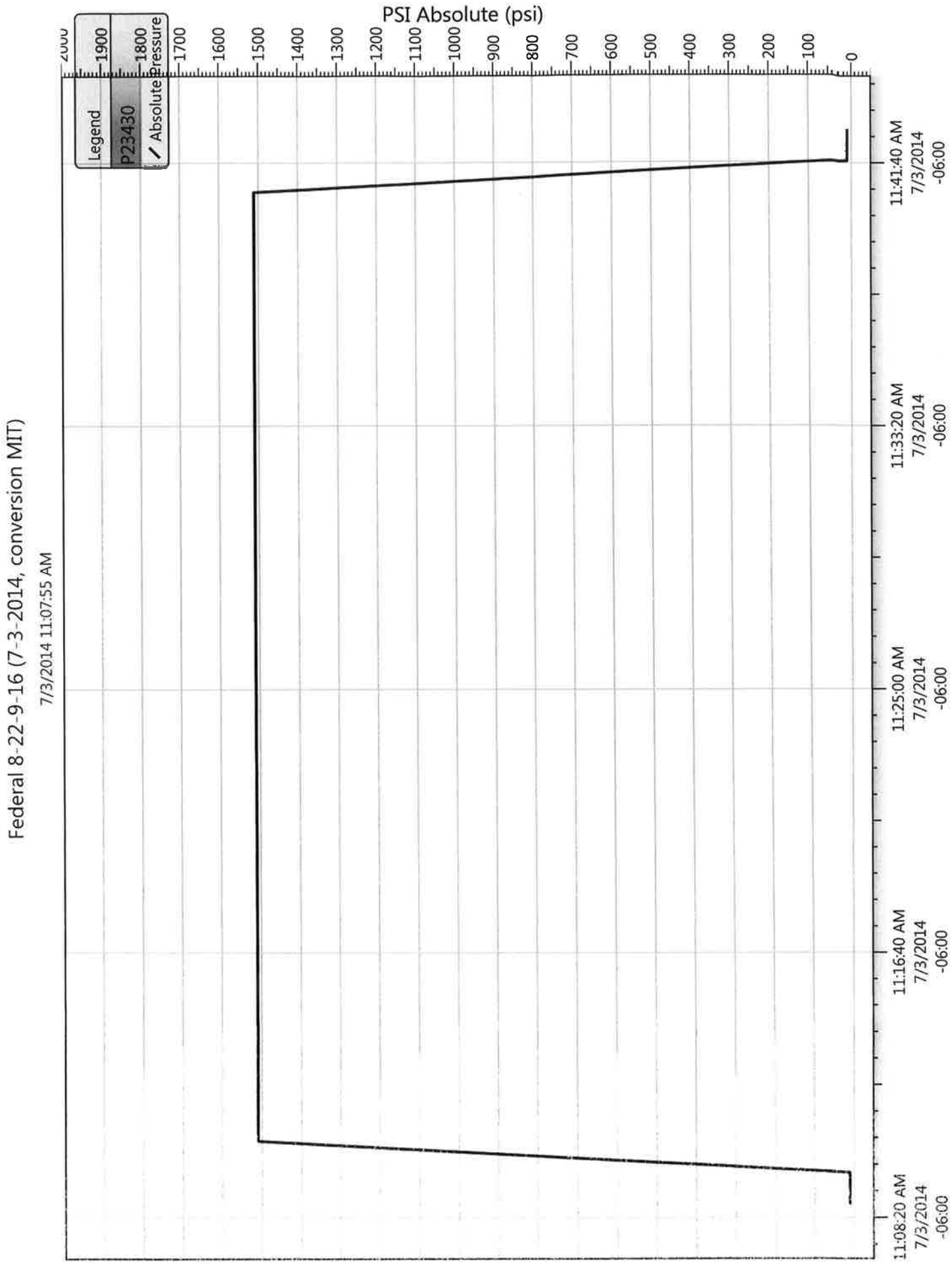
Federal 8-22-9-16 (7-3-2014, conversion MIT)
7/3/2014 11:07:55 AM
PSI Absolute (psi)
2000
1900
1800
1700
1600
1500
1400
1300
1200
1100
1000
900
800
700
600
500
400
300
200
100
0
Legend
P23430
Absolute Pressure
11:08:20 AM 7/3/2014 -06:00
11:16:40 AM 7/3/2014 -06:00
11:25:00 AM 7/3/2014 -06:00
11:33:20 AM 7/3/2014 -06:00
11:41:40 AM 7/3/2014 -06:00

NEWFIELD

Job Detail Summary Report

Well Name: Federal 8-22-9-16

Jobs

Primary Job Type	Job Start Date	Job End Date
Conversion	6/30/2014	7/3/2014

Daily Operations

Report Start Date	Report End Date	24hr Activity Summary
6/30/2014	7/1/2014	MIRUSU/pull rods & pump. Pull tbg

Start Time	End Time	Comment
00:00	04:00	SDFN
04:00	05:00	Crew travel & safety mtg
05:00	06:00	RU Western Well Services Rig #9
06:00	08:30	pump 60 bbls dwn csg @ 250f. PU on rods, 18k over string wt, unseat pump, flush tbg w/30bbls @ 250f. Reseat pump, fill tbg w/5bbls. test tbg to 3000psi-good test. LD polish rod.
08:30	09:30	Wait on Runners to deliver empty rod trailer to LD rods.
09:30	12:00	LD rod string, 100-3/4" 4 pers, RU HO, flush tbg w/30bbls @ 250f, cont. LD rods, 87-3/4" plain, 29-3/4"4pers, 6-wt bars & pump. (Note: wt bars have scale build up).
12:00	16:30	XO to tbg equip. ND WH, PU on tbg, TAC not set, NU BOPs, RU workfloor & tbg Eqp. TOOH tallying tbg and breaking collars. 123 jts, leave 54 jts in hole for HO to pump 50 bbls dwn tbg by 7am to warm up hole for wireline. EOT @ 1700'. SWIFN
16:30	17:30	Crew travel
17:30	00:00	SDFN

Report Start Date	Report End Date	24hr Activity Summary
7/1/2014	7/2/2014	RIH w/bit & scraper. Set plug, NU/test frac stack. Perf/breakdown

Start Time	End Time	Comment
00:00	06:00	SDFN
06:00	07:00	Crew travel & safety mtg
07:00	08:30	RU HO, flush tbg w/50bbls fresh wtr @ 250f, cont. LD extra tbg onto trailer.
08:30	09:30	RU Extreme wireline. RIH w/4 3/4" gauge ring stacked out @ 3050'. POOH RD wireline.
09:30	12:00	MU & RIH w/Slaugh's 5 1/2" scraper 127 jts to 4100'. RU HO, flush tbg w/30 bbls @ 250f, LD 4 jts. TOOH w/scraper.
12:00	13:00	RU wireline, RIH set Weatherford RBP @ 4128', POOH, RD wireline.
13:00	14:15	RD tbg works & floor, ND pipe rmas and 3k WH. NU new 5k WH, blind rams and frac valve.
14:15	15:30	RU B&C Quicktest. PSI test csg/plug/frac valve & BOPs. Good tests. RD
15:30	16:15	RU wireline, RIH w/perf gun. Perforate GB6 @ 3949-50', 3966-67', 3971-74'.
16:15	17:00	RU HO, pressure up csg. Broke @ 4100# with injection rate of .25 bpm @ 3100#. RD HO. SWIFN
17:00	18:00	Crew travel

Sundry Number: 53812 API Well Number: 4301332959000

NEWFIELD

Job Detail Summary Report

Well Name: Federal 8-22-9-16

Start Time	End Time	Comment
18:00	00:00	SDFN

Report Start Date	Report End Date	24hr Activity Summary
7/2/2014	7/3/2014	frac/flowback, retrieve plug

Start Time	End Time	Comment
00:00	06:30	SDFN
06:30	07:45	Finish Ru Nabors frac crew
07:45	08:00	Location safety mtg, pre-frac
08:00	08:15	PSI test all frac lines & equipment
08:15	09:15	Stage #1,GB6 sands. 140 psi on well. Frac GB6 w/27,580#s of 20/40 White sand in 170 bbls 17# Crosslinked fluid. Broke @ 3890 psi @ 1.8 BPM. Treated w/ ave pressure of 3404 psi @ ave rate of 18.5 BPM. ISDP 2179 psi. FG=.98 5 min SIP 1758 psi, 10 min SIP 1611 psi, 15 min SIP 1560 psi. Leave pressure on well. 480 total BWTR.
09:15	10:30	Open well to flowback tank @ 3bpm. Flow til dead. Returned 185bbl. ND frac valve, NU pipe rams.
10:30	13:30	MU & RIH w/132 jts, tag fill 30' above RBP, circ dwn to plug, circ well bore cleqn, latch onto plug, release RBP, LD 9 jts
13:30	15:30	TOOH 123 jts, wet all the way, LD plug,
15:30	17:00	MU & RIH w/injection BHA, 2 3/8" re-entry guide, 2 3/8"x1.87 XN profile nipple, 4'x2 3/8" J55 tbg sub, XO, Arrow set 1 pkr, on-off tool, 2 7/8" PSN, 73 jts tbg. SWIFN EOT @ 2305'
17:00	18:00	Crew travel
18:00	19:00	WWS safety mtg
19:00	00:00	SDFN

Report Start Date	Report End Date	24hr Activity Summary
7/3/2014	7/4/2014	RT tbg, RIH w/injection string, Conduct MIT

Start Time	End Time	Comment
00:00	06:00	SDFN
06:00	07:00	Crew travel & safety mtg
07:00	09:30	Cont TIH w/ PKR RU HO pump 10bbl pad drop SV fill tbg w/ 22bbls pres up tbg to 3000psi watch 30mins no lose tbg test good bleed off pres RU sandline RIH retrieve SV @3895' POOH RD sandline.

Sundry Number: 53812 API Well Number: 4301332959000

NEWFIELD

Job Detail Summary Report

Well Name: Federal 8-22-9-16

Start Time	End Time	Comment
09:30	12:00	09:30am to 12:00pm RD work floor ND frac stack pump 65bbls pkr fluid PU on tbg set PKR C.E. @3902' w/ 15,000 tension NU 5K injection tree pres up csg to 1500psi watch 30mins lost 100psi pres back up to 1500psi watch 30mins no lose RU MIT unit test 30 mins good RDMO. On 07/07/2014 Chris Jensen with the State of Utah DOGM was contacted concerning the initial MIT on the above listed well. On 07/07/2014 the casing was pressured up to 1511 psig and charted for 30 minutes with no pressure loss. The well was not injecting during the test. The tubing pressure was 0 psig during the test. There was not a State representative available to witness the test.
12:00	00:00	SDFN

Sundry Number: 53812 API Well Number: 4301332959000

NEWFIELD

Schematic

Well Name: Federal 8-22-9-16

Surface Legal Location	API/UWI	Well RC	Lease	State/Province	Field Name	County
22-9S-16E	43013329590000	500159036		Utah	GMBU CTB6	DUCHESNE

Spud Date	Rig Release Date	On Production Date	Original KB Elevation (ft)	Ground Elevation (ft)	Total Depth All (TVD) (ftKB)	PBTD (All) (ftKB)
11/1/2006	11/24/2006	12/13/2006	5,791	5,779		Original Hole - 5,828.9

Most Recent Job

Job Category	Primary Job Type	Secondary Job Type	Job Start Date	Job End Date
Production / Workover	Conversion	OAP	6/30/2014	7/3/2014

TD: 5,857.0 Vertical - Original Hole, 7/23/2014 8:41:09 AM

MD (ftKB)	TVD (ftKB)	Incl (°)	DLS	Vertical schematic (actual)
			DLS (°...	
12.1				
60.0				
321.5				
322.5				1; Surface; 8 5/8 in; 8.097 in; 12-323 ftKB; 310.53 ft
3,896.0				2-1; Tubing; 2 7/8; 2.441; 12-3,896; 3,883.68
3,897.0				2-2; Pump Seating Nipple; 2 7/8; 2.441; 3,896-3,897; 1.10
3,899.0				2-3; On-Off Tool; 4 1/2; 2.441; 3,897-3,899; 1.94
3,905.8				2-4; Packer; 4 5/8; 2.441; 3,899-3,906; 7.03
3,906.5				2-5; Cross Over; 3.64; 2.441; 3,906-3,907; 0.55
3,910.8				2-6; Tubing; 2 3/8; 3,907-3,911; 4.15
3,911.7				2-7; Nipple; 2 3/8; 3,911-3,912; 1.10
3,912.1				2-8; Re-Entry Guide; 2 3/8; 3,912-3,912; 0.42
3,949.1				Perforated; 3,949-3,950; 7/1/2014
3,950.1				
3,965.9				Perforated; 3,966-3,967; 7/1/2014
3,966.9				
3,971.1				Perforated; 3,971-3,974; 7/1/2014
3,974.1				
4,577.1				Perforated; 4,577-4,585; 12/9/2006
4,585.0				
4,742.1				Perforated; 4,742-4,751; 12/9/2006
4,751.0				
4,914.0				Perforated; 4,914-4,926; 12/9/2006
4,925.9				
5,529.9				Perforated; 5,530-5,550; 12/6/2006
5,549.9				
5,829.1				
5,829.4				
5,850.1				
5,850.7				2; Production; 5 1/2 in; 4.950 in; 12-5,851 ftKB; 5,838.68 ft
5,857.0				

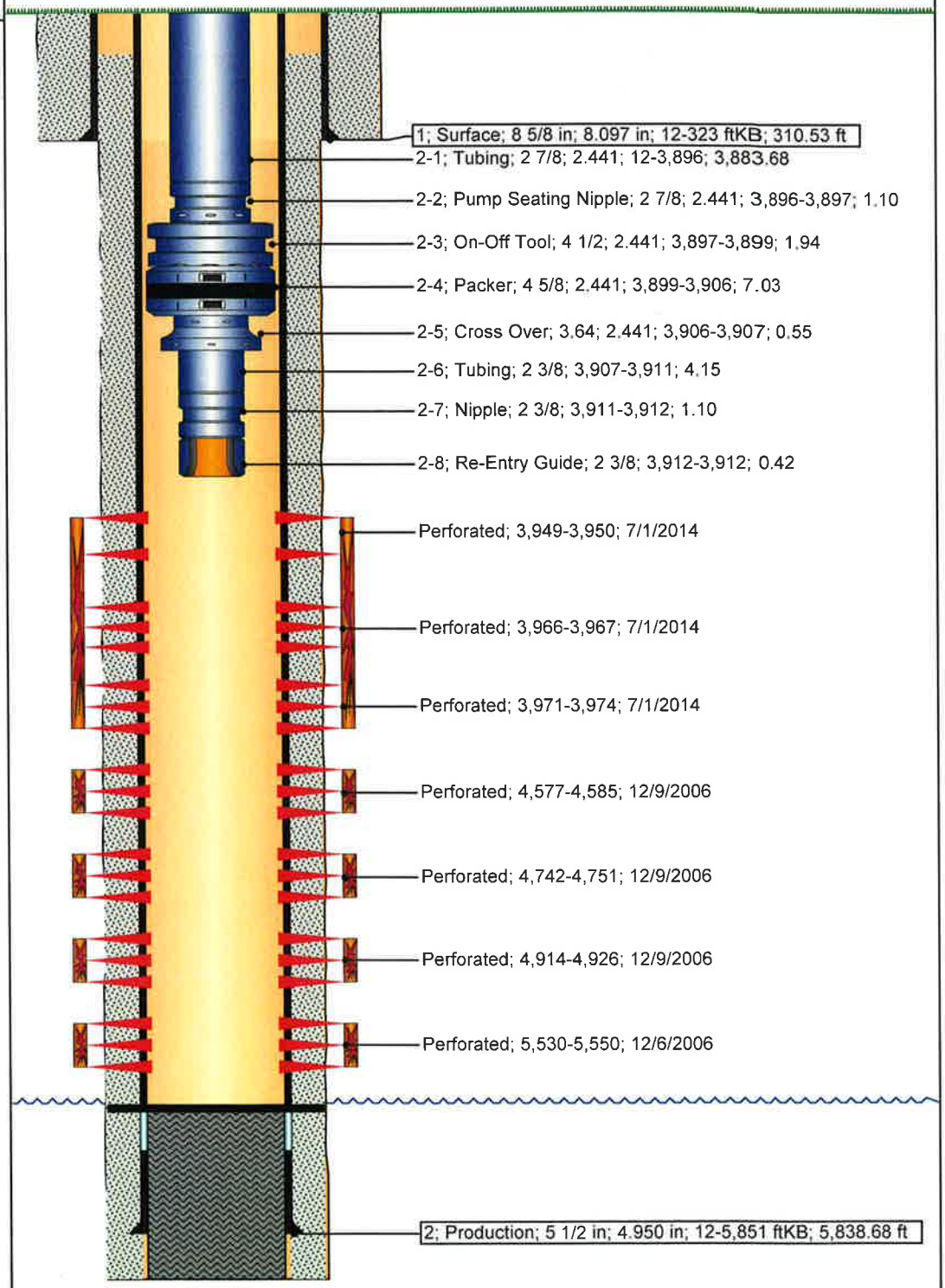

NEWFIELD

Newfield Wellbore Diagram Data
Federal 8-22-9-16

Surface Legal Location	API/UWI	Lease
22-9S-16E	43013329590000	

County	State/Province	Basin	Field Name
DUCHESNE	Utah	Uintah Basin	GMBU CTB6

Well Start Date	Spud Date	Final Rig Release Date	On Production Date
11/1/2006	11/1/2006	11/24/2006	12/13/2006

Original KB Elevation (ft)	Ground Elevation (ft)	Total Depth (ftKB)	Total Depth All (TVD) (ftKB)	PBTD (All) (ftKB)
5,791	5,779	5,857.0		Original Hole - 5,828.9

Casing Strings

Csg Des	Run Date	OD (in)	ID (in)	Wt/Len (lb/ft)	Grade	Set Depth (ftKB)
Surface	11/2/2006	8 5/8	8.097	24.00	J-55	323
Production	11/25/2006	5 1/2	4.950	15.50	J-55	5,851

Cement

String: Surface, 323ftKB 11/3/2006

Cementing Company	Top Depth (ftKB)	Bottom Depth (ftKB)	Full Return?	Vol Cement Ret (bbl)
BJ Services Company	12.0	322.5		

Fluid Description	Fluid Type	Amount (sacks)	Class	Estimated Top (ftKB)
2% CaCL2 + 1/4#/sk Cello-Flake	Lead	160	G	12.0

String: Production, 5,851ftKB 11/25/2006

Cementing Company	Top Depth (ftKB)	Bottom Depth (ftKB)	Full Return?	Vol Cement Ret (bbl)
BJ Services Company	60.0	5,857.0		

Fluid Description	Fluid Type	Amount (sacks)	Class	Estimated Top (ftKB)
10% gel + 3 % KCL, 3#'s /sk CSE + 2# sk/kolseal + 1/4#'s/sk Cello Flake	Lead	322	Premlite II	60.0
2% Gel + 3% KCL, .5%EC1,1/4# sk C.F. 2% gel. 3% SM	Tail	450	50/50 POZ	2,959.0

Tubing Strings

Tubing Description	Run Date	Set Depth (ftKB)
Tubing - Production	7/3/2014	3,912.2

Item Des	Jts	OD (in)	ID (in)	Wt (lb/ft)	Grade	Len (ft)	Top (ftKB)	Btm (ftKB)
Tubing	62	2 7/8	2.441	6.50	J-55	3,883.68	12.2	3,895.9
Pump Seating Nipple	1	2 7/8	2.441	6.50	J-55	1.10	3,895.9	3,897.0
On-Off Tool	1	4 1/2	2.441	6.50	J-55	1.94	3,897.0	3,899.0
Packer	1	4 5/8	2.441	6.50	J-55	7.03	3,899.0	3,906.0
Cross Over	1	3.635	2.441	6.50	J-55	0.55	3,906.0	3,906.5
Tubing	1	2 3/8		6.50	J-55	4.15	3,906.5	3,910.7
Nipple	1	2 3/8		6.50	J-55	1.10	3,910.7	3,911.8
Re-Entry Guide	1	2 3/8		6.50	J-55	0.42	3,911.8	3,912.2

Rod Strings

Rod Description	Run Date	Set Depth (ftKB)

Item Des	Jts	OD (in)	Wt (lb/ft)	Grade	Len (ft)	Top (ftKB)	Btm (ftKB)

Perforation Intervals

Stage#	Zone	Top (ftKB)	Btm (ftKB)	Shot Dens (shots/ft)	Phasing (°)	Nom Hole Dia (in)	Date
5	GB6 , Original Hole	3,949	3,950	3	120		7/1/2014
5	GB6 , Original Hole	3,966	3,967	3	120		7/1/2014
5	GB6 , Original Hole	3,971	3,974	3	120		7/1/2014
4	C SANDS, Original Hole	4,577	4,585	4	120		12/9/2006
3	B2 SANDS, Original Hole	4,742	4,751	4	120		12/9/2006
2	A1 SANDS, Original Hole	4,914	4,926	4	120		12/9/2006
1	CP4 SANDS, Original Hole	5,530	5,550	4	120		12/6/2006

Stimulations & Treatments

Stage#	ISIP (psi)	Frac Gradient (psi/ft)	Max Rate (bbl/min)	Max PSI (psi)	Total Clean Vol (bbl)	Total Slurry Vol (bbl)	Vol Recov (bbl)
1	1,960	0.79	25.0	2,176			
2	2,190	0.88	25.0	2,763			
3	1,950	0.84	25.0	4,200			
4	4,200		25.0	4,200			
5	2,179	0.982	23.4	4,139	480	500	480

Proppant

Stage#	Total Prop Vol Pumped (lb)	Total Add Amount
1		PROPPANT SAND 30245 lb
2		PROPPANT SAND 70951 lb
3		PROPPANT SAND 29729 lb
4		PROPPANT SAND 26560 lb
5	27,580	Main White Sand 27580 lbs

STATE OF UTAH
DEPARTMENT OF NATURAL RESOURCES
DIVISION OF OIL, GAS, AND MINING

FORM 9

5.LEASE DESIGNATION AND SERIAL NUMBER: UTU-64379

SUNDRY NOTICES AND REPORTS ON WELLS

Do not use this form for proposals to drill new wells, significantly deepen existing wells below current bottom-hole depth, reenter plugged wells, or to drill horizontal laterals. Use APPLICATION FOR PERMIT TO DRILL form for such proposals.

6. IF INDIAN, ALLOTTEE OR TRIBE NAME:

7.UNIT or CA AGREEMENT NAME: GMBU (GRRV)

1. TYPE OF WELL Water Injection Well

8. WELL NAME and NUMBER: FEDERAL 8-22-9-16

2. NAME OF OPERATOR: NEWFIELD PRODUCTION COMPANY

9. API NUMBER: 43013329590000

3. ADDRESS OF OPERATOR: Rt 3 Box 3630 , Myton, UT, 84052

PHONE NUMBER: 435 646-4825 Ext

9. FIELD and POOL or WILDCAT: MONUMENT BUTTE

4. LOCATION OF WELL
FOOTAGES AT SURFACE: 2200 FNL 0618 FEL
QTR/QTR, SECTION, TOWNSHIP, RANGE, MERIDIAN: Qtr/Qtr: SENE Section: 22 Township: 09.0S Range: 16.0E Meridian: S

COUNTY: DUCHESNE

STATE: UTAH

11. CHECK APPROPRIATE BOXES TO INDICATE NATURE OF NOTICE, REPORT, OR OTHER DATA

TYPE OF SUBMISSION

- ☐ NOTICE OF INTENT — Approximate date work will start:
- ✓ SUBSEQUENT REPORT — Date of Work Completion: 9/9/2014
- ☐ SPUD REPORT — Date of Spud:
- ☐ DRILLING REPORT — Report Date:

TYPE OF ACTION

☐ ACIDIZE	☐ ALTER CASING	☐ CASING REPAIR
☐ CHANGE TO PREVIOUS PLANS	☐ CHANGE TUBING	☐ CHANGE WELL NAME
✓ CHANGE WELL STATUS	☐ COMMINGLE PRODUCING FORMATIONS	✓ CONVERT WELL TYPE
☐ DEEPEN	☐ FRACTURE TREAT	☐ NEW CONSTRUCTION
☐ OPERATOR CHANGE	☐ PLUG AND ABANDON	☐ PLUG BACK
☐ PRODUCTION START OR RESUME	☐ RECLAMATION OF WELL SITE	☐ RECOMPLETE DIFFERENT FORMATION
☐ REPERFORATE CURRENT FORMATION	☐ SIDETRACK TO REPAIR WELL	☐ TEMPORARY ABANDON
☐ TUBING REPAIR	☐ VENT OR FLARE	☐ WATER DISPOSAL
☐ WATER SHUTOFF	☐ SI TA STATUS EXTENSION	☐ APD EXTENSION
☐ WILDCAT WELL DETERMINATION	☐ OTHER	OTHER:

12. DESCRIBE PROPOSED OR COMPLETED OPERATIONS. Clearly show all pertinent details including dates, depths, volumes, etc.

The above reference well was put on injection at 8:40 AM on 09/09/2014.

Accepted by the Utah Division of Oil, Gas and Mining
Date: September 15, 2014
By:

NAME (PLEASE PRINT)	PHONE NUMBER	TITLE
Lucy Chavez-Naupoto	435 646-4874	Water Services Technician

SIGNATURE	DATE
N/A	9/9/2014

RECEIVED: Sep. 09, 2014

GARY R. HERBERT
Governor

SPENCER J. COX
Lieutenant Governor

State of Utah

DEPARTMENT OF NATURAL RESOURCES
MICHAEL R. STYLER
Executive Director

Division of Oil, Gas and Mining
JOHN R. BAZA
Division Director

UNDERGROUND INJECTION CONTROL PERMIT

Cause No. UIC-421

Operator: Newfield Production Company

Well: Federal 8-22-9-16

Location: Section 22, Township 9 South, Range 16 East

County: Duchesne

API No.: 43-013-32959

Well Type: Enhanced Recovery (waterflood)

Stipulations of Permit Approval

1. Approval for conversion to Injection Well issued on June 16, 2014.
2. Maximum Allowable Injection Pressure: 1,919 psig
3. Maximum Allowable Injection Rate: (restricted by pressure limitation)
4. Injection Interval: Green River Formation (3,785' – 5,829')
5. Any subsequent wells drilled within a ½ mile radius of this well shall have production casing cement brought up to or above the top of the unitized interval for the Greater Monument Butte Unit.

Approved by: _____ 9/5/2014
John Rogers Date
Associate Director

JR/MLR/js
cc: Bruce Suchomel, Environmental Protection Agency
Bureau of Land Management, Verna
Jill Loyle, Newfield Production Company, Denver
Newfield Production Company, Myton
Duchesne County
Well File
N:\O&G Reviewed Docs\ChronFile\UIC

GARY R. HERBERT
Governor

SPENCER J. COX
Lieutenant Governor

State of Utah

DEPARTMENT OF NATURAL RESOURCES

MICHAEL R. STYLER
Executive Director

Division of Oil, Gas and Mining

JOHN R. BAZA
Division Director

June 16, 2014

Newfield Production Company
1001 Seventeenth Street, Suite 2000
Denver, CO 80202

Subject: Greater Monument Butte Unit Well: Federal 8-22-9-16, Section 22, Township 9 South, Range 16 East, SLBM, Duchesne County, Utah, API Well # 43-013-32959

Newfield Production Company:

Pursuant to Utah Admin. Code R649-5-3-3, the Division of Oil, Gas and Mining (the "Division") issues its administrative approval for conversion of the referenced well to a Class II injection well. Accordingly, the following stipulations shall apply for full compliance with this approval:

1. Compliance with all applicable requirements for the operation, maintenance and reporting for Underground Injection Control ("UIC") Class II injection wells pursuant to Utah Admin. Code R649-1 et seq.

2. Conformance with all conditions and requirements of the complete application submitted by Newfield Production Company.

3. A casing\tubing pressure test shall be conducted prior to commencing injection.

4. Pressure shall be monitored between the surface casing and the production casing on a regular basis. Any pressure changes observed shall be reported to the Division immediately.

5. The top of the injection interval shall be limited to a depth no higher than 3,785 feet in the Federal 8-22-9-16 well.

A final approval to commence injection will be issued upon satisfactory completion of the listed stipulations. If you have any questions regarding this approval or the necessary requirements, please contact Mark Reinbold at 801-538-5333 or Brad Hill at 801-538-5315.

Sincerely,

John Rogers
Associate Director

JR/MLR/js
cc: Bruce Suchomel, Environmental Protection Agency
Bureau of Land Management, Vernal
Duchesne County
Newfield Production Company, Myton
Well File
N:\O&G Reviewed Docs\ChronFile\UIC

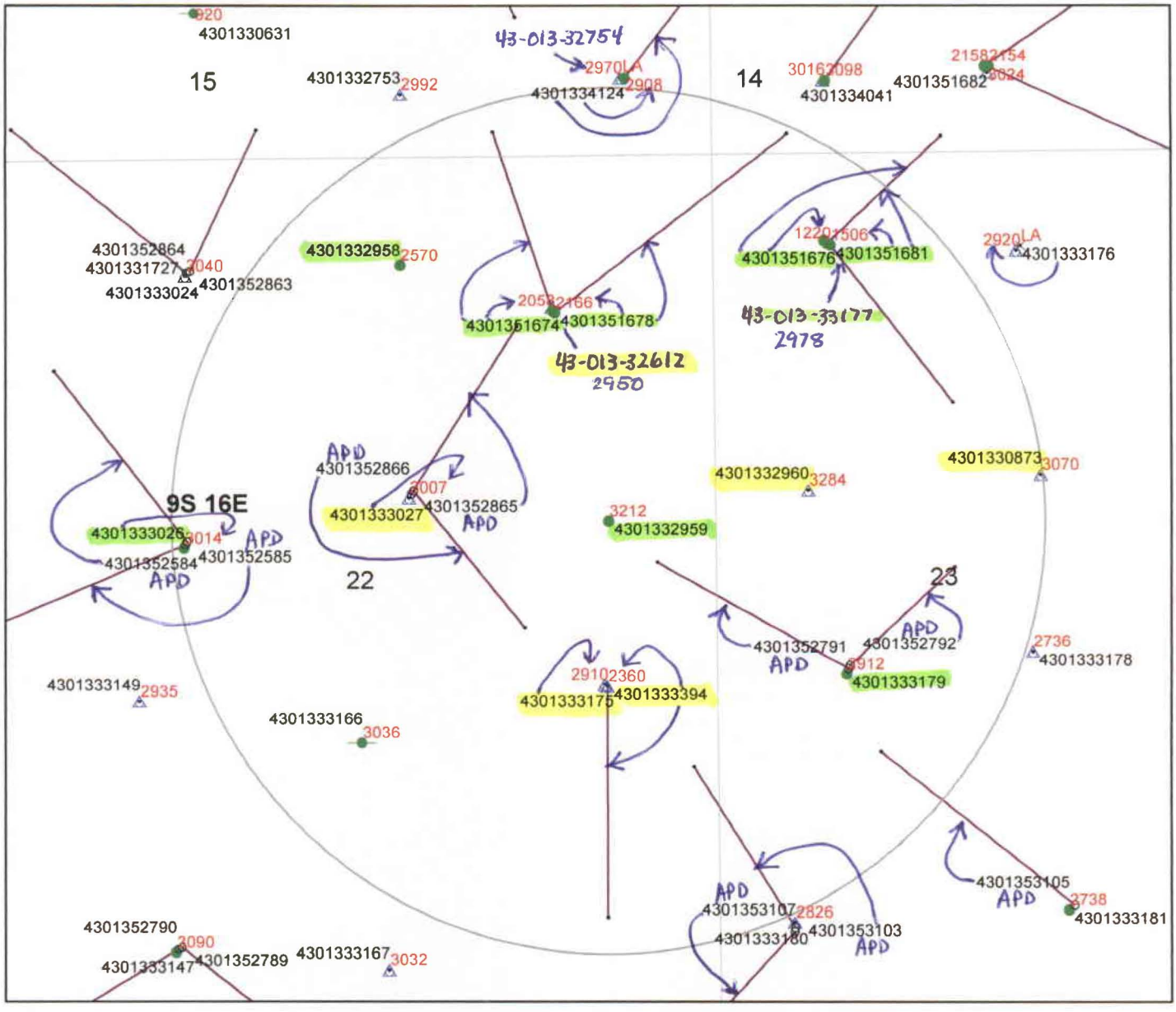

Cement Bond Tops
Federal 8-22-9-16
API #43-013-32959
UIC-421.4

(updated 8/21/2014)

0 0.05 0.1 0.2 0.3 0.4 Miles

N

Legend

Oil & Gas Well Type

- APD-Approved Permit
- DRL-Spudded (Drilling Commenced)
- GIW-Gas Injection Well
- GSW-Gas Storage Well
- LA-Location Abandoned
- LOC-New Location Well
- OPS-Drilling Operations Suspended
- PA-Pugged & Abandoned
- PGW-Producing Gas Well
- POW-Producing Oil Well in AOR
- RET-Returned APD
- SGW-Shut-in Gas Well
- SOW-Shut-in Oil Well
- TA-Temp Abandoned
- TW-Test Well
- WDW-Water Disposal Well
- WIW-WaterInjection Well in AOR
- WSW-Water Supply Well

4585 Depth to top of suitable cement bond

Well Bottom Hole Location

Oil & Gas Wells Hole Directional Path

Wells-CbltopsMaster 1-31-13

DNR Oil Gas Wells Buffer

County Boundaries

PLSS Sections

PLSS Townships

DIVISION OF OIL, GAS AND MINING
UNDERGROUND INJECTION CONTROL PROGRAM
PERMIT
STATEMENT OF BASIS

Applicant: Newfield Production Company **Well:** Federal 8-22-9-16

Location: 22/9S/16E **API:** 43-013-32959

Ownership Issues: The proposed well is located on BLM land. The well is located in the Greater Monument Butte Unit. Lands in the one-half mile radius of the well are administered by the BLM. The Federal Government is the mineral owner within the area of review (AOR). Newfield and other various individuals hold the leases in the unit. Newfield has provided a list of all surface, mineral and lease holders in the half-mile radius. Newfield is the operator of the Greater Monument Butte Unit. Newfield has submitted an affidavit stating that all owners and interest owners have been notified of their intent.

Well Integrity: The proposed well has surface casing set at 323 feet and has a cement top at the surface. A 5½ inch production casing is set at 5,851 feet. The cement bond log is somewhat problematic but appears to demonstrate adequate bond in this well up to about 3,212 feet or higher. A 2 7/8 inch tubing with a packer is proposed to be set at 4,527 feet. Higher perforations will be opened at a later date. A mechanical integrity test will be run on the well prior to injection. At the time of this revision (8/21/2014), based on surface locations, there are 9 producing wells, 6 injection wells, and 1 shut-in well in the AOR. One of the producing wells is directionally drilled, with a surface location inside the AOR and a bottom hole location outside the AOR. Also, there are 2 approved surface locations inside the AOR, from which directional wells will be drilled to bottom hole locations outside the AOR and 2 approved surface locations outside the AOR for bottom hole locations inside the AOR. All of the existing wells have evidence of adequate casing and cement for the proposed injection interval.

Ground Water Protection: As interpreted from the Utah Geological Survey's DOE Project-Uinta Basin Water Draft Map (Paul B. Anderson, December 2, 2011), the base of moderately saline water (3000-10,000 mg/l TDS) is at a depth of approximately 2600 feet. Injection shall be limited to the interval between 3,785 feet and 5,829 feet in the Green River Formation. Information submitted by Newfield indicates that the fracture gradient for the 8-22-9-16 well is 0.84 psi/ft., which was the lowest reported fracture gradient for the injection zone. The resulting minimum fracture pressure for the proposed injection interval is 1,919 psig. The requested maximum pressure is 1,919 psig. The anticipated average injection pressure is 1100 psig. Injection at this pressure should not initiate any new fractures or propagate existing fractures in the adjacent confining intervals. Any ground water present should be adequately protected.

Oil/Gas& Other Mineral Resources Protection: The Board of Oil, Gas & Mining approved the. Greater Monument Butte Unit on December 1, 2009. Correlative rights issues were addressed at this time. Previous reviews in this area indicate that other mineral resources in the area have been protected or are not at issue.

Bonding: Bonded with the BLM

Actions Taken and Further Approvals Needed: A notice of agency action has been sent to the Salt Lake Tribune and the Uinta Basin Standard. A casing/tubing pressure test will be required prior to injection. It is recommended that approval of this application be granted.

Note: Applicable technical publications concerning water resources in the general vicinity of this project have been reviewed and taken into consideration during the permit review process.

Reviewer(s): Mark Reinbold Date: 5/19/2014 (revised 8/21/2014)

4770 S. 5600 W.
P.O. BOX 704005
WEST VALLEY CITY, UTAH 84170
FED.TAX I.D.# 87-0217663
801-204-6910

The Salt Lake Tribune — MEDIAOne — Deseret News

PROOF OF PUBLICATION — CUSTOMER'S COPY

CUSTOMER NAME AND ADDRESS	ACCOUNT NUMBER	DATE
DIV OF OIL-GAS & MINING, Rose Nolton 1594 W NORTH TEMP #1210 P.O. BOX 145801 SALT LAKE CITY, UT 84114	9001402352	5/13/2014

RECEIVED MAY 15 2014 DIV OF OIL, GAS & MINING

ACCOUNT NAME	
DIV OF OIL-GAS & MINING,	
TELEPHONE	ADORDER# / I
8015385340	0000957536 /
SCHEDULE	
Start 05/09/2014	End 05/09/2014
CUST. REF. NO.	
CAUSE NO. UIC-421	
CAPTION	
BEFORE THE DIVISION OF OIL, GAS AND MINING DEPARTMENT OI	
SIZE	
82 Lines	2.00 COL
TIMES	RA
3	
MISC. CHARGES	AD CH
	TOTAL
	280.

BEFORE THE DIVISION OF OIL, GAS AND MINING
DEPARTMENT OF NATURAL RESOURCES
STATE OF UTAH
NOTICE OF AGENCY ACTION
CAUSE NO. UIC-421

IN THE MATTER OF THE APPLICATION OF NEWFIELD PRODUCTION COMPANY FOR ADMINISTRATIVE APPROVAL OF CERTAIN WELLS LOCATED IN SECTION 24, TOWNSHIP 9 SOUTH, RANGE 15 EAST, AND SECTIONS 22, 23, 28, AND 29, TOWNSHIP 9 SOUTH, RANGE 16 EAST, DUCHESNE COUNTY, UTAH, AS CLASS II INJECTION WELLS.

THE STATE OF UTAH TO ALL PERSONS INTERESTED IN THE ABOVE ENTITLED MATTER.

Notice is hereby given that the Division of Oil, Gas and Mining (the "Division") is commencing an informal adjudicative proceeding to consider the application of Newfield Production Company, 1001 17th Street, Suite 2000, Denver, Colorado 80202, telephone 303-893-0102, for administrative approval of the following wells located in Duchesne County, Utah, for conversion to Class II injection wells:

Greater Monument Butte Unit:
Ashley Federal 12-24R-9-15 well located in NW/4 SW/4, Section 24, Township 9 South, Range 15 East
API 43-013-15782
Federal 2-22-9-16 well located in NW/4 NE/4, Section 22 Township 9 South, Range 16 East
API 43-013-32958
Federal 6-22-9-16 well located in SE/4 NW/4, Section 22, Township 9 South, Range 16 East
API 43-013-33026
Federal 8-22-9-16 well located in SE/4 NE/4, Section 22, Township 9 South, Range 16 East
API 43-013-32959
Federal 14-22-9-16 well located in SE/4 SW/4, Section 22, Township 9 South, Range 16 East
API 43-013-33147
Federal 4-23-9-16 well located in NW/4 NW/4, Section 23, Township 9 South, Range 16 East
API 43-013-33177
Federal 2-28-9-16 well located in NW/4 NE/4, Section 28, Township 9 South, Range 16 East
API 43-013-33409
Federal 4-28-9-16 well located in NW/4 NW/4, Section 28, Township 9 South, Range 16 East
API 43-013-33407
Federal 2-29-9-16 well located in NW/4 NE/4, Section 29, Township 9 South, Range 16 East
API 43-013-33424

The proceeding will be conducted in accordance with Utah Admin. R649-10, Administrative Procedures.

Selected zones in the Green River Formation will be used for water injection. The maximum requested injection pressures and rates will be determined based on fracture gradient information submitted by Newfield Production Company.

Any person desiring to object to the application or otherwise intervene in the proceeding, must file a written protest or notice of intervention with the Division within fifteen days following publication of this notice. The Division's Presiding Officer for the proceeding is Brad Hill, Permitting Manager, at P.O. Box 145801, Salt Lake City, UT 84114-5801, phone number (801) 538-5340. If such a protest or notice of intervention is received, a hearing will be scheduled in accordance with the aforementioned administrative procedural rules. Protestants and/or interveners should be prepared to demonstrate at the hearing how this matter affects their interests.

Dated this 6th day of May, 2014.

STATE OF UTAH
DIVISION OF OIL, GAS & MINING
/s/
Brad Hill
Permitting Manager

957536 UPAXLP

AFFIDAVIT OF PUBLICATION

AS NEWSPAPER AGENCY COMPANY, LLC dba MEDIAONE OF UTAH LEGAL BOOKER, I CERTIFY
BEFORE THE DIVISION OF OIL, GAS AND MINING DEPARTMENT OF NATURAL RESOURCE ... **ON**
CAUSE NO. UIC-421 IN THE MATTER OF THE APPLICA FOR **DIV OF OIL-GAS & MINING,** W
COMPANY, LLC dba MEDIAONE OF UTAH, AGENT FOR THE SALT LAKE TRIBUNE AND DESERET
ENGLISH LANGUAGE WITH GENERAL CIRCULATION IN UTAH, AND PUBLISHED IN SALT LAKE ... UTAH.
NOTICE IS ALSO POSTED ON UTAHLEGALS.COM ON THE SAME DAY AS THE FIRST NEWSPAPER PUBLICATION DATE AND REMAINS ON UTAHLEGALS.COM INDEFINATELY. COMPLIES WITH UTAH DIGITAL SIGNATURE ACT UTAH CODE 46-2-101; 46-3-104.

PUBLISHED ON Start 05/09/2014 End 05/09/2014

SIGNATURE

DATE 5/13/2014

VIRGINIA CRAFT
NOTARY PUBLIC - STATE OF UTAH
My Comm. Exp. 01/12/2018
Commission # 672963

Virginia Craft
NOTARY SIGNATURE

THIS IS NOT A STATEMENT BUT A "PROOF OF PUBLICATION"
PLEASE PAY FROM BILLING STATEMENT

2250 | GGUICADMIN | GFH | 6131

AFFIDAVIT OF PUBLICATION

County of Duchesne,
STATE OF UTAH

I, Kevin Ashby on oath, say that I am the PUBLISHER of the Uintah Basin Standard, a weekly newspaper of general circulation, published at Roosevelt, State and County aforesaid, and that a certain notice, a true copy of which is hereto attached, was published in the full issue such newspaper for 1 consecutive issues, and that the first publication was on the 13 day of May, 2014, and that the last publication of such notice was in the issue of such newspaper dated the 13 day of May, 2014, and that said notice was published on Utahlegals.com on the same day as the first newspaper publication and the notice remained on Utahlegals.com until the end of the scheduled run.

Kevin Ashby
Publisher

Subscribed and sworn to before me on this

16 day of May, 2014

by Kevin Ashby.

Bonnie Parrish
Notary Public

BEFORE THE DIVISION OF OIL, GAS AND MINING DEPARTMENT OF NATURAL RESOURCES STATE OF UTAH NOTICE OF AGENCY ACTION CAUSE NO. UIC-421

IN THE MATTER OF THE APPLICATION OF NEWFIELD PRODUCTION COMPANY FOR ADMINISTRATIVE APPROVAL OF CERTAIN WELLS LOCATED IN SECTION 24, TOWNSHIP 9 SOUTH, RANGE 15 EAST, AND SECTIONS 22, 23, 28, AND 29, TOWNSHIP 9 SOUTH, RANGE 16 EAST, DUCHESNE COUNTY, UTAH, AS CLASS II INJECTION WELLS.

THE STATE OF UTAH TO ALL PERSONS INTERESTED IN THE ABOVE ENTITLED MATTER.

Notice is hereby given that the Division of Oil, Gas and Mining (the "Division") is commencing an informal adjudicative proceeding to consider the application of Newfield Production Company.

Selected zones in the Green River Formation will be used for water injection. The maximum requested injection pressures and rates will be determined based on fracture gradient information submitted by Newfield Production Company.

Any person desiring to object to the application or otherwise intervene in the proceeding, must file a written protest or notice of intervention with the Division within fifteen days following publication of this notice. The Division's Presiding Officer for the proceeding is Brad Hill, Permitting Manager, at P.O. Box 145801, Salt Lake City, UT 84114-5801, phone number (801) 538-5340. If such a protest or notice of intervention is received, a hearing will be scheduled in accordance with the aforementioned administrative procedural rules. Protestants and/or interveners should be prepared to demonstrate at the hearing how this matter affects their interests.

Dated this 6th day of May, 2014.

STATE OF UTAH
DIVISION OF OIL, GAS & MINING
Brad Hill
Permitting Manager

Published in the Uintah Basin Standard May 13, 2014.

sion 7 is conducting an informal adjudicative proceeding to consider the application of Newfield Production Company, 1001 17th Street, Suite 2000, Denver, Colorado 80202, telephone 303-893-0102, for administrative approval of the following wells located in Duchesne County, Utah, for conversion to Class II injection wells:

Greater Monument Butte Unit:

Ashley Federal 12-24R-9-15 well located in NW/4 SW/4, Section 24, Township 9 South, Range 15 East

API 43-013-15782

Federal 2-22-9-16 well located in NW/4 NE/4, Section 22 Township 9 South, Range 16 East

API 43-013-32958

Federal 6-22-9-16 well located in SE/4 NW/4, Section 22, Township 9 South, Range 16 East

API 43-013-33026

Federal 8-22-9-16 well located in SE/4 NE/4, Section 22, Township 9 South, Range 16 East

API 43-013-32959

Federal 14-22-9-16 well located in SE/4 SW/4, Section 22, Township 9 South, Range 16 East

API 43-013-33147

Federal 4-23-9-16 well located in NW/4 NW/4, Section 23, Township 9 South, Range 16 East

API 43-013-33177

Federal 2-28-9-16 well located in NW/4 NE/4, Section 28, Township 9 South, Range 16 East

API 43-013-33409

Federal 4-28-9-16 well located in NW/4 NW/4, Section 28, Township 9 South, Range 16 East

API 43-013-33407

Federal 2-29-9-16 well located in NW/4 NE/4, Section 29, Township 9 South, Range 16 East

API 43-013-33424

The proceeding will be conducted in accordance with Utah Admin. R649-10, Administrative Procedures.

42 (8)

BEFORE THE DIVISION OF OIL, GAS AND MINING
DEPARTMENT OF NATURAL RESOURCES
STATE OF UTAH
NOTICE OF AGENCY ACTION
CAUSE NO. UIC-421

IN THE MATTER OF THE APPLICATION OF NEWFIELD PRODUCTION COMPANY FOR ADMINISTRATIVE APPROVAL OF CERTAIN WELLS LOCATED IN SECTION 24, TOWNSHIP 9 SOUTH, RANGE 15 EAST, AND SECTIONS 22, 23, 28, AND 29, TOWNSHIP 9 SOUTH, RANGE 16 EAST, DUCHESNE COUNTY, UTAH, AS CLASS II INJECTION WELLS.

THE STATE OF UTAH TO ALL PERSONS INTERESTED IN THE ABOVE ENTITLED MATTER.

Notice is hereby given that the Division of Oil, Gas and Mining (the "Division") is commencing an informal adjudicative proceeding to consider the application of Newfield Production Company, 1001 17th Street, Suite 2000, Denver, Colorado 80202, telephone 303-893-0102, for administrative approval of the following wells located in Duchesne County, Utah, for conversion to Class II injection wells:

Greater Monument Butte Unit:
Ashley Federal 12-24R-9-15 well located in NW/4 SW/4, Section 24, Township 9 South, Range 15 East
API 43-013-15782
Federal 2-22-9-16 well located in NW/4 NE/4, Section 22 Township 9 South, Range 16 East
API 43-013-32958
Federal 6-22-9-16 well located in SE/4 NW/4, Section 22, Township 9 South, Range 16 East
API 43-013-33026
Federal 8-22-9-16 well located in SE/4 NE/4, Section 22, Township 9 South, Range 16 East
API 43-013-32959
Federal 14-22-9-16 well located in SE/4 SW/4, Section 22, Township 9 South, Range 16 East
API 43-013-33147
Federal 4-23-9-16 well located in NW/4 NW/4, Section 23, Township 9 South, Range 16 East
API 43-013-33177
Federal 2-28-9-16 well located in NW/4 NE/4, Section 28, Township 9 South, Range 16 East
API 43-013-33409
Federal 4-28-9-16 well located in NW/4 NW/4, Section 28, Township 9 South, Range 16 East
API 43-013-33407
Federal 2-29-9-16 well located in NW/4 NE/4, Section 29, Township 9 South, Range 16 East
API 43-013-33424

The proceeding will be conducted in accordance with Utah Admin. R649-10, Administrative Procedures.

Selected zones in the Green River Formation will be used for water injection. The maximum requested injection pressures and rates will be determined based on fracture gradient information submitted by Newfield Production Company.

Any person desiring to object to the application or otherwise intervene in the proceeding, must file a written protest or notice of intervention with the Division within fifteen days following publication of this notice. The Division's Presiding Officer for the proceeding is Brad Hill, Permitting Manager, at P.O. Box 145801, Salt Lake City, UT 84114-5801, phone number (801) 538-5340. If such a protest or notice of intervention is received, a hearing will be scheduled in accordance with the aforementioned administrative procedural rules. Protestants and/or interveners should be prepared to demonstrate at the hearing how this matter affects their interests.

Dated this 6th day of May, 2014.

STATE OF UTAH
DIVISION OF OIL, GAS & MINING

Brad Hill
Permitting Manager

Newfield Production Company

ASHLEY FEDERAL 12-24R-9-15, FEDERAL 2-22-9-16, FEDERAL 6-22-9-16, FEDERAL 8-22-9-16, FEDERAL 14-22-9-16, FEDERAL 4-23-9-16, FEDERAL 2-28-9-16, FEDERAL 4-28-9-16, FEDERAL 2-29-9-16

Cause No. UIC-421

Publication Notices were sent to the following:

Newfield Production Company
1001 17th Street, Suite 2000
Denver, CO 80202

Uintah Basin Standard
268 South 200 East
Roosevelt, UT 84066
via e-mail ubslegals@ubmedia.biz

Salt Lake Tribune
P O Box 45838
Salt Lake City, UT 84145
via e-mail naclegal@mediaoneutah.com

Vernal Office
Bureau of Land Management
170 South 500 East
Vernal, UT 84078

Duchesne County Planning
P O Box 317
Duchesne, UT 84021-0317

Bruce Suchomel
US EPA Region 8
MS 8P-W-GW
1595 Wynkoop Street
Denver, CO 80202-1129

Newfield Production Company
Rt 3 Box 3630
Myton, UT 84052

Jean Sweet

GARY R. HERBERT
Governor

SPENCER J. COX
Lieutenant Governor

State of Utah
DEPARTMENT OF NATURAL RESOURCES

MICHAEL R. STYLER
Executive Director

Division of Oil, Gas and Mining
JOHN R. BAZA
Division Director

May 8, 2014

Via e-mail: ubslegals@ubmedia.biz

Uintah Basin Standard
268 South 200 East
Roosevelt, UT 84066

Subject: Notice of Agency Action – Newfield Production Company Cause No. UIC-421

To whom it may concern:

Enclosed is a copy of the referenced Notice of Agency Action. Please publish the Notice, once only, as soon as possible. Please notify me via e-mail of the date it will be published. My e-mail address is: jsweet@utah.gov.

Please send proof of publication and billing to:

Division of Oil, Gas and Mining
PO Box 145801
Salt Lake City, UT 84114-5801

Sincerely,

Jean Sweet

Jean Sweet
Executive Secretary

Enclosure

[redacted]

Jean Sweet <jsweet@utah.gov>

Re: Notice of Agency Action Newfield Cause No. UIC-421

1 message

Cindy Kleinfelter <ckleinfelter@ubmedia.biz> Fri, May 9, 2014 at 12:49 PM
To: Jean Sweet <jsweet@utah.gov>

On 5/8/2014 10:39 AM, Jean Sweet wrote:

> To whom it may concern:
>
> Enclosed is a copy of the referenced Notice of Agency Action. Please publish the Notice, once only, as soon as possible. Please notify me via e-mail of the date it will be published. My e-mail address is: jsweet@utah.gov.
>
> Please send proof of publication and billing to:
>
> Division of Oil, Gas and Mining
>
> PO Box 145801
>
> Salt Lake City, UT 84114-5801
>
> Sincerely,
>
> –
> Jean Sweet
> Executive Secretary
> Utah Division of Oil, Gas and Mining
> 801-538-5329

I think I replied to this, but if not, it will publish May 13.
Cindy

GARY R. HERBERT
Governor

SPENCER J. COX
Lieutenant Governor

State of Utah
DEPARTMENT OF NATURAL RESOURCES

MICHAEL R. STYLER
Executive Director

Division of Oil, Gas and Mining
JOHN R. BAZA
Division Director

May 8, 2014

VIA E-MAIL naclegal@mediaoneutah.com

Salt Lake Tribune
P. O. Box 45838
Salt Lake City, UT 84145

Subject: Notice of Agency Action – Newfield Production Company Cause No. UIC-421

To whom it may concern:

Enclosed is a copy of the referenced Notice of Agency Action. Please publish the Notice, once only, as soon as possible. Please notify me via e-mail of the date it will be published. My e-mail address is: jsweet@utah.gov.

Please send proof of publication and billing for **account #9001402352** to:

Division of Oil, Gas and Mining
PO Box 145801
Salt Lake City, UT 84114-5801

Sincerely,

Jean Sweet

Jean Sweet
Executive Secretary

Enclosure

The Salt Lake Tribune MEDIAone Deseret News

Remit to: P.O. Box 704005
West Valley City, UT 84170

Order Confirmation for Ad #0000957536-01

Client	DIV OF OIL-GAS & MINING	**Payor Customer**	DIV OF OIL-GAS & MINING
Client Phone	801-538-5340	**Payor Phone**	801-538-5340
Account#	9001402352	**Payor Account**	9001402352
Address	1594 W NORTH TEMPLE STE 1210, SALT LAKE CITY UT 84116-3154 USA	**Payor Address**	1594 W NORTH TEMPLE STE 1210, SALT LAKE CITY UT 84116-3154
Fax	801-359-3940	**Ordered By**	**Acct. Exec**
EMail	juliecarter@utah.gov	Jean	kstowe

Total Amount	**$280.52**
Payment Amt	**$0.00**
Amount Due	**$280.52**

Tear Sheets	Proofs	Affidavits
0	0	1

Payment Method

PO Number CAUSE NO. UIC-421

Confirmation Notes:

Text: Jean

Ad Type	Ad Size	Color
Legal Liner	2.0 X 82 Li	<NONE>

Product	Placement	Position
Salt Lake Tribune::	Legal Liner Notice - 0998	998-Other Legal Notices
Scheduled Date(s):	5/9/2014	
Product	**Placement**	**Position**
Deseret News::	Legal Liner Notice - 0998	998-Other Legal Notices
Scheduled Date(s):	5/9/2014	
Product	**Placement**	**Position**
utahlegals.com::	utahlegals.com	utahlegals.com
Scheduled Date(s):	5/9/2014	

Ad Content Proof Actual Size

BEFORE THE DIVISION OF OIL, GAS AND MINING
DEPARTMENT OF NATURAL RESOURCES
STATE OF UTAH
NOTICE OF AGENCY ACTION
CAUSE NO. UIC-421

IN THE MATTER OF THE APPLICATION OF NEWFIELD PRODUCTION COMPANY FOR ADMINISTRATIVE APPROVAL OF CERTAIN WELLS LOCATED IN SECTION 24, TOWNSHIP 9 SOUTH, RANGE 15 EAST, AND SECTIONS 22, 23, 28, AND 29, TOWNSHIP 9 SOUTH, RANGE 16 EAST, DUCHESNE COUNTY, UTAH, AS CLASS II INJECTION WELLS.

THE STATE OF UTAH TO ALL PERSONS INTERESTED IN THE ABOVE ENTITLED MATTER.

Notice is hereby given that the Division of Oil, Gas and Mining (the "Division") is commencing an informal adjudicative proceeding to consider the application of Newfield Production Company, 1001 17th Street, Suite 2000, Denver, Colorado 80202, telephone 303-893-0102, for administrative approval of the following wells located in Duchesne County, Utah, for conversion to Class II injection wells:

Greater Monument Butte Unit:
Ashley Federal 12-24R-9-15 well located in NW/4 SW/4, Section 24, Township 9 South, Range 15 East
API 43-013-15782
Federal 2-22-9-16 well located in NW/4 NE/4, Section 22 Township 9 South, Range 16 East
API 43-013-32958
Federal 6-22-9-16 well located in SE/4 NW/4, Section 22, Township 9 South, Range 16 East
API 43-013-33026
Federal 8-22-9-16 well located in SE/4 NE/4, Section 22, Township 9 South, Range 16 East
API 43-013-32959
Federal 14-22-9-16 well located in SE/4 SW/4, Section 22, Township 9 South, Range 16 East
API 43-013-33147
Federal 4-23-9-16 well located in NW/4 NW/4, Section 23, Township 9 South, Range 16 East
API 43-013-33177
Federal 2-28-9-16 well located in NW/4 NE/4, Section 28, Township 9 South, Range 16 East
API 43-013-33409
Federal 4-28-9-16 well located in NW/4 NW/4, Section 28, Township 9 South, Range 16 East
API 43-013-33407
Federal 2-29-9-16 well located in NW/4 NE/4, Section 29, Township 9 South, Range 16 East
API 43-013-33424

The proceeding will be conducted in accordance with Utah Admin. R649-10, Administrative Procedures.

Selected zones in the Green River Formation will be used for water injection. The maximum requested injection pressures and rates will be determined based on fracture gradient information submitted by Newfield Production Company.

Any person desiring to object to the application or otherwise intervene in the proceeding, must file a written protest or notice of intervention with the Division within fifteen days following publication of this notice. The Division's Presiding Officer for the proceeding is Brad Hill, Permitting Manager, at P.O. Box 145801, Salt Lake City, UT 84114-5801, phone number (801) 538-5340. If such a protest or notice of intervention is received, a hearing will be scheduled in accordance with the aforementioned administrative procedural rules. Protestants and/or intervenors should be prepared to demonstrate at the hearing how this matter affects their interests.

Dated this 6th day of May, 2014.

STATE OF UTAH
DIVISION OF OIL, GAS & MINING
/s/
Brad Hill
Permitting Manager

957536 UPAXLP

NEWFIELD

Newfield Exploration Company
1001 17th Street | Suite 2000
Denver, Colorado 80202
PH 303-893-0102 | FAX 303-893-0103

April 23, 2014

Mr. Mark Reinbold
State of Utah
Division of Oil, Gas and Mining
1594 W North Temple
Salt Lake City, Utah 84114-5801

RECEIVED
APR 25 2014
DIV. OF OIL, GAS & MINING

RE: Permit Application for Water Injection Well
Federal #8-22-9-16
Monument Butte Field, Lease #UTU-64379
Section 22-Township 9S-Range 16E
Duchesne County, Utah

Dear Mr. Reinbold:

Newfield Production Company herein requests approval to convert the Federal #8-22-9-16 from a producing oil well to a water injection well in the Monument Butte (Green River) Field.

I hope you find this application complete; however, if you have any questions or require additional information, please contact me at (303) 893-0102.

Sincerely,

Jill L Loyle
Regulatory Associate

NEWFIELD PRODUCTION COMPANY

APPLICATION FOR APPROVAL OF CLASS II INJECTION WELL

FEDERAL #8-22-9-16

MONUMENT BUTTE FIELD (GREEN RIVER) FIELD

LEASE #UTU-64379

APRIL 23, 2014

TABLE OF CONTENTS

LETTER OF INTENT
COVER PAGE
TABLE OF CONTENTS
UIC FORM 1 – APPLICATION FOR INJECTION WELL
WELLBORE DIAGRAM OF PROPOSED INJECTION
WORK PROCEDURE FOR INJECTION CONVERSION
COMPLETED RULE R615-5-1 QUESTIONNAIRE
COMPLETED RULE R615-5-2 QUESTIONNAIRE

ATTACHMENT A	ONE-HALF MILE RADIUS MAP
ATTACHMENT A-1	WELL LOCATION PLAT
ATTACHMENT B	LIST OF SURFACE OWNERS WITHIN ONE-HALF MILE RADIUS
ATTACHMENT C	CERTIFICATION FOR SURFACE OWNER NOTIFICATION
ATTACHMENT E	WELLBORE DIAGRAM – FEDERAL #8-22-9-16
ATTACHMENT E-1	WELLBORE DIAGRAM – FEDERAL #1-22-9-16
ATTACHMENT E-2	WELLBORE DIAGRAM – FEDERAL #2-22-9-16
ATTACHMENT E-3	WELLBORE DIAGRAM – FEDERAL #6-22-9-16
ATTACHMENT E-4	WELLBORE DIAGRAM – FEDERAL #7-22-9-16
ATTACHMENT E-5	WELLBORE DIAGRAM – FEDERAL #9-22-9-16
ATTACHMENT E-6	WELLBORE DIAGRAM – FEDERAL #10-22-9-16
ATTACHMENT E-7	WELLBORE DIAGRAM – FEDERAL #16-22-9-16
ATTACHMENT E-8	WELLBORE DIAGRAM – FEDERAL #4-23-9-16
ATTACHMENT E-9	WELLBORE DIAGRAM – FEDERAL #5-23-9-16
ATTACHMENT E-10	WELLBORE DIAGRAM – FEDERAL #11-23-9-16
ATTACHMENT E-11	WELLBORE DIAGRAM – CASTLE PEAK FEDERAL #6-23-9-16
ATTACHMENT E-12	WELLBORE DIAGRAM – FEDERAL #12-23-9-16
ATTACHMENT E-13	WELLBORE DIAGRAM – FEDERAL #13-23-9-16
ATTACHMENT E-14	WELLBORE DIAGRAM – JONAH FEDERAL #16-15-9-16
ATTACHMENT E-15	WELLBORE DIAGRAM – GMBU #Y-14-9-16
ATTACHMENT E-16	WELLBORE DIAGRAM – GMBU #V-15-9-16
ATTACHMENT E-17	WELLBORE DIAGRAM – GMBU #G-23-9-16
ATTACHMENT F	WATER ANALYSIS
ATTACHMENT G	FRACTURE GRADIENT CALCULATIONS
ATTACHMENT G-1	FRACTURE REPORTS DATED – 12/6/2006 – 12/14/2006
ATTACHMENT H	WORK PROCEDURE FOR PROPOSED PLUG AND ABANDON
ATTACHMENT H-1	WELLBORE DIAGRAM OF PROPOSED PLUGGED WELL

STATE OF UTAH
DIVISION OF OIL, GAS AND MINING

APPLICATION FOR INJECTION WELL - UIC FORM 1

OPERATOR Newfield Production Company
ADDRESS 1001 17th Street, Suite 2000
Denver, Colorado 80202

Well Name and number: Federal #8-22-9-16
Field or Unit name: Monument Butte (Green River) Lease No. UTU-64379
Well Location: QQ SENE section 22 township 9S range 16E county Duchesne

Is this application for expansion of an existing project? ..... Yes [X] No [ ]
Will the proposed well be used for: Enhanced Recovery? ..... Yes [X] No [ ]
Disposal? ..... Yes [ ] No [X]
Storage? ..... Yes [ ] No [X]
Is this application for a new well to be drilled? ..... Yes [ ] No [X]
If this application is for an existing well,
has a casing test been performed on the well?..... Yes [ ] No [X]
Date of test:
API number: 43-013-32959

Proposed injection interval: from 3785 to 5829
Proposed maximum injection: rate 500 bpd pressure 1919 psig
Proposed injection zone contains [x] oil, [ ] gas, and/or [ ] fresh water within 1/2 mile of the well.

IMPORTANT: Additional information as required by R615-5-2 should accompany this form.

List of Attachments: Attachments "A" through "H-1"

I certify that this report is true and complete to the best of my knowledge.

Name: Jill L Loyle
Title Regulatory Associate
Phone No. (303) 383-4135
Signature Jill L Loyle
Date 4/23/14

(State use only)
Application approved by Title
Approval Date

Comments:

Federal 8-22-9-16

Spud Date: 11/01/06
Put on Production: 12/13/06

K.B.: 5791, G.L.: 5779

Proposed Injection
Wellbore Diagram

Initial Production: BOPD,
MCFD, BWPD

SURFACE CASING

CSG SIZE: 8-5/8"

GRADE: J-55

WEIGHT: 24#

LENGTH: 7 jts. (310.68')

DEPTH LANDED: 322.53' KB

HOLE SIZE:12-1/4"

CEMENT DATA: 160 sxs Class "G" cmt, est 5 bbls cmt to surf.

PRODUCTION CASING

CSG SIZE: 5-1/2"

GRADE: J-55

WEIGHT: 15.5#

LENGTH: 133 jts. (5837.43')

DEPTH LANDED: 5850.68' KB

HOLE SIZE: 7-7/8"

CEMENT DATA: 322 sxs Prem. Lite II mixed & 450 sxs 50/50 POZ.

CEMENT TOP: 60'

TUBING

SIZE/GRADE/WT.: 2-7/8" / J-55 / 6.5#

NO. OF JOINTS: 175 jts (5517.93')

TUBING ANCHOR: 5517.90' KB

NO. OF JOINTS: 1 jts (31.70')

SEATING NIPPLE: 2-7/8" (1.10')

SN LANDED AT: 5552.4' KB

NO. OF JOINTS: 2 jts (63.10')

TOTAL STRING LENGTH: EOT @ 5617' KB

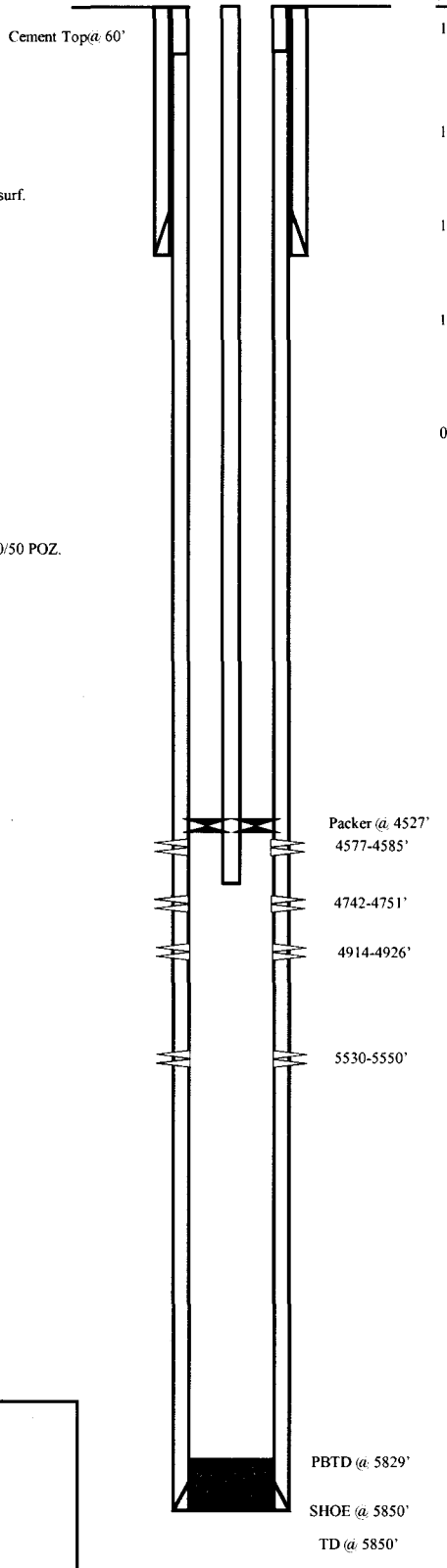

FRAC JOB

12/08/06	5530-5550'	**Frac CP4, sands as follows:** 30245# 20/40 sand in 381 bbls Lightning 17 frac fluid. Treated @ avg press of 2020 psi w/avg rate of 25 BPM. ISIP 1960 psi. Calc flush: 5548 gal. Actual flush: 4998 gal.
12/08/06	4914-4926'	**Frac A1 sands as follows:** 70951# 20/40 sand in 533 bbls Lightning 17 frac fluid. Treated @ avg press of 1762 psi w/avg rate of 25 BPM. ISIP 2190 psi. Calc flush: 4924 gal. Actual flush: 4452 gal.
12/08/06	4742-4751'	**Frac B2 sands as follows:** 29729# 20/40 sand in 414 bbls Lightning 17 frac fluid. Treated @ avg press of 2490 psi w/avg rate of 25 BPM. ISIP 1950 psi. Calc flush: 4749 gal. Actual flush: 4242 gal.
12/08/06	4577-4585'	**Frac C sands as follows:** 26560# 20/40 sand in 342 bbls Lightning 17 frac fluid. Treated @ avg press of 2804 psi w/avg rate of 25 BPM. ISIP psi. Calc flush: 4583 gal. Actual flush:4242 gal.
07/16/10		Pump Change. Rod & Tubing detail.

PERFORATION RECORD

12/05/06	5530-5550'	4 JSPF	80 holes
12/08/06	4914-4926'	4 JSPF	48 holes
12/08/06	4742-4751'	4 JSPF	36 holes
12/08/06	4577-4585'	4 JSPF	32 holes

NEWFIELD

Federal 8-22-9-16

2200' FNL & 618' FEL

SE/NE Section 22-T9S-R16E

Duchesne Co, Utah

API #43-013-32959; Lease #UTU-64379

JL 3/19/2014

WORK PROCEDURE FOR INJECTION CONVERSION

1. Rig up hot oil truck to casing. Pump water. Unseat pump. Flush rods. Trip out of hole with rods and pump.

2. Trip out of hole with tubing, breaking and doping every connection. Trip in hole with packer and tubing. Rig up water truck to casing. Pump packer fluid. Set packer.

3. Test casing and packer.

4. Rig down and move out.

REQUIREMENTS FOR INJECTION OF FLUIDS INTO RESERVOIRS
RULE R615-5-1

1. **Operations to increase ultimate recovery, such as cycling of gas, the maintenance of pressure, the introduction of gas, water or other substances into a reservoir for the purpose of secondary or other enhanced recovery or for storage and the injection of water into any formation for the purpose of water disposal shall be permitted only by order of the Board after notice and hearing.**

2. **A request for agency action for authority for the injection of gas, liquified petroleum gas, air, water or any other medium into any formation for any reason, including but not necessarily limited to the establishment of or the expansion of waterflood projects, enhanced recovery projects, and pressure maintenance projects shall contain:**

2.1 The name and address of the operator of the project.

Newfield Production Company
1001 17th Street, Suite 2000
Denver, Colorado 80202

2.2 A plat showing the area involved and identifying all wells, including all proposed injection wells, in the project area and within one-half mile of the project area.

See Attachment A.

2.3 A full description of the particular operation for approval is requested.

Approval is requested to convert the Federal #8-22-9-16 from a producing oil well to a water injection well in Monument Butte (Green River) Field.

2.4 A description of the pools from which the identified wells are producing or have produced.

The proposed injection well will inject into the Green River Formation.

2.5 The names, description and depth of the pool or pools to be affected.

The injection zone is in the Green River Formation. For the Federal #8-22-9-16 well, the proposed injection zone is from Garden Gulch to Basal Carbonate (3785' - 5829'). The confining strata directly above and below the injection zones are the Garden Gulch and the top of the Wasatch Formation or TD, which ever is shallower. The Garden Gulch Marker top is at 3466' and the TD is at 5850'.

2.6 A copy of a log of a representative well completed in the pool.

The referenced log for the Federal #8-22-9-16 is on file with the Utah Division of Oil, Gas and Mining.

2.7 A statement as to the type of fluid to be used for injection, its source and the estimated amounts to be injected daily.

The primary type and source of fluid to be used for injection will be culinary water commingled with produced water. The average estimated injection of fluids will be at a rate of 300 BPD, and the estimated maximum injection will be at a rate of 500 BPD.

2.8 A list of all operators and surface owners within one-half mile radius of the proposed project.

See Attachment B.

2.9 An affidavit certifying that said operators or owners and surface owners within a one-half mile radius have been provided a copy of the petition for injection.

See Attachment C.

2.10 Any additional information the Board may determine is necessary to adequately review the petition.

Newfield Production Company will supply any additional information requested by the Utah Division of Oil, Gas and Mining.

4.0 Establish recovery projects may be expanded and additional wells placed on injection only upon authority from the Board after notice and hearing or by administrative approval.

This proposed injection well is on a Federal lease (Lease #UTU-64379) in the Monument Butte Federal (Green River) Field, and this request is for administrative approval.

REQUIREMENTS FOR CLASS II INJECTION WELLS INCLUDING WATER DISPOSAL, STORAGE AND ENHANCED RECOVERY WELLS
SECTION V – RULE R615-5-2

1. **Injection well shall be completed, equipped, operated, and maintained in a manner that will prevent pollution and damage to any USDW, or other resources and will confine injected fluids to the interval approved.**

2. **The application for an injection well shall include a properly completed Form DOGM-UIC-1 and the following:**

   2.1 **A plat showing the location of the injection well, all abandoned or active wells within a one-half mile radius of the proposed wells, and the surface owner and the operator of any lands or producing leases, respectively, within a one-half mile radius of the proposed injection well.**

   See Attachments A and B.

   2.2 **Copies of electrical or radioactive logs, including gamma ray logs, for the proposed well run prior to the installation of casing and indicating resistivity, spontaneous potential, caliper and porosity.**

   All logs are on file with the Utah Division of Oil, Gas and Mining.

   2.3 **A copy of a cement bond or comparable log run for the proposed injection well after casing was set and cemented.**

   A copy of the cement bond log is on file with the Utah Division of Oil, Gas and Mining.

   2.4 **Copies of logs already on file with the Division should be referenced, but need not be refiled.**

   All copies of logs are on file with the Utah Division of Oil, Gas and Mining.

   2.5 **A description of the casing or proposed casing program of the injection well and of the proposed method for testing the casing before use of the well.**

   The casing program is 8-5/8", 24# surface casing run to 323' KB, and 5-1/2", 15.5# casing run from surface to 5851' KB. A casing integrity test will be conducted at the time of conversion. See Attachment E.

   2.6 **A statement as to the type of fluid to be used for injection, its source and estimated amounts to be injected daily.**

   The primary type and source of fluid to be used for injection will be culinary water commingled with produced water. The estimated average rate of injection will be 300 BPD, and the estimated maximum rate of injection will be 500 BPD.

   2.7 **Standard laboratory analysis of the fluid to be injected, the fluid in the formation into which the fluid is being injected, and the compatibility of the fluids.**

   See Attachment F.

2.8 The proposed average and maximum injection pressures.

The proposed average injection pressure will be approximately 1100 psig and the maximum injection pressure will not exceed 1919 psig.

2.9 Evidence and data to support a finding that the proposed injection well will not initiate fractures through the overlying strata or a confining interval that could enable the injected fluid or formation fluid to enter the fresh water strata.

The minimum fracture gradient for the Federal #8-22-9-16, for existing perforations (4577' - 5550') calculates at 0.84 psig/ft. The maximum injection pressures will be limited so as not to exceed this gradient. A step rate test will be performed periodically to ensure we are below parting pressure. The proposed maximum injection pressure is 1919 psig. We may add additional perforations between 3466' and 5850'. See Attachments G and G-1.

2.10 Appropriate geological data on the injection interval and confining beds, including the geologic name, lithologic description, thickness, depth, and lateral extent.

In the Federal #8-22-9-16, the proposed injection zone (3785' - 5829') is in the Garden Gulch to the Basal Carbonate of the Green River Formation. The reservoir is a very fine-grained sandstone with minor imbedded shale streaks. The estimated porosity is 13%. The members are composed of porous and permeable lenticular calcareous sandstone and low porosity carbonates and calcareous shale. The porous and lenticular sandstone varies in thickness from 0-31' and is confined to the Monument Butte Federal Field. Outside the Monument Butte Federal Field, the sandstone is composed of tight, very fine, silty, calcareous sandstone, less than 3' thick. The stratum confining the injection zone is composed of tight, moderately calcareous, sandy lacustrine shale. All of the confining strata are impermeable, and will effectively seal off the oil, gas, and water of the injection zone from any strata directly above or below it.

2.11 A review of the mechanical condition of each well within a one-half mile radius of the proposed injection well to assure that no conduit exists that could enable fluids to migrate up or down the wellbore and enter the improper intervals.

See Attachments E through E-17.

Additionally, the injection system will be equipped with high and low pressure shut down devices that will automatically shut in injection waters if a system blockage or leakage occurs. One way check valves will also ensure proper flow management. Relief valves will also be utilized for high-pressure relief.

2.12 An affidavit certifying that a copy of the application has been provided to all operators or owners, and surface owners within a one-half mile radius of the proposed injection well.

See Attachment C.

2.13 Any other information that the Board or Division may determine is necessary to adequately review the application.

Newfield Production Company will supply any requested information to the Board or Division.

ATTACHMENT A

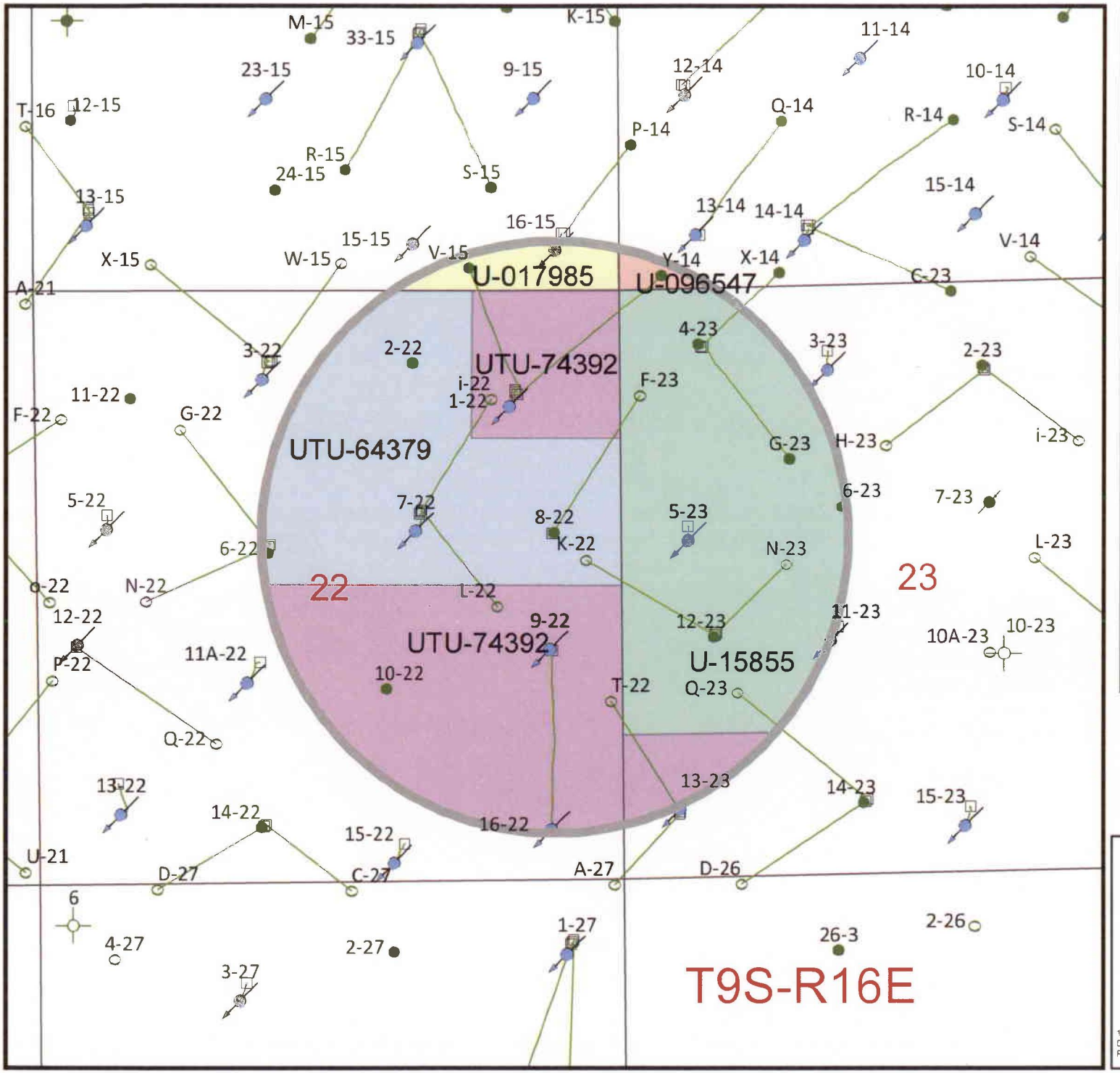

Lease Number

- U-017985
- U-096547
- U-15855
- UTU-64379
- UTU-74392
- Half-Mile Buffer

Well Status

- Location
- Surface Spud
- Drilling
- Waiting on Completion
- Producing Oil Well
- Producing Gas Well
- Water Injection Well
- Water Disposal Well
- Dry Hole
- Temporarily Abandoned
- Plugged & Abandoned
- Shut In
- Well Surface Location

Federal 8-22-9-16
Section 22, T9S-R16E

NEWFIELD
ROCKY MOUNTAINS

N

1 in = 1,250 feet

1/2 Mile Radius Map

Duchesne County

1001 17th Street Suite 2000
Denver, Colorado 80202
Phone (303) 893-0102

March 13, 2014

ATTACHMENT A-1

T9S, R16E, S.L.B.&M.

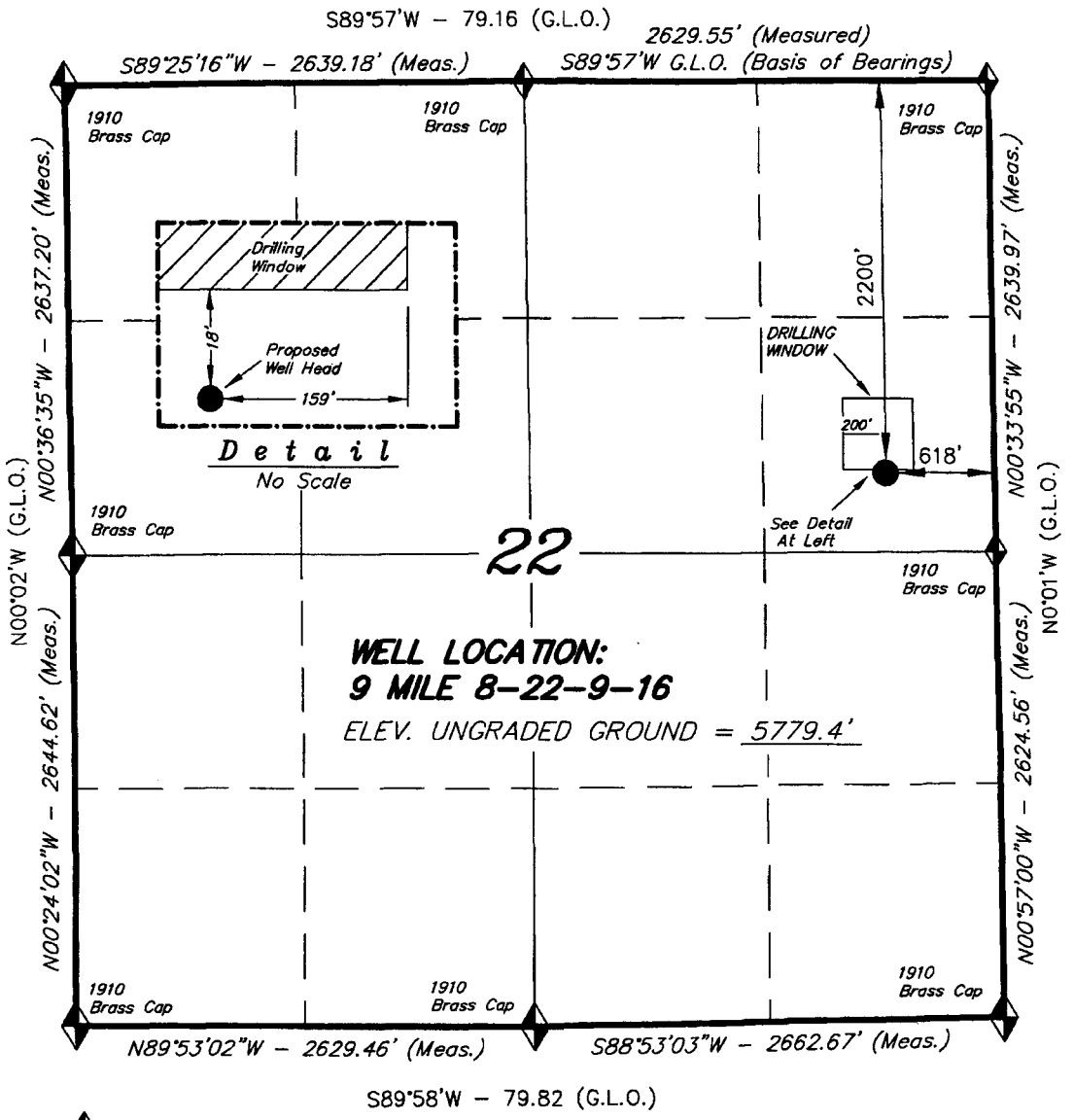

◆ = SECTION CORNERS LOCATED

BASIS OF ELEV; U.S.G.S. 7-1/2 min QUAD (MYTON SE)

NEWFIELD PRODUCTION COMPANY

WELL LOCATION, 9 MILE 8-22-9-16, LOCATED AS SHOWN IN THE SE 1/4 NE 1/4 OF SECTION 22, T9S, R16E, S.L.B.&M. DUCHESNE COUNTY, UTAH.

N

THIS IS TO CERTIFY THAT THE ABOVE PLAT WAS PREPARED FROM FIELD NOTES OF ACTUAL SURVEYS MADE BY ME OR UNDER MY SUPERVISION AND THAT THE SAME ARE TRUE AND CORRECT TO THE BEST OF MY KNOWLEDGE AND BELIEF.

REGISTERED LAND SURVEYOR No.189377 STATE OF UTAH

STACY W. STEWART
REGISTERED LAND SURVEYOR
REGISTRATION No. 189377
STATE OF UTAH

TRI STATE LAND SURVEYING & CONSULTING
180 NORTH VERNAL AVE. – VERNAL, UTAH 84078
(435) 781-2501

SCALE: 1" = 1000'	SURVEYED BY: D.P.
DATE: 10-3-05	DRAWN BY: F.T.M.
NOTES:	FILE #

EXHIBIT B

#	Legal Description	Lessor & Expiration	Lessee & Operating Rights	Surface Owner
1	T9S-R16E SLM Section 10: S2SE Section 15: E2,E2W2	USA UTU-017985 HBP	Newfield Production Company Newfield RMI LLC ABO Petroleum Corp MYCO Industries Inc OXY Y-1 Company Yates Petroleum Corp	USA
2	T9S-R16E SLM Section 11: W2SW, SESW Section 14: SWNE, W2, W2SE, SESE	USA UTU-096547 HBP	Newfield Production Company Newfield RMI LLC Yates Petroleum Corporation ABO Petroleum Corp Myco Industries Inc Oxy Y-1 Company	USA
3	T9S-16E SLM Section 23: E2, NW, E2SW, NWSW Section 24: N2, SW, N2SE, SWSE	USA UTU-15855 HBP	Newfield Production Company Newfield RMI LLC Bee Hive Oil LLC Journey Properties LLC King Oil & Gas of Texas LTD Six Gold Oil LLC Stone Energy Corp	USA
4	T9S-R16E SLM Section 8: SWNE, SE Section 9: SWSW Section 17: NE Section 18: E2SW, SE, LOTS 3,4 Section 19: NE, E2NW, LOTS 1,2 Section 21: N2 Section 22: W2NE, SENE, NW	USA UTU-64379 HBP	Newfield Production Company Newfield RMI LLC Yates Petroleum Corp	USA

5	T9S-R16E SLM	USA	Newfield Production Company	USA
	Section 21: S2	UTU-74392	Newfield RMI LLC	
	Section 22: NENE, S2	HBP	ABO Petroleum Corp	
	Section 23: SWSW		MYCO Industries Inc	
	Section 24: SESE		OXY Y-1 Company	
	Section 26: NENE		Yates Petroleum Corp	
	Section 27: All			
	Section 28: All			

ATTACHMENT C

CERTIFICATION FOR SURFACE OWNER NOTIFICATION

RE: Application for Approval of Class II Injection Well
Federal #8-22-9-16

I hereby certify that a copy of the injection application has been provided to all surface owners within a one-half mile radius of the proposed injection well.

Signed: _____
Newfield Production Company
Jill L Loyle
Regulatory Associate

Sworn to and subscribed before me this 23rd day of April, 2014.

Notary Public in and for the State of Colorado: Lydia Biondo

My Commission Expires: 12/31/15

LYDIA BIONDO
Notary Public
State of Colorado

ATTACHMENT E

Federal 8-22-9-16

Spud Date: 11/01/06
Put on Production: 12/13/06

K.B.: 5791, G.L.: 5779

Wellbore Diagram

Initial Production: BOPD, MCFD, BWPD

SURFACE CASING

CSG SIZE: 8-5/8"
GRADE: J-55
WEIGHT: 24#
LENGTH: 7 jts. (310.68')
DEPTH LANDED: 322.53' KB
HOLE SIZE:12-1/4"
CEMENT DATA: 160 sxs Class "G" cmt, est 5 bbls cmt to surf.

PRODUCTION CASING

CSG SIZE: 5-1/2"
GRADE: J-55
WEIGHT: 15.5#
LENGTH: 133 jts. (5837.43')
DEPTH LANDED: 5850.68' KB
HOLE SIZE: 7-7/8"
CEMENT DATA: 322 sxs Prem. Lite II mixed & 450 sxs 50/50 POZ.
CEMENT TOP: 60'

TUBING

SIZE/GRADE/WT.: 2-7/8" / J-55 / 6.5#
NO. OF JOINTS: 175 jts (5517.93')
TUBING ANCHOR: 5517.90' KB
NO. OF JOINTS: 1 jts (31.70')
SEATING NIPPLE: 2-7/8" (1.10')
SN LANDED AT: 5552.4' KB
NO. OF JOINTS: 2 jts (63.10')
TOTAL STRING LENGTH: EOT @ 5617' KB

SUCKER RODS

POLISHED ROD: 1-1/2" x 22' SM
SUCKER RODS: 2-8' x 3/4" pony rod, 100-3/4"guided rods, 86-3/4" guided rods, 30-3/4" guided rods, 6-1 ½" weight rods.
PUMP SIZE: 2-1/2" x 1-1/2" x 14' RHAC w/SM plunger
STROKE LENGTH: 61"
PUMP SPEED, 5 SPM:

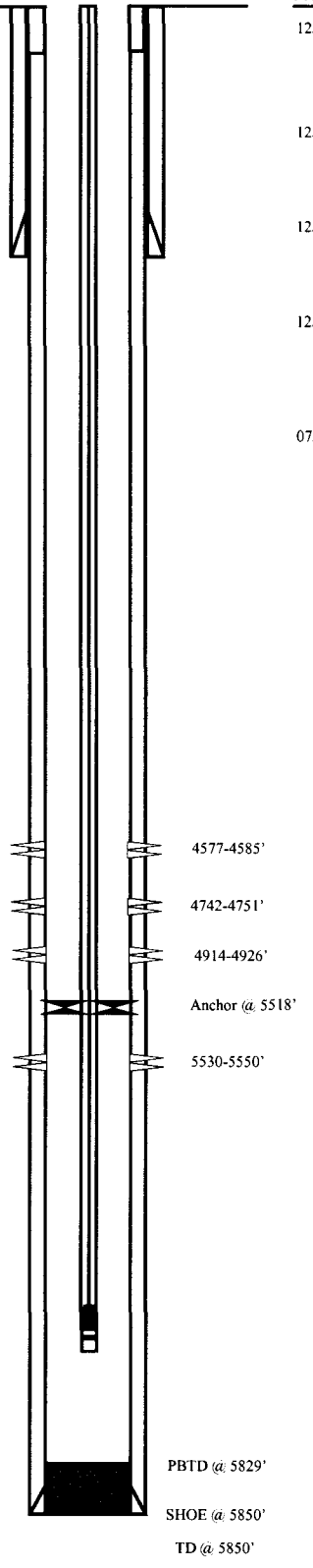

FRAC JOB

12/08/06	5530-5550'	**Frac CP4, sands as follows:** 30245# 20/40 sand in 381 bbls Lightning 17 frac fluid. Treated @ avg press of 2020 psi w/avg rate of 25 BPM. ISIP 1960 psi. Calc flush: 5548 gal. Actual flush: 4998 gal.
12/08/06	4914-4926'	**Frac A1 sands as follows:** 70951# 20/40 sand in 533 bbls Lightning 17 frac fluid. Treated @ avg press of 1762 psi w/avg rate of 25 BPM. ISIP 2190 psi. Calc flush: 4924 gal. Actual flush: 4452 gal.
12/08/06	4742-4751'	**Frac B2 sands as follows:** 29729# 20/40 sand in 414 bbls Lightning 17 frac fluid. Treated @ avg press of 2490 psi w/avg rate of 25 BPM. ISIP 1950 psi. Calc flush: 4749 gal. Actual flush: 4242 gal.
12/08/06	4577-4585'	**Frac C sands as follows:** 26560# 20/40 sand in 342 bbls Lightning 17 frac fluid. Treated @ avg press of 2804 psi w/avg rate of 25 BPM. ISIP psi. Calc flush: 4583 gal. Actual flush:4242 gal.
07/16/10		Pump Change. Rod & Tubing detail.

PERFORATION RECORD

12/05/06	5530-5550'	4 JSPF	80 holes
12/08/06	4914-4926'	4 JSPF	48 holes
12/08/06	4742-4751'	4 JSPF	36 holes
12/08/06	4577-4585'	4 JSPF	32 holes

NEWFIELD

Federal 8-22-9-16

2200' FNL & 618' FEL

SE/NE Section 22-T9S-R16E

Duchesne Co, Utah

API #43-013-32959; Lease #UTU-64379

TW 09/14/10

ATTACHMENT E-1

Federal 1-22-9-16

Spud Date: 12-26-05

Put on Production: 01-19-06

GL: 5742' KB: 5754'

Injection Wellbore Diagram

SURFACE CASING

CSG SIZE: 8-5/8"

GRADE: J-55

WEIGHT: 24#

LENGTH: 7 jts. (315.48')

DEPTH LANDED: 327.33' KB

HOLE SIZE:12-1/4"

CEMENT DATA: 160 sxs Class "G" cmt, est 4 bbls cmt to surf.

PRODUCTION CASING

CSG SIZE: 5-1/2"

GRADE: J-55

WEIGHT: 15.5#

LENGTH: 139 jts. (5871.28')

DEPTH LANDED: 5869.78' KB

HOLE SIZE: 7-7/8"

CEMENT DATA: 400 sxs Prem. Lite II mixed & 450 sxs 50/50 POZ.

CEMENT TOP AT: 120'

TUBING

SIZE/GRADE/WT.: 2-7/8" / J-55 / 6.5#

NO. OF JOINTS: 124 jts (3933.1')

SEATING NIPPLE: 2-7/8" (1.10')

SN LANDED AT: 3945.1' KB

ON/OFF TOOL AT: 3946.2'

ARROW #1 PACKER CE AT: 3951'

XO 2-3/8 x 2-7/8 J-55 AT: 3955.2'

TBG PUP 2-3/8 J-55 AT: 3955.8'

X/N NIPPLE AT: 3959.9'

TOTAL STRING LENGTH: EOT @ 3961'

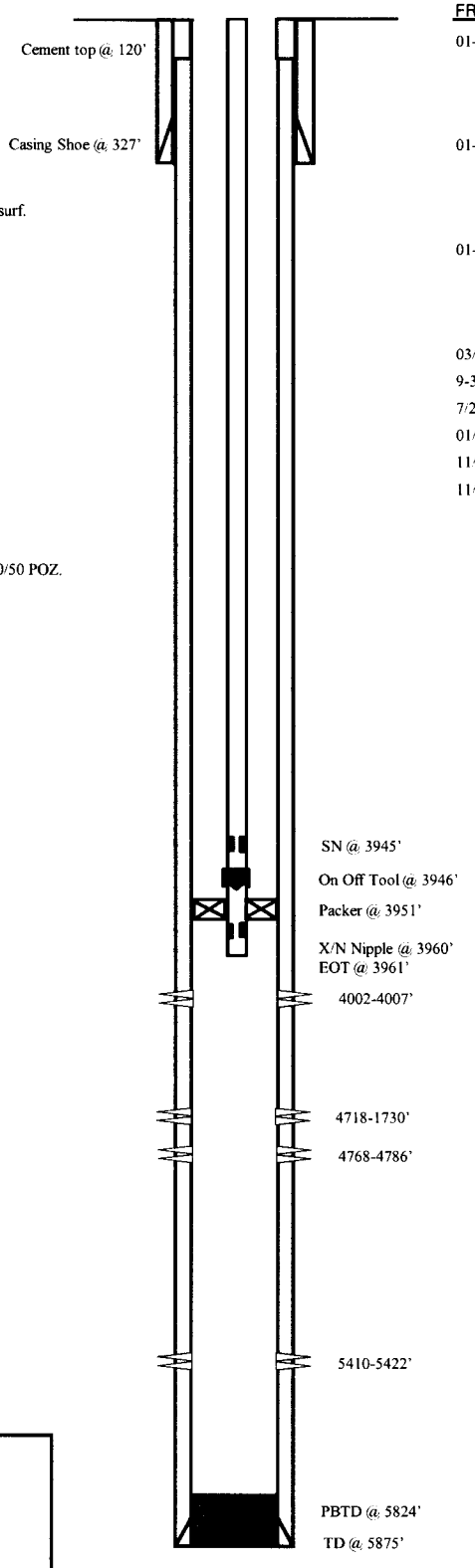

FRAC JOB

01-16-06	5410-5422'	**Frac CP2, sands as follows:** 45584# 20/40 sand in 483 bbls Lightning 17 frac fluid. Treated @ avg press of 2087 psi w/avg rate of 25 BPM. ISIP 2130 psi. Calc flush: 5408 gal. Actual flush: 4788 gal.
01-16-06	4718-4730'	**Frac B2, & B1 sands as follows:** 124027# 20/40 sand in 851 bbls Lightning 17 frac fluid. Treated @ avg press of 1490 psi w/avg rate of 24.9 BPM. ISIP 1900 psi. Calc flush: 4716 gal. Actual flush: 4116 gal.
01-16-06	4002-4007'	**Frac GB6 sands as follows:** 23163# 20/40 sand in 305 bbls Lightning 17 frac fluid. Treated @ avg press of 1785 psi w/avg rate of 14.5 BPM. ISIP 2080 psi. Calc flush: 4000 gal. Actual flush: 3877 gal.
03/22/06		**Pump Change**. Update rod and tubing details.
9-3-08		**Pump Change**. Updated rod &tubing details.
7/21/09		**Tubing Leak**. Updated rod & tubing details.
01/13/2011		**Pump Change**. Rod & tubing detail updated.
11/14/12		**Convert to Injection Well**
11/16/12		**Conversion MIT Finalized** – update tbg detail

PERFORATION RECORD

01-11-06	5410-5422'	4 JSPF	48 holes
01-16-06	4768-4786'	4 JSPF	72 holes
01-16-06	4718-4730'	4 JSPF	48 holes
01-16-06	4002-4007'	4 JSPF	20 holes

NEWFIELD

Federal 1-22-9-16

887' FNL & 963' FEL

NE/NE Section 22-T9S-R16E

Duchesne Co, Utah

API #43-013-32612; Lease #UTU-74392

LCN 11/19/12

ATTACHMENT E-2

FEDERAL 2-22-9-16

Spud Date: 05/23/07
Put on Production: 07/03/07

GL: 5860' KB: 5872'

Wellbore Diagram

SURFACE CASING

CSG SIZE: 8-5/8"
GRADE: J-55
WEIGHT: 24#
LENGTH: 7 jts. (302.90')
DEPTH LANDED: 314.75' KB
HOLE SIZE:12-1/4"
CEMENT DATA: 160 sxs Class "G" cmt, cir 6 bbls to surf.

PRODUCTION CASING

CSG SIZE: 5-1/2"
GRADE: J-55
WEIGHT: 15.5#
LENGTH: 136 jts. (5894.51')
DEPTH LANDED: 5893.76' KB
HOLE SIZE: 7-7/8"
CEMENT DATA: 300 sxs Prem. Lite II mixed & 425 sxs 50/50 POZ.
CEMENT TOP: 57' per CBL 6/25/07

TUBING (GI 4/9/12)

SIZE/GRADE/WT.: 2-7/8" / J-55 / 6.5#
NO. OF JOINTS: 178 jts. (5519.9')
TUBING ANCHOR: 5531.9'
NO. OF JOINTS: 1 jts (31.40')
SEATING NIPPLE: 2-7/8" (1.10')
SN LANDED AT: 5566.10'
NO. OF JOINTS: 1 jt. (29.80')
PBGA: 3-1/2" (5.4')
NO. OF JOINTS: 3 jts (94.7')
PBGA: 2-7/8" (0.7')
TOTAL STRING LENGTH: EOT @ 5698'

SUCKER RODS (GI 4/9/12)

POLISHED ROD: 1-1/2" x 22' polish rod
SUCKER RODS: 131 x ¾" guided rods(4per), 47 x ¾" sucker rods, 37 x ¾" guided rods(4per), 6 x 1-½ Sinker bars, 6 x 1" Stabilizer rod
PUMP SIZE: 2-1/2" x 1-1/4" x 12' x 16' RHAC
STROKE LENGTH: 86"
PUMP SPEED, SPM: 5
PUMPING UNIT: Weatherford C-228-213-86

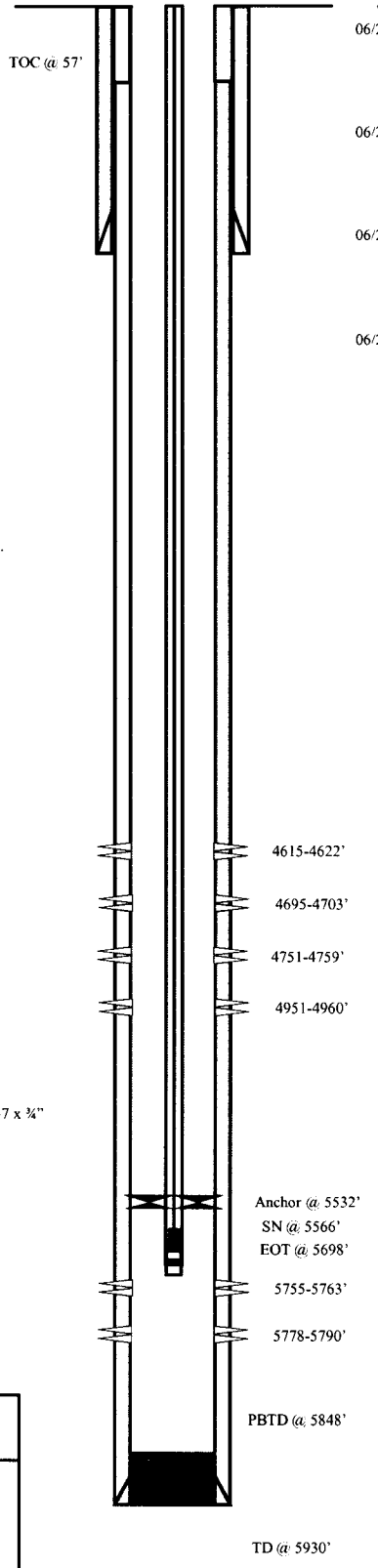

FRAC JOB

06/27/07 5755-5790' **Frac CP5 sands as follows:** 60101# 20/40 sand in 501 bbls Lightning 17 frac fluid. Treated @ avg press of 1583 psi w/avg rate of 24.7 BPM. ISIP 1950 psi. Calc flush: 5753 gal. Actual flush: 5166 gal.

06/27/07 4951-4960' **Frac A.5 sands as follows:** 39988# 20/40 sand in 382 bbls Lightning 17 frac fluid. Treated @ avg press of 2087 psi w/avg rate of 24.7 BPM. ISIP 2525 psi. Calc flush: 4898 gal. Actual flush: 4360 gal.

06/27/07 4695-4759' **Frac D3 & C sands as follows:** 57108# 20/40 sand in 466 bbls Lightning 17 frac fluid. Treated @ avg press of 2290 psi w/avg rate of 24.7 BPM. ISIP 3228 psi. Calc flush: 4693 gal. Actual flush: 4158 gal.

06/29/07 4615-4622' **Frac D1 sands as follows:** 9646# 20/40 sand in 210 bbls Lightning 17 frac fluid. Treated @ avg press of 2799 psi w/avg rate of 24.7 BPM. ISIP 1928 psi. Calc flush: 4613 gal. Actual flush: 4536 gal.

PERFORATION RECORD

06/25/07	5778-5790'	4 JSPF	48 holes
06/25/07	5755-5763'	4 JSPF	32 holes
06/27/07	4951-4960'	4 JSPF	36 holes
06/27/07	4751-4759'	4 JSPF	32 holes
06/27/07	4695-4703'	4 JSPF	32 holes
06/27/07	4615-4622'	4 JSPF	28 holes

NEWFIELD

FEDERAL 2-22-9-16

645'FNL & 1878' FEL

NW/NE Section 22-T9S-R16E

Duchesne Co, Utah

API #43-013-32958; Lease # UTU-64379

GI 1/21/13

ATTACHMENT E-3

Federal 6-22-9-16

Spud Date: 3-13-08
Put on Production:5-6-08

GL:5913' KB:5925'

Wellbore Diagram

Initial Production: BOPD, MCFD, BWPD

SURFACE CASING

CSG SIZE: 8-5/8"

GRADE: J-55

WEIGHT: 24#

LENGTH: 7 jts (290.93')

DEPTH LANDED:302.78' KB

HOLE SIZE:12-1/4"

CEMENT DATA: 160 sxs Class "G" cmt, est 5 bbls cmt to surf.

Cement top @196'

PRODUCTION CASING

CSG SIZE: 5-1/2"

GRADE: J-55

WEIGHT: 15.5#

LENGTH: 141 jts. (5933.60')

DEPTH LANDED: 5904' KB

HOLE SIZE: 7-7/8"

CEMENT DATA: 300 sxs Prem. Lite II mixed & 400 sxs 50/50 POZ.

CEMENT TOP AT:196'

TUBING

SIZE/GRADE/WT.: 2-7/8" / J-55 / 6.5#

NO. OF JOINTS: 168 jts (5278.14')

TUBING ANCHOR: 5290.14' KB

NO. OF JOINTS: 2 jts (63.11')

SEATING NIPPLE: 2-7/8" (1.10')

SN LANDED AT: 5356.05' KB

NO. OF JOINTS: 1 jts (31.47')

TOTAL STRING LENGTH: EOT @ 5583.08' KB

SUCKER RODS

POLISHED ROD: 1-1/2" x 26' SM

SUCKER RODS: 2',6',8' x ¾" pony rods, 99- ¾" scrapered rods, 88- ¾" plain rods, 20- ¾" scrapered rods, 6- 1 ½" weight rods.

PUMP SIZE: 2-1/2" x 1-1/2" x 16' RHAC w/SM plunger

STROKE LENGTH: 86"

PUMP SPEED, SPM: 5 SPM

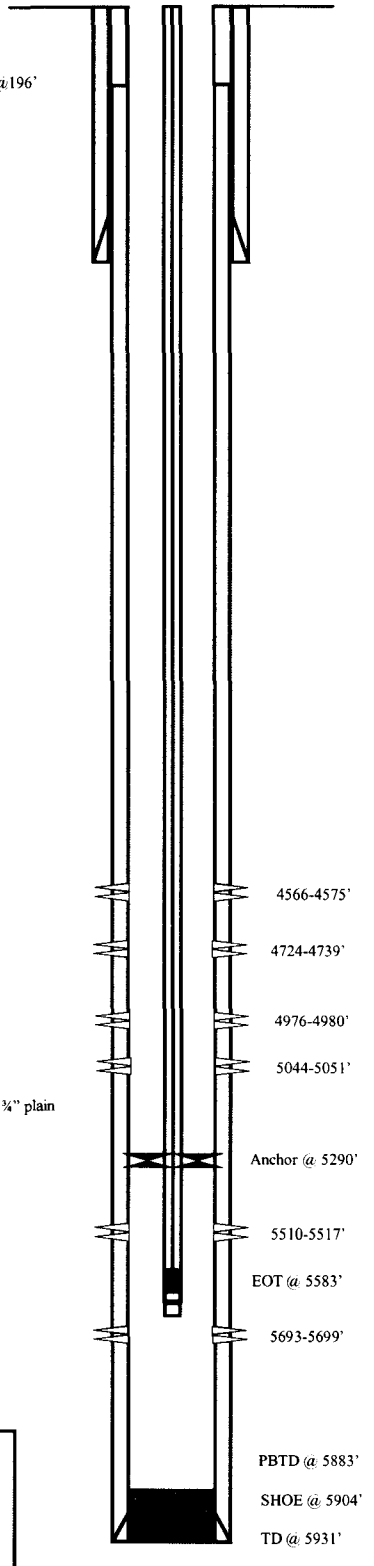

FRAC JOB

04-30-08 5693-5699' **Frac CP4 sands as follows:** 16361# 20/40 sand in 302 bbls Lightning 17 frac fluid. Treated @ avg press of 2441 psi w/avg rate of 23.2 BPM. ISIP 2055 psi. Calc flush: 5691 gal. Actual flush: 5250 gal.

04-30-08 5510-5517' **Frac CP2 sands as follows:** 15257# 20/40 sand in 279 bbls Lightning 17 frac fluid. Treated @ avg press of 2046 psi w/avg rate of 23.2 BPM. ISIP 1762 psi. Calc flush: 5508 gal. Actual flush: 4998 gal.

04-30-08 4976-5051' **Frac A3, & A1 sands as follows:** 14997# 20/40 sand in 235 bbls Lightning 17 frac fluid. Treated @ avg press of 2158 psi w/avg rate of 23.2 BPM. ISIP 1884 psi. Calc flush: 4974 gal. Actual flush: 4494 gal.

4-30-08 4724-4739' **Frac C sands as follows:** 115315# 20/40 sand in 825 bbls Lightning 17 frac fluid. Treated @ avg press of 1876 w/ avg rate of 23.2 BPM. ISIP 2044 psi. Calc flush: 4722 gal. Actual flush: 4242 gal.

04-30-08 4566-4575' **Frac D1 sands as follows:** 40206# 20/40 sand in 394 bbls Lightning 17 frac fluid. Treated @ avg press of 1832 w/ avg rate of 23.2 BPM. ISIP 1850 psi. Calc flush: 4564 gal. Actual flush: 4452 gal.

PERFORATION RECORD

04-24-08	5693-5699'	4 JSPF	24 holes
04-30-08	5510-5517'	4 JSPF	28 holes
04-30-08	5044-5051'	4 JSPF	28 holes
04-30-08	4976-4980'	4 JSPF	16 holes
04-30-08	4724-4739'	4 JSPF	60 holes
04-30-08	4566-4575'	4 JSPF	36 holes

NEWFIELD

Federal 6-22-9-16

2340' FNL & 2060' FWL

SE/NW Section 22-T9S-R16E

Duchesne Co, Utah

API # 43-013-33026; Lease # UTU-34379

TK 7-16-08

ATTACHMENT E-4

Federal 7-22-9-16

Spud Date: 3/12/08

Put on Production: 04/23/08

GL: ~~5810'~~ 5868', KB: 5880'

SURFACE CASING

CSG SIZE: 8-5/8"

GRADE: J-55

WEIGHT: 24#

LENGTH: 8 jts. (323.72')

DEPTH LANDED: 336'

HOLE SIZE: 12-1/4"

CEMENT DATA: 160 sxs Class "G" cmt

PRODUCTION CASING

CSG SIZE: 5-1/2"

GRADE: J-55

WEIGHT: 15.5#

LENGTH: 141 jts. (5930.89')

HOLE SIZE: 7-7/8"

DEPTH LANDED: 5944'

CEMENT DATA: 300 sk Prem. Lite II mixed & 400 sxs 50/50 POZ.

CEMENT TOP AT: 146'

TUBING

SIZE/GRADE/WT.: 2-7/8" / J-55 / 6.5#

TBG PUP: 1 jt (10.2')

NO. OF JOINTS: 142 jts (4480.1')

ON/OFF TOOL AT: 4502.3'

PACKER CE @ 4508.77'

XO 2-7/8 x 2-3/8" AT: 4511.2'

TBG PUP AT: 4511.7'

TOTAL STRING LENGTH: EOT @ 4517' w/12' KB

Injection Wellbore Diagram

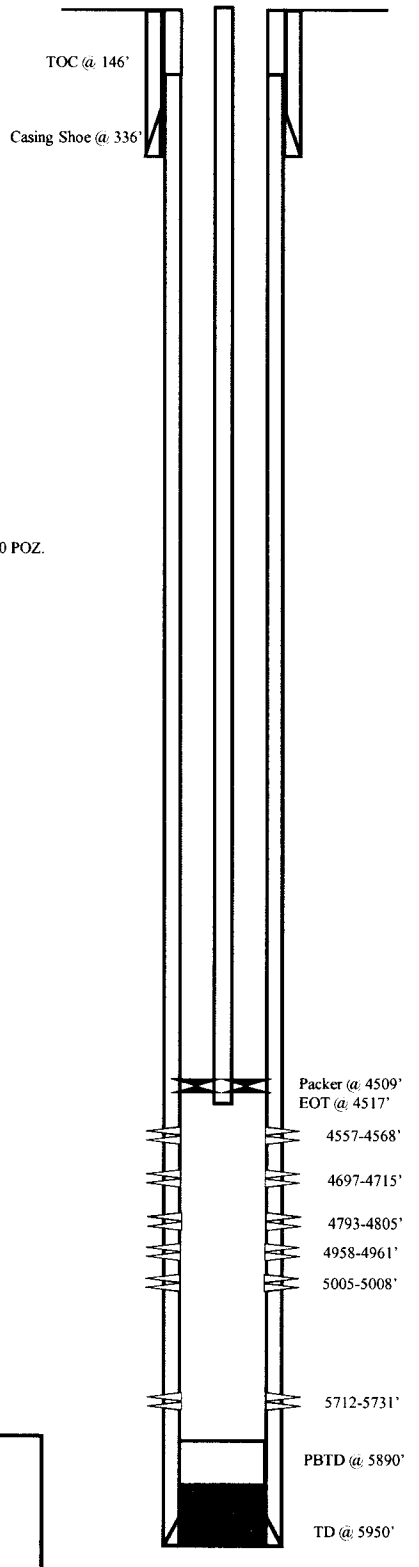

FRAC JOB

04-17-08	5712-5731'	**Frac CP5 sands as follows:** Frac with 45958 #'s of 20/40 sand in 460 bbls of Lightning 17 fluid. Treat at an ave pressure of 1725 psi @ 23.3 BPM. ISIP 1824 psi.
04-17-08	4793-4805'	**Frac B1 sands as follows:** Frac with 40109 #'s of 20/40 sand in 402 bbls of Lightning 17 fluid. Treat at an ave pressure of 1811 psi @ 23.3 BPM. ISIP 1936 psi.
04-17-08	4697-4715'	**Frac C sands as follows:** Frac with 109892 #'s of 20/40 sand in 801 bbls of Lightning 17 fluid. Treat at an ave pressure of 2002 psi @ 23.3 BPM. ISIP 2125 psi.
04-17-08	4557-4568'	**Frac D1 sands as follows:** Frac with 52326 #'s of 20/40 sand in 490 bbls of Lightning 17 fluid. Treat at an ave pressure of 2259 psi @ 23.3 BPM. ISIP 2160 psi.
04-29-08		**Pump change**. Tubing and rod details updated.
5/8/2010		**Pump changed**. Updated rod and tubing detail.
08/07/12	5005 - 5008'	**Frac A3 sands as follows:** Frac with 14510# of 20/40 sand in 230 bbls of Lightning 17 fluid.
08/07/12	4958-4961'	**Frac A1 sands as follows:** Frac with 16997# of 20/40 sand in 228 bbls of Lightning 17 fluid.
08/10/12		**Convert to Injection Well**
08/13/12		**Conversion MIT Finalized** – update tbg detail

PERFORATION RECORD

4557 - 4568'	4 JSPF	44 holes
4697 - 4715'	4 JSPF	72 holes
4793 - 4805'	4 JSPF	48 holes
5712 - 5731'	4 JSPF	76 holes
5005 – 5008'	3 JSPF	9 holes
4958 – 4961'	3 JSPF	9 holes

NEWFIELD

Federal 7-22-9-16
2036' FNL & 1837' FEL
SWNE Section 22-T9S-R16E
Duchesne Co, Utah
API #43-013-33027; Lease #UTU-64379

LCN 08/15/12

ATTACHMENT E-5

Federal 9-22-9-16

Spud Date: 4-19-2007

Put on Production: 6-08-2007

GL: 5803' KB: 5815'

Injection Wellbore Diagram

SURFACE CASING

CSG SIZE: 8-5/8"

GRADE: J-55

WEIGHT: 24#

LENGTH: 7jts (312.91')

DEPTH LANDED: 322.91'

HOLE SIZE: 12-1/4"

CEMENT DATA: 160sxs Class "G" cmt, circ 5 bbls to surf.

PRODUCTION CASING

CSG SIZE: 5-1/2"

GRADE: J-55

WEIGHT: 15.5#

LENGTH: 133jts (5855.48')

DEPTH LANDED: 5852.48'

HOLE SIZE: 7-7/8"

CEMENT DATA: 325sxs Premlite II & 425sxs 50/50 POZ.

CEMENT TOP AT: 68' per CBL 5/30/07

TUBING

SIZE/GRADE/WT.: 2-7/8" / J-55 / 6.5#

NO. OF JOINTS: 123 jts (3778')

SEATING NIPPLE: 2-7/8" (1.10')

SN LANDED AT: 3790' KB

ON/OFF TOOL AT: 3791.1'

ARROW #1 PACKER CE AT: 3796.4'

XO 2-3/8 x 2-7/8 J-55 AT: 3800.1'

TBG PUP 2-3/8 J-55 AT: 3800.6'

X/N NIPPLE AT: 3804.8'

TOTAL STRING LENGTH: EOT @ 3806.3'

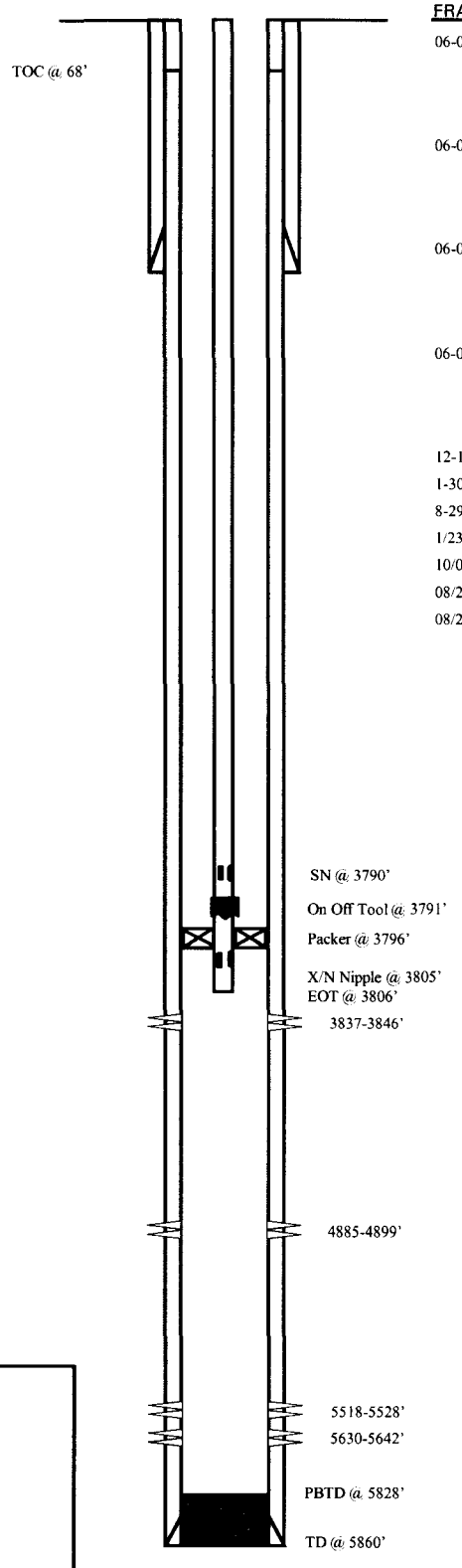

FRAC JOB

06-05-07	5630-5642'	**Frac CP5 sands as follows:** 39984# 20/40 sand in 405 bbls Lightning 17 frac fluid. Treated @ avg press of 1953 psi w/avg rate of 24.7 BPM. ISIP 2165 psi. Calc flush: 5328 gal. Actual flush: 5208 gal.
06-05-07	5518-5528'	**Frac CP4 sands as follows:** 25037# 20/40 sand in 336 bbls Lightning 17 frac fluid. Treated @ avg press of 2283 psi w/avg rate of 24.7 BPM. ISIP 2241 psi. Calc flush: 5516 gal. Actual flush: 4998 gal.
06-05-07	4885-4899'	**Frac A1 sands as follows:** 59792# 20/40 sand in 485 bbls Lightning 17 frac fluid. Treated @ avg press of 1701 psi w/avg rate of 24.7 BPM. ISIP 2240 psi. Calc flush: 4883 gal. Actual flush: 4368 gal.
06-05-07	3837-3846'	**Frac GB2 sands as follows:** 35741# 20/40 sand in 345 bbls Lightning 17 frac fluid. Treated @ avg press of 1806 w/ avg rate of 24.7 BPM. ISIP 2950 psi. Calc flush: 3835 gal. Actual flush: 3738 gal.
12-13-07		**Pump Change.** Updated rod & tubing details.
1-30-08		**Pump Change**. Updated rod & tubing details.
8-29-08		**Pump Change**. Updated rod &tubing details.
1/23/09		**Pump Change**. Updated r & t details.
10/05/11		**Pump Change**. Rods & tubing updated.
08/21/13		**Convert to Injection Well**
08/23/13		**Conversion MIT Finalized** – update tbg detail

PERFORATION RECORD

05-30-07	5630-5642'	4 JSPF	48 holes
06-05-07	5518-5528'	4 JSPF	40 holes
06-05-07	4885-4899'	4 JSPF	96 holes
06-05-07	3837-3846'	4 JSPF	36 holes

NEWFIELD

Federal 9-22-9-16

2079' FSL & 668' FEL

NE/SE Section 22-T9S-R16E

Duchesne Co, Utah

API # 43-013-33175; Lease # UTU-74392

LCN 08/26/13

ATTACHMENT E-6

FEDERAL 10-22-9-16

Spud Date: 04/26/07
Put on Production: 06/29/07

GL: 5955' KB: 5967'

Wellbore Diagram

Initial Production: BOPD, MCFD, BWPD

SURFACE CASING

CSG SIZE: 8-5/8"

GRADE: J-55

WEIGHT: 24#

LENGTH: 7 jts. (310.97')

DEPTH LANDED: 322.82' KB

HOLE SIZE:12-1/4"

CEMENT DATA: 160 sxs Class "G" cmt, est 6 bbls cmt to surf.

PRODUCTION CASING

CSG SIZE: 5-1/2"

GRADE: J-55

WEIGHT: 15.5#

LENGTH: 133 jts. (5904.01')

DEPTH LANDED: 5917.26' KB

HOLE SIZE: 7-7/8"

CEMENT DATA: 300 sxs Prem. Lite II mixed & 425 sxs 50/50 POZ.

CEMENT TOP: 160'

TUBING

SIZE/GRADE/WT.: 2-7/8" / J-55 / 6.5#

NO. OF JOINTS: 182 jts (5685.0')

TUBING ANCHOR: 5697.0' KB

NO. OF JOINTS: 1 jts (31.4')

SEATING NIPPLE: 2-7/8" (1.10')

SN LANDED AT: 5731.2' KB

NO. OF JOINTS: 1 jts (31.7')

TOTAL STRING LENGTH: EOT @ 5764' KB

SUCKER RODS

POLISHED ROD: 1-1/2" x 26' SM polished rods

SUCKER RODS: 2 x ¾" – 8' pony rod, 1 x ¾" = 6' pony rod, 1 x ¾" = 8" pony rod, 98-3/4" = 2450' guided rods, 93- ¾" = 2325' sucker rods, 30- ¾" = 750' guided rods, 6-1 ½" = 150' weight bars

PUMP SIZE: 2 1/2" x 1 1/4" x 12 x 16' RHAC

STROKE LENGTH: 86"

PUMP SPEED, SPM: 5

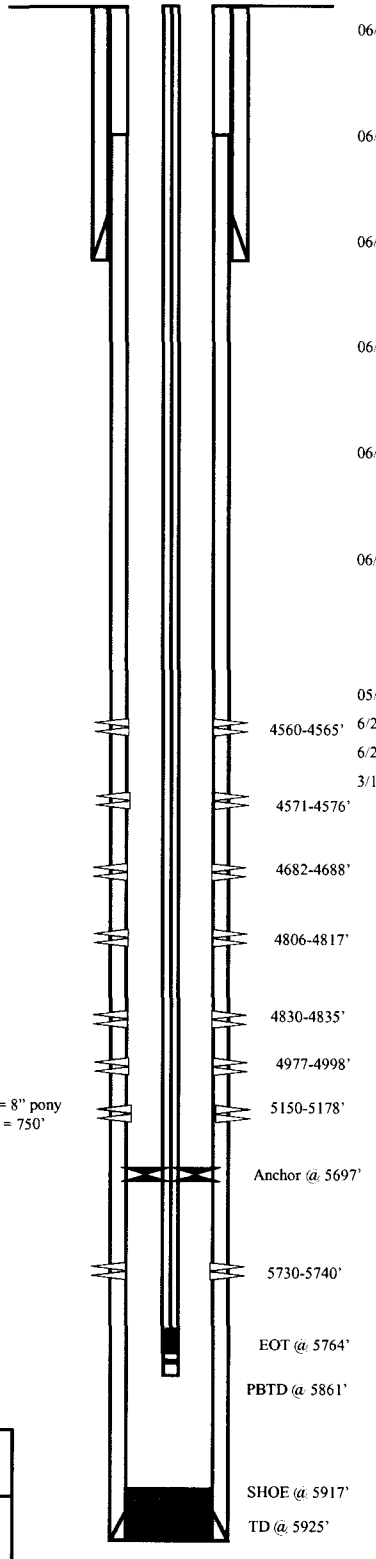

FRAC JOB

06/25/07 5730-5740' **Frac CP5 sands as follows:** 40069# 20/40 sand in 408 bbls Lightning 17 frac fluid. Treated @ avg press of 1945 psi w/avg rate of 24.7 BPM. ISIP 2163 psi. Calc flush: 5728 gal. Actual flush: 5208 gal.

06/26/07 5150-5178' **Frac LODC sands as follows:** 126558# 20/40 sand in 899 bbls Lightning 17 frac fluid. Treated @ avg press of 2216 psi w/avg rate of 24.7 BPM. ISIP 2676 psi. Calc flush: 5148 gal. Actual flush: 4662 gal.

06/26/07 4977-4998' **Frac A1 sands as follows:** 94957# 20/40 sand in 708 bbls Lightning 17 frac fluid. Treated @ avg press of 1623 psi w/avg rate of 24.7 BPM. ISIP 1945 psi. Calc flush: 4975 gal. Actual flush: 4494 gal.

06/26/07 4806-4835' **Frac B2 & B1 sands as follows:** 61885# 20/40 sand in 508 bbls Lightning 17 frac fluid. Treated @ avg press of 1689 psi w/avg rate of 24.7 BPM. ISIP 1825 psi. Calc flush: 4804 gal. Actual flush: 4326 gal.

06/26/07 4682-4688' **Frac D3 sands as follows:** 12609# 20/40 sand in 241 bbls Lightning 17 frac fluid. Treated @ avg press of 2133 psi w/avg rate of 24.7 BPM. ISIP 1776 psi. Calc flush: 4680 gal. Actual flush: 4221 gal.

06/26/07 4560-4565' **Frac D1 sands as follows:** 16073# 20/40 sand in 246 bbls Lightning 17 frac fluid. Treated @ avg press of 1881 psi w/avg rate of 24.7 BPM. ISIP 1857 psi. Calc flush: 4558 gal. Actual flush: 4494 gal.

05/28/08 pump change. Updated rod and tubing details

6/21/2010 Parted rods. Updated rod and tubing detail.

6/23/2010 Parted rods. Updated rod and tubing detail.

3/15/11 Parted rods. Updated rod and tubing detail.

PERFORATION RECORD

06/21/07	5730-5740'	4 JSPF	40 holes
06/25/07	5150-5178'	4 JSPF	112 holes
06/26/07	4977-4998'	4 JSPF	84 holes
06/26/07	4830-4835'	4 JSPF	20 holes
06/26/07	4806-4817'	4 JSPF	44 holes
06/26/07	4682-4688'	4 JSPF	24 holes
06/26/07	4571-4576'	4 JSPF	20 holes
06/26/07	4560-4565'	4 JSPF	20 holes

NEWFIELD

FEDERAL 10-22-9-16

1736'FSL & 2137' FEL

NW/SE Section 22-T9S-R16E

Duchesne Co, Utah

API #43-013-33166; Lease # UTU-74392

VC 5/23/2011

ATTACHMENT E-7

FEDERAL 16-22-9-16

Spud Date: 08/27/07

Put on Production: 10/10/07

GL: 5800' KB: 5812'

Injection Wellbore Diagram

SURFACE CASING

CSG SIZE: 8-5/8"

GRADE: J-55

WEIGHT: 24#

LENGTH: 7 jts. (293.76')

DEPTH LANDED: 305.61' KB

HOLE SIZE:12-1/4"

CEMENT DATA: 160 sxs Class "G" cmt, est 6 bbls cmt to surf.

PRODUCTION CASING

CSG SIZE: 5-1/2"

GRADE: J-55

WEIGHT: 15.5#

LENGTH: ? jts. (')

DEPTH LANDED: 6051' KB

HOLE SIZE: 7-7/8"

CEMENT DATA: 350 sxs Prem. Lite II mixed & 525 sxs 50/50 POZ.

CEMENT TOP: 39'

TUBING

SIZE/GRADE/WT.: 2-7/8" / N-80 / 6.5#

NO. OF JOINTS: 42 jts (1309')

SIZE/GRADE/WT.: 2-7/8" / J-55 / 6.5#

NO. OF JOINTS: 108 jts (3375.7')

SEATING NIPPLE: 2-7/8" (1.10')

SN LANDED AT: 4696.7' KB

ON/OFF TOOL AT: 4697.8'

X-SEAL LANDED AT: 4699.3' KB

ARROW #1 PACKER CE AT: 4703.09'

XO 2-3/8 x 2-7/8 J-55 AT: 4706.6'

TBG PUP 2-3/8 J-55 AT: 4707.1'

X/N NIPPLE AT: 4711.1'

TOTAL STRING LENGTH: EOT @ 4713'

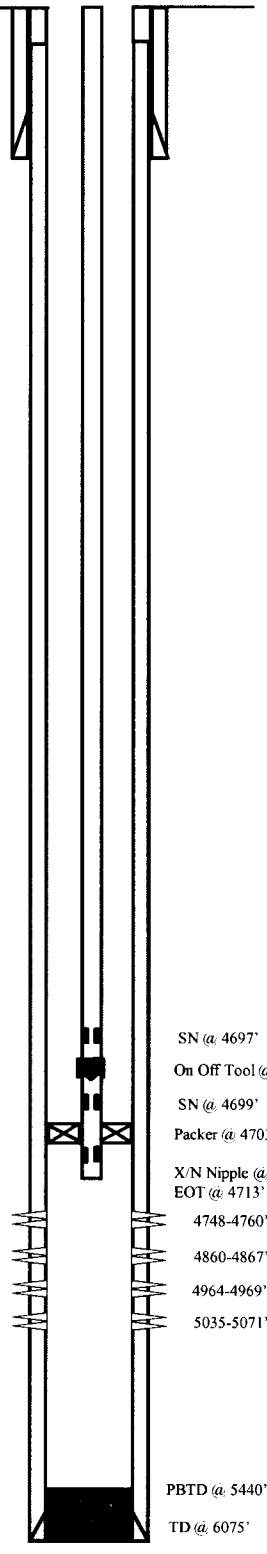

FRAC JOB

10/05/07	5035-5071'	**Frac A1 sands as follows:** 140366# 20/40 sand in 1008 bbl Lightning 17 frac fluid. Treated @ avg press of 1851 psi w/avg rate of 24.8 BPM. ISIP 2081 psi. Calc flush: 5033 gal. Actual flush: 4536 gal.
10/06/07	4964-4969'	**Frac A.5 sands as follows:** 15004# 20/40 sand in 274 bbls Lightning 17 frac fluid. Treated @ avg press of 2605 psi w/avg rate of 24.8 BPM. ISIP 1909 psi. Calc flush: 4962 gal. Actual flush: 4456 gal.
10/05/07	4860-4867'	**Frac B2 sands as follows:** 13965# 20/40 sand in 269 bbls Lightning 17 frac fluid. Treated @ avg press of 2130 psi w/avg rate of 24.8 BPM. ISIP 1925 psi. Calc flush: 4858 gal. Actual flush: 4355 gal.
10/05/07	4748-4760'	**Frac C sands as follows:** 41811# 20/40 sand in 406 bbls Lightning 17 frac fluid. Treated @ avg press of 2620 psi w/avg rate of 24.8 BPM. ISIP 2235 psi. Calc flush: 4746 gal. Actual flush: 4662 gal.
6/17/08		**Parted rods**. Updated rod and tubing detail
11/19/08		**Pump Change**. Updated rod &tubing details.
2/13/09		**Tubing Leak**. Updated r & t details.
6/18/2010		**Tubing leak.** Updated rod and tubing detail.
11/21/12		**Convert to Injection Well**
11/27/12		**Conversion MIT Finalized** – update tbg detail

PERFORATION RECORD

10/02/07	5035-5071'	4 JSPF	144 holes
10/05/07	4964-4969'	4 JSPF	20 holes
10/05/07	4860-4867'	4 JSPF	28 holes
10/05/07	4748-4760'	4 JSPF	48 holes

NEWFIELD

FEDERAL 16-22-9-16

2068'FSL & 649' FEL

NE/SE Section 22-T9S-R16E

Duchesne Co, Utah

API #43-013-33394; Lease # UTU-74392

LCN 11/29/12

ATTACHMENT E-8

Federal 4-23-9-16

Spud Date: 01-09-08
Put on Production: 3-10-08
GL: 5716' KB: 5728'

Wellbore Diagram

SURFACE CASING

CSG SIZE: 8-5/8"
GRADE: J-55
WEIGHT: 24#
LENGTH: 7 jts. (312.55')
HOLE SIZE: 12-1/4"
CEMENT DATA: 160 sxs Class "G" cmt

PRODUCTION CASING

CSG SIZE: 5-1/2"
GRADE: J-55
WEIGHT: 15.5#
LENGTH: 133jts. (5715.22')
HOLE SIZE: 7-7/8"
DEPTH LANDED: 5728.47'
CEMENT DATA: 300 sk Prem. Lite II mixed & 400 sxs 50/50 POZ.
CEMENT TOP AT: 134'

TUBING

SIZE/GRADE/WT.: 2-7/8" / J-55 / 6.5#
NO. OF JOINTS: 175 jts (5507.16')
TUBING ANCHOR: 5519.16'
NO. OF JOINTS: 1 jts (31.39')
SEATING NIPPLE: 2-7/8" (1.10')
SN LANDED AT: 5553.35' KB
NO. OF JOINTS: 1 jts (31.48')
TOTAL STRING LENGTH: EOT @ 5586.38' w/12' KB

SUCKER RODS

POLISHED ROD: 1-1/2" x 26'
SUCKER RODS: 1-6', 1-4' & 1-2' X ¾" ponies, 100-3/4" guided rods, 95- ¾" plain rods, 20-3/4" guided rods, 6- 1 ½" weighted bars.
PUMP SIZE: 2-1/2" x 1-1/2" x 12' X 15.5' RHAC pump w/ SM plunger
STROKE LENGTH: 86"
PUMP SPEED, SPM:4

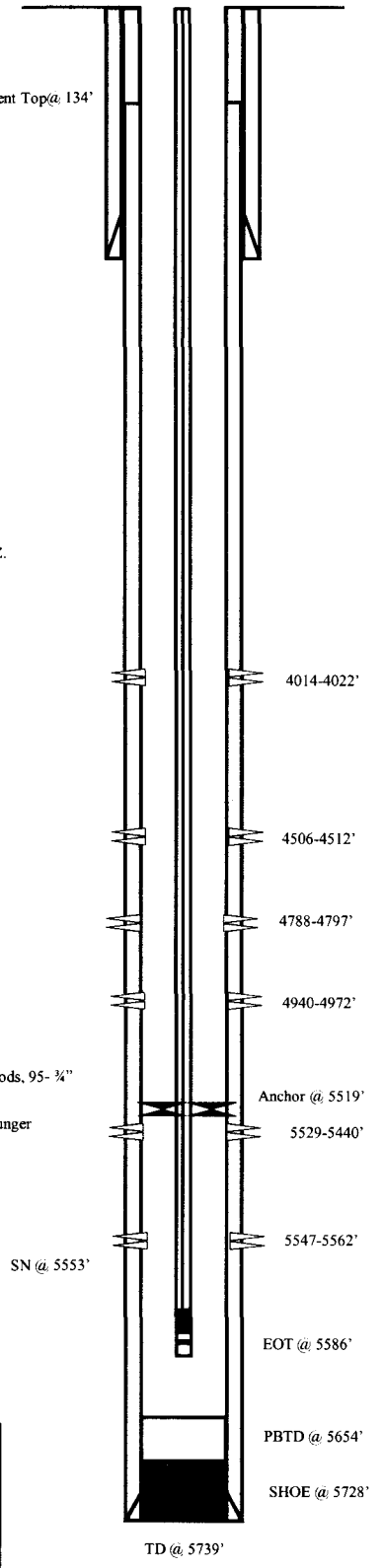

FRAC JOB

2-29-08	5547-5562'	**Frac CP4 sands as follows:** Frac with 40523# 20/40 sand in 434 bbls Lightning 17 fluid. Treat at an ave pressure of 1786 psi @ 23.2 BPM. ISIP 1970 psi.
2-29-08	5429-5440'	**Frac CP2 sands as follows:** Frac with 20386 # 20/40 sand in 333 bbls Lightning 17 fluid. Treat at an ave pressure of 1963 psi @ 25 BPM. ISIP 1840 psi.
2-29-08	4940-4972'	**Frac A1 sands as follows:** Frac with 120556 #'s 20/40 sand in 869 bbls Lightning 17 fluid. Treat at an ave pressure of 1845 psi @ 24.5 BPM. ISIP 2105 psi.
2-29-08	4788-4797'	**Frac B2 sand as follows:** Frac with 50665 #'s of 20/40 sand in 450 bbls Lightning 17 fluid. Treat at an ave pressure of 1990 psi @ 24.5 BPM. ISIP 1945 psi.
2-29-08	4506-4512'	**Frac D1 sands as follows:** Frac with 15200 #'s 20/40 sand in 259 bbls Lightning 17 fluid. Treat at an ave pressure of 1942 psi @ 24.3 BPM. ISIP 1825 psi.
2-29-08	4014-4022'	**Frac GB6 sands as follows:** Frac with 40122 #'s 20/40 sand in 384 bbls Lightning 17 fluid. Treat at an ave pressure of 2036 psi @ 24.3 BPM. ISIP 1880 psi.

PERFORATION RECORD

4014-4022'	4 JSPF	32 holes
4506-4512'	4 JSPF	24 holes
4788-4797'	4 JSPF	36 holes
4940-4972'	4 JSPF	128 holes
5429-5440'	4 JSPF	44 holes
5547-5562'	4 JSPF	60 holes

NEWFIELD

Federal 4-23-9-16
499' FNL & 685' FWL
NWNW Section 23-T9S-R16E
Duchesne Co, Utah
API #43-013-33177; Lease #UTU-15855

TL 5-28-08

ATTACHMENT E-9

Federal 5-23-9-16

Spud Date: 1/17/08

Put on Production: 3-5-08

GL: 5749' KB: 5761'

SURFACE CASING

CSG SIZE: 8-5/8"

GRADE: J-55

WEIGHT: 24#

LENGTH: 7 jts. (311.39')

HOLE SIZE: 12-1/4"

DEPTH LANDED: 323.24'

CEMENT DATA: 160 sxs Class "G" cmt

PRODUCTION CASING

CSG SIZE: 5-1/2"

GRADE: J-55

WEIGHT: 15.5#

LENGTH: 146 jts. (5781.03')

HOLE SIZE: 7-7/8"

DEPTH LANDED: 5814.84'

CEMENT DATA: 300 sk Prem. Lite II mixed & 400 sxs 50/50 POZ.

CEMENT TOP AT: 100'

TUBING

SIZE/GRADE/WT.: 2-7/8" / J-55 / 6.5#

NO. OF JOINTS: 123 jts (3915.9')

SEATING NIPPLE: 2-7/8" (1.10')

SN LANDED AT: 3927.9' KB

ON/OFF TOOL AT: 3929.0'

ARROW #1 PACKER CE AT: 3934.8'

XO 2-3/8 x 2-7/8 J-55 AT: 3937.7'

TBG PUP 2-3/8 J-55 AT: 3938.2'

X/N NIPPLE AT: 3944.4'

TOTAL STRING LENGTH: EOT @ 3946'

Injection Wellbore Diagram

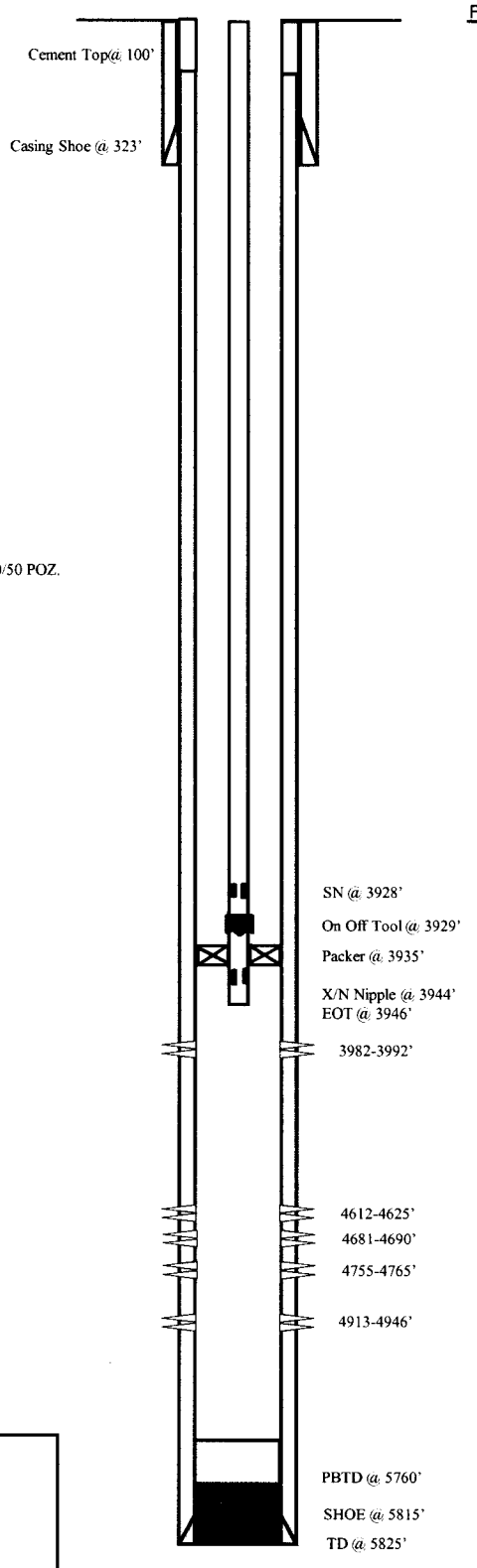

FRAC JOB

2-27-08	4913-4946'	**Frac A1 sands as follows:** Frac with 160392 #'s of 20/40 sand in 1152 bbls Lightning 17 fluid. Treat at an ave pressure of 1802 psi @ 23.2 BPM. ISIP 2132 psi.
2-27-08	4755-4765'	**Frac B2 sands as follows:** Frac with 40119 #'s of 20/40 sand in 422 bbls Lightning 17 fluid. Treat at an ave pressure of 1740 psi @ 23.2 BPM. ISIP 1900 psi.
2-27-08	4681-4690'	**Frac B.5 sands as follows:** Frac with 15432 #'s of 20/40 sand in 275 bbls Lightning 17 fluid. Treat at an ave pressure of 2350 psi @ 23.3 BPM. ISIP 1943 psi.
2-27-08	4612-4625'	**Frac C sand as follows:** Frac with 60639 #'s of 20/40 sand in 500 bbls of Lightning 17 fluid. Treat at an ave pressure of 2137 psi @ 23.2 BPM. ISIP 2346 psi.
2-27-08	3982-3992'	**Frac GB6 sands as follows:** Frac with 46568 #'s of 20/40 sand in 418 bbls of Lightning 17 fluid. Treat at an ave pressure of 1726 psi @ 23.3 BPM. ISIP 1825 psi.
1/24/09		**Pump Change**. Updated r & t details.
12/11/12		**Convert to Injection Well**
12/12/12		**Conversion MIT Finalized** – update tbg detail

PERFORATION RECORD

3982-3992'	4 JSPF	40 holes
4612-4625'	4 JSPF	52 holes
4681-4690'	4 JSPF	36 holes
4755-4765'	4 JSPF	40 holes
4913-4946'	4 JSPF	132 holes

NEWFIELD

Federal 5-23-9-16
2125' FNL & 595' FWL
SWNW Section 23-T9S-R16E
Duchesne Co, Utah
API #43-013-32960; Lease #UTU-15855

LCN 12/17/12

ATTACHMENT E-10

FEDERAL 11-23-9-16

Spud Date: 1-15-08

Put on Production: 3-7-08

GL: 5726' KB: 5738'

Injection Wellbore Diagram

SURFACE CASING

CSG SIZE: 8-5/8"

GRADE: J-55

WEIGHT: 24#

LENGTH: 7 jts (309.09')

DEPTH LANDED: 320.94' KB

HOLE SIZE:12-1/4"

CEMENT DATA: 160 sxs Class "G" cmt, est 3 bbls cmt to surf.

PRODUCTION CASING

CSG SIZE: 5-1/2"

GRADE: J-55

WEIGHT: 15.5#

LENGTH: 134 jts. (5775.25')

DEPTH LANDED: 5768.37' KB

HOLE SIZE: 7-7/8"

CEMENT DATA: 300 sxs Prem. Lite II mixed & 400 sxs 50/50 POZ.

CEMENT TOP AT: 26'

TUBING

SIZE/GRADE/WT.: 2-7/8" / J-55 / 6.5#

NO. OF JOINTS: 124 jts (3903.0')

SEATING NIPPLE: 2-7/8" (1.10')

SN LANDED AT: 3915.0' KB

ON/OFF TOOL AT: 3916.1'

ARROW #1 PACKER CE AT: 3922'

XO 2-3/8 x 2-7/8 J-55 AT: 3925.1'

TBG PUP 2-3/8 J-55 AT: 3925.6'

X/N NIPPLE AT: 3929.8'

TOTAL STRING LENGTH: EOT @ 3931'

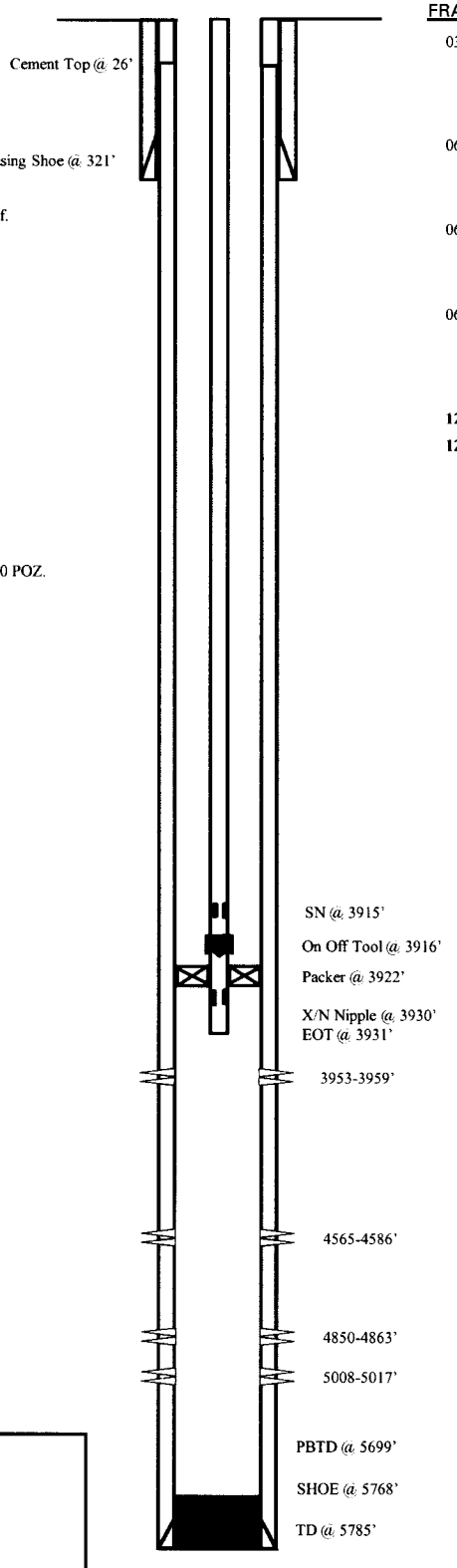

FRAC JOB

03-04-08	4565-4586'	**Frac C sands as follows:** 90836# 20/40 sand in 686 bbls Lightning 17 frac fluid. Treated @ avg press of 2017 psi w/avg rate of 23.1 BPM. ISIP 2180 psi. Calc flush: 4563 gal. Actual flush:4477 gal.
06/05/2008	3953-3959'	**Frac GB6, sands as follows:** 16621# 20/40 sand in 206 bbls Lightning 17 frac fluid. Treated @ avg. press. of 2261 psi w/avg. rate of 15 BPM. ISIP 1696 psi.
06/05/2008	4850-4863'	**Frac A1, sands as follows:** 50043# 20/40 sand in 446 bbls Lighting 17 frac fluid. Treated @ ave. press. of 3342 psi w/avg. rate 15 BPM. ISIP 2218 psi.
06/05/2008	5008-5017'	**Frac LODC, sands as follows:** 45090# 20/40 sand in 445 bbls of Lightning 17 frac fluid. Treated @ ave. press. of 4224 psi w/avg. rate 15 BPM W/ 6.5 ppg of sand. ISIP 3173 psi.
12/13/12		**Convert to Injection Well**
12/13/12		**Conversion MIT Finalized** – update tbg detail

PERFORATION RECORD

02-29-08	4565-4586'	4 JSPF	84 holes
06-05-08	3953-3959'	4 JSPF	24 holes
06-05-08	4850-4863'	4 JSPF	52 holes
06-05-08	5008-5017'	4 JSPF	36 holes

NEWFIELD

FEDERAL 11-23-9-16

2236' FSL & 1922' FWL

NE/SW Section 23-T9S-R16E

Duchesne Co, Utah

API #43-013-33178; Lease # UTU-15855

LCN 12/18/12

ATTACHMENT E-11

Castle Peak Federal 6-23-9-16

Spud Date: 7-30-84

Put on Production: 9-11-84

GL: 5725' KB: 5739'

Injection Wellbore Diagram

SURFACE CASING

CSG SIZE: 8-5/8"

GRADE: J-55

WEIGHT: 24#

LENGTH: 7 jts. (295.0')

DEPTH LANDED: 295'

HOLE SIZE: 12-1/4"

CEMENT DATA: 210sxs Class "G" cmt + 2" CaCl + sk Flocele.

PRODUCTION CASING

CSG SIZE: 5-1/2"

GRADE: J-55

WEIGHT: 17#

LENGTH: 140 jts.(5497.24')

HOLE SIZE: 7-7/8"

DEPTH LANDED: 5495.95'

CEMENT DATA: 120 sxs Lodense, 250 sxs Gypseal.

CEMENT TOP AT:000'

TUBING

SIZE/GRADE/WT.: 2-7/8" / J-55 / 6.5#

NO. OF JOINTS: 145 jts (4545.3')

SEATING NIPPLE: 2-7/8" (1.10')

SN LANDED AT: 4558.3' KB

ON/OFF TOOL AT: 4559.4'

ARROW #1 PACKER CE AT: 4564.6'

XO 2-3/8 x 2-7/8 J-55 AT: 4568.3'

TBG PUP 2-3/8 J-55 AT: 4569'

X/N NIPPLE AT: 4573.1'

TOTAL STRING LENGTH: EOT @ 4574.65'

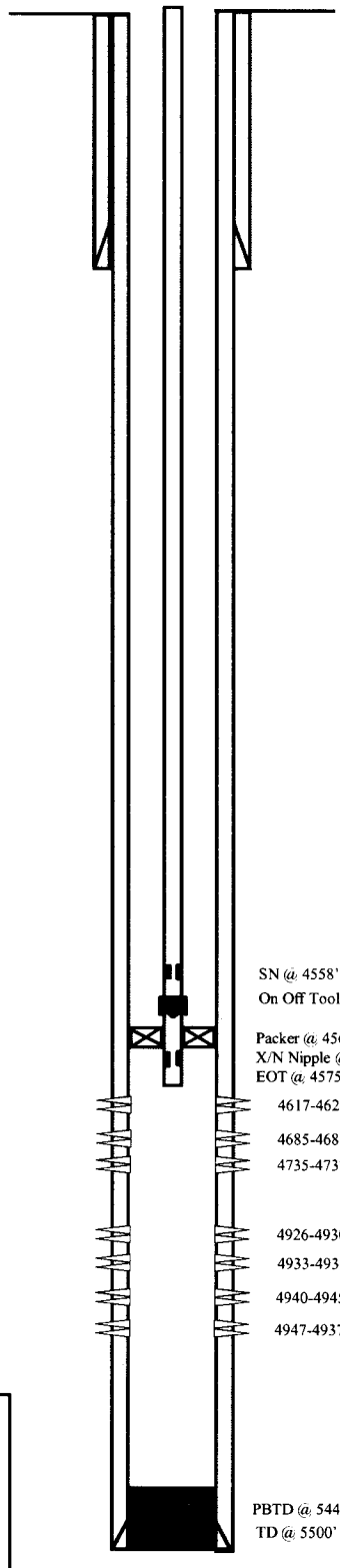

FRAC JOB

8-22-84	**4926-4949'**	**Frac sands as follows:** Frac with 28500# 20/40 sand in 96500bbls Lighting 17 fluid.
3/12/11		**Tubing Leak.** Updated rod and tubing detail
02/27/14	**4685-4737'**	**Frac B.5 & B2 sands as follows:** 22138# 20/40 sand in 282 bbls Lightning 17 frac fluid.
02/27/14	**4685-4737'**	**Frac C sands as follows:** 31402# 20/40 sand in 282 bbls Lightning 17 frac fluid.
03/04/14		**Conversion MIT Finalized** – update tbg detail

PERFORATION RECORD

4926-4930'	1 JSPF	4 holes
4933-4937'	1 JSPF	4 holes
4940-4945'	1 JSPF	5 holes
4947-4949'	1 JSPF	2 holes
4735-4737'	3 JSPF	6 holes
4685-4687'	3 JSPF	6 holes
4617-4625'	3 JSPF	24 holes

NEWFIELD

Castle Peak Federal 6-23-9-16

1970'FWL & 1980 'FNL

Section 23, T9S, R16E

Duchesne Co, Utah

API # 43-013-30873; Lease # UTU-15855

ATTACHMENT E-12

FEDERAL 12-23-9-16

Spud Date: 2/5/08
Put on Production: 5/22/08

GL: 5774' KB: 5786'

Wellbore Diagram

Initial Production: BOPD, MCFD, BWPD

SURFACE CASING

CSG SIZE: 8-5/8"
GRADE: J-55
WEIGHT: 24#
LENGTH: 8 jts (322.64')
DEPTH LANDED: 333'
HOLE SIZE: 12-1/4"
CEMENT DATA: To surface with 160 sx Class "G" cmt

PRODUCTION CASING

CSG SIZE: 5-1/2"
GRADE: J-55
WEIGHT: 15.5#
LENGTH: 141 jts
DEPTH LANDED: 5718.33' KB
HOLE SIZE: 7-7/8"
CEMENT DATA: 300 sxs Prem. Lite II mixed & 400 sxs 50/50 POZ.
CEMENT TOP: 104'

TUBING

SIZE/GRADE/WT.: 2-7/8" / J-55 / 6.5#
NO. OF JOINTS: 155 jts (4873.6')
TUBING ANCHOR: 4885.6' KB
NO. OF JOINTS: 1 jts (31.45')
SEATING NIPPLE: 2-7/8" (1.10')
SN LANDED AT: 4919.9' KB
NO. OF JOINTS: 2 jts (62.6')
TOTAL STRING LENGTH: EOT @ 4984' KB

SUCKER RODS

POLISHED ROD: 1-1/2" x 26' polished rod
SUCKER RODS: 1-8'x ¾" pony rod, 1- 6'x ¾" pony rod, 2- 8'x ¾" pony rod, 1- 2'x ¾" pony rod, 91- ¾" guided rods, 58- ¾" sucker rods, 40- ¾" guided rods, 6- 1 ½" weight bars
PUMP SIZE: 2-1/2" x 1-1/2" x 12x 16' RHAC
STROKE LENGTH: 72"
PUMP SPEED, SPM: 4

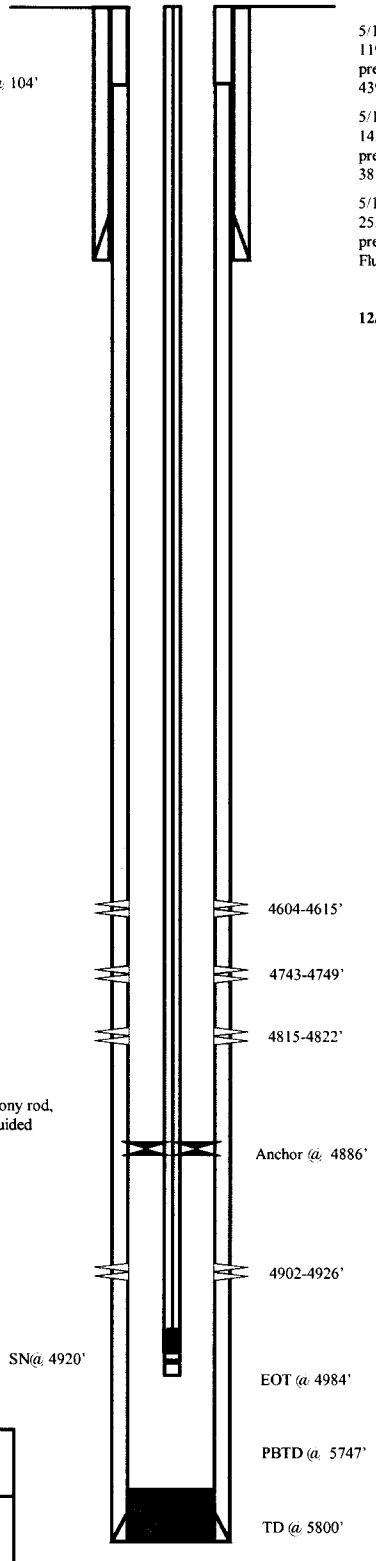

FRAC JOB

5/17/08 4902-4926' **Frac A3 sds as follows:**
119,316# 20/40 sand in 996 bbls of Lightning 17 fluid. Treated w/ ave pressure of 1818 psi w/ ave rate of 23.4 BPM. ISIP 2198 psi. Actual Flush: 4397 gal.

5/17/08 4815-4822' **Frac A.5 sds as follows:**
14,762# 20/40 sand in 260 bbls of Lightning 17 fluid. Treated w/ ave pressure of 3169 psi w/ ave rate of 23.3 BPM. ISIP 4200 psi. Actual Flush: 3818 gal.

5/17/08 4743-4749' **Frac B2 sds as follows:**
25,365# 20/40 sand in 342 bbls of Lightning 17 fluid. Treated w/ ave pressure of 2818 psi w/ ave rate of 21.6 BPM. ISIP 3290 psi. Actual Flush:4238 gal.

12/12/2009 **Tubing leak.** Updated rod and tubind detail.

PERFORATION RECORD

10/23/07	4604-4615'	4 JSPF	44 holes
10/26/07	4743-4749'	4 JSPF	24 holes
10/23/07	4815-4822'	4 JSPF	28 holes
10/26/07	4902-4926'	4 JSPF	96 holes

NEWFIELD

FEDERAL 12-23-9-16

2120'FSL & 794' FWL

NW/SW Section 23-T9S-R16E

Duchesne Co, Utah

API #43-013-33179; Lease # UTU-15855

ML 1/7/2010

ATTACHMENT E-13

Federal 13-23-9-16

Spud Date: 10/5/07

Put on Production: 6/5/08

GL: 5751' KB: 5763'

Injection Wellbore Diagram

SURFACE CASING

CSG SIZE: 8-5/8"

GRADE: J-55

WEIGHT: 24#

LENGTH: 7 jts. (312.58')

DEPTH LANDED: 322.58'

HOLE SIZE:12-1/4"

CEMENT DATA: 160 sxs Class "G" cmt, circ. 4 bbls to surf.

PRODUCTION CASING

CSG SIZE: 5-1/2"

GRADE: J-55

WEIGHT: 15.5#

LENGTH: 150 jts. (5720.33')

DEPTH LANDED: 5718.33'

HOLE SIZE: 7-7/8"

CEMENT DATA: 300 sxs Premlite II & 400 sxs 50/50 POZ.

CEMENT TOP: 118' per CBL 10/23/07

TUBING

SIZE/GRADE/WT.: 2-7/8" / J-55 / 6.5#

NO. OF JOINTS: 124 jts (3777.2')

SEATING NIPPLE: 2-7/8" (1.10')

SN LANDED AT: 3789.2' KB

ON/OFF TOOL AT: 3790.3'

ARROW #1 PACKER CE AT: 3795.1'

XO 2-3/8 x 2-7/8 J-55 AT: 3798.7'

TBG PUP 2-3/8 J-55 AT: 3799.2'

X/N NIPPLE AT: 3803.3'

TOTAL STRING LENGTH: EOT @ 3804.94'

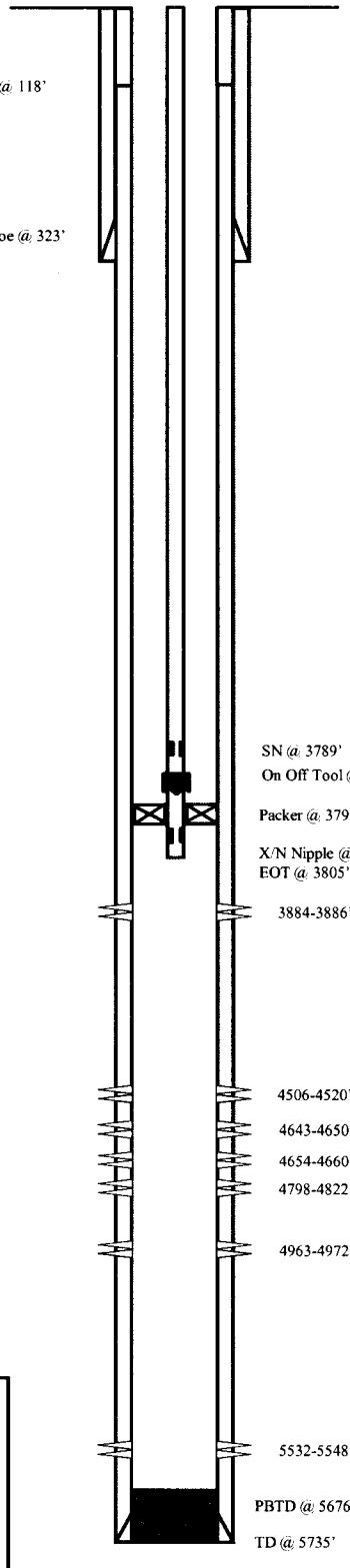

FRAC JOB

10/26/07	5532-5548'	**Frac CP5 sands as follows:** 89901# 20/40 sand in 710 bbls Lightning 17 frac fluid. Treated @ avg press of 1990 psi w/avg rate of 24.8 BPM. ISIP 2180 psi.
10/26/07	4963-4972'	**Frac LODC sands as follows:** 56448# 20/40 sand in 493 bbl Lightning 17 frac fluid. Treated @ avg press of 2830 psi w/avg rate of 24.8 BPM. ISIP 3045 psi.
06/03/08	4798-4822'	**Frac A1 sands as follows:** 159955# 20/40 sand in 1112 bbls Lightning 17 frac fluid. Treated @ avg press of 1807 psi w/avg rate of 26.6 BPM. ISIP 1971 psi.
06/03/08	4643-4600'	**Frac B2 sands as follows:** 99834# 20/40 sand in 748 bbls Lightning 17 frac fluid. Treated @ avg press of 1930 psi w/avg rate of 25.5 BPM. ISIP 2135 psi.
06/03/08	4874-4888'	**Frac C sands as follows:** 79546# 20/40 sand in 617 bbls Lightning 17 frac fluid. Treated @ avg press of 2034 psi w/avg rate of 26.3 BPM. ISIP 1907 psi.
3/16/10		**Pump change.** Updated rod and tubing detail.
1/8/2011		**Pump Change.** Update rod and tubing details.
10/10/13	3884-3886'	**Frac GB6 sands as follows:** 17000# 20/40 sand in 182 bbls Lightning 17 frac fluid
10/11/13		**Convert to Injection Well**
10/16/13		**Conversion MIT Finalized** – update tbg detail

PERFORATION RECORD

5532-5548'	4 JSPF	64 holes
4963-4972'	4 JSPF	36 holes
4798-4822'	4 JSPF	96 holes
4654-4660'	4 JSPF	24 holes
4643-4650'	4 JSPF	28 holes
4506-4520'	4 JSPF	56 holes
3884-3886'	3 JSPF	6 holes

NEWFIELD

Federal 13-23-9-16

612' FSL & 466' FWL

SW/SW Section 23-T9S-R16E

Duchesne Co, Utah

API #43-013-33180; Lease # UTU-74392

LCN 10/18/13

ATTACHMENT E-14

Jonah Federal 16-15-9-16

Spud Date:12/28/05

Put on Production: 02/02/06

GL: 5704' KB: 5716'

Injection Wellbore Diagram

SURFACE CASING

CSG SIZE: 8-5/8"

GRADE: J-55

WEIGHT: 24#

LENGTH: 7 jts. (315.16')

DEPTH LANDED: 327.01' KB

HOLE SIZE:12-1/4"

CEMENT DATA: 160 sxs Class "G" cmt, est 5 bbls cmt to surf.

PRODUCTION CASING

CSG SIZE: 5-1/2"

GRADE: J-55

WEIGHT: 15.5#

LENGTH: 136 jts. (5818.63')

DEPTH LANDED: 5817.88' KB

HOLE SIZE: 7-7/8"

CEMENT DATA: 350 sxs Prem. Lite II mixed & 450 sxs 50/50 POZ.

CEMENT TOP: 150'

TUBING

SIZE/GRADE/WT.: 2-7/8" / J-55 / 6.5#

NO. OF JOINTS: 138 jts (3937')

SEATING NIPPLE: 2-7/8" (1.10')

SN LANDED AT: 3949' KB

ON/OFF TOOL AT: 3950.1'

ARROW #1 PACKER CE AT: 3956.2'

XO 2-3/8 x 2-7/8 J-55 AT: 3959.2'

TBG PUP 2-3/8 J-55 AT: 3959.7'

X/N NIPPLE AT: 3963.9'

TOTAL STRING LENGTH: EOT @ 3965.49'

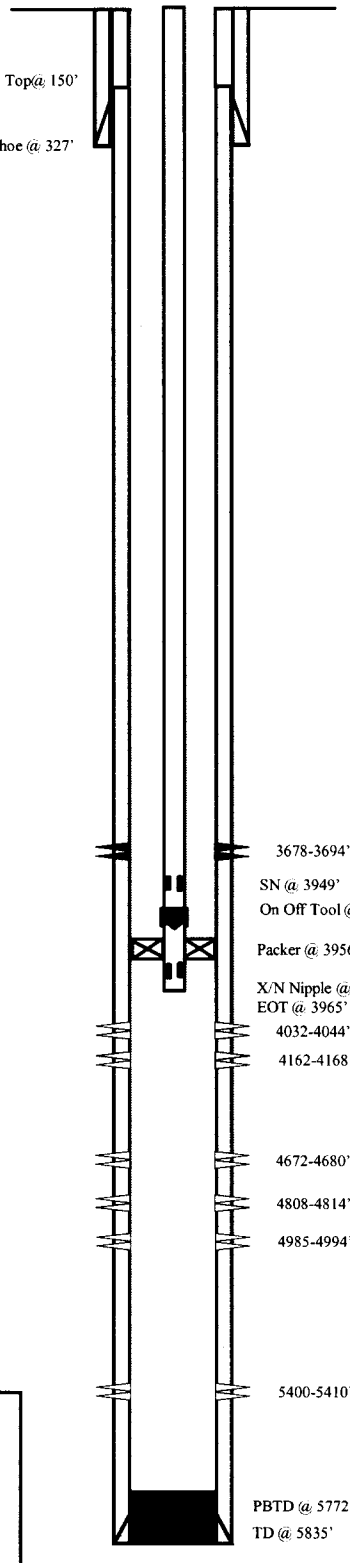

FRAC JOB

01/25/06	5400-5410'	**Frac CP1 sands as follows:** 14789# 20/40 sand in 255 bbls Lightning 17 frac fluid. Treated @ avg press of 1785 psi w/avg rate of 25.1 BPM. ISIP 1850 psi. Calc flush: 5398 gal. Actual flush: 4872 gal.
01/25/06	4985-4994'	**Frac A3 sands as follows:** 18508# 20/40 sand 284 bbls Lightning 17 frac fluid. Treated @ avg press of 1845 psi w/avg rate of 25.1 BPM. ISIP 1870 psi. Calc flush: 4983 gal. Actual flush: 4992 gal.
01/25/06	4808-4814'	**Frac B2 sands as follows:** 23613# 20/40 sand in 319 bbls Lightning 17 frac fluid. Treated @ avg press of 2375 psi w/avg rate of 25.1 BPM. ISIP 2600 psi. Calc flush: 4806 gal. Actual flush: 4284 gal.
01/25/06	4672-4680'	**Frac C sands as follows:** 61018# 20/40 sand in 480 bbls Lightning 17 frac fluid. Treated @ avg press of 2005 psi w/avg rate of 25 BPM. ISIP 2240 psi. Calc flush: 4670 gal. Actual flush: 4116 gal.
01/25/06	4032-4044'	**Frac PB8, GB6 sands as follows:** 29328# 20/40 sand in 330 bbls Lightning17 frac fluid. Treated @ avg press of 1813 psi w/avg rate of 25.1 BPM. ISIP 1835 psi. Calc flush: 4030 gal. Actual flush: 3486 gal.
01/25/06	3678-3694'	**Frac GG sands as follows:** 48534# 20/40 sand in 390 bbls Lightning17 frac fluid. Treated @ avg press of 1700 psi w/avg rate of 25.1 BPM. ISIP 1840 psi. Calc flush: 3676 gal. Actual flush: 3570 gal.
06-26-06		**Parted Rods:** Update rod and tubing details.
11-27-06		**Pump Change:** Updated rod and tubing detail.
9-12-07		**Pump change**. Updated rod & tubing details.
04/17/08		**Pump change**. Updated rod & tubing details.
12/11/09		**Tubing leak**. Updated rod and tubing details.
10/29/13	3678-3694'	**Cmt Squeeze** – 100 sxs Class G Cement
11/15/13		**Conversion MIT Finalized** – update tbg detail

PERFORATION RECORD

01/18/06	5400-5410'	4 JSPF	40 holes
01/25/06	4985-4994'	4 JSPF	36 holes
01/25/06	4808-4814'	4 JSPF	24 holes
01/25/06	4672-4680'	4 JSPF	32 holes
01/25/06	4162-4168'	4 JSPF	24 holes
01/25/06	4032-4044'	4 JSPF	48 holes
01/25/06	3678-3694'	4 JSPF	64 holes Squeezed

NEWFIELD

Jonah Federal 16-15-9-16

512' FSL & 535' FEL

SE/SE Section 15-T9S-R16E

Duchesne Co, Utah

API #43-013-32754; Lease #UTU-17985

LCN 11/21/13

ATTACHMENT E-15

43-013-51678

NEWFIELD

GMBU Y-14-9-16

Monument Butte - Duchesne County; Utah, USA

Surface Legal Location: NE/NE Section 22, T9S, R16E; 922' FNL & 944' FEL

Elevation: 5746' GL + 10' KB

API Number: 43-013-51678; Lease Number: UTU-74392

Paul Lembcke
PFM 1/21/14
Spud Date: 5/6/13
PoP Date: 6/10/2013

CASING DETAIL

Casing	Top	Bottom	Size	Wt.	Grade	Drift	Burst	Collapse	ID	gal/ft	Coupling	Hole
Surf	10'	339'	8-5/8"	24#	J-55	7.972"	2,950	1,370	8.097"	2.6749	STC	12.250
Prod	10'	6,206'	5-1/2"	15.5#	J-55	4.825"	4,810	4,040	4.950"	0.9997	LTC	7.875

TBG DETAIL

Top	Bottom	Coupling	Size	Wt.	Grade	Drift	Burst	Collapse	ID	Packer/Hanger
10'	6,125'	8EUE	2-7/8"	6.5#	J-55	2.347"	7,260	7,680	2.441"	Tubing Anchor Set @ 6,026'

ROD DETAIL

Component	Top	Bottom	Size	Grade	Length	Count
Polish Rod	0'	30'	1 1/2"	C(API)	30	1
Pony Rod	30'	32'	7/8"	C(API)	2	1
Pony Rod	32'	36'	7/8"	C(API)	4	1
Pony Rod	36'	42'	7/8"	C(API)	6	1
Pony Rod	42'	50'	7/8"	C(API)	8	1
4per Guided Rod	50'	1,875'	7/8"	Tenaris D78	1825	73
4per Guided Rod	1,875'	5,300'	3/4"	Tenaris D78	3425	137
8per Guided Rod	5,300'	6,050'	7/8"	Tenaris D78	750	30

Pump: Insert Pump: 2.5" Max ID x 1.75" Plunger RHAC @ 6050'.

Stage	Top	Bottom	SPF	EHD	Date
4	0'	0'	3	-	-
	0'	0'	3	-	-
	0'	0'	3	-	-
	0'	0'	3	-	-
	0'	0'	3	-	-
	0'	0'	3	-	-
	4,204'	4,210'	3	0.34	5/31/2013
3	0'	0'	3	-	-
	0'	0'	3	-	-
	0'	0'	3	-	-
	0'	0'	3	-	-
	4,744'	4,746'	3	0.34	5/31/2013
	4,839'	4,842'	3	0.34	5/31/2013
	4,844'	4,846'	3	0.34	5/31/2013
2	0'	0'	3	-	-
	0'	0'	3	-	-
	0'	0'	3	-	-
	5,043'	5,045'	3	0.34	5/31/2013
	5,109'	5,112'	3	0.34	5/31/2013
	5,227'	5,230'	3	0.34	5/31/2013
	5,238'	5,240'	3	0.34	5/31/2013
1	0'	0'	3	-	-
	0'	0'	3	-	-
	0'	0'	3	-	-
	0'	0'	3	-	-
	5,968'	5,970'	3	0.34	5/29/2013
	5,999'	6,000'	3	0.34	5/29/2013
	6,042'	6,046'	3	0.34	5/29/2013

Frac Summary

Stage	Formation	20/40 White	Pad	Flush	ISIP	15% HCl	Treating Fluid	Load to Recover	Max STP
4	GB6	47,686 lbs	4,145 gals	4,360 gals	1.108 psi/ft	0 gals	9,501 gals	18,006 gals	3,117 psi
3	D3 D1	67,789 lbs	2,600 gals	4,805 gals	0.827 psi/ft	504 gals	15,487 gals	23,396 gals	4,020 psi
2	A3 A-Half B2	104,572 lbs	4,696 gals	4,998 gals	0.838 psi/ft	504 gals	23,590 gals	33,788 gals	3,267 psi
1	CP5	86,195 lbs	5,418 gals	5,951 gals	0.909 psi/ft	756 gals	19,907 gals	32,032 gals	3,665 psi

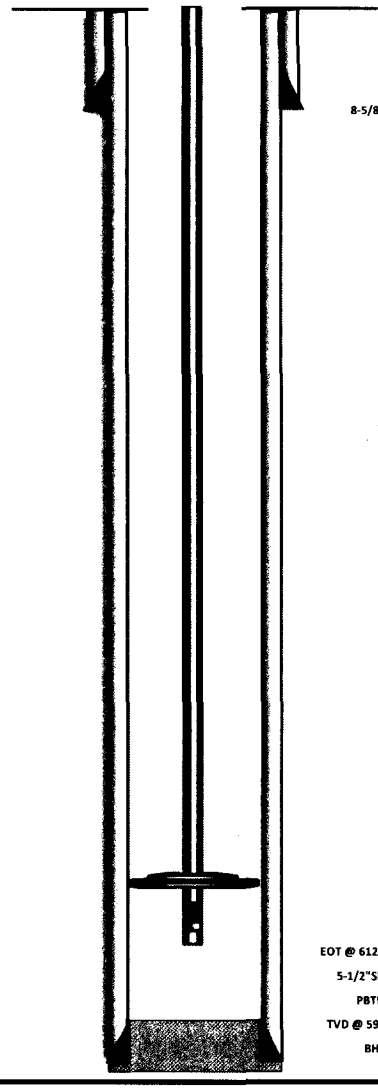

8-5/8"Shoe @ 339.06'

EOT @ 6124.8'; TA @ 6026.1'
5-1/2"Shoe @ 6206.34'
PBTD @ 6206.0'
TVD @ 5978'; MD @ 6,243'
BHST = 170°F

CEMENT

Surf	On 5/7/13 Baker Hughes cemented 8 5/8" casing w/ 160 sks Class "G" + 2% KCl + 0.25#/sk Cello Flake at 15.8 ppg w/ 1.17 yield and returned 4 bbls to the pit.
Prod	On 5/18/13 Baker pumped 265sks lead @ 11 ppg w/ 3.53 yield plus 475 sks tail @ 14.4 ppg w/ 1.24 yield. Returned 25 bbls to the pit. TOC @ 36'.

ATTACHMENT E-16

43-013-51674

NEWFIELD

GMBU V-15-9-16

Monument Butte - Duchesne County; Utah, USA

Surface Legal Location: NE/NE Section 22, T9S, R16E; 907' FNL & 959' FEL

Elevation: 5746' GL + 10' KB

API Number: 43-013-51674; Lease Number: UTU-74392

Paul Lembcke
PFM 1/22/2013
Spud Date: 5/3/13
PoP Date: 6/10/2013

CASING DETAIL

Casing	Top	Bottom	Size	Wt.	Grade	Drift	Burst	Collapse	ID	gal/ft	Coupling	Hole
Surf	10'	339'	8-5/8"	24#	J-55	7.972"	2,950	1,370	8.097"	2.6749	STC	12.250
Prod	10'	6,070'	5-1/2"	15.5#	J-55	4.825"	4,810	4,040	4.950"	0.9997	LTC	7.875

TBG DETAIL

Top	Bottom	Coupling	Size	Wt.	Grade	Drift	Burst	Collapse	ID	Packer/Hanger
10'	5,159'	8EUE	2-7/8"	6.5#	J-55	2.347"	7,260	7,680	2.441"	Tubing Anchor Set @ 5,061'

ROD DETAIL

Component	Top	Bottom	Size	Grade	Length	Count
Polish Rod	0'	30'	1 1/2"	C(API)	30	1
Pony Rod	30'	32'	7/8"	C(API)	2	1
Pony Rod	32'	38'	7/8"	C(API)	6	1
Pony Rod	38'	46'	7/8"	C(API)	8	1
4per Guided Rod	46'	1,621'	7/8"	Tenaris D78	1575	63
4per Guided Rod	1,621'	4,346'	3/4"	Tenaris D78	2725	109
8per Guided Rod	4,346'	5,096'	7/8"	Tenaris D78	750	30

Pump: Insert Pump: 2.5" Max ID x 1.75" Plunger RHAC @ 5096', #NF2417

Stage	Top	Bottom	SPF	EHD	Date
4	0'	0'	3	-	-
	0'	0'	3	-	-
	0'	0'	3	-	-
	0'	0'	3	-	-
	4,137'	4,138'	3	0.34	5/29/2013
	4,293'	4,295'	3	0.34	5/29/2013
	4,301'	4,304'	3	0.34	5/29/2013
3	0'	0'	3	-	-
	0'	0'	3	-	-
	0'	0'	3	-	-
	0'	0'	3	-	-
	0'	0'	3	-	-
	4,784'	4,786'	3	0.34	5/29/2013
	4,792'	4,796'	3	0.34	5/29/2013
2	0'	0'	3	-	-
	0'	0'	3	-	-
	0'	0'	3	-	-
	0'	0'	3	-	-
	4,918'	4,920'	3	0.34	5/29/2013
	4,928'	4,930'	3	0.34	5/29/2013
	4,938'	4,940'	3	0.34	5/29/2013
1	0'	0'	3	-	-
	0'	0'	3	-	-
	0'	0'	3	-	-
	0'	0'	3	-	-
	0'	0'	3	-	-
	0'	0'	3	-	-
	5,074'	5,080'	3	0.34	5/29/2013

Frac Summary

Formation:	PB8 GB6		
20/40 White:	43,695 lbs	**15% HCl:**	0 gals
Pad:	2,470 gals	**Treating Fluid:**	10,609 gals
Flush:	4,154 gals	**Load to Recover:**	17,233 gals
ISIP=	0.850 psi/ft	**Max STP:**	2,911 psi
Formation:	C-Sand		
20/40 White:	34,145 lbs	**15% HCl:**	504 gals
Pad:	2,701 gals	**Treating Fluid:**	8,481 gals
Flush:	4,788 gals	**Load to Recover:**	16,474 gals
ISIP=	0.878 psi/ft	**Max STP:**	3,263 psi
Formation:	B2		
20/40 White:	74,723 lbs	**15% HCl:**	588 gals
Pad:	3,595 gals	**Treating Fluid:**	19,404 gals
Flush:	4,931 gals	**Load to Recover:**	28,518 gals
ISIP=	0.840 psi/ft	**Max STP:**	3,678 psi
Formation:	A1		
20/40 White:	24,330 lbs	**15% HCl:**	756 gals
Pad:	4,893 gals	**Treating Fluid:**	6,623 gals
Flush:	1,768 gals	**Load to Recover:**	14,040 gals
ISIP=	0.826 psi/ft	**Max STP:**	3,625 psi

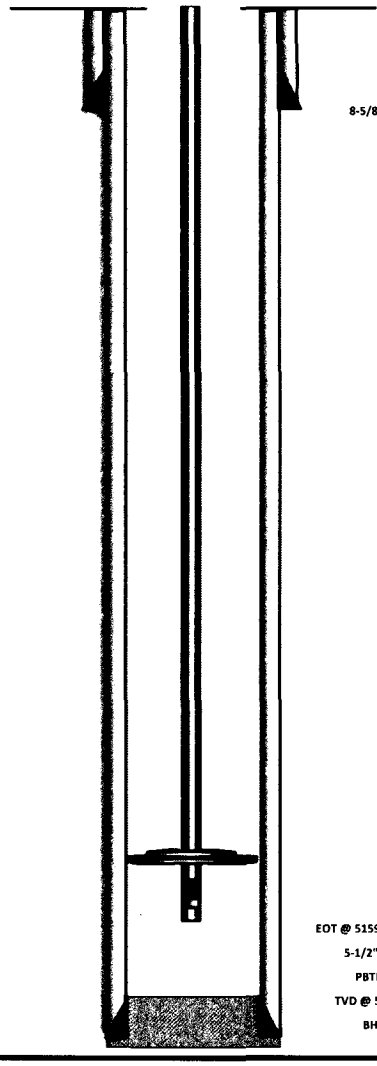

8-5/8"Shoe @ 339.07'

EOT @ 5159.05'; TA @ 5060.5'
5-1/2"Shoe @ 6070'
PBTD @ 6206.0'
TVD @ 5941'; MD 6080'
BHST = 170°F

CEMENT

Surf	On 5/7/13 Baker cemented 8 5/8" casing w/ 160 sks Class "G" + 2% KCl + 0.25#/sk Cello Flake at 15.8 ppg w/ 1.17 yield and returned 7 bbls to the pit.
Prod	On 5/12/13 Baker pumped 260 sks lead @ 11 ppg w/ 3.53 yield plus 475 sks tail @ 14.4 ppg w/ 1.24 yield. Returned 33 bbls to the pit. TOC @44'.

NEWFIELD

Schematic

ATTACHMENT E-17

43-013-51681

Well Name: GMBU G-23-9-16

Surface Legal Location	API/UWI	Well RC	Lease	State/Province	Field Name	County
NWNW 527 FNL 726 FWL Sec 23 T9S R16E Mer SLB	43013516810000	500334455	UTU15855	Utah	GMBU CTB5	Duchesne

Spud Date	Rig Release Date	On Production Date	Original KB Elevation (ft)	Ground Elevation (ft)	Total Depth All (TVD) (ftKB)	PBTD (All) (ftKB)
12/14/2013	12/31/2013	1/24/2014	5,728	5,718	Original Hole - 5,889.0	Original Hole - 6,006.3

Most Recent Job

Job Category	Primary Job Type	Secondary Job Type	Job Start Date	Job End Date
Initial Completion	Fracture Treatment	P&P	1/13/2014	1/21/2014

TD: 6,046.0 Slant - Original Hole, 4/15/2014 11:23:06 AM

MD (ftKB)	TVD (ftKB)	Incl (°)
0.0	0.1	1.7
2.0	2.1	
8.9	9.0	1.7
9.8	9.9	
12.1	12.2	1.7
14.1	14.2	
15.1	15.2	1.7
32.2	32.2	
54.8	54.9	1.7
278.5	278.5	
279.5	279.5	1.7
321.9	321.8	
323.5	323.5	1.7
328.1	328.0	
1,657.2	1,638.7	15.5
3,291.7	3,219.0	
3,302.8	3,229.7	16.3
4,045.9	3,948.2	
4,046.9	3,949.2	13.5
4,098.1	3,998.9	
4,099.1	3,999.9	13.7
4,104.0	4,004.7	
4,105.0	4,005.6	13.7
4,206.0	4,103.8	
4,210.0	4,107.7	13.5
4,332.0	4,226.4	
4,604.0	4,490.2	14.1
4,606.0	4,492.1	
4,648.0	4,532.8	13.7
4,651.9	4,536.7	
5,027.9	4,902.6	14.0
5,030.8	4,905.5	
5,065.9	4,939.5	14.2
5,067.9	4,941.4	
5,080.1	4,953.2	14.4
5,082.0	4,955.1	
5,094.5	4,967.1	14.6
5,095.5	4,968.1	
5,106.0	4,978.2	14.8
5,160.1	5,030.6	
5,160.4	5,030.9	14.5
6,006.2	5,850.1	
6,008.2	5,852.0	11.4
6,025.3	5,868.7	
6,025.9	5,869.4	11.4
6,045.9	5,889.0	

DLS (°...
0 —— 3

Vertical schematic (actual)

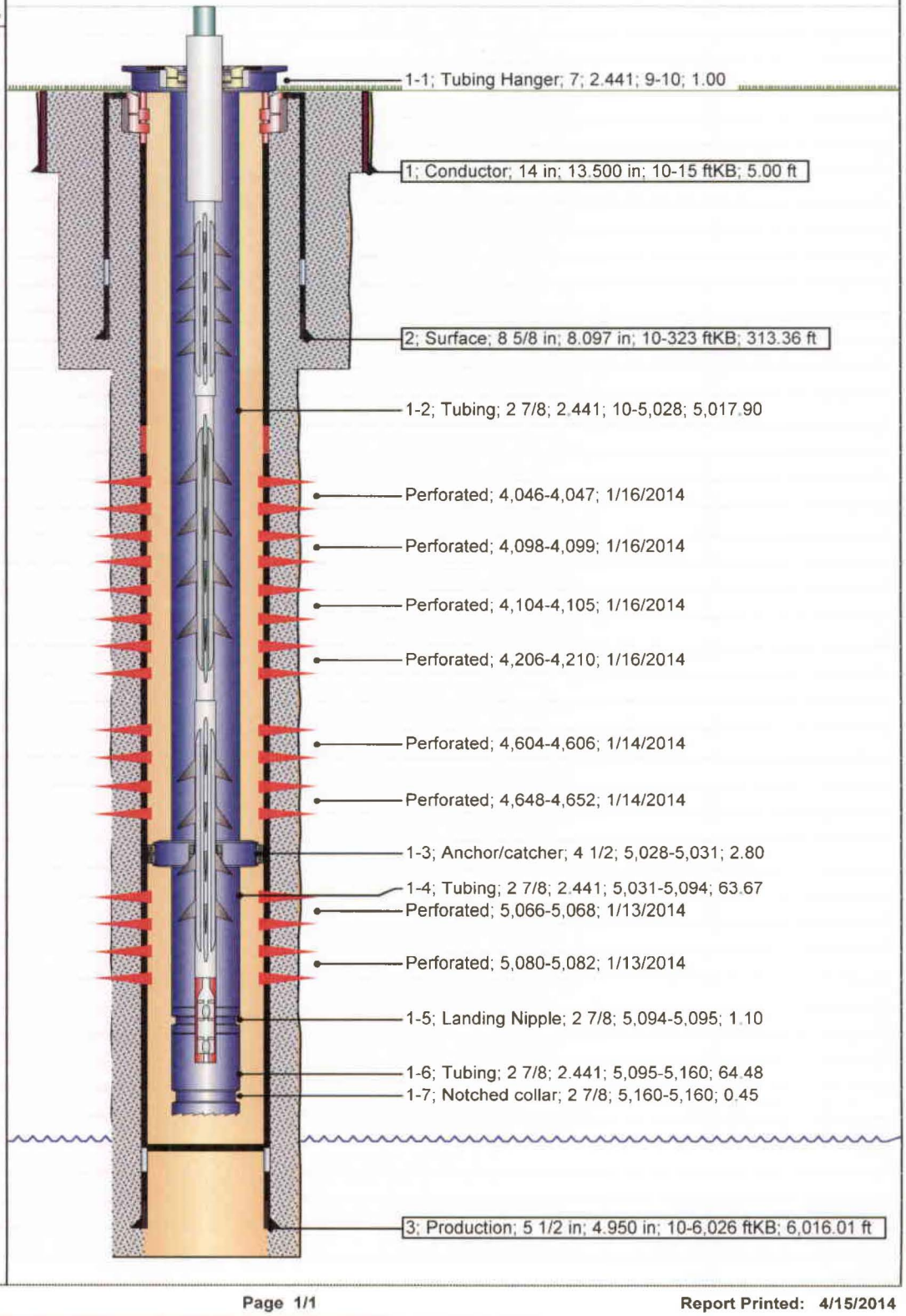

NEWFIELD

Schematic

43-013-51676

Well Name: GMBU X-14-9-16

Surface Legal Location	API/UWI	Well RC	Lease	State/Province	Field Name	County
NWNW 518 FNL 707 FWL Sec 23 T9S R16E Mer SLB	43013516760000	500346788	UTU15855	Utah	GMBU CTB5	Duchesne

Spud Date	Rig Release Date	On Production Date	Original KB Elevation (ft)	Ground Elevation (ft)	Total Depth All (TVD) (ftKB)	PBTD (All) (ftKB)
12/13/2013	12/28/2013	1/24/2014	5,728	5,718	Original Hole - 5,901.5	Original Hole - 5,959.6

Most Recent Job

Job Category	Primary Job Type	Secondary Job Type	Job Start Date	Job End Date
Initial Completion	Fracture Treatment	P&P	1/13/2014	1/24/2014

TD: 5,994.0

Slant - Original Hole, 4/7/2014 11:33:43 AM

MD (ftKB)	TVD (ftKB)	Incl (°)
2.0	2.0	1.0
9.8	9.9	1.0
13.8	13.8	1.0
32.2	32.2	1.0
38.1	38.1	1.0
51.8	51.9	1.0
277.9	277.9	1.0
322.8	322.8	1.0
330.1	330.0	1.0
3,296.9	3,250.8	12.4
4,055.1	3,994.9	10.6
4,586.0	4,516.0	11.2
4,602.0	4,531.8	11.1
4,606.0	4,535.7	11.0
4,740.2	4,667.6	10.3
4,752.0	4,679.2	10.3
4,757.9	4,685.0	10.3
4,890.1	4,815.3	9.5
4,898.0	4,823.1	9.6
4,926.8	4,851.5	10.0
4,960.0	4,884.1	10.3
5,067.9	4,990.4	10.2
5,074.1	4,996.5	10.2
5,084.0	5,006.2	10.3
5,504.9	5,420.4	11.6
5,551.8	5,466.3	11.9
5,626.3	5,539.3	11.4
5,675.9	5,587.9	10.7
5,691.6	5,603.4	10.4
5,701.1	5,612.7	10.2
5,758.2	5,668.9	10.1
5,961.3	5,869.2	8.7
5,983.9	5,891.6	8.7

DLS (°... 0 — 3

Vertical schematic (actual)

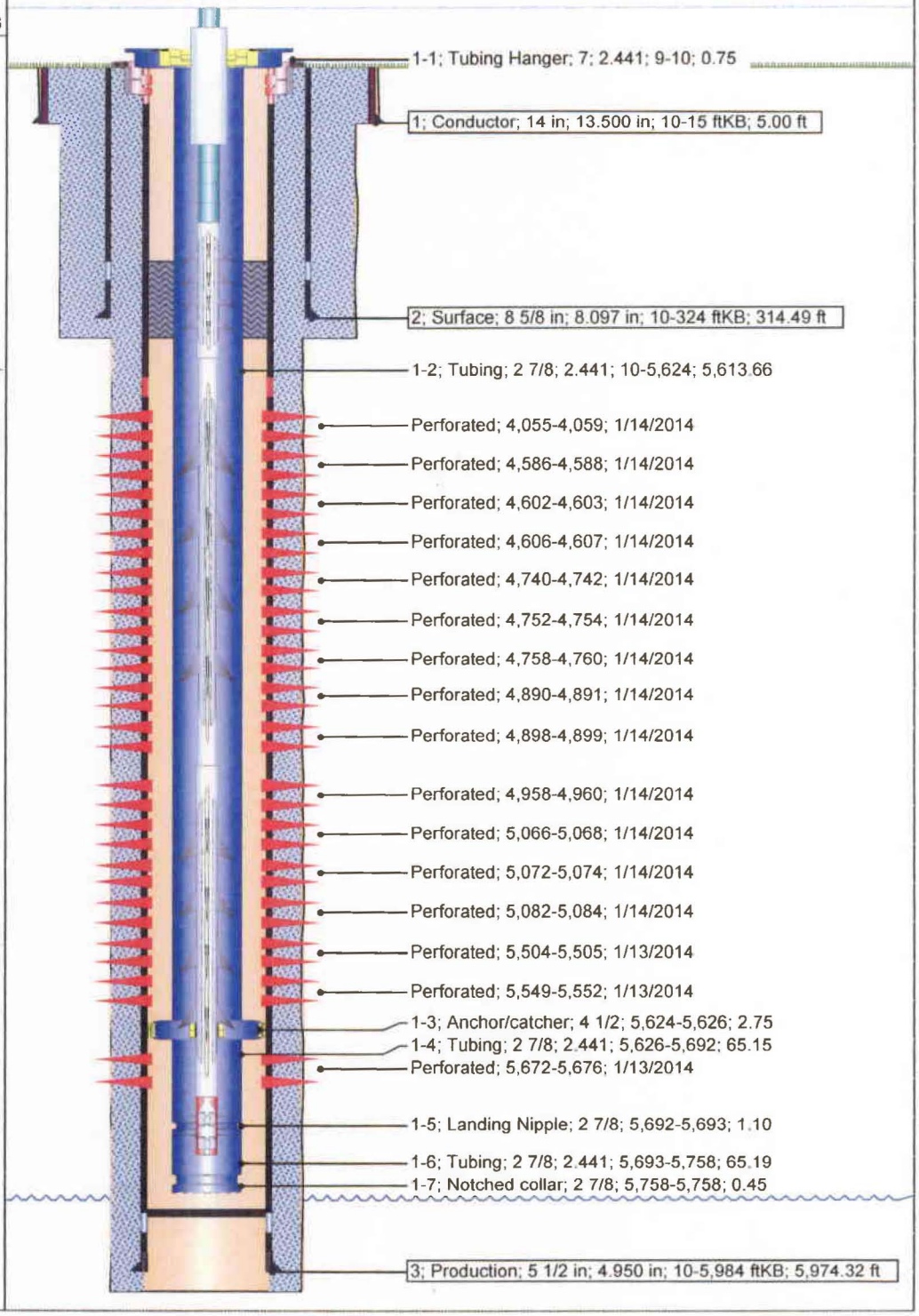

Multi-Chem Analytical Laboratory
1553 East Highway 40
Vernal, UT 84078

Units of Measurement: **Standard**

ATTACHMENT F
1 of 5

multi-chem®
A HALLIBURTON SERVICE

Water Analysis Report

Production Company: **NEWFIELD PRODUCTION**
Well Name: **FEDERAL 8-22-9-16**
Sample Point:
Sample Date: **1/24/2014**
Sample ID: **WA-264551**

Sales Rep: **Pete Prodromides**
Lab Tech: **Gary Winegar**

Scaling potential predicted using ScaleSoftPitzer from Brine Chemistry Consortium (Rice University)

Sample Specifics	
Test Date:	1/24/2014
System Temperature 1 (°F):	120
System Pressure 1 (psig):	60
System Temperature 2 (°F):	210
System Pressure 2 (psig):	60
Calculated Density (g/ml):	1.014
pH:	9.50
Calculated TDS (mg/L):	25519.12
CO2 in Gas (%):	
Dissolved CO_2 (mg/L)):	0.00
H_2S in Gas (%):	
H2S in Water (mg/L):	20.00

Analysis @ Properties in Sample Specifics			
Cations	*mg/L*	*Anions*	*mg/L*
Sodium (Na):	7944.00	Chloride (Cl):	16000.00
Potassium (K):	40.00	Sulfate (SO_4):	23.00
Magnesium (Mg):	7.80	Bicarbonate (HCO_3):	1464.00
Calcium (Ca):	10.40	Carbonate (CO_3):	
Strontium (Sr):	8.50	Acetic Acid (CH_3COO)	
Barium (Ba):	14.80	Propionic Acid (C_2H_5COO)	
Iron (Fe):	6.00	Butanoic Acid (C_3H_7COO)	
Zinc (Zn):	0.07	Isobutyric Acid ($(CH_3)_2CHCOO$)	
Lead (Pb):	0.00	Fluoride (F):	
Ammonia NH_3:		Bromine (Br):	
Manganese (Mn):	0.55	Silica (SiO_2):	

Notes:
Al=.01 **B=8.3** **Li=1.7**

(PTB = Pounds per Thousand Barrels)

		Calcium Carbonate		Barium Sulfate		Iron Sulfide		Iron Carbonate		Gypsum CaSO4·2H2O		Celestite SrSO4		Halite NaCl		Zinc Sulfide	
Temp (°F)	PSI	SI	PTB	SI	PTB	SI	PTB	SI	PTB	SI	PTB	SI	PTB	SI	PTB	SI	PTB
210.00	60.00	1.74	8.93	0.20	2.48	4.61	3.31	3.37	4.36	0.00	0.00	0.00	0.00	0.00	0.00	9.48	0.04
200.00	60.00	1.71	8.92	0.22	2.68	4.62	3.31	3.34	4.36	0.00	0.00	0.00	0.00	0.00	0.00	9.59	0.04
190.00	60.00	1.67	8.90	0.24	2.91	4.64	3.31	3.31	4.36	0.00	0.00	0.00	0.00	0.00	0.00	9.70	0.04
180.00	60.00	1.64	8.89	0.27	3.17	4.65	3.31	3.27	4.36	0.00	0.00	0.00	0.00	0.00	0.00	9.81	0.04
170.00	60.00	1.60	8.87	0.30	3.45	4.67	3.31	3.24	4.36	0.00	0.00	0.00	0.00	0.00	0.00	9.94	0.04
160.00	60.00	1.57	8.85	0.34	3.77	4.70	3.31	3.20	4.36	0.00	0.00	0.00	0.00	0.00	0.00	10.07	0.04
150.00	60.00	1.54	8.83	0.38	4.11	4.73	3.31	3.16	4.36	0.00	0.00	0.00	0.00	0.00	0.00	10.20	0.04
140.00	60.00	1.51	8.82	0.42	4.48	4.77	3.31	3.11	4.36	0.00	0.00	0.00	0.00	0.00	0.00	10.34	0.04
130.00	60.00	1.48	8.79	0.47	4.86	4.81	3.31	3.07	4.36	0.00	0.00	0.00	0.00	0.00	0.00	10.49	0.04
120.00	60.00	1.46	8.78	0.53	5.25	4.86	3.31	3.02	4.36	0.00	0.00	0.00	0.00	0.00	0.00	10.65	0.04

Multi-Chem Analytical Laboratory
1553 East Highway 40
Vernal, UT 84078

ATTACHMENT F
2 of 5

multi-chem
A HALLIBURTON SERVICE

Water Analysis Report

		Hemihydrate CaSO4~0.5H2O		Anhydrate CaSO4		Calcium Fluoride		Zinc Carbonate		Lead Sulfide		Mg Silicate		Ca Mg Silicate		Fe Silicate	
Temp (°F)	PSI	SI	PTB	SI	PTB	SI	PTB	SI	PTB	SI	PTB	SI	PTB	SI	PTB	SI	PTB
210.00	60.00	0.00	0.00	0.00	0.00	0.00	0.00	1.50	0.05	0.00	0.00	0.00	0.00	0.00	0.00	0.00	0.00
200.00	60.00	0.00	0.00	0.00	0.00	0.00	0.00	1.44	0.05	0.00	0.00	0.00	0.00	0.00	0.00	0.00	0.00
190.00	60.00	0.00	0.00	0.00	0.00	0.00	0.00	1.37	0.05	0.00	0.00	0.00	0.00	0.00	0.00	0.00	0.00
180.00	60.00	0.00	0.00	0.00	0.00	0.00	0.00	1.30	0.05	0.00	0.00	0.00	0.00	0.00	0.00	0.00	0.00
170.00	60.00	0.00	0.00	0.00	0.00	0.00	0.00	1.23	0.05	0.00	0.00	0.00	0.00	0.00	0.00	0.00	0.00
160.00	60.00	0.00	0.00	0.00	0.00	0.00	0.00	1.14	0.04	0.00	0.00	0.00	0.00	0.00	0.00	0.00	0.00
150.00	60.00	0.00	0.00	0.00	0.00	0.00	0.00	1.05	0.04	0.00	0.00	0.00	0.00	0.00	0.00	0.00	0.00
140.00	60.00	0.00	0.00	0.00	0.00	0.00	0.00	0.96	0.04	0.00	0.00	0.00	0.00	0.00	0.00	0.00	0.00
130.00	60.00	0.00	0.00	0.00	0.00	0.00	0.00	0.85	0.04	0.00	0.00	0.00	0.00	0.00	0.00	0.00	0.00
120.00	60.00	0.00	0.00	0.00	0.00	0.00	0.00	0.74	0.04	0.00	0.00	0.00	0.00	0.00	0.00	0.00	0.00

These scales have positive scaling potential under initial temperature and pressure: Calcium Carbonate Barium Sulfate Iron Sulfide Iron Carbonate Zinc Sulfide Zinc Carbonate

These scales have positive scaling potential under final temperature and pressure: Calcium Carbonate Barium Sulfate Iron Sulfide Iron Carbonate Zinc Sulfide Zinc Carbonate

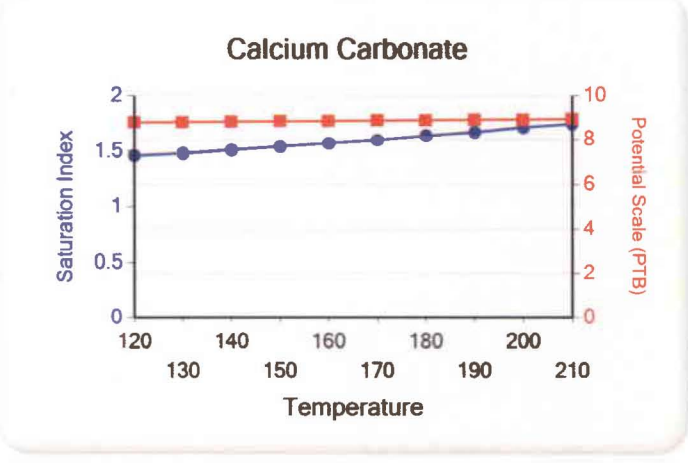

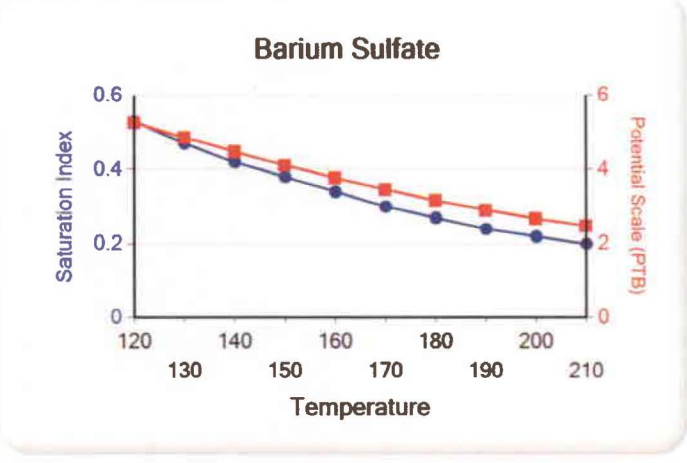

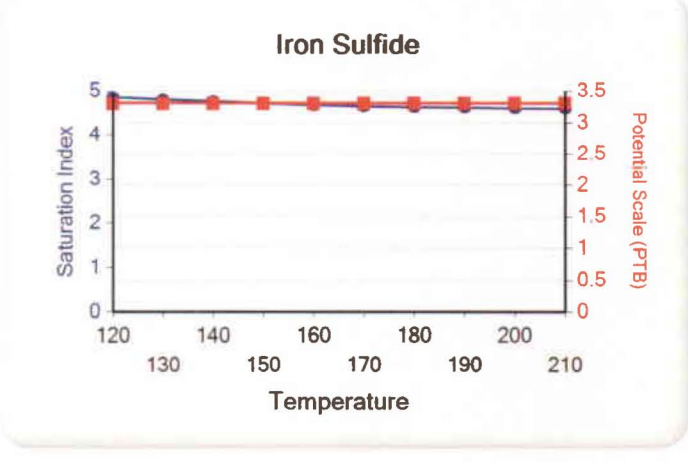

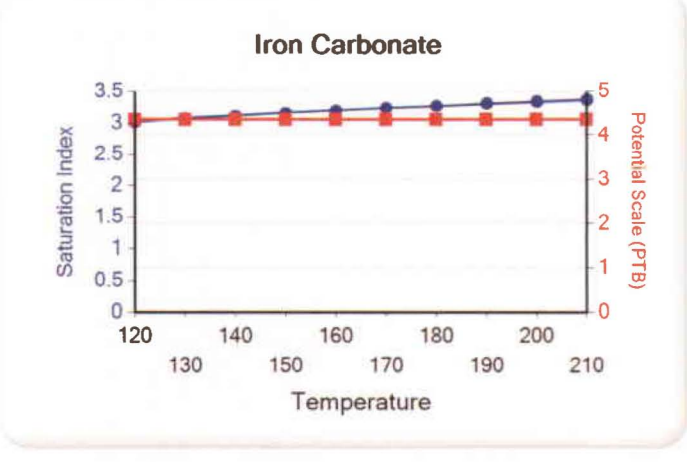

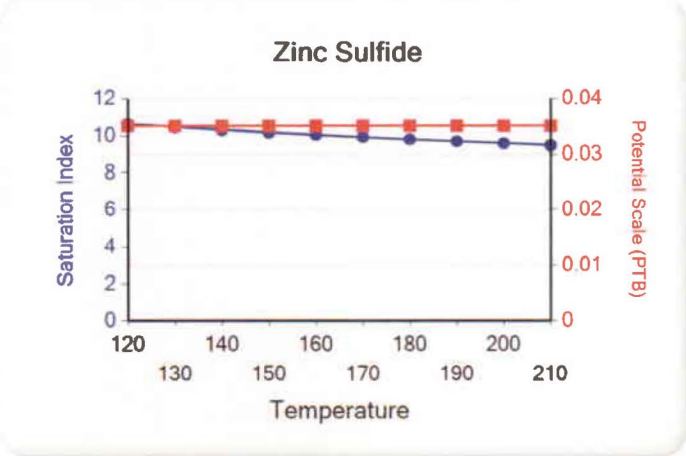
Zinc Sulfide
Saturation Index
Potential Scale (PTB)
Temperature
12
10
8
6
4
2
0
0.04
0.03
0.02
0.01
0
120
130
140
150
160
170
180
190
200
210

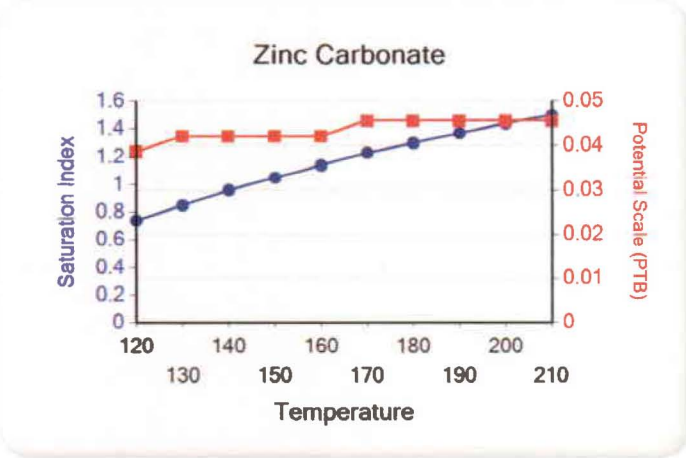
Zinc Carbonate
Saturation Index
Potential Scale (PTB)
Temperature
1.6
1.4
1.2
1
0.8
0.6
0.4
0.2
0
0.05
0.04
0.03
0.02
0.01
0
120
130
140
150
160
170
180
190
200
210

ATTACHMENT F
4 of 5

Multi-Chem Analytical Laboratory
1553 East Highway 40
Vernal, UT 84078

multi-chem
A HALLIBURTON SERVICE

Units of Measurement: **Standard**

Water Analysis Report

Production Company: **NEWFIELD PRODUCTION**
Well Name: **WELLS DRAW INJ FACILITY**
Sample Point: **Commingled After Filter**
Sample Date: **11/18/2013**
Sample ID: **WA-259493**

Sales Rep: **Jacob Bird**
Lab Tech: **Gary Winegar**

Scaling potential predicted using ScaleSoftPitzer from Brine Chemistry Consortium (Rice University)

Sample Specifics	
Test Date:	11/26/2013
System Temperature 1 (°F):	120
System Pressure 1 (psig):	2000
System Temperature 2 (°F):	210
System Pressure 2 (psig):	2000
Calculated Density (g/ml):	0.999
pH:	6.50
Calculated TDS (mg/L):	2413.76
CO2 in Gas (%):	
Dissolved CO_2 (mg/L):	24.00
H_2S in Gas (%):	
H2S in Water (mg/L):	0.00

Analysis @ Properties in Sample Specifics			
Cations	*mg/L*	*Anions*	*mg/L*
Sodium (Na):	141.00	Chloride (Cl):	1000.00
Potassium (K):	39.00	Sulfate (SO_4):	41.00
Magnesium (Mg):	24.00	Bicarbonate (HCO_3):	1122.00
Calcium (Ca):	41.00	Carbonate (CO_3):	
Strontium (Sr):	0.70	Acetic Acid (CH_3COO)	
Barium (Ba):	0.00	Propionic Acid (C_2H_5COO)	
Iron (Fe):	0.11	Butanoic Acid (C_3H_7COO)	
Zinc (Zn):	0.03	Isobutyric Acid ($(CH_3)_2CHCOO$)	
Lead (Pb):	0.00	Fluoride (F):	
Ammonia NH_3:		Bromine (Br):	
Manganese (Mn):	0.00	Silica (SiO_2):	4.92

Notes:
B=.4 Al=.18 Li=0

(PTB = Pounds per Thousand Barrels)

		Calcium Carbonate		Barium Sulfate		Iron Sulfide		Iron Carbonate		Gypsum $CaSO_4 \cdot 2H_2O$		Celestite $SrSO_4$		Halite NaCl		Zinc Sulfide	
Temp (°F)	PSI	SI	PTB	SI	PTB	SI	PTB	SI	PTB	SI	PTB	SI	PTB	SI	PTB	SI	PTB
210.00	2000.00	0.31	15.83	0.00	0.00	0.00	0.00	0.00	0.00	0.00	0.00	0.00	0.00	0.00	0.00	0.00	0.00
200.00	2000.00	0.22	12.10	0.00	0.00	0.00	0.00	0.00	0.00	0.00	0.00	0.00	0.00	0.00	0.00	0.00	0.00
190.00	2000.00	0.14	7.94	0.00	0.00	0.00	0.00	0.00	0.00	0.00	0.00	0.00	0.00	0.00	0.00	0.00	0.00
180.00	2000.00	0.06	3.37	0.00	0.00	0.00	0.00	0.00	0.00	0.00	0.00	0.00	0.00	0.00	0.00	0.00	0.00
170.00	2000.00	0.00	0.00	0.00	0.00	0.00	0.00	0.00	0.00	0.00	0.00	0.00	0.00	0.00	0.00	0.00	0.00
160.00	2000.00	0.00	0.00	0.00	0.00	0.00	0.00	0.00	0.00	0.00	0.00	0.00	0.00	0.00	0.00	0.00	0.00
150.00	2000.00	0.00	0.00	0.00	0.00	0.00	0.00	0.00	0.00	0.00	0.00	0.00	0.00	0.00	0.00	0.00	0.00
140.00	2000.00	0.00	0.00	0.00	0.00	0.00	0.00	0.00	0.00	0.00	0.00	0.00	0.00	0.00	0.00	0.00	0.00
130.00	2000.00	0.00	0.00	0.00	0.00	0.00	0.00	0.00	0.00	0.00	0.00	0.00	0.00	0.00	0.00	0.00	0.00
120.00	2000.00	0.00	0.00	0.00	0.00	0.00	0.00	0.00	0.00	0.00	0.00	0.00	0.00	0.00	0.00	0.00	0.00

ATTACHMENT F

5 of 5

Multi-Chem Analytical Laboratory
1553 East Highway 40
Vernal, UT 84078

multi-chem®
A HALLIBURTON SERVICE

Water Analysis Report

		Hemihydrate CaSO4~0.5H2O		Anhydrate CaSO4		Calcium Fluoride		Zinc Carbonate		Lead Sulfide		Mg Silicate		Ca Mg Silicate		Fe Silicate	
Temp (°F)	PSI	SI	PTB	SI	PTB	SI	PTB	SI	PTB	SI	PTB	SI	PTB	SI	PTB	SI	PTB
210.00	2000.00	0.00	0.00	0.00	0.00	0.00	0.00	0.00	0.00	0.00	0.00	0.00	0.00	0.00	0.00	0.00	0.00
200.00	2000.00	0.00	0.00	0.00	0.00	0.00	0.00	0.00	0.00	0.00	0.00	0.00	0.00	0.00	0.00	0.00	0.00
190.00	2000.00	0.00	0.00	0.00	0.00	0.00	0.00	0.00	0.00	0.00	0.00	0.00	0.00	0.00	0.00	0.00	0.00
180.00	2000.00	0.00	0.00	0.00	0.00	0.00	0.00	0.00	0.00	0.00	0.00	0.00	0.00	0.00	0.00	0.00	0.00
170.00	2000.00	0.00	0.00	0.00	0.00	0.00	0.00	0.00	0.00	0.00	0.00	0.00	0.00	0.00	0.00	0.00	0.00
160.00	2000.00	0.00	0.00	0.00	0.00	0.00	0.00	0.00	0.00	0.00	0.00	0.00	0.00	0.00	0.00	0.00	0.00
150.00	2000.00	0.00	0.00	0.00	0.00	0.00	0.00	0.00	0.00	0.00	0.00	0.00	0.00	0.00	0.00	0.00	0.00
140.00	2000.00	0.00	0.00	0.00	0.00	0.00	0.00	0.00	0.00	0.00	0.00	0.00	0.00	0.00	0.00	0.00	0.00
130.00	2000.00	0.00	0.00	0.00	0.00	0.00	0.00	0.00	0.00	0.00	0.00	0.00	0.00	0.00	0.00	0.00	0.00
120.00	2000.00	0.00	0.00	0.00	0.00	0.00	0.00	0.00	0.00	0.00	0.00	0.00	0.00	0.00	0.00	0.00	0.00

These scales have positive scaling potential under initial temperature and pressure: Calcium Carbonate

These scales have positive scaling potential under final temperature and pressure:

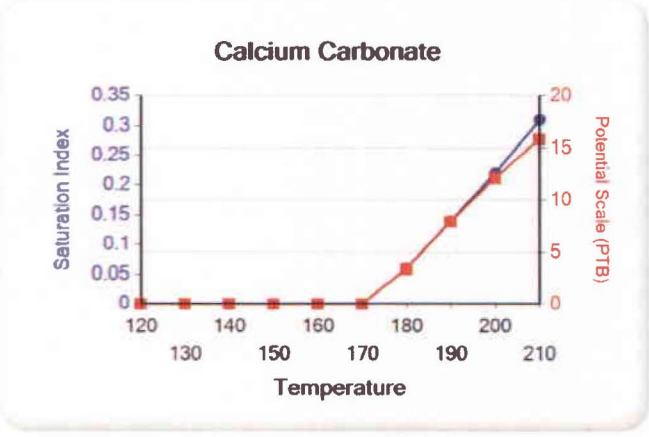

Attachment "G"

Federal #8-22-9-16
Proposed Maximum Injection Pressure

Frac Interval (feet) Top	Bottom	Avg. Depth (feet)	ISIP (psi)	Calculated Frac Gradient (psi/ft)	Pmax
5530	5550	5540	1960	0.79	1924
4914	4926	4920	2190	0.88	2158
4742	4751	4747	1950	0.84	1919 ←
				Minimum	1919

Calculation of Maximum Surface Injection Pressure
Pmax = (Frac Grad -(0.433*1.015)) x Depth of Top Perf
where pressure gradient for the fresh water is .433 psi/ft and
specific gravity of the injected water is 1.015.

Frac Gradient = (ISIP +(0.433*Top Perf.))/Top Perf.

Please note: These are existing perforations; additional perforations may be added during the actual conversion procedure.

NEWFIELD

ATTACHMENT G-1
1 of 8

DAILY COMPLETION REPORT

WELL NAME: Federal 8-22-9-16 **Report Date:** 6-Dec-06 **Day:** 1

Operation: Completion **Rig:** Rigless

WELL STATUS

Surf Csg: 8 5/8' @ 322' Prod Csg: 5 1/2" @ 5851' Csg PBTD: 5789' WL

Tbg: Size: Wt: Grd: Pkr/EOT @: BP/Sand PBTD:

PERFORATION RECORD

Zone	Perfs	SPF/#shots	Zone	Perfs	SPF/#shots
CP4 sds	5530-5550'	4/80			

CHRONOLOGICAL OPERATIONS

Date Work Performed: 5-Dec-06 **SITP:** **SICP:** 0

Install 5M frac head. NU 6" 5M Cameron BOP. RU H/O truck & pressure test casing, blind rams, frac head & casing valves to 4500 psi. RU Perforators LLC WLT w/ mast & run CBL under pressure. WLTD @ 5789' & cement top @ 60' Perforate stage #1, CP4 sds @ 5530- 50' w/ 3 1/8" Slick guns (19 gram, .49" HE, 120°, 21.92" pen, EXP-3319-331 Titan) w/ 4 spf for total of 80 shots. 139 BWTR. SIFN.

FLUID RECOVERY (BBLS)

Starting fluid load to be recovered: 139 Starting oil rec to date:

Fluid lost/recovered today: 0 Oil lost/recovered today:

Ending fluid to be recovered: 139 Cum oil recovered:

IFL: FFL: FTP: Choke: Final Fluid Rate: Final oil cut:

STIMULATION DETAIL

Base Fluid used: Job Type:

Company:

Procedure or Equipment detail:

Max TP: Max Rate: Total fluid pmpd:

Avg TP: Avg Rate: Total Prop pmpd:

ISIP: 5 min: 10 min: 15 min:

Completion Supervisor: Orson Barney

COSTS

DAILY COST: $0

TOTAL WELL COST:

NEWFIELD

ATTACHMENT G-1
2 of 8

DAILY COMPLETION REPORT

WELL NAME: Federal 8-22-9-16 **Report Date:** 9-Dec-06 **Day:** 2a

Operation: Completion **Rig:** Rigless

WELL STATUS

Surf Csg: 8 5/8' @ 322' **Prod Csg:** 5 1/2" @ 5851' **Csg PBTD:** 5789' WL

Tbg: **Size:** **Wt:** **Grd:** **Pkr/EOT @:** **BP/Sand PBTD:**

PERFORATION RECORD

Zone	Perfs	SPF/#shots	Zone	Perfs	SPF/#shots
CP4 sds	5530-5550'	4/80			

CHRONOLOGICAL OPERATIONS

Date Work Performed: 8-Dec-06 **SITP:** **SICP:** 0

Day2a.
RU BJ Services "Ram Head" frac flange. RU BJ & frac CP4 sds, stage #1 down casing w/ 30,245#'s of 20/40 sand ir 381 bbls of Lightning 17 frac fluid. Open well w/ 0 psi on casing. Perfs broke down @ 2142 psi. Treated @ ave pressure of 2020 w/ ave rate of 25 bpm w/ 6.5 ppg of sand. Spot 12 bbls of 15% HCL acid in flush for next stage. ISIF was 1960. 520 bbls EWTR. Leave pressure on well. **See day2b.**

FLUID RECOVERY (BBLS)

Starting fluid load to be recovered: 139 **Starting oil rec to date:**

Fluid lost/recovered today: 381 **Oil lost/recovered today:**

Ending fluid to be recovered: 520 **Cum oil recovered:**

IFL: **FFL:** **FTP:** **Choke:** **Final Fluid Rate:** **Final oil cut:**

STIMULATION DETAIL

Base Fluid used: Lightning 17 **Job Type:** Sand frac

Company: BJ Services

Procedure or Equipment detail: CP4 sds down casing

546 gals to cross linker

2436 gals of pad

2319 gals w/ 1-4 ppg of 20/40 sand

5199 gals w/ 4-6.5 ppg of 20/40 sand

504 gals of 15% HCL acid

Flush w/ 4998 gals of slick water

Flush called @ blender to include 2 bbls pump/line volume

Max TP: 2176 **Max Rate:** 25 **Total fluid pmpd:** 381 bbls

Avg TP: 2020 **Avg Rate:** 25 **Total Prop pmpd:** 30,245#'s

ISIP: 1960 **5 min:** **10 min:** **FG:** .79

Completion Supervisor: Ron Shuck

COSTS

DAILY COST: $0

TOTAL WELL COST: $0

NEWFIELD

ATTACHMENT G-1
3 of 8

DAILY COMPLETION REPORT

WELL NAME: Federal 8-22-9-16 **Report Date:** 9-Dec-06 **Day:** 2b

Operation: Completion **Rig:** Rigless

WELL STATUS

Surf Csg: 8 5/8' @ 322' **Prod Csg:** 5 1/2" @ 5851' **Csg PBTD:** 5789' WL

Tbg: **Size:** **Wt:** **Grd:** **Pkr/EOT @:** **BP/Sand PBTD:** 5030'

PERFORATION RECORD

Zone	Perfs	SPF/#shots	Zone	Perfs	SPF/#shots
A1 sds	4914-4926'	4/48			
CP4 sds	5530-5550'	4/80			

CHRONOLOGICAL OPERATIONS

Date Work Performed: 8-Dec-06 **SITP:** **SICP:** 1500

Day2b.
RU Lone Wolf WLT, crane & lubricator. RIH w/ Weatherford 5-1/2" (6K) composite flow through frac plug & 12' per gun. Set plug @ 5030'. Perforate A1 sds @ 4914-26' w/ 3-1/8" Slick Guns (23 gram, .43"HE, 90°) w/ 4 spf for total o 48 shots. RU BJ stage #2 w/ 70,951#'s of 20/40 sand in 533 bbls of Lightning 17 frac fluid. Open well w/ 1500 psi or casing. Perfs broke down @ 2763 psi. Treated @ ave pressure of 1762 w/ ave rate of 25 bpm w/ 8 ppg of sand. Spo 12 bbls of 15% HCL acid in flush for next stage. ISIP was 2190. 1053 bbls EWTR. Leave pressure on well. **See day2c.**

FLUID RECOVERY (BBLS)

Starting fluid load to be recovered: 520 **Starting oil rec to date:**

Fluid lost/recovered today: 533 **Oil lost/recovered today:**

Ending fluid to be recovered: 1053 **Cum oil recovered:**

IFL: **FFL:** **FTP:** **Choke:** **Final Fluid Rate:** **Final oil cut:**

STIMULATION DETAIL

Base Fluid used: Lightning 17 **Job Type:** Sand frac

Company: BJ Services

Procedure or Equipment detail: A1 sds down casing

5418 gals of pad
3625 gals w/ 1-5 ppg of 20/40 sand
7250 gals w/ 5-8 ppg of 20/40 sand
1137 gals w/ 8 ppg of 20/40 sand
504 gals of 15% HCL acid
Flush w/ 4452 gals of slick water
Flush called @ blender to include 2 bbls pump/line volume

Max TP: 2763 **Max Rate:** 25 **Total fluid pmpd:** 533 bbls

Avg TP: 1762 **Avg Rate:** 25 **Total Prop pmpd:** 70,951#'s

ISIP: 2190 **5 min:** **10 min:** **FG:** .88

Completion Supervisor: Ron Shuck

COSTS

DAILY COST: $0

TOTAL WELL COST: $0

NEWFIELD

ATTACHMENT G-1
4 of 8

DAILY COMPLETION REPORT

WELL NAME: Federal 8-22-9-16 **Report Date:** 9-Dec-06 **Day:** 2c

Operation: Completion **Rig:** Rigless

WELL STATUS

Surf Csg: 8 5/8' @ 322' **Prod Csg:** 5 1/2" @ 5851' **Csg PBTD:** 5789' WL

Tbg: **Size:** **Wt:** **Grd:** **Pkr/EOT @:** **BP/Sand PBTD:** 4855'

Plug 5030'

PERFORATION RECORD

Zone	Perfs	SPF/#shots	Zone	Perfs	SPF/#shots
B2 sds	4742-4751'	4/36			
A1 sds	4914-4926'	4/48			
CP4 sds	5530-5550'	4/80			

CHRONOLOGICAL OPERATIONS

Date Work Performed: 8-Dec-06 **SITP:** **SICP:** 1442

Day2c.
RU WLT. RIH w/ frac plug & 9' perf gun. Set plug @ 4855'. Perforate B2 sds @ 4742-51' w/ 4 spf for total of 36 shots. RU BJ stage #3 w/ 29,729#'s of 20/40 sand in 414 bbls of Lightning 17 frac fluid. Open well w/ 1442 psi on casing. Perfs broke down @ 4200 psi. Treated @ ave pressure of 2490 w/ ave rate of 25 bpm w/ 6.5 ppg of sand. Spot 12 bbls of 15% HCL acid in flush for next stage. ISIP was 1950. 1467 bbls EWTR. Leave pressure on well. **See day2d.**

FLUID RECOVERY (BBLS)

Starting fluid load to be recovered: 1053 **Starting oil rec to date:**

Fluid lost/recovered today: 414 **Oil lost/recovered today:**

Ending fluid to be recovered: 1467 **Cum oil recovered:**

IFL: **FFL:** **FTP:** **Choke:** **Final Fluid Rate:** **Final oil cut:**

STIMULATION DETAIL

Base Fluid used: Lightning 17 **Job Type:** Sand frac

Company: BJ Services

Procedure or Equipment detail: B2 sds down casing

2100 gals to cross linker

2982 gals of pad

2319 gals w/ 1-4 ppg of 20/40 sand

5241 gals w/ 4-6.5 ppg of 20/40 sand

504 gals of 15% HCL acid

Flush w/ 4242 gals of slick water

Flush called @ blender to include 2 bbls pump/line volume

Max TP: 4200 **Max Rate:** 25 **Total fluid pmpd:** 414 bbls

Avg TP: 2490 **Avg Rate:** 25 **Total Prop pmpd:** 29,729#'s

ISIP: 1950 **5 min:** **10 min:** **FG:** .84

Completion Supervisor: Ron Shuck

COSTS

DAILY COST: $0

TOTAL WELL COST: $0

NEWFIELD

ATTACHMENT G-1
5 of 8

DAILY COMPLETION REPORT

WELL NAME: Federal 8-22-9-16 **Report Date:** 9-Dec-06 **Day:** 2d

Operation: Completion **Rig:** Rigless

WELL STATUS

Surf Csg: 8 5/8' @ 322' Prod Csg: 5 1/2" @ 5851' Csg PBTD: 5789' WL

Tbg: Size: Wt: Grd: Pkr/EOT @: BP/Sand PBTD: 4690'

Plug 5030' 4855'

PERFORATION RECORD

Zone	Perfs	SPF/#shots	Zone	Perfs	SPF/#shots
C sds	4577-4585'	4/32			
B2 sds	4742-4751'	4/36			
A1 sds	4914-4926'	4/48			
CP4 sds	5530-5550'	4/80			

CHRONOLOGICAL OPERATIONS

Date Work Performed: 8-Dec-06 **SITP:** **SICP:** 1442

Day2d.
RU WLT. RIH w/ frac plug & 8' perf gun. Set plug @ 4690'. Perforate C sds @ 4577-85' w/ 4 spf for total of 32 shots RU BJ stage #4 w/ 26,560#'s of 20/40 sand in 342 bbls of Lightning 17 frac fluid. Open well w/ 1605 psi on casing Perfs broke down @ 3720 psi. Treated @ ave pressure of 2804 w/ ave rate of 25 bpm w/ 6.5 ppg of sand. Screened out frac w/ 18,577#'s in perfs, 7983#'s in casing w/ 6 ppg on perfs w/ 50 bbls left in flush. 1809 bbls EWTR. RD BJ & WLT. Flow well back. Well flowed for 3 hours & died w/ 200 bbls rec'd. SIFN.

FLUID RECOVERY (BBLS)

Starting fluid load to be recovered: 1809 Starting oil rec to date:

Fluid lost/recovered today: 200 Oil lost/recovered today:

Ending fluid to be recovered: 1609 Cum oil recovered:

IFL: FFL: FTP: Choke: Final Fluid Rate: Final oil cut:

STIMULATION DETAIL

Base Fluid used: Lightning 17 Job Type: Sand frac

Company: BJ Services

Procedure or Equipment detail: C sds down casing

2982 gals of pad
2319 gals w/ 1-4 ppg of 20/40 sand
6711 gals w/ 4-6.5 ppg of 20/40 sand
Flush w/ 4242 gals of slick water

Max TP: 4200 Max Rate: 25 Total fluid pmpd: 342 bbls

Avg TP: 2804 Avg Rate: 25 Total Prop pmpd: 26,560#'s

ISIP: 4200 5 min: 10 min: FG: NA

Completion Supervisor: Ron Shuck

COSTS

DAILY COST: $0

TOTAL WELL COST: $0

NEWFIELD

ATTACHMENT G-1
6 of 8

DAILY COMPLETION REPORT

WELL NAME: Federal 8-22-9-16 **Report Date:** Dec. 12, 2006 **Day:** 03

Operation: Completion **Rig:** Western #4

WELL STATUS

Surf Csg: 8 5/8' @ 322' Prod Csg: 5 1/2" @ 5851' Csg PBTD: 5789' WL

Tbg: Size: 2 7/8" Wt: 6.5# Grd: J-55 Pkr/EOT @: 4704' BP/Sand PBTD:

Plug 5030' 4855'

PERFORATION RECORD

Zone	Perfs	SPF/#shots	Zone	Perfs	SPF/#shots
C sds	4577-4585'	4/32			
B2 sds	4742-4751'	4/36			
A1 sds	4914-4926'	4/48			
CP4 sds	5530-5550'	4/80			

CHRONOLOGICAL OPERATIONS

Date Work Performed: Dec. 11, 2006 **SITP:** **SICP:** 60

MIRU Western #4. Thaw wellhead & BOP W/ HO trk. Bleed pressure off well. Rec est 5 BTF. ND Cameron BOP & 5M frac head. Install 3M production tbg head & NU Weatherford Schaeffer BOP. Talley, drift, PU & TIH W/ new Weatherford 4 3/4" "Chomp" bit, bit sub & new 2 7/8 8rd 6.5# J-55 tbg. Tag fill @ 4538'. Tbg displaced 11 BW. RU power swivel. C/O sd to composite bridge plug @ 4690'. Drill out plug in 28 minutes. Circ hole clean W/ no fluid loss Hang back swivel. SIFN W/ EOT @ 4704'. Est 1593 BWTR.

FLUID RECOVERY (BBLS)

Starting fluid load to be recovered: 1609 Starting oil rec to date:

Fluid lost/recovered today: 16 Oil lost/recovered today:

Ending fluid to be recovered: 1593 Cum oil recovered:

IFL: FFL: FTP: Choke: Final Fluid Rate: Final oil cut:

STIMULATION DETAIL

Base Fluid used: Job Type:

Company:

Procedure or Equipment detail:

Max TP: Max Rate: Total fluid pmpd:

Avg TP: Avg Rate: Total Prop pmpd:

ISIP: 5 min: 10 min: FG:

Completion Supervisor: Gary Dietz

COSTS

DAILY COST: $0

TOTAL WELL COST: $0

NEWFIELD

ATTACHMENT G-1
7 of 8

DAILY COMPLETION REPORT

WELL NAME: Federal 8-22-9-16 **Report Date:** Dec. 13, 2006 **Day:** 04

Operation: Completion **Rig:** Western #4

WELL STATUS

Surf Csg: 8 5/8' @ 322' Prod Csg: 5 1/2" @ 5851' Csg PBTD: 5829'

Tbg: Size: 2 7/8" Wt: 6.5# Grd: J-55 Pkr/EOT @: 5778' BP/Sand PBTD: 5829'

PERFORATION RECORD

Zone	Perfs	SPF/#shots	Zone	Perfs	SPF/#shots
C sds	4577-4585'	4/32			
B2 sds	4742-4751'	4/36			
A1 sds	4914-4926'	4/48			
CP4 sds	5530-5550'	4/80			

CHRONOLOGICAL OPERATIONS

Date Work Performed: Dec. 12, 2006 **SITP:** 0 **SICP:** 0

Thaw wellhead, BOP & tbg stump W/ HO trk. No pressure on well. Con't PU & TIH W/ bit & tbg f/ 4704'. Tag fill @ 4844'. PU swivel. Con't C/O sd & drill out composite bridge plugs as follows (using conventional circulation): sd @ 4844', plug @ 4855' in 17 minutes; sd @ 4910', plug @ 5030' in 17 minutes. Hang back swivel & con't PU tbg. Tag fil @ 5668'. PU swivel. Drill plug remains & sd to PBTD @ 5829'. Circ hole clean W/ no fluid loss. RD swivel & pull EOT to 5778'. RU swab equipment. IFL @ sfc. Made 13 swb runs rec 143 BTF W/ light gas, tr oil & no sd. FFL @ 2100' SIFN W/ est 1450 BWTR.

FLUID RECOVERY (BBLS)

Starting fluid load to be recovered: 1593 Starting oil rec to date:

Fluid lost/recovered today: 143 Oil lost/recovered today:

Ending fluid to be recovered: 1450 Cum oil recovered:

IFL: sfc FFL: 2100' FTP: Choke: Final Fluid Rate: Final oil cut: tr

STIMULATION DETAIL

Base Fluid used: Job Type:

Company:

Procedure or Equipment detail:

Max TP: Max Rate: Total fluid pmpd:

Avg TP: Avg Rate: Total Prop pmpd:

ISIP: 5 min: 10 min: FG:

Completion Supervisor: Gary Dietz

COSTS

DAILY COST: $0

TOTAL WELL COST: $0

NEWFIELD

ATTACHMENT G-1
8 of 8

DAILY COMPLETION REPORT

WELL NAME: Federal 8-22-9-16 **Report Date:** Dec. 14, 2006 **Day:** 05

Operation: Completion **Rig:** Western #4

WELL STATUS

Surf Csg: 8 5/8' @ 322' **Prod Csg:** 5 1/2" @ 5851' **Csg PBTD:** 5829'

Tbg: **Size:** 2 7/8" **Wt:** 6.5# **Grd:** J-55 **Anchor @:** 5530' **BP/Sand PBTD:** 5829'

PERFORATION RECORD

Zone	Perfs	SPF/#shots	Zone	Perfs	SPF/#shots
C sds	4577-4585'	4/32			
B2 sds	4742-4751'	4/36			
A1 sds	4914-4926'	4/48			
CP4 sds	5530-5550'	4/80			

CHRONOLOGICAL OPERATIONS

Date Work Performed: Dec. 13, 2006 **SITP:** 150 **SICP:** 125

Thaw wellhead, BOP & tbg stump W/ HO trk. Bleed gas off well. TIH W/ tbg. Tag sd @ 5814' (15' new fill). C/O sd to PBTD @ 5829'. Circ hole clean. Lost est 45 BW & rec tr oil. LD excess tbg. TOH W/ tbg--LD bit. TIH W/ BHA & production tbg as follows: 2 7/8 NC, 2 jts tbg, SN, 1 jt tbg new CDI 5 1/2" TA (45K) & 175 jts 2 7/8 8rd 6.5# J-55 tbg. ND BOP. Set TA @ 5530' W/ SN @ 5564' & EOT @ 5629'. Land tbg W/ 15,000# tension. NU wellhead. PU & TIH W/ pump and "B" grade rod string as follows: new CDI 2 1/2" X 1 1/2" X 14' RHAC pump, 6-1 1/2" weight rods, 10 3/4" scrapered rods, 106-3/4" plain rods, 100-3/4" scrapered rods, 2-4' X 3/4" pony rods and 1 1/2" X 22' polished rod. Seat pump & RU pumping unit. W/ tbg full, pressure test tbg & pump to 200 psi. Stroke pump up W/ unit to 800 psi. Good pump action. RDMOSU. Est 1495 BWTR.
Place well on production @ 5:00 PM 12/13/2006 W/ 65" SL @ 5 SPM.
FINAL REPORT!!

FLUID RECOVERY (BBLS)

Starting fluid load to be recovered: 1450 **Starting oil rec to date:**

Fluid lost/recovered today: 45 **Oil lost/recovered today:**

Ending fluid to be recovered: 1495 **Cum oil recovered:**

IFL: **FFL:** **FTP:** **Choke:** **Final Fluid Rate:** **Final oil cut:**

	TUBING DETAIL	ROD DETAIL	COSTS	
KB	12.00'	1 1/2" X 22' polished rod		
175	2 7/8 J-55 tbg (5517.93')	2-4' X 3/4" pony rods		
	TA (2.80' @ 5529.93' KB)	100-3/4" scrapered rods		
1	2 7/8 J-55 tbg (31.70')	106-3/4" plain rods		
	SN (1.10' @ 5564.43' KB)	10-3/4" scrapered rods		
2	2 7/8 J-55 tbg (63.05')	6-1 1/2" weight rods		
	2 7/8 NC (.45')	CDI 2 1/2" X 1 1/2" X 14'		
EOT	5629.03' W/ 12' KB	RHAC pump W/ SM plunger		
			DAILY COST:	$0
			TOTAL WELL COST:	$0

Completion Supervisor: Gary Dietz

ATTACHMENT H

WORK PROCEDURE FOR PLUGGING AND ABANDONMENT

1.		Set CIBP @ 4527'
2.	Plug #1	Set 100' plug on top of CIBP using 12 sx Class "G" cement
3.	Plug #2	182' balance plug using 22 sx Class "G" cement 50' above Trona-Bird's Nest extending 50' below base of Mahogany Oil Shale
4.	Plug #3	120' balance plug using 14 sx Class "G" cement 60'above Uinta/Green River and extending 60' below
5.	Plug #4	Pump 44 sx Class "G" cement down 5 ½" casing to 373'

The approximate cost to plug and abandon this well is $42,000.

ATTACHMENT H-1

Federal 8-22-9-16

Spud Date: 11/01/06
Put on Production: 12/13/06

K.B.: 5791, G.L.: 5779

Initial Production: BOPD, MCFD, BWPD

Proposed P & A
Wellbore Diagram

SURFACE CASING

CSG SIZE: 8-5/8"
GRADE: J-55
WEIGHT: 24#
LENGTH: 7 jts. (310.68')
DEPTH LANDED: 322.53' KB
HOLE SIZE:12-1/4"
CEMENT DATA: 160 sxs Class "G" cmt, est 5 bbls cmt to surf.

PRODUCTION CASING

CSG SIZE: 5-1/2"
GRADE: J-55
WEIGHT: 15.5#
LENGTH: 133 jts. (5837.43')
DEPTH LANDED: 5850.68' KB
HOLE SIZE: 7-7/8"
CEMENT DATA: 322 sxs Prem. Lite II mixed & 450 sxs 50/50 POZ.
CEMENT TOP: 60'

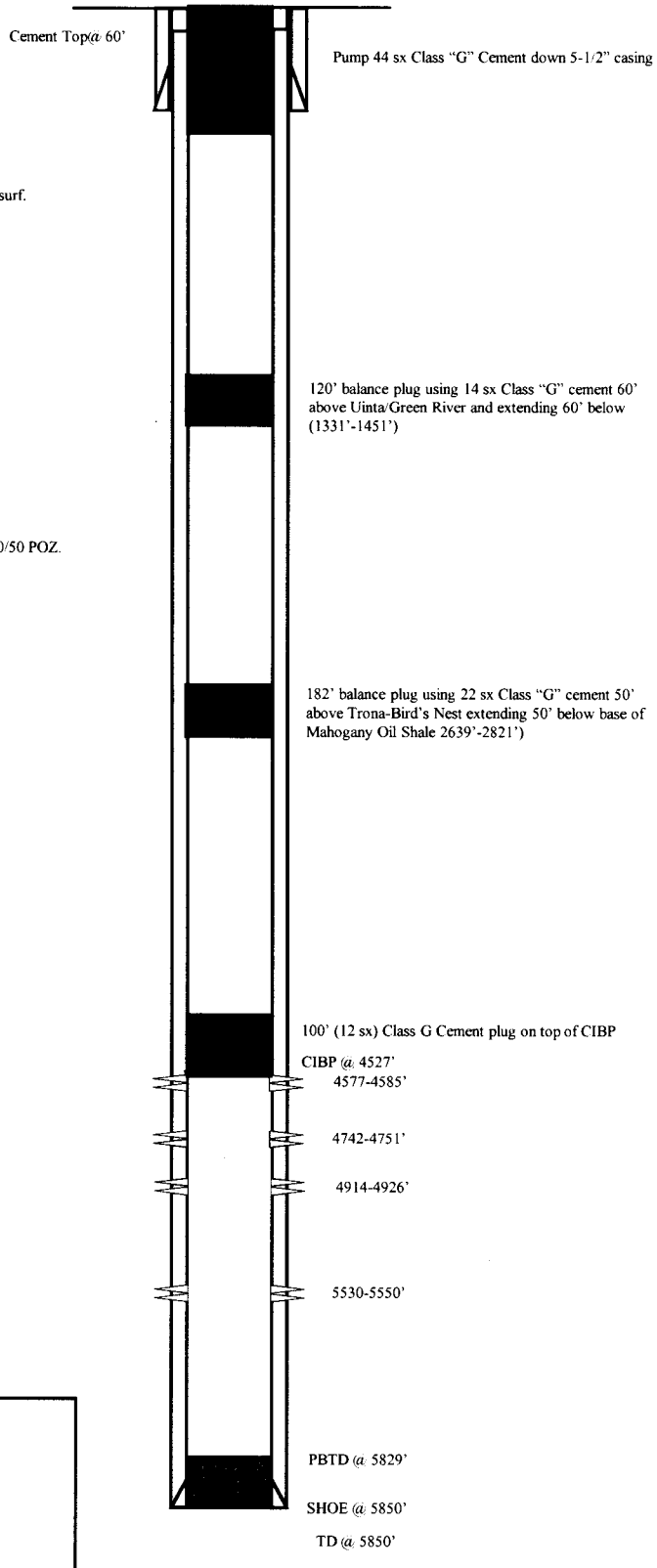

NEWFIELD

Federal 8-22-9-16

2200' FNL & 618' FEL

SE/NE Section 22-T9S-R16E

Duchesne Co, Utah

API #43-013-32959; Lease #UTU-64379

JL 3/19/2014