001

STATE OF UTAH
DEPARTMENT OF NATURAL RESOURCES
DIVISION OF OIL, GAS AND MINING

FORM 3

AMENDED REPORT ☐
(highlight changes)

APPLICATION FOR PERMIT TO DRILL

5. MINERAL LEASE NO: 14-20-H62-5016
6. SURFACE: INDIAN

1A. TYPE OF WORK: DRILL [X] REENTER ☐ DEEPEN ☐

7. IF INDIAN, ALLOTTEE OR TRIBE NAME: UTE

B. TYPE OF WELL: OIL [X] GAS ☐ OTHER _____ SINGLE ZONE [X] MULTIPLE ZONE ☐

8. UNIT or CA AGREEMENT NAME:

2. NAME OF OPERATOR: BERRY PETROLEUM COMPANY

9. WELL NAME and NUMBER: UTE TRIBAL 13-14-55

3. ADDRESS OF OPERATOR: RT. 3 BOX 3020 CITY ROOSEVELT STATE UTAH ZIP 84066
PHONE NUMBER: (435)722-1325

10. FIELD AND POOL, OR WILDCAT: BRUNDAGE CANYON

4. LOCATION OF WELL (FOOTAGES)
AT SURFACE: 744' FSL, 569' FWL 549329 X 40.04136 4432298 Y -110.42177 40.041311 LAT 110.422528 LONG
AT PROPOSED PRODUCING ZONE: SAME AS ABOVE

11. QTR/QTR, SECTION, TOWNSHIP, RANGE, MERIDIAN: (SW/SW) SEC. 14, T.5S., R.5W. U.S.B. & M.

14. DISTANCE IN MILES AND DIRECTION FROM NEAREST TOWN OR POST OFFICE: 31.90 MILES FROM MYTON, UTAH

12. COUNTY: DUCHESNE
13. STATE: UTAH

15. DISTANCE TO NEAREST PROPERTY OR LEASE LINE (FEET): 569'
16. NUMBER OF ACRES IN LEASE: 640
17. NUMBER OF ACRES ASSIGNED TO THIS WELL: 40

18. DISTANCE TO NEAREST WELL (DRILLING, COMPLETED, OR APPLIED FOR) ON THIS LEASE (FEET): 2747'
19. PROPOSED DEPTH: 5967'
20. BOND DESCRIPTION: RLB0005651

21. ELEVATIONS (SHOW WHETHER DF, RT, GR, ETC.): 6797' GR
22. APPROXIMATE DATE WORK WILL START: REFER TO BPC SOP PLAN
23. ESTIMATED DURATION: REFER TO BPC SOP PLAN

24. PROPOSED CASING AND CEMENTING PROGRAM

SIZE OF HOLE	CASING SIZE, GRADE, AND WEIGHT PER FOOT	SETTING DEPTH	CEMENT TYPE, QUANTITY, YIELD, AND SLURRY WEIGHT

REFER TO BERRY PETROLEUM COMPANY SOP'S DRILLING PROGRAM/CASING DESIGN

OPERATOR REQUESTS PERMISSION TO DRILL THE SUBJECT WELL. PLEASE SEE THE ATTACHED CONDITIONS FOR APPROVAL.

IF YOU REQUIRE ADDITIONAL INFORMATION PLEASE CONTACT:
EDDY COURTRIGHT
1614 SOUTH 2000 WEST
RT. 3 BOX 3020
ROOSEVELT, UTAH 84066
OFFICE: (435)722-1325 CELLULAR: (435)823-1862

25. ATTACHMENTS

VERIFY THE FOLLOWING ARE ATTACHED IN ACCORDANCE WITH THE UTAH OIL AND GAS CONSERVATION GENERAL RULES:

[X] WELL PLAT OR MAP PREPARED BY LICENSED SURVEYOR OR ENGINEER
[X] EVIDENCE OF DIVISION OF WATER RIGHTS APPROVAL FOR USE OF WATER
[X] COMPLETE DRILLING PLAN (BPC SOP ON FILE WITH STATE)
☐ FORM 5, IF OPERATOR IS PERSON OR COMPANY OTHER THAN THE LEASE OWNER

NAME (PLEASE PRINT) DEBBIE L. WISENER TITLE PRODUCTION & REGULATORY TECHNICIAN

SIGNATURE _____ DATE 05/25/04

(This space for State use only)

API NUMBER ASSIGNED: 43-013-32600

APPROVAL

Approved by the Utah Division of Oil, Gas and Mining
Date: 06-07-04
By: _____

RECEIVED
JUN 04 2004
DIV. OF OIL, GAS & MINING

(11/2001)

Federal Approval of this Action is Necessary

(See Instructions on Reverse Side)

T5S, R5W, U.S.B.&M.

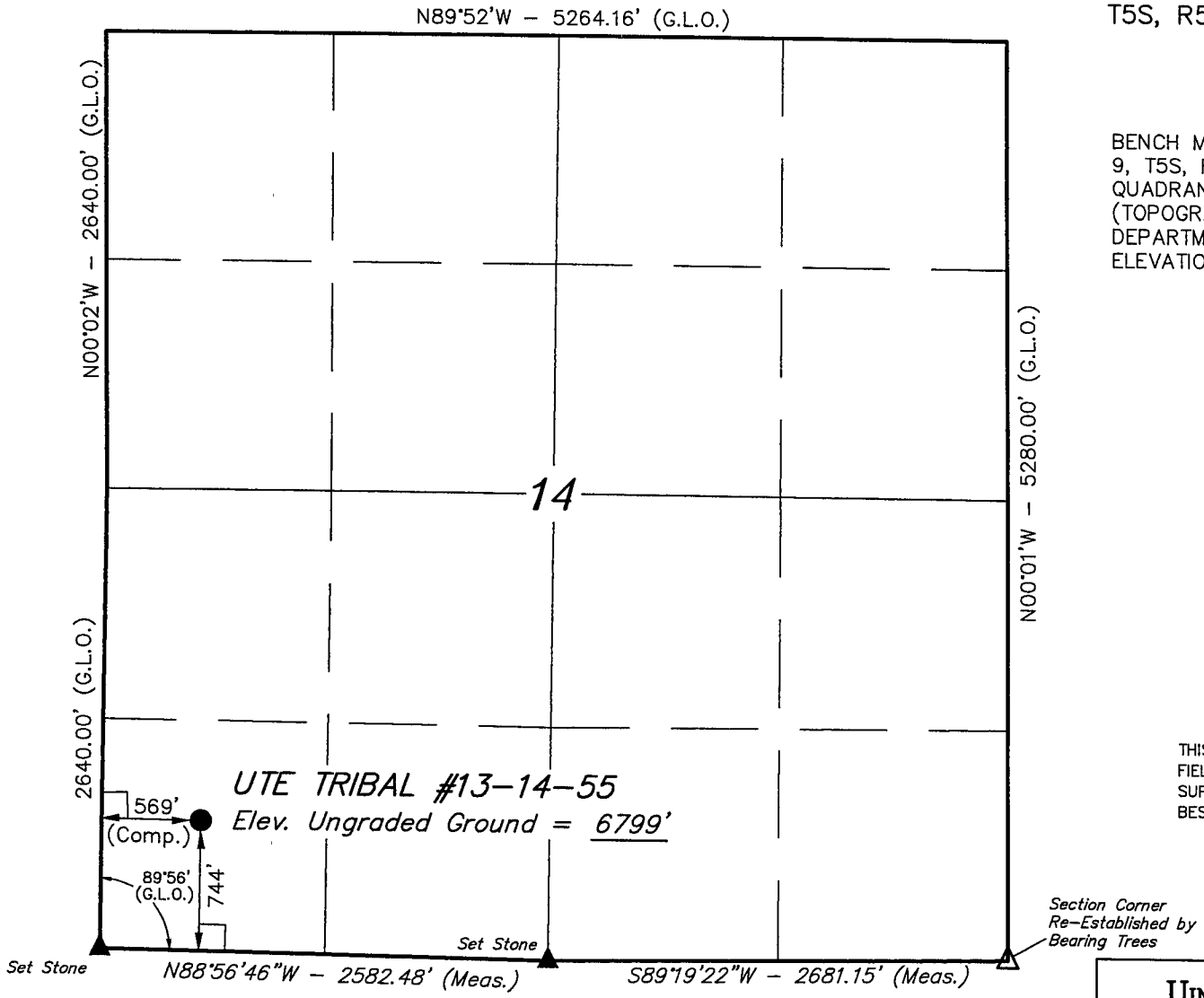

BERRY PETROLEUM COMPANY

Well location, UTE TRIBAL #13-14-55, located as shown in the SW 1/4 SW 1/4 of Section 14, T5S, R5W, U.S.B.&M. Duchesne County, Utah.

BASIS OF ELEVATION

BENCH MARK (M67) LOCATED IN THE SW 1/4 OF SECTION 9, T5S, R4W, U.S.B.&M. TAKEN FROM THE DUCHESNE SE QUADRANGLE, UTAH, DUCHESNE COUNTY, 7.5 MINUTE QUAD. (TOPOGRAPHIC MAP) PUBLISHED BY THE UNITED STATES DEPARTMENT OF THE INTERIOR, GEOLOGICAL SURVEY. SAID ELEVATION IS MARKED ON CAP AS BEING 6097 FEET.

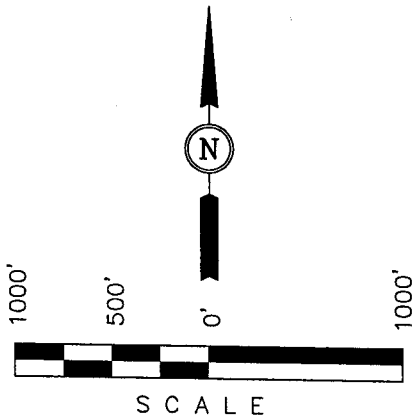

CERTIFICATE

THIS IS TO CERTIFY THAT THE ABOVE PLAT WAS PREPARED FROM FIELD NOTES OF ACTUAL SURVEYS MADE BY ME OR UNDER MY SUPERVISION AND THAT THE SAME ARE TRUE AND CORRECT TO THE BEST OF MY KNOWLEDGE AND BELIEF.

REGISTERED LAND SURVEYOR
REGISTRATION NO. 161319
STATE OF UTAH

LEGEND:

└ = 90° SYMBOL
● = PROPOSED WELL HEAD.
▲ = SECTION CORNERS LOCATED.
△ = SECTION CORNERS RE-ESTABLISHED. (Not Set on Ground)

BASIS OF BEARINGS

BASIS OF BEARINGS IS A G.P.S. OBSERVATION.
(NAD 83)
LATITUDE = 40°02'28.72" (40.041311)
LONGITUDE = 110°25'21.10" (110.422528)

UINTAH ENGINEERING & LAND SURVEYING
85 SOUTH 200 EAST – VERNAL, UTAH 84078
(435) 789-1017

SCALE 1" = 1000'	DATE SURVEYED: 11-21-03	DATE DRAWN: 12-09-03
PARTY S.H. L.M. D.R.B.	REFERENCES G.L.O. PLAT	
WEATHER COLD	FILE BERRY PETROLEUM COMPANY	

002

SELF-CERTIFICATION STATEMENT

The following self -certification statement is provided per federal requirements dated June 15, 1988.

Please be advised that Berry Petroleum Company is considered to be the operator of the following well.

Ute Tribal 13-14-55
SW 1/4, SW 1/4, 744' FSL 569' FWL, Section 14, T. 5 S., R. 5 W., U.S.B.&M.
Lease BIA 14-20-H62-5016
Duchesne, County, Utah

Berry Petroleum Company is responsible under the terms of the lease for the operations conducted upon the lease lands.

Debbie L. Wisener
Production & Regulatory Technician
Berry Petroleum Company
1614 South 2000 West
Route 3, Box 3020
Roosevelt, Utah 84066
435-722-1325

BERRY PETROLEUM COMPANY
Ute Tribal 13-14-55
Surface location SW 1/4, SW 1/4, 744' FSL 569' FWL, Section 14, T. 5 S., R. 5 W., U.S.B.&M.
Duchesne County, Utah

ONSHORE ORDER NO. 1

DRILLING PROGRAM

1,2 Estimated Tops of Geological Markers and Formations Expected to Contain Water, Oil and Gas and Other Minerals

Formation	Depth
Uinta	surface
Green River	1297'
Mahogany	2551'
TGR3 Marker	3577'
*Douglas Creek	4346'
*Castle Peak	5253'
Uteland Butte Ls.	5681'
Wasatch	5917'
TD	5967'

*PROSPECTIVE PAY

3 Pressure Control Equipment

PLEASE REFER TO BERRY PETROLEUM COMPANY STANDARD OPERATING PROCEDURE (SOP VERSION: AUGUST 28, 2003).

4 Proposed Casing and Cementing Program

PLEASE REFER TO BERRY PETROLEUM COMPANY STANDARD OPERATING PROCEDURE (SOP VERSION: AUGUST 28, 2003).

5 Drilling Fluids Program

PLEASE REFER TO BERRY PETROLEUM COMPANY STANDARD OPERATING PROCEDURE (SOP VERSION: AUGUST 28, 2003).

6 Evaluation Program

PLEASE REFER TO BERRY PETROLEUM COMPANY STANDARD OPERATING PROCEDURE (SOP VERSION: AUGUST 28, 2003).

7 Abnormal Conditions

PLEASE REFER TO BERRY PETROLEUM COMPANY STANDARD OPERATING PROCEDURE (SOP VERSION: AUGUST 28, 2003).

8 Anticipated Starting Dates and Notification of Operations

PLEASE REFER TO BERRY PETROLEUM COMPANY STANDARD OPERATING PROCEDURE (SOP VERSION: AUGUST 28, 2003).

9 Other information

PLEASE REFER TO BERRY PETROLEUM COMPANY STANDARD OPERATING PROCEDURE (SOP VERSION: AUGUST 28, 2003).

BERRY PETROLEUM COMPANY
Ute Tribal 13-14-55
Surface location SW 1/4, SW 1/4, 744' FSL 569' FWL, Section 14, T. 5 S., R. 5 W., U.S.B.&M.
Duchesne County, Utah

ONSHORE ORDER NO. 1

MULTI POINT SURFACE USE & OPERATIONS PLAN

1 Existing Roads

To reach the Berry Petroleum Company well, Ute Tribal 13-14-55 location, in Section 14-T5S-R5W:

Start in Myton, Utah. Proceed west on US Highway 40, 8.8 miles to the Antelope Creek/Sowers Canyon Road at the Bridgeland turnoff. Turn south and proceed southwest 15.6 miles. Turn north and proceed north to the Cottowood Ridge Road and then west and south 5.5 miles. Turn east and proceed southeast 2.0 miles to Ute Tribal 13-14-55 location.

The existing oilfield service road may need some surface material to prevent or repair holes in the road due to heavy truck traffic during the drilling and completion operation. If repairs are made the operator will secure material from private sources.

Please see the attached map for additional details.

2 Planned Access Road

See Topographic Map "B" for the location of the proposed access road.

3 Location of Existing Wells

See Topographic Map "C" for the location of existing wells within a 1mile radius.

4 Location of Tank Batteries, Production Facilities and Production Gathering and Service Lines

PLEASE REFER TO BERRY PETROLEUM COMPANY STANDARD OPERATING PROCEDURE (SOP VERSION: AUGUST 28, 2003).

5 Location and Type of Water Supply

Water for the drilling and completion will be pumped or trucked from the Berry source wells located in Sec. 23, T5S, R5W or Sec. 24, T5S, R5W, permit # 43-11041, or from East Duchesne Water, Arcadia Feedlot, Sec. 28, T3S, R3W or from Petroglyph Operating Company 08-04 Waterplant, Sec. 8, T5S, R3W or from Kenneth V. & Barbara U. Richens source well located in Sec. 34, T3S, R2W, permit # 43-1723 or Leo Foy source well located in Sec. 34, T5S, R5W, permit # 43-11324. A water use agreement is also in place with the Ute Tribe.

6 Source of Construction Materials

PLEASE REFER TO BERRY PETROLEUM COMPANY STANDARD OPERATING PROCEDURE (SOP VERSION: AUGUST 28, 2003).

7 Methods of Handling Waste Materials

PLEASE REFER TO BERRY PETROLEUM COMPANY STANDARD OPERATING PROCEDURE (SOP VERSION: AUGUST 28, 2003).

8 Ancillary Facilities

PLEASE REFER TO BERRY PETROLEUM COMPANY STANDARD OPERATING PROCEDURE (SOP VERSION: AUGUST 28, 2003).

9 Wellsite Layout

The attached Location Layout diagram describes drill pad cross-sections, cuts and fills, and locations of the mud tanks, reserve pit, pipe racks, trailer parking, spoil dirt stockpile(s) and surface material stockpile(s)

10 Plans for Restoration of the Surface

PLEASE REFER TO BERRY PETROLEUM COMPANY STANDARD OPERATING PROCEDURE (SOP VERSION: AUGUST 28, 2003).

11 Surface Ownership

Ute Indian Tribe

12 Other information

PLEASE REFER TO BERRY PETROLEUM COMPANY STANDARD OPERATING PROCEDURE (SOP VERSION: AUGUST 28, 2003).

13 Operator's Representative and Certification

A) Representative

NAME: Debbie L. Wisener

ADDRESS: Berry Petroleum Company
1614 South 2000 West
Route 3, Box 3020
Roosevelt, Utah 84066

PHONE: 435-722-1325

All lease and/or unit operations will be conducted in such a manner that full compliance is made with all applicable laws, regulations and onshore oil and gas orders. The operator is fully responsible for the actions of its subcontractors. A copy of these conditions will be furnished to the field representative to ensure compliance.

The drilling permit will be valid for a period of one year from the date of approval. After permit termination, a new application will be filed for approval for any future operations.

B) Certification:

I hereby certify that I, or persons under my direct supervision, have inspected the proposed drillsite and access route; that I am familiar with the conditions which presently exist; that the statements made in this plan are, to the best of my knowledge and belief, true and correct; and that the work associated with the operations proposed herein will be performed by Berry Petroleum Company and its contractors and subcontractors in conformity with this plan and the terms and conditions under which it is approved. This statement is subject to the provisions of 18 U.S.C. 1001 for the filing of a false statement.

May 25, 04
DATE

Debbie L. Wisener
Production & Regulatory Technician
Berry Petroleum Company

APPLICATION FOR GRANT OF CORRIDOR RIGHT-OF-WAY

BERRY PETROLEUM COMPANY. having a resident or principal place of business at **Route 3 Box 3020, Roosevelt, Utah, 84066,** hereby files an application with the Bureau of Indian Affairs, pursuant to the terms and provisions of the Act of February 5, 1948 (62 Stat. 17; 25 U.S.C. 323), and to the regulations of the Department of the Interior contained in Title 25, Code of Federal Regulations, Part 169, for the grant of a Right-of-Way for the following purposes and reasons:

To construct a Drill Site & Corridor Right-of-Way for the Ute Tribal #13-14-55

Across the following described Indian Lands SE 1/4 SE 1/4 OF SECTION 13, SW 1/4 SW 1/4 OF SECTION 14 & N ½ NE 1/4 OF SECTION 22, T5S, R5W, U.S.B.&M.

Drill Site = 1.992 Ac.

Corridor R-O-W = 1.941 Ac. Total Acreage = 3.933 Acres
(Access Road & Pipeline)

3" SDR-11 Poly Pipeline

Said Right-of-Way to be approximately 2,818.92' feet in length, 30 feet in width, and 1.941 Acres, and more particularly described and shown on the map of definite location to be attached and made a part hereof.

The applicant understands and hereby expressly agrees to the following stipulations:

(a) To construct and maintain the Right-of-Way in a workmanlike manner.

(b) To pay promptly all damages and compensation, in addition to the deposit made pursuant to 169.4 determined by the Secretary to be due the landowners and authorized users and occupants of the land on account of the survey, granting, construction and maintenance of the Right-of-Way.

(c) To indemnify the landowners and authorized users and occupants against any liability for loss of life, personal injury and property damage arising from the construction, maintenance, occupancy or use of the lands by the applicant, his employees, contractors and their employees or subcontractors and their employees.

(d) To restore the lands as nearly as may be possible to their original condition upon the completion of the construction to the extent compatible with the purpose for which the Right-of-Way was granted.

(e) To clear and keep clear the lands within the Right-of-Way to the extent compatible with the purpose of the Right-of-Way; and to dispose of all vegetative and other material cut, uprooted, or otherwise accumulated during the construction and maintenance of the project.

(f) To take soil and resource conservation and protection measures, including weed control, on the land covered by the Right-of-Way.

(g) To do everything reasonable within its power to prevent and suppress fires on or near the lands to be occupied under the Right-of-Way.

(h) To build and repair such roads, fences, and trails as may be destroyed or injured by construction work and to build and maintain necessary and suitable crossings for all roads and trails that intersect the works constructed, maintained, or operated under the Right-of-Way.

(I) That upon revocation or termination of the Right-of-Way, the applicant shall, so far as is reasonably possible, restore the land to its original condition.

(j) To at all times keep the Secretary informed of its address, and in case of corporations of the address of its principal officers.

(k) That the applicant will not interfere with the use of the lands by or under the authority of the landowners for any purpose not inconsistent with the primary purpose for which the Right-of-Way is granted.

IN WITNESS THEREOF, BERRY PETROLEUM COMPANY. has caused this instrument to be executed this 10 day of May, 2004.

Chase Henelm
WITNESS

BERRY PETROLEUM COMPANY
APPLICANT

Chris Sandvin
WITNESS

Ed Courtright
Ed Courtright/Production Foreman
Route 3 Box 3020
Roosevelt, Utah 84066
Phone:(435)722-1325

SUPPORTING DOCUMENTS:

( ) Written consent of the landowners.
( ) Evidence of good faith and financial responsibility.
(x) $0 as per the terms of the Exploration and Development Agreement (14-20-H62-4728).
( ) State certified copy of corporate charter or articles of corporation.
( ) Certified copy of resolution or bylaws of the corporation authorizing the filing of the stipulation
( ) State certification that the applicant is authorized to do business in the State where the land is located.
( ) Certified copy of the articles of partnership or association.
(x) Map of definite location.
( ) Other:

BERRY PETROLEUM COMPANY
UTE TRIBAL #13-14-55
DAMAGE AREA & CORRIDOR RIGHT-OF-WAY
SECTIONS 14, 15 & 22, T5S, R5W, U.S.B.&M.

TOTAL CORRIDOR RIGHT-OF-WAY ON UTE TRIBAL LANDS

TOTAL LENGTH OF RIGHT-OF-WAY IS 2818.92' OR 0.534 MILES. WIDTH OF RIGHT-OF-WAY IS 30' (15' PERPENDICULAR ON EACH SIDE OF THE CENTERLINE). CONTAINS 1.941 ACRES MORE OR LESS.

ENGINEER'S AFFIDAVIT

STATE OF UTAH)
) SS
COUNTY OF UINTAH)

ROBERT L. KAY, BEING FIRST DULY SWORN DEPOSES AND STATES THAT HE IS THE REGISTERED LAND SURVEYOR, FOR BERRY PETROLEUM COMPANY, THAT THESE SURVEYS WERE MADE BY HIM (OR UNDER HIS SUPERVISION): THAT HE HAS EXAMINED THE FIELD NOTES OF THE SURVEYS OF THE DAMAGE AREA AND CORRIDOR RIGHT-OF-WAY AS DESCRIBED AND SHOWN ON THIS MAP, THAT THIS MAP WAS PREPARED UNDER HIS DIRECTION FROM SAID FIELD NOTES; AND THAT SAID RIGHT-OF-WAY, 0.534 MILES IN LENGTH BEGINNING AND ENDING AS SHOWN ON THIS MAP IS ACCURATELY REPRESENTED.

REGISTERED LAND SURVEYOR
REGISTRATION NO. 161319
STATE OF UTAH

ACKNOWLEDGEMENT

SUBSCRIBED AND SWORN BEFORE ME THIS 10 DAY OF May 2004.

MY COMMISSION EXPIRES Aug 17, 2006.

NOTARY PUBLIC
VERNAL, UTAH

Notary Public
TRACY D. HENLINE
3379 East 5000 South
Vernal, Utah 84078
My Commission Expires
August 17, 2006
State of Utah

APPLICANT'S CERTIFICATE

I, ED COURTRIGHT, DO HEREBY CERTIFY THAT I AM THE AGENT FOR BERRY PETROLEUM COMPANY, HEREINAFTER DESIGNATED THE APPLICANT; THAT ROBERT L. KAY WHO SUBSCRIBED TO THE FOREGOING AFFIDAVIT, IS EMPLOYED BY THE APPLICANT AS A LAND SURVEYOR AND THAT HE WAS DIRECTED BY THE APPLICANT TO SURVEY THE LOCATION OF THIS DAMAGE AREA AND CORRIDOR RIGHT-OF-WAY, 0.534 MILES IN LENGTH BEGINNING AT STA. 0+00 AND ENDING AT STA. 28+18.92, THAT SAID DAMAGE AREA AND CORRIDOR RIGHT-OF-WAY ARE ACCURATELY REPRESENTED ON THIS MAP; THAT SUCH SURVEY AS REPRESENTED ON THIS MAP HAS BEEN ADOPTED BY THE APPLICANT AS THE DEFINITE LOCATION OF THE RIGHT-OF-WAY THEREBY SHOWN; AND THAT THE MAP HAS BEEN PREPARED TO BE FILED WITH THE SECRETARY OF THE INTERIOR OR HIS DULY AUTHORIZED REPRESENTATIVE AS PART OF THE APPLICATION FOR SAID RIGHT-OF-WAY TO BE GRANTED THE APPLICANT, ITS SUCCESSORS AND ASSIGNS, WITH THE RIGHT TO CONSTRUCT, MAINTAIN, AND REPAIR IMPROVEMENTS, THEREON AND THEREOVER, FOR SUCH PURPOSES, AND WITH THE FURTHER RIGHT IN THE APPLICANT, ITS SUCCESSORS AND ASSIGNS TO TRANSFER THIS RIGHT-OF-WAY BY ASSIGNMENT, GRANT, OR OTHERWISE.

APPLICANT

PRODUCTION SUPERVISOR
TITLE

RIGHT-OF-WAY LENGTHS			
PROPERTY OWNER	FEET	ACRES	RODS
UTE TRIBAL	2,818.92'	1.941	170.84

BERRY PETROLEUM COMPANY

LOCATION DAMAGE AREA & CORRIDOR RIGHT-OF-WAY ON UTE TRIBAL LANDS

(For UTE TRIBAL #13-14-55)

LOCATED IN
SECTIONS 14, 15 & 22, T5S, R5W, U.S.B.&M.
DUCHESNE COUNTY, UTAH

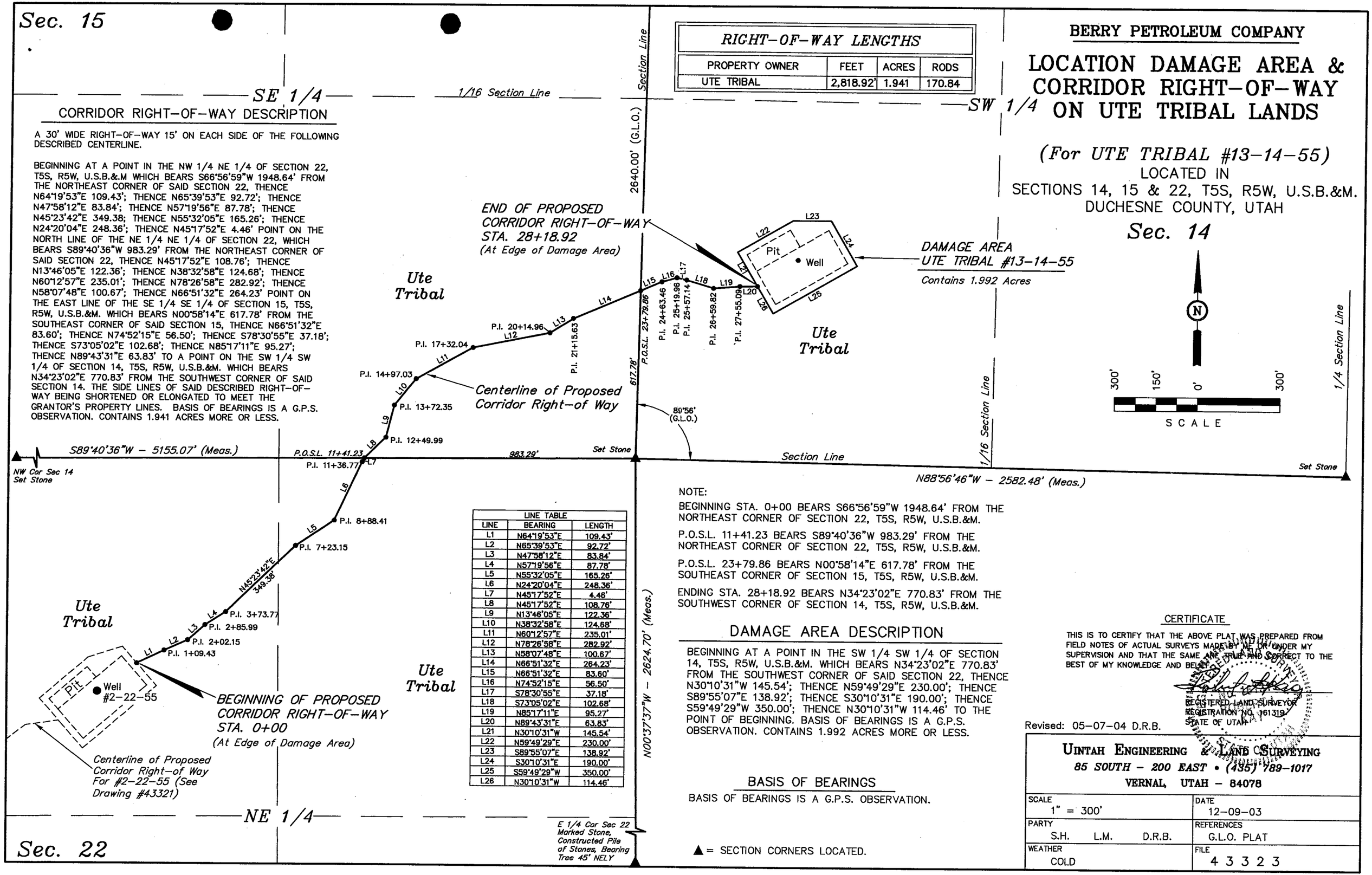

CORRIDOR RIGHT-OF-WAY DESCRIPTION

A 30' WIDE RIGHT-OF-WAY 15' ON EACH SIDE OF THE FOLLOWING DESCRIBED CENTERLINE.

BEGINNING AT A POINT IN THE NW 1/4 NE 1/4 OF SECTION 22, T5S, R5W, U.S.B.&.M WHICH BEARS S66°56'59"W 1948.64' FROM THE NORTHEAST CORNER OF SAID SECTION 22, THENCE N64°19'53"E 109.43'; THENCE N65°39'53"E 92.72'; THENCE N47°58'12"E 83.84'; THENCE N57°19'56"E 87.78'; THENCE N45°23'42"E 349.38; THENCE N55°32'05"E 165.26'; THENCE N24°20'04"E 248.36'; THENCE N45°17'52"E 4.46' POINT ON THE NORTH LINE OF THE NE 1/4 NE 1/4 OF SECTION 22, WHICH BEARS S89°40'36"W 983.29' FROM THE NORTHEAST CORNER OF SAID SECTION 22, THENCE N45°17'52"E 108.76'; THENCE N13°46'05"E 122.36'; THENCE N38°32'58"E 124.68'; THENCE N60°12'57"E 235.01'; THENCE N78°26'58"E 282.92'; THENCE N58°07'48"E 100.67'; THENCE N66°51'32"E 264.23' POINT ON THE EAST LINE OF THE SE 1/4 SE 1/4 OF SECTION 15, T5S, R5W, U.S.B.&M. WHICH BEARS N00°58'14"E 617.78' FROM THE SOUTHEAST CORNER OF SAID SECTION 15, THENCE N66°51'32"E 83.60'; THENCE N74°52'15"E 56.50'; THENCE S78°30'55"E 37.18'; THENCE S73°05'02"E 102.68'; THENCE N85°17'11"E 95.27'; THENCE N89°43'31"E 63.83' TO A POINT ON THE SW 1/4 SW 1/4 OF SECTION 14, T5S, R5W, U.S.B.&M. WHICH BEARS N34°23'02"E 770.83' FROM THE SOUTHWEST CORNER OF SAID SECTION 14. THE SIDE LINES OF SAID DESCRIBED RIGHT-OF-WAY BEING SHORTENED OR ELONGATED TO MEET THE GRANTOR'S PROPERTY LINES. BASIS OF BEARINGS IS A G.P.S. OBSERVATION. CONTAINS 1.941 ACRES MORE OR LESS.

LINE TABLE		
LINE	BEARING	LENGTH
L1	N64°19'53"E	109.43'
L2	N65°39'53"E	92.72'
L3	N47°58'12"E	83.84'
L4	N57°19'56"E	87.78'
L5	N55°32'05"E	165.26'
L6	N24°20'04"E	248.36'
L7	N45°17'52"E	4.46'
L8	N45°17'52"E	108.76'
L9	N13°46'05"E	122.36'
L10	N38°32'58"E	124.68'
L11	N60°12'57"E	235.01'
L12	N78°26'58"E	282.92'
L13	N58°07'48"E	100.67'
L14	N66°51'32"E	264.23'
L15	N66°51'32"E	83.60'
L16	N74°52'15"E	56.50'
L17	S78°30'55"E	37.18'
L18	S73°05'02"E	102.68'
L19	N85°17'11"E	95.27'
L20	N89°43'31"E	63.83'
L21	N30°10'31"W	145.54'
L22	N59°49'29"E	230.00'
L23	S89°55'07"E	138.92'
L24	S30°10'31"E	190.00'
L25	S59°49'29"W	350.00'
L26	N30°10'31"W	114.46'

NOTE:

BEGINNING STA. 0+00 BEARS S66°56'59"W 1948.64' FROM THE NORTHEAST CORNER OF SECTION 22, T5S, R5W, U.S.B.&M.

P.O.S.L. 11+41.23 BEARS S89°40'36"W 983.29' FROM THE NORTHEAST CORNER OF SECTION 22, T5S, R5W, U.S.B.&M.

P.O.S.L. 23+79.86 BEARS N00°58'14"E 617.78' FROM THE SOUTHEAST CORNER OF SECTION 15, T5S, R5W, U.S.B.&M.

ENDING STA. 28+18.92 BEARS N34°23'02"E 770.83' FROM THE SOUTHWEST CORNER OF SECTION 14, T5S, R5W, U.S.B.&M.

DAMAGE AREA DESCRIPTION

BEGINNING AT A POINT IN THE SW 1/4 SW 1/4 OF SECTION 14, T5S, R5W, U.S.B.&M. WHICH BEARS N34°23'02"E 770.83' FROM THE SOUTHWEST CORNER OF SAID SECTION 22, THENCE N30°10'31"W 145.54'; THENCE N59°49'29"E 230.00'; THENCE S89°55'07"E 138.92'; THENCE S30°10'31"E 190.00'; THENCE S59°49'29"W 350.00'; THENCE N30°10'31"W 114.46' TO THE POINT OF BEGINNING. BASIS OF BEARINGS IS A G.P.S. OBSERVATION. CONTAINS 1.992 ACRES MORE OR LESS.

BASIS OF BEARINGS

BASIS OF BEARINGS IS A G.P.S. OBSERVATION.

▲ = SECTION CORNERS LOCATED.

CERTIFICATE

THIS IS TO CERTIFY THAT THE ABOVE PLAT WAS PREPARED FROM FIELD NOTES OF ACTUAL SURVEYS MADE BY ME OR UNDER MY SUPERVISION AND THAT THE SAME ARE TRUE AND CORRECT TO THE BEST OF MY KNOWLEDGE AND BELIEF.

REGISTERED LAND SURVEYOR
REGISTRATION NO. 161319
STATE OF UTAH

Revised: 05-07-04 D.R.B.

UINTAH ENGINEERING & LAND SURVEYING
85 SOUTH – 200 EAST • (435) 789-1017
VERNAL, UTAH – 84078

SCALE 1" = 300'	DATE 12-09-03
PARTY S.H. L.M. D.R.B.	REFERENCES G.L.O. PLAT
WEATHER COLD	FILE 4 3 3 2 3

Berry Petroleum Company, Ute Tribal #13-14-55 well: A Cultural Resource Inventory for a well pad, its access and pipeline, Uintah-Ouray Ute Reservation, Duchesne County, Utah

By
James A. Truesdale

James A. Truesdale
Principle Investigator

Prepared For
Berry Petroleum Co.
1614 South 2000 West
Roosevelt, Utah
84066

Prepared By
AN INDEPENDENT ARCHAEOLOGIST
P.O.Box 153
Laramie, Wyoming
82073

Utah Project # U-04-AY-0285(i)

April 26, 2004

TABLE OF CONTENTS

Table of Contents - i

List of Figures - ii

List of Tables - ii

Introduction - 1

File Search - 1

Environment - 1

Ute Tribal #13-15-55 - - - - - - - - - - - - - - - - - - 3

Field Methods - 5

Results - 6

Site: 42DC1692 - 6

Recommendations - 10

References Cited - 11

LIST OF FIGURES

Figure 1. Location of the Berry Petroleum Co. proposed Ute Tribal #13-14-55 well, its access, pipeline and site 42DC1692 on 7.5'/1964 USGS quadrangle map Duchesne SW, Duchesne County, Utah. - 2

Figure 2. View to east at the Ute Tribal #13-14-55 well centerstake and well pad area. - - - - - - - - - - - - - - - - - - - 4

Figure 3. Figure 3. Oblique view to west of colluvial sediments on and surrounding Ute Tribal #13-14-55 well centerstake and well pad. - 4

Figure 4. View to north of site 42DC1692 site area. - - - - - - 7

Figure 5. Site 42DC1692 sketch map. - - - - - - - - - - - - - - - 8

Figure 6. Overhead view of available raw lithic source material and chipped stone debitage located across 42DC1692. - - - 9

Figure 7. Overhead closeup view of available raw lithic source material and chipped stone debitage on 42DC1692.- - - 9

LIST OF TABLES

Table 1. Breakdown of chipped stone debitage by material type at 42DC1692. - 7

Introduction

An Independent Archaeologist (AIA) was contacted by a representative of Berry Petroleum Co., to conduct a cultural resources investigation of the proposed Ute Tribal well #13-14-55 (Alt. #1: 744' FSL, 569' FWL), its access and pipeline. The location of the project area is in the SW/SW 1/4 of Section 14, T5S, R5W, Duchesne County, Utah (Figure 1). The UTM coordinate for the proposed Ute Tribal #13-14-55 well centerstake is Zone 12, NAD 83, 05/49/264mE 44/32/494mN ±5m.

From the existing Ute Tribal #13-14-55 well, the proposed access and pipeline trend northeast 2200 feet (670.7 m) to the proposed well pad.

The land surface is administered by the United States, Bureau of Indian Affairs, Phoenix Area Office, Uintah-Ouray Agency, and the Uintah-Ouray Ute tribe, Fort Duchesne, Utah. A total of 20.10 acres (10 block, 10.10 linear) was surveyed. Fieldwork was authorized through an access permit issued by the Energy and Minerals Resource Division of the Uintah-Ouray Ute tribe. The field work was conducted on April 7 and 8, 2004 by AIA archaeologist James Truesdale, and accompanied by Rudy Myore (technician, Energy and Minerals Resource Division, Uintah-Ouray Ute tribe). All the field notes and maps are located in the AIA office in Laramie, Wyoming.

File Search

A GIS file search was conducted at the Utah Division of State History (UDSH), Antiquities Section, Records Division on March 26, 2004. In addition, AIA's USGS quadrangle Duchesne SE and Duchesne SW base maps were updated from UDSH Records division Duchesne SE and Duchesne SW base maps on February 2, 2004. One project (U-03/MM-1059) had been previously recorded in the project area. However, no cultural sites and/or isolates were recorded during this project. No additional projects and/or cultural resources have been previously recorded in or adjacent to the project area.

Environment

Physiographically, the project is located in Sowers Canyon Brundage Canyon area of the Uinta Basin, approximately 25 miles southwest of Myton, Utah. The Uinta Basin is structurally the lowest part of the Colorado Plateau geographical province (Thornbury 1965:425). The Uinta Basin is a large, relatively flat, bowl shaped, east-west asymmetrical syncline near the base of the Uinta Mountains (Stokes 1986:231). The topography is characteristic of sloping surfaces which incline northward and are mainly dip slopes on the harder layers of Green River and Uinta Formations. The basin contains a thick section of more than 9000

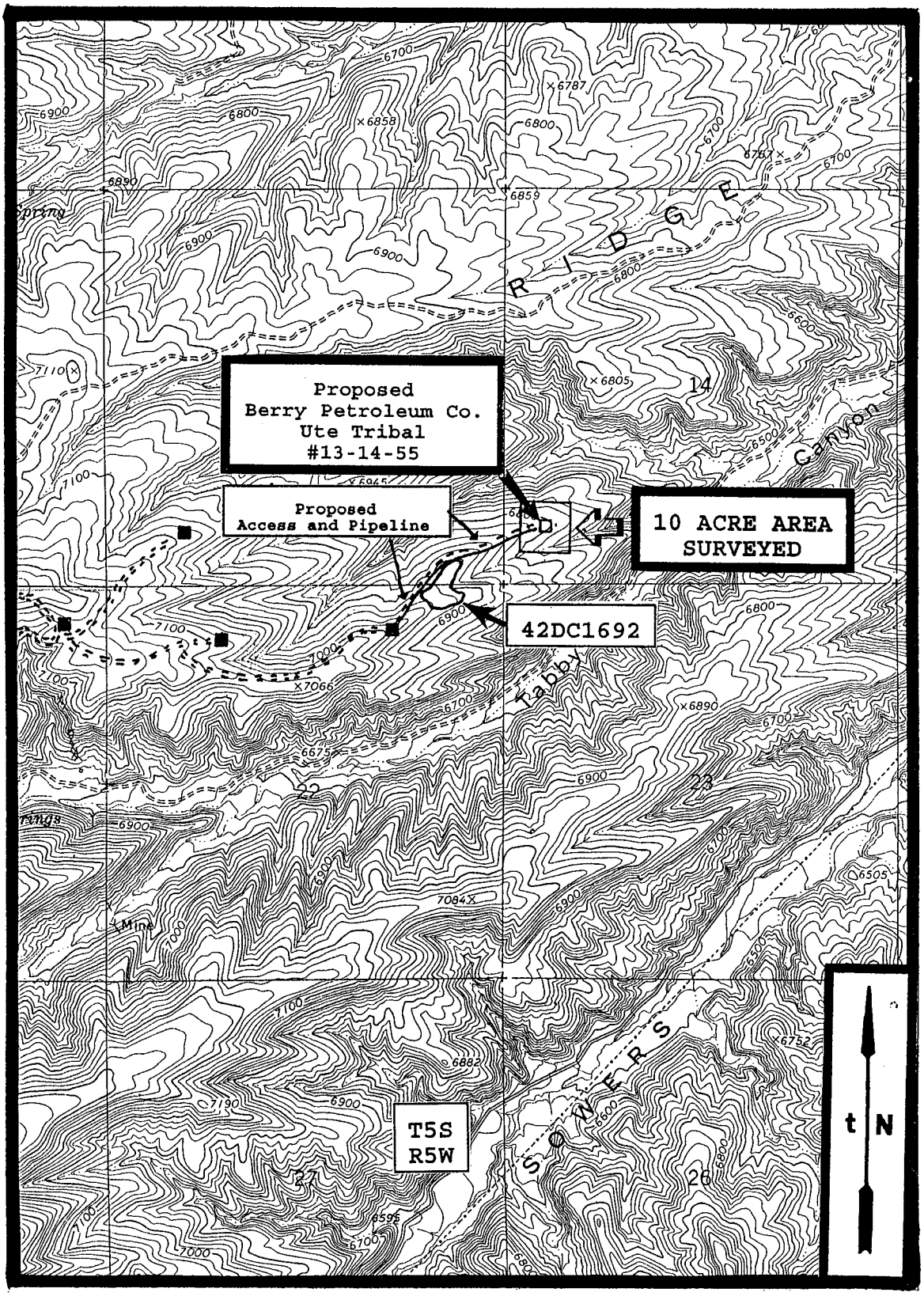

Figure 1. Location of the Berry Petroleum Co. proposed Ute Tribal #13-14-55 well, its access, pipeline and site 42DC1692 on 7.5'/1964 USSG quadrangle map Duchesne SW, Duchesne County, Utah.

feet (2743.9 m) of early Tertiary rocks (Childs 1950). These rocks are mainly Paleocene and Eocene in age and consist of sandstone, clay and shale lacustrine, fluviatile, and deltaic continental deposits, most famous of which are the lacustrine Green River Beds.

The project area is situated on the southern slopes of Cottonwood Ridge. Cottonwood Ridge is a large southwest-northeast trending ridge north of Tabby Canyon. The Tabby Canyon drainage trends northeast approximately 8 miles to Antelope Creek and then 10 miles north to the Duchesne River.

Vegetation in the project area is characteristic of a Pinon/Juniper community. Species observed in the project area include; Pinyon pine (Pinus Edulis), juniper (Juniperus Osteosperma), curl-leaf mountain mahogany (Cercocarpus ledifolius), shadscale (Atriplex confertifolia), sand sage, (Artemesia filifolia), saltbush (Atriplex nuttallii), rabbitbrush (Chrysothamnus viscidiflorus), winterfat (Eurotia lanata), greasewood (Sarcobatus baileyi), Indian ricegrass (Oryzopsis hymenoides), desert needlegrass (Stipa speciosa), wild buckwheat, Eriogonum ovvalifolium), silky lupine (Lupinus sericeus), desert globemallow (Bromus tectorum), sky rocket (Gilia aggregata), peppergrass (Lepidium perfoliatum), Russian thistle (Salsola kali), and prickly pear cactus (Opuntia spp.).

Ute Tribal #13-14-55

The immediate proposed Berry Petroleum Co. Ute Tribal #13-14-55 well is situated on the top and eastern slope of a narrow small southwest-northeast trending ridge (Figure 2). The top of the ridge is flat with gentle southern and northern slopes. This small narrow ridge is part of the southern drainage slope of the much larger southwest-northeast trending Cottonwood Ridge north of Tabby Canyon.

Sediments on the small ridge top, surrounding the well pad, consist of shallow (<5 cm), poorly sorted, loosely compacted, tan to light brown silty sandy loam mixed with small to medium sized flat angular pieces of sandstone (Figure 3). Vegetation on the well location is dominated by thick Pinyon/juniper with a understory of mountain mahogany, low sage, yucca, bunchgrasses, and prickly pear cactus. The proposed well location is located at an elevation of 6802.7 feet (2074.1 m) AMSL.

From the existing Ute Tribal #2-22-55 well pad, the proposed access and pipeline trend northeast 2200 feet (609.7 m) to the proposed well pad. The access and pipeline trend along the northern slope of a southwest-northeast trending ridge, then crosses over the ridge to the proposed well pad. The southern rim of the ridge exhibits exposed ledges of sandstone and steep talus slopes with shallow (<5 cm) poorly sorted, loosely compacted silty

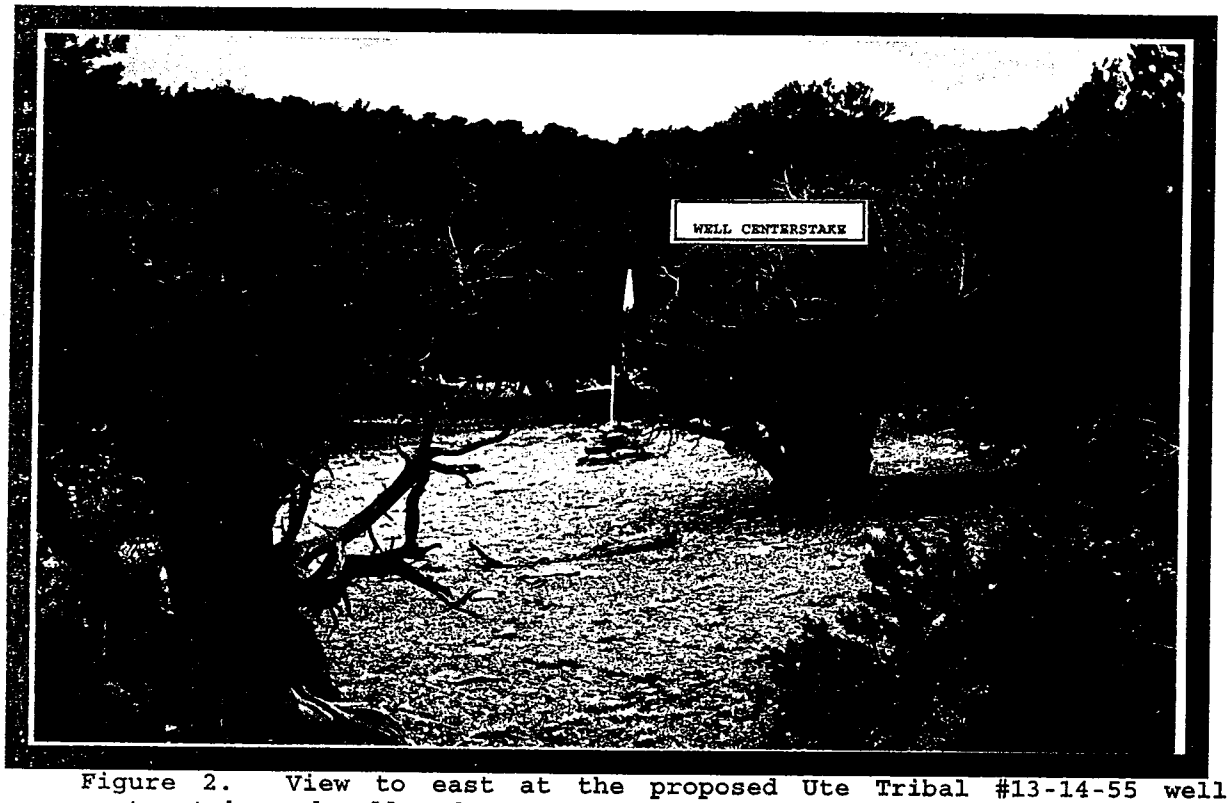

Figure 2. View to east at the proposed Ute Tribal #13-14-55 well centerstake and well pad area.

Figure 3. Oblique view to west of the colluvial sediments on and surrounding the Ute Tribal #13-14-55 well centerstake and well pad.

sandy colluvium mixed with small to large sized angular pieces of sandstone. Vegetation along the ridge slope consists of Pinyon and juniper with a understory of mountain mahogany, low sage, yucca and bunchgrasses.

The surrounding Tabby Canyon area ridge surfaces are dominated by residual angular pieces of Uinta formation sandstone that exhibit a extremely dark desert varnish (patination). Exposures of sandstone can be found along the crest of the ridges. The surrounding area vegetation is characteristic of a Pinyon/juniper community with a understory of mountain mahogany, low sagebrush, yucca, bunchgrasses along the hill and ridge slopes, and low sagebrush community in the ridge top flats and open parks.

Field Methods

A total of 10 acres was surveyed around the centerstake of the proposed well location to allow for relocation of the pad if necessary. The survey was accomplished by walking transects spaced no more than 15 meters apart. The access and pipeline parallel each other. Each of these linear corridors surveyed are 2200 feet (670.7 m) long and 100 feet (30.4 m) wide, 5.05 acres. Thus, 10.10 linear acres was surveyed.

Geologic landforms (rockshelters, alcoves, ridge tops and saddles) and areas of subsurface exposure (ant hills, blowouts, rodent holes and burrow, eroding slopes and cutbanks) were examined with special care in order to located cultural resources (sites, isolates) and possibly help assess a sites sedimentary integrity and potential for the presence and/or absence of buried intact cultural deposits. The entire surface area of ridge tops were covered. All exposures of sandstone cliff faces, alcoves or rockshelter, and talus slopes were surveyed.

When cultural materials are discovered, a more thorough survey of the immediate vicinity is conducted in order to locate any associated artifacts and to determine the horizontal extent (surface area) of the site. If no other artifacts are located during the search then the initial artifact is recorded as an isolated find. At times, isolated formal tools (typical end scrapers, projectile points) were drawn and measured. The isolate was then described and its location plotted on a U.S.G.S. topographic map using UTM coordinates.

When sites are found a Intermountain Antiquities Computer System (IMACS) form is used to record the site. At all sites, selected topographic features, site boundaries, stone tools and cultural features (hearths, foundations, trash dumps and trails) are mapped. Sites are mapped onto a 1:10 cm K&E grid paper using a Brunton compass, UTM coordinates, and pacing off distances from a mapping station (datum). All debitage is inventoried using

standard recording techniques (Truesdale 1995 et al 1995:7) according to material type, basic flake type, and so on. Selected (mostly complete) stone tools and projectile points are drawn and/or measured. All features (rockart panel(s), hearths, foundations, trash dumps and trails), are measured and described, while selected features are either drawn or photographed.

Site location data is recorded by a GARMIN Global Positioning System (GPS III Plus or E-Trex Legend). Universal Transverse Mercator (UTM) grid data is recorded in an obvious way (ie. UTM Zone 12; NAD 83; centroid coordinate: 06/15/927 mE 44/17/443 mN), along with its Estimated Position Error (EPE) and Dilution of Precision (DOP). Site elevations are taken along with each UTM coordinate. Using the GPS data, the site location was then placed on a USGS 7.5' quadrangle map.

Results

A total of 20.10 acres (10 block, 10.10 linear) were surveyed for cultural resources within and around the proposed Berry Petroleum Co. Ute Tribal #13-22-55 and along its access and pipeline. One site (42DC1692) was recorded during the survey. No additional cultural resources were recorded during the survey.

Site: 42DC1692
Location: SE/SW/SE/SE Section 15 T5S R5W
N/NW/NE/NE Section 22 T5S R5W (Figure 1)
UTM Coordinate: Zone 12, NAD 83; 5/48/790 mE 44/32/230 mN
5/48/846 mE 44/32/191 mN
5/48/948 mE 44/32/181 mN
5/48/928 mE 44/32/389 mN ± 5m

Setting: The site is situated on top of a small narrow southwest-northeast trending ridge (Figure 4). Vegetation is dominated by Pinyon pine, juniper and mountain mahogany, with a sparse understory of low sagebrush, bunch grasses, yucca and prickly pear cactus. Sediments are shallow (<10 cm) tan to light brown, poorly sorted, loosely compacted silty sandy loam mixed with angular pieces of sandstone and eroding chert nodules. The landscape is dominated by eroding residual Uinta formation sandstone, clay and shales. The surface is littered with small long angular pieces of chert. The elevation is 6945 feet (2117.3 m) AMSL.

Description: Site 42DC1692 is a small moderately dense prehistoric scatter of chipped stone debitage with tested cobbles (cores), and a biface. The site measures 198 m (SW-NE) by 158 m (E-W), 31,284 sq m (Figure 5). The site consists of a moderately dense scatter of over four hundred pieces of local light/dark brown (banded) chert chipped stone debitage. A breakdown of the debitage type by material type recorded can be found in Table 1. The chert can be

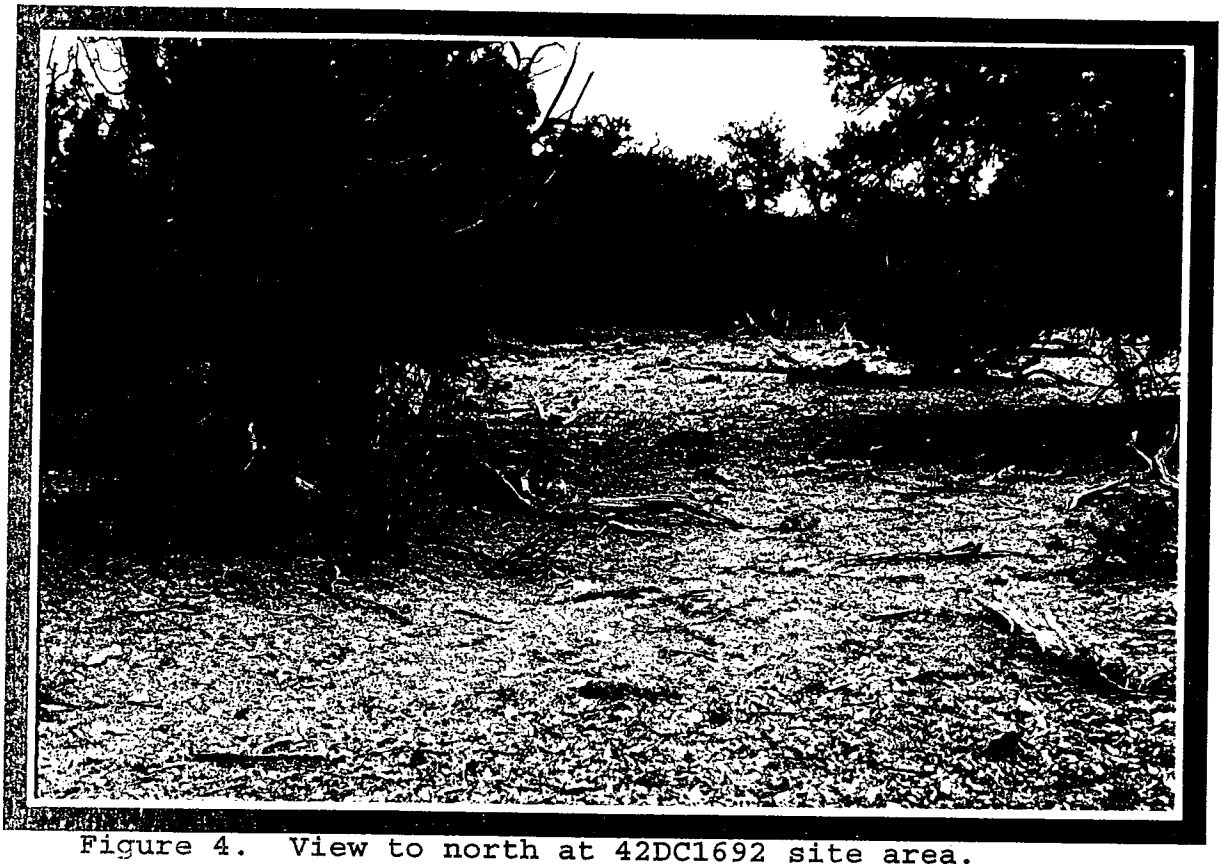

Figure 4. View to north at 42DC1692 site area.

Table 1. Breakdown of chipped stone debitage by material type at 42DC1692.

MATERIAL TYPE	PRI	SEC	TER	BTH	SHATTER	TOTAL	%
CHERT Light/Dark (banded) Brown	115	98	56	10	164	443	99.3
QUARTZITE Gray/brown	1	0	2	0	0	3	.7
TOTAL	116	98	58	10	164	446	100.0
PERCENTAGE	26.0	21.9	13.0	2.4	36.7	100.0	

found eroding from the exposures of Uinta formation in the immediate site area. The chert nodules litter the site surface (Figure 5 and 6).

The Tabby, Sowers, Brundage, Antelope Canyon area contains outcrops of various lenses of tan, light to dark brown (banded) chert nodules that have been continually extracted by prehistoric

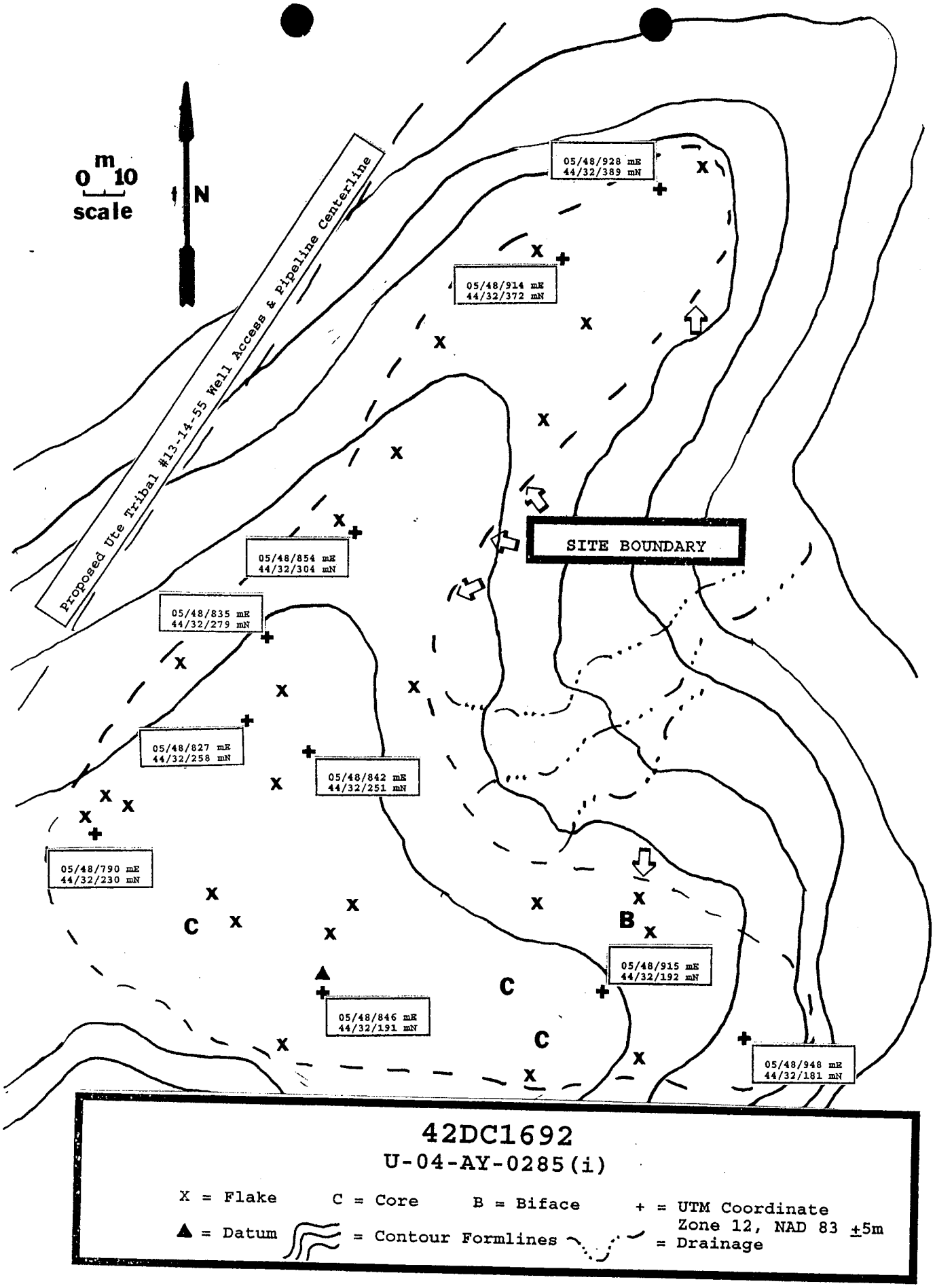

Figure 5. Site 42DC1692 sketch map.

Figure 6. Overhead view of available raw lithic source material and chipped stone debitage located across 42DC1692.

Figure 7. Overhead closeup view of available raw lithic source material and chipped stone debitage on 42DC1692.

inhabitants for thousands of years. Lithic sites similar to 42DC1692 have been previously recorded by AIA under Utah project number U-00-AY-0224(i), U-01-AY-058(i), and U-02-AY-139(i) (Truesdale 2000, 2001, 2002). Sites 42DC1305, 42DC1391, and 42DC1460 are located east of 42DC1692 and contain residual tan to light brown (banded) chert nodules that appear to have been a consistent raw lithic material source to prehistoric inhabitants that occupied the area.

The site (42DC1692) is in good condition. The site has been impacted by erosion and deflation. The possibility of additional buried raw lithic materials, chipped stone debitage, and possibly diagnostic artifacts (projectile points) is good. Additional studies relating to the lithic material source and flintknapping technology could be extracted through additional archaeological investigations at 42DC1692. Therefore, 42DC1692 is considered to be significant.

National Register Status: Site 42DC1692 has been adequately recorded, mapped, but not tested. The site is a prehistoric lithic source and primary and secondary reduction site of unknown age. The site sediments are shallow, however the possibility of buried raw lithic material, chipped stone debitage, and diagnostic artifacts (projectile points) is good. Therefore, the site may yield additional archaeological data relating to prehistoric flintknapping technology, and the temporal age of occupation and/or use for the site. Thus, 42DC1692 site is considered to be eligible for nomination and/or inclusion to the National Register of Historic Places under criterion "d."

Recommendations

A total of 20.10 acres were surveyed for cultural resources within and around the proposed Berry Petroleum Co. Ute Tribal #13-14-55 well location, its access and pipeline. One site (42DC1692) was recorded.

Site 42DC1692 is a raw lithic material source and chipped stone debitage (lithic) scatter that is situated on top of narrow ridges south ofthe proposed Ute Tribal #13-14-55 well access and pipeline corridor. The access and pipeline corridors were moved to the north to avoid the site. Therefore, the proposed access and pipeline corridors are located to the north of the site. Thus, subsequent construction of the proposed Ute Tribal #13-14-55 well pad, its access and pipeline will not impact site (42DC1692).

No additional cultural materials were recorded during the survey. Thus no further archaeological work is necessary and clearance for construction of the proposed Berry Petroleum Co. Ute Tribal #13-14-55 well location, its access and pipeline is recommended.

REFERENCES CITED

Childs, O.E.

1950 Geologic history of the Uinta Basin, Utah Geological and Mineralogical Survey. Guidebook to the Geology of Utah, N0. 5:49-59.

Stokes, William Lee

1986 Geology of Utah. Contributions by Utah Museum Natural History, and Utah Geological and Mineral Survey Department of Natural Resources. Utah Museum of Natural History, Occasional Papers, Number 6.

Thornbury, William D.

1965 Regional Geomorphology of the United States. John Wiley & Sons, Inc.

Truesdale, James A., Kathleen E Hiatt, and Clifford Duncan

1995 Cultural Resource Inventory of the Proposed Ouray Gravel Pit Location, Uintah-Ouray Ute Reservation, Uintah County, Utah. Report prepared for U & W Construction, Ft. Duchesne, Utah by AIA, Laramie, Wyoming.

2000 Barrett Resources Corp., Ute Tribal #13-25-54 well: A Cultural Resource Inventory for a well pad, its access and pipeline, Uintah-Ouray Ute Reservation, Duchesne county, Utah. Report prepared under Utah project U-00-AY-0224(i) for Barrett Res. Corp. by AIA. Report on file at AIA office Laramie, Wyoming.

2001 Barrett Resources Corp., Ute Tribal #11-23-55 well: A Cultural Resource Inventory for a well pad, its access and pipeline, Uintah-Ouray Ute Reservation, Duchesne county, Utah. Report prepared under Utah project U-01-AY-0058(i) for Barrett Res. Corp. by AIA. Report on file at AIA office Laramie, Wyoming.

2002 Barrett Resources Corp., Ute Tribal #12-28-55 well: A Cultural Resource Inventory for a well pad, its access and pipeline, Uintah-Ouray Ute Reservation, Duchesne county, Utah. Report prepared under Utah project U-01-AY-0058(i) for Barrett Res. Corp. by AIA. Report on file at AIA office Laramie, Wyoming.

BERRY PETROLEUM COMPANY

UTE TRIBAL #13-14-55

LOCATED IN DUCHESNE COUNTY, UTAH
SECTION 14, T5S, R5W, U.S.B.&M.

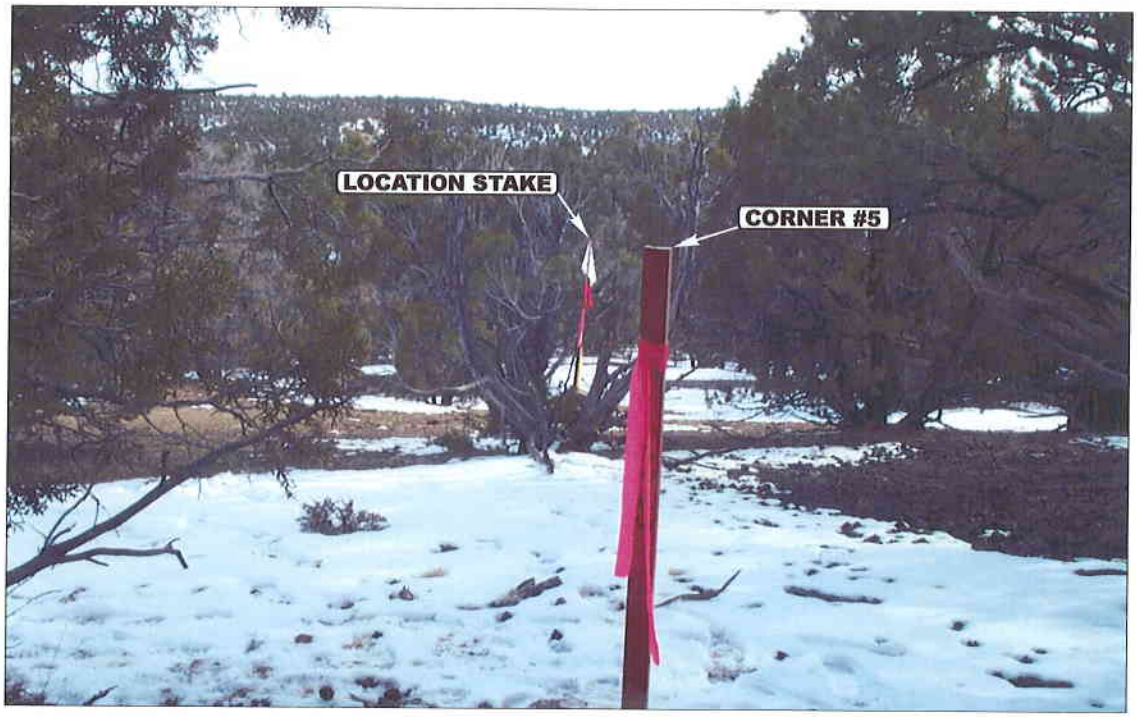

PHOTO: VIEW FROM CORNER #5 TO LOCATION STAKE **CAMERA ANGLE: SOUTHEASTERLY**

PHOTO: VIEW FROM BEGINNING OF PROPOSED ACCESS **CAMERA ANGLE: NORTHEASTERLY**

- Since 1964 -

Uintah Engineering & Land Surveying
85 South 200 East Vernal, Utah 84078
435-789-1017 uels@uelsinc.com

LOCATION PHOTOS	12 MONTH	11 DAY	02 YEAR	PHOTO
TAKEN BY: S.H.	DRAWN BY: P.M.	REVISED: 00-00-00		

BERRY PETROLEUM COMPANY

LOCATION LAYOUT FOR

UTE TRIBAL #13-14-55
SECTION 14, T5S, R5W, U.S.B.&M.
744' FSL 569' FWL

REGISTERED LAND SURVEYOR
No. 161319
ROBERT L. KAY
STATE OF UTAH

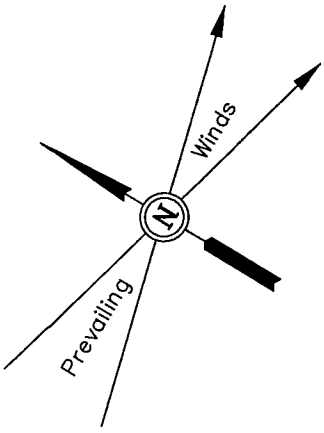

SCALE: 1" = 50'
DATE: 12-09-03
DRAWN BY: D.R.B.

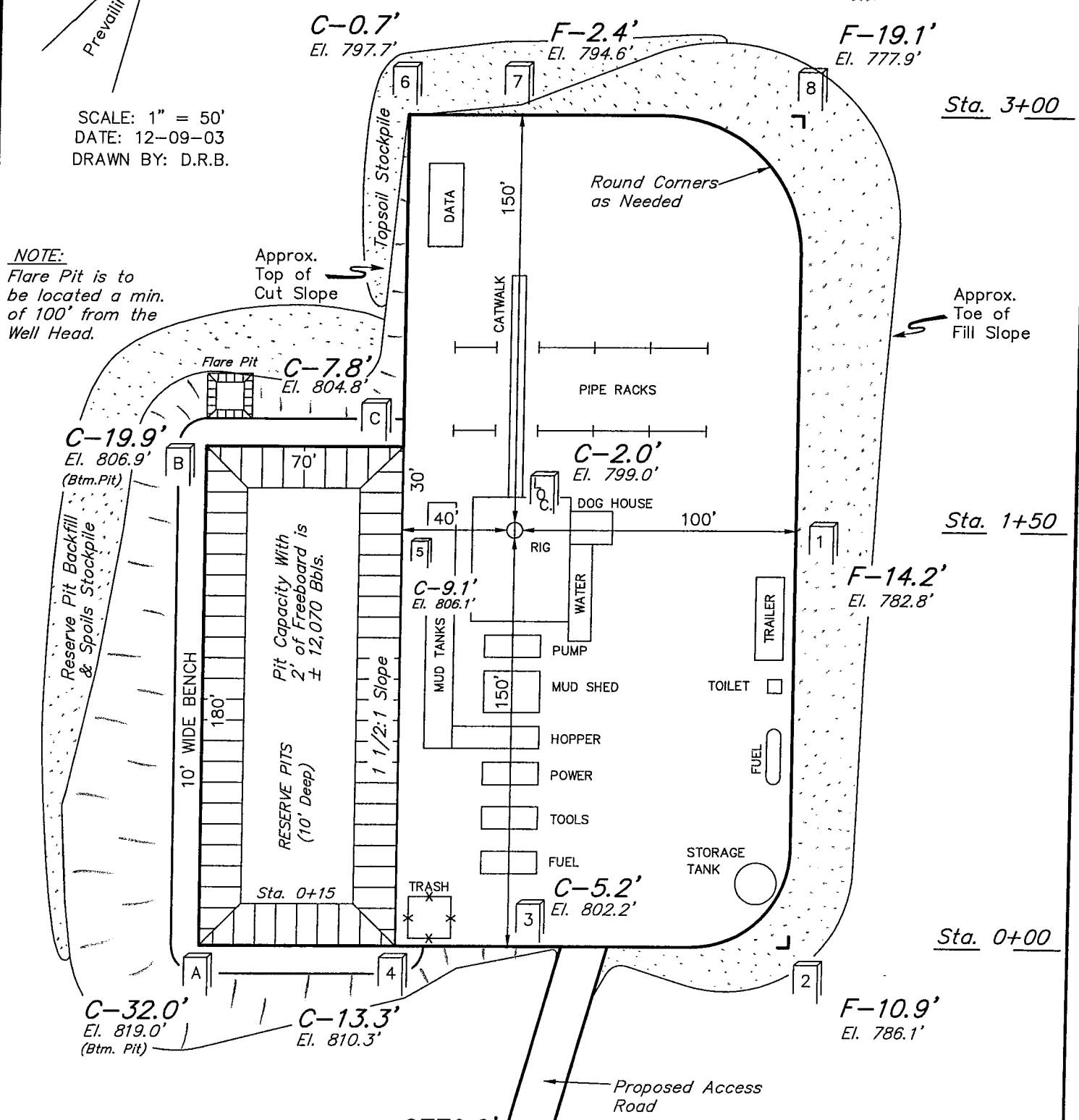

Elev. Ungraded Ground at Location Stake = 6779.0'

Elev. Graded Ground at Location Stake = 6797.0'

UINTAH ENGINEERING & LAND SURVEYING
85 So. 200 East * Vernal, Utah 84078 * (435) 789-1017

BERRY PETROLEUM COMPANY

TYPICAL CROSS SECTIONS FOR

UTE TRIBAL #13-14-55
SECTION 14, T5S, R5W, U.S.B.&M.
744' FSL 569' FWL

REGISTERED LAND SURVEYOR No. 161319 ROBERT L. KAY STATE OF UTAH

1" = 20' X-Section Scale
1" = 50'

DATE: 12-09-03
DRAWN BY: D.R.B.

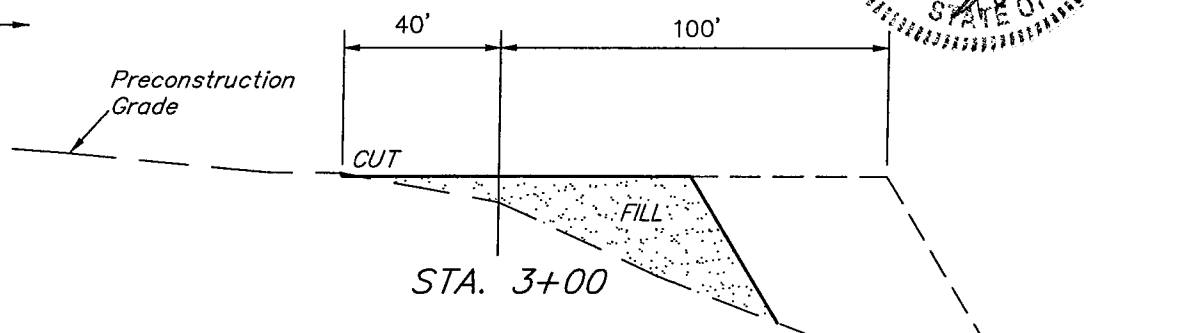

STA. 3+00

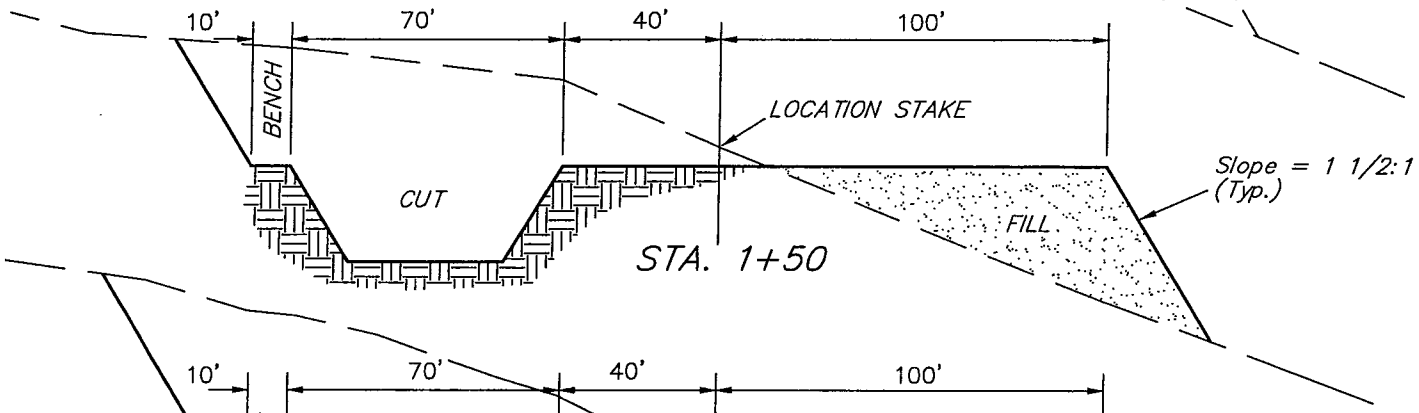

STA. 1+50

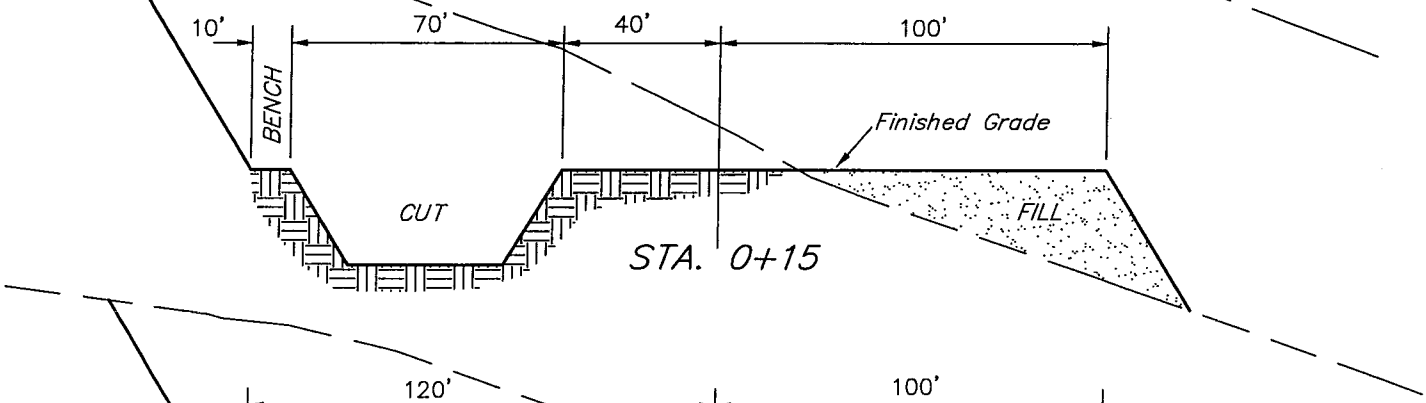

STA. 0+15

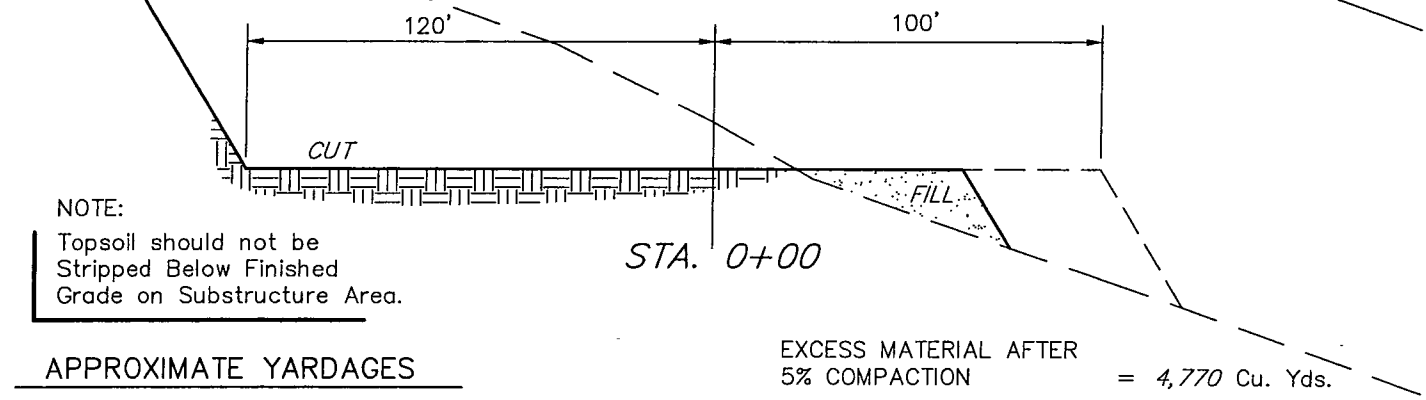

STA. 0+00

NOTE:
Topsoil should not be Stripped Below Finished Grade on Substructure Area.

APPROXIMATE YARDAGES

CUT
(12") Topsoil Stripping = *2,080* Cu. Yds.
Remaining Location = *15,440* Cu. Yds.

TOTAL CUT = *17,520* CU.YDS.
FILL = *12,110* CU.YDS.

EXCESS MATERIAL AFTER 5% COMPACTION = *4,770* Cu. Yds.
Topsoil & Pit Backfill (1/2 Pit Vol.) = *3,770* Cu. Yds.
EXCESS UNBALANCE (After Rehabilitation) = *1,000* Cu. Yds.

UINTAH ENGINEERING & LAND SURVEYING
*85 So. 200 East * Vernal, Utah 84078 * (435) 789-1017*

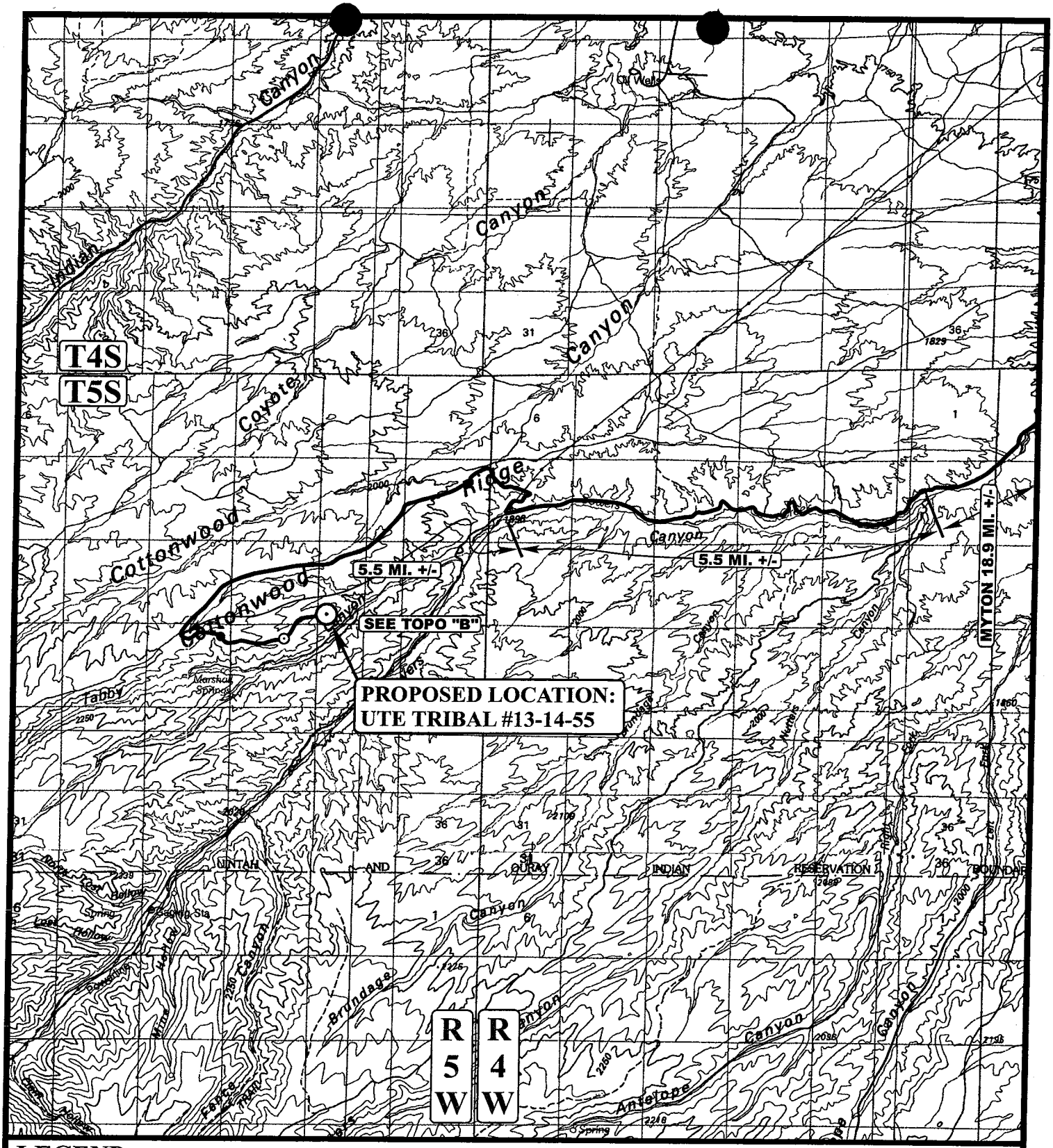

LEGEND:

⊙ PROPOSED LOCATION

N

BERRY PETROLEUM COMPANY

UTE TRIBAL #13-14-55
SECTION 14, T5S, R5W, U.S.B.&M.
744' FSL 569' FWL

UELS
Uintah Engineering & Land Surveying
85 South 200 East Vernal, Utah 84078
(435) 789-1017 * FAX (435) 789-1813

TOPOGRAPHIC MAP	12 MONTH	11 DAY	03 YEAR	A TOPO
SCALE: 1:100,000	DRAWN BY: P.M.	REVISED: 05-06-04		

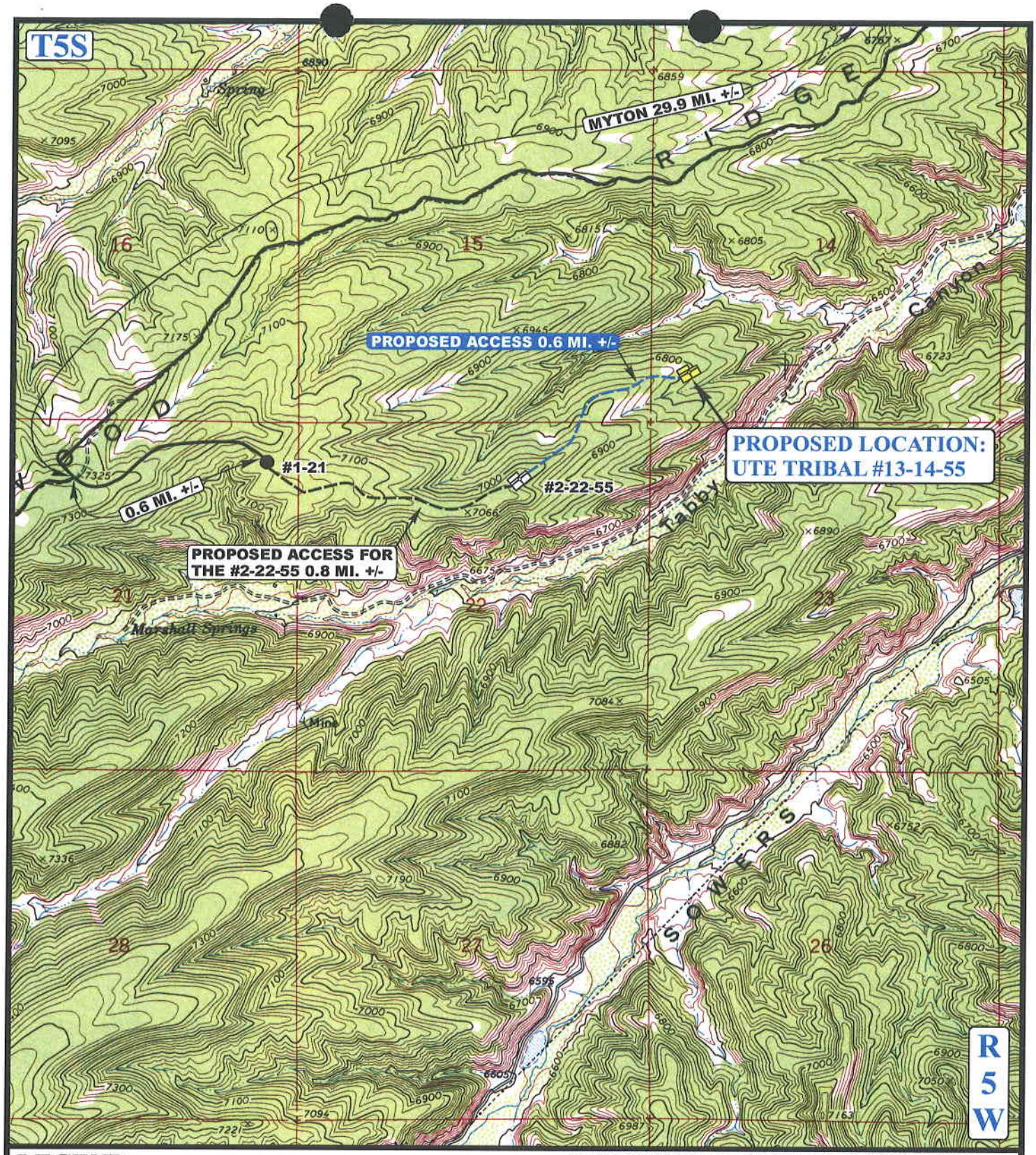

LEGEND:

EXISTING ROAD

PROPOSED ACCESS ROAD

N

BERRY PETROLEUM COMPANY

UTE TRIBAL #13-14-55
SECTION 14, T5S, R5W, U.S.B.&M.
744' FSL 569' FWL

Uintah Engineering & Land Surveying
85 South 200 East Vernal, Utah 84078
(435) 789-1017 * FAX (435) 789-1813

TOPOGRAPHIC MAP	12 MONTH	11 DAY	03 YEAR	B TOPO
SCALE: 1" = 2000'	DRAWN BY: P.M.	REVISED: 05-06-04		

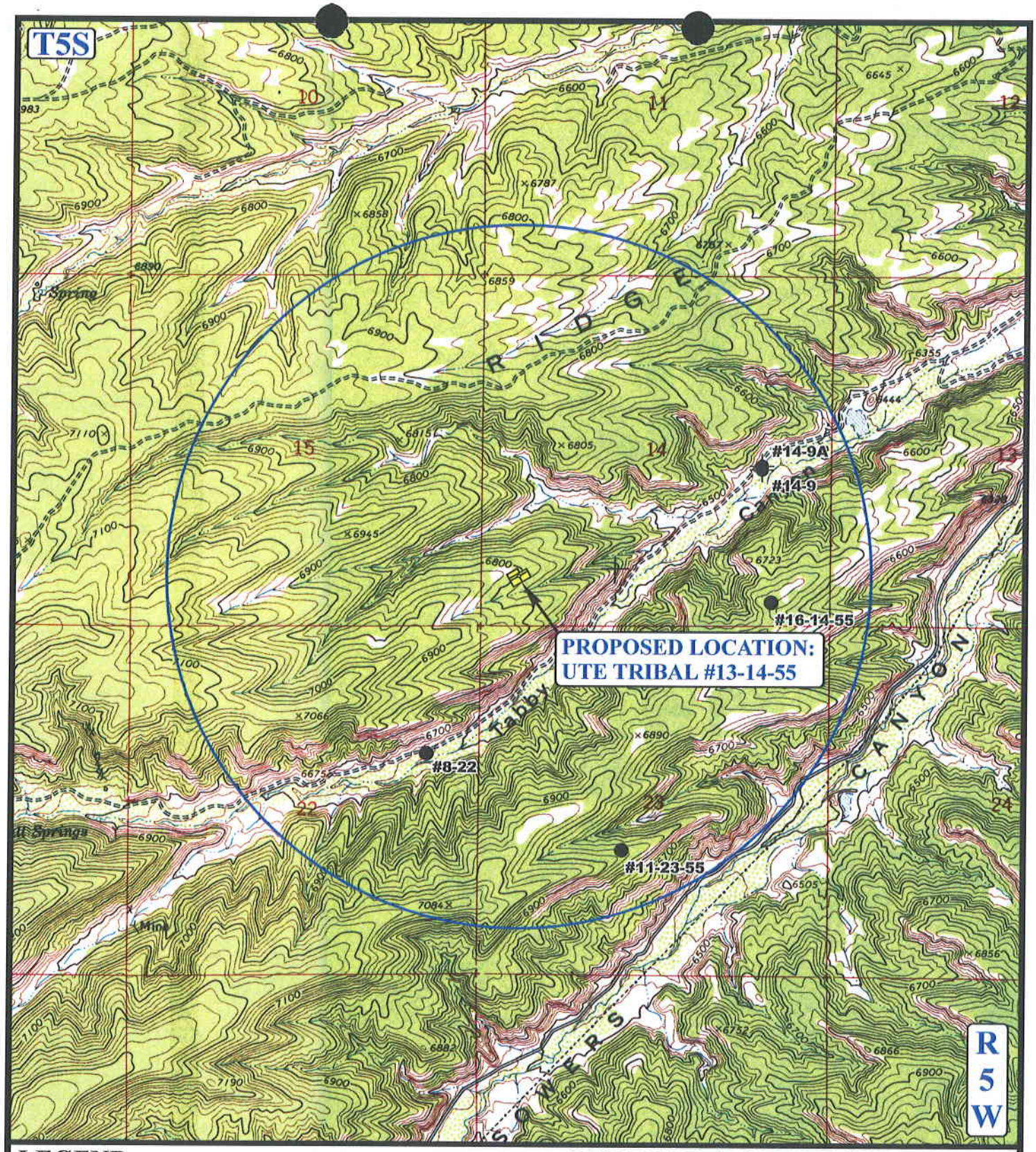

LEGEND:

- DISPOSAL WELLS
- PRODUCING WELLS
- SHUT IN WELLS
- WATER WELLS
- ABANDONED WELLS
- TEMPORARILY ABANDONED

N

BERRY PETROLEUM COMPANY

UTE TRIBAL #13-14-55
SECTION 14, T5S, R5W, U.S.B.&M.
744' FSL 569' FWL

UELS
Uintah Engineering & Land Surveying
85 South 200 East Vernal, Utah 84078
(435) 789-1017 * FAX (435) 789-1813

TOPOGRAPHIC MAP	12 MONTH	11 DAY	03 YEAR	C TOPO
SCALE: 1" = 2000'	DRAWN BY: P.M.	REVISED: 00-00-00		

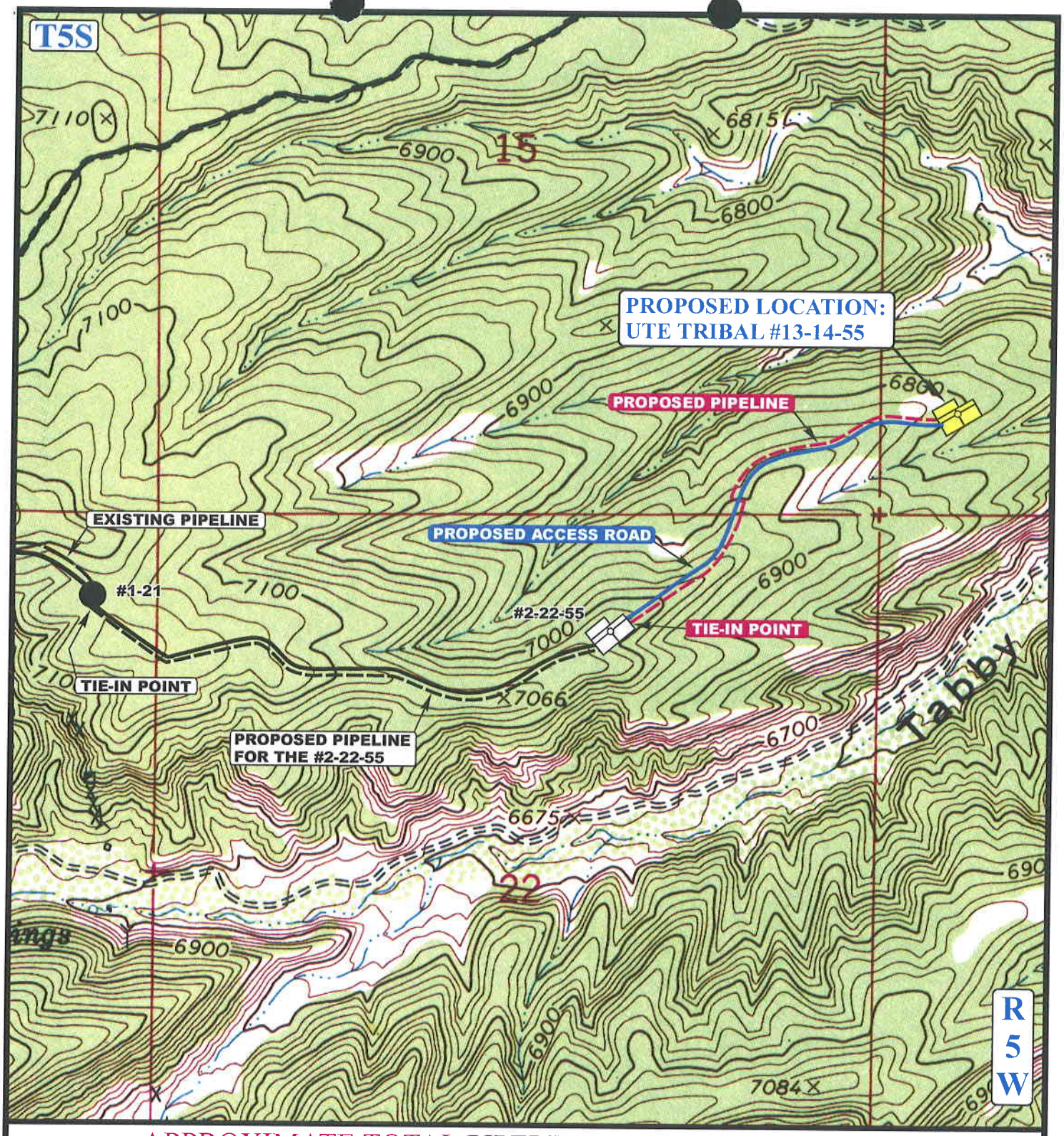

APPROXIMATE TOTAL PIPELINE DISTANCE = 3,100' +/-

LEGEND:

PROPOSED ACCESS ROAD
EXISTING PIPELINE
PROPOSED PIPELINE

N

BERRY PETROLEUM COMPANY

UTE TRIBAL #13-14-55
SECTION 14, T5S, R5W, U.S.B.&M.
744' FSL 569' FWL

UELS
Uintah Engineering & Land Surveying
85 South 200 East Vernal, Utah 84078
(435) 789-1017 * FAX (435) 789-1813

TOPOGRAPHIC MAP	12 MONTH	11 DAY	03 YEAR	D TOPO
SCALE: 1" = 1000'	DRAWN BY: P.M.	REVISED: 05-06-04		

004

WORKSHEET
APPLICATION FOR PERMIT TO DRILL

APD RECEIVED: 06/04/2004

API NO. ASSIGNED: 43-013-32600

WELL NAME: UTE TRIBAL 13-14-55

OPERATOR: BERRY PETROLEUM COMPANY (N2480)

CONTACT: DEBBIE WISENER

PHONE NUMBER: 435-722-1325

PROPOSED LOCATION:

SWSW 14 050S 050W

SURFACE: 0744 FSL 0569 FWL

BOTTOM: 0744 FSL 0569 FWL

DUCHESNE

BRUNDAGE CANYON (72)

LEASE TYPE: 2 - Indian

LEASE NUMBER: 14-20-H62-5016

SURFACE OWNER: 2 - Indian

PROPOSED FORMATION: GRRV

COALBED METHANE WELL? NO

INSPECT LOCATN BY: / /

Tech Review	Initials	Date
Engineering		
Geology		
Surface		

LATITUDE: 40.04136

LONGITUDE: 110.42177

RECEIVED AND/OR REVIEWED:

✓ Plat

✓ Bond: Fed[] Ind[2] Sta[] Fee[]
(No. RLB0005651)

N Potash (Y/N)

N Oil Shale 190-5 (B) or 190-3 or 190-13

✓ Water Permit
(No. 43-11041)

N RDCC Review (Y/N)
(Date:)

Nn Fee Surf Agreement (Y/N)

LOCATION AND SITING:

___ R649-2-3.

Unit ___

✓ R649-3-2. General
Siting: 460 From Qtr/Qtr & 920' Between Wells

___ R649-3-3. Exception

___ Drilling Unit
Board Cause No: ___
Eff Date: ___
Siting: ___

___ R649-3-11. Directional Drill

COMMENTS: Stop, Separate file

STIPULATIONS: 1- Federal Approval
2- Spacing Stip

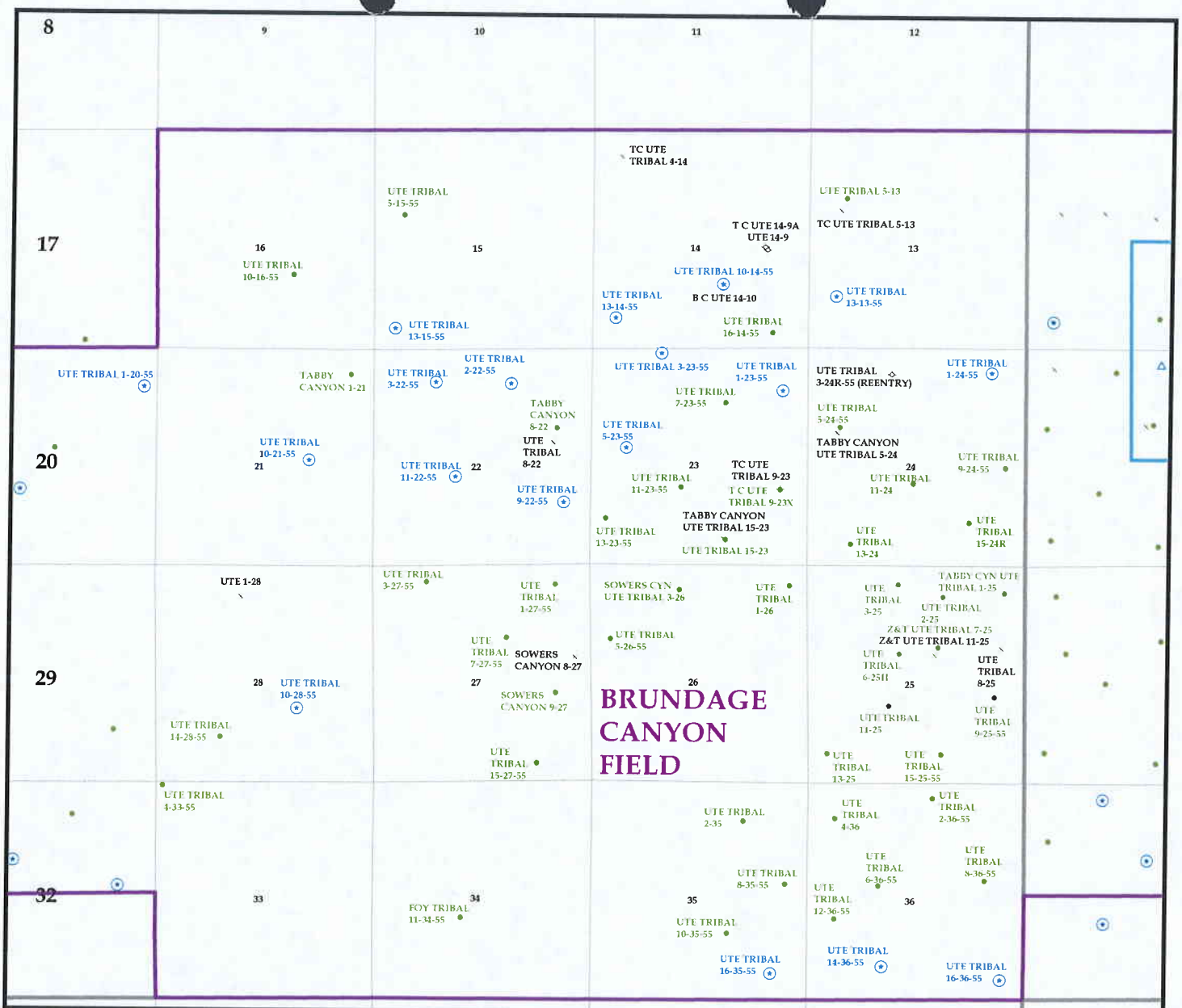

OPERATOR: BERRY PETROLEUM CO (N2480)

SEC. 14 T.5S, R.5W

FIELD: BRUNDAGE CANYON (72)

COUNTY: DUCHESNE

SPACING: R649-3-2 / GENERAL SITING

Well Status

- GAS INJECTION
- GAS STORAGE
- LOCATION ABANDONED
- NEW LOCATION
- PLUGGED & ABANDONED
- PRODUCING GAS
- PRODUCING OIL
- SHUT-IN GAS
- SHUT-IN OIL
- TEMP. ABANDONED
- TEST WELL
- WATER INJECTION
- WATER SUPPLY
- WATER DISPOSAL

Land Status

- Private Not Classed
- Forest Service
- BLM
- State Lands
- Native American
- Private
- Military
- National Parks
- State Parks
- State Wilderness
- National Recreation
- US Wildlife
- Wilderness
- Bankhead Jones
- Soveriegn Lands
- Water
- Intermittent Water
- Section Line
- Township Boundary

Utah Oil Gas and Mining

N
W E
S

PREPARED BY: DIANA WHITNEY
DATE: 8-JUNE-2004

State of Utah

Department of
Natural Resources

ROBERT L. MORGAN
Executive Director

Division of
Oil, Gas & Mining

LOWELL P. BRAXTON
Division Director

OLENE S. WALKER
Governor

GAYLE F. McKEACHNIE
Lieutenant Governor

June 7, 2004

Berry Petroleum Company
Rt. 3, Box 3020
Roosevelt, UT 84066

Re: Ute Tribal 13-14-55 Well, 744' FSL, 569' FWL, SW SW, Sec. 14, T. 5 South, R. 5 West, Duchesne County, Utah

Gentlemen:

Pursuant to the provisions and requirements of Utah Code Ann.§ 40-6-1 *et seq.*, Utah Administrative Code R649-3-1 *et seq.*, and the attached Conditions of Approval, approval to drill the referenced well is granted.

This approval shall expire one year from the above date unless substantial and continuous operation is underway, or a request for extension is made prior to the expiration date. The API identification number assigned to this well is 43-013-32600.

Sincerely,

for John R. Baza
Associate Director

pab
Enclosures

cc: Duchesne County Assessor
Bureau of Land Management, Vernal District Office

Operator: Berry Petroleum Company
Well Name & Number Ute Tribal 13-14-55
API Number: 43-013-32600
Lease: 14-20-H62-5016

Location: SW SW **Sec.** 14 **T.** 5 South **R.** 5 West

Conditions of Approval

1. General
   Compliance with the requirements of Utah Admin. R. 649-1 *et seq.*, the Oil and Gas Conservation General Rules, and the applicable terms and provisions of the approved Application for permit to drill.

2. Notification Requirements
   Notify the Division within 24 hours of spudding the well.
   - Contact Carol Daniels at (801) 538-5284.

   Notify the Division prior to commencing operations to plug and abandon the well.
   - Contact Dan Jarvis at (801) 538-5338

3. Reporting Requirements
   All required reports, forms and submittals will be promptly filed with the Division, including but not limited to the Entity Action Form (Form 6), Report of Water Encountered During Drilling (Form 7), Weekly Progress Reports for drilling and completion operations, and Sundry Notices and Reports on Wells requesting approval of change of plans or other operational actions.

4. State approval of this well does not supersede the required federal approval, which must be obtained prior to drilling.

5. This proposed well is located in an area for which drilling units (well spacing patterns) have not been established through an order of the Board of Oil, Gas and Mining (the "Board"). In order to avoid the possibility of waste or injury to correlative rights, the operator is requested, once the well has been drilled, completed, and has produced, to analyze geological and engineering data generated therefrom, as well as any similar data from surrounding areas if available. As soon as is practicable after completion of its analysis, and if the analysis suggests an area larger than the quarter-quarter section upon which the well is located is being drained, the operator is requested to seek an appropriate order from the Board establishing drilling and spacing units in conformance with such analysis by filing a Request for Agency Action with the Board.

FORM 6

STATE OF UTAH
DEPARTMENT OF NATURAL RESOURCES
DIVISION OF OIL, GAS AND MINING

007

ENTITY ACTION FORM

Operator: Berry Petroleum
Address: 410 17th St Suite 2440
city Denver
state CO zip 80202

Operator Account Number: N 2480
Phone Number: (303) 825-3344

Well 1

API Number	Well Name	QQ	Sec	Twp	Rng	County
013-32551	Williamson Tribal 5-34-54	SWNW	34	5	4	Duchesne

Action Code	Current Entity Number	New Entity Number	Spud Date	Entity Assignment Effective Date
A	99999	14235	7/20/2004	7/29/04

Comments: GRRU

C K

Well 2

API Number	Well Name	QQ	Sec	Twp	Rng	County
013-32600	Ute Tribal 13-14-55	SWSW	14	5	5	Duchesne

Action Code	Current Entity Number	New Entity Number	Spud Date	Entity Assignment Effective Date
A	99999	14236	7/28/2004	7/29/04

Comments: GRRU

C K

Well 3

API Number	Well Name	QQ	Sec	Twp	Rng	County

Action Code	Current Entity Number	New Entity Number	Spud Date	Entity Assignment Effective Date

Comments:

ACTION CODES:

- A - Establish new entity for new well (single well only)
- B - Add new well to existing entity (group or unit well)
- C - Re-assign well from one existing entity to another existing entity
- D - Re-assign well from one existing entity to a new entity
- E - Other (Explain in 'comments' section)

Rich Haefele
Name (Please Print)

Signature

Engineering Technician
Title

7/28/2004
Date

(5/2000)

RECEIVED
JUN 28 2004
DIV. OF OIL, GAS & MINING

Form 3160-3
(November 1983)
(formerly 9-331C)

SUBMIT IN TRIPLICATE*
(Other instructions on reverse side)

Form approved.
Budget Bureau No. 1004-0136
Expires December 31, 1988

006

UNITED STATES
DEPARTMENT OF THE INTERIOR
BUREAU OF LAND MANAGEMENT

APPLICATION FOR PERMIT TO DRILL, DEEPEN, OR PLUG BACK

5. LEASE DESIGNATION AND SERIAL NO.: 14-20-H62-5016

6. IF INDIAN, ALLOTTEE OR TRIBE NAME: UTE

7. UNIT AGREEMENT NAME:

8. FARM OR LEASE NAME: UTE TRIBAL

9. WELL NO.: 13-14-55

10. FIELD AND POOL, OR WILDCAT: BRUNDAGE CANYON

11. SEC., T., R., M., OR BLK, AND SURVEY OR AREA: SEC. 14, T.5S., R.5W.

1a. TYPE OF WORK: DRILL [X] DEEPEN [ ] PLUG BACK [ ]

b. TYPE OF WELL: Oil well [X] Gas well [ ] OTHER Single zone [X] Multiple zone [ ]

2. NAME OF OPERATOR: BERRY PETROLEUM COMPANY

MAY 25 2004

3. ADDRESS OF OPERATOR: 1614 SOUTH 2000 WEST, RT. 3 BOX 3020, ROOSEVELT, UT. 84066

4. LOCATION OF WELL (Report location clearly and in accordance with any State requirements.*)
At surface: (SW/SW) 744' FSL, 569' FWL — 40.041311 LAT, 110.422528 LONG
At proposed prod. zone: SAME AS ABOVE

14. DISTANCE IN MILES AND DIRECTION FROM NEAREST TOWN OR POST OFFICE*: 31.9 MILES FROM MYTON, UTAH 43-013-32600

12. COUNTY OR PARISH: DUCHESNE

13. STATE: UTAH

15. DISTANCE FROM PROPOSED* LOCATION TO NEAREST PROPERTY OR LEASE LINE, FT. (Also to nearest drlg. unit line, if any): 569'

16. NO. OF ACRES IN LEASE: 640

17. NO OF ACRES ASSIGNED TO THIS WELL: 40

18. DISTANCE FROM PROPOSED LOCATION* TO NEAREST WELL, DRILLING, COMPLETED OR APPLIED FOR, ON THIS LEASE. FT.: 2747'

19. PROPOSED DEPTH: 5967'

20. ROTARY OR CABLE TOOLS: ROTARY

21. ELEVATIONS (Show whether DF, RT, GR, etc.): 6797' GR

22. APPROX. DATE WORK WILL START*: REFER TO BPC SOP PLAN

23. PROPOSED CASING AND CEMENTING PROGRAM

SIZE OF HOLE	SIZE OF CASING	WEIGHT PER FOOT	SETTING DEPTH	QUANTITY OF CEMENT
REFER TO BERRY PETROLEUM COMPANY SOP'S DRILLING PROGRAM/CASING DESIGN				

OPERATOR REQUESTS PERMISSION TO DRILL THE SUBJECT WELL. PLEASE SEE THE ATTACHED CONDITIONS FOR APPROVAL.

RECEIVED
JUL 19 2004
DIV. OF OIL, GAS & MINING

IF YOU REQUIRE ADDITIONAL INFORMATION PLEASE CONTACT:

EDDY COURTRIGHT
1614 SOUTH 2000 WEST
RT. 3 BOX 3020
ROOSEVELT, UTAH 84066

BOND # UTB000035

OFFICE: (435)722-1325 CELLULAR: (435)823-1862

PLEASE KEEP THIS INFORMATION ON THIS WELL **CONFIDENTIAL**

IN ABOVE SPACE DESCRIBE PROPOSED PROGRAM: If proposal is to deepen or plug back, give data on present productive zone and proposed new productive zone. If proposal is to drill or deepen directionally, give pertinent data on subsurface locations and measured and true vertical depths. Give blowout preventer program, if any.

24. SIGNED [signature] TITLE Production & Regulatory Technician DATE 05/25/04

(This space for Federal or State office use)

PERMIT NO. APPROVAL DATE **NOTICE OF APPROVAL**

APPROVED BY [signature] TITLE Assistant Field Manager ~~Mineral Resources~~ DATE 07/13/2004

CONDITIONS OF APPROVAL IF ANY

*See Instructions On Reverse Side

Title 18 U.S.C. Section 1001, makes it a crime for any person knowingly and willfully to make to any department or agency of the United States and false, fictitious or fraudulent statements or representations as to any matter within its jurisdiction.

CONDITIONS OF APPROVAL ATTACHED

04PS1608T

CONDITIONS OF APPROVAL
APPLICATION FOR PERMIT TO DRILL

Company/Operator: Berry Petroleum Company

Well Name & Number: Ute Tribal 13-14-55

API Number: 43-013-32600

Lease Number: 14-20-H62-5016

Location: SWSW, Sec. 14 T.5S R.5W

Agreement: N/A

For more specific details on notification requirements, please check the Conditions of Approval for Notice to Drill and Surface Use Program.

CONDITIONS OF APPROVAL

Approval of this application does not warrant or certify that the applicant holds legal or equitable title to those rights in the subject lease which would entitle the applicant to conduct operations thereon.

Be aware fire restrictions may be in effect when location is being constructed and/or when well is being drilled. Contact the appropriate Surface Management Agency for information.

DRILLING PROGRAM

1. Estimated Depth at Which Oil, Gas, Water, or Other Mineral Bearing Zones are Expected to be Encountered

Report ALL water shows and water-bearing sands to John Mayers of this office **prior to setting the next casing string or requesting plugging orders**. Faxed copies of State of Utah form OGC-8-X are acceptable. If noticeable water flows are detected, submit samples to this office along with any water analyses conducted.

All usable water and prospectively valuable minerals (as described by BLM at onsite) encountered during drilling, will be recorded by depth and adequately protected. All oil and gas shows will be tested to determine commercial potential.

2. Pressure Control Equipment

The BOP and related equipment shall meet the minimum requirements of Onshore Oil and Gas Order No. 2 for equipment and testing requirements, procedures, etc., for a **2M** system and individual components shall be operable as designed.

3. Casing Program and Auxiliary Equipment

As a minimum requirement, the cement behind the production casing must extend 200' above the top of the Green River Formation identified at ±2704'.

4. Coring, Logging and Testing Program

A cement bond log (CBL) will be run from the production casing shoe to the surface casing shoe and shall be utilized to determine the bond quality for the production casing

Please submit to this office, in LAS format, an electronic copy of all logs run on this well. This submission will replace the requirement for submittal of paper logs to the BLM.

5. Notifications of Operations

Daily drilling and completion progress reports shall be submitted to this office on a weekly basis.

6. Other Information

All loading lines will be placed inside the berm surrounding the tank battery.
All off-lease storage, off-lease measurement, or commingling onlease or off-lease will have prior written approval from the AO.

In the event after-hours approvals are necessary, you must contact one of the following individuals:

Ed Forsman (435) 828-7874
Petroleum Engineer

Kirk Fleetwood (435) 828-7875
Petroleum Engineer

BLM FAX Machine (435) 781-4410

EPA'S LIST OF NONEXEMPT EXPLORATION AND PRODUCTION WASTES

While the following wastes are nonexempt, they are not necessarily hazardous.

Unused fracturing fluids or acids

Gas plant cooling tower cleaning wastes

Painting wastes

Oil and gas service company wastes, such as empty drums, drum rinsate, vacuum truck rinsate, sandblast media, painting wastes, spend solvents, spilled chemicals, and waste acids

Vacuum truck and drum rinsate from trucks and drums, transporting or containing nonexempt waste

Refinery wastes

Liquid and solid wastes generated by crude oil and tank bottom reclaimers

Used equipment lubrication oils

Waste compressor oil, filters, and blowdown

Used hydraulic fluids

Waste solvents

Waste in transportation pipeline-related pits

Caustic or acid cleaners

Boiler cleaning wastes

Boiler refractory bricks

Incinerator ash

Laboratory wastes

Sanitary wastes

Pesticide wastes

Radioactive tracer wastes

Drums, insulation and miscellaneous solids.

SURFACE USE PROGRAM
CONDITIONS OF APPROVAL (COAs)

Berry Petroleum Company (Berry) will assure the Ute Tribe that any/all contractors and subcontractors have acquired a current Tribal Business License and have updated "Access Permits" prior to construction. All Berry personnel, contractors and subcontractors will have these permits in their vehicles at all times. Companies that have not complied with this COA will be in violation of the Ute Tribal Business License Ordinance, and will be subject to fines and penalties.

Berry employees, representatives, and/or authorized personnel (subcontractors) shall not carry firearms on their person or in their vehicles while working on the Uintah and Ouray Indian Reservation.

Berry employees and/or authorized personnel (subcontractors) in the field will have approved applicable APDs and/or ROW permits/authorizations on their person(s) during all phases of construction.

Berry will notify the Ute Tribe and Bureau of Indian Affairs (BIA) in writing of any requested modification of APDs or Rights-Of Way (ROW). Berry shall receive written notification of authorization or denial of the requested modification. Without authorization, Berry will be subject to fines and penalties.

The Ute Tribe Energy & Minerals Department shall be notified in writing 48 hours in advance of any construction activity. The Ute Tribal office is open Monday through Thursday. A Tribal Technician is to routinely monitor construction. Berry shall make arrangements with the Ute Energy & Minerals Department for all monitoring that will exceed regular working hours for Tribal Technicians. A qualified Archaeologist accompanied by a Tribal Technician will monitor any trenching construction involved in the pipeline construction. Berry is to inform the contractors to maintain construction of the pipelines within the approved right of ways.

A corridor ROW, 30 feet wide and 2681 feet long, shall be granted for the pipeline and for the new access road. The constructed travel width of the new access road shall be limited to 18 feet. Upon authorization by the Ute Tribe Energy & Minerals Department, the ROW may be wider where sharp curves; deep cuts and fills occur; or, where intersections with other roads are required.

Culverts and diversion ditches will be placed and constructed where needed.

Upon completion of the pertinent APD and ROW construction, Berry will notify the Ute Tribe Energy & Minerals Department for a Tribal Technician to verify the Affidavit of Completion.

Production waters, oil, and other byproducts shall not be placed on access roads or the well pad.

All vehicular traffic, personnel movement, construction and restoration operations will be confined to the areas examined and approved and to the existing roadways and/or evaluated access routes.

Berry will implement "Safety and Emergency Plan" and ensure plan compliance.

Berry shall stop construction activities and notify personnel from the Ute Tribe Energy & Minerals Department and BIA if cultural remains including paleontology resources (vertebrate fossils) are exposed or identified during construction. The Ute Tribe Department of Cultural Rights and Protection and the BIA will provide mitigation measures prior to allowing construction.

Berry employees and/or authorized personnel (subcontractors) will not be allowed to collect artifacts and paleontology fossils. No significant cultural resources shall be disturbed.

Berry will control noxious weeds on the well site and ROWs. Berry will be responsible for noxious weed control if weeds spread from the project area onto adjoining land.

Reserve pits will be lined with an impervious synthetic liner. A fence will be constructed around the reserve pit until it is backfilled. Prior to backfilling the reserve pit, all fluids will be pumped from the pit into trucks and hauled to approved disposal sites or shall be used to drill other wells. When the reserve pits are backfilled, the pit liner remnants, the surplus oil and mud, etc., will be buried a minimum of 3.0 feet below the surface of the soil.

A closed system will be used during production. This means that production fluids will be contained in leak-proof tanks. All production fluids will be disposed of at approved disposal sites.

Surface pipelines will be constructed to lay on the soil surface. The pipeline ROW will not be bladed or cleared of vegetation without authorization of the BIA. Surface pipelines shall be welded in place at well sites or on access roads and on other existing roads then pulled into place with suitable equipment. The pipeline portion of the ROW will not be bladed or cleared of vegetation without authorization of the BIA.

Buried pipelines shall be buried a minimum of 3 feet below the soil surface. After construction is completed the disturbed area shall be contoured to blend into the natural landscape and be reseeded between September 15 and November 1 of the year following construction with perennial vegetation seed mixture provided by the BIA or Ute Tribe.

Before the site is abandoned, Berry will be required to restore the well site and ROWs to near their original state. The disturbed areas will be reseeded with desirable perennial vegetation.

Soil erosion will be mitigated, by reseeding all areas of disturbance.

Form 3160-5
(April 2004)

UNITED STATES
DEPARTMENT OF THE INTERIOR
BUREAU OF LAND MANAGEMENT

FORM APPROVED
OM B No. 1004-0137
Expires: March 31, 2007

SUNDRY NOTICES AND REPORTS ON WELLS

Do not use this form for proposals to drill or to re-enter an abandoned well. Use Form 3160 - 3 (APD) for such proposals.

008

SUBMIT IN TRIPLICATE- Other instructions on reverse side.

5. Lease Serial No.
14-20-H62-5016

6. If Indian, Allottee or Tribe Name
Ute

7. If Unit or CA/Agreement, Name and/or No.

1. Type of Well
☑ Oil Well ☐ Gas Well ☐ Other

8. Well Name and No.
Ute Tribal 13-14-55

2. Name of Operator **Berry Petroleum Company**

9. API Well No.
43-013-32600

3a. Address
410 17th Street Suite 2440 Denver, CO 80202

3b. Phone No. *(include area code)*
303 825-3344

10. Field and Pool, or Exploratory Area
Brundage Canyon

4. Location of Well *(Footage, Sec., T., R., M., or Survey Description)*

744' FSL x 569' FWL (SWSW), Section 14, Township 5 South, Range 5 West
40.041311 Lat, 110.422528 Long

11. County or Parish, State
Duchesne County, Utah

12. CHECK APPROPRIATE BOX(ES) TO INDICATE NATURE OF NOTICE, REPORT, OR OTHER DATA

TYPE OF SUBMISSION	TYPE OF ACTION			
☐ Notice of Intent	☐ Acidize	☐ Deepen	☐ Production (Start/Resume)	☐ Water Shut-Off
☑ Subsequent Report	☐ Alter Casing	☐ Fracture Treat	☐ Reclamation	☐ Well Integrity
☐ Final Abandonment Notice	☐ Casing Repair	☐ New Construction	☐ Recomplete	☐ Other **Notice of Spud**
	☐ Change Plans	☐ Plug and Abandon	☐ Temporarily Abandon	
	☐ Convert to Injection	☐ Plug Back	☐ Water Disposal	

13. Describe Proposed or Completed Operation (clearly state all pertinent details, including estimated starting date of any proposed work and approximate duration thereof. If the proposal is to deepen directionally or recomplete horizontally, give subsurface locations and measured and true vertical depths of all pertinent markers and zones. Attach the Bond under which the work will be performed or provide the Bond No. on file with BLM/BIA. Required subsequent reports shall be filed within 30 days following completion of the involved operations. If the operation results in a multiple completion or recompletion in a new interval, a Form 3160-4 shall be filed once testing has been completed. Final Abandonment Notices shall be filed only after all requirements, including reclamation, have been completed, and the operator has determined that the site is ready for final inspection.)

Please be advised that the Ute Tribal 13-14-55 was Spud on 7-28-~~54~~ 2004 @ 1030 hours.

RECEIVED
AUG 0 2 2004
DIV. OF OIL, GAS & MINING

14. I hereby certify that the foregoing is true and correct
Name *(Printed/Typed)* **Richard A. Haefele** Title **Technician**

Signature Date **07/28/2004**

THIS SPACE FOR FEDERAL OR STATE OFFICE USE

Approved by Title Date

Conditions of approval, if any, are attached. Approval of this notice does not warrant or certify that the applicant holds legal or equitable title to those rights in the subject lease which would entitle the applicant to conduct operations thereon. Office

Title 18 U.S.C. Section 1001 and Title 43 U.S.C. Section 1212, make it a crime for any person knowingly and willfully to make to any department or agency of the United States any false, fictitious or fraudulent statements or representations as to any matter within its jurisdiction.

(Instructions on page 2)

pason
systems usa corp

www.pason.com
16100 Table Mountain Parkway Ste 100 • Golden • CO • 80403
720-880-2000 • FAX: 720-880-0016

009

August 16, 2004

Oil & Gas Supervisor
Utah Division Of Oil, Gas, & Mining
1594 W. North Temple
Suite 1210
Salt Lake City, UT 84116

RE: BERRY PETROLEUM CO.
UTE TRIBAL 13-14-55
SEC. 14, T5S, R5W
DUCHESNE COUNTY, UT

API# 43-013-32600

Dear Oil & Gas Supervisor:

Enclosed is the final computer colored log for the above referenced well.

We appreciate the opportunity to be of service to you and look forward to working with you again in the near future.

If you have any questions regarding the enclosed data, please contact us.

Sincerely,

Bill Nagel
Geology Manager
Pason Systems USA
BN/alb

Encl: 1 Final Computer Colored Log.

Cc: Bruce Kelso, Berry Petroleum Co., Denver, CO.

RECEIVED
AUG 18 2004
DIV. OF OIL, GAS & MINING

Form 3160-5
(April 2004)

UNITED STATES
DEPARTMENT OF THE INTERIOR
BUREAU OF LAND MANAGEMENT

FORM APPROVED
OM B No. 1004-0137
Expires: March 31, 2007

SUNDRY NOTICES AND REPORTS ON WELLS

010

Do not use this form for proposals to drill or to re-enter an abandoned well. Use Form 3160 - 3 (APD) for such proposals.

SUBMIT IN TRIPLICATE- Other instructions on reverse side.

5. Lease Serial No.
14-20-H62-5016

6. If Indian, Allottee or Tribe Name
Ute

7. If Unit or CA/Agreement, Name and/or No.

1. Type of Well
☑ Oil Well ☐ Gas Well ☐ Other

8. Well Name and No.
Ute Tribal 13-14-55

2. Name of Operator **Berry Petroleum Company**

9. API Well No.
43-013-32600

3a. Address
410 17th Street Suite 2440 Denver, CO 80202

3b. Phone No. *(include area code)*
303 825-3344

10. Field and Pool, or Exploratory Area
Brundage Canyon

4. Location of Well *(Footage, Sec., T., R., M., or Survey Description)*

744' FSL x 569' FWL (SWSW), Section 14, Township 5 South, Range 5 West
40.041311 Lat, 110.422528 Long

11. County or Parish, State
Duchesne County, Utah

12. CHECK APPROPRIATE BOX(ES) TO INDICATE NATURE OF NOTICE, REPORT, OR OTHER DATA

TYPE OF SUBMISSION	TYPE OF ACTION			
☑ Notice of Intent	☐ Acidize	☐ Deepen	☐ Production (Start/Resume)	☐ Water Shut-Off
☐ Subsequent Report	☐ Alter Casing	☐ Fracture Treat	☐ Reclamation	☐ Well Integrity
☐ Final Abandonment Notice	☐ Casing Repair	☐ New Construction	☐ Recomplete	☐ Other **Completion Procedure**
	☐ Change Plans	☐ Plug and Abandon	☐ Temporarily Abandon	
	☐ Convert to Injection	☐ Plug Back	☐ Water Disposal	

13. Describe Proposed or Completed Operation (clearly state all pertinent details, including estimated starting date of any proposed work and approximate duration thereof. If the proposal is to deepen directionally or recomplete horizontally, give subsurface locations and measured and true vertical depths of all pertinent markers and zones. Attach the Bond under which the work will be performed or provide the Bond No. on file with BLM/BIA. Required subsequent reports shall be filed within 30 days following completion of the involved operations. If the operation results in a multiple completion or recompletion in a new interval, a Form 3160-4 shall be filed once testing has been completed. Final Abandonment Notices shall be filed only after all requirements, including reclamation, have been completed, and the operator has determined that the site is ready for final inspection.)

Please see the attached completion Procedure for the Ute Tribal 13-14-55

COPY SENT TO OPERATOR
Date: 8-30-04
Initials: CHD

RECEIVED
AUG 2 3 2004
DIV. OF OIL, GAS & MINING

14. I hereby certify that the foregoing is true and correct
Name *(Printed/Typed)*
Richard A. Haefele

Title **Technician**

Signature

Date **08/19/2004**

THIS SPACE FOR FEDERAL OR STATE OFFICE USE

Approved by

Title

Date

Federal Approval Of This Action Is Necessary

Conditions of approval, if any, are attached. Approval of this notice does not warrant or certify that the applicant holds legal or equitable title to those rights in the subject lease which would entitle the applicant to conduct operations thereon.

Office

Accepted by the Utah Division of Oil, Gas and Mining
Date: 8/25/04
By:

Title 18 U.S.C. Section 1001 and Title 43 U.S.C. Section 1212, make it a crime for any person knowingly and willfully to make to any department or agency of the United States any false, fictitious or fraudulent statements or representations as to any matter within its jurisdiction.

(Instructions on page 2)

UTE TRIBAL 13-14-55 **August 18, 2004**
LWR GREEN RIVER COMPLETION PROGRAM

Well Data:	**Location:**	**744' FSL, 569' FWL (SWSW)** **Sec. 14, T5S-R5W** **Duchesne County, Utah**
	API No:	**43-013-32600**
	Depth:	**TD 6,033'; PBTD X,XXX'**
	Elevation:	**KB 6,811'; GL 6,797'**
	CSG:	**8 5/8" 24# J-55 STC set @ 308' KB cmt'd w/ 115 sx. Cement** **5 ½" 15.5# J-55 LTC set @ 6,030' KB cmt'd w/ 250 sx lead Hifil + tail 400 sx light Prem.**
	TBG:	**2 7/8" 6.5# J-55 8rd** **w/ 2 7/8" SN 1 jt off btm. EOT @ X,XXX' TAC @ X,XXX'**
	Fm Tops:	**Base Mahogany @ 2,665', Dgls Crk Mbr @ 4,388', Upr Blk Shale @ 5,038', Cstl Pk Ls @ 5,300', Uteland Butte Ls @ 5,716'.**

Top of good cmt. bond: --TBD--

Correlate Depths to the Halliburton Spectral Density / Dual Spaced Neutron log, dated 8/15/04.

****

PROGRAM:

1) Install surface production equipment and pumping unit.

2) NU frachead & BOPE. Load hole.

3) MIRU wireline w/ mast pole. Run GR/CCL/CBL from PBTD to TOC. Verify PBTD & acceptable cmt bond across zones to be completed. Test csg to 2000 psi. Contact Denver if CBL or pressure test unsatisfactory. If acceptable, proceed and perf the following **Uteland Butte** intervals @ 2 jspf w/ 19.5 gm charges, 0.51" dia. holes:

5,757' – 62' (5', 10 holes)	**5,791' – 94'** (3', 6 holes)
5,770' – 73' (3', 6 holes)	**5,817' – 20'** (3', 6 holes)
5,781' – 86' (5', 10 holes)	**5,836' – 39'** (3', 6 holes)

(Total 22', 44 holes)

4) RU Halliburton & frac down csg per Halliburton design f/ Interval 1. Tail-in +/- 250 gals. 7 ½% HCl acid in flush to cover next perf interval. SD & record ISIP. RD frac equip f/ wellhead.

5) RU wireline. RIH w/ 5 ½" solid composite plug; run in tandem w/ 4" csg gun(s). Set plug @ +/- 5,700' Perf the following **Lower Castle Peak** interval @ 4 jspf, w/ 19.5 gm charges, 0.51" dia. holes:

5,656' – 67' (11', 44 holes)
(Total 11', 44 holes)

6) RU Halliburton & frac down csg per Halliburton design f/ Interval 2. Tail-in +/- 250 gals. 7 ½% HCl acid in flush to cover next perf interval. SD & record ISIP. RD frac equip f/ wellhead.

7) RU wireline. RIH w/ 5 ½" solid composite plug; run in tandem w/ 4" csg gun(s). Set plug @ +/- 5,575' Perf the following **Upper / Middle Castle Peak** interval @ 2 jspf, w/ 19.5 gm charges, 0.51" dia. holes:

5,337' – 39' (2', 4 holes)	**5,401' – 03'** (2', 4 holes)
5,344' – 46' (2', 4 holes)	**5,440' – 42'** (2', 4 holes)
5,362' – 64' (2', 4 holes)	**5,458' – 60'** (2', 4 holes)
5,372' – 74' (2', 4 holes)	**5,506' – 09'** (3', 6 holes)
5,394' – 97' (3', 6 holes)	**5,520' – 23'** (3', 6 holes)

(Total 23', 46 holes)

8) RU Halliburton & frac down csg per Halliburton design f/ Interval 3. Tail-in +/- 250 gals. 7 ½% HCl acid in flush to cover next perf interval. SD & record ISIP. RD frac equip f/ wellhead.

9) RU wireline. RIH w/ 5 ½" solid composite plug; run in tandem w/ 4" csg gun(s). Set plug @ +/- 5,100'. Perf the following **Douglas Creek I9 & I10** intervals @ 4 jspf, w/ 19.5 gm charges, 0.51" dia. holes:

4,973' – 77' (4', 16 holes)
4,998' – 5,008' (10', 40 holes)
(Total 14', 56 holes)

10) RU Halliburton & frac down csg per Halliburton design f/ Interval 4. SD, record ISIP, and RD frac equip. Open well to pit ASAP and force close frac. Leave well flowing to pit.

11) MIRU. PU 2 ⅞" tbg w/ bit & scraper. RIH w/ tbg to top of 1st plug. Drill out plug. Repeat for 2nd and 3rd plug. CO to PBTD & circ hole clean. POH & LD bit & scraper.

12) PU NC & SN & 5 ½" anchor catcher and RIH to mid-perf. RU swab. Swab until hole clean of sand. Verify hole clean to PBTD.

13) Pull up & Set anchor catcher. ND BOPE & frac head. NU tbg head & flow tee. RIH w/ pump & rod string. Seat pump & space out. Fill tbg & test to 500psi. Hang on clamps. Start well pumping. RD & MO.

Form 3160-5
(September 2001)

UNITED STATES
DEPARTMENT OF THE INTERIOR
BUREAU OF LAND MANAGEMENT

FORM APPROVED
OMB No. 1004-0135
Expires: January 31, 2004

RECEIVED
SEP 16 2004
DIV. OF OIL, GAS & MINING

011

SUNDRY NOTICES AND REPORTS ON WELLS

Do not use this form for proposals to drill or to re-enter an abandoned well. Use Form 3160-3 (APD) for such proposals.

SUBMIT IN TRIPLICATE - Other instructions on reverse side

5. Lease Serial No.

6. If Indian, Allottee or Tribe Name
Ute Tribe

7. If Unit or CA/Agreement, Name and/or No.

1. Type of Well
☑ Oil Well ☐ Gas Well ☐ Other Water Injection Well

8. Well Name and No.
See Attached

2. Name of Operator
Berry Petroleum Company

9. API Well No.

3a. Address
410 17th St Suite 2440 Denver, CO 80202

3b. Phone No. *(include area code)*
(303) 825-3344

10. Field and Pool, or Exploratory Area
Brundage Canyon

4. Location of Well *(Footage, Sec., T, R., M., or Survey Description)*
See Attached

11. County or Parish, State
Duchesne County, Utah

12. CHECK APPROPRIATE BOX(ES) TO INDICATE NATURE OF NOTICE, REPORT, OR OTHER DATA

TYPE OF SUBMISSION	TYPE OF ACTION			
☑ Notice of Intent	☐ Acidize	☐ Deepen	☐ Production (Start/Resume)	☐ Water Shut-Off
☐ Subsequent Report	☐ Alter Casing	☐ Fracture Treat	☐ Reclamation	☐ Well Integrity
☐ Final Abandonment Notice	☐ Casing Repair	☐ New Construction	☐ Recomplete	☑ Other Notice of confidentiality
	☐ Change Plans	☐ Plug and Abandon	☐ Temporarily Abandon	
	☐ Convert to Injection	☐ Plug Back	☐ Water Disposal	

3. Describe Proposed or Completed Operation (clearly state all pertinent details, including estimated starting date of any proposed work and approximate duration thereof If the proposal is to deepen directionally or recomplete horizontally, give subsurface locations and measured and true vertical depths of all pertinent markers and zones. Attach the Bond under which the work will be performed or provide the Bond No. on file with BLM/BIA. Required subsequent reports shall be filed within 30 days following completion of the involved operations. If the operation results in a multiple completion or recompletion in a new interval, a Form 3160-4 shall be filed once testing has been completed. Final Abandonment Notices shall be filed only after all requirements, including reclamation, have been completed, and the operator has determined that the site is ready for final inspection.)

Please be advised that Berry Petroleum Company would request that the below listed wells and their respective logs to be kept confidential.

K Ute Tribal 14-22-54
Ute Tribal 08-22-54
Williamson Tribal 05-34-54
Ute Tribal 13-15-55
K Ute Tribal 11-20-55
Ute Tribal 03-22-55
K Ute Tribal 14-36-55
Ute Tribal 10-14-55

OK Ute Tribal 10-22-54
OK Williamson Tribal 03-34-54
Ute Tribal 13-14-55 013-32600
Ute Tribal 09-22-55
Ute Tribal 02-22-55
OK Ute Tribal 16-35-55
Ute Tribal 11-22-55
Ute Tribal 02-22-54

14. I hereby certify that the foregoing is true and correct
Name *(Printed/Typed)*
Rich Haefele

Title Engineering Technician

Signature

Date September 13, 2004

RECEIVED
SEP 16 2004
DIV. OF OIL, GAS & MINING

THIS SPACE FOR FEDERAL OR STATE OFFICE USE

Approved by *(Signature)*

Name *(Printed/Typed)*

Title

Office

Date

Conditions of approval, if any, are attached. Approval of this notice does not warrant or certify that the applicant holds legal or equitable title to those rights in the subject lease which would entitle the applicant to conduct operations thereon.

Title 18 U.S.C. Section 1001 and Title 43 U.S.C. Section 1212, make it a crime for any person knowingly and willfully to make to any department or agency of the United States any false, fictitious or fraudulent statements or representations as to any matter within its jurisdiction.

(Continued on next page)

Form 3160-5
(April 2004)

UNITED STATES
DEPARTMENT OF THE INTERIOR
BUREAU OF LAND MANAGEMENT

FORM APPROVED
OMB No. 1004-0137
Expires: March 31, 2007

SUNDRY NOTICES AND REPORTS ON WELLS

012

Do not use this form for proposals to drill or to re-enter an abandoned well. Use Form 3160-3 (APD) for such proposals.

SUBMIT IN TRIPLICATE- Other instructions on reverse side.

CONFIDENTIAL

5. Lease Serial No.
14-20-H62-5016

6. If Indian, Allottee or Tribe Name
Ute

7. If Unit or CA/Agreement, Name and/or No.

1. Type of Well
☑ Oil Well ☐ Gas Well ☐ Other

2. Name of Operator **Berry Petroleum Company**

8. Well Name and No.
Ute Tribal 13-14-55

9. API Well No.
43-013-32600

3a. Address
410 17th Street Suite 2440 Denver, CO 80202

3b. Phone No. *(include area code)*
303 825-3344

10. Field and Pool, or Exploratory Area
Brundage Canyon

4. Location of Well *(Footage, Sec., T., R., M., or Survey Description)*

744' FSL x 569' FWL (SWSW), Section 14, Township 5 South, Range 5 West
40.041311 Lat, 110.422528 Long

11. County or Parish, State
Duchesne County, Utah

12. CHECK APPROPRIATE BOX(ES) TO INDICATE NATURE OF NOTICE, REPORT, OR OTHER DATA

TYPE OF SUBMISSION	TYPE OF ACTION			
☑ Notice of Intent	☐ Acidize	☐ Deepen	☐ Production (Start/Resume)	☐ Water Shut-Off
☐ Subsequent Report	☐ Alter Casing	☐ Fracture Treat	☐ Reclamation	☐ Well Integrity
☐ Final Abandonment Notice	☐ Casing Repair	☐ New Construction	☐ Recomplete	☑ Other **Noticed of First Sales**
	☐ Change Plans	☐ Plug and Abandon	☐ Temporarily Abandon	
	☐ Convert to Injection	☐ Plug Back	☐ Water Disposal	

13. Describe Proposed or Completed Operation (clearly state all pertinent details, including estimated starting date of any proposed work and approximate duration thereof. If the proposal is to deepen directionally or recomplete horizontally, give subsurface locations and measured and true vertical depths of all pertinent markers and zones. Attach the Bond under which the work will be performed or provide the Bond No. on file with BLM/BIA. Required subsequent reports shall be filed within 30 days following completion of the involved operations. If the operation results in a multiple completion or recompletion in a new interval, a Form 3160-4 shall be filed once testing has been completed. Final Abandonment Notices shall be filed only after all requirements, including reclamation, have been completed, and the operator has determined that the site is ready for final inspection.)

Please note that the Ute Tribal 13-14-55 went to sales on 9/1/2004.

14. I hereby certify that the foregoing is true and correct
Name *(Printed/Typed)* **Jeff Schroeder** Title **Regulatory**

Signature **Jeff Schroeder** Digitally signed by Jeff Schroeder DN: CN = Jeff Schroeder, C = US Date: 2004.09.28 09:49:51 -07'00' Date **09/28/2004**

THIS SPACE FOR FEDERAL OR STATE OFFICE USE

Approved by _____ Title _____ Date _____

Conditions of approval, if any, are attached. Approval of this notice does not warrant or certify that the applicant holds legal or equitable title to those rights in the subject lease which would entitle the applicant to conduct operations thereon. Office

Title 18 U.S.C. Section 1001 and Title 43 U.S.C. Section 1212, make it a crime for any person knowingly and willfully to make to any department or agency of the United States any false, fictitious or fraudulent statements or representations as to any matter within its jurisdiction.

(Instructions on page 2)

RECEIVED
OCT 04 2004
DIV. OF OIL, GAS & MINING

Form 3160-4
(April 2004)

UNITED STATES
DEPARTMENT OF THE INTERIOR
BUREAU OF LAND MANAGEMENT

FORM APPROVED
OMB NO. 1004-0137
Expires: March 31, 2007

013

WELL COMPLETION OR RECOMPLETION REPORT AND LOG

5. Lease Serial No. **14-20-H62-5016**

1a. Type of Well [✓] Oil Well [ ] Gas Well [ ] Dry [ ] Other

b. Type of Completion: [✓] New Well [ ] Work Over [ ] Deepen [ ] Plug Back [ ] Diff. Resvr, .

Other _____

CONFIDENTIAL

6. If Indian, Allottee or Tribe Name **UTE**

7. Unit or CA Agreement Name and No.

2. Name of Operator **Berry Petroleum Company**

8. Lease Name and Well No. **Ute Tribal 13-14-55**

3. Address **410 17th Street, Suite 2440 Denver, CO 80202**

3a. Phone No. *(include area code)* **303-825-3344**

9. AFI Well No. **43-013-32600**

4. Location of Well *(Report location clearly and in accordance with Federal requirements)**

At surface **744' FSL, 569' FWL (SWSW), Section 14, Township 5 South, Range 5 West**

At top prod. interval reported below **Same As Above**

At total depth **Same As Above**

10. Field and Pool, or Exploratory **Brundage Canyon**

11. Sec., T., R., M., on Block and Survey or Area **Sec 14, T5S, R5W**

12. County or Parish **Duchesne**

13. State **UT**

14. Date Spudded **07/30/2004**

15. Date T.D. Reached **08/14/2004**

16. Date Completed **09/01/2004** [ ] D & A [✓] Ready to Prod.

17. Elevations (DF, RKB, RT, GL)* **6,811' - KB, 6,797' - GL**

18. Total Depth: MD **6,033'** TVD

19. Plug Back T.D.: MD **5,982'** TVD

20. Depth Bridge Plug Set: MD TVD

21. Type Electric & Other Mechanical Logs Run (Submit copy of each)
Induction, Dual Density Neutron, Microlog 08/15/2004 MUD LOG CBL

22. Was well cored? [✓] No [ ] Yes (Submit analysis)
Was DST run? [✓] No [ ] Yes (Submit report)
Directional Survey? [✓] No [ ] Yes (Submit copy)

23. Casing and Liner Record *(Report all strings set in well)*

Hole Size	Size/Grade	Wt. (#/ft.)	Top (MD)	Bottom (MD)	Stage Cementer Depth	No. of Sks. & Type of Cement	Slurry Vol. (BBL)	Cement Top*	Amount Pulled
12 1/4"	8 5/8"	24#	Surface	308'		115 sks		Surface	
7 7/8"	5 1/2"	15.5#	Surface	5,844'		700 sks		Surface	

24. Tubing Record

Size	Depth Set (MD)	Packer Depth (MD)	Size	Depth Set (MD)	Packer Depth (MD)	Size	Depth Set (MD)	Packer Depth (MD)
2 7/8"	5,889.82'							

25. Producing Intervals

Formation	Top	Bottom
A) Green River	4,973'	5,839'
B)		
C)		
D)		

26. Perforation Record

Perforated Interval	Size	No. Holes	Perf. Status
4,973'- 5,008'	0.51"	56	Open
5,337'- 5,667'	0.51"	90	Open
5,757'- 5,839'	0.51"	44	Open

27. Acid, Fracture, Treatment, Cement Squeeze, etc.

Depth Interval	Amount and Type of Material
4,973'- 5,008'	Frac w/402 sxs sand & 494 bbls fluid (08/28/2004)
5,337'- 5,667'	Frac w/1,100 sxs sand & 1,419 bbls fluid
5,757'- 5,839'	Frac w/600 sxs sand & 1,076 bbls fluid

RECEIVED
DEC 0 3 2004
DIV. OF OIL, GAS & MINING

28. Production - Interval A

Date First Produced	Test Date	Hours Tested	Test Production	Oil BBL	Gas MCF	Water BBL	Oil Gravity Corr. API	Gas Gravity	Production Method
09/02/2004	09/19/2004	24	→	45	42	21			Pumping

Choke Size	Tbg. Press. Flwg. SI	Csg. Press.	24 Hr. Rate	Oil BBL	Gas MCF	Water BBL	Gas/Oil Ratio	Well Status
	20	0	→					Producing

28a. Production - Interval B

Date First Produced	Test Date	Hours Tested	Test Production	Oil BBL	Gas MCF	Water BBL	Oil Gravity Corr. API	Gas Gravity	Production Method
			→						

Choke Size	Tbg. Press. Flwg. SI	Csg. Press.	24 Hr. Rate	Oil BBL	Gas MCF	Water BBL	Gas/Oil Ratio	Well Status
			→					

**(See instructions and spaces for additional data on page 2)*

CONFIDENTIAL

28b. Production - Interval C

Date First Produced	Test Date	Hours Tested	Test Production →	Oil BBL	Gas MCF	Water BBL	Oil Gravity Corr. API	Gas Gravity	Production Method
Choke Size	Tbg. Press. Flwg. SI	Csg. Press.	24 Hr. Rate →	Oil BBL	Gas MCF	Water BBL	Gas/Oil Ratio	Well Status	

28c. Production - Interval D

Date First Produced	Test Date	Hours Tested	Test Production →	Oil BBL	Gas MCF	Water BBL	Oil Gravity Corr. API	Gas Gravity	Production Method
Choke Size	Tbg. Press. Flwg. SI	Csg. Press.	24 Hr. Rate →	Oil BBL	Gas MCF	Water BBL	Gas/Oil Ratio	Well Status	

29. Disposition of Gas *(Sold, used for fuel, vented, etc.)*

30. Summary of Porous Zones (Include Aquifers):

Show all important zones of porosity and contents thereof: Cored intervals and all drill-stem tests, including depth interval tested, cushion used, time tool open, flowing and shut-in pressures and recoveries.

31. Formation (Log) Markers

Formation	Top	Bottom	Descriptions, Contents, etc.	Name	Top Meas. Depth
				Uinta	**Surf**
				Green River	**1,344**
				Base Mahogany	**2,665**
				TGR3 Mrkr	**3,614**
				Douglas Creek	**4,388**
				Upper Black Shale	**5,038**
				Base Castle Peak	**5,322**
				Uteland Butte	**5,716**
				Top Wasatch	**5,952**

32. Additional remarks (include plugging procedure):

33. Indicate which itmes have been attached by placing a check in the appropriate boxes:

☐ Electrical/Mechanical Logs (1 full set req'd.) ☐ Geologic Report ☐ DST Report ☐ Directional Survey
☐ Sundry Notice for plugging and cement verification ☐ Core Analysis ☐ Other:

34. I hereby certify that the foregoing and attached information is complete and correct as determined from all available records (see attached instructions)*

Name *(please print)* **Jeff Schroeder** Title **Regulatory**

Signature **Jeff Schroeder** Digitally signed by Jeff Schroeder DN: CN = Jeff Schroeder, C = US Date: 2004.11.15 12:18:00 -08'00' Date **11/15/2004**

Title 18 U.S.C Section 1001 and Title 43 U.S.C Section 1212, make it a crime for any person knowingly and willfully to make to any department or agency of the United States any false, fictitious or fraudulent statements or representations as to any matter within its jurisdiction.

STATE OF UTAH
DEPARTMENT OF NATURAL RESOURCES
DIVISION OF OIL, GAS AND MINING

FORM 9

SUNDRY NOTICES AND REPORTS ON WELLS

Do not use this form for proposals to drill new wells, significantly deepen existing wells below current bottom-hole depth, reenter plugged wells, or to drill horizontal laterals. Use APPLICATION FOR PERMIT TO DRILL form for such proposals.

5. LEASE DESIGNATION AND SERIAL NUMBER: See attached list

6. IF INDIAN, ALLOTTEE OR TRIBE NAME:

7. UNIT or CA AGREEMENT NAME:

1. TYPE OF WELL: OIL WELL ☑ GAS WELL ☑ OTHER

8. WELL NAME and NUMBER: See Attached List

2. NAME OF OPERATOR: Berry Petroleum

9. API NUMBER: Attached

3. ADDRESS OF OPERATOR: Rt 2 Box 7735 CITY Roosevelt STATE UT ZIP 84066 PHONE NUMBER: (435) 722-1325

10. FIELD AND POOL, OR WILDCAT:

4. LOCATION OF WELL

FOOTAGES AT SURFACE:

COUNTY: Duchesne

QTR/QTR, SECTION, TOWNSHIP, RANGE, MERIDIAN:

STATE: UTAH

11. CHECK APPROPRIATE BOXES TO INDICATE NATURE OF NOTICE, REPORT, OR OTHER DATA

TYPE OF SUBMISSION	TYPE OF ACTION		
☐ NOTICE OF INTENT (Submit in Duplicate)	☐ ACIDIZE	☐ DEEPEN	☐ REPERFORATE CURRENT FORMATION
Approximate date work will start:	☐ ALTER CASING	☐ FRACTURE TREAT	☐ SIDETRACK TO REPAIR WELL
	☐ CASING REPAIR	☐ NEW CONSTRUCTION	☐ TEMPORARILY ABANDON
	☐ CHANGE TO PREVIOUS PLANS	☐ OPERATOR CHANGE	☐ TUBING REPAIR
	☐ CHANGE TUBING	☐ PLUG AND ABANDON	☐ VENT OR FLARE
☑ SUBSEQUENT REPORT (Submit Original Form Only)	☐ CHANGE WELL NAME	☐ PLUG BACK	☑ WATER DISPOSAL
Date of work completion:	☐ CHANGE WELL STATUS	☐ PRODUCTION (START/RESUME)	☐ WATER SHUT-OFF
	☐ COMMINGLE PRODUCING FORMATIONS	☐ RECLAMATION OF WELL SITE	☐ OTHER:
	☐ CONVERT WELL TYPE	☐ RECOMPLETE - DIFFERENT FORMATION	

12. DESCRIBE PROPOSED OR COMPLETED OPERATIONS. Clearly show all pertinent details including dates, depths, volumes, etc.

Produced wastewater from Berry Petroleum Company wells (see attached well list) will be or have been used for injection in our enhanced oil recovery project(s) in the Brundage Canyon Field or they will be trucked to one of the following approved waste water disposal sites:

- R.N. Industries, Inc. Sec. 4, T2S, R2W, Bluebell
- MC & MC Disposal Sec. 12, T6S, R19E, Vernal
- LaPoint Recycle & Storage Sec. 12, T5S, R19E, LaPoint
- Water Disposal Inc. Sec. 32, T1S, R1W, Roosevelt
- ITL 4461 W 3000 So Roosevelt Location Pleasant Valley
- IWM PO Box 430 Altamont or 20250 W 2000 S Duchesne Location – Blue Bench
- Pro Water 12223 Highland Ave Ste B503 Rancho Cucamonga Ca 91739 Location – Blue Bench

COPY SENT TO OPERATOR
Date: 12-13-2012
Initials: KS

Approved by the Utah Division of Oil, Gas and Mining

Date: 12/11/12

NAME (PLEASE PRINT) Krista Mecham **By:** TITLE Sr. Regulatory & Permitting Tech

SIGNATURE Krista Mecham DATE 11/21/2012

(This space for State use only) Federal Approval of this action required for Federal Wells.

RECEIVED
DEC 06 2012
DIV. OF OIL, GAS & MINING

(5/2000) (See Instructions on Reverse Side)

API	Well Name	Lease
43-013-32710	#1 DLB 12-15-56	Fee
43-013-33447	1-15-56 DLB	Fee
43-013-33378	14-11-56 DLB	Fee
43-013-30842	B C UTE TRIBAL 14-15	14-20-H62-3412
43-013-30841	B C UTE TRIBAL 16-16	14-20-H62-3413
43-013-30829	B C UTE TRIBAL 8-21	14-20-H62-3414
43-013-30755	BC UTE TRIBAL 4-22	14-20-H62-3415
43-013-33216	BERRY TRIBAL 1-23-54	14-20-H62-4943
43-013-33867	BERRY TRIBAL 2-34D-54	14-20-H62-4955
43-013-33384	BERRY TRIBAL 4-34-54	14-20-H62-4955
43-013-33381	BERRY TRIBAL 7-23-54	14-20-H62-4943
43-013-33383	BERRY TRIBAL 7-34-54	14-20-H62-4955
43-013-33417	BERRY TRIBAL 8-23D-54	14-20-H62-4943
43-013-33465	BERRY TRIBAL 9-23-54	14-20-H62-4943
43-013-33382	BERRY TRIBAL 9-34-54	14-20-H62-4955
43-013-33724	BERRY TRIBAL 10-23D-54	14-20-H62-4943
43-013-33422	BERRY TRIBAL 10-34D-54	14-20-H62-4955
43-013-33725	BERRY TRIBAL 11-23D-54	14-20-H62-4943
43-013-33529	BERRY TRIBAL 11-34D-54	14-20-H62-4955
43-013-50527	BERRY TRIBAL 12-34D-54	14-20-H62-4955
43-013-34043	BERRY TRIBAL 13-23-54	14-20-H62-4943
43-013-33989	BERRY TRIBAL 14-23D-54	14-20-H62-4943
43-013-33217	BERRY TRIBAL 15-23-54	14-20-H62-4943
43-013-33411	BERRY TRIBAL 15-34-54	14-20-H62-4955
43-013-33464	BERRY TRIBAL 16-34D-54	14-20-H62-4955
43-013-50524	FEDERAL 1-1D-64	UTU-77321
43-013-51142	FEDERAL 1-1D-65	UTU-77326
43-013-51232	FEDERAL 1-11-65	UTU-77330
43-013-50326	FEDERAL 10-1D-65	UTU-77326
43-013-33542	FEDERAL 10-2-65	UTU-77326
43-013-33386	FEDERAL 10-3-65	UTU-77326
43-013-50735	FEDERAL 10-6D-64	UTU-77322
43-013-33451	FEDERAL 11-10-65	UTU-77330
43-013-50327	FEDERAL 11-1D-65	UTU-77326
43-013-50763	FEDERAL 11-2D-65	UTU-77326
43-013-50565	FEDERAL 11-4D-64	UTU-77314
43-013-50348	FEDERAL 11-5D-64	UTU-8894A
43-013-34284	FEDERAL 11-6D-64	UTU-77322
43-013-50328	FEDERAL 12-1D-65	UTU-77326
43-013-50737	FEDERAL 12-3D-64	UTU-77321
43-013-50349	FEDERAL 12-5D-64	UTU-8894A
43-013-50261	FEDERAL 12-6D-64	UTU-77322
43-013-50730	FEDERAL 1-2D-64	UTU-77321
43-013-33966	FEDERAL 1-2D-65	UTU-77326
43-013-50329	FEDERAL 13-1D-65	UTU-77326
43-013-50337	FEDERAL 13-5D-64	UTU-8894A
43-013-50347	FEDERAL 13-6D-64	UTU77322
43-013-50330	FEDERAL 14-1D-65	UTU-77326

43-013-50338	FEDERAL 14-5D-64	UTU-8894A
43-013-34285	FEDERAL 14-6D-64	UTU-77322
43-013-51175	FEDERAL 15-1D-65	UTU-77326
43-013-50764	FEDERAL 15-2D-65	UTU-77326
43-013-50553	FEDERAL 15-5D-65	UTU-77327
43-013-51176	FEDERAL 16-1D-65	UTU-77326
43-013-33490	FEDERAL 16-5-65	UTU-77327
43-013-50266	FEDERAL 1-6-64	UTU-77322
43-013-51233	FEDERAL 2-11D-65	UTU-77326
43-013-50759	FEDERAL 2-1D-65	UTU-77326
43-013-33385	FEDERAL 2-2-65	UTU-77326
43-013-34018	FEDERAL 2-2D-64	UTU-77321
43-013-34286	FEDERAL 2-6D-64	UTU-77322
43-013-51093	FEDERAL 3-12D-65	UTU-77326
43-013-50760	FEDERAL 3-1D-65	UTU-77326
43-013-34001	FEDERAL 3-2D-65	UTU-77326
43-013-50782	FEDERAL 3-4D-65	UTU-77327
43-013-34287	FEDERAL 3-5D-64	UTU-8894A
43-013-50268	FEDERAL 3-6D-64	UTU-77322
43-013-51094	FEDERAL 4-12D-65	UTU-77326
43-013-50736	FEDERAL 4-3D-64	UTU-77321
43-013-50521	FEDERAL 4-4D-65	UTU-77327
43-013-50263	FEDERAL 4-5D-64	UTU-8894A
43-013-50267	FEDERAL 4-6D-64	UTU-77322
43-013-51095	FEDERAL 5-12D-65	UTU-77330
43-013-50761	FEDERAL 5-1D-65	UTU-77326
43-013-33448	FEDERAL 5-3-64	UTU-77321
43-013-33450	FEDERAL 5-4-64	UTU-77326
43-013-33387	FEDERAL 5-4-65	UTU-77327
43-013-50259	FEDERAL 5-5D-64	UTU-8894A
43-013-33489	FEDERAL 5-6-65	UTU-77327
43-013-50269	FEDERAL 5-6D-64	UTU-77322
43-013-33491	FEDERAL 6-11-65	UTU-77330
43-013-51096	FEDERAL 6-12D-65	UTU-77330
43-013-32699	FEDERAL 6-1-65	UTU-77325
43-013-32557	FEDERAL 6-2-65	UTU-77326
43-013-50522	FEDERAL 6-3D-64	UTU-77321
43-013-34288	FEDERAL 6-5D-64	UTU-8894A
43-013-33745	FEDERAL 6-6D-64	UTU-77322
43-013-50566	FEDERAL 6-6D-65	UTU-77327
43-013-34061	FEDERAL 7-11D-65	UTU-77330
43-013-34015	FEDERAL 7-1D-65	UTU-77325
43-013-50734	FEDERAL 7-2D-64	UTU-77321
43-013-50525	FEDERAL 7-2D-65	UTU-77326
43-013-34065	FEDERAL 7-3D-65	UTU-77326
43-013-34020	FEDERAL 7-6D-64	UTU-77322
43-013-51232	FEDERAL 8-11D-65	UTU-77326
43-013-33449	FEDERAL 8-1-64	UTU-77321
43-013-50350	FEDERAL 8-1D-65	UTU-77326

43-013-33581	FEDERAL 8-2D-64	UTU-77321
43-013-50719	FEDERAL 8-2D-65	UTU-77326
43-013-50325	FEDERAL 8-6D-64	UTU-77322
43-013-50342	FEDERAL 9-1D-65	UTU-77326
43-013-50762	FEDERAL 9-2D-65	UTU-77326
43-013-51218	FEDERAL 9-6D-64	UTU-77322
43-013-32351	FOY TRIBAL 11-34-55	UTU-76968
43-013-33799	FOY TRIBAL 12H-33-55	FEE
43-013-51288	LC FEE 10-28D-56	FEE
43-013-50994	LC FEE 10-31D-45	FEE
43-013-50965	LC FEE 1-22-57	FEE
43-013-50718	LC FEE 1-22D-56	FEE
43-013-51371	LC FEE 1-31D-45	FEE
43-013-50929	LC FEE 13-29-45	FEE
43-013-50870	LC FEE 15-23D-56	FEE
43-013-50601	LC FEE 16-16D-56	FEE
43-013-50777	LC FEE 2-20D-56	FEE
43-013-33593	LC FEE 6-12-57	FEE
43-013-50867	LC FEE 8-28D-56	FEE
43-013-50928	LC FEE 8-29-45	FEE
43-013-50963	LC FEE 9-12D-57	FEE
43-013-51192	LC FEE 9-19-56	FEE
43-013-50602	LC TRIBAL 10-16D-56	14-20-H62-6301
43-013-50999	LC TRIBAL 10-21-56	14-20-H62-3433
43-013-33677	LC TRIBAL 11-17-56	14-20-H62-6300
43-013-50751	LC TRIBAL 11-3D-56	14-20-H62-6435
43-013-50780	LC TRIBAL 12-22D-56	14-20-H62-6302
43-013-33606	LC TRIBAL 12H-6-56	14-20-H62-5500
43-013-34282	LC TRIBAL 13-16D-56	14-20-H62-5623
43-013-33591	LC TRIBAL 13H-3-56	14-20-H62-6435
43-013-50776	LC TRIBAL 14-14D-56	14-20-H62-6436
43-013-50834	LC TRIBAL 14-15D-56	14-20-H62-6435
43-013-33492	LC TRIBAL 14-2-56	14-20-H62-6472
43-013-51030	LC TRIBAL 15-15D-56	14-20-H62-6435
43-013-50606	LC TRIBAL 15-22D-56	14-20-H62-6302
43-013-50871	LC TRIBAL 15-26-56	14-20-H62-6471
43-013-51132	LC TRIBAL 16-30D-56	2OG-000-5500
43-013-33608	LC TRIBAL 1-9-56	14-20-H62-5657
43-013-33538	LC TRIBAL 2-16D-56	14-20-H62-5623
43-013-51429	LC TRIBAL 2-28D-45	2OG-000-5500
43-013-50866	LC TRIBAL 2-28D-56	14-20-H62-6473
43-013-50925	LC TRIBAL 2-5D-56	14-20-H62-6432
43-013-50926	LC TRIBAL 2-9D-56	14-20-H62-5657
43-013-50598	LC TRIBAL 3-15D-56	14-20-H62-6435
43-013-33541	LC TRIBAL 3-17-56	14-20-H62-5655
43-013-50751	LC TRIBAL 3-21D-56	14-20-H62-3433
43-013-50976	LC TRIBAL 3-34-45	2OG-000-5500
43-013-33580	LC TRIBAL 3-5-56	14-20-H62-6257
43-013-33539	LC TRIBAL 4-16-56	14-20-H62-6301

43-013-50262	LC TRIBAL 4-27D-56	14-20-H62-6303
43-013-50661	LC TRIBAL 5-14D-56	14-20-H62-6436
43-013-50752	LC TRIBAL 5-21D-56	14-20-H62-3433
43-013-50625	LC TRIBAL 5-23D-56	14-20-H62-6434
43-013-50260	LC TRIBAL 6-22D-56	14-20-H62-6302
43-013-50868	LC TRIBAL 6-27D-56	14-20-H62-6303
43-013-51034	LC TRIBAL 6-28-45	2OG-000-5500
43-013-51073	LC TRIBAL 7-27-45	2OG-000-5500
43-013-33577	LC TRIBAL 7-3-56	14-20-H62-5656
43-013-50599	LC TRIBAL 8-16D-56	14-20-H62-6301
43-013-33576	LC TRIBAL 8-28-46	14-20-H62-5500
43-013-51131	LC TRIBAL 8-30D-56	2OG-000-5500
43-013-33605	LC TRIBAL 8-4-56	14-20-H62-6256
43-013-51031	LC TRIBAL 9-15D-56	14-20-H62-6435
43-013-51430	LC TRIBAL 9-28D-45	2OG-000-5500
43-013-51112	LC TRIBAL 9-8D-56	2OG-000-5500
43-013-51198	LC TRIBAL 9-9D-56	2OG-000-5500
43-013-51076	LC Tribal 11-24-45	2OG-000-5500
43-013-32931	MOON TRIBAL 10-2-54	14-20-H62-3404
43-013-32540	MOON TRIBAL 10-27-54	14-20-H62-3375
43-013-32845	MOON TRIBAL 11-27-54	14-20-H62-3375
43-013-32347	MOON TRIBAL 12-23-54	14-20-H62-4943
43-013-32541	MOON TRIBAL 12-27-54	14-20-H62-3375
43-013-32937	MOON TRIBAL 1-27-54	14-20-H62-3375
43-013-32801	MOON TRIBAL 13-27-54	14-20-H62-3375
43-013-32408	MOON TRIBAL 14-27-54	14-20-H62-3375
43-013-32846	MOON TRIBAL 15-27-54	14-20-H62-3375
43-013-32927	MOON TRIBAL 16-23-54	14-20-H62-4943
43-013-34109	MOON TRIBAL 16-27D-54	14-20-H62-3375
43-013-32613	MOON TRIBAL 3-27-54	14-20-H62-3375
43-013-32800	MOON TRIBAL 4-23-54	14-20-H62-4943
43-013-32938	MOON TRIBAL 5-23-54	14-20-H62-4943
43-013-32802	MOON TRIBAL 5-27-54	14-20-H62-3375
43-013-32843	MOON TRIBAL 6-23-54	14-20-H62-4943
43-013-32407	MOON TRIBAL 6-27-54	14-20-H62-3375
43-013-33365	MOON TRIBAL 7-27D-54	14-20-H62-3375
43-013-32543	MOON TRIBAL 8-27-54	14-20-H62-3375
43-013-32782	MYRIN TRIBAL 14-19-55	14-20-H62-5058
43-013-32934	MYRIN TRIBAL 16-19-55	14-20-H62-5058
43-013-33152	NIELSEN FEE 13-11-56	14-20-H62-5620
43-013-32737	NIELSEN MARSING 13-14-56	FEE
43-013-31131	S BRUNDAGE CYN UTE TRIBAL 4-27	14-20-H62-3375
43-013-30948	S BRUNDAGE UTE TRIBAL 1-30	14-20-H62-3417
43-013-30933	S COTTONWOOD RIDGE UTE TRIBAL 1-19	14-20-H62-4919
43-007-30890	SCOFIELD THORPE 22-41X RIG SKID	FEE
43-007-31001	SCOFIELD-THORPE 23-31	FEE
43-007-30991	SCOFIELD-THORPE 35-13	FEE
43-013-50686	SFW FEE 14-10D-54	FEE
43-013-50247	SFW FEE 15-10-54	FEE

43-013-34295	SFW TRIBAL 10-10D-54	14-20-H62-5517
43-013-34296	SFW TRIBAL 9-10D-54	14-20-H62-5517
43-013-31701	SOWERS CANYON 9-27	14-20-H62-4753/UTU-76967
43-013-30955	SOWERS CYN UTE TRIBAL 3-26	14-20-H62-3444
43-013-33916	ST TRIBAL 1-15D-54	14-20-H62-4661
43-013-32849	ST TRIBAL 2-15-54	14-20-H62-4661
43-013-34059	ST TRIBAL 3-15D-54	14-20-H62-4661
43-013-32850	ST TRIBAL 4-15-54	14-20-H62-4661
43-013-34060	ST TRIBAL 5-15D-54	14-20-H62-4661
43-013-32848	ST TRIBAL 6-15-54	14-20-H62-4661
43-013-33950	ST TRIBAL 7-15D-54	14-20-H62-4661
43-013-32851	ST TRIBAL 8-15-54	14-20-H62-4661
43-013-33951	ST TRIBAL 9-15D-54	14-20-H62-4661
43-013-50245	STATE TRIBAL 16-10-54	14-20-H62-5517
43-013-32953	STATE TRIBAL 5-18-54	14-20-H62-5035
43-013-32952	STATE TRIBAL 7-18-54	14-20-H62-5035
43-013-30999	T C UTE TRIBAL 9-23X	14-20-H62-3443
43-013-31699	TABBY CANYON 1-21	14-20-H62-4825/UTU-76965
43-013-31700	TABBY CANYON 8-22	14-20-H62-4754/UTU-76966
43-013-30945	TABBY CYN UTE TRIBAL 1-25	14-20-H62-3537
43-013-33121	TAYLOR FEE 13-22-56	FEE
43-013-33140	TAYLOR FEE 7-14-56	FEE
43-013-32738	TAYLOR HERRICK 10-22-56	FEE
43-013-51271	UTE FEE 14-9D-54	FEE
43-013-51272	UTE FEE 15-9D-54	FEE
43-013-33720	UTE FEE 2-13-55	FEE
43-013-51259	UTE FEE 9-9-54	FEE
43-013-33055	UTE TRIBAL 10-12-55	14-20-H62-5056
43-013-33205	UTE TRIBAL 10-14-54	14-20-H62-5033
43-013-32601	UTE TRIBAL 10-14-55	14-20-H62-5016
43-013-32587	UTE TRIBAL 10-15-54	14-20-H62-4661
43-013-32977	UTE TRIBAL 10-15-55	14-20-H62-5017
43-013-33129	UTE TRIBAL 10-16-54	14-20-H62-3413
43-013-32345	UTE TRIBAL 10-16-55	14-20-H62-5024
43-013-33133	UTE TRIBAL 10-17-54	14-20-H62-4731
43-013-33300	UTE TRIBAL 10-18-54	14-20-H62-4919
43-013-32717	UTE TRIBAL 10-19-54	14-20-H62-3528
43-013-32740	UTE TRIBAL 10-20-54	14-20-H62-3529
43-013-32603	UTE TRIBAL 10-21-55	14-20-H62-4825
43-013-32592	UTE TRIBAL 10-22-54	14-20-H62-3415
43-013-33722	UTE TRIBAL 10-22D-55	14-20-H62-4754
43-013-33358	UTE TRIBAL 10-23D-55	14-20-H62-3443
43-013-32932	UTE TRIBAL 10-24-54	14-20-H62-4716
43-013-33156	UTE TRIBAL 10-24D-55	14-20-H62-4749
43-013-32749	UTE TRIBAL 10-25-55	14-20-H62-3537
43-013-33620	UTE TRIBAL 10-26D-54	14-20-H62-4954
43-013-33360	UTE TRIBAL 10-26D-55	14-20-H62-3444
43-013-33683	UTE TRIBAL 10-27D-55	14-20-H62-4753
43-013-32764	UTE TRIBAL 10-28-54	14-20-H62-4740

43-013-32419	UTE TRIBAL 10-28-55	14-20-H62-5019
43-013-33155	UTE TRIBAL 10-29-54	14-20-H62-5036
43-013-33157	UTE TRIBAL 10-29D-55	14-20-H62-5020
43-013-32847	UTE TRIBAL 10-31-54	14-20-H62-4946
43-013-32936	UTE TRIBAL 10-31-55	14-20-H62-5060
43-013-33902	UTE TRIBAL 10-32-54	14-20-H62-4947
43-013-33092	UTE TRIBAL 10-33-54	14-20-H62-4948
43-013-32353	UTE TRIBAL 10-35-55	14-20-H62-4945
43-013-33968	UTE TRIBAL 10-36D-55	14-20-H62-4944
43-013-50854	UTE TRIBAL 10S-21D-54	14-20-H62-3141
43-013-32721	UTE TRIBAL 11-12-55	14-20-H62-5518
43-013-32568	UTE TRIBAL 11-13-54	14-20-H62-4894
43-013-33268	UTE TRIBAL 11-13-55	14-20-H62-4845
43-013-32693	UTE TRIBAL 11-14-55	14-20-H62-5016
43-013-33206	UTE TRIBAL 11-15-54	14-20-H62-4661
43-013-32980	UTE TRIBAL 11-15-55	14-20-H62-5017
43-013-32589	UTE TRIBAL 11-16-54	14-20-H62-3413
43-013-32145	UTE TRIBAL 11-17	14-20-H62-4731
43-013-31547	UTE TRIBAL 11-19	14-20-H62-3528
43-013-32168	UTE TRIBAL 11-20	14-20-H62-3529
43-013-32415	UTE TRIBAL 11-20-55	14-20-H62-5018
43-013-33115	UTE TRIBAL 11-21-54	14-20-H62-3414
43-013-33116	UTE TRIBAL 11-22-54	14-20-H62-3415
43-013-32607	UTE TRIBAL 11-22-55	14-20-H62-4754
43-013-32269	UTE TRIBAL 11-23-55	14-20-H62-3443
43-013-31909	UTE TRIBAL 11-24	14-20-H62-4749
43-013-31911	UTE TRIBAL 11-25	14-20-H62-3537
43-013-32856	UTE TRIBAL 11-25-54	14-20-H62-3440
43-013-32990	UTE TRIBAL 11-25-56	14-20-H62-5065
43-013-32844	UTE TRIBAL 11-26-54	14-20-H62-4954
43-013-33478	UTE TRIBAL 11-26D-55	14-20-H62-3444
43-013-32615	UTE TRIBAL 11-27-55	14-20-H62-4753
43-013-32192	UTE TRIBAL 11-28	14-20-H62-4740
43-013-34057	UTE TRIBAL 11-28-55	14-20-H62-5019
43-013-32563	UTE TRIBAL 11-29-54	14-20-H62-5032
43-013-32512	UTE TRIBAL 11-30-54	14-20-H62-4662
43-013-32530	UTE TRIBAL 11-31-54	14-20-H62-4946
43-013-33793	UTE TRIBAL 11-32D-54	14-20-H62-4947
43-013-32522	UTE TRIBAL 11-33-54	14-20-H62-4948
43-013-33783	UTE TRIBAL 11-35-55	14-20-H62-5053
43-013-33214	UTE TRIBAL 11-36D-55	14-20-H62-4944
43-013-33769	UTE TRIBAL 1-14D-54	14-20-H62-5033
43-013-33279	UTE TRIBAL 1-14D-55	14-20-H62-5016
43-013-32664	UTE TRIBAL 11-5-54	14-20-H62-5516
43-013-32978	UTE TRIBAL 1-15-55	14-20-H62-5017
43-013-33128	UTE TRIBAL 1-16-54	14-20-H62-3413
43-013-30966	UTE TRIBAL 1-20	14-20-H62-3529
43-013-32414	UTE TRIBAL 1-20-55	14-20-H62-5018
43-013-32369	UTE TRIBAL 12-14-54	14-20-H62-5033

43-013-50476	UTE TRIBAL 12-14D-55	14-20-H62-4661
43-013-32205	UTE TRIBAL 12-15	14-20-H62-5017
43-013-32981	UTE TRIBAL 12-15-55	14-20-H62-3413
43-013-33131	UTE TRIBAL 12-16-54	14-20-H62-4919
43-013-32146	UTE TRIBAL 12-17	14-20-H62-5035
43-013-33077	UTE TRIBAL 12-18-54	14-20-H62-3528
43-013-32716	UTE TRIBAL 12-19-54	14-20-H62-3529
43-013-32866	UTE TRIBAL 12-20-54	14-20-H62-3414
43-013-32385	UTE TRIBAL 12-21-54	14-20-H62-4825
43-013-33694	UTE TRIBAL 12-21D-55	14-20-H62-4754
43-013-32616	UTE TRIBAL 12-22-55	14-20-H62-3443
43-013-33908	UTE TRIBAL 12-23D-55	14-20-H62-4749
43-013-33134	UTE TRIBAL 12-24D-55	14-20-H62-4749
43-013-32769	UTE TRIBAL 12-25-55	14-20-H62-3537
43-013-33801	UTE TRIBAL 12-26D-54	14-20-H62-3444
43-013-34118	UTE TRIBAL 12-26D-55	14-20-H62-4740
43-013-32765	UTE TRIBAL 12-28-54	14-20-H62-5019
43-013-33645	UTE TRIBAL 12-28D-55	14-20-H62-5036
43-013-32572	UTE TRIBAL 12-29-54	14-20-H62-5020
43-013-33418	UTE TRIBAL 12-29D-55	14-20-H62-5020
43-013-33215	UTE TRIBAL 1-22D-54	14-20-H62-3415
43-013-33626	UTE TRIBAL 1-22D-55	14-20-H62-4754
43-013-33907	UTE TRIBAL 12-31D-54	14-20-H62-4946
43-013-32925	UTE TRIBAL 12-32-54	14-20-H62-4947
43-013-33266	UTE TRIBAL 12-32-55	14-20-H62-5026
43-013-33090	UTE TRIBAL 12-33-54	14-20-562-4948
43-013-32524	UTE TRIBAL 1-23-55	14-20-H62-3443
43-013-33782	UTE TRIBAL 12-35D-55	14-20-H62-4945
43-013-32354	UTE TRIBAL 12-36-55	14-20-H62-4944
43-013-32259	UTE TRIBAL 1-24-55	14-20-H62-4749
43-013-31912	UTE TRIBAL 1-26	14-20-H62-3444
43-013-33680	UTE TRIBAL 1-26D-54	14-20-H62-4943
43-013-32416	UTE TRIBAL 1-27-55	14-20-H62-4753
43-013-31549	UTE TRIBAL 1-28	14-20-H62-4740
43-013-33784	UTE TRIBAL 1-28D-55	14-20-H62-5019
43-013-33184	UTE TRIBAL 12Q-25-55	14-20-H62-3537
43-013-32599	UTE TRIBAL 13-13-55	14-20-H62-4845
43-013-33364	UTE TRIBAL 13-14-54	14-20-H62-5033
43-013-32600	UTE TRIBAL 13-14-55	14-20-H62-5016
43-013-32526	UTE TRIBAL 1-31-54	14-20-H62-4946
43-013-32602	UTE TRIBAL 13-15-55	14-20-H62-5017
43-013-33039	UTE TRIBAL 13-15D-54	14-20-H662-4661
43-013-32511	UTE TRIBAL 13-16-54	14-20-H62-3413
43-013-31546	UTE TRIBAL 13-17	14-20-H62-4919
43-013-32571	UTE TRIBAL 13-18-54	14-20-H62-5032
43-013-31284	UTE TRIBAL 13-19	14-20-H62-3528
43-013-32206	UTE TRIBAL 13-20	14-20-H62-3529
43-013-32841	UTE TRIBAL 13-20-55	14-20-H62-5018
43-013-33113	UTE TRIBAL 13-21-54	14-20-H62-3414

43-013-31548	UTE TRIBAL 13-22	14-20-H62-3415
43-013-33716	UTE TRIBAL 13-22D-55	14-20-H62-4754
43-013-32513	UTE TRIBAL 13-23-55	14-20-H62-3443
43-013-31910	UTE TRIBAL 13-24	14-20-H62-4749
43-013-32169	UTE TRIBAL 13-25	14-20-H62-3537
43-013-32891	UTE TRIBAL 13-26-54	14-20-H62-4954
43-013-34002	UTE TRIBAL 13-26D-55	14-20-H62-3444
43-013-32387	UTE TRIBAL 13-28-54	14-20-H62-4740
43-013-33646	UTE TRIBAL 13-28D-55	14-20-H62-5019
43-013-32564	UTE TRIBAL 13-29-54	14-20-H62-5032
43-013-33501	UTE TRIBAL 1-31-55	14-20-H62-5060
43-013-30872	UTE TRIBAL 1-32R	14-20-H62-4947
43-013-32185	UTE TRIBAL 1-33	14-20-H62-4948
43-013-32409	UTE TRIBAL 13-30-54	14-20-H62-4662
43-013-32688	UTE TRIBAL 13-31-54	14-20-H62-4946
43-013-32692	UTE TRIBAL 13-32-54	14-20-H62-4947
43-013-32742	UTE TRIBAL 13-33-54	14-20-H62-4948
43-013-32806	UTE TRIBAL 13-35-54	14-20-H62-5053
43-013-34117	UTE TRIBAL 13-35D-55	14-20-H62-4945
43-013-33624	UTE TRIBAL 13-36D-55	14-20-H62-4944
43-013-32186	UTE TRIBAL 1-34	14-20-H62-4955
43-013-50408	UTE TRIBAL 1-34D-55	14-20-H62-5028
43-013-32567	UTE TRIBAL 1-35-54	14-20-H62-5032
43-013-33967	UTE TRIBAL 1-35D-55	14-20-H62-4945
43-013-32760	UTE TRIBAL 1-36-55	14-20-H62-4944
43-013-33380	UTE TRIBAL 13H-16-55	14-20-H62-5024
43-013-33112	UTE TRIBAL 14-14-54	14-20-H62-5033
43-013-32979	UTE TRIBAL 14-15-55	14-20-H62-5017
43-013-33123	UTE TRIBAL 14-16-54	14-20-H62-3413
43-013-32147	UTE TRIBAL 14-17	14-20-H62-4919
43-013-32984	UTE TRIBAL 14-18-55	14-20-H62-5057
43-013-32690	UTE TRIBAL 14-19-54	14-20-H62-3528
43-013-32702	UTE TRIBAL 14-20-54	14-20-H62-3529
43-013-32384	UTE TRIBAL 14-21-54	14-20-H62-3414
43-013-32593	UTE TRIBAL 14-22-54	14-20-H62-3415
43-013-33717	UTE TRIBAL 14-22D-55	14-20-H62-4754
43-013-33915	UTE TRIBAL 14-23D-55	14-20-H62-3443
43-013-33912	UTE TRIBAL 14-24D-55	14-20-H62-4749
43-013-32988	UTE TRIBAL 14-24-56	14-20-H62-5064
43-013-33912	UTE TRIBAL 14-24D-55	14-20-H62-4749
43-013-32776	UTE TRIBAL 14-25-54	14-20-H62-3440
43-013-32750	UTE TRIBAL 14-25-55	14-20-H62-3537
43-013-33673	UTE TRIBAL 14-26D-54	14-20-H62-4954
43-013-33361	UTE TRIBAL 14-26D-55	14-20-H62-3444
43-013-33684	UTE TRIBAL 14-27D-55	14-20-H62-4753
43-013-32348	UTE TRIBAL 14-28-55	14-20-H62-5019
43-013-33278	UTE TRIBAL 14-28D-54	14-20-H62-5036
43-013-33042	UTE TRIBAL 14-31D-54	14-20-H62-4946
43-013-32523	UTE TRIBAL 14-32-54	14-20-H62-4947

43-013-33093	UTE TRIBAL 14-33-54	14-20-H62-4949
43-013-33955	UTE TRIBAL 14-35D-55	14-20-H62-4945
43-013-32355	UTE TRIBAL 14-36-55	14-20-H62-4944
43-013-33277	UTE TRIBAL 14Q-28-54	14-20-H62-4740
43-013-33479	UTE TRIBAL 14Q-30-54	14-20-H62-4662
43-013-33212	UTE TRIBAL 15-13D-55	14-20-H62-4845
43-013-32971	UTE TRIBAL 15-15-54	14-20-H62-4661
43-013-32855	UTE TRIBAL 15-15-55	14-20-H62-5017
43-013-31648	UTE TRIBAL 15-16	14-20-H62-3413
43-013-31649	UTE TRIBAL 15-17	14-20-H62-4731
43-013-32358	UTE TRIBAL 15-17-55	14-20-H62-5025
43-013-32148	UTE TRIBAL 15-18	14-20-H62-4919
43-013-31832	UTE TRIBAL 15-19	14-20-H62-3528
43-013-32386	UTE TRIBAL 15-20-54	14-20-H62-3529
43-013-33357	UTE TRIBAL 15-21-55	14-20-H62-3414
43-013-32617	UTE TRIBAL 15-22-55	14-20-H62-4754
43-013-34116	UTE TRIBAL 15-22D-54	14-20-H62-3415
43-013-31671	UTE TRIBAL 15-23	14-20-H62-3443
43-013-31129	UTE TRIBAL 15-24R	14-20-H62-4749
43-013-32271	UTE TRIBAL 15-25-55	14-20-H62-3537
43-013-33768	UTE TRIBAL 15-26D-54	14-20-H62-4954
43-013-33362	UTE TRIBAL 15-26D-55	14-20-H62-3444
43-013-32339	UTE TRIBAL 15-27-55	14-20-H62-4753
43-013-32389	UTE TRIBAL 15-28-54	14-20-H62-4740
43-013-32561	UTE TRIBAL 15-29-54	14-20-H62-5036
43-013-32382	UTE TRIBAL 15-30-54	14-20-H62-4662
43-013-32743	UTE TRIBAL 15-31-54	14-20-H62-4946
43-013-32666	UTE TRIBAL 15-32-54	14-20-H62-4947
43-013-32768	UTE TRIBAL 15-33-54	14-20-H62-4948
43-013-32804	UTE TRIBAL 15-35-54	14-20-H62-5053
43-013-33954	UTE TRIBAL 15-35D-55	14-20-H62-4945
43-013-33049	UTE TRIBAL 15-36-55	14-20-H62-4944
43-013-33327	UTE TRIBAL 16-13D-55	14-20-H62-4845
43-013-32272	UTE TRIBAL 16-14-55	14-20-H62-5016
43-013-32588	UTE TRIBAL 16-15-54	14-20-H62-4661
43-013-32757	UTE TRIBAL 16-16-55	14-20-H62-5024
43-013-33132	UTE TRIBAL 16-17-54	14-20-H62-4731
43-013-31650	UTE TRIBAL 16-18	14-20-H62-4919
43-013-32691	UTE TRIBAL 16-19-54	14-20-H62-3528
43-013-32739	UTE TRIBAL 16-20-54	14-20-H62-3529
43-013-32381	UTE TRIBAL 16-21-54	14-20-H62-3414
43-013-32842	UTE TRIBAL 16-22-54	14-20-H62-3415
43-013-33267	UTE TRIBAL 16-22D-55	14-20-H62-4754
43-013-33046	UTE TRIBAL 16-23-55	14-20-H-62-3443
43-013-32775	UTE TRIBAL 16-24-54	14-20-H62-4716
43-013-32672	UTE TRIBAL 16-24-55	14-20-H62-3440
43-013-32759	UTE TRIBAL 16-25-55	14-20-H62-3537
43-013-34042	UTE TRIBAL 16-26-54	14-20-H62-4954
43-013-33965	UTE TRIBAL 16-26D-55	14-20-H62-3444

43-013-33786	UTE TRIBAL 16-27D-55	14-20-H62-4753
43-013-33041	UTE TRIBAL 16-28D-54	14-20-H62-4740
43-013-33076	UTE TRIBAL 16-29-54	14-20-H62-5036
43-013-32349	UTE TRIBAL 16-29-55	14-20-H62-5020
43-013-32665	UTE TRIBAL 16-3-54	14-20-H62-4778
43-013-32718	UTE TRIBAL 16-30-54	14-20-H62-4662
43-013-33326	UTE TRIBAL 16-31D-54	14-20-H62-4946
43-013-32926	UTE TRIBAL 16-32D-54	14-20-H62-4947
43-013-33091	UTE TRIBAL 16-33-54	14-20-H62-4948
43-013-32352	UTE TRIBAL 16-35-55	14-20-H62-4945
43-013-32356	UTE TRIBAL 16-36-55	14-20-H62-4944
43-013-33393	UTE TRIBAL 1A-29-54	14-20-H62-5036
43-013-33186	UTE TRIBAL 1I-36-55	14-20-H62-4944
43-013-33111	UTE TRIBAL 2-14-54	14-20-H962-5033
43-013-32140	UTE TRIBAL 2-19	14-20-H62-4919
43-013-32974	UTE TRIBAL 2-20-54	14-20-H62-3529
43-013-33117	UTE TRIBAL 2-21-55	14-20-H62-4825
43-013-32591	UTE TRIBAL 2-22-54	14-20-H62-3415
43-013-32604	UTE TRIBAL 2-22-55	14-20-H62-4754
43-013-33045	UTE TRIBAL 2-23-55	14-20-H62-3443
43-013-32569	UTE TRIBAL 2-24-54	14-20-H62-4716
43-013-31833	UTE TRIBAL 2-25	14-20-H62-3537
43-013-32868	UTE TRIBAL 2-26-54	14-20-H62-4954
43-013-33979	UTE TRIBAL 2-26D-55	14-20-H62-3444
43-013-32179	UTE TRIBAL 2-27	14-20-H62-3375
43-013-33628	UTE TRIBAL 2-27D-55	14-20-H62-4753
43-013-32763	UTE TRIBAL 2-28-54	14-20-H62-4740
43-013-33714	UTE TRIBAL 2-29D-55	14-20-H62-5036
43-013-32680	UTE TRIBAL 2-30-55	14-20-H62-5059
43-013-32894	UTE TRIBAL 2-30D-54	14-20-H62-4662
43-013-32762	UTE TRIBAL 2-31-54	14-20-H62-4946
43-013-32935	UTE TRIBAL 2-31-55	14-20-H62-5060
43-013-32803	UTE TRIBAL 2-32-54	14-20-H62-4947
43-013-32350	UTE TRIBAL 2-32-55	14-20-H62-5026
43-013-32898	UTE TRIBAL 2-33D-54	14-20-H62-4948
43-013-32187	UTE TRIBAL 2-35	14-20-H62-4945
43-013-32422	UTE TRIBAL 2-36-55	14-20-H62-4944
43-013-32663	UTE TRIBAL 3-10-54	14-20-H62-5517
43-013-50478	UTE TRIBAL 3-14-55	14-20-H62-5016
43-013-50389	UTE TRIBAL 3-14D-54	14-20-H62-5033
43-013-31830	UTE TRIBAL 3-19	14-20-H62-3528
43-013-32377	UTE TRIBAL 3-20-54	14-20-H62-4919
43-013-32867	UTE TRIBAL 3-21-54	14-20-H62-3414
43-013-32758	UTE TRIBAL 3-21-55	14-20-H62-4825
43-013-33208	UTE TRIBAL 3-22-54	14-20-H62-3415
43-013-32605	UTE TRIBAL 3-22-55	14-20-H62-4754
43-013-32536	UTE TRIBAL 3-23-55	14-20-H62-3443
43-013-30960	UTE TRIBAL 3-24R-55 (REENTRY)	14-20-H62-4749
43-013-31834	UTE TRIBAL 3-25	14-20-H62-3537

43-013-32993	UTE TRIBAL 3-25-56	14-20-H62-5065
43-013-33681	UTE TRIBAL 3-26D-54	14-20-H62-4954
43-013-32417	UTE TRIBAL 3-27-55	14-20-H62-4753
43-013-32261	UTE TRIBAL 3-28-54	14-20-H62-4740
43-013-33723	UTE TRIBAL 3-29-55	14-20-H62-5020
43-013-32625	UTE TRIBAL 3-30-54	14-20-H62-4662
43-013-32862	UTE TRIBAL 3-30-55	14-20-H62-5059
43-013-32527	UTE TRIBAL 3-31-54	14-20-H62-4946
43-013-32410	UTE TRIBAL 3-32-54	14-20-H62-4947
43-013-33363	UTE TRIBAL 3-32D-55	14-20-H62-5206
43-013-32412	UTE TRIBAL 3-33-54	14-20-H62-4948
43-013-33888	UTE TRIBAL 3-35D-55	14-20-H62-5053
43-013-33888	UTE TRIBAL 3-35D-55	14-20-H62-4945
43-013-32751	UTE TRIBAL 3-36-55	14-20-H62-4944
43-013-33185	UTE TRIBAL 3G-31-54	14-20-H62-4946
43-013-33270	UTE TRIBAL 4-14D-54	14-20-H62-5033
43-013-32972	UTE TRIBAL 4-19-54	14-20-H62-3528
43-013-32621	UTE TRIBAL 4-20-54	14-20-H62-4919
43-013-33549	UTE TRIBAL 4-20D-55	14-20-H62-5018
43-013-32378	UTE TRIBAL 4-21-54	14-20-H62-3414
43-013-33044	UTE TRIBAL 4-22-55	14-20-H62-4754
43-013-33627	UTE TRIBAL 4-23D-55	14-20-H62-3443
43-013-32573	UTE TRIBAL 4-24-54	14-20-H62-4716
43-013-33726	UTE TRIBAL 4-24D-55	14-20-H62-4749
43-013-32928	UTE TRIBAL 4-25-55	14-20-H62-3537
43-013-33595	UTE TRIBAL 4-26D-54	14-20-H62-4954
43-013-33978	UTE TRIBAL 4-26D-55	14-20-H62-3444
43-013-33797	UTE TRIBAL 4-27D-55	14-20-H62-4753
43-013-32741	UTE TRIBAL 4-28-54	14-20-H62-4740
43-013-33118	UTE TRIBAL 4-28-55	14-20-H62-5019
43-013-32565	UTE TRIBAL 4-29-54	14-20-H62-5036
43-013-31550	UTE TRIBAL 4-30	14-20-H62-4662
43-013-32767	UTE TRIBAL 4-31-54	14-20-H62-4946
43-013-32896	UTE TRIBAL 4-32-54	14-20-H62-4947
43-013-33379	UTE TRIBAL 4-32-55	14-20-H62-5026
43-013-32871	UTE TRIBAL 4-33-54	14-20-H62-4948
43-013-32357	UTE TRIBAL 4-33-55	14-20-H62-5027
43-013-32188	UTE TRIBAL 4-36	14-20-H62-4944
43-013-31152	UTE TRIBAL 5-13	14-20-H62-4845
43-013-33075	UTE TRIBAL 5-13-54	14-20-H62-4894
43-013-33619	UTE TRIBAL 5-14-54	14-20-H62-5033
43-013-50479	UTE TRIBAL 5-14-55	14-20-H62-5016
43-013-32344	UTE TRIBAL 5-15-55	14-20-H62-5017
43-013-50475	UTE TRIBAL 5-16D-54	14-20-H62-3413
43-013-32204	UTE TRIBAL 5-19	14-20-H62-3528
43-013-31651	UTE TRIBAL 5-20	14-20-H62-4919
43-013-33324	UTE TRIBAL 5-21-54	14-20-H62-3414
43-013-33706	UTE TRIBAL 5-21D-55	14-20-H62-4825
43-013-32624	UTE TRIBAL 5-22-54	14-20-H62-3415

43-013-32537	UTE TRIBAL 5-23-55	14-20-H62-3443
43-013-32263	UTE TRIBAL 5-24-55	14-20-H62-4749
43-013-32992	UTE TRIBAL 5-25-56	14-20-H62-5065
43-013-33421	UTE TRIBAL 5-25D-55	14-20-H62-3537
43-013-32890	UTE TRIBAL 5-26-54	14-20-H62-4954
43-013-32264	UTE TRIBAL 5-26-55	14-20-H62-3444
43-013-32614	UTE TRIBAL 5-27-55	14-20-H62-4753
43-013-32189	UTE TRIBAL 5-28	14-20-H62-4740
43-013-32525	UTE TRIBAL 5-29-54	14-20-H62-5032
43-013-32380	UTE TRIBAL 5-30-54	14-20-H62-4662
43-013-32190	UTE TRIBAL 5-31	14-20-H62-4946
43-013-32539	UTE TRIBAL 5-32-54	14-20-H62-4947
43-013-32521	UTE TRIBAL 5-33-54	14-20-H62-4948
43-013-32805	UTE TRIBAL 5-35-54	14-20-H62-5053
43-013-32930	UTE TRIBAL 5-36-55	14-20-H62-4944
43-013-32586	UTE TRIBAL 6-14-54	14-20-H62-5033
43-013-50246	UTE TRIBAL 6-14D-55	14-20-H62-5016
43-013-32865	UTE TRIBAL 6-19-54	14-20-H62-3528
43-013-32622	UTE TRIBAL 6-20-54	14-20-H62-4919
43-013-32164	UTE TRIBAL 6-21	14-20-H62-3414
43-013-32163	UTE TRIBAL 6-22	14-20-H62-3415
43-013-33213	UTE TRIBAL 6-22D-55	14-20-H62-4728
43-013-33187	UTE TRIBAL 6-23D-55	14-20-H62-3443
43-013-32570	UTE TRIBAL 6-24-54	14-20-H62-4716
43-013-32143	UTE TRIBAL 6-25H	14-20-H62-3537
43-013-33625	UTE TRIBAL 6-26D-54	14-20-H62-4954
43-013-33476	UTE TRIBAL 6-26D-55	14-20-H62-3444
43-013-32892	UTE TRIBAL 6-28D-54	14-20-H62-4740
43-013-33172	UTE TRIBAL 6-29-54	14-20-H62-5036
43-013-33120	UTE TRIBAL 6-29-55	14-20-H62-5020
43-013-32783	UTE TRIBAL 6-30-55	14-20-H62-5059
43-013-33325	UTE TRIBAL 6-31D-54	14-20-H62-4946
43-013-32420	UTE TRIBAL 6-32-55	14-20-H62-5026
43-013-32897	UTE TRIBAL 6-32D-54	14-20-H62-4947
43-013-32872	UTE TRIBAL 6-33-54	14-20-H62-4948
43-013-34028	UTE TRIBAL 6-35D-55	14-20-H62-4945
43-013-32265	UTE TRIBAL 6-36-55	14-20-H62-4944
43-013-50409	UTE TRIBAL 7-14-54	14-20-H62-5033
43-013-33269	UTE TRIBAL 7-14-55	14-20-H62-5016
43-013-32976	UTE TRIBAL 7-15-55	14-20-H62-5017
43-013-33130	UTE TRIBAL 7-16-54	14-20-H62-3413
43-013-32863	UTE TRIBAL 7-19-55	14-20-H62-5058
43-013-32346	UTE TRIBAL 7-20-55	14-20-H62-5018
43-013-31281	UTE TRIBAL 7-20R-54	14-20-H62-3529
43-013-32623	UTE TRIBAL 7-21-54	14-20-H62-3414
43-013-32761	UTE TRIBAL 7-22-54	14-20-H62-3415
43-013-33721	UTE TRIBAL 7-22D-55	14-20-H62-4754
43-013-32514	UTE TRIBAL 7-23-55	14-20-H62-3443
43-013-32991	UTE TRIBAL 7-24-56	14-20-H62-5064

43-013-32991	UTE TRIBAL 7-25-56	14-20-H62-5065
43-013-33621	UTE TRIBAL 7-26D-54	14-20-H62-4954
43-013-33477	UTE TRIBAL 7-26D-55	14-20-H62-3444
43-013-32418	UTE TRIBAL 7-27-55	14-20-H62-4753
43-013-32166	UTE TRIBAL 7-28	14-20-H62-4740
43-013-33788	UTE TRIBAL 7-28D-55	14-20-H62-5019
43-013-32562	UTE TRIBAL 7-29-54	14-20-H62-5036
43-013-33715	UTE TRIBAL 7-29D-55	14-20-H62-5020
43-013-32167	UTE TRIBAL 7-30	14-20-H62-4662
43-013-32528	UTE TRIBAL 7-31-54	14-20-H62-4946
43-013-32411	UTE TRIBAL 7-32-54	14-20-H62-4947
43-013-32413	UTE TRIBAL 7-33-54	14-20-H62-4948
43-013-50510	UTE TRIBAL 7-34-55	14-20-H62-5028
43-013-32774	UTE TRIBAL 7-35-54	14-20-H62-5053
43-013-33048	UTE TRIBAL 7-35-55	14-20-H62-4945
43-013-32929	UTE TRIBAL 7-36-55	14-20-H62-4944
43-013-50852	UTE TRIBAL 7I-21-54	14-20-H62-3414
43-013-50488	UTE TRIBAL 8-10D-54	14-20-H62-5517
43-013-33204	UTE TRIBAL 8-14-54	14-20-H62-5033
43-013-50477	UTE TRIBAL 8-15D-55	14-20-H62-5017
43-013-32840	UTE TRIBAL 8-19-54	14-20-H62-3528
43-013-32864	UTE TRIBAL 8-19-55	14-20-H62-5058
43-013-32973	UTE TRIBAL 8-20-54	14-20-H62-3529
43-013-50435	UTE TRIBAL 8-21D-55	14-20-H62-4825
43-013-32590	UTE TRIBAL 8-22-54	14-20-H62-3415
43-013-33552	UTE TRIBAL 8-23D-55	14-20-H62-3443
43-013-33420	UTE TRIBAL 8-24-55	14-20-H62-4716
43-013-32780	UTE TRIBAL 8-25-54	14-20-H62-3440
43-013-32620	UTE TRIBAL 8-25-55	14-20-H62-3537
43-013-33682	UTE TRIBAL 8-26D-54	14-20-H62-4954
43-013-33859	UTE TRIBAL 8-26D-55	14-20-H62-3444
43-013-34058	UTE TRIBAL 8-27D-55	14-20-H62-4753
43-013-32766	UTE TRIBAL 8-28-54	14-20-H62-4740
43-013-32694	UTE TRIBAL 8-28-55	14-20-H62-5019
43-013-33119	UTE TRIBAL 8-29-55	14-20-H62-5020
43-013-32746	UTE TRIBAL 8-30-54	14-20-H62-4662
43-013-32869	UTE TRIBAL 8-31-54	14-20-H62-4946
43-013-32673	UTE TRIBAL 8-31-55	14-20-H62-5032
43-013-32870	UTE TRIBAL 8-32-54	14-20-H62-4947
43-013-32421	UTE TRIBAL 8-32-55	14-20-H62-5026
43-013-33089	UTE TRIBAL 8-33-54	14-20-H62-4948
43-013-50436	UTE TRIBAL 8-34D-55	14-20-H62-5028
43-013-32267	UTE TRIBAL 8-35-55	14-20-H62-4945
43-013-32423	UTE TRIBAL 8-36-55	14-20-H62-4944
43-013-50853	UTE TRIBAL 8L-21D-54	14-20-H62-3141
43-013-33328	UTE TRIBAL 9-13D-55	14-20-H62-4845
43-013-33796	UTE TRIBAL 9-14D-54	14-20-H62-5033
43-013-32701	UTE TRIBAL 9-15-55	14-20-H62-5017
43-013-33207	UTE TRIBAL 9-16-54	14-20-H62-3413

43-013-32687	UTE TRIBAL 9-17-54	14-20-H62-4731
43-013-32144	UTE TRIBAL 9-18	14-20-H62-4919
43-013-31831	UTE TRIBAL 9-19	14-20-H62-3528
43-013-32379	UTE TRIBAL 9-20-54	14-20-H62-3529
43-013-33675	UTE TRIBAL 9-20D-55	14-20-H62-5018
43-013-33040	UTE TRIBAL 9-21-54	14-20-H62-3414
43-013-32889	UTE TRIBAL 9-22-54	14-20-H62-3415
43-013-32606	UTE TRIBAL 9-22-55	14-20-H62-4754
43-013-32268	UTE TRIBAL 9-24-55	14-20-H62-4749
43-013-32390	UTE TRIBAL 9-25-55	14-20-H62-3537
43-013-32191	UTE TRIBAL 9-26	14-20-H62-4728
43-013-33359	UTE TRIBAL 9-26D-55	14-20-H62-3444
43-013-32388	UTE TRIBAL 9-28-54	14-20-H62-4740
43-013-33787	UTE TRIBAL 9-28D-55	14-20-H62-5019
43-013-32566	UTE TRIBAL 9-29-54	14-20-H62-5036
43-013-32383	UTE TRIBAL 9-30-54	14-20-H62-4662
43-013-32529	UTE TRIBAL 9-31-54	14-20-H62-4946
43-013-33508	UTE TRIBAL 9-31-55	14-20-H62-5060
43-013-32538	UTE TRIBAL 9-32-54	14-20-H62-4947
43-013-32549	UTE TRIBAL 9-33-54	14-20-H62-4948
43-013-32781	UTE TRIBAL 9-35-54	14-20-H62-5053
43-013-33047	UTE TRIBAL 9-35-55	14-20-H62-4945
43-013-33239	UTE TRIBAL 9-36D-55	14-20-H62-4944
43-013-33276	UTE TRIBAL 9S-19-54	14-20-H62-3528
43-013-33245	UTE TRIBAL 9S-25-55	14-20-H62-3537
43-013-50997	Vieira Tribal 4-4-54	14-20-H62-5659
43-013-33122	WILCOX ELIASON 7-15-56	FEE
43-013-33150	WILCOX FEE 1-20-56	FEE
43-013-33151	WILCOX FEE 15-16-56	FEE
43-013-32550	WILLIAMSON TRIBAL 3-34-54	14-20-H62-4955
43-013-32551	WILLIAMSON TRIBAL 5-34-54	14-20-H62-4955
43-013-31311	Z and T UTE TRIBAL 12-22	14-20-H62-3415
43-013-31280	Z and T UTE TRIBAL 2-21	14-20-H62-3414
43-013-31282	Z and T UTE TRIBAL 7-19	14-20-H62-4919
43-013-31310	Z and T UTE TRIBAL 7-25	14-20-H62-3537

Division of Oil, Gas and Mining

OPERATOR CHANGE WORKSHEET (for state use only)

ROUTING
CDW

X - Change of Operator (Well Sold) Operator Name Change/Merger

The operator of the well(s) listed below has changed, effective: **6/1/2014**

FROM: (Old Operator):	**TO:** (New Operator):
Berry Petroelum Company, LLC N4075	Linn Operating, Inc. N4115
1999 Broadway Street , Suite 3700	1999 Broadway Street, Suite 3700
Denver, CO 80202	Denver, CO 80202
Phone: 1 (303) 999-4400	Phone: 1 (303) 999-4400

CA No. **Unit:** **Berry Pilot EOR 246-02 Brundage Canyon**

WELL NAME	SEC	TWN	RNG	API NO	ENTITY NO	LEASE TYPE	WELL TYPE	WELL STATUS
See Attached List								

OPERATOR CHANGES DOCUMENTATION

Enter date after each listed item is completed

1. (R649-8-10) Sundry or legal documentation was received from the **FORMER** operator on: 6/13/2014
2. (R649-8-10) Sundry or legal documentation was received from the **NEW** operator on: 6/13/2014
3. The new company was checked on the **Department of Commerce, Division of Corporations Database on:** 6/17/2014

4a. Is the new operator registered in the State of Utah: _____ Business Number: 9031632-0143

5a. (R649-9-2)Waste Management Plan has been received on: N/A

5b. Inspections of LA PA state/fee well sites complete on: Yes

5c. Reports current for Production/Disposition & Sundries on: 6/17/2014

6. **Federal and Indian Lease Wells:** The BLM and or the BIA has approved the merger, name change, or operator change for all wells listed on Federal or Indian leases on: BLM Not Yet BIA Not Yet
7. **Federal and Indian Units:**
   The BLM or BIA has approved the successor of unit operator for wells listed on: Not Yet
8. **Federal and Indian Communization Agreements ("CA"):**
   The BLM or BIA has approved the operator for all wells listed within a CA on: N/A
9. **Underground Injection Control ("UIC")** Division has approved UIC Form 5 Transfer of Authority to **Inject,** for the enhanced/secondary recovery unit/project for the water disposal well(s) listed on: N/A

DATA ENTRY:

1. Changes entered in the **Oil and Gas Database on:** 6/18/2014
2. Changes have been entered on the **Monthly Operator Change Spread Sheet on:** 6/18/2014
3. Bond information entered in RBDMS on: 6/23/2014
4. Fee/State wells attached to bond in RBDMS on: 6/23/2014
5. Injection Projects to new operator in RBDMS on: N/A
6. Receipt of Acceptance of Drilling Procedures for APD/New on: 6/18/2014
7. Surface Agreement Sundry from **NEW** operator on Fee Surface wells received on: Yes

BOND VERIFICATION:

1. Federal well(s) covered by Bond Number: NMB000501
2. Indian well(s) covered by Bond Number: NMB000501

3a. (R649-3-1) The **NEW** operator of any state/fee well(s) listed covered by Bond Number LPM9149893

3b. The **FORMER** operator has requested a release of liability from their bond on: N/A

LEASE INTEREST OWNER NOTIFICATION:

4. (R649-2-10) The **NEW** operator of the fee wells has been contacted and informed by a letter from the Division of their responsibility to notify all interest owners of this change on: 6/23/2014

COMMENTS:

FORM 9

STATE OF UTAH
DEPARTMENT OF NATURAL RESOURCES
DIVISION OF OIL, GAS AND MINING

5. LEASE DESIGNATION AND SERIAL NUMBER: See attached list

SUNDRY NOTICES AND REPORTS ON WELLS

6. IF INDIAN, ALLOTTEE OR TRIBE NAME:

Do not use this form for proposals to drill new wells, significantly deepen existing wells below current bottom-hole depth, reenter plugged wells, or to drill horizontal laterals. Use APPLICATION FOR PERMIT TO DRILL form for such proposals.

7. UNIT or CA AGREEMENT NAME:

1. TYPE OF WELL: OIL WELL ☑ GAS WELL ☐ OTHER _____

8. WELL NAME and NUMBER:

2. NAME OF OPERATOR: Linn Operating, Inc.

9. API NUMBER:

3. ADDRESS OF OPERATOR: 1999 Broadway, Ste 3700 CITY Denver STATE CO ZIP 80202 PHONE NUMBER: (303) 999-4400

10. FIELD AND POOL, OR WILDCAT:

4. LOCATION OF WELL

FOOTAGES AT SURFACE:

COUNTY:

QTR/QTR, SECTION, TOWNSHIP, RANGE, MERIDIAN:

STATE: UTAH

11. CHECK APPROPRIATE BOXES TO INDICATE NATURE OF NOTICE, REPORT, OR OTHER DATA

TYPE OF SUBMISSION	TYPE OF ACTION		
☑ NOTICE OF INTENT (Submit in Duplicate)	☐ ACIDIZE	☐ DEEPEN	☐ REPERFORATE CURRENT FORMATION
Approximate date work will start: _____	☐ ALTER CASING	☐ FRACTURE TREAT	☐ SIDETRACK TO REPAIR WELL
	☐ CASING REPAIR	☐ NEW CONSTRUCTION	☐ TEMPORARILY ABANDON
	☐ CHANGE TO PREVIOUS PLANS	☐ OPERATOR CHANGE	☐ TUBING REPAIR
	☐ CHANGE TUBING	☐ PLUG AND ABANDON	☐ VENT OR FLARE
☐ SUBSEQUENT REPORT (Submit Original Form Only)	☐ CHANGE WELL NAME	☐ PLUG BACK	☐ WATER DISPOSAL
Date of work completion:	☐ CHANGE WELL STATUS	☐ PRODUCTION (START/RESUME)	☐ WATER SHUT-OFF
_____	☐ COMMINGLE PRODUCING FORMATIONS	☐ RECLAMATION OF WELL SITE	☑ OTHER: Change of operator
	☐ CONVERT WELL TYPE	☐ RECOMPLETE - DIFFERENT FORMATION	

12. DESCRIBE PROPOSED OR COMPLETED OPERATIONS. Clearly show all pertinent details including dates, depths, volumes, etc.

Notice of Change of Operator from Berry Petroleum Company, LLC to Linn Operating, Inc., effective June 1, 2014. On December 16, 2013, Berry Petroleum Company became an indirect subsidiary of Linn Energy, LLC. As a result, Berry Petroleum Company converted into a limited liability company named, "Berry Petroleum Company, LLC". On March 5, 2014, Berry Petroleum Company, LLC authorized and empowered Linn Operating, Inc. to act as operator on its behalf. I have attached a copy of the original declaration amending the name change along with a copy of the agency agreement and power of attorney for the operator change.

RECEIVED
JUN 1 3 2014
Div. of Oil, Gas & Mining

NAME (PLEASE PRINT) Beverly Decker TITLE Sr Engineering Technician

SIGNATURE Beverly Decker DATE 6/1/2014

(This space for State use only)

APPROVED
JUN 18 2014
DIV. OIL GAS & MINING
BY: Rachel Medina

(5/2000) (See Instructions on Reverse Side)

STATE OF UTAH
DEPARTMENT OF NATURAL RESOURCES
DIVISION OF OIL, GAS AND MINING

FORM 9

SUNDRY NOTICES AND REPORTS ON WELLS

Do not use this form for proposals to drill new wells, significantly deepen existing wells below current bottom-hole depth, reenter plugged wells, or to drill horizontal laterals. Use APPLICATION FOR PERMIT TO DRILL form for such proposals.

5. LEASE DESIGNATION AND SERIAL NUMBER: See attached list
6. IF INDIAN, ALLOTTEE OR TRIBE NAME:
7. UNIT or CA AGREEMENT NAME:
8. WELL NAME and NUMBER:
9. API NUMBER:
10. FIELD AND POOL, OR WILDCAT:

1. TYPE OF WELL: OIL WELL ☑ GAS WELL ☐ OTHER _____

2. NAME OF OPERATOR: Berry Petroleum Company, LLC

3. ADDRESS OF OPERATOR: 1999 Broadway, Ste 3700 CITY Denver STATE CO ZIP 80202 PHONE NUMBER: (303) 999-4400

4. LOCATION OF WELL
FOOTAGES AT SURFACE:
COUNTY:
QTR/QTR, SECTION, TOWNSHIP, RANGE, MERIDIAN:
STATE: UTAH

11. CHECK APPROPRIATE BOXES TO INDICATE NATURE OF NOTICE, REPORT, OR OTHER DATA

TYPE OF SUBMISSION	TYPE OF ACTION		
☑ NOTICE OF INTENT (Submit in Duplicate)	☐ ACIDIZE	☐ DEEPEN	☐ REPERFORATE CURRENT FORMATION
Approximate date work will start: _____	☐ ALTER CASING	☐ FRACTURE TREAT	☐ SIDETRACK TO REPAIR WELL
	☐ CASING REPAIR	☐ NEW CONSTRUCTION	☐ TEMPORARILY ABANDON
	☐ CHANGE TO PREVIOUS PLANS	☐ OPERATOR CHANGE	☐ TUBING REPAIR
	☐ CHANGE TUBING	☐ PLUG AND ABANDON	☐ VENT OR FLARE
☐ SUBSEQUENT REPORT (Submit Original Form Only)	☐ CHANGE WELL NAME	☐ PLUG BACK	☐ WATER DISPOSAL
Date of work completion: _____	☐ CHANGE WELL STATUS	☐ PRODUCTION (START/RESUME)	☐ WATER SHUT-OFF
	☐ COMMINGLE PRODUCING FORMATIONS	☐ RECLAMATION OF WELL SITE	☑ OTHER: Change of operator
	☐ CONVERT WELL TYPE	☐ RECOMPLETE - DIFFERENT FORMATION	

12. DESCRIBE PROPOSED OR COMPLETED OPERATIONS. Clearly show all pertinent details including dates, depths, volumes, etc.

On December 16th, 2013 Berry Petroleum Company and Linn Energy merged. As a result of this merger the companies name has changed to "Berry Petroleum Company, LLC". On March 5th, 2014 Berry Petroleum Company, LLC agreed that Linn Operating, Inc would become the operator of record effective June 1, 2014. I have attached a copy of the original declaration amending the name change along with a copy of the agency agreement and power of attorney for the operator change.

Should you have any questions please don't hesitate to contact me.

RECEIVED
JUN 1 3 2014
Div. of Oil, Gas & Mining

NAME (PLEASE PRINT): Beverly Decker TITLE: Sr Engineering Technician
SIGNATURE: Beverly Decker DATE: 6/1/2014

(This space for State use only)

APPROVED
JUN 18 2014
DIV. OIL GAS & MINING
BY: Rachel Medina

(5/2000) (See Instructions on Reverse Side)

STATE OF UTAH
DEPARTMENT OF NATURAL RESOURCES
DIVISION OF OIL, GAS AND MINING

Request to Transfer Application or Permit to Drill

(This form should accompany a Sundry Notice, Form 9, requesting APD transfer)

Well name:	See Attached
API number:	
Location:	Qtr-Qtr: Section Township Range:
Company that filed original application:	Berry Petroleum Company LLC
Date original permit was issued:	
Company that permit was issued to:	Linn Operating, Inc

Check one	Desired Action:
	Transfer pending (unapproved) Application for Permit to Drill to new operator
	The undersigned as owner with legal rights to drill on the property, hereby verifies that the information as submitted in the pending Application for Permit to Drill, remains valid and does not require revision. The new owner of the application accepts and agrees to the information and procedures as stated in the application.
✓	**Transfer approved Application for Permit to Drill to new operator**
	The undersigned as owner with legal rights to drill on the property as permitted, hereby verifies that the information as submitted in the previously approved application to drill, remains valid and does not require revision.

Following is a checklist of some items related to the application, which should be verified.	Yes	No
If located on private land, has the ownership changed?		✓
If so, has the surface agreement been updated?		
Have any wells been drilled in the vicinity of the proposed well which would affect the spacing or siting requirements for this location?		✓
Have there been any unit or other agreements put in place that could affect the permitting or operation of this proposed well?		✓
Have there been any changes to the access route including ownership or right-of-way, which could affect the proposed location?		✓
Has the approved source of water for drilling changed?		✓
Have there been any physical changes to the surface location or access route which will require a change in plans from what was discussed at the onsite evaluation?		✓
Is bonding still in place, which covers this proposed well? Bond No. LPM9149893	✓	

Any desired or necessary changes to either a pending or approved Application for Permit to Drill that is being transferred, should be filed on a Sundry Notice, Form 9, or amended Application for Permit to Drill, Form 3, as appropriate, with necessary supporting information as required.

Name (please print) Beverly Decker Title Sr Engineering Technician

Signature Beverly Decker Date

Representing (company name) Berry Petroleum Company LLC and Linn Operating, Inc

The person signing this form must have legal authority to represent the company or individual(s) to be listed as the new operator on the Application for Permit to Drill.

(3/2004)

STATE OF UTAH
DEPARTMENT OF NATURAL RESOURCES
DIVISION OF OIL, GAS AND MINING

Request to Transfer Application or Permit to Drill

(This form should accompany a Sundry Notice, Form 9, requesting APD transfer)

Well name:	See Attached
API number:	
Location:	Qtr-Qtr: Section: Township: Range:
Company that filed original application:	Berry Petroleum Company LLC
Date original permit was issued:	
Company that permit was issued to:	Linn Operating, Inc

Check one	Desired Action:
✓	**Transfer pending (unapproved) Application for Permit to Drill to new operator**
	The undersigned as owner with legal rights to drill on the property, hereby verifies that the information as submitted in the pending Application for Permit to Drill, remains valid and does not require revision. The new owner of the application accepts and agrees to the information and procedures as stated in the application.
	Transfer approved Application for Permit to Drill to new operator
	The undersigned as owner with legal rights to drill on the property as permitted, hereby verifies that the information as submitted in the previously approved application to drill, remains valid and does not require revision.

Following is a checklist of some items related to the application, which should be verified.	**Yes**	**No**
If located on private land, has the ownership changed?		✓
If so, has the surface agreement been updated?		
Have any wells been drilled in the vicinity of the proposed well which would affect the spacing or siting requirements for this location?		✓
Have there been any unit or other agreements put in place that could affect the permitting or operation of this proposed well?		✓
Have there been any changes to the access route including ownership or right-of-way, which could affect the proposed location?		✓
Has the approved source of water for drilling changed?		✓
Have there been any physical changes to the surface location or access route which will require a change in plans from what was discussed at the onsite evaluation?		✓
Is bonding still in place, which covers this proposed well? Bond No. LPM9149893	✓	

Any desired or necessary changes to either a pending or approved Application for Permit to Drill that is being transferred, should be filed on a Sundry Notice, Form 9, or amended Application for Permit to Drill, Form 3, as appropriate, with necessary supporting information as required.

Name (please print) Beverly Decker Title Sr Engineering Technician
Signature Beverly Decker Date
Representing (company name) Berry Petroleum Company LLC and Linn Operating, Inc

The person signing this form must have legal authority to represent the company or individual(s) to be listed as the new operator on the Application for Permit to Drill.

(3/2004)

Berry Petroleum Company, LLC N4075) to Linn Operating, Inc. (N4115)
Effective June 1, 2014

Well Name	Section	TWN	RNG	API Number	Entity	Mineral Lease	Well Type	Well Status	Unit
Z and T UTE TRIBAL 2-21	21	050S	040W	4301331280	11130	Indian	WI	A	BRUNDAGE CANYON
UTE TRIBAL 12-30-54	30	050S	040W	4301332747	14747	Indian	WI	A	BRUNDAGE CANYON
UTE TRIBAL 14-30-54	30	050S	040W	4301332748	14778	Indian	WI	A	BRUNDAGE CANYON
UTE TRIBAL 10-30D-54	30	050S	040W	4301332893	15246	Indian	WI	A	BRUNDAGE CANYON
UTE TRIBAL 6-30-54	30	050S	040W	4301332975	15300	Indian	WI	A	BRUNDAGE CANYON
UTE TRIBAL 1-21-54	21	050S	040W	4301333388	15937	Indian	WI	A	BRUNDAGE CANYON
UTE TRIBAL 13-17D-55	17	050S	050W	4301333550		Indian	OW	APD	
UTE TRIBAL 11-14D-54	14	050S	040W	4301333596		Indian	OW	APD	
UTE TRIBAL 16-17D-55	17	050S	050W	4301333622		Indian	OW	APD	
UTE TRIBAL 15-28D-55	28	050S	050W	4301333623		Indian	OW	APD	
LC TRIBAL 14-16D-56	16	050S	060W	4301334283		Indian	OW	APD	
FEDERAL 10-10D-65	10	060S	050W	4301350523		Federal	OW	APD	
LC TRIBAL 3-23D-56	23	050S	060W	4301350624		Indian	OW	APD	
FEDERAL 2-1D-64	1	060S	040W	4301350765		Federal	OW	APD	
FEDERAL 7-1D-64	1	060S	040W	4301350766		Federal	OW	APD	
FEDERAL 9-1D-64	1	060S	040W	4301350767		Federal	OW	APD	
LC TRIBAL 1-28D-56	28	050S	060W	4301350865		Indian	OW	APD	
LC TRIBAL 13H-9-56	10	050S	060W	4301350874		Indian	OW	APD	
CC FEE 8-24-38	24	030S	080W	4301350885		Fee	OW	APD	
LC TRIBAL 4H-26-56	26	050S	060W	4301350951		Indian	OW	APD	
LC FEE 4H-12-57	12	050S	070W	4301350952		Fee	OW	APD	
CC TRIBAL 4-2-48	2	040S	080W	4301350964		Indian	OW	APD	
LC TRIBAL 5H-34-45	34	040S	050W	4301350974		Indian	OW	APD	
LC TRIBAL 11-34-45	34	040S	050W	4301350975		Indian	OW	APD	
LC TRIBAL 7-2D-56	2	050S	060W	4301350988		Indian	OW	APD	
LC TRIBAL 10-18D-56	18	050S	060W	4301350989		Indian	OW	APD	
CC TRIBAL 4-30D-38	19	030S	080W	4301350993		Indian	OW	APD	
FEDERAL 4-1-65	1	060S	050W	4301351016		Federal	OW	APD	
LC TRIBAL 3-16D-56	16	050S	060W	4301351032		Indian	OW	APD	
CC FEE 6-21-38	21	030S	080W	4301351059		Fee	OW	APD	
LC TRIBAL 13H-28-45	28	040S	050W	4301351061		Indian	OW	APD	
LC TRIBAL 5H-23-45	23	040S	050W	4301351071		Indian	OW	APD	
LC TRIBAL 4H-27-45	27	040S	050W	4301351072		Indian	OW	APD	
LC TRIBAL 16-27-45	27	040S	050W	4301351074		Indian	OW	APD	
LC TRIBAL 12-27-45	27	040S	050W	4301351075		Indian	OW	APD	
LC TRIBAL 16-23-45	23	040S	050W	4301351077		Indian	OW	APD	
LC TRIBAL 12H-30-56	30	050S	060W	4301351133		Indian	OW	APD	
LC TRIBAL 5-29D-56	29	050S	060W	4301351184		Indian	OW	APD	
LC TRIBAL 12H-19-56	19	050S	060W	4301351193		Indian	OW	APD	
LC FEE 15-11D-56	11	050S	060W	4301351197		Fee	OW	APD	
LC TRIBAL 13H-10-56	11	050S	060W	4301351209		Indian	OW	APD	
LC TRIBAL 2-31D-45	31	040S	050W	4301351261		Indian	OW	APD	
LC TRIBAL 13H-24-45	24	040S	050W	4301351273		Indian	OW	APD	
UTE TRIBAL 6-21D-55	21	050S	050W	4301351274		Indian	OW	APD	
UTE TRIBAL 15-16D-55	16	050S	050W	4301351284		Indian	OW	APD	
UTE TRIBAL 4H-15-55	15	050S	050W	4301351292		Indian	OW	APD	
UTE TRIBAL 13H-14-54	14	050S	040W	4301351297		Indian	OW	APD	
UTE TRIBAL 1-32-55	32	050S	050W	4301351298		Indian	OW	APD	
UTE TRIBAL 4-21D-55	21	050S	050W	4301351299		Indian	OW	APD	
LC TRIBAL 12-33-45	33	040S	050W	4301351301		Indian	OW	APD	
UTE TRIBAL 16-15D-55	15	050S	050W	4301351302		Indian	OW	APD	
UTE TRIBAL 2-24-55	24	050S	050W	4301351304		Indian	OW	APD	
LC TRIBAL 11-32D-56	32	050S	060W	4301351315		Indian	OW	APD	
LC TRIBAL 1-32D-56	32	050S	060W	4301351317		Indian	OW	APD	
LC TRIBAL 5H-32-56	32	050S	060W	4301351318		Indian	OW	APD	
LC TRIBAL 5H-33-45	33	040S	050W	4301351338		Indian	OW	APD	
LC TRIBAL 14-28-45	28	040S	050W	4301351339		Indian	OW	APD	
LC TRIBAL 16-32D-45	32	040S	050W	4301351340		Indian	OW	APD	
LC TRIBAL 3-31-45	31	040S	050W	4301351347		Indian	OW	APD	
LC TRIBAL 1-18D-56	18	050S	060W	4301351367		Indian	OW	APD	
LC TRIBAL 9-18D-56	18	050S	060W	4301351368		Indian	OW	APD	
LC FEE 9-23D-56	23	050S	060W	4301351380		Fee	OW	APD	
LC TRIBAL 1-34D-45	34	040S	050W	4301351382		Indian	OW	APD	
LC TRIBAL 12-21D-56	21	050S	060W	4301351383		Indian	OW	APD	
LC TRIBAL 7-29D-56	29	050S	060W	4301351386		Indian	OW	APD	

UTE TRIBAL 6-15-55	15	050S	050W	4301351399		Indian	OW	APD	
UTE TRIBAL 13H-21-55	21	050S	050W	4301351403		Indian	OW	APD	
LC TRIBAL 6-16D-56	16	050S	060W	4301351406		Indian	OW	APD	
LC TRIBAL 3-14D-56	14	050S	060W	4301351408		Indian	OW	APD	
CC FEE 13-9D-37	9	030S	070W	4301351409		Fee	OW	APD	
CC FEE 16-21D-38	21	030S	080W	4301351410		Fee	OW	APD	
UTE TRIBAL 5H-10-54	10	050S	040W	4301351415		Indian	OW	APD	
LC TRIBAL 13-6D-57	6	050S	070W	4301351417		Indian	OW	APD	
LC TRIBAL 9-23-45	23	040S	050W	4301351432		Indian	OW	APD	
LC TRIBAL 5-28D-56	29	050S	060W	4301351441		Indian	OW	APD	
LC TRIBAL 15-20D-56	29	050S	060W	4301351443		Indian	OW	APD	
LC FEE 14-1-56	1	050S	060W	4301351457		Fee	OW	APD	
LC TRIBAL 5-3D-56	3	050S	060W	4301351459		Indian	OW	APD	
LC Tribal 16-33-45	33	040S	050W	4301351463		Indian	OW	APD	
LC TRIBAL 7-23D-56	23	050S	060W	4301351479		Indian	OW	APD	
LC TRIBAL 4-7-56	7	050S	060W	4301351482		Indian	OW	APD	
LC TRIBAL 3-2-56	2	050S	060W	4301351483		Indian	OW	APD	
LC TRIBAL 12H-23-56	23	050S	060W	4301351488		Indian	OW	APD	
CC TRIBAL 15-34D-38	2	040S	080W	4301351490		Indian	OW	APD	
CC TRIBAL 14-35D-38	2	040S	080W	4301351491		Indian	OW	APD	
CC TRIBAL 8-3D-48	2	040S	080W	4301351493		Indian	OW	APD	
LC TRIBAL 12HH-31-45	32	040S	050W	4301351499		Indian	OW	APD	
LC TRIBAL 1-10D-56	10	050S	060W	4301351510		Indian	OW	APD	
LC TRIBAL 3-10D-56	10	050S	060W	4301351511		Indian	OW	APD	
LC TRIBAL 7-10D-56	10	050S	060W	4301351512		Indian	OW	APD	
LC TRIBAL 9-29D-56	29	050S	060W	4301351513		Indian	OW	APD	
UTE TRIBAL 1-16-55	16	050S	050W	4301351519		Indian	OW	APD	
CC Tribal 3-27D-38	27	030S	080W	4301351604		Indian	OW	APD	
LC FEE 10-36D-56	36	050S	060W	4301351622		Fee	OW	APD	
Myrin Fee 3-16D-55	16	050S	050W	4301351633		Fee	OW	APD	
LC TRIBAL 12H-34-56	34	050S	060W	4301351634		Indian	OW	APD	
UTE FEE 12-16D-55	16	050S	050W	4301351635		Fee	OW	APD	
LC TRIBAL 15-27-56	27	050S	060W	4301351649		Indian	OW	APD	
LC TRIBAL 11-27D-56	27	050S	060W	4301351650		Indian	OW	APD	
LC TRIBAL 1-17-56	17	050S	060W	4301351704		Indian	OW	APD	
LC Tribal 13-11D-58	11	050S	080W	4301351708		Indian	OW	APD	
LC Tribal 15-11D-58	11	050S	080W	4301351709		Indian	OW	APD	
LC Tribal 4HW-8-56	8	050S	060W	4301351710		Indian	OW	APD	
LC FEE 1-11D-56	11	050S	060W	4301351712		Fee	OW	APD	
LC TRIBAL 3-11D-56	11	050S	060W	4301351713		Indian	OW	APD	
LC TRIBAL 7-11D-56	11	050S	060W	4301351714		Indian	OW	APD	
LC TRIBAL 9-34D-45	34	040S	050W	4301351717		Indian	OW	APD	
LC Tribal 8M-23-45	23	040S	050W	4301351722		Indian	OW	APD	
LC TRIBAL 4-34D-45	34	040S	050W	4301351723		Indian	OW	APD	
LC TRIBAL 7-34D-45	34	040S	050W	4301351724		Indian	OW	APD	
LC Tribal 3-14D-58	11	050S	080W	4301351726		Indian	OW	APD	
LC Tribal 11-11D-58	11	050S	080W	4301351729		Indian	OW	APD	
LC TRIBAL 8-31D-56	31	050S	060W	4301351746		Indian	OW	APD	
LC TRIBAL 13-34D-45	34	040S	050W	4301351747		Indian	OW	APD	
LC Fee 2-6D-57	6	050S	070W	4301351749		Fee	OW	APD	
LC Tribal 15-12D-58	12	050S	080W	4301351783		Indian	OW	APD	
LC Tribal 9-12D-58	12	050S	080W	4301351784		Indian	OW	APD	
LC Tribal 1-13D-58	12	050S	080W	4301351785		Indian	OW	APD	
LC Tribal 13-7D-57	12	050S	080W	4301351786		Indian	OW	APD	
LC Tribal 9-2D-58	2	050S	080W	4301351788		Indian	OW	APD	
LC Tribal 1-2D-58	2	050S	080W	4301351789		Indian	OW	APD	
LC Tribal 5-1D-58	2	050S	080W	4301351790		Indian	OW	APD	
LC TRIBAL 12-31D-56	31	050S	060W	4301351799		Indian	OW	APD	
LC TRIBAL 8-20D-56	20	050S	060W	4301351800		Indian	OW	APD	
LC TRIBAL 6-31D-56	31	050S	060W	4301351801		Indian	OW	APD	
LC Tribal 11-7D-57	7	050S	070W	4301351814		Indian	OW	APD	
LC Tribal 5-7D-57	7	050S	070W	4301351815		Indian	OW	APD	
LC Fee 15-6D-57	6	050S	070W	4301351816		Fee	OW	APD	
LC Tribal 11-6D-57	6	050S	070W	4301351817		Indian	OW	APD	
LC TRIBAL 9-27-56	27	050S	060W	4301351822		Indian	OW	APD	
LC TRIBAL 7-27D-56	27	050S	060W	4301351823		Indian	OW	APD	

LC Fee 7-31D-45	31	040S	050W	4301351857		Fee	OW	APD	
LC Tribal 5-31D-45	31	040S	050W	4301351858		Indian	OW	APD	
LC Tribal 8-33-45	33	040S	050W	4301351859		Indian	OW	APD	
LC Tribal 16-31-45	31	040S	050W	4301351863		Indian	OW	APD	
LC Tribal 7-23D-45	23	040S	050W	4301351865		Indian	OW	APD	
LC Tribal 1-23D-56	23	050S	060W	4301351866		Indian	OW	APD	
LC TRIBAL 1-19-56	19	050S	060W	4301351867		Indian	OW	APD	
LC TRIBAL 7-19D-56	19	050S	060W	4301351868		Indian	OW	APD	
LC TRIBAL 9-4D-56	4	050S	060W	4301351869		Indian	OW	APD	
LC Tribal 14-32D-45	32	040S	050W	4301351879		Indian	OW	APD	
LC TRIBAL 7-17D-56	17	050S	060W	4301351886		Indian	OW	APD	
LC TRIBAL 5-17D-56	17	050S	060W	4301351887		Indian	OW	APD	
LC FEE 4-32D-45	31	040S	050W	4301351892		Fee	OW	APD	
LC TRIBAL 9-2D-56	2	050S	060W	4301351893		Indian	OW	APD	
LC TRIBAL 1-2D-56	2	050S	060W	4301351894		Indian	OW	APD	
LC Tribal 15-23D-45	23	040S	050W	4301351895		Indian	OW	APD	
LC TRIBAL 11-34D-56	34	050S	060W	4301351900		Indian	OW	APD	
LC TRIBAL 9-5D-56	4	050S	060W	4301351901		Indian	OW	APD	
LC Tribal 10-28D-45	28	040S	050W	4301351903		Indian	OW	APD	
LC TRIBAL 13-20D-56	20	050S	060W	4301351904		Indian	OW	APD	
Ute Tribal 14-17-55	17	050S	050W	4301351908		Indian	OW	APD	
LC Tribal 3-27D-45	27	040S	050W	4301351911		Indian	OW	APD	
LC TRIBAL 9-34D-56	34	050S	060W	4301351914		Indian	OW	APD	
CC Fee 8R-9-37	9	030S	070W	4301351937		Fee	OW	APD	
LC Tribal 10-33D-45	33	040S	050W	4301351939		Indian	OW	APD	
LC Tribal 14-33D-45	33	040S	050W	4301351940		Indian	OW	APD	
LC Tribal 10-27D-45	27	040S	050W	4301351941		Indian	OW	APD	
LC Tribal 14-27D-45	27	040S	050W	4301351951		Indian	OW	APD	
LC Tribal 6-33D-45	33	040S	050W	4301351955		Indian	OW	APD	
LC Tribal 6-32D-45	32	040S	050W	4301351956		Indian	OW	APD	
Federal 3-11D-65	11	060S	050W	4301351982		Federal	OW	APD	
Federal 2-4-64	4	060S	040W	4301351983		Federal	OW	APD	
Federal 5-11D-65	11	060S	050W	4301351984		Federal	OW	APD	
Federal 7-4D-64	4	060S	040W	4301351985		Federal	OW	APD	
Federal 3-4D-64	4	060S	040W	4301351986		Federal	OW	APD	
Federal 8-4D-64	4	060S	040W	4301351988		Federal	OW	APD	
Federal 6-4D-64	4	060S	040W	4301351989		Federal	OW	APD	
Federal 7-9D-64	9	060S	040W	4301351990		Federal	OW	APD	
Federal 4-4D-64	4	060S	040W	4301351991		Federal	OW	APD	
Federal 9-4D-64	4	060S	040W	4301352004		Federal	OW	APD	
Federal 10-4D-64	4	060S	040W	4301352011		Federal	OW	APD	
Federal 3-9D-64	9	060S	040W	4301352015		Federal	OW	APD	
Federal 1-9D-64	9	060S	040W	4301352020		Federal	OW	APD	
Federal 6-9-64	9	060S	040W	4301352021		Federal	OW	APD	
Federal 8-9D-64	9	060S	040W	4301352023		Federal	OW	APD	
Federal 1-4D-64	4	060S	040W	4301352025		Federal	OW	APD	
Federal 16-4D-64	4	060S	040W	4301352026		Federal	OW	APD	
LC Tribal 10-23D-45	23	040S	050W	4301352029		Indian	OW	APD	
Federal 15-4D-64	4	060S	040W	4301352032		Federal	OW	APD	
Federal 5-9D-64	9	060S	040W	4301352035		Federal	OW	APD	
Federal 9-9D-64	9	060S	040W	4301352036		Federal	OW	APD	
Federal 11-9D-64	9	060S	040W	4301352037		Federal	OW	APD	
Federal 12-9D-64	9	060S	040W	4301352038		Federal	OW	APD	
Federal 13-9D-64	9	060S	040W	4301352039		Federal	OW	APD	
FEDERAL 14-9D-64	9	060S	040W	4301352040		Federal	OW	APD	
Federal 10-9D-64	9	060S	040W	4301352041		Federal	OW	APD	
Federal 2-9D-64	9	060S	040W	4301352042		Federal	OW	APD	
Federal 15-9D-64	9	060S	040W	4301352043		Federal	OW	APD	
Federal 16-9D-64	9	060S	040W	4301352044		Federal	OW	APD	
LC Tribal 10-32D-45	32	040S	050W	4301352065		Indian	OW	APD	
LC Tribal 16-28D-45	28	040S	050W	4301352073		Indian	OW	APD	
LC Tribal 15-24D-45	24	040S	050W	4301352074		Indian	OW	APD	
LC Tribal 13-17D-56	17	050S	060W	4301352076		Indian	OW	APD	
LC Tribal 15-17D-56	17	050S	060W	4301352077		Indian	OW	APD	
LC Tribal 5-26D-56	26	050S	060W	4301352097		Indian	OW	APD	
LC Tribal 11-26D-56	26	050S	060W	4301352098		Indian	OW	APD	

LC Tribal 13-26D-56	26	050S	060W	4301352099		Indian	OW	APD	
LC Tribal 2-27D-45	27	040S	050W	4301352100		Indian	OW	APD	
LC Tribal 8-27D-45	27	040S	050W	4301352101		Indian	OW	APD	
LC Tribal 4-9D-56	9	050S	060W	4301352102		Indian	OW	APD	
LC Tribal 8-32D-45	32	040S	050W	4301352135		Indian	OW	APD	
UTE Tribal 15-24D-54	24	050S	040W	4301352156		Indian	GW	APD	
UTE Tribal 9-24D-54	24	050S	040W	4301352157		Indian	GW	APD	
UTE Tribal 1-25D-54	25	050S	040W	4301352173		Indian	GW	APD	
UTE Tribal 9-25D-54	25	050S	040W	4301352177		Indian	GW	APD	
Myrin Tribal 9-10D-55	10	050S	050W	4301352189		Indian	OW	APD	
Myrin Tribal 16-10D-55	10	050S	050W	4301352190		Indian	OW	APD	
Myrin Tribal 10-10D-55	10	050S	050W	4301352191		Indian	OW	APD	
UTE Tribal 1-24D-54	24	050S	040W	4301352304		Indian	GW	APD	
UTE Tribal 7-24D-54	24	050S	040W	4301352306		Indian	GW	APD	
UTE Tribal 12-25D-54	25	050S	040W	4301352308		Indian	GW	APD	
UTE Tribal 4-13D-54	13	050S	040W	4301352321		Indian	GW	APD	
UTE Tribal 13-25D-54	25	050S	040W	4301352322		Indian	GW	APD	
Abbott Fee 1-6D-54	6	050S	040W	4301352324		Fee	OW	APD	
Abbott Fee 7-6D-54	6	050S	040W	4301352327		Fee	OW	APD	
UTE Tribal 3-24D-54	24	050S	040W	4301352347		Indian	GW	APD	
UTE Tribal 5-24D-54	24	050S	040W	4301352348		Indian	GW	APD	
State Tribal 7-12D-55	12	050S	050W	4301352369		Indian	OW	APD	
State Tribal 14-1D-55	1	050S	050W	4301352372		Indian	OW	APD	
State Tribal 11-1D-55	1	050S	050W	4301352373		Indian	OW	APD	
State Tribal 13-1D-55	1	050S	050W	4301352374		Indian	OW	APD	
State Tribal 12-2D-55	2	050S	050W	4301352391		Indian	OW	APD	
State Tribal 14-2D-55	2	050S	050W	4301352392		Indian	OW	APD	
State Tribal 13-2D-55	2	050S	050W	4301352393		Indian	OW	APD	
State Tribal 14-3D-55	3	050S	050W	4301352430		Indian	OW	APD	
State Tribal 11-3D-55	3	050S	050W	4301352434		Indian	OW	APD	
State Tribal 13-3D-55	3	050S	050W	4301352435		Indian	OW	APD	
UTE TRIBAL 2-5D-55	5	050S	050W	4301352450		Indian	OW	APD	
Ute Tribal 1-5D-55	5	050S	050W	4301352456		Indian	OW	APD	BRUNDAGE CANYON
Ute Tribal 7-5-55	5	050S	050W	4301352459		Indian	OW	APD	
Ute Tribal 3-16D-54	9	050S	040W	4301352467		Indian	OW	APD	
State Tribal 1-3D-55	3	050S	050W	4301352471		Indian	OW	APD	
State Tribal 2-3D-55	3	050S	050W	4301352472		Indian	OW	APD	
State Tribal 7-3D-55	3	050S	050W	4301352473		Indian	OW	APD	
State Tribal 8-3D-55	3	050S	050W	4301352474		Indian	OW	APD	
UTE FEE 10-9D-54	9	050S	040W	4301352475		Fee	OW	APD	
UTE FEE 12-9D-54	9	050S	040W	4301352476		Fee	OW	APD	
UTE FEE 16-9D-54	9	050S	040W	4301352478		Fee	OW	APD	
Ute Tribal 2-16D-54	9	050S	040W	4301352481		Indian	OW	APD	
Federal 14-6D-65	6	060S	050W	4301352495		Federal	OW	APD	
Federal 13-6D-65	6	060S	050W	4301352496		Federal	OW	APD	
Federal 11-6D-65	6	060S	050W	4301352497		Federal	OW	APD	
Federal 10-6D-65	6	060S	050W	4301352498		Federal	OW	APD	
State Tribal 3-3D-55	3	050S	050W	4301352532		Indian	OW	APD	
State Tribal 4-3D-55	3	050S	050W	4301352533		Indian	OW	APD	
State Tribal 5-3D-55	3	050S	050W	4301352535		Indian	OW	APD	
State Tribal 6-3D-55	3	050S	050W	4301352536		Indian	OW	APD	
Federal 2-7D-65	7	060S	050W	4301352537		Federal	OW	APD	
Federal 5-7D-65	7	060S	050W	4301352538		Federal	OW	APD	
Federal 4-7D-65	7	060S	050W	4301352541		Federal	OW	APD	
UTE FEE 11-9D-54	9	050S	040W	4301352544		Fee	OW	APD	
UTE TRIBAL 15-12D-55	12	050S	050W	4301352549		Indian	OW	APD	
UTE TRIBAL 6-5D-55	5	050S	050W	4301352556		Indian	OW	APD	
UTE TRIBAL 5-5D-55	5	050S	050W	4301352557		Indian	OW	APD	
UTE TRIBAL 4-5D-55	5	050S	050W	4301352558		Indian	OW	APD	
UTE TRIBAL 3-5D-55	5	050S	050W	4301352559		Indian	OW	APD	
Federal 3-7-65	7	060S	050W	4301352560		Federal	OW	APD	
Ute Tribal 9-11D-55	11	050S	050W	4301352564		Indian	OW	APD	
UTE TRIBAL 10-11D-55	11	050S	050W	4301352566		Indian	OW	APD	
UTE TRIBAL 15-11D-55	11	050S	050W	4301352567		Indian	OW	APD	
Federal 1-7D-65	6	060S	050W	4301352589		Federal	OW	APD	
Federal 16-6D-65	6	060S	050W	4301352590		Federal	OW	APD	

Federal 15-6D-65	6	060S	050W	4301352591		Federal	OW	APD	
UTE TRIBAL 14-12D-55	12	050S	050W	4301352592		Indian	OW	APD	
UTE TRIBAL 13-12D-55	12	050S	050W	4301352593		Indian	OW	APD	
UTE TRIBAL 10-11D-54	11	050S	040W	4301352603		Indian	OW	APD	
UTE TRIBAL 9-11D-54	11	050S	040W	4301352604		Indian	OW	APD	
UTE TRIBAL 15-11-54	11	050S	040W	4301352605		Indian	OW	APD	
UTE TRIBAL 16-11D-54	11	050S	040W	4301352606		Indian	OW	APD	
UTE TRIBAL 14-11D-55	11	050S	050W	4301352610		Indian	OW	APD	
UTE TRIBAL 13-11D-55	11	050S	050W	4301352611		Indian	OW	APD	
UTE TRIBAL 12-11D-55	11	050S	050W	4301352612		Indian	OW	APD	
UTE TRIBAL 11-11D-55	11	050S	050W	4301352613		Indian	OW	APD	
Federal 6-7D-65	7	060S	050W	4301352682		Federal	OW	APD	
Federal 11-7D-65	7	060S	050W	4301352683		Federal	OW	APD	
Federal 10-7D-65	7	060S	050W	4301352684		Federal	OW	APD	
Federal 7-7D-65	7	060S	050W	4301352685		Federal	OW	APD	
UTE TRIBAL 14-30D-55	30	050S	050W	4301352687		Indian	OW	APD	
UTE TRIBAL 13-30D-55	30	050S	050W	4301352688		Indian	OW	APD	
UTE TRIBAL 12-30D-55	30	050S	050W	4301352689		Indian	OW	APD	
UTE TRIBAL 11-30D-55	30	050S	050W	4301352690		Indian	OW	APD	
UTE TRIBAL 7-17D-55	17	050S	050W	4301352691		Indian	OW	APD	
UTE TRIBAL 6-17D-55	17	050S	050W	4301352692		Indian	OW	APD	
UTE TRIBAL 3-17D-55	17	050S	050W	4301352693		Indian	OW	APD	
UTE TRIBAL 2-17D-55	17	050S	050W	4301352694		Indian	OW	APD	
UTE TRIBAL 4-17D-55	17	050S	050W	4301352695		Indian	OW	APD	
State Tribal 3-12D-55	12	050S	050W	4301352697		Indian	OW	APD	
State Tribal 4-12D-55	12	050S	050W	4301352698		Indian	OW	APD	
UTE TRIBAL 12-31D-55	31	050S	050W	4301352699		Indian	OW	APD	
UTE TRIBAL 13-31D-55	31	050S	050W	4301352700		Indian	OW	APD	
UTE TRIBAL 14-31D-55	31	050S	050W	4301352701		Indian	OW	APD	
UTE TRIBAL 14-13D-54	13	050S	040W	4301352702		Indian	OW	APD	
UTE TRIBAL 11-31-55	31	050S	050W	4301352703		Indian	OW	APD	
State Tribal 3-11D-55	11	050S	050W	4301352704		Indian	OW	APD	
State Tribal 4-11D-55	11	050S	050W	4301352705		Indian	OW	APD	
State Tribal 5-11D-55	11	050S	050W	4301352706		Indian	OW	APD	
State Tribal 6-11D-55	11	050S	050W	4301352707		Indian	OW	APD	
State Tribal 8-11D-55	11	050S	050W	4301352708		Indian	OW	APD	
State Tribal 7-11D-55	11	050S	050W	4301352709		Indian	OW	APD	
State Tribal 2-11D-55	11	050S	050W	4301352710		Indian	OW	APD	
State Tribal 1-11D-55	11	050S	050W	4301352711		Indian	OW	APD	
UTE TRIBAL 9-4D-55	4	050S	050W	4301352713		Indian	OW	APD	
State Tribal 2-10D-55	10	050S	050W	4301352714		Indian	OW	APD	
State Tribal 7-10D-55	10	050S	050W	4301352715		Indian	OW	APD	
State Tribal 8-10D-55	10	050S	050W	4301352716		Indian	OW	APD	
UTE TRIBAL 10-4D-55	4	050S	050W	4301352717		Indian	OW	APD	
UTE TRIBAL 15-4D-55	4	050S	050W	4301352718		Indian	OW	APD	
State Tribal 1-10D-55	10	050S	050W	4301352720		Indian	OW	APD	
UTE TRIBAL 16-4D-55	4	050S	050W	4301352721		Indian	OW	APD	
State Tribal 3-10D-55	10	050S	050W	4301352723		Indian	OW	APD	
State Tribal 4-10D-55	10	050S	050W	4301352724		Indian	OW	APD	
State Tribal 5-10D-55	10	050S	050W	4301352725		Indian	OW	APD	
State Tribal 6-10D-55	10	050S	050W	4301352726		Indian	OW	APD	
UTE TRIBAL 11-5D-55	5	050S	050W	4301352727		Indian	OW	APD	
UTE TRIBAL 12-5D-55	5	050S	050W	4301352728		Indian	OW	APD	
UTE TRIBAL 13-5D-55	5	050S	050W	4301352729		Indian	OW	APD	
UTE TRIBAL 14-5D-55	5	050S	050W	4301352730		Indian	OW	APD	
UTE TRIBAL 9-30D-55	30	050S	050W	4301352731		Indian	OW	APD	
State Tribal 15-2D-55	2	050S	050W	4301352732		Indian	OW	APD	
State Tribal 16-2D-55	2	050S	050W	4301352733		Indian	OW	APD	
State Tribal 10-2D-55	2	050S	050W	4301352734		Indian	OW	APD	
State Tribal 9-2D-55	2	050S	050W	4301352735		Indian	OW	APD	
UTE TRIBAL 10-30D-55	30	050S	050W	4301352736		Indian	OW	APD	
UTE TRIBAL 15-30D-55	30	050S	050W	4301352737		Indian	OW	APD	
UTE TRIBAL 16-30D-55	30	050S	050W	4301352738		Indian	OW	APD	
Myrin Tribal 9-19D-55	19	050S	050W	4301352739		Indian	OW	APD	
State Tribal 16-3D-55	3	050S	050W	4301352740		Indian	OW	APD	
State Tribal 15-3D-55	3	050S	050W	4301352741		Indian	OW	APD	

State Tribal 10-3D-55	3	050S	050W	4301352742		Indian	OW	APD	
State Tribal 9-3D-55	3	050S	050W	4301352743		Indian	OW	APD	
Myrin Tribal 15-19D-55	19	050S	050W	4301352744		Indian	OW	APD	
Myrin Tribal 13-19D-55	19	050S	050W	4301352745		Indian	OW	APD	
Myrin Tribal 12-19D-55	19	050S	050W	4301352746		Indian	OW	APD	
UTE TRIBAL 5-4D-55	4	050S	050W	4301352747		Indian	OW	APD	
UTE TRIBAL 4-4D-55	4	050S	050W	4301352748		Indian	OW	APD	
UTE TRIBAL 3-4D-55	4	050S	050W	4301352749		Indian	OW	APD	
UTE TRIBAL 6-4D-55	4	050S	050W	4301352754		Indian	OW	APD	
UTE TRIBAL 3-31D-55	31	050S	050W	4301352757		Indian	OW	APD	
UTE TRIBAL 5-31D-55	31	050S	050W	4301352758		Indian	OW	APD	
UTE TRIBAL 6-31D-55	31	050S	050W	4301352759		Indian	OW	APD	
UTE TRIBAL 7-31D-55	31	050S	050W	4301352764		Indian	OW	APD	
Myrin Tribal 11-19D-55	19	050S	050W	4301352765		Indian	OW	APD	
Federal 8-14D-65	14	060S	050W	4301352767		Federal	OW	APD	
Federal 7-14D-65	14	060S	050W	4301352768		Federal	OW	APD	
Federal 2-14D-65	14	060S	050W	4301352769		Federal	OW	APD	
Federal 1-14D-65	14	060S	050W	4301352770		Federal	OW	APD	
UTE TRIBAL 8-5D-55	5	050S	050W	4301352773		Indian	OW	APD	
UTE TRIBAL 4-31D-55	31	050S	050W	4301352795		Indian	OW	APD	
UTE TRIBAL 4-30D-55	30	050S	050W	4301352796		Indian	OW	APD	
UTE TRIBAL 5-30D-55	30	050S	050W	4301352797		Indian	OW	APD	
UTE TRIBAL 7-30D-55	30	050S	050W	4301352799		Indian	OW	APD	
Federal 1-13D-65	13	060S	050W	4301352800		Federal	OW	APD	
Federal 7-13D-65	13	060S	050W	4301352802		Federal	OW	APD	
UTE TRIBAL 1-30D-55	30	050S	050W	4301352809		Indian	OW	APD	
LC TRIBAL 6-25D-56	25	050S	060W	4301352810		Indian	OW	APD	
LC TRIBAL 4-25D-56	25	050S	060W	4301352812		Indian	OW	APD	
Federal 6-13D-65	13	060S	050W	4301352813		Federal	OW	APD	
Federal 4-13D-65	13	060S	050W	4301352814		Federal	OW	APD	
Federal 3-13D-65	13	060S	050W	4301352815		Federal	OW	APD	
Federal 3-16D-64	16	060S	040W	4301352823		Federal	OW	APD	
Federal 4-16D-64	16	060S	040W	4301352824		Federal	OW	APD	
Federal 5-16D-64	16	060S	040W	4301352825		Federal	OW	APD	
Federal 6-16D-64	16	060S	040W	4301352826		Federal	OW	APD	
Federal 5-13D-65	13	060S	050W	4301352827		Federal	OW	APD	
LC TRIBAL 1-25D-56	25	050S	060W	4301352835		Indian	OW	APD	
LC TRIBAL 2-25D-56	25	050S	060W	4301352836		Indian	OW	APD	
LC TRIBAL 8-25D-56	25	050S	060W	4301352837		Indian	OW	APD	
UTE FEE 1-13D-55	13	050S	050W	4301352838		Fee	OW	APD	
LC TRIBAL 9-25D-56	25	050S	060W	4301352840		Indian	OW	APD	
LC TRIBAL 15-25-56	25	050S	060W	4301352844		Indian	OW	APD	
Federal 9-5D-65	5	060S	050W	4301352846		Federal	OW	APD	
Federal 10-5D-65	5	060S	050W	4301352847		Federal	OW	APD	
LC TRIBAL 16-25D-56	25	050S	060W	4301352848		Indian	OW	APD	
LC TRIBAL 10-25D-56	25	050S	060W	4301352849		Indian	OW	APD	
UTE TRIBAL 8-30D-55	29	050S	050W	4301352855		Indian	OW	APD	
UTE TRIBAL 9-29D-55	29	050S	050W	4301352870		Indian	OW	APD	
UTE TRIBAL 6-24D-55	24	050S	050W	4301352871		Indian	OW	APD	
UTE TRIBAL 16-17D-55	17	050S	050W	4301352872		Indian	OW	APD	
UTE TRIBAL 13-27D-55	27	050S	050W	4301352882		Indian	OW	APD	
UTE TRIBAL 4-29D-55	29	050S	050W	4301352883		Indian	OW	APD	
UTE TRIBAL 1-29D-55	29	050S	050W	4301352884		Indian	OW	APD	
Federal 4-2D-65	2	060S	050W	4301352885		Federal	OW	APD	
Federal 5-2D-65	2	060S	050W	4301352886		Federal	OW	APD	
Federal 12-2D-65	2	060S	050W	4301352887		Federal	OW	APD	
LC TRIBAL 12-25D-56	25	050S	060W	4301352888		Indian	OW	APD	
LC TRIBAL 13-25D-56	25	050S	060W	4301352890		Indian	OW	APD	
LC TRIBAL 14-25D-56	25	050S	060W	4301352891		Indian	OW	APD	
Federal 15-3D-65	3	060S	050W	4301352892		Federal	OW	APD	
Federal 9-3D-65	3	060S	050W	4301352893		Federal	OW	APD	
Federal 8-3D-65	3	060S	050W	4301352894		Federal	OW	APD	
Federal 6-3D-65	3	060S	050W	4301352895		Federal	OW	APD	
UTE TRIBAL 6-28D-55	28	050S	050W	4301334056	18593	Indian	OW	DRL	
MOON TRIBAL 9-27D-54	27	050S	040W	4301334108	19095	Indian	OW	DRL	
LC TRIBAL 9-16D-56	16	050S	060W	4301350600	99999	Indian	OW	DRL	

FEDERAL 15-6D-64	6	060S	040W	4301351219	18793	Federal	OW	DRL	
UTE TRIBAL 9-21D-55	21	050S	050W	4301351258	19401	Indian	OW	DRL	
STATE TRIBAL 2-12D-55	12	050S	050W	4301351310	19444	Indian	OW	DRL	
UTE TRIBAL 7-10D-54	10	050S	040W	4301351365	19391	Indian	OW	DRL	
LC TRIBAL 9-26D-56	26	050S	060W	4301351381	19433	Indian	OW	DRL	
UTE TRIBAL 8-17D-55	17	050S	050W	4301351413	19388	Indian	OW	DRL	
LC TRIBAL 9-24D-45	24	040S	050W	4301351431	18861	Indian	OW	DRL	
LC TRIBAL 2-29D-45	29	040S	050W	4301351705	99999	Indian	OW	DRL	
LC TAYLOR FEE 14-22D-56	22	050S	060W	4301351744	19508	Fee	OW	DRL	
LC FEE 14-6D-56	6	050S	060W	4301351787	18910	Fee	OW	DRL	
LC FEE 15-6-56	6	050S	060W	4301351792	19334	Fee	OW	DRL	
LC Fee 14-36D-56	36	050S	060W	4301351878	19376	Fee	OW	DRL	
LC Fee 12-36-56	36	050S	060W	4301351883	19377	Fee	OW	DRL	
LC Tribal 6-29D-45	29	040S	050W	4301351902	19402	Indian	OW	DRL	
Federal 4-6D-65	6	060S	050W	4301352005	19173	Federal	OW	DRL	
Federal 12-6D-65	6	060S	050W	4301352006	19174	Federal	OW	DRL	
UTE Tribal 14-18D-54	18	050S	040W	4301352213	19509	Indian	GW	DRL	
UTE Tribal 15-31D-55	31	050S	050W	4301352309	19472	Indian	GW	DRL	
UTE Tribal 16-31D-55	31	050S	050W	4301352318	19473	Indian	GW	DRL	
State Tribal 1-12D-55	12	050S	050W	4301352390	19445	Indian	OW	DRL	
State Tribal 16-6D-54	6	050S	040W	4301352394	19424	Indian	OW	DRL	
State Tribal 10-6D-54	6	050S	040W	4301352395	19425	Indian	OW	DRL	
State Tribal 9-6D-54	6	050S	040W	4301352396	19426	Indian	OW	DRL	
State Tribal 7-7D-54	7	050S	040W	4301352426	19496	Indian	OW	DRL	
State Tribal 1-7D-54	7	050S	040W	4301352427	19497	Indian	OW	DRL	
State Tribal 2-7D-54	7	050S	040W	4301352428	19498	Indian	OW	DRL	
State Tribal 3-7D-54	7	050S	040W	4301352429	19517	Indian	OW	DRL	
State Tribal 4-7D-54	7	050S	040W	4301352431	99999	Indian	OW	DRL	
State Tribal 5-7D-54	7	050S	040W	4301352432	99999	Indian	OW	DRL	
State Tribal 6-7D-54	7	050S	040W	4301352433	19518	Indian	OW	DRL	
State Tribal 11-6D-54	6	050S	040W	4301352452	19474	Indian	OW	DRL	
State Tribal 12-6D-54	6	050S	040W	4301352453	19475	Indian	OW	DRL	
State Tribal 13-6D-54	6	050S	040W	4301352454	19476	Indian	OW	DRL	
State Tribal 14-6D-54	6	050S	040W	4301352455	19477	Indian	OW	DRL	
Ute Tribal 1-9D-54	9	050S	040W	4301352465	19356	Indian	OW	DRL	
Ute Tribal 7-9D-54	9	050S	040W	4301352466	19357	Indian	OW	DRL	
UTE TRIBAL 12-5D-54	5	050S	040W	4301352480	19499	Indian	OW	DRL	
UTE TRIBAL 13-5D-54	5	050S	040W	4301352484	19500	Indian	OW	DRL	
UTE TRIBAL 14-5D-54	5	050S	040W	4301352493	19510	Indian	OW	DRL	
State Tribal 13-11D-54	10	050S	040W	4301352561	19519	Indian	OW	DRL	
State Tribal 1-18D-54	18	050S	040W	4301352568	19434	Indian	OW	DRL	
State Tribal 2-18D-54	18	050S	040W	4301352576	19427	Indian	OW	DRL	
State Tribal 8-18D-54	18	050S	040W	4301352577	19428	Indian	OW	DRL	
State Tribal 4-18D-54	18	050S	040W	4301352607	19435	Indian	OW	DRL	
State Tribal 3-18D-54	18	050S	040W	4301352608	19436	Indian	OW	DRL	
State Tribal 6-18D-54	18	050S	040W	4301352609	19437	Indian	OW	DRL	
State Tribal 5-12-55	12	050S	050W	4301352643	19446	Indian	OW	DRL	
State Tribal 12-12D-55	12	050S	050W	4301352644	19447	Indian	OW	DRL	
State Tribal 6-12D-55	12	050S	050W	4301352645	19438	Indian	OW	DRL	
State Tribal 16-1D-55	1	050S	050W	4301352646	19483	Indian	OW	DRL	
State Tribal 15-1D-55	1	050S	050W	4301352647	19484	Indian	OW	DRL	
State Tribal 10-1D-55	1	050S	050W	4301352648	19485	Indian	OW	DRL	
State Tribal 9-1D-55	1	050S	050W	4301352649	19486	Indian	OW	DRL	
LC FEE 16-15D-56	14	050S	060W	4301352655	19520	Fee	OW	DRL	
LC Tribal 2-22D-56	22	050S	060W	4301352663	99999	Indian	OW	DRL	
LC Tribal 3-22D-56	22	050S	060W	4301352664	99999	Indian	OW	DRL	
Federal 2-13-65	13	060S	050W	4301352801	19501	Federal	OW	DRL	
Federal 8-13D-65	13	060S	050W	4301352803	19502	Federal	OW	DRL	
Federal 12-8D-64	7	060S	040W	4301352832	99999	Federal	OW	DRL	
Federal 5-8D-64	7	060S	040W	4301352833	99999	Federal	OW	DRL	
Federal 4-8D-64	7	060S	040W	4301352834	99999	Federal	OW	DRL	
Federal 3-8D-64	5	060S	040W	4301352845	19503	Federal	OW	DRL	
LC TRIBAL 4H-31-56	31	050S	060W	4301351738		Indian	OW	NEW	
Federal 14-7D-65	31	050S	060W	4301351910		Indian	OW	NEW	
LC Fee 11-22-57	22	050S	070W	4301352127		Fee	OW	NEW	
LC Fee 13-22D-57	22	050S	070W	4301352131		Fee	OW	NEW	

LC Tribal 5-22D-57	22	050S	070W	4301352133		Indian	OW	NEW	
LC Tribal 15-22D-57	22	050S	070W	4301352134		Indian	OW	NEW	
LC Tribal 11-18D-56	18	050S	060W	4301352140		Indian	OW	NEW	
LC Tribal 13-18D-56	18	050S	060W	4301352141		Indian	OW	NEW	
LC Tribal 15-18D-56	18	050S	060W	4301352142		Indian	OW	NEW	
LC Tribal 7-18D-56	18	050S	060W	4301352153		Indian	OW	NEW	
LC Tribal 5-18D-56	18	050S	060W	4301352154		Indian	OW	NEW	
LC Tribal 3-18-56	18	050S	060W	4301352155		Indian	OW	NEW	
LC Tribal 6-19D-56	19	050S	060W	4301352247		Indian	OW	NEW	
LC Tribal 4-19D-56	19	050S	060W	4301352248		Indian	OW	NEW	
Abbott Fee 3-6D-54	6	050S	040W	4301352325		Fee	OW	NEW	
LC Fee 9-11D-56	11	050S	060W	4301352479		Fee	OW	NEW	
Williams Tribal 8-4D-54	4	050S	040W	4301352650		Indian	OW	NEW	
Williams Tribal 7-4D-54	4	050S	040W	4301352651		Indian	OW	NEW	
Williams Tribal 2-4D-54	4	050S	040W	4301352652		Indian	OW	NEW	
Williams Tribal 1-4D-54	4	050S	040W	4301352653		Indian	OW	NEW	
Federal 9-8D-64	9	060S	040W	4301352880		Federal	OW	NEW	
Federal 16-8D-64	9	060S	040W	4301352881		Federal	OW	NEW	
LC Nielsen Tribal 6-33D-56	33	050S	060W	4301352896		Indian	OW	NEW	
LC Nielsen Tribal 2-33D-56	33	050S	060W	4301352897		Indian	OW	NEW	
LC Nielsen Tribal 4-33D-56	33	050S	060W	4301352898		Indian	OW	NEW	
LC Nielsen Tribal 5-33D-56	33	050S	060W	4301352899		Indian	OW	NEW	
UTE FEE 13-9D-54	9	050S	040W	4301352906		Fee	OW	NEW	
UTE FEE 2-34D-55	27	050S	050W	4301352971		Fee	OW	NEW	
Federal 13-7D-65	7	060S	050W	4301352974		Federal	OW	NEW	
Federal 14-7D-65	7	060S	050W	4301352975		Federal	OW	NEW	
UTE TRIBAL 6-27D-55	27	050S	050W	4301352976		Indian	OW	NEW	
LC Nielsen Tribal 12-27D-56	27	050S	060W	4301352977		Indian	OW	NEW	
LC Nielsen Tribal 13-27D-56	27	050S	060W	4301352978		Indian	OW	NEW	
LC Nielsen Tribal 16-28D-56	27	050S	060W	4301352979		Indian	OW	NEW	
LC Nielsen Fee 9-28D-56	27	050S	060W	4301352980		Fee	OW	NEW	
LC FEE 9-36D-56	36	050S	060W	4301352982		Fee	OW	NEW	
LC FEE 15-36D-56	36	050S	060W	4301352983		Fee	OW	NEW	
LC TRIBAL 6-36D-56	36	050S	060W	4301352984		Indian	OW	NEW	
LC TRIBAL 5-36D-56	36	050S	060W	4301352985		Indian	OW	NEW	
LC TRIBAL 4-36D-56	36	050S	060W	4301352986		Indian	OW	NEW	
LC TRIBAL 3-36D-56	36	050S	060W	4301352987		Indian	OW	NEW	
LC TRIBAL 2-35D-56	35	050S	060W	4301352988		Indian	OW	NEW	
LC TRIBAL 1-35D-56	35	050S	060W	4301352989		Indian	OW	NEW	
UTE TRIBAL 13-3R-54	3	050S	040W	4301330924	9488	Indian	OW	OPS	
UTE TRIBAL 3-20D-55	20	050S	050W	4301333280	18424	Indian	OW	OPS	
LC TRIBAL 4H-17-56	17	050S	060W	4301333540	18067	Indian	OW	OPS	
LC TRIBAL 16-21-46	21	040S	060W	4301333575	16156	Indian	OW	OPS	
UTE TRIBAL 8-20D-55	20	050S	050W	4301333676	17308	Indian	OW	OPS	
UTE TRIBAL 14-14D-55	14	050S	050W	4301333699	18409	Indian	OW	OPS	
UTE TRIBAL 5-29D-55	29	050S	050W	4301333740	17306	Indian	OW	OPS	
UTE TRIBAL 7-32D-55	32	050S	050W	4301333794	18359	Indian	OW	OPS	
UTE TRIBAL 12-27D-55	27	050S	050W	4301333798	18360	Indian	OW	OPS	
FOY 9-33D-55	33	050S	050W	4301333802	17125	Fee	OW	OPS	
BERRY TRIBAL 2-23D-54	23	050S	040W	4301333805	18546	Indian	OW	OPS	
UTE TRIBAL 13-29D-55	29	050S	050W	4301333807	18378	Indian	OW	OPS	
UTE TRIBAL 16-28D-55	28	050S	050W	4301333887	18594	Indian	OW	OPS	
LC FEE 8-15D-56	15	050S	060W	4301350597	19347	Fee	OW	OPS	
SFW FEE 13-10D-54	10	050S	040W	4301350892	19186	Fee	OW	OPS	
SFW TRIBAL 11-10D-54	10	050S	040W	4301350893	19215	Indian	OW	OPS	
LC TRIBAL 5HH-5-56	4	050S	060W	4301350927	18463	Indian	OW	OPS	
LC TRIBAL 16-34D-45	34	040S	050W	4301350977	18658	Indian	OW	OPS	
LC TRIBAL 3-4D-56	4	050S	060W	4301351000	18852	Indian	OW	OPS	
FEDERAL 7-12D-65	12	060S	050W	4301351058	18717	Federal	OW	OPS	
LC TRIBAL 2-33D-45	33	040S	050W	4301351402	18854	Indian	OW	OPS	
LC TRIBAL 9-3D-56	3	050S	060W	4301351514	18948	Indian	OW	OPS	
LC Tribal 3-34D-56	34	050S	060W	4301352087	19234	Indian	OW	OPS	
LC Tribal 7-34D-56	34	050S	060W	4301352088	19235	Indian	OW	OPS	
Ute Tribal 5-9D-54	9	050S	040W	4301352463	19354	Indian	OW	OPS	
Ute Tribal 3-9D-54	9	050S	040W	4301352464	19355	Indian	OW	OPS	
BC UTE TRIBAL 4-22	22	050S	040W	4301330755	2620	Indian	OW	P	

B C UTE TRIBAL 16-16	16	050S	040W	4301330841	9489	Indian	OW	P	
B C UTE TRIBAL 14-15	15	050S	040W	4301330842	9440	Indian	OW	P	
UTE TRIBAL 1-32R	32	050S	040W	4301330872	13020	Indian	OW	P	
UTE TRIBAL 23-3R	23	050S	040W	4301330886	13034	Indian	OW	P	
S COTTONWOOD RIDGE UTE TRIBAL 1-19	19	050S	040W	4301330933	9845	Indian	OW	P	BRUNDAGE CANYON
TABBY CYN UTE TRIBAL 1-25	25	050S	050W	4301330945	9722	Indian	OW	P	
S BRUNDAGE UTE TRIBAL 1-30	30	050S	040W	4301330948	9850	Indian	OW	P	
SOWERS CYN UTE TRIBAL 3-26	26	050S	050W	4301330955	10423	Indian	OW	P	
UTE TRIBAL 3-24R-55 (REENTRY)	24	050S	050W	4301330960	15173	Indian	OW	P	
UTE TRIBAL 1-20	20	050S	040W	4301330966	9925	Indian	OW	P	
T C UTE TRIBAL 9-23X	23	050S	050W	4301330999	9720	Indian	OW	P	
UTE TRIBAL 15-24R	24	050S	050W	4301331129	11985	Indian	OW	P	
S BRUNDAGE CYN UTE TRIBAL 4-27	27	050S	040W	4301331131	9851	Indian	OW	P	
UTE TRIBAL 5-13	13	050S	050W	4301331152	10421	Indian	OW	P	
UTE TRIBAL 7-20R-54	20	050S	040W	4301331281	14088	Indian	OW	P	
Z and T UTE TRIBAL 7-19	19	050S	040W	4301331282	11131	Indian	OW	P	BRUNDAGE CANYON
UTE TRIBAL 13-19	19	050S	040W	4301331284	11134	Indian	OW	P	
Z and T UTE TRIBAL 7-25	25	050S	050W	4301331310	11416	Indian	OW	P	
UTE TRIBAL 13-17	17	050S	040W	4301331546	11921	Indian	OW	P	BRUNDAGE CANYON
UTE TRIBAL 11-19	19	050S	040W	4301331547	11920	Indian	OW	P	
UTE TRIBAL 13-22	22	050S	040W	4301331548	11926	Indian	OW	P	
UTE TRIBAL 1-28	28	050S	040W	4301331549	11925	Indian	OW	P	
UTE TRIBAL 4-30	30	050S	040W	4301331550	11914	Indian	OW	P	
UTE TRIBAL 15-16	16	050S	040W	4301331648	11951	Indian	OW	P	
UTE TRIBAL 16-18	18	050S	040W	4301331650	11946	Indian	OW	P	BRUNDAGE CANYON
UTE TRIBAL 5-20	20	050S	040W	4301331651	11957	Indian	OW	P	
UTE TRIBAL 15-23	23	050S	050W	4301331671	11989	Indian	OW	P	
TABBY CANYON 1-21	21	050S	050W	4301331699	12225	Indian	OW	P	
TABBY CANYON 8-22	22	050S	050W	4301331700	12008	Indian	OW	P	
SOWERS CANYON 9-27	27	050S	050W	4301331701	11997	Indian	OW	P	
UTE TRIBAL 3-19	19	050S	040W	4301331830	12197	Indian	OW	P	
UTE TRIBAL 9-19	19	050S	040W	4301331831	12175	Indian	OW	P	
UTE TRIBAL 15-19	19	050S	040W	4301331832	12180	Indian	OW	P	
UTE TRIBAL 2-25	25	050S	050W	4301331833	12153	Indian	OW	P	
UTE TRIBAL 3-25	25	050S	050W	4301331834	12152	Indian	OW	P	
UTE TRIBAL 11-24	24	050S	050W	4301331909	12190	Indian	OW	P	
UTE TRIBAL 13-24	24	050S	050W	4301331910	12217	Indian	OW	P	
UTE TRIBAL 11-25	25	050S	050W	4301331911	12182	Indian	OW	P	
UTE TRIBAL 1-26	26	050S	050W	4301331912	12235	Indian	OW	P	
UTE TRIBAL 2-19	19	050S	040W	4301332140	12795	Indian	OW	P	BRUNDAGE CANYON
UTE TRIBAL 6-25H	25	050S	050W	4301332143	12750	Indian	OW	P	
UTE TRIBAL 9-18	18	050S	040W	4301332144	12746	Indian	OW	P	BRUNDAGE CANYON
UTE TRIBAL 11-17	17	050S	040W	4301332145	12747	Indian	OW	P	BRUNDAGE CANYON
UTE TRIBAL 12-17	17	050S	040W	4301332146	12745	Indian	OW	P	BRUNDAGE CANYON
UTE TRIBAL 14-17	17	050S	040W	4301332147	12755	Indian	OW	P	BRUNDAGE CANYON
UTE TRIBAL 15-18	18	050S	040W	4301332148	12794	Indian	OW	P	BRUNDAGE CANYON
UTE TRIBAL 6-22	22	050S	040W	4301332163	12974	Indian	OW	P	
UTE TRIBAL 6-21	21	050S	040W	4301332164	12994	Indian	OW	P	
UTE TRIBAL 7-28	28	050S	040W	4301332166	12995	Indian	OW	P	
UTE TRIBAL 11-20	20	050S	040W	4301332168	12946	Indian	OW	P	
UTE TRIBAL 13-25	25	050S	050W	4301332169	12857	Indian	OW	P	
UTE TRIBAL 2-27	27	050S	040W	4301332179	12975	Indian	OW	P	
UTE TRIBAL 1-33	33	050S	040W	4301332185	13024	Indian	OW	P	
UTE TRIBAL 1-34	34	050S	040W	4301332186	13121	Indian	OW	P	
UTE TRIBAL 2-35	35	050S	050W	4301332187	13021	Indian	OW	P	
UTE TRIBAL 4-36	36	050S	050W	4301332188	13063	Indian	OW	P	
UTE TRIBAL 5-28	28	050S	040W	4301332189	13026	Indian	OW	P	
UTE TRIBAL 5-31	31	050S	040W	4301332190	13080	Indian	OW	P	
UTE TRIBAL 9-26	26	050S	040W	4301332191	13101	Indian	OW	P	
UTE TRIBAL 11-28	28	050S	040W	4301332192	13022	Indian	OW	P	
UTE TRIBAL 3-29	29	050S	040W	4301332193	13042	Indian	OW	P	
UTE TRIBAL 5-19	19	050S	040W	4301332204	13090	Indian	OW	P	
UTE TRIBAL 12-15	15	050S	040W	4301332205	13100	Indian	OW	P	
UTE TRIBAL 13-20	20	050S	040W	4301332206	13048	Indian	OW	P	
UTE TRIBAL 1-24-55	24	050S	050W	4301332259	13618	Indian	OW	P	
UTE TRIBAL 3-28-54	28	050S	040W	4301332261	13644	Indian	OW	P	

UTE TRIBAL 5-24-55	24	050S	050W	4301332263	13621	Indian	OW	P	
UTE TRIBAL 5-26-55	26	050S	050W	4301332264	13642	Indian	OW	P	
UTE TRIBAL 6-36-55	36	050S	050W	4301332265	13600	Indian	OW	P	
UTE TRIBAL 9-24-55	24	050S	050W	4301332268	13620	Indian	OW	P	
UTE TRIBAL 11-23-55	23	050S	050W	4301332269	13572	Indian	OW	P	
UTE TRIBAL 15-25-55	25	050S	050W	4301332271	13566	Indian	OW	P	
UTE TRIBAL 16-14-55	14	050S	050W	4301332272	13567	Indian	OW	P	
UTE TRIBAL 15-27-55	27	050S	050W	4301332339	14020	Indian	OW	P	
UTE TRIBAL 5-15-55	15	050S	050W	4301332344	13606	Indian	OW	P	
UTE TRIBAL 7-20-55	20	050S	050W	4301332346	13607	Indian	OW	P	
MOON TRIBAL 12-23-54	23	050S	040W	4301332347	14008	Indian	OW	P	
UTE TRIBAL 14-28-55	28	050S	050W	4301332348	13580	Indian	OW	P	
UTE TRIBAL 16-29-55	29	050S	050W	4301332349	13581	Indian	OW	P	
UTE TRIBAL 2-32-55	32	050S	050W	4301332350	13695	Indian	OW	P	
UTE TRIBAL 16-35-55	35	050S	050W	4301332352	14267	Indian	OW	P	
UTE TRIBAL 10-35-55	35	050S	050W	4301332353	13645	Indian	OW	P	
UTE TRIBAL 12-36-55	36	050S	050W	4301332354	13643	Indian	OW	P	
UTE TRIBAL 14-36-55	36	050S	050W	4301332355	14262	Indian	OW	P	
UTE TRIBAL 16-36-55	36	050S	050W	4301332356	14122	Indian	OW	P	
UTE TRIBAL 4-33-55	33	050S	050W	4301332357	13685	Indian	OW	P	
UTE TRIBAL 15-17-55	17	050S	050W	4301332358	13698	Indian	OW	P	
UTE TRIBAL 12-14-54	14	050S	040W	4301332369	13647	Indian	OW	P	
UTE TRIBAL 3-20-54	20	050S	040W	4301332377	13955	Indian	OW	P	BRUNDAGE CANYON
UTE TRIBAL 4-21-54	21	050S	040W	4301332378	13907	Indian	OW	P	
UTE TRIBAL 9-20-54	20	050S	040W	4301332379	13906	Indian	OW	P	
UTE TRIBAL 5-30-54	30	050S	040W	4301332380	13905	Indian	OW	P	
UTE TRIBAL 16-21-54	21	050S	040W	4301332381	13912	Indian	OW	P	BERRY PILOT EOR 246-02
UTE TRIBAL 15-30-54	30	050S	040W	4301332382	13944	Indian	OW	P	
UTE TRIBAL 9-30-54	30	050S	040W	4301332383	14050	Indian	OW	P	
UTE TRIBAL 14-21-54	21	050S	040W	4301332384	13946	Indian	OW	P	
UTE TRIBAL 12-21-54	21	050S	040W	4301332385	13928	Indian	OW	P	
UTE TRIBAL 15-20-54	20	050S	040W	4301332386	13911	Indian	OW	P	
UTE TRIBAL 13-28-54	28	050S	040W	4301332387	13908	Indian	OW	P	
UTE TRIBAL 9-28-54	28	050S	040W	4301332388	13910	Indian	OW	P	
UTE TRIBAL 15-28-54	28	050S	040W	4301332389	13909	Indian	OW	P	
UTE TRIBAL 9-25-55	25	050S	050W	4301332390	13715	Indian	OW	P	
MOON TRIBAL 6-27-54	27	050S	040W	4301332407	13969	Indian	OW	P	
MOON TRIBAL 14-27-54	27	050S	040W	4301332408	13998	Indian	OW	P	
UTE TRIBAL 3-32-54	32	050S	040W	4301332410	13949	Indian	OW	P	
UTE TRIBAL 7-32-54	32	050S	040W	4301332411	13936	Indian	OW	P	
UTE TRIBAL 7-33-54	33	050S	040W	4301332413	13945	Indian	OW	P	
UTE TRIBAL 11-20-55	20	050S	050W	4301332415	14269	Indian	OW	P	
UTE TRIBAL 1-27-55	27	050S	050W	4301332416	13947	Indian	OW	P	
UTE TRIBAL 3-27-55	27	050S	050W	4301332417	14022	Indian	OW	P	
UTE TRIBAL 7-27-55	27	050S	050W	4301332418	13948	Indian	OW	P	
UTE TRIBAL 10-28-55	28	050S	050W	4301332419	14580	Indian	OW	P	
UTE TRIBAL 6-32-55	32	050S	050W	4301332420	14895	Indian	OW	P	
UTE TRIBAL 8-32-55	32	050S	050W	4301332421	14896	Indian	OW	P	
UTE TRIBAL 2-36-55	36	050S	050W	4301332422	13937	Indian	OW	P	
UTE TRIBAL 8-36-55	36	050S	050W	4301332423	14021	Indian	OW	P	
UTE TRIBAL 13-16-54	16	050S	040W	4301332511	13981	Indian	OW	P	
UTE TRIBAL 13-23-55	23	050S	050W	4301332513	13975	Indian	OW	P	
UTE TRIBAL 7-23-55	23	050S	050W	4301332514	13976	Indian	OW	P	
UTE TRIBAL 5-33-54	33	050S	040W	4301332521	14060	Indian	OW	P	
UTE TRIBAL 11-33-54	33	050S	040W	4301332522	14061	Indian	OW	P	
UTE TRIBAL 14-32-54	32	050S	040W	4301332523	14062	Indian	OW	P	
UTE TRIBAL 1-23-55	23	050S	050W	4301332524	14044	Indian	OW	P	
UTE TRIBAL 5-29-54	29	050S	040W	4301332525	14045	Indian	OW	P	
UTE TRIBAL 1-31-54	31	050S	040W	4301332526	14116	Indian	OW	P	
UTE TRIBAL 3-31-54	31	050S	040W	4301332527	14109	Indian	OW	P	
UTE TRIBAL 7-31-54	31	050S	040W	4301332528	14160	Indian	OW	P	
UTE TRIBAL 9-31-54	31	050S	040W	4301332529	14177	Indian	OW	P	
UTE TRIBAL 11-31-54	31	050S	040W	4301332530	14163	Indian	OW	P	
UTE TRIBAL 3-23-55	23	050S	050W	4301332536	14077	Indian	OW	P	
UTE TRIBAL 5-23-55	23	050S	050W	4301332537	14108	Indian	OW	P	
UTE TRIBAL 9-32-54	32	050S	040W	4301332538	14199	Indian	OW	P	

UTE TRIBAL 5-32-54	32	050S	040W	4301332539	14112	Indian	OW	P	
MOON TRIBAL 10-27-54	27	050S	040W	4301332540	14195	Indian	OW	P	
MOON TRIBAL 12-27-54	27	050S	040W	4301332541	14161	Indian	OW	P	
MOON TRIBAL 8-27-54	27	050S	040W	4301332543	14139	Indian	OW	P	
UTE TRIBAL 9-33-54	33	050S	040W	4301332549	14162	Indian	OW	P	
WILLIAMSON TRIBAL 3-34-54	34	050S	040W	4301332550	14222	Indian	OW	P	
WILLIAMSON TRIBAL 5-34-54	34	050S	040W	4301332551	14235	Indian	OW	P	
FEDERAL 6-2-65	2	060S	050W	4301332557	14655	Federal	OW	P	
UTE TRIBAL 15-29-54	29	050S	040W	4301332561	14316	Indian	OW	P	
UTE TRIBAL 7-29-54	29	050S	040W	4301332562	14354	Indian	OW	P	
UTE TRIBAL 11-29-54	29	050S	040W	4301332563	14337	Indian	OW	P	
UTE TRIBAL 13-29-54	29	050S	040W	4301332564	14315	Indian	OW	P	
UTE TRIBAL 4-29-54	29	050S	040W	4301332565	14367	Indian	OW	P	
UTE TRIBAL 9-29-54	29	050S	040W	4301332566	14369	Indian	OW	P	
UTE TRIBAL 1-35-54	35	050S	040W	4301332567	14266	Indian	OW	P	
UTE TRIBAL 11-13-54	13	050S	040W	4301332568	14281	Indian	OW	P	
UTE TRIBAL 6-24-54	24	050S	040W	4301332570	14299	Indian	OW	P	
UTE TRIBAL 13-18-54	18	050S	040W	4301332571	14388	Indian	OW	P	
UTE TRIBAL 12-29-54	29	050S	040W	4301332572	14336	Indian	OW	P	
UTE TRIBAL 4-24-54	24	050S	040W	4301332573	14247	Indian	OW	P	
UTE TRIBAL 6-14-54	14	050S	040W	4301332586	15270	Indian	OW	P	
UTE TRIBAL 10-15-54	15	050S	040W	4301332587	14194	Indian	OW	P	
UTE TRIBAL 16-15-54	15	050S	040W	4301332588	14311	Indian	OW	P	
UTE TRIBAL 11-16-54	16	050S	040W	4301332589	14178	Indian	OW	P	
UTE TRIBAL 8-22-54	22	050S	040W	4301332590	14219	Indian	OW	P	
UTE TRIBAL 2-22-54	22	050S	040W	4301332591	14328	Indian	OW	P	
UTE TRIBAL 10-22-54	22	050S	040W	4301332592	14218	Indian	OW	P	
UTE TRIBAL 14-22-54	22	050S	040W	4301332593	14220	Indian	OW	P	
UTE TRIBAL 13-13-55	13	050S	050W	4301332599	15134	Indian	OW	P	
UTE TRIBAL 13-14-55	14	050S	050W	4301332600	14236	Indian	OW	P	
UTE TRIBAL 13-15-55	15	050S	050W	4301332602	14263	Indian	OW	P	
UTE TRIBAL 10-21-55	21	050S	050W	4301332603	14385	Indian	OW	P	
UTE TRIBAL 2-22-55	22	050S	050W	4301332604	14268	Indian	OW	P	
UTE TRIBAL 3-22-55	22	050S	050W	4301332605	14298	Indian	OW	P	
UTE TRIBAL 9-22-55	22	050S	050W	4301332606	14330	Indian	OW	P	
UTE TRIBAL 11-22-55	22	050S	050W	4301332607	14329	Indian	OW	P	
UTE TRIBAL 5-27-55	27	050S	050W	4301332614	14881	Indian	OW	P	
UTE TRIBAL 11-27-55	27	050S	050W	4301332615	14882	Indian	OW	P	
UTE TRIBAL 12-22-55	22	050S	050W	4301332616	14370	Indian	OW	P	
UTE TRIBAL 15-22-55	22	050S	050W	4301332617	14921	Indian	OW	P	
UTE TRIBAL 8-25-55	25	050S	050W	4301332620	14365	Indian	OW	P	
UTE TRIBAL 4-20-54	20	050S	040W	4301332621	14518	Indian	OW	P	BRUNDAGE CANYON
UTE TRIBAL 6-20-54	20	050S	040W	4301332622	14382	Indian	OW	P	BRUNDAGE CANYON
UTE TRIBAL 5-22-54	22	050S	040W	4301332624	14547	Indian	OW	P	
UTE TRIBAL 3-30-54	30	050S	040W	4301332625	14364	Indian	OW	P	
UTE TRIBAL 3-10-54	10	050S	040W	4301332663	14414	Indian	OW	P	
UTE TRIBAL 11-5-54	5	050S	040W	4301332664	14415	Indian	OW	P	
UTE TRIBAL 15-32-54	32	050S	040W	4301332666	14460	Indian	OW	P	
UTE TRIBAL 8-31-55	31	050S	050W	4301332673	14407	Indian	OW	P	
UTE TRIBAL 3-35-54	35	050S	040W	4301332675	14656	Indian	OW	P	
UTE TRIBAL 2-30-55	30	050S	050W	4301332680	14427	Indian	OW	P	
UTE TRIBAL 9-17-54	17	050S	040W	4301332687	15309	Indian	OW	P	
UTE TRIBAL 13-31-54	31	050S	040W	4301332688	14517	Indian	OW	P	
UTE TRIBAL 14-19-54	19	050S	040W	4301332690	14546	Indian	OW	P	
UTE TRIBAL 16-19-54	19	050S	040W	4301332691	14491	Indian	OW	P	
UTE TRIBAL 13-32-54	32	050S	040W	4301332692	14490	Indian	OW	P	
UTE TRIBAL 11-14-55	14	050S	050W	4301332693	15136	Indian	OW	P	
UTE TRIBAL 8-28-55	28	050S	050W	4301332694	14574	Indian	OW	P	
FEDERAL 6-1-65	1	060S	050W	4301332699	15776	Federal	OW	P	
UTE TRIBAL 9-15-55	15	050S	050W	4301332701	14573	Indian	OW	P	
UTE TRIBAL 14-20-54	20	050S	040W	4301332702	14459	Indian	OW	P	
#1 DLB 12-15-56	15	050S	060W	4301332710	14943	Fee	GW	P	
UTE TRIBAL 12-19-54	19	050S	040W	4301332716	14627	Indian	OW	P	
UTE TRIBAL 10-19-54	19	050S	040W	4301332717	14628	Indian	OW	P	
UTE TRIBAL 16-30-54	30	050S	040W	4301332718	14604	Indian	OW	P	
UTE TRIBAL 11-12-55	12	050S	050W	4301332721	14605	Indian	OW	P	

NIELSEN MARSING 13-14-56	14	050S	060W	4301332737	15060	Fee	OW	P	
TAYLOR HERRICK 10-22-56	22	050S	060W	4301332738	15058	Fee	OW	P	
UTE TRIBAL 16-20-54	20	050S	040W	4301332739	14671	Indian	OW	P	
UTE TRIBAL 10-20-54	20	050S	040W	4301332740	14691	Indian	OW	P	
UTE TRIBAL 4-28-54	28	050S	040W	4301332741	14672	Indian	OW	P	
UTE TRIBAL 13-33-54	33	050S	040W	4301332742	14736	Indian	OW	P	
UTE TRIBAL 15-31-54	31	050S	040W	4301332743	14690	Indian	OW	P	
UTE TRIBAL 8-30-54	30	050S	040W	4301332746	15583	Indian	OW	P	
UTE TRIBAL 10-25-55	25	050S	050W	4301332749	14758	Indian	OW	P	
UTE TRIBAL 14-25-55	25	050S	050W	4301332750	14798	Indian	OW	P	
UTE TRIBAL 3-36-55	36	050S	050W	4301332751	14842	Indian	OW	P	
UTE TRIBAL 16-16-55	16	050S	050W	4301332757	14865	Indian	OW	P	
UTE TRIBAL 3-21-55	21	050S	050W	4301332758	15112	Indian	OW	P	
UTE TRIBAL 16-25-55	25	050S	050W	4301332759	14821	Indian	OW	P	
UTE TRIBAL 1-36-55	36	050S	050W	4301332760	14822	Indian	OW	P	
UTE TRIBAL 7-22-54	22	050S	040W	4301332761	15661	Indian	OW	P	
UTE TRIBAL 2-31-54	31	050S	040W	4301332762	14845	Indian	OW	P	
UTE TRIBAL 2-28-54	28	050S	040W	4301332763	14723	Indian	OW	P	
UTE TRIBAL 10-28-54	28	050S	040W	4301332764	14722	Indian	OW	P	
UTE TRIBAL 12-28-54	28	050S	040W	4301332765	14701	Indian	OW	P	
UTE TRIBAL 8-28-54	28	050S	040W	4301332766	14777	Indian	OW	P	
UTE TRIBAL 4-31-54	31	050S	040W	4301332767	14494	Indian	OW	P	
UTE TRIBAL 15-33-54	33	050S	040W	4301332768	15210	Indian	OW	P	
UTE TRIBAL 12-25-55	25	050S	050W	4301332769	14799	Indian	OW	P	
UTE TRIBAL 16-24-54	24	050S	040W	4301332775	14762	Indian	OW	P	
UTE TRIBAL 14-25-54	25	050S	040W	4301332776	14753	Indian	OW	P	
UTE TRIBAL 8-25-54	25	050S	040W	4301332780	15280	Indian	OW	P	
UTE TRIBAL 9-35-54	35	050S	040W	4301332781	15535	Indian	OW	P	
MYRIN TRIBAL 14-19-55	19	050S	050W	4301332782	15184	Indian	OW	P	
UTE TRIBAL 6-30-55	30	050S	050W	4301332783	15163	Indian	OW	P	
MOON TRIBAL 4-23-54	23	050S	040W	4301332800	14985	Indian	OW	P	
MOON TRIBAL 5-27-54	27	050S	040W	4301332802	14984	Indian	OW	P	
UTE TRIBAL 2-32-54	32	050S	040W	4301332803	15151	Indian	OW	P	
UTE TRIBAL 15-35-54	35	050S	040W	4301332804	15185	Indian	OW	P	
UTE TRIBAL 5-35-54	35	050S	040W	4301332805	15485	Indian	OW	P	
UTE TRIBAL 13-35-54	35	050S	040W	4301332806	15292	Indian	OW	P	
UTE TRIBAL 11-35-54	35	050S	040W	4301332807	15317	Indian	OW	P	
UTE TRIBAL 8-19-54	19	050S	040W	4301332840	14946	Indian	OW	P	BRUNDAGE CANYON
UTE TRIBAL 13-20-55	20	050S	050W	4301332841	15097	Indian	OW	P	
UTE TRIBAL 16-22-54	22	050S	040W	4301332842	15015	Indian	OW	P	
MOON TRIBAL 6-23-54	23	050S	040W	4301332843	15113	Indian	OW	P	
UTE TRIBAL 11-26-54	26	050S	040W	4301332844	15233	Indian	OW	P	
MOON TRIBAL 11-27-54	27	050S	040W	4301332845	15135	Indian	OW	P	
MOON TRIBAL 15-27-54	27	050S	040W	4301332846	15115	Indian	OW	P	
UTE TRIBAL 10-31-54	31	050S	040W	4301332847	14956	Indian	OW	P	
ST TRIBAL 6-15-54	15	050S	040W	4301332848	16656	Indian	OW	P	
ST TRIBAL 2-15-54	15	050S	040W	4301332849	16959	Indian	OW	P	
ST TRIBAL 4-15-54	15	050S	040W	4301332850	17478	Indian	OW	P	
ST TRIBAL 8-15-54	15	050S	040W	4301332851	16279	Indian	OW	P	
UTE TRIBAL 11-25-54	25	050S	040W	4301332856	15430	Indian	OW	P	
UTE TRIBAL 3-30-55	30	050S	050W	4301332862	15340	Indian	OW	P	
UTE TRIBAL 7-19-55	19	050S	050W	4301332863	15279	Indian	OW	P	
UTE TRIBAL 8-19-55	19	050S	050W	4301332864	15241	Indian	OW	P	
UTE TRIBAL 6-19-54	19	050S	040W	4301332865	14947	Indian	OW	P	
UTE TRIBAL 12-20-54	20	050S	040W	4301332866	14924	Indian	OW	P	
UTE TRIBAL 3-21-54	21	050S	040W	4301332867	15554	Indian	OW	P	
UTE TRIBAL 2-26-54	26	050S	040W	4301332868	15231	Indian	OW	P	
UTE TRIBAL 8-31-54	31	050S	040W	4301332869	14970	Indian	OW	P	
UTE TRIBAL 8-32-54	32	050S	040W	4301332870	15152	Indian	OW	P	
UTE TRIBAL 4-33-54	33	050S	040W	4301332871	15040	Indian	OW	P	
UTE TRIBAL 6-33-54	33	050S	040W	4301332872	15059	Indian	OW	P	
UTE TRIBAL 9-22-54	22	050S	040W	4301332889	15607	Indian	OW	P	
UTE TRIBAL 5-26-54	26	050S	040W	4301332890	15268	Indian	OW	P	
UTE TRIBAL 13-26-54	26	050S	040W	4301332891	15287	Indian	OW	P	
UTE TRIBAL 6-28D-54	28	050S	040W	4301332892	15232	Indian	OW	P	
UTE TRIBAL 2-30D-54	30	050S	040W	4301332894	15298	Indian	OW	P	

UTE TRIBAL 4-32-54	32	050S	040W	4301332896	15555	Indian	OW	P	
UTE TRIBAL 6-32D-54	32	050S	040W	4301332897	15312	Indian	OW	P	
UTE TRIBAL 2-33D-54	33	050S	040W	4301332898	15271	Indian	OW	P	
UTE TRIBAL 12-32-54	32	050S	040W	4301332925	15503	Indian	OW	P	
UTE TRIBAL 16-32D-54	32	050S	040W	4301332926	16971	Indian	OW	P	
MOON TRIBAL 16-23-54	23	050S	040W	4301332927	15219	Indian	OW	P	
UTE TRIBAL 4-25-55	25	050S	050W	4301332928	15421	Indian	OW	P	
UTE TRIBAL 7-36-55	36	050S	050W	4301332929	15341	Indian	OW	P	
MOON TRIBAL 10-2-54	2	050S	040W	4301332931	15429	Indian	OW	P	
UTE TRIBAL 10-24-54	24	050S	040W	4301332932	15364	Indian	OW	P	
MYRIN TRIBAL 16-19-55	19	050S	050W	4301332934	15339	Indian	OW	P	
UTE TRIBAL 2-31-55	31	050S	050W	4301332935	15428	Indian	OW	P	
UTE TRIBAL 10-31-55	31	050S	050W	4301332936	15354	Indian	OW	P	
MOON TRIBAL 1-27-54	27	050S	040W	4301332937	15308	Indian	OW	P	
MOON TRIBAL 5-23-54	23	050S	040W	4301332938	15584	Indian	OW	P	
ST TRIBAL 7-18-54	18	050S	040W	4301332952	15724	Indian	OW	P	
ST TRIBAL 5-18-54	18	050S	040W	4301332953	15781	Indian	OW	P	
UTE TRIBAL 15-15-54	15	050S	040W	4301332971	15310	Indian	OW	P	
UTE TRIBAL 4-19-54	19	050S	040W	4301332972	15382	Indian	OW	P	
UTE TRIBAL 8-20-54	20	050S	040W	4301332973	15245	Indian	OW	P	
UTE TRIBAL 2-20-54	20	050S	040W	4301332974	15269	Indian	OW	P	
UTE TRIBAL 7-15-55	15	050S	050W	4301332976	15311	Indian	OW	P	
UTE TRIBAL 10-15-55	15	050S	050W	4301332977	15380	Indian	OW	P	
UTE TRIBAL 1-15-55	15	050S	050W	4301332978	15299	Indian	OW	P	
UTE TRIBAL 14-15-55	15	050S	050W	4301332979	15369	Indian	OW	P	
UTE TRIBAL 11-15-55	15	050S	050W	4301332980	15342	Indian	OW	P	
UTE TRIBAL 14-18-55	18	050S	050W	4301332984	15671	Indian	OW	P	
UTE TRIBAL 14-24-56	24	050S	060W	4301332988	15740	Indian	OW	P	
UTE TRIBAL 7-24-56	24	050S	060W	4301332989	15782	Indian	OW	P	
UTE TRIBAL 11-25-56	25	050S	060W	4301332990	15627	Indian	OW	P	
UTE TRIBAL 7-25-56	25	050S	060W	4301332991	15617	Indian	OW	P	
UTE TRIBAL 5-25-56	25	050S	060W	4301332992	15648	Indian	OW	P	
UTE TRIBAL 3-25-56	25	050S	060W	4301332993	15561	Indian	OW	P	
UTE TRIBAL 13-15D-54	15	050S	040W	4301333039	15368	Indian	OW	P	
UTE TRIBAL 16-28D-54	28	050S	040W	4301333041	15377	Indian	OW	P	
UTE TRIBAL 14-31D-54	31	050S	040W	4301333042	15419	Indian	OW	P	
UTE TRIBAL 4-22-55	22	050S	050W	4301333044	15381	Indian	OW	P	
UTE TRIBAL 2-23-55	23	050S	050W	4301333045	15416	Indian	OW	P	
UTE TRIBAL 16-23-55	23	050S	050W	4301333046	15211	Indian	OW	P	
UTE TRIBAL 9-35-55	35	050S	050W	4301333047	15378	Indian	OW	P	
UTE TRIBAL 7-35-55	35	050S	050W	4301333048	15367	Indian	OW	P	
UTE TRIBAL 15-36-55	36	050S	050W	4301333049	15379	Indian	OW	P	
UTE TRIBAL 10-12-55	12	050S	050W	4301333055	15618	Indian	OW	P	
UTE TRIBAL 5-13-54	13	050S	040W	4301333075	15873	Indian	OW	P	
UTE TRIBAL 16-29-54	29	050S	040W	4301333076	17074	Indian	OW	P	
UTE TRIBAL 12-18-54	18	050S	040W	4301333077	15575	Indian	OW	P	
UTE TRIBAL 8-33-54	33	050S	040W	4301333089	15398	Indian	OW	P	
UTE TRIBAL 12-33-54	33	050S	040W	4301333090	15417	Indian	OW	P	
UTE TRIBAL 16-33-54	33	050S	040W	4301333091	15397	Indian	OW	P	
UTE TRIBAL 10-33-54	33	050S	040W	4301333092	15418	Indian	OW	P	
UTE TRIBAL 14-33-54	33	050S	040W	4301333093	15399	Indian	OW	P	
UTE TRIBAL 2-14-54	14	050S	040W	4301333111	16832	Indian	OW	P	
UTE TRIBAL 14-14-54	14	050S	040W	4301333112	15440	Indian	OW	P	
UTE TRIBAL 13-21-54	21	050S	040W	4301333113	15471	Indian	OW	P	
UTE TRIBAL 11-21-54	21	050S	040W	4301333115	15470	Indian	OW	P	
UTE TRIBAL 11-22-54	22	050S	040W	4301333116	15662	Indian	OW	P	
UTE TRIBAL 2-21-55	21	050S	050W	4301333117	15582	Indian	OW	P	
UTE TRIBAL 4-28-55	28	050S	050W	4301333118	15506	Indian	OW	P	
UTE TRIBAL 8-29-55	29	050S	050W	4301333119	15507	Indian	OW	P	
UTE TRIBAL 6-29-55	29	050S	050W	4301333120	15504	Indian	OW	P	
TAYLOR FEE 13-22-56	22	050S	060W	4301333121	15525	Fee	OW	P	
WILCOX ELIASON 7-15-56	15	050S	060W	4301333122	15526	Fee	OW	P	
UTE TRIBAL 14-16-54	16	050S	040W	4301333123	15639	Indian	OW	P	
UTE TRIBAL 1-16-54	16	050S	040W	4301333128	15420	Indian	OW	P	
UTE TRIBAL 7-16-54	16	050S	040W	4301333130	15455	Indian	OW	P	
UTE TRIBAL 12-16-54	16	050S	040W	4301333131	15456	Indian	OW	P	

UTE TRIBAL 16-17-54	17	050S	040W	4301333132	15524	Indian	OW	P	
UTE TRIBAL 10-17-54	17	050S	040W	4301333133	15581	Indian	OW	P	
UTE TRIBAL 12-24D-55	24	050S	050W	4301333134	15567	Indian	OW	P	
WILCOX FEE 1-20-56	20	050S	060W	4301333150	15745	Fee	OW	P	
WILCOX FEE 15-16-56	16	050S	060W	4301333151	15527	Fee	OW	P	
NIELSEN FEE 13-11-56	11	050S	060W	4301333152	15600	Fee	OW	P	
UTE TRIBAL 2-29-54	29	050S	040W	4301333153	15919	Indian	OW	P	
UTE TRIBAL 14-29-54	29	050S	040W	4301333154	15831	Indian	OW	P	
UTE TRIBAL 10-29-54	29	050S	040W	4301333155	15847	Indian	OW	P	
UTE TRIBAL 10-24D-55	24	050S	050W	4301333156	15556	Indian	OW	P	
UTE TRIBAL 10-29D-55	29	050S	050W	4301333157	15505	Indian	OW	P	
UTE TRIBAL 6-29-54	29	050S	040W	4301333172	15846	Indian	OW	P	
UTE TRIBAL 12Q-25-55	25	050S	050W	4301333184	15744	Indian	OW	P	
UTE TRIBAL 3G-31-54	31	050S	040W	4301333185	15746	Indian	OW	P	
UTE TRIBAL 1I-36-55	36	050S	050W	4301333186	15865	Indian	OW	P	
UTE TRIBAL 6-23D-55	23	050S	050W	4301333187	15996	Indian	OW	P	
UTE TRIBAL 8-14-54	14	050S	040W	4301333204	15656	Indian	OW	P	
UTE TRIBAL 10-14-54	14	050S	040W	4301333205	15680	Indian	OW	P	
UTE TRIBAL 11-15-54	15	050S	040W	4301333206	15643	Indian	OW	P	
UTE TRIBAL 9-16-54	16	050S	040W	4301333207	15660	Indian	OW	P	
UTE TRIBAL 3-22-54	22	050S	040W	4301333208	15640	Indian	OW	P	
UTE TRIBAL 15-13D-55	13	050S	050W	4301333212	15642	Indian	OW	P	
UTE TRIBAL 6-22D-55	22	050S	050W	4301333213	16831	Indian	OW	P	
UTE TRIBAL 11-36D-55	36	050S	050W	4301333214	15702	Indian	OW	P	
UTE TRIBAL 1-22D-54	22	050S	040W	4301333215	15641	Indian	OW	P	
BERRY TRIBAL 1-23-54	23	050S	040W	4301333216	15931	Indian	OW	P	
BERRY TRIBAL 15-23-54	23	050S	040W	4301333217	15932	Indian	OW	P	
UTE TRIBAL 9-36D-55	36	050S	050W	4301333239	15933	Indian	OW	P	
UTE TRIBAL 12-32-55	32	050S	050W	4301333266	15681	Indian	OW	P	
UTE TRIBAL 16-22D-55	22	050S	050W	4301333267	15703	Indian	OW	P	
UTE TRIBAL 11-13-55	13	050S	050W	4301333268	15692	Indian	OW	P	
UTE TRIBAL 7-14-55	14	050S	050W	4301333269	15693	Indian	OW	P	
UTE TRIBAL 4-14D-54	14	050S	040W	4301333270	15679	Indian	OW	P	
UTE TRIBAL 9S-19-54	19	050S	040W	4301333276	16153	Indian	OW	P	
UTE TRIBAL 14Q-28-54	28	050S	040W	4301333277	15818	Indian	OW	P	
UTE TRIBAL 14-28D-54	28	050S	040W	4301333278	15817	Indian	OW	P	
UTE TRIBAL 1-14D-55	14	050S	050W	4301333279	18408	Indian	OW	P	
UTE TRIBAL 10-18-54	18	050S	040W	4301333300	15747	Indian	OW	P	
UTE TRIBAL 5-21-54	21	050S	040W	4301333324	15748	Indian	OW	P	
UTE TRIBAL 6-31D-54	31	050S	040W	4301333325	16185	Indian	OW	P	
UTE TRIBAL 16-31D-54	31	050S	040W	4301333326	15800	Indian	OW	P	
UTE TRIBAL 16-13D-55	13	050S	050W	4301333327	15891	Indian	OW	P	
UTE TRIBAL 9-13D-55	13	050S	050W	4301333328	15892	Indian	OW	P	
UTE TRIBAL 15-21-55	21	050S	050W	4301333357	15791	Indian	OW	P	
UTE TRIBAL 10-23D-55	23	050S	050W	4301333358	15799	Indian	OW	P	
UTE TRIBAL 9-26D-55	26	050S	050W	4301333359	15853	Indian	OW	P	
UTE TRIBAL 10-26D-55	26	050S	050W	4301333360	15852	Indian	OW	P	
UTE TRIBAL 14-26D-55	26	050S	050W	4301333361	15938	Indian	OW	P	
UTE TRIBAL 15-26D-55	26	050S	050W	4301333362	15869	Indian	OW	P	
UTE TRIBAL 3-32D-55	32	050S	050W	4301333363	15936	Indian	OW	P	
UTE TRIBAL 13-14-54	14	050S	040W	4301333364	15790	Indian	OW	P	
MOON TRIBAL 7-27D-54	27	050S	040W	4301333365	15935	Indian	OW	P	
14-11-56 DLB	11	050S	060W	4301333378	15801	Fee	OW	P	
UTE TRIBAL 4-32-55	32	050S	050W	4301333379	15819	Indian	OW	P	
UTE TRIBAL 13H-16-55	16	050S	050W	4301333380	18357	Indian	OW	P	
BERRY TRIBAL 7-23-54	23	050S	040W	4301333381	15934	Indian	OW	P	
BERRY TRIBAL 9-34-54	34	050S	040W	4301333382	16024	Indian	OW	P	
BERRY TRIBAL 7-34-54	34	050S	040W	4301333383	16102	Indian	OW	P	
BERRY TRIBAL 4-34-54	34	050S	040W	4301333384	16588	Indian	OW	P	
FEDERAL 2-2-65	2	060S	050W	4301333385	16150	Federal	OW	P	
FEDERAL 10-3-65	3	060S	050W	4301333386	16297	Federal	OW	P	
FEDERAL 5-4-65	4	060S	050W	4301333387	17599	Federal	OW	P	
UTE TRIBAL 1A-29-54	29	050S	040W	4301333393	17075	Indian	OW	P	
BERRY TRIBAL 15-34-54	34	050S	040W	4301333411	16037	Indian	OW	P	
BERRY TRIBAL 8-23D-54	23	050S	040W	4301333417	16101	Indian	OW	P	
UTE TRIBAL 12-29D-55	29	050S	050W	4301333418	17307	Indian	OW	P	

UTE TRIBAL 8-24-55	24	050S	050W	4301333420	15997	Indian	OW	P	
UTE TRIBAL 5-25D-55	25	050S	050W	4301333421	16589	Indian	OW	P	
BERRY TRIBAL 10-34D-54	34	050S	040W	4301333422	16038	Indian	OW	P	
1-15-56 DLB	15	050S	060W	4301333447	15854	Fee	OW	P	
FEDERAL 5-3-64	3	060S	040W	4301333448	16098	Federal	OW	P	
FEDERAL 8-1-64	1	060S	040W	4301333449	16152	Federal	OW	P	
FEDERAL 5-4-64	4	060S	040W	4301333450	17851	Federal	OW	P	
FEDERAL 11-10-65	10	060S	050W	4301333451	16281	Federal	OW	P	
BERRY TRIBAL 16-34D-54	34	050S	040W	4301333464	16280	Indian	OW	P	
BERRY TRIBAL 9-23-54	23	050S	040W	4301333465	16590	Indian	OW	P	
UTE TRIBAL 6-26D-55	26	050S	050W	4301333476	16657	Indian	OW	P	
UTE TRIBAL 7-26D-55	26	050S	050W	4301333477	16658	Indian	OW	P	
UTE TRIBAL 11-26D-55	26	050S	050W	4301333478	16659	Indian	OW	P	
UTE TRIBAL 14Q-30-54	30	050S	040W	4301333479	16151	Indian	OW	P	
FEDERAL 5-6-65	6	060S	050W	4301333489	17852	Federal	OW	P	
FEDERAL 16-5-65	5	060S	050W	4301333490	16833	Federal	OW	P	
FEDERAL 6-11-65	11	060S	050W	4301333491	16335	Federal	OW	P	
LC TRIBAL 14-2-56	2	050S	060W	4301333492	18358	Indian	OW	P	
UTE TRIBAL 1-31-55	31	050S	050W	4301333501	17104	Indian	OW	P	
UTE TRIBAL 9-31-55	31	050S	050W	4301333508	17103	Indian	OW	P	
BERRY TRIBAL 11-34D-54	34	050S	040W	4301333529	16099	Indian	OW	P	
LC TRIBAL 2-16D-56	16	050S	060W	4301333538	17305	Indian	OW	P	
LC TRIBAL 4-16-56	16	050S	060W	4301333539	16272	Indian	OW	P	
LC TRIBAL 3-17-56	17	050S	060W	4301333541	16459	Indian	OW	P	
FEDERAL 10-2-65	2	060S	050W	4301333542	16181	Federal	OW	P	
UTE TRIBAL 4-20D-55	20	050S	050W	4301333549	18075	Indian	OW	P	
UTE TRIBAL 8-23D-55	23	050S	050W	4301333552	16662	Indian	OW	P	
LC TRIBAL 8-28-46	28	040S	060W	4301333576	16155	Indian	OW	P	
LC TRIBAL 7-3-56	3	050S	060W	4301333577	16379	Indian	OW	P	
LC TRIBAL 3-5-56	5	050S	060W	4301333580	17082	Indian	OW	P	
FEDERAL 8-2D-64	2	060S	040W	4301333581	16100	Federal	OW	P	
LC TRIBAL 13H-3-56	3	050S	060W	4301333591	18129	Indian	OW	P	
LC FEE 6-12-57	12	050S	070W	4301333593	17083	Fee	OW	P	
UTE TRIBAL 4-26D-54	26	050S	040W	4301333595	16591	Indian	OW	P	
LC TRIBAL 8-4-56	4	050S	060W	4301333605	17046	Indian	OW	P	
LC TRIBAL 12H-6-56	6	050S	060W	4301333606	18037	Indian	OW	P	
LC TRIBAL 7-7D-56	7	050S	060W	4301333607	18038	Indian	OW	P	
LC TRIBAL 1-9-56	9	050S	060W	4301333608	16380	Indian	OW	P	
UTE TRIBAL 5-14-54	14	050S	040W	4301333619	16945	Indian	OW	P	
UTE TRIBAL 10-26D-54	26	050S	040W	4301333620	16663	Indian	OW	P	
UTE TRIBAL 7-26D-54	26	050S	040W	4301333621	16664	Indian	OW	P	
UTE TRIBAL 13-36D-55	36	050S	050W	4301333624	17744	Indian	OW	P	
UTE TRIBAL 6-26D-54	26	050S	040W	4301333625	16619	Indian	OW	P	
UTE TRIBAL 1-22D-55	22	050S	050W	4301333626	16777	Indian	OW	P	
UTE TRIBAL 4-23D-55	23	050S	050W	4301333627	16818	Indian	OW	P	
UTE TRIBAL 2-27D-55	27	050S	050W	4301333628	16746	Indian	OW	P	
UTE TRIBAL 12-28D-55	28	050S	050W	4301333645	17999	Indian	OW	P	
UTE TRIBAL 13-28D-55	28	050S	050W	4301333646	18000	Indian	OW	P	
UTE TRIBAL 14-26D-54	26	050S	040W	4301333673	16299	Indian	OW	P	
UTE FEE 7-13D-55	13	050S	050W	4301333674	18089	Fee	OW	P	
UTE TRIBAL 9-20D-55	20	050S	050W	4301333675	17309	Indian	OW	P	
LC TRIBAL 11-17-56	17	050S	060W	4301333677	17600	Indian	OW	P	
UTE TRIBAL 1-26D-54	26	050S	040W	4301333680	16638	Indian	OW	P	
UTE TRIBAL 3-26D-54	26	050S	040W	4301333681	16665	Indian	OW	P	
UTE TRIBAL 8-26D-54	26	050S	040W	4301333682	17031	Indian	OW	P	
UTE TRIBAL 10-27D-55	27	050S	050W	4301333683	16666	Indian	OW	P	
UTE TRIBAL 14-27D-55	27	050S	050W	4301333684	16667	Indian	OW	P	
UTE TRIBAL 12-21D-55	21	050S	050W	4301333694	16296	Indian	OW	P	
UTE TRIBAL 5-21D-55	21	050S	050W	4301333706	16298	Indian	OW	P	
UTE TRIBAL 2-29D-55	29	050S	050W	4301333714	16854	Indian	OW	P	
UTE TRIBAL 7-29D-55	29	050S	050W	4301333715	16853	Indian	OW	P	
UTE TRIBAL 13-22D-55	22	050S	050W	4301333716	16668	Indian	OW	P	
UTE TRIBAL 14-22D-55	22	050S	050W	4301333717	16669	Indian	OW	P	
UTE FEE 2-13-55	13	050S	050W	4301333720	18659	Indian	OW	P	
UTE TRIBAL 7-22D-55	22	050S	050W	4301333721	16670	Indian	OW	P	
UTE TRIBAL 10-22D-55	22	050S	050W	4301333722	16671	Indian	OW	P	

UTE TRIBAL 3-29-55	29	050S	050W	4301333723	16857	Indian	OW	P	
BERRY TRIBAL 10-23D-54	23	050S	040W	4301333724	16592	Indian	OW	P	
BERRY TRIBAL 11-23D-54	23	050S	040W	4301333725	16672	Indian	OW	P	
UTE TRIBAL 4-24D-55	24	050S	050W	4301333726	16673	Indian	OW	P	
FEDERAL 6-6D-64	6	060S	040W	4301333745	17084	Federal	OW	P	
UTE TRIBAL 15-26D-54	26	050S	040W	4301333768	17450	Indian	OW	P	
UTE TRIBAL 1-14D-54	14	050S	040W	4301333769	17483	Indian	OW	P	
UTE TRIBAL 12-35D-55	35	050S	050W	4301333782	16856	Indian	OW	P	
UTE TRIBAL 11-35-55	35	050S	050W	4301333783	16855	Indian	OW	P	
UTE TRIBAL 1-28D-55	28	050S	050W	4301333784	16852	Indian	OW	P	
UTE TRIBAL 16-27D-55	27	050S	050W	4301333786	17800	Indian	OW	P	
UTE TRIBAL 9-28D-55	28	050S	050W	4301333787	16887	Indian	OW	P	
UTE TRIBAL 7-28D-55	28	050S	050W	4301333788	16886	Indian	OW	P	
UTE TRIBAL 11-32D-54	32	050S	040W	4301333793	17003	Indian	OW	P	
UTE TRIBAL 9-14D-54	14	050S	040W	4301333796	17482	Indian	OW	P	
UTE TRIBAL 4-27D-55	27	050S	050W	4301333797	16700	Indian	OW	P	
FOY TRIBAL 12H-33-55	33	050S	050W	4301333799	18232	Indian	OW	P	
UTE TRIBAL 9-32D-55	32	050S	050W	4301333800	18361	Indian	OW	P	
UTE TRIBAL 12-26D-54	26	050S	040W	4301333801	16639	Indian	OW	P	
UTE TRIBAL 8-26D-55	26	050S	050W	4301333859	17859	Indian	OW	P	
BERRY TRIBAL 2-34D-54	34	050S	040W	4301333867	17889	Indian	OW	P	
UTE TRIBAL 3-35D-55	35	050S	050W	4301333888	17421	Indian	OW	P	
UTE TRIBAL 10-32-54	32	050S	040W	4301333902	16819	Indian	OW	P	
UTE TRIBAL 12-31D-54	31	050S	040W	4301333907	17480	Indian	OW	P	
UTE TRIBAL 12-23D-55	23	050S	050W	4301333908	17814	Indian	OW	P	
UTE TRIBAL 14-20D-55	20	050S	050W	4301333909	18559	Indian	OW	P	
UTE TRIBAL 6-20D-55	20	050S	050W	4301333910	18481	Indian	OW	P	
UTE TRIBAL 12-20-55	20	050S	050W	4301333911	18520	Indian	OW	P	
UTE TRIBAL 14-24D-55	24	050S	050W	4301333912	16943	Indian	OW	P	
UTE TRIBAL 14-23D-55	23	050S	050W	4301333915	17457	Indian	OW	P	
ST TRIBAL 1-15D-54	15	050S	040W	4301333916	16889	Indian	OW	P	
ST TRIBAL 7-15D-54	15	050S	040W	4301333950	16972	Indian	OW	P	
ST TRIBAL 9-15D-54	15	050S	040W	4301333951	16973	Indian	OW	P	
UTE TRIBAL 15-35D-55	35	050S	050W	4301333954	17417	Indian	OW	P	
UTE TRIBAL 14-35D-55	35	050S	050W	4301333955	17416	Indian	OW	P	
UTE TRIBAL 16-26D-55	26	050S	050W	4301333965	17418	Indian	OW	P	
FEDERAL 1-2D-65	2	060S	050W	4301333966	16888	Federal	OW	P	
UTE TRIBAL 1-35D-55	35	050S	050W	4301333967	17420	Indian	OW	P	
UTE TRIBAL 10-36D-55	36	050S	050W	4301333968	17743	Indian	OW	P	
UTE TRIBAL 4-26D-55	26	050S	050W	4301333978	17455	Indian	OW	P	
UTE TRIBAL 2-26D-55	26	050S	050W	4301333979	17456	Indian	OW	P	
BERRY TRIBAL 14-23D-54	23	050S	040W	4301333989	17903	Indian	OW	P	
FEDERAL 3-2D-65	2	060S	050W	4301334001	16944	Federal	OW	P	
UTE TRIBAL 13-26D-55	26	050S	050W	4301334002	17481	Indian	OW	P	
FEDERAL 7-1D-65	1	060S	050W	4301334015	17775	Federal	OW	P	
FEDERAL 2-2D-64	2	060S	040W	4301334018	17086	Federal	OW	P	
FEDERAL 7-6D-64	6	060S	040W	4301334020	17085	Federal	OW	P	
UTE TRIBAL 6-35D-55	35	050S	050W	4301334028	17785	Indian	OW	P	
UTE TRIBAL 16-26-54	26	050S	040W	4301334042	17413	Indian	OW	P	
BERRY TRIBAL 13-23-54	23	050S	040W	4301334043	17100	Indian	OW	P	
UTE TRIBAL 11-28-55	28	050S	050W	4301334057	18001	Indian	OW	P	
UTE TRIBAL 8-27D-55	27	050S	050W	4301334058	17842	Indian	OW	P	
ST TRIBAL 3-15D-54	15	050S	040W	4301334059	17477	Indian	OW	P	
ST TRIBAL 5-15D-54	15	050S	040W	4301334060	17479	Indian	OW	P	
FEDERAL 7-11D-65	11	060S	050W	4301334061	17776	Federal	OW	P	
FEDERAL 7-3D-65	3	060S	050W	4301334065	17124	Federal	OW	P	
MOON TRIBAL 16-27D-54	27	050S	040W	4301334109	17414	Indian	OW	P	
UTE TRIBAL 15-22D-54	22	050S	040W	4301334116	17415	Indian	OW	P	
UTE TRIBAL 13-35D-55	35	050S	050W	4301334117	18442	Indian	OW	P	
UTE TRIBAL 12-26D-55	26	050S	050W	4301334118	17786	Indian	OW	P	
LC TRIBAL 13-16D-56	16	050S	060W	4301334282	17601	Indian	OW	P	
FEDERAL 11-6D-64	6	060S	040W	4301334284	17615	Federal	OW	P	
FEDERAL 14-6D-64	6	060S	040W	4301334285	17616	Federal	OW	P	
FEDERAL 2-6D-64	6	060S	040W	4301334286	17663	Federal	OW	P	
FEDERAL 3-5D-64	5	060S	040W	4301334287	17617	Federal	OW	P	
FEDERAL 6-5D-64	5	060S	040W	4301334288	17649	Federal	OW	P	

SFW TRIBAL 10-10D-54	10	050S	040W	4301334295	17564	Indian	OW	P	
SFW TRIBAL 9-10D-54	10	050S	040W	4301334296	17565	Indian	OW	P	
STATE TRIBAL 16-10-54	10	050S	040W	4301350245	17553	Indian	OW	P	
UTE TRIBAL 6-14D-55	14	050S	050W	4301350246	17602	Indian	OW	P	
SFW FEE 15-10-54	10	050S	040W	4301350247	17566	Fee	OW	P	
FEDERAL 5-5D-64	5	060S	040W	4301350259	17648	Federal	OW	P	
LC TRIBAL 6-22D-56	22	050S	060W	4301350260	17567	Indian	OW	P	
FEDERAL 12-6D-64	6	060S	040W	4301350261	17618	Federal	OW	P	
LC TRIBAL 4-27D-56	27	050S	060W	4301350262	17568	Indian	OW	P	
FEDERAL 4-5D-64	5	060S	040W	4301350263	17661	Federal	OW	P	
FEDERAL 1-6-64	6	060S	040W	4301350266	17662	Federal	OW	P	
FEDERAL 4-6D-64	6	060S	040W	4301350267	17651	Federal	OW	P	
FEDERAL 3-6D-64	6	060S	040W	4301350268	17650	Federal	OW	P	
FEDERAL 5-6D-64	6	060S	040W	4301350269	17652	Federal	OW	P	
FEDERAL 8-6D-64	6	060S	040W	4301350325	17664	Federal	OW	P	
FEDERAL 10-1D-65	1	060S	050W	4301350326	18027	Federal	OW	P	
FEDERAL 11-1D-65	1	060S	050W	4301350327	18039	Federal	OW	P	
FEDERAL 12-1D-65	1	060S	050W	4301350328	18040	Federal	OW	P	
FEDERAL 13-1D-65	1	060S	050W	4301350329	18042	Federal	OW	P	
FEDERAL 14-1D-65	1	060S	050W	4301350330	18041	Federal	OW	P	
FEDERAL 13-5D-64	5	060S	040W	4301350337	17714	Federal	OW	P	
FEDERAL 14-5D-64	5	060S	040W	4301350338	17715	Federal	OW	P	
FEDERAL 9-1D-65	1	060S	050W	4301350342	18026	Federal	OW	P	
FEDERAL 13-6D-64	6	060S	040W	4301350347	17619	Federal	OW	P	
FEDERAL 11-5D-64	5	060S	040W	4301350348	17690	Federal	OW	P	
FEDERAL 12-5D-64	5	060S	040W	4301350349	17713	Federal	OW	P	
FEDERAL 8-1D-65	1	060S	050W	4301350350	18025	Federal	OW	P	
UTE TRIBAL 3-14D-54	14	050S	040W	4301350389	17904	Indian	OW	P	
UTE TRIBAL 1-34D-55	34	050S	050W	4301350408	17931	Indian	OW	P	
UTE TRIBAL 7-14-54	14	050S	040W	4301350409	17924	Indian	OW	P	
UTE TRIBAL 8-21D-55	21	050S	050W	4301350435	17963	Indian	OW	P	
UTE TRIBAL 8-34D-55	34	050S	050W	4301350436	17952	Indian	OW	P	
UTE TRIBAL 5-16D-54	16	050S	040W	4301350475	17991	Indian	OW	P	
UTE TRIBAL 12-14D-55	14	050S	050W	4301350476	17973	Indian	OW	P	
UTE TRIBAL 8-15D-55	15	050S	050W	4301350477	17974	Indian	OW	P	
UTE TRIBAL 3-14-55	14	050S	050W	4301350478	18002	Indian	OW	P	
UTE TRIBAL 5-14-55	14	050S	050W	4301350479	18021	Indian	OW	P	
UTE TRIBAL 8-10D-54	10	050S	040W	4301350488	18099	Indian	OW	P	
UTE TRIBAL 7-34-55	34	050S	050W	4301350510	17949	Indian	OW	P	
FEDERAL 4-4D-65	4	060S	050W	4301350521	18557	Federal	OW	P	
FEDERAL 6-3D-64	3	060S	040W	4301350522	18073	Federal	OW	P	
FEDERAL 1-1D-64	1	060S	040W	4301350524	18088	Federal	OW	P	
FEDERAL 7-2D-65	2	060S	050W	4301350525	18100	Federal	OW	P	
BERRY TRIBAL 12-34D-54	34	050S	040W	4301350527	17998	Indian	OW	P	
FEDERAL 15-5D-65	5	060S	050W	4301350553	18537	Federal	OW	P	
FEDERAL 11-4D-64	4	060S	040W	4301350565	18043	Federal	OW	P	
FEDERAL 6-6D-65	6	060S	050W	4301350566	18521	Federal	OW	P	
LC TRIBAL 3-15D-56	15	050S	060W	4301350598	18097	Indian	OW	P	
LC TRIBAL 8-16D-56	16	050S	060W	4301350599	18161	Indian	OW	P	
LC FEE 16-16D-56	16	050S	060W	4301350601	18165	Fee	OW	P	
LC TRIBAL 10-16D-56	16	050S	060W	4301350602	18586	Indian	OW	P	
LC TRIBAL 15-22D-56	22	050S	060W	4301350606	18278	Indian	OW	P	
LC TRIBAL 5-23D-56	23	050S	060W	4301350625	18285	Indian	OW	P	
LC TRIBAL 5-14D-56	14	050S	060W	4301350661	18219	Indian	OW	P	
SFW FEE 14-10D-54	10	050S	040W	4301350686	18070	Fee	OW	P	
LC FEE 1-22D-56	22	050S	060W	4301350718	18101	Fee	OW	P	
FEDERAL 8-2D-65	2	060S	050W	4301350719	18614	Federal	OW	P	
FEDERAL 1-2D-64	2	060S	040W	4301350730	18585	Federal	OW	P	
FEDERAL 7-2D-64	2	060S	040W	4301350734	18584	Federal	OW	P	
FEDERAL 10-6D-64	6	060S	040W	4301350735	18162	Federal	OW	P	
FEDERAL 4-3D-64	3	060S	040W	4301350736	18621	Federal	OW	P	
FEDERAL 12-3D-64	3	060S	040W	4301350737	18620	Federal	OW	P	
LC TRIBAL 3-21D-56	21	050S	060W	4301350751	18462	Indian	OW	P	
LC TRIBAL 5-21D-56	21	050S	060W	4301350752	18286	Indian	OW	P	
FEDERAL 2-1D-65	1	060S	050W	4301350759	18172	Federal	OW	P	
FEDERAL 3-1D-65	1	060S	050W	4301350760	18173	Federal	OW	P	

FEDERAL 5-1D-65	1	060S	050W	4301350761	18174	Federal	OW	P	
FEDERAL 9-2D-65	2	060S	050W	4301350762	18245	Federal	OW	P	
FEDERAL 11-2D-65	2	060S	050W	4301350763	18589	Federal	OW	P	
FEDERAL 15-2D-65	2	060S	050W	4301350764	18590	Federal	OW	P	
LC TRIBAL 14-14D-56	14	050S	060W	4301350776	18287	Indian	OW	P	
LC FEE 2-20D-56	20	050S	060W	4301350777	18622	Fee	OW	P	
LC TRIBAL 12-22D-56	22	050S	060W	4301350780	18341	Indian	OW	P	
FEDERAL 3-4D-65	4	060S	050W	4301350782	18556	Federal	OW	P	
FEDERAL 6-4D-65	4	060S	050W	4301350783	19162	Federal	OW	P	
FEDERAL 12-4D-65	4	060S	050W	4301350784	19171	Federal	OW	P	
LC TRIBAL 14-15D-56	15	050S	060W	4301350834	18362	Indian	OW	P	
UTE TRIBAL 7I-21D-54	21	050S	040W	4301350852	18423	Indian	OW	P	BERRY PILOT EOR 246-02
UTE TRIBAL 8L-21D-54	21	050S	040W	4301350853	18423	Indian	OW	P	BERRY PILOT EOR 246-02
UTE TRIBAL 10S-21D-54	21	050S	040W	4301350854	18423	Indian	OW	P	BERRY PILOT EOR 246-02
UTE TRIBAL 11-11-54	11	050S	040W	4301350861	18775	Indian	OW	P	
LC TRIBAL 2-28D-56	28	050S	060W	4301350866	18592	Indian	OW	P	
LC FEE 8-28D-56	28	050S	060W	4301350867	18342	Fee	OW	P	
LC TRIBAL 6-27D-56	27	050S	060W	4301350868	18480	Indian	OW	P	
LC FEE 15-23D-56	23	050S	060W	4301350870	18410	Fee	OW	P	
LC TRIBAL 15-26-56	26	050S	060W	4301350871	18377	Indian	OW	P	
UTE TRIBAL 16-11-55	11	050S	050W	4301350888	18707	Indian	OW	P	
LC TRIBAL 2-5D-56	5	050S	060W	4301350925	18568	Indian	OW	P	
LC TRIBAL 2-9D-56	9	050S	060W	4301350926	18425	Indian	OW	P	
LC FEE 8-29-45	29	040S	050W	4301350928	18313	Fee	OW	P	
LC FEE 13-29-45	29	040S	050W	4301350929	18426	Fee	OW	P	
LC FEE 9-12D-57	12	050S	070W	4301350963	18541	Fee	OW	P	
LC FEE 1-22-57	22	050S	070W	4301350965	18558	Fee	OW	P	
LC TRIBAL 11-3D-56	3	050S	060W	4301350966	18464	Indian	OW	P	
LC TRIBAL 3-34-45	34	040S	050W	4301350976	18661	Indian	OW	P	
LC TRIBAL 9-10D-56	10	050S	060W	4301350987	18944	Indian	OW	P	
LC TRIBAL 10-9D-56	9	050S	060W	4301350990	18864	Indian	OW	P	
LC FEE 10-31D-45	31	040S	050W	4301350994	18443	Fee	OW	P	
VIEIRA TRIBAL 4-4-54	4	050S	040W	4301350997	18747	Indian	OW	P	
LC TRIBAL 10-21-56	21	050S	060W	4301350999	18439	Indian	OW	P	
FEDERAL 1-5D-64	5	060S	040W	4301351012	18720	Federal	OW	P	
FEDERAL 2-5D-64	5	060S	040W	4301351013	18723	Federal	OW	P	
FEDERAL 7-5D-64	5	060S	040W	4301351014	18722	Federal	OW	P	
FEDERAL 8-5D-64	5	060S	040W	4301351015	18721	Federal	OW	P	
MYRIN TRIBAL 15-10-55	10	050S	050W	4301351024	18771	Indian	OW	P	
LC TRIBAL 15-15D-56	15	050S	060W	4301351030	18440	Indian	OW	P	
LC TRIBAL 9-15D-56	15	050S	060W	4301351031	18441	Indian	OW	P	
LC TRIBAL 6-28-45	28	040S	050W	4301351034	18700	Indian	OW	P	
FEDERAL 1-12D-65	12	060S	050W	4301351055	18739	Federal	OW	P	
FEDERAL 8-12D-65	12	060S	050W	4301351056	18718	Federal	OW	P	
FEDERAL 2-12D-65	12	060S	050W	4301351057	18738	Federal	OW	P	
LC TRIBAL 15-8D-56	8	050S	060W	4301351060	18862	Indian	OW	P	
LC TRIBAL 8-22D-56	22	050S	060W	4301351069	19233	Indian	OW	P	
LC TRIBAL 9-17D-56	17	050S	060W	4301351070	18945	Indian	OW	P	
LC TRIBAL 7-27-45	27	040S	050W	4301351073	18685	Indian	OW	P	
LC TRIBAL 11-24-45	24	040S	050W	4301351076	18745	Indian	OW	P	
FEDERAL 3-12D-65	12	060S	050W	4301351093	18705	Federal	OW	P	
FEDERAL 4-12D-65	12	060S	050W	4301351094	18704	Federal	OW	P	
FEDERAL 5-12D-65	12	060S	050W	4301351095	18702	Federal	OW	P	
FEDERAL 6-12D-65	12	060S	050W	4301351096	18703	Federal	OW	P	
LC TRIBAL 9-8D-56	8	050S	060W	4301351112	18522	Indian	OW	P	
UTE TRIBAL 4-9-54	9	050S	040W	4301351126	19059	Indian	OW	P	
UTE TRIBAL 6-9-54	9	050S	040W	4301351127	19017	Indian	OW	P	
UTE TRIBAL 2-9-54	9	050S	040W	4301351128	18946	Indian	OW	P	
UTE TRIBAL 1-10-54	10	050S	040W	4301351129	18879	Indian	OW	P	
LC TRIBAL 8-30D-56	30	050S	060W	4301351131	18539	Indian	OW	P	
LC TRIBAL 16-30D-56	30	050S	060W	4301351132	18540	Indian	OW	P	
FEDERAL 1-1D-65	1	060S	050W	4301351142	18623	Federal	OW	P	
UTE TRIBAL 8-9-54	9	050S	040W	4301351143	18947	Indian	OW	P	
FEDERAL 15-1D-65	1	060S	050W	4301351175	18654	Federal	OW	P	
FEDERAL 16-1D-65	1	060S	050W	4301351176	18655	Federal	OW	P	
LC TRIBAL 11-29D-56	29	050S	060W	4301351183	18873	Indian	OW	P	

STATE TRIBAL 8-12-55	12	050S	050W	4301351188	18986	Indian	OW	P	
LC TRIBAL 11-20D-56	20	050S	060W	4301351189	18819	Indian	OW	P	
LC FEE 5-20D-56	20	050S	060W	4301351190	18818	Fee	OW	P	
LC FEE 9-19-56	19	050S	060W	4301351192	18596	Fee	OW	P	
LC TRIBAL 9-9D-56	9	050S	060W	4301351198	18595	Indian	OW	P	
FEDERAL 16-6-64	6	060S	040W	4301351217	18792	Federal	OW	P	
FEDERAL 9-6D-64	6	060S	040W	4301351218	18791	Federal	OW	P	
UTE TRIBAL 5-17-55	17	050S	050W	4301351220	18841	Indian	OW	P	
UTE TRIBAL 16-3-54	3	050S	040W	4301351226	18664	Indian	OW	P	
STATE TRIBAL 15-6-54	6	050S	040W	4301351227	18746	Indian	OW	P	
STATE TRIBAL 8-7-54	7	050S	040W	4301351228	18743	Indian	OW	P	
STATE TRIBAL 12-1-55	1	050S	050W	4301351229	18741	Indian	OW	P	
STATE TRIBAL 11-2-55	2	050S	050W	4301351230	18742	Indian	OW	P	
FEDERAL 1-11-65	11	060S	050W	4301351231	18689	Federal	OW	P	
FEDERAL 8-11D-65	11	060S	050W	4301351232	18688	Federal	OW	P	
FEDERAL 2-11D-65	11	060S	050W	4301351233	18690	Federal	OW	P	
STATE TRIBAL 12-3-55	3	050S	050W	4301351236	18744	Indian	OW	P	
UTE TRIBAL 11-4-55	4	050S	050W	4301351237	18663	Indian	OW	P	
UTE TRIBAL 4-9-55	9	050S	050W	4301351238	18796	Indian	OW	P	
UTE TRIBAL 15-5-55	5	050S	050W	4301351239	18740	Indian	OW	P	
UTE FEE 9-9-54	9	050S	040W	4301351259	18642	Fee	OW	P	
LC TRIBAL 4-29-45	29	040S	050W	4301351260	18719	Indian	OW	P	
UTE FEE 14-9D-54	9	050S	040W	4301351271	18684	Fee	OW	P	
UTE FEE 15-9D-54	9	050S	040W	4301351272	18687	Fee	OW	P	
LC FEE 10-28D-56	28	050S	060W	4301351288	18591	Fee	OW	P	
UTE TRIBAL 8-16D-54	16	050S	040W	4301351295	19003	Indian	OW	P	
FEE TRIBAL 4-5-54	5	050S	040W	4301351303	19187	Indian	OW	P	
LC TRIBAL 1-26-56	26	050S	060W	4301351306	18816	Indian	OW	P	
UTE TRIBAL 6-16D-54	16	050S	040W	4301351307	19060	Indian	OW	P	
LC TRIBAL 7-22D-56	22	050S	060W	4301351308	18795	Indian	OW	P	
LC TRIBAL 9-22D-56	22	050S	060W	4301351309	18794	Indian	OW	P	
LC TRIBAL 9-32D-56	32	050S	060W	4301351316	19228	Indian	OW	P	
LC TRIBAL 7-26D-56	26	050S	060W	4301351319	18817	Indian	OW	P	
LC FEE 8-6D-56	6	050S	060W	4301351342	18657	Fee	OW	P	
LC FEE 10-29D-45	29	040S	050W	4301351343	18850	Fee	OW	P	
LC TRIBAL 1-7D-56	7	050S	060W	4301351344	18774	Indian	OW	P	
LC TRIBAL 9-7D-56	7	050S	060W	4301351346	18773	Indian	OW	P	
LC TRIBAL 11-10D-56	10	050S	060W	4301351369	18840	Indian	OW	P	
LC FEE 1-31D-45	31	040S	050W	4301351371	18686	Fee	OW	P	
LC TRIBAL 14-21D-56	21	050S	060W	4301351384	18877	Indian	OW	P	
LC TRIBAL 4-22D-56	22	050S	060W	4301351385	18878	Indian	OW	P	
LC TRIBAL 8-21D-56	21	050S	060W	4301351392	18874	Indian	OW	P	
UTE TRIBAL 1-17-55	17	050S	050W	4301351393	18848	Indian	OW	P	
LC TRIBAL 4-33D-45	33	040S	050W	4301351401	18853	Indian	OW	P	
LC TRIBAL 16-21D-56	21	050S	060W	4301351407	18875	Indian	OW	P	
UTE TRIBAL 2-10D-54	10	050S	040W	4301351411	19172	Indian	OW	P	
UTE TRIBAL 4-10D-54	10	050S	040W	4301351414	19069	Indian	OW	P	
LC TRIBAL 2-21D-56	16	050S	060W	4301351418	19252	Indian	OW	P	
LC TRIBAL 1-23D-45	23	040S	050W	4301351425	18855	Indian	OW	P	
LC TRIBAL 2-28D-45	28	040S	050W	4301351429	18701	Indian	OW	P	
LC TRIBAL 9-28D-45	28	040S	050W	4301351430	18656	Indian	OW	P	
LC TRIBAL 1-29-56	29	050S	060W	4301351442	18876	Indian	OW	P	
LC FEE 1-1-56	1	050S	060W	4301351458	18829	Fee	OW	P	
LC Tribal 12-32-45	32	040S	050W	4301351465	18772	Indian	OW	P	
UTE TRIBAL 2-5-54	5	050S	040W	4301351520	18880	Indian	OW	P	
LC Tribal 3-32D-45	32	040S	050W	4301351561	18842	Indian	OW	P	
LC TRIBAL 5-15D-56	15	050S	060W	4301351562	19253	Indian	OW	P	
LC FEE 16-36-56	36	050S	060W	4301351611	19096	Fee	OW	P	
LC TRIBAL 15-34-56	34	050S	060W	4301351647	18962	Indian	OW	P	
LC TRIBAL 1-34D-56	34	050S	060W	4301351660	18988	Indian	OW	P	
LC FEE 13-23-56	23	050S	060W	4301351706	18994	Fee	OW	P	
LC FEE 11-23D-56	23	050S	060W	4301351707	18995	Fee	OW	P	
LC TRIBAL 3-33-56	33	050S	060W	4301351711	19242	Indian	OW	P	
LC FEE 11-29D-45	29	040S	050W	4301351743	19188	Fee	OW	P	
LC FEE 4-28D-45	29	040S	050W	4301351745	18849	Fee	OW	P	
CC Fee 7R-28-38	28	030S	080W	4301351852	18863	Fee	OW	P	

FEDERAL 6-7-64	7	060S	040W	4301351915	19117	Federal	OW	P	
FEDERAL 3-7D-64	7	060S	040W	4301351916	19115	Federal	OW	P	
FEDERAL 4-7D-64	7	060S	040W	4301351917	19110	Federal	OW	P	
FEDERAL 5-7D-64	7	060S	040W	4301351918	19111	Federal	OW	P	
FEDERAL 2-7-64	7	060S	040W	4301351919	19139	Federal	OW	P	
FEDERAL 1-7D-64	7	060S	040W	4301351920	19140	Federal	OW	P	
FEDERAL 12-7D-64	7	060S	040W	4301351924	19025	Federal	OW	P	
FEDERAL 11-7D-64	7	060S	040W	4301351925	19039	Federal	OW	P	
FEDERAL 13-7D-64	7	060S	040W	4301351926	19026	Federal	OW	P	
FEDERAL 14-7D-64	7	060S	040W	4301351927	19040	Federal	OW	P	
FEDERAL 7-7D-64	7	060S	040W	4301351933	19141	Federal	OW	P	
FEDERAL 8-7D-64	7	060S	040W	4301351934	19142	Federal	OW	P	
FEDERAL 9-7D-64	7	060S	040W	4301351935	19143	Federal	OW	P	
FEDERAL 10-7D-64	7	060S	040W	4301351936	19144	Federal	OW	P	
ABBOTT FEE 2-6D-54	6	050S	040W	4301351949	18974	Fee	OW	P	
ABBOTT FEE 8-6D-54	6	050S	040W	4301351950	18964	Fee	OW	P	
ABBOTT FEE 4-6-54	6	050S	040W	4301351952	18965	Fee	OW	P	
Federal 15-12D-65	12	060S	050W	4301351992	19051	Federal	OW	P	
Federal 10-12D-65	12	060S	050W	4301351999	19052	Federal	OW	P	
Federal 9-12D-65	12	060S	050W	4301352000	19053	Federal	OW	P	
Federal 16-12D-65	12	060S	050W	4301352003	19054	Federal	OW	P	
Federal 1-6D-65	6	060S	050W	4301352012	19189	Federal	OW	P	
Federal 3-6D-65	6	060S	050W	4301352014	19190	Federal	OW	P	
Federal 2-6-65	6	060S	050W	4301352017	19191	Federal	OW	P	
Federal 7-6D-65	6	060S	050W	4301352018	19192	Federal	OW	P	
Federal 16-11D-65	11	060S	050W	4301352045	19070	Federal	OW	P	
Federal 15-11D-65	11	060S	050W	4301352046	19076	Federal	OW	P	
Federal 10-11D-65	11	060S	050W	4301352047	19077	Federal	OW	P	
Federal 9-11D-65	11	060S	050W	4301352048	19071	Federal	OW	P	
Federal 11-12D-65	12	060S	050W	4301352049	19121	Federal	OW	P	
Federal 12-12D-65	12	060S	050W	4301352050	19122	Federal	OW	P	
Federal 13-12D-65	12	060S	050W	4301352052	19123	Federal	OW	P	
Federal 14-12D-65	12	060S	050W	4301352053	19124	Federal	OW	P	
LC Tribal 12-28D-45	28	040S	050W	4301352089	19378	Indian	OW	P	
LC Tribal 2-32D-45	32	040S	050W	4301352113	19348	Indian	OW	P	
LC Tribal 16-29D-45	32	040S	050W	4301352114	19349	Indian	OW	P	
Vieira Tribal 3-4D-54	4	050S	040W	4301352145	19210	Indian	OW	P	
Vieira Tribal 5-4D-54	4	050S	040W	4301352146	19193	Indian	OW	P	
Vieira Tribal 6-4D-54	4	050S	040W	4301352147	19216	Indian	OW	P	
Lamplugh Tribal 6-3D-54	3	050S	040W	4301352148	19289	Indian	OW	P	
Lamplugh Tribal 5-3D-54	3	050S	040W	4301352149	19290	Indian	GW	P	
Lamplugh Tribal 4-3D-54	3	050S	040W	4301352150	19291	Indian	OW	P	
Lamplugh Tribal 3-3D-54	3	050S	040W	4301352151	19292	Indian	OW	P	
UTE Tribal 6-35D-54	35	050S	040W	4301352158	19254	Indian	GW	P	
UTE Tribal 4-35D-54	35	050S	040W	4301352159	19255	Indian	GW	P	
Heiner Tribal 3-11D-54	11	050S	040W	4301352165	19194	Indian	OW	P	
Heiner Tribal 4-11-54	11	050S	040W	4301352166	19195	Indian	OW	P	
Heiner Tribal 5-11D-54	11	050S	040W	4301352167	19196	Indian	OW	P	
Conolly Tribal 1-11D-54	11	050S	040W	4301352168	19270	Indian	OW	P	
Conolly Tribal 2-11D-54	11	050S	040W	4301352169	19197	Indian	OW	P	
Conolly Tribal 7-11D-54	11	050S	040W	4301352170	19280	Indian	OW	P	
Conolly Tribal 8-11D-54	11	050S	040W	4301352171	19281	Indian	OW	P	
Casper Tribal 1-5D-54	5	050S	040W	4301352180	19198	Indian	OW	P	
Fee Tribal 6-5D-54	5	050S	040W	4301352181	19199	Indian	OW	P	
Fee Tribal 5-5D-54	5	050S	040W	4301352182	19200	Indian	OW	P	
Fee Tribal 3-5D-54	5	050S	040W	4301352184	19201	Indian	OW	P	
Casper Tribal 7-5D-54	5	050S	040W	4301352185	19202	Indian	OW	P	
UTE Tribal 10-35D-54	35	050S	040W	4301352198	19320	Indian	OW	P	
UTE Tribal 14-35D-54	35	050S	040W	4301352199	19311	Indian	GW	P	
UTE Tribal 12-35D-54	35	050S	040W	4301352200	19312	Indian	OW	P	
UTE Tribal 16-35D-54	35	050S	040W	4301352230	19321	Indian	OW	P	
Evans Tribal 1-3-54	3	050S	040W	4301352234	19264	Indian	OW	P	
Evans Tribal 2-3D-54	3	050S	040W	4301352235	19265	Indian	OW	P	
Evans Tribal 7-3D-54	3	050S	040W	4301352236	19256	Indian	OW	P	
Evans Tribal 8-3D-54	3	050S	040W	4301352237	19257	Indian	OW	P	
Ute Tribal 9-3D-54	3	050S	040W	4301352249	19236	Indian	OW	P	

Ute Tribal 15-3D-54	3	050S	040W	4301352250	19237	Indian	OW	P	
Ute Tribal 10-3-54	3	050S	040W	4301352251	19238	Indian	OW	P	
Ute Tribal 14-3D-54	3	050S	040W	4301352298	19258	Indian	OW	P	
Ute Tribal 12-3D-54	3	050S	040W	4301352299	19259	Indian	OW	P	
Ute Tribal 11-3D-54	3	050S	040W	4301352300	19260	Indian	OW	P	
Ute Tribal 16-4D-54	4	050S	040W	4301352302	19350	Indian	OW	P	
Ute Tribal 15-4D-54	4	050S	040W	4301352303	19293	Indian	OW	P	
Ute Tribal 9-4D-54	4	050S	040W	4301352305	19304	Indian	OW	P	
Ute Tribal 10-4D-54	4	050S	040W	4301352307	19294	Indian	OW	P	
UTE Tribal 2-35D-54	35	050S	040W	4301352319	19322	Indian	OW	P	
UTE Tribal 8-35D-54	35	050S	040W	4301352320	19323	Indian	OW	P	
Abbott Fee 5-6D-54	6	050S	040W	4301352326	19351	Fee	OW	P	
Ute Tribal 6-11D-54	11	050S	040W	4301352330	19243	Indian	OW	P	
Ute Tribal 12-11D-54	11	050S	040W	4301352331	19244	Indian	OW	P	
Ute Tribal 14-11D-54	11	050S	040W	4301352332	19245	Indian	OW	P	
Ute Tribal 11-4D-54	4	050S	040W	4301352343	19305	Indian	OW	P	
Ute Tribal 12-4D-54	4	050S	040W	4301352344	19352	Indian	OW	P	
Ute Tribal 13-4D-54	4	050S	040W	4301352345	19353	Indian	OW	P	
Ute Tribal 14-4D-54	4	050S	040W	4301352346	19306	Indian	OW	P	
Ute Tribal 16-5D-54	5	050S	040W	4301352545	99999	Indian	OW	P	
Ute Tribal 15-5D-54	5	050S	040W	4301352546	99999	Indian	OW	P	
Ute Tribal 10-5D-54	5	050S	040W	4301352547	99999	Indian	OW	P	
Ute Tribal 8-5D-54	5	050S	040W	4301352548	99999	Indian	OW	P	
SCOFIELD-THORPE 26-31	26	120S	070E	4300730987	15218	Fee	D	PA	
SCOFIELD-THORPE 26-43	26	120S	070E	4300730990	14922	Fee	D	PA	
SCOFIELD CHRISTIANSEN 8-23	8	120S	070E	4300730999	15172	Fee	D	PA	
CC FEE 7-28-38	28	030S	080W	4301350887	18288	Fee	D	PA	
CC FEE 8-9-37	9	030S	070W	4301350896	18660	Fee	D	PA	
ST LOST CREEK 32-44	32	110S	070E	4304930023	14450	State	D	PA	
SCOFIELD THORPE 22-41X RIG SKID	22	120S	070E	4300730890	13719	Fee	GW	S	
SCOFIELD-THORPE 35-13	35	120S	070E	4300730991	14846	Fee	GW	S	
SCOFIELD-THORPE 23-31	23	120S	070E	4300731001	14923	Fee	GW	S	
NUTTERS RIDGE FED 5-1	5	060S	040W	4301330403	8231	Federal	OW	S	
WIRE FENCE CYN FED 15-1	15	060S	050W	4301330404	8233	Federal	GW	S	
R FORK ANTELOPE CYN FED 25-1	25	060S	050W	4301330406	8234	Federal	OW	S	
WOLF HOLLOW 22-1	22	060S	050W	4301330425	10370	Federal	GW	S	
ANTELOPE RIDGE 24-1	24	060S	050W	4301330426	10371	Federal	OW	S	
B C UTE TRIBAL 8-21	21	050S	040W	4301330829	8414	Indian	OW	S	BERRY PILOT EOR 246-02
Z and T UTE TRIBAL 10-21	21	050S	040W	4301331283	11133	Indian	GW	S	BERRY PILOT EOR 246-02
Z and T UTE TRIBAL 12-22	22	050S	040W	4301331311	11421	Indian	OW	S	
UTE TRIBAL 15-17	17	050S	040W	4301331649	11956	Indian	OW	S	
UTE TRIBAL 7-30	30	050S	040W	4301332167	12945	Indian	OW	S	
UTE TRIBAL 8-35-55	35	050S	050W	4301332267	13571	Indian	OW	S	
UTE TRIBAL 10-16-55	16	050S	050W	4301332345	13693	Indian	OW	S	
FOY TRIBAL 11-34-55	34	050S	050W	4301332351	13648	Indian	OW	S	
UTE TRIBAL 13-30-54	30	050S	040W	4301332409	13968	Indian	OW	S	
UTE TRIBAL 3-33-54	33	050S	040W	4301332412	13938	Indian	OW	S	
UTE TRIBAL 1-20-55	20	050S	050W	4301332414	14548	Indian	OW	S	
UTE TRIBAL 11-30-54	30	050S	040W	4301332512	13982	Indian	OW	S	
UTE TRIBAL 2-24-54	24	050S	040W	4301332569	14314	Indian	OW	S	
UTE TRIBAL 10-14-55	14	050S	050W	4301332601	14331	Indian	OW	S	
MOON TRIBAL 3-27-54	27	050S	040W	4301332613	14416	Indian	OW	S	
UTE TRIBAL 7-21-54	21	050S	040W	4301332623	14383	Indian	OW	S	BERRY PILOT EOR 246-02
UTE TRIBAL 16-24-55	24	050S	050W	4301332672	14384	Indian	GW	S	
UTE TRIBAL 7-35-54	35	050S	040W	4301332774	15019	Indian	OW	S	
UTE TRIBAL 16-25-54	25	050S	040W	4301332779	15078	Indian	OW	S	
MOON TRIBAL 13-27-54	27	050S	040W	4301332801	15057	Indian	OW	S	
UTE TRIBAL 15-15-55	15	050S	050W	4301332855	15114	Indian	OW	S	
UTE TRIBAL 5-36-55	36	050S	050W	4301332930	15301	Indian	OW	S	
UTE TRIBAL 8-24-54	24	050S	040W	4301332933	15402	Indian	OW	S	
UTE TRIBAL 12-15-55	15	050S	050W	4301332981	15348	Indian	OW	S	
UTE TRIBAL 9-21-54	21	050S	040W	4301333040	15360	Indian	OW	S	BERRY PILOT EOR 246-02
UTE TRIBAL 15-21-54	21	050S	040W	4301333114	15441	Indian	OW	S	BERRY PILOT EOR 246-02
UTE TRIBAL 10-16-54	16	050S	040W	4301333129	15454	Indian	OW	S	
TAYLOR FEE 7-14-56	14	050S	060W	4301333140	15601	Fee	OW	S	
UTE TRIBAL 9S-25-55	25	050S	050W	4301333245	15962	Indian	OW	S	

UTE TRIBAL 9-5-54	5	050S	040W	4301351111	18909	Indian	OW	S	
ABBOTT FEE 6-6-54	6	050S	040W	4301351948	18963	Fee	OW	S	