FORM 3160-3
(December 1990)

SUBMIT IN TRIPLICATE*
(Other instructions on reverse side)

Form approved.
Budget Bureau No. 1004-0136
Expires December 31, 1991

UNITED STATES
DEPARTMENT OF THE INTERIOR
BUREAU OF LAND MANAGEMENT

5. LEASE DESIGNATION AND SERIAL NO.
U-30096

APPLICATION FOR PERMIT TO DRILL, DEEPEN, OR PLUG BACK

6. IF INDIAN, ALOTTEE OR TRIBE NAME
N/A

1a. TYPE OF WORK DRILL [X] DEEPEN [ ]

1b. TYPE OF WELL
OIL WELL [X] GAS WELL [ ] OTHER [ ] SINGLE ZONE [ ] MULTIPLE ZONE [ ]

7. UNIT AGREEMENT NAME
WELLS DRAW UNIT

8. FARM OR LEASE NAME
WELLS DRAW UNIT

2. NAME OF OPERATOR
Inland Production Company

9. WELL NO.
WELLS DRAW 8-5-9-16

3. ADDRESS OF OPERATOR
410 - 17th Street, Suite 700, Denver, CO 80202 Phone: (303) 893-0102

10. FIELD AND POOL OR WILDCAT
MONUMENT BUTTE

4. LOCATION OF WELL (Report location clearly and in accordance with any State requirements.*)
At Surface SENE 4434809 N 573749 E
At proposed Prod. Zone
587.7' FEL & 1809.4' FNL

11. SEC., T., R., M., OR BLK. AND SURVEY OR AREA
Sec. 5, T9S, R16E

14. DISTANCE IN MILES AND DIRECTION FROM NEAREST TOWN OR POST OFFICE*
Approximately 13.2 miles SW of Myton, Utah

12. County Duchesne
13. STATE UT

15. DISTANCE FROM PROPOSED* LOCATION TO NEAREST PROPERTY OR LEASE LINE, FT.(Also to nearest drlg. unit line, if any)	16. NO. OF ACRES IN LEASE	17. NO. OF ACRES ASSIGNED TO THIS WELL
588	602	40
18. DISTANCE FROM PROPOSED LOCATION* TO NEAREST WELL, DRILLING, COMPLETED, OR APPLIED FOR ON THIS LEASE, FT.	**19. PROPOSED DEPTH**	**20. ROTARY OR CABLE TOOLS**
	6500'	Rotary

21. ELEVATIONS (Show whether DF, RT, GR, etc.)
5776.1 GR

22. APPROX. DATE WORK WILL START*
1st Quarter 2000

23. PROPOSED CASING AND CEMENTING PROGRAM

SIZE OF HOLE	SIZE OF CASING	WEIGHT/FOOT	SETTING DEPTH	QUANTITY OF CEMENT
Refer to Monument Butte Field SOP's Drilling Program/Casing Design				

Inland Production Company proposes to drill this well in accordance with the attached exhibits.

The Conditions of Approval are also attached.

RECEIVED
DEC 20 1999

IN ABOVE SPACE DESCRIBE PROPOSED PROGRAM : If proposal is to deepen or plug back, give data on present productive zone and proposed new productive zone. If proposal is to drill or deepen directionally, give pertinent data on subsurface locations and measured and true vertical depths. Give blowout preventer program, if any.

24.
SIGNED Anita Shipman for Jon Holst TITLE Operations Sec'y DATE 12/17/99
Anita Shipman for Jon Holst, Counsel

(This space for Federal or State office use)

PERMIT NO. 43-013-32132 APPROVAL DATE

Application approval does not warrant or certify that the applicant holds legal or equitable title to those rights in the subject lease which would entitle the applicant to conduct operations thereon.

CONDITIONS OF APPROVAL, IF ANY:

APPROVED BY Bradley G. Hill TITLE BRADLEY G. HILL RECLAMATION SPECIALIST III DATE 1/10/00

Federal Approval of this Action is Necessary

*See Instructions On Reverse Side

Title 18 U.S.C. Section 1001, makes it a crime for any person knowingly and willfully to make to any department or agency of the United States any false, fictitious or fraudulent statements or representations as to any matter within its jurisdiction.

T9S, R16E, S.L.B.&M.

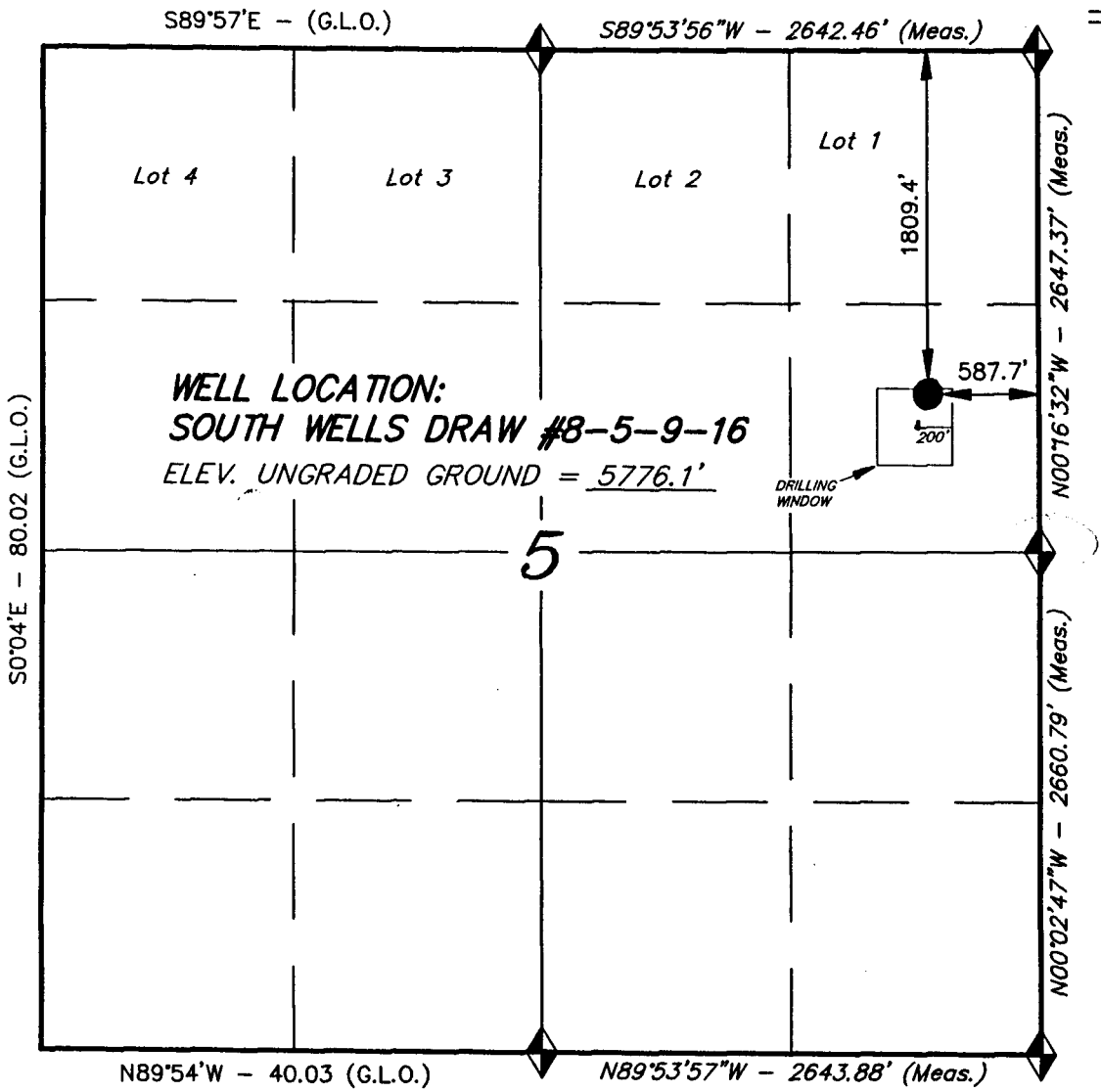

◆ = SECTION CORNERS LOCATED

BASIS OF ELEV; U.S.G.S. 7-1/2 min QUAD (MYTON SE)

BASIS OF BEARINGS IS A GLOBAL POSITIONING SATELITE OBSERVATION

INLAND PRODUCTION COMPANY

WELL LOCATION, SOUTH WELLS DRAW #8-5-9-16, LOCATED AS SHOWN IN THE SE 1/4 NE 1/4 OF SECTION 5, T9S, R16E, S.L.B.&M. DUCHESNE COUNTY, UTAH.

N

THIS IS TO CERTIFY THAT THE ABOVE PLAT WAS PREPARED FROM FIELD NOTES OF ACTUAL SURVEYS MADE BY ME OR UNDER MY SUPERVISION AND THAT THE SAME ARE TRUE AND CORRECT TO THE BEST OF MY KNOWLEDGE AND BELIEF.

GENE STEWART

REGISTERED LAND SURVEYOR
REGISTRATION No. 144102
STATE OF UTAH

STATE OF UTAH

TRI STATE LAND SURVEYING & CONSULTING
38 WEST 100 NORTH – VERNAL, UTAH 84078
(801) 781-2501

SCALE: 1" = 1000'	SURVEYED BY: G.S. D.S.
DATE: 11-22-98	WEATHER: COOL
REVISIONS:	FILE #

RECEIVED
DEC 20 1999
DIVISION OF OIL, GAS & MINING

Inland
RESOURCES INC.

December 17, 1999

United States Department of Interior
Bureau of Land Management
Vernal District Office
ATTN: Margie Herrmann
170 South 500 East
Vernal, Utah 84078-2799

RE: Wells Draw 8-5-9-16
SENE Section 5, T9S, R16E
Duchesne, Utah

Dear Ms. Herrmann:

Enclosed please find the Application for Permit to Drill the Wells Draw 8-5-9-16 well, submitted in triplicate, for your review and approval.

If you have any questions or require any additional information, please contact me or Jon Holst at (303) 893-0102.

Sincerely,

Anita L. Shipman
Operations Secretary

Enc: Form 3160-3 (3 copies)

cc: State of Utah
Division of Oil, Gas & Mining
ATTN: Lisha Cordova
1594 West North Temple – Suite 1210
P. O. Box 145801
Salt Lake City, Utah 84114-5801

410 Seventeenth Street, Suite 700, Denver, CO 80202 • 303-893-0102 • FAX 303-893-0103

INLAND PRODUCTION COMPANY
WELLS DRAW 8-5-9-16
SENE SECTION 5, T9S, R16E
DUCHESNE COUNTY, UTAH

ONSHORE ORDER NO. 1

DRILLING PROGRAM

1. **GEOLOGIC SURFACE FORMATION:**

Uinta formation of Upper Eocene Age

2. **ESTIMATED TOPS OF IMPORTANT GEOLOGIC MARKERS:**

Uinta	0 – 1300'
Green River	1300
Wasatch	6500'

3. **ESTIMATED DEPTHS OF ANTICIPATED WATER, OIL, GAS OR MINERALS:**

Green River Formation 1300' – 6500' – Oil

4. **PROPOSED CASING PROGRAM:**

Please refer to the Monument Butte Field SOP.

5. **MINIMUM SPECIFICATIONS FOR PRESSURE CONTROL:**

Please refer to the Monument Butte Field SOP. See Exhibit "F".

6. **TYPE AND CHARACTERISTICS OF THE PROPOSED CIRCULATION MUDS:**

Please refer to the Monument Butte Field SOP.

7. **AUXILIARY SAFETY EQUIPMENT TO BE USED:**

Please refer to the Monument Butte Field SOP.

8. **TESTING, LOGGING AND CORING PROGRAMS:**

Please refer to the Monument Butte Field SOP.

9. **ANTICIPATED ABNORMAL PRESSURE OR TEMPERATURE:**

The anticipated maximum bottom hole pressure is 2000 psi. It is not anticipated that abnormal temperatures will be encountered; nor that any other abnormal hazards such as H2S will be encountered in this area.

10. **ANTICIPATED STARTING DATE AND DURATION OF THE OPERATIONS:**

Please refer to the Monument Butte Field SOP.

INLAND PRODUCTION COMPANY
WELLS DRAW 8-5-9-16
SENE SECTION 5, T9S, R16E
DUCHESNE COUNTY, UTAH

ONSHORE ORDER NO. 1

MULTI-POINT SURFACE USE & OPERATIONS PLAN

1. **EXISTING ROADS**

See attached Topographic Map "A"

To reach Inland Production Company well location site Wells Draw 8-5-9-16 located in the SE ¼ NE ¼ of Section 5, T9S, R16E S. L. B. & M. Duchesne County, Utah:

Proceed in a westerly direction out of Myton, Utah along Highway 40 approximately 1.6 miles to the junction of this highway and Utah State Highway 53, proceed southerly along Utah State Highway 53 for approximately 1.6 miles to its junction with Sand Wash Road and proceed southerly for another approximately 4.75 miles, turn right on the dirt BLM Fenceline Road and proceed west approximately 3.79 miles to the beginning of the proposed access road.

2. **PLANNED ACCESS ROAD**

See Topographic Map "B" for the location of the proposed access road.

3. **LOCATION OF EXISTING WELLS**

Refer to Exhibit "D"

4. **LOCATION OF EXISTING AND/OR PROPOSED FACILITIES**

Please refer to the Monument Butte Field Standard Operating Procedure (SOP).

5. **LOCATION AND TYPE OF WATER SUPPLY**

Please refer to the Monument Butte Field SOP. See Exhibit "C".

6. **SOURCE OF CONSTRUCTION MATERIALS**

Please refer to the Monument Butte Field SOP.

7. **METHODS FOR HANDLING WASTE DISPOSAL**

Please refer to the Monument Butte Field SOP. See Exhibit "E".

8. ANCILLARY FACILITIES:

Please refer to the Monument Butte Field SOP.

9. WELL SITE LAYOUT:

The attached Location Layout Diagram describes drill pad cross-sections, cuts and fills and locations of the mud tanks, reserve pit, pipe racks, trailer parking, spoil dirt stockpile(s) and surface material stockpile(s). Refer to Exhibits "E" and "E-1".

10. PLANS FOR RESTORATION OF SURFACE:

Please refer to the Monument Butte Field SOP.

11. SURFACE OWNERSHIP: Bureau of Land Management

12. OTHER ADDITIONAL INFORMATION:

The Archaeological Cultural Resource Survey is attached.

Inland Production Company requests a 60' ROW for the Well Draw 8-5-9-16 to allow for construction of a 6" poly gas gathering line, and a 3" poly fuel gas line. Both lines will tie in to the existing pipeline infrastructure. **Refer to Topographic Map "C".**

13. LESSEE'S OR OPERATOR'S REPRENSENTATIVE AND CERTIFICATION:

Representative

Name:	Jon Holst
Address:	410 Seventeenth Street Suite 700 Denver, CO 80202
Telephone:	(303) 893-0102

Certification

Please be advised that INLAND RESOURCES, INC. is considered to be the operator of well #8-5-9-16. SENE Section 5, T9S, R16E, Lease #U-30096, Duchesne County, Utah, and is responsible under the terms and conditions of the lease for the operations conducted upon the leased lands. Bond coverage is provided by Hartford Accident #4488944.

I hereby certify that the proposed drill site and access route have been inspected, and I am familiar with the conditions which currently exist; that the statements made in this plan are true and correct to the best of my knowledge; and that the work associated with the operations proposed here will be performed by Inland Resources, Inc. and its contractors and subcontractors in conformity with this plan and the terms and conditions under which it is approved. This statement is subject to the provisions of the 18 U.S.C. 1001 for the filing of a false statement.

12-16-99
Date

Jon Holst
Counsel

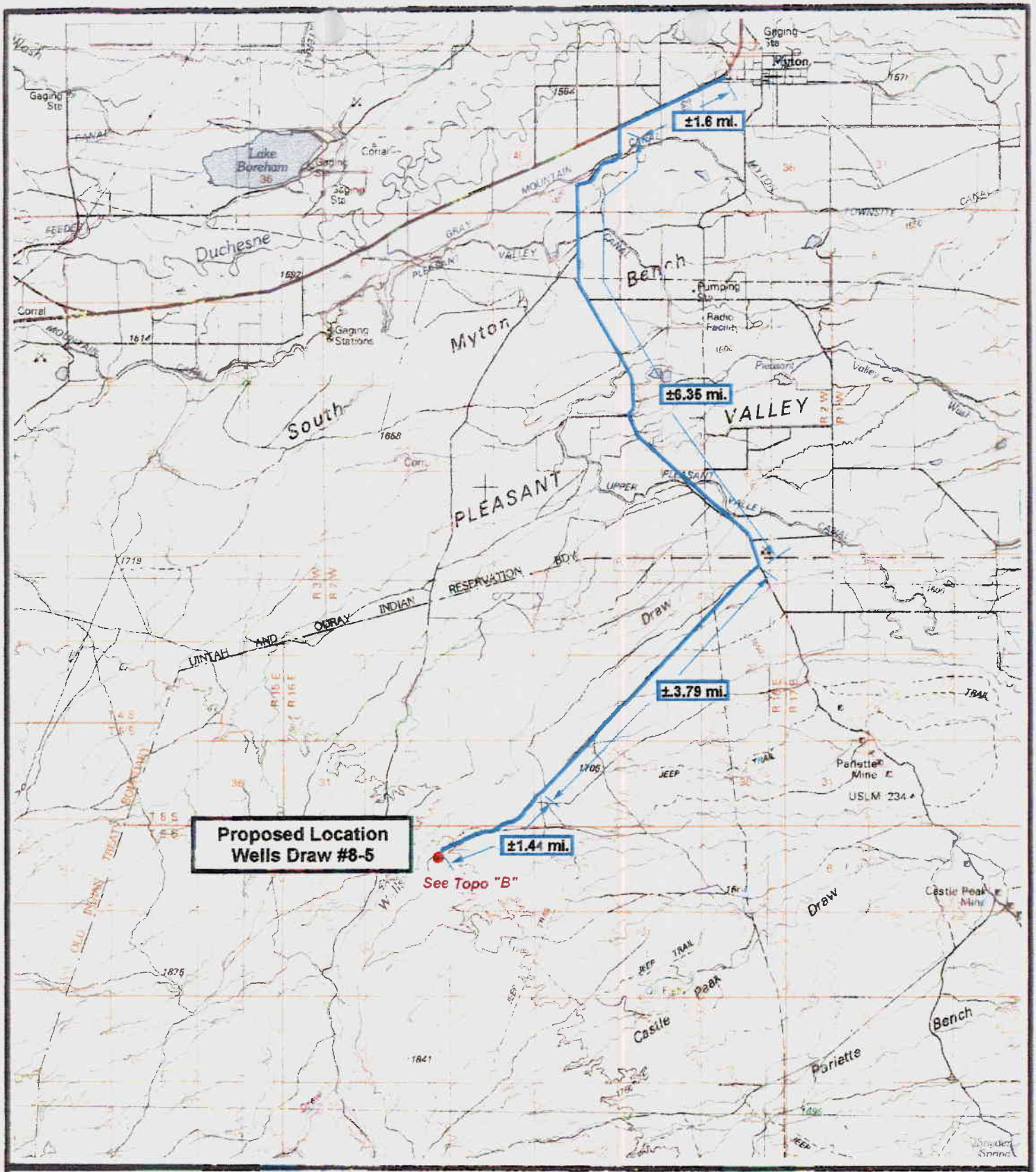

Inland RESOURCES INC.

WELLS DRAW #8-5
SEC. 5, T9S, R16E, S.L.B.&M.
TOPOGRAPHIC MAP "A"

N

Drawn By: ML	Revision:
Scale: 1 : 100,000	File: ILWD8-5A
Date: 11/9/98	

Tri-State Land Surveying Inc.
P.O. Box 533, Vernal, UT 84078
435-781-2501 Fax 434-781-2518

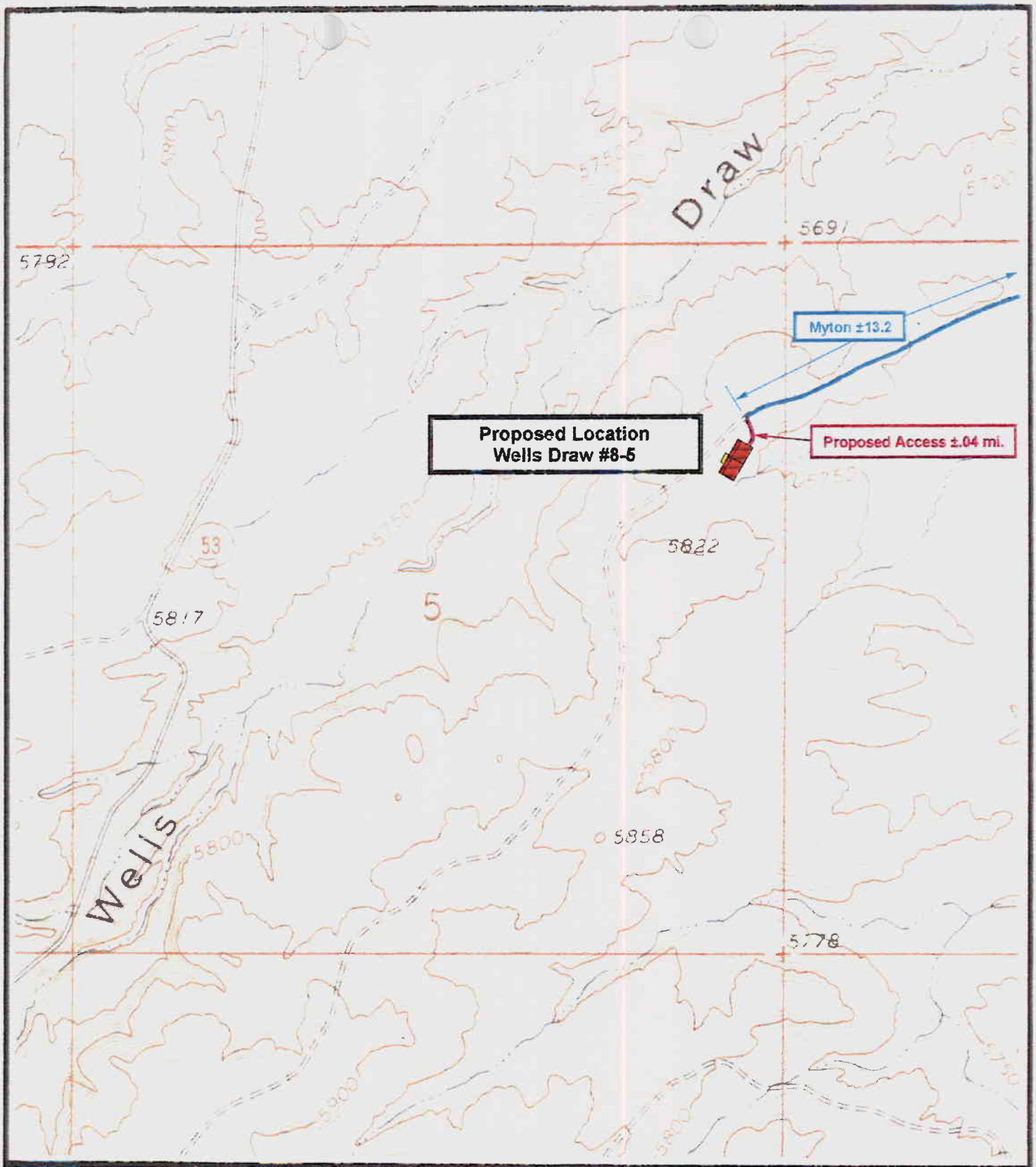

Inland
RESOURCES INC.

WELLS DRAW #8-5
SEC. 5, T9S, R16E, S.L.B.&M.
TOPOGRAPHIC MAP "B"

N

Drawn By: ML	Revision:
Scale: 1" = 1000'	File: ILWD8-5B
Date: 11/10/98	

Tri-State Land Surveying Inc.
P.O. Box 533, Vernal, UT 84078
435-781-2501 Fax 434-781-2518

WELLS DRAW 8-5-9-16 TOPOGRAPHIC MAP C

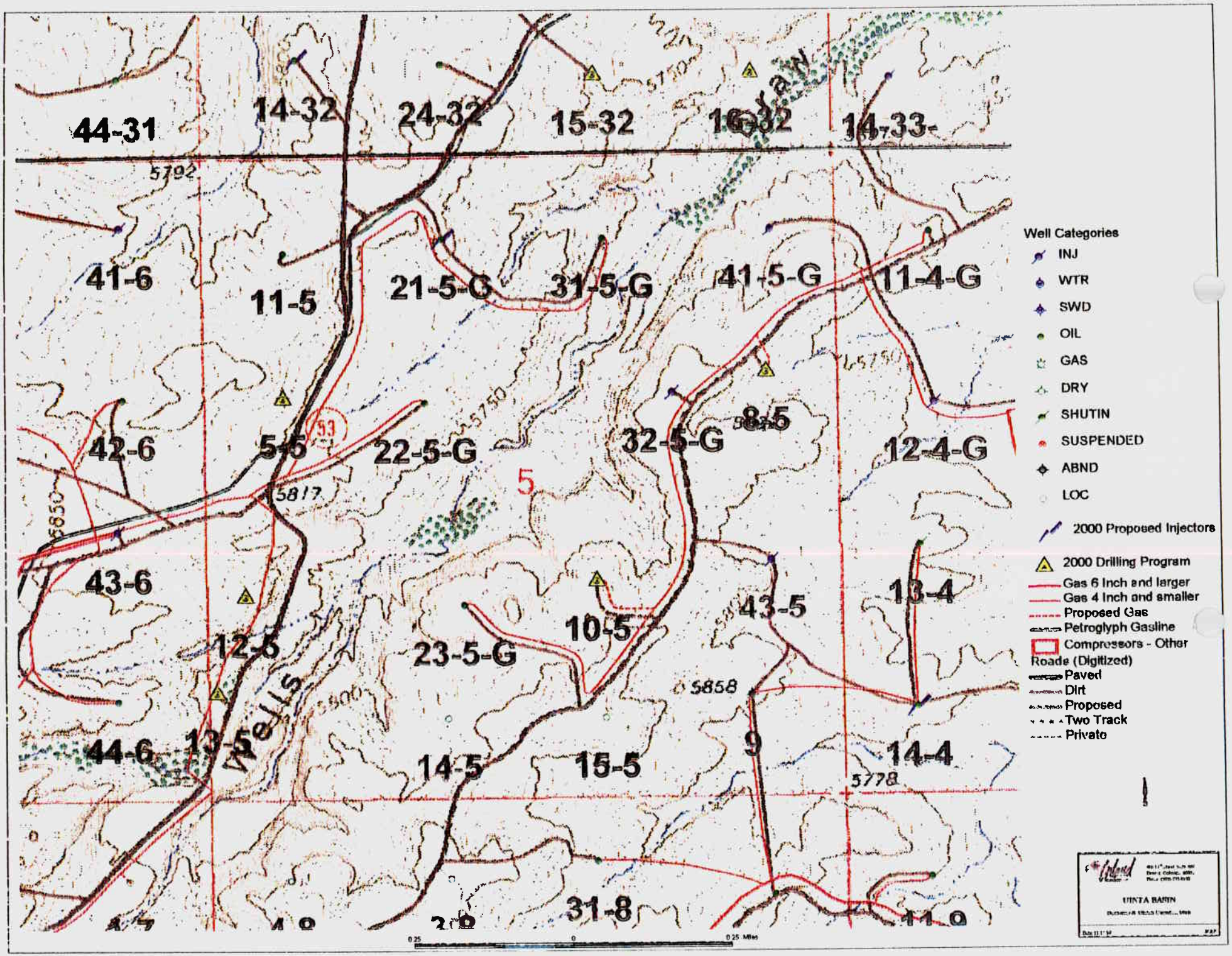

EXHIBIT "C"

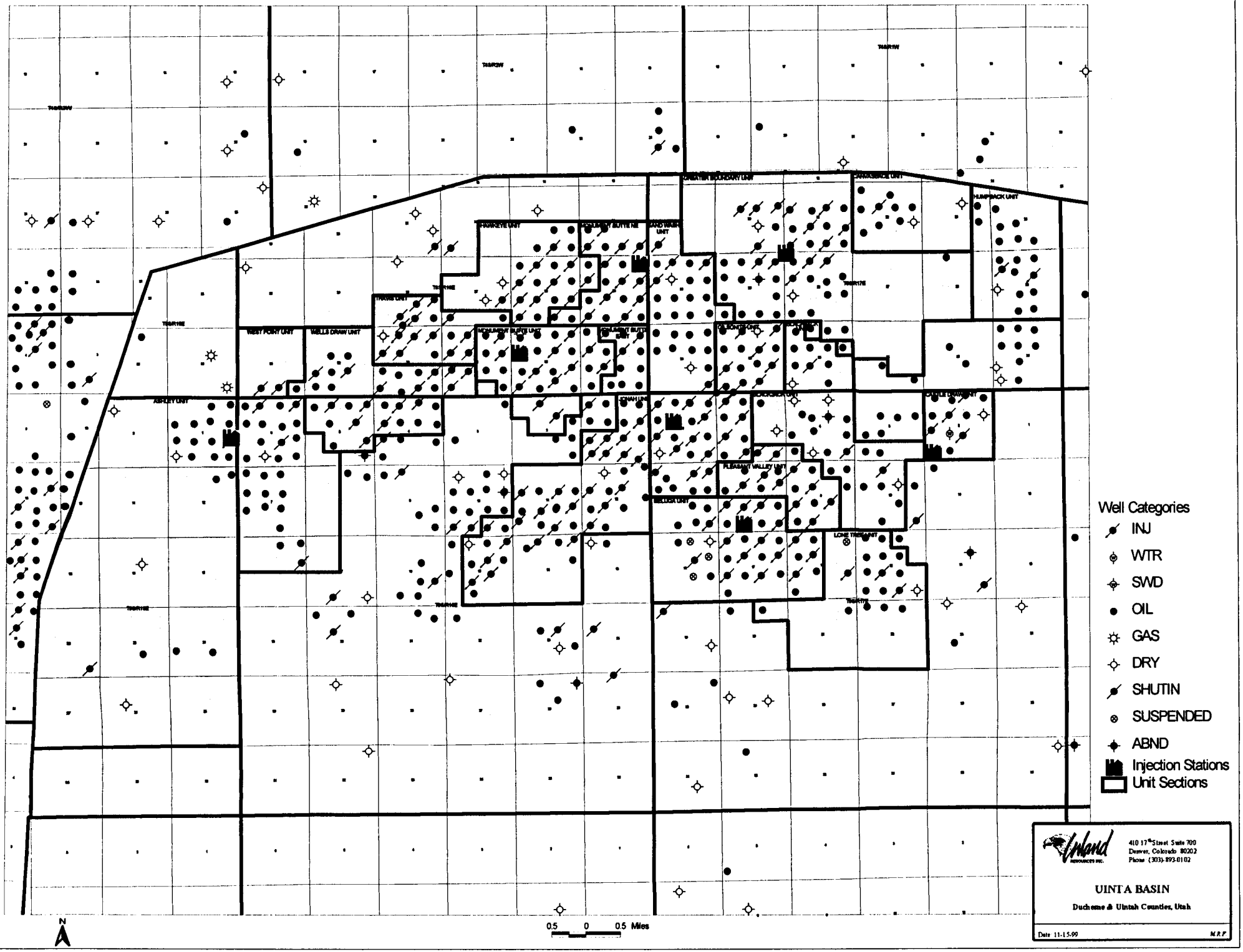
T8S-R3W
T8S-R2W
T8S-R1W
T9S-R3W
T9S-R2W
T9S-R1W
GREATER BOUNDARY UNIT
CASTLE PEAK UNIT
HUMPBACK UNIT
HAWKEYE UNIT
MONUMENT BUTTE NE
SANDWASH UNIT
TRIBE UNIT
WEST POINT UNIT
WELLS DRAW UNIT
MONUMENT BUTTE UNIT
MONUMENT BUTTE EXT UNIT
ASHLEY UNIT
ASHLEY EXT UNIT
JACKSON UNIT
CASTLE PEAK UNIT
PLEASANT VALLEY UNIT
BELUGA UNIT
LONE TREE UNIT
Well Categories
INJ
WTR
SWD
OIL
GAS
DRY
SHUTIN
SUSPENDED
ABND
Injection Stations
Unit Sections
N
0.5 0 0.5 Miles
Inland Resources Inc.
410 17th Street Suite 700
Denver, Colorado 80202
Phone (303)-893-0102
UINTA BASIN
Duchesne & Uintah Counties, Utah
Date 11-15-99
M.R.P.

EXHIBIT "D"

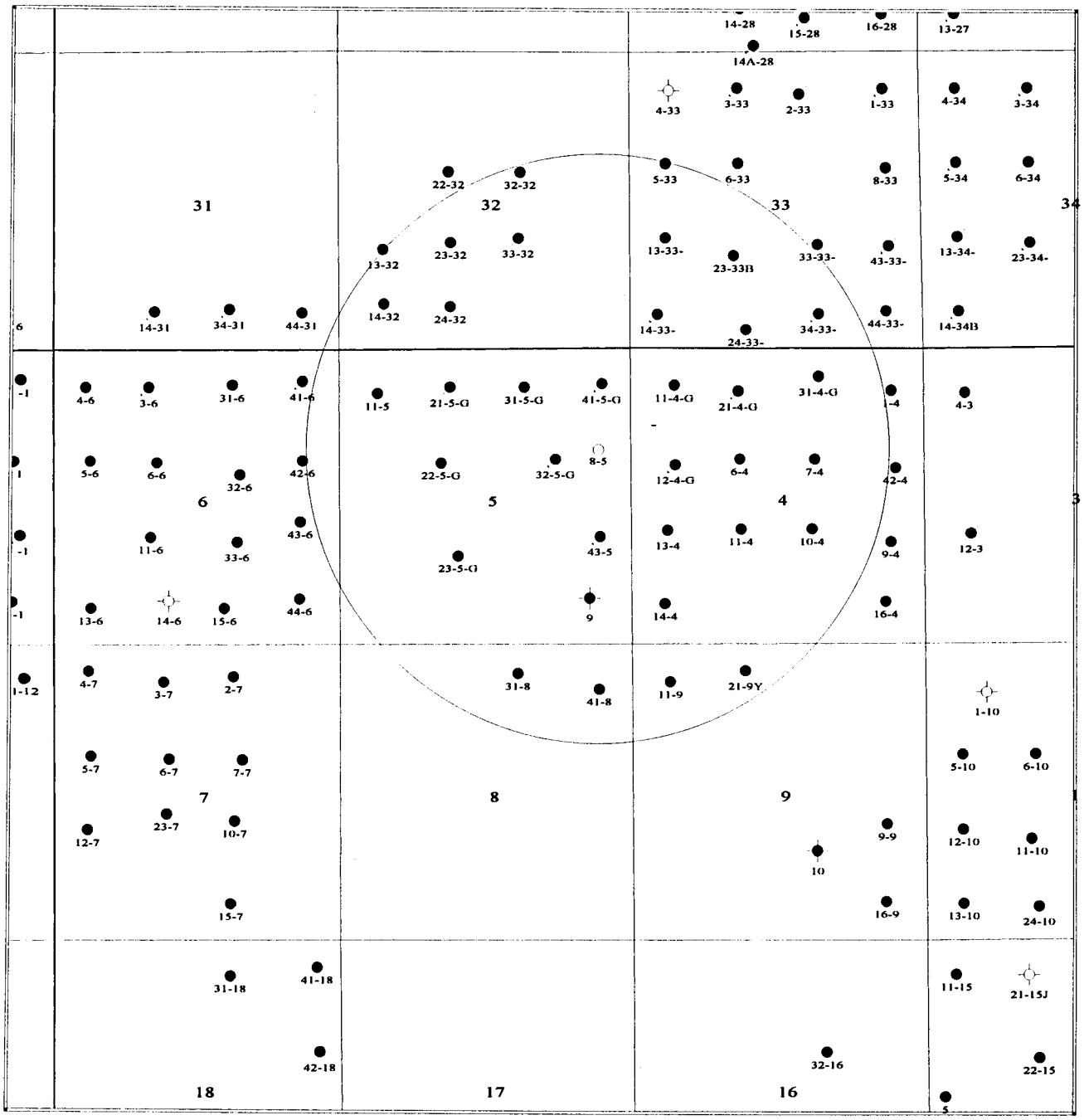

INLAND PRODUCTION COMPANY		
One Mile Radius S. Wells Draw #8-5-9-16		
Josh Axelson		11/23/99
	Scale 1:34567.83	

EXHIBIT "E"

INLAND PRODUCTION COMPANY

SOUTH WELLS DRAW #8-5-9-16
SEC. 5, T9S, R16E, S.L.B.&M.

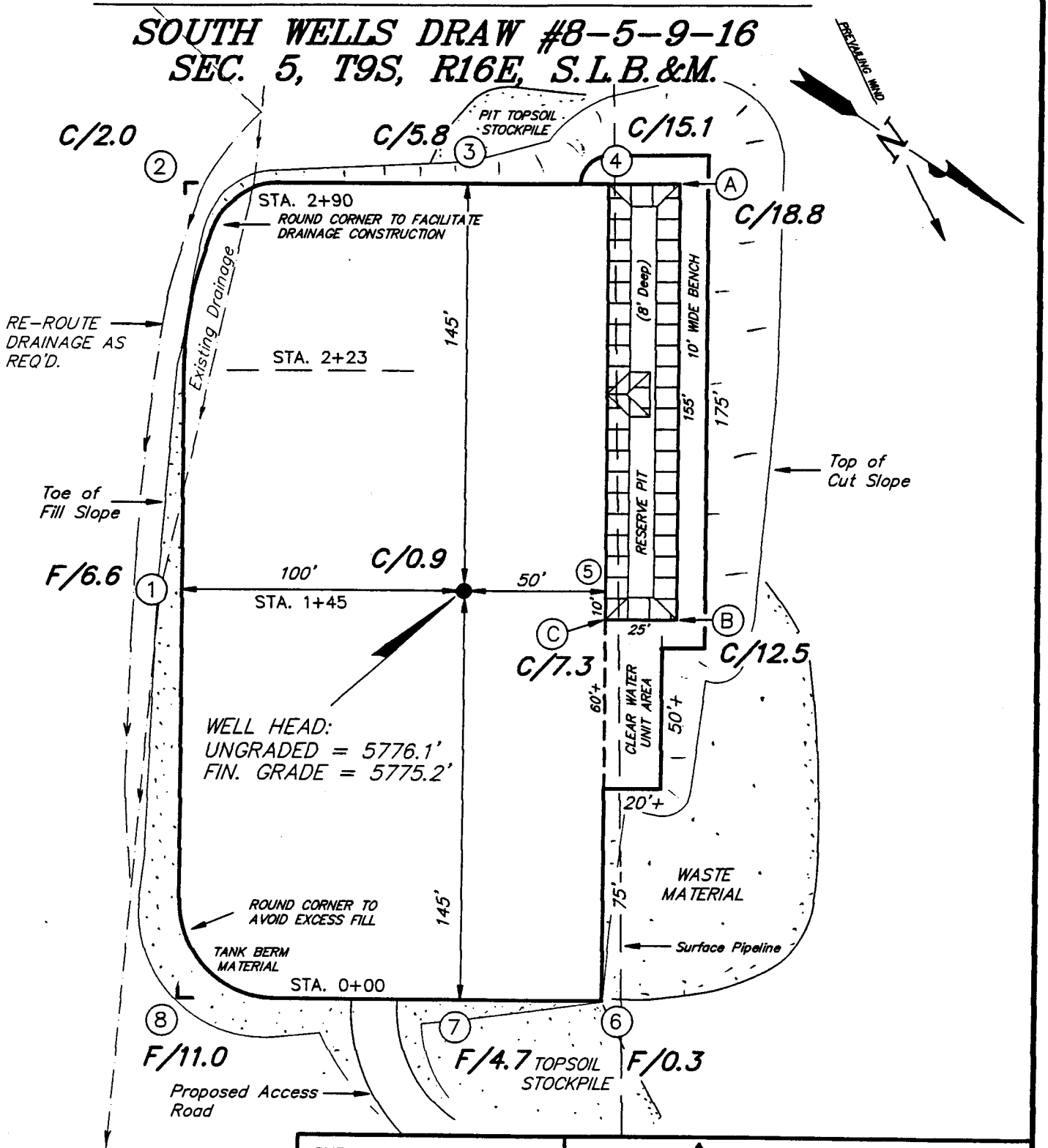

REFERENCE POINTS

139' SOUTH = 5772.5'
165' SOUTH = 5777.0'
178' WEST = 5782.9
210' WEST = 5785.2'

SURVEYED BY:	G.S.
DRAWN BY:	J.R.S.
DATE:	11-23-98
SCALE:	1" = 50'
REVISIONS:	

Tri State
Land Surveying, Inc.
(801) 781-2501
38 WEST 100 NORTH VERNAL, UTAH 84078

EXHIBIT "E-1"

CROSS SECTIONS

SOUTH WELLS DRAW #8-5-9-16

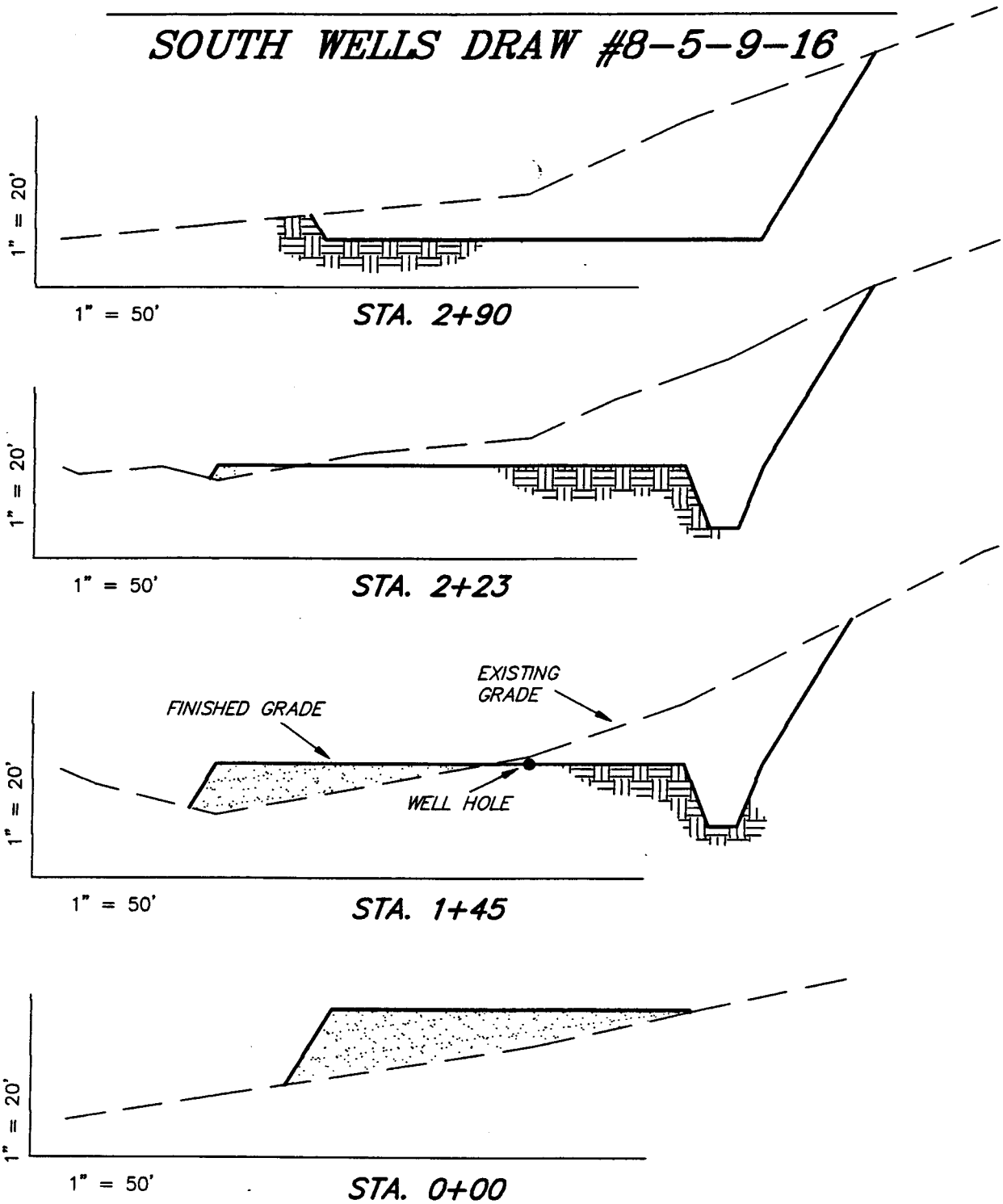

APPROXIMATE YARDAGES

CUT = 6,430 Cu. Yds.
FILL = 4,280 Cu. Yds.
PIT = 920 Cu. Yds.
6" TOPSOIL = 1,030 Cu. Yds.

Tri State
Land Surveying. Inc.
(801) 781-2501
38 WEST 100 NORTH VERNAL, UTAH 84078

TYPICAL RIG LAYOUT

SOUTH WELLS DRAW #8-5-9-16

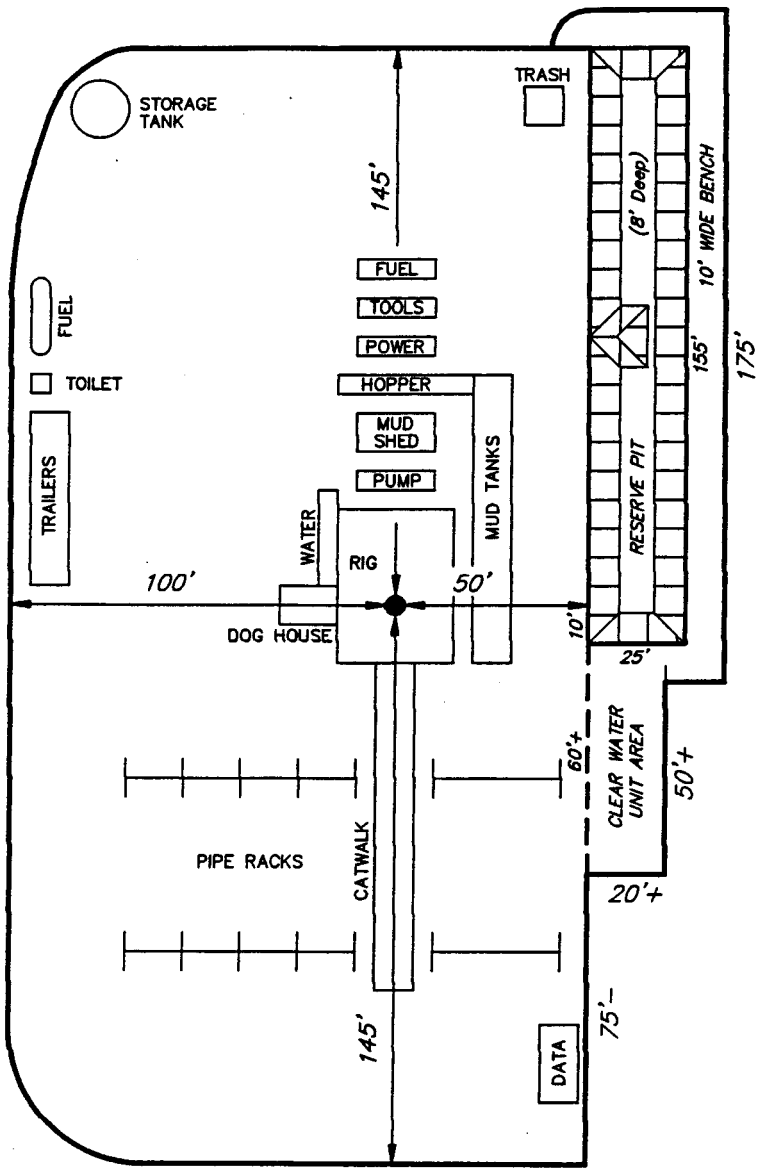

Tri State
Land Surveying. Inc.
(801) 781-2501
38 WEST 100 NORTH, VERNAL, UTAH 84078

Well No.: Wells Draw 8-5-9-16

CONDITIONS OF APPROVAL
APPLICATION FOR PERMIT TO DRILL

Company/Operator: Inland Production Company

Well Name & Number: Wells Draw 8-5-9-16

Lease Number: U-30096

Location: SE/NE Sec 5, T9S, R16E

GENERAL

Access pad from NE, off of existing road.

CULTURAL RESOURCES

See *CONDITIONS OF APPROVAL FOR INLAND RESOURCES MONUMENT BUTTE-MYTON BENCH WATERFLOOD ENVIRONMENTAL ASSESSMENT DUCHESNE AND UINTAH COUNTIES, UTAH EA NUMBER 1996-61.*

PALEONTOLOGICAL RESOURCES

See *CONDITIONS OF APPROVAL FOR INLAND RESOURCES MONUMENT BUTTE-MYTON BENCH WATERFLOOD ENVIRONMENTAL ASSESSMENT DUCHESNE AND UINTAH COUNTIES, UTAH EA NUMBER 1996-61.*

SOILS, WATERSHEDS, AND FLOODPLAINS

See *CONDITIONS OF APPROVAL FOR INLAND RESOURCES MONUMENT BUTTE-MYTON BENCH WATERFLOOD ENVIRONMENTAL ASSESSMENT DUCHESNE AND UINTAH COUNTIES, UTAH EA NUMBER 1996-61.*

WILDLIFE AND FISHERIES

See *CONDITIONS OF APPROVAL FOR INLAND RESOURCES MONUMENT BUTTE-MYTON BENCH WATERFLOOD ENVIRONMENTAL ASSESSMENT DUCHESNE AND UINTAH COUNTIES, UTAH EA NUMBER 1996-61.*

THREATENED, ENDANGERED, AND OTHER SENSITIVE SPECIES

See *CONDITIONS OF APPROVAL FOR INLAND RESOURCES MONUMENT BUTTE-MYTON BENCH WATERFLOOD ENVIRONMENTAL ASSESSMENT DUCHESNE AND UINTAH COUNTIES, UTAH EA NUMBER 1996-61.*

FERRUGINOUS HAWK: In the event that this well becomes a producing well, it must be equipped with a multi-cylinder engine or hospital muffler to reduce noise levels.

MOUNTAIN PLOVER: If new construction or surface disturbing activities are scheduled to occur between March 15 and August 15, detailed surveys of the area within 0.5 mile of the proposed location and within 300 feet of proposed access routes must be conducted to detect the presence of mountain plovers. All surveys must be completed prior to initiating new construction or surface disturbing activities (see Survey Protocol COAs EA Number 1996-61).

BURROWING OWL: Due to the proximity of the location to active prairie dog towns, there is no potential to encounter nesting burrowing owls between April 1 and July 15. No new construction or surface disturbing activities will be allowed between April 1 and July 15 within a 0.5 mile radius of any active burrowing nest.

OTHER

A CULTURAL RESOURCES BLOCK SURVEY IN

THE WELLS DRAW UNIT

NEAR WELLS DRAW, DUCHESNE COUNTY, UTAH

by

Heather M. Weymouth
Archaeologist

Prepared for:

PG&E Resources Company
85 South 200 East
Vernal, Utah 84078

Prepared by:

Sagebrush Archaeological Consultants
3670 Quincy Avenue, Suite 203
Ogden, Utah 84403

.Under Authority of Cultural Resources Use Permit No. 93-UT-54630

and

Utah State Antiquities Permit No. U-93-SJ-720b

Archaeological Report No. 644

February 7, 1994

INTRODUCTION

In December 1993, PG&E Resources Company (PG&E) of Dallas, Texas requested that Sagebrush Archaeological Consultants (Sagebrush) conduct a cultural resources inventory of an 1160 acre block area located near Wells Draw in Duchesne County, Utah. The proposed project is being carried out in order to improve production efficiency within the Wells Draw Unit (oil field) and provide electrical power to the existing well locations within the unit. The purpose of this survey is to identify cultural and paleontological resource sites which may be present within the project area.

The block area is located in T. 8S., R. 16E., S. 34 SW¼ and S. 33 SE¼ and SW¼; T. 9S., R. 16E., S. 4 NE¼ and NW¼ and S. 5 NE¼; NE¼NW¼; SE¼NW¼; NE¼SW¼; N½SE¼ on lands controlled by the Bureau of Land Management (BLM). The project area lies on the USGS 7.5' Quadrangles Myton SW, Utah (1964) and Myton SE, Utah (1964) (Figure 1). The field inspection was carried out by the author, Sheri L. Murray and Wendy E. R. Simmons between December 6 and 9, 1993 under authority of Cultural Resource Use Permit No. 93-UT-54630 and Utah State Antiquities Permit No. U-93-SJ-720b.

A file search for previously recorded cultural resource sites and paleontological localities located near the project area was conducted by the author on December 6, 1993 at the Bureau of Land Management, Vernal District Office to determine if any cultural resources projects had been conducted or sites recorded in or near the current project area. An additional file search was conducted by Wendy E. R. Simmons at the Division of State History, Salt Lake City on December 10, 1993.

A total of 600 of the project area's 1160 acres have been previously surveyed. These areas have been determined cleared of further survey efforts (for the purposes of this project) by the Vernal District BLM Archaeologist. More than 45 previous cultural resources projects have been conducted in the area of the present project. Due to the large number of projects in the area, individual project descriptions will not be listed. However, 13 cultural resources sites, including both project related sites and individual sites, have been previously recorded in the vicinity of the current project area. Three of these sites (42Dc586, 587, and 596) are located within the boundaries of the current project area. Following is a brief description of each of these sites:

Site 42Dc388. This site, located on a sandy bench above Wells Draw, is a small lithic scatter with core flakes, biface manufacturing flakes, and bifaces in all stages of manufacture. This site was recommended NOT eligible to the National Register of Historic Places (NRHP).

Site 42Dc389. This site, located on a bench on the east side of Wells Draw, is an old sheep camp consisting of tin cans, a crockery jar and many fragments of purple glass. Also noted were wood, bone and coal fragments. This site was recommended NOT eligible to the NRHP.

Site 42Dc535. This site, located on a bench south of Wells Draw, consists of a relatively sparse lithic scatter associated with a lithic source area. Tested cobbles and fragments of shattered lithic material are scattered over a broad area. The site was recommended ELIGIBLE to the NRHP.

Site 42Dc537. This site, located on a flat terrace in the bottom of Wells Draw, consists of a sparse lithic scatter with shattered core fragments and primary flakes in association with a rock alignment. The site was recommended ELIGIBLE to the NRHP.

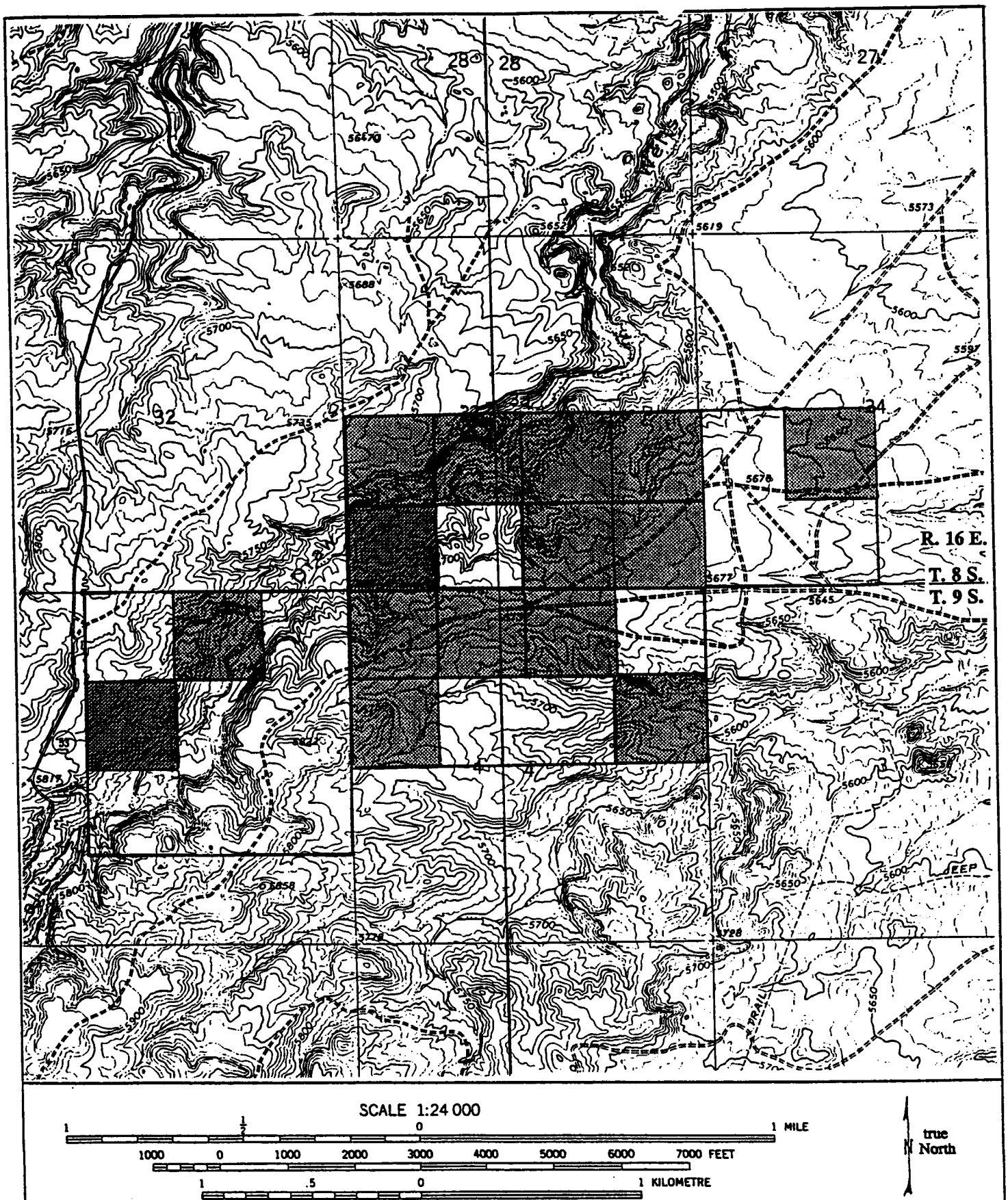

Figure 1. Location of previously surveyed and newly surveyed areas for the PG&E Pleasant Valley/Wells Draw Block Survey Project. Taken from: USGS 7.5' Quadrangles Myton SW, Utah (1964) and Myton SE, Utah (1964).

= Previously surveyed areas = Newly surveyed areas

Sites 42Dc538. This site, located along a sandstone outcrop on the east slope of Wells Draw, is a sparse lithic scatter consisting of core shatter fragments and primary flakes of a local siltstone material. One hammerstone and one biface blank were found at the site. The site was recommended ELIGIBLE to the NRHP.

Site 42Dc555. This site, located near Pleasant Valley, consists of a diffuse scatter of detritus associated with a lithic source area. Materials located include, primary and secondary lithic flakes and two possible tools. The site was recommended NOT eligible to the NRHP.

Site 42Dc584. This site, located on a terrace on the north crest of Wells Draw, is a lithic scatter/biface blank preparation locus. No tools were located at the site. The site was recommended NOT eligible to the NRHP.

Site 42Dc585. This site, located on a terrace on the north crest of Wells Draw, is a core reduction and biface preparation locus. A variety of cores, core fragments and primary flakes, fifty bifaces, one hammerstone, utilized flakes and biface blades were noted at the site. The site was recommended ELIGIBLE to the NRHP.

Site 42Dc586. This site, located on a south facing slope above Wells Draw, is a lithic scatter of primary and secondary flakes. No tools were located at the site. The site was recommended NOT eligible to the NRHP.

Site 42Dc587. This site, located on a terrace on the north crest of Wells Draw, is a lithic source area. Tested cores and core fragments and the remains of one clear medicine bottle were located at the site. The site was recommended NOT eligible to the NRHP.

Site 42Dc596. This site, located on a gentle slope near Wells Draw, is a lithic tool scatter consisting of chert tool blanks, one scraper, two bifacially flaked cobbles, one biface blade and one primary flake. The site was recommended ELIGIBLE to the NRHP.

Site 42Dc597. This site, located just east of Highway 53 above Wells Draw, is a historic trash scatter consisting of a broad scatter of historic trash including bailing wire, tin cans, auto parts, oil cans and glass. The site was recommended NOT eligible to the NRHP.

No paleontological localities are listed as being located within the current project area. The National Register of Historic Places (NRHP) was consulted prior to the commencement of fieldwork for the present project. No NRHP sites were found located in the vicinity of the current project area.

ENVIRONMENT

The block survey area lies in the vicinity of Wells Draw, approximately eight miles south-southeast of Myton, Utah. The area is characterized by low rolling tablelands dissected by deep drainages and low eroding bedrock outcrops of sandstone and limestone. Soils in the area are very fine light tan to medium brown silty sands. The surface sediments consist of an interfingering of fluvial deposits and thinly bedded Pleistocene lake bed deposits. Sediments contain a moderate amount of Pleistocene gravels and some small areas of Eocene Green River Formation are visible in eroded areas. The elevation of the survey area ranges from 5600 feet to 5820 feet a.s.l. Vegetation in the area covers approximately 30 percent of the surface and is predominately shadscale community species. Noted species include buckwheat, rabbitbrush, four-winged saltbrush, winterfat, narrow leafed yucca, greasewood, prickly pear cactus and a variety of forbs and low grasses. The nearest permanent water source is Antelope Creek which is located approximately 6.0 miles to the northwest. Many seasonally flowing drainages and washes are present within the immediate project area. These seasonal water sources were, no doubt, the primary source of water in this area historically. Natural disturbance in the area is primarily in the form of arroyo cutting and sheetwash erosion. Cultural disturbance includes a number of improved and unimproved oil field roads, producing oil wells and oil field pipelines which are located within the boundaries of the current project area.

METHODOLOGY

The survey area covered during this project consists of an 1160 acre block area located along Wells Draw, approximately 8.0 miles south-southeast of Myton in Duchesne County, Utah. Six hundred acres of the 1160 total project acres have been previously surveyed. These 600 acres have been cleared (for the purposes of the current project) by the Vernal District BLM Archaeologist of further survey efforts. The areas to be surveyed were identified using existing landmarks as points of reference including prominent topographic features, well locations, roads and USGS Cadastral Survey Markers. The remainder of the block area was surveyed in parallel transects spaced no more than 15 meters apart to check for evidence of cultural activity or paleontological localities which may be located within the project area. A total of 560 acres was surveyed during this project.

RESULTS

A total of eight cultural resource sites, five isolated artifacts (Figure 2) and 24 paleontological localities (Appendix) were recorded during the Wells Draw Block Survey. These sites include three historic trash scatters (Sites 42Dc790, 791 and 794), one historic trash scatter with a prehistoric component (Site 42Dc789) and four prehistoric archaeological sites (Sites 42Dc792, 793, 795 and 796). Isolated artifacts (IF1-IF5) include one sanitary can (IF1), one solder-dot milk can (IF-2), one secondary lithic flake (IF3) and two horseshoes (IF4 and IF5). In addition, three previously recorded prehistoric sites (42Dc586, 587, 596) are located within the current project area. These sites consist of one lithic scatter, one lithic source area and one lithic tool scatter (see the site descriptions on page 4). Paleontological materials were located within the project corridor by Paleontologist Alden Hamblin. These materials, consisting of vertebrate, invertebrate, plant and vertebrate track fossils are be addressed by Mr. Hamblin in a separate report (Appendix).

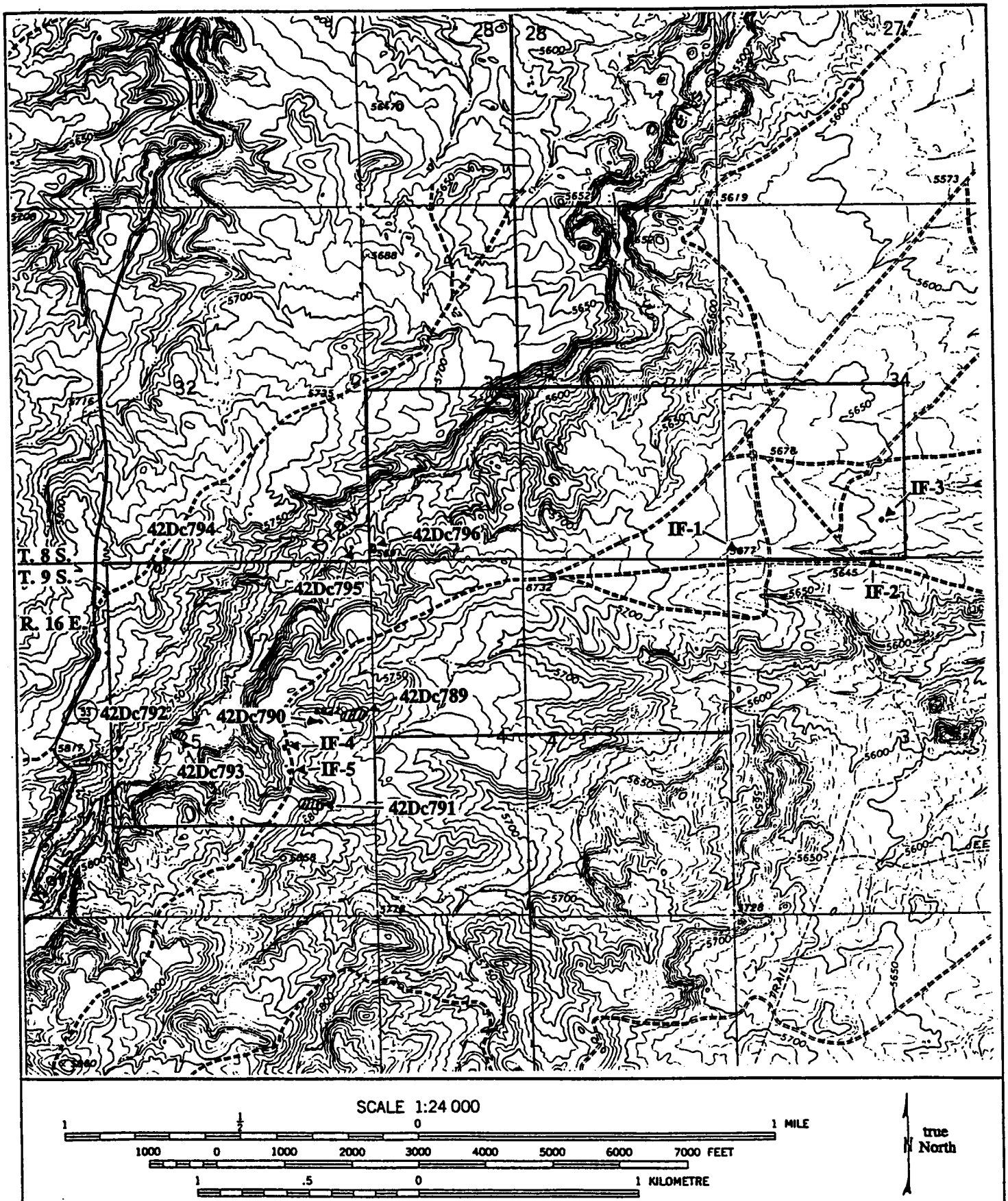

Figure 2. Location of sites (42Dc789 - 42Dc796) and isolated artifacts (IF-1 - IF-5) found during the Pleasant Valley/Wells Draw Block Survey Project. Taken from: USGS 7.5' Quadrangles Myton SE, Utah (1964) and Myton SW, Utah (1964).

Site 42Dc789

Site 42Dc789 is a historic encampment with a prehistoric component. The site lies on a series of tablelands/mesas cut by a number of drainages and arroyos. More locally, the site covers a small knoll and extends to the east along a finger ridge. The site measures 88 meters east-west by 60 meters north-south. The prehistoric component consists of a sparse dispersed lithic scatter which includes two biface fragments, and two tertiary flakes. The historic component consists of widely scattered historic trash associated with three rectangular rock alignments which may represent fire hearths. These possible hearths are lined with linear blocks of calcareous sandstone. No charcoal or burnt/oxidized soils were visible in any of the three possible historic hearth features, although one of the features did have axe-cut wood scattered near it. Historic artifacts at the site include several standard solder dot condensed milk cans, one "Hersheys" cocoa tin press-on lid, a metal key-opened coffee tin lid, a horseshoe, a metal barrel stave, wire nails, axe-cut wood, and various miscellaneous tin can fragments. The historic occupation of the site seems to have been very short term and may have consisted of several visits over a period of years, probably by antelope hunters. The earliest datable artifact is a key-opened reclosure coffee tin, the style of which was first produced in 1917 (IMACS 1992:471.3). Most of the historic artifacts, although not as tightly datable, seem to fit into this general time period. Examination of the artifact assemblage as a whole dates this site to between 1917 and 1940.

Site 42Dc790

Site 42Dc790 is a historic trash scatter situated near the edge of a low butte in an area of dissected tablelands. The site measures 25 meters east-west by 14 meters north-south. The site consists of six tin cans and an aluminum screw-top "Presto" lid with a plastic interior liner. The tin cans include a standard hinge-top tobacco tin, two solder dot condensed milk cans, a heavily rusted sanitary can and two sanitary cans with cut-around openings. No other artifacts or features were noted. Examination of the artifact assemblage as a whole dates this site to between 1940 and 1970.

Site 42Dc791

Site 42Dc791 is a sparse historic trash scatter located on the rim of a southwest facing ridge and accompanying slope in an area of dissected tablelands. The site measures 62 meters east-west by 30 meters north-south. The trash appears to have been deposited on the ridge top and has subsequently been washed down into the drainage. The site consists of approximately 35 tin cans and the remnants of at least four broken beverage bottles. The tin cans include at least 12 standard hinge-top tobacco tins, 20+ solder dot condensed milk cans, a heavily rusted sanitary can with embossed lettering "TREE TEA". Three beverage bottle base fragments with embossed lettering present, 40+ fragments of clear bottle glass and 35+ fragments of deep purple bottle glass were located. The site appears to be surficial in nature, no other artifacts or features were noted. Examination of the artifact assemblage as a whole dates this site to between 1920 and 1964.

Site 42Dc792

Site 42Dc792 is a prehistoric lithic scatter situated on a small south facing ridge which slopes gently to drainages on three sides. The site measures two meters east-west by two meters north-south. The site contains no artifacts and only a single feature. The feature is a hexagonal shaped rock alignment consisting of six upright sandstone slabs. No charcoal or ash stain was discernible within the feature or in the surrounding area. The lack of cultural mate-

rial at the site may be c to heavy wind and water erosion, alt igh no artifacts were noted in the drainages directly adjacent to the site. Because there are no diagnostic artifacts and no datable construction style it is not possible to tie the site to a particular time period.

Site 42Dc793

Site 42Dc793 is a large prehistoric campsite/long term occupation site located on a silt dune which is bordered by a small drainage on the eastern and western edges and on the north by the Wells Draw drainage. The site measures 88 meters east-west by 48 meters north-south. The site is characterized by a generally heavy scatter of fire-cracked-rock (FCR) and lithics. Cultural materials are eroding out across the dune with nine specific areas of concentration including six FCR scatters (possible fire hearths), three lithic concentrations and one charcoal lens. The possible hearths are all well dispersed. Three of the possible hearths still contain charcoal or ash stains. Varying amounts of lithic debitage were associated with each of the FCR scatters. Three heavy concentrations of lithic debitage were noted at the site. Two of these concentrations were associated with anthills. In these concentrations as many as 150 lithic flakes were noted in a one square meter area. The third lithic concentration was in a large eroded area measuring 10 meters north-south by six meters east west. Approximately 200 flakes of various sizes were observed in this area. Four bifaces and two possible mano fragments were also present. Because there are no diagnostic artifacts it is not possible to tie the site to a particular time period.

Site 42Dc794

Site 42Dc794 is a historic and modern trash scatter located on top of a ridge. The site lies just off of an unimproved road in an active oil field. The site begins at the road edge and extends down the gentle slope. The site measures 52 meters east-west by 70 meters north-south. Most of the artifacts are modern or questionable as to date, with the exception of three hole-in-cap tin cans and a hand soldered overlapping square (probable meat) tin. Between 20 and 30 older looking solder dot condensed milk cans, all puncture opened, are included in the materials of questionable date. Modern trash includes a hub cap, batteries, smooth wire, a screw-top ketchup bottle, sanitary cans, fragments of green rubber and a car jack. The site appears to have no features and no depth. Examination of the artifact assemblage as a whole dates this site to between 1903 and the present.

Site 42Dc795

Site 42Dc795 is a low density prehistoric lithic scatter consisting of various stages of lithic debitage scattered across a low elongated north-south trending silt mound. The site measures 28 meters east-west by 20 meters north-south. Three tools were present including one with fine unifacial working on a single edge, one bifacially worked tool which appears to have been reworked into a drill and one biface tip section of brown chert. No diagnostic tools were found and no features were located at the site. Because there are no diagnostic artifacts and it is not possible to tie the site to a particular time period.

Site 42Dc796

Site 42Dc796 is a prehistoric campsite located on a low north-south trending silt mound which is dissected by several small drainages. The site measures 24 meters east-west by 36 meters north-south. Six tools were present including five bifaces, one large corner-notched projectile point. Between 20 and 25 lithic flakes were located at the site. Most of the cultural

materials, including four of the tools, are concentrated in a five square meter area. Lithic debitage consists mainly of secondary flakes with tertiary and secondary flakes also present. The site appears to be surficial as no cultural materials were noted in the drainage cuts which cross the site. Although no materials were noted eroding out of nearby drainage cuts, the large number of tools found concentrated within such a small area could suggest a cache. It is possible that additional significant materials may exist at this location. One diagnostic tool, a large corner-notched projectile point, was found at the site. This projectile point style generally dates to the Archaic time period (Jennings 1986:117).

DISCUSSION

There are a number of marked differences between the prehistoric versus the historic site locations found during the course of this survey. In general, those sites falling into the prehistoric category were found to be located in close proximity (within 300 feet) to the main Wells Draw drainage. These sites tended to lie at altitudes between 5800 feet and 5820 feet a.s.l. (5695 feet a.s.l. average). In addition, these sites were all located in association with silt mounds or dunal structures. In contrast, those sites falling into the historic category were found to be located farther away from the main Wells Draw drainage (between 1400 and 2000 feet distant). Historic sites tended to be located at higher altitudes between 5800 feet and 5820 feet a.s.l. (5810 feet a.s.l. average). The historic sites were generally located in rocky soils on or near high mesa tops, points or knolls.

It is likely that these differences simply reflect the types and patterns of use necessitated during these two general periods of use in this area. Prehistoric use of the area reflects occupation of similar areas in the Uintah Basin and other areas where prehistoric use often centered around sand/silt dunal formations located in close proximity to large drainages. These areas provided better protection from the elements and a greater variety of flora and fauna than did the upper tableland areas. Historic use of the area, as indicated by the sites found during this survey, appears to have been in the form of short term encampments on the higher tableland/mesa locations. These areas would provide for better visibility during use by sheepherders and ranchers who have used the area for many years for ranging of stock animals.

RECOMMENDATIONS

Three historic trash scatters (Sites 42Dc790, 791 and 794), one historic trash scatter with a prehistoric component (Site 42DC789), four prehistoric archaeological sites (Sites 42Dc792, 793, 795, and 796) five isolated artifacts and 24 paleontological localities were recorded during this block survey in the Wells Draw Unit. In addition, three previously recorded prehistoric sites (42Dc586, 587 and 596) are located within the current project area. Recommendations concerning paleontological resources located during the course of this inventory are addressed by Paleontologist Alden Hamblin in a separate report (Appendix).

As part of this inventory it is necessary to evaluate the sites found for eligibility to the NRHP based on criteria present in Federal regulations set forth in *36 CFR 60.4*:

> The quality of significance in American history, architecture, archeology, and culture is present in districts, sites, buildings, structures, and objects that possess integrity of location, design, setting, materials, workmanship, feeling, and association, and:
>
> (A) that are associated with events that have made a significant contribution to the broad patterns of our history; or
>
> (B) that are associated with the lives of persons significant in our past; or
>
> (C) that embody the distinctive characteristics of a type, period, or method of construction, or that represent the work of a master, or that possess high artistic values, or that represent a significant and distinguishable entity whose components may lack individual distinction; or
>
> (D) that have yielded, or may be likely to yield, information important in prehistory or history.

Based upon the above criteria sites 42Dc789, 790, 791, 792, 794 and 795 are recommended NOT eligible to the NRHP. Sites 42Dc793 and 42Dc796 are recommended eligible to the NRHP. Previously recorded site 42Dc796 has been recommended eligible to the NRHP. Previously recorded sites 42Dc586 and 42Dc587 have been recommended NOT eligible to the NRHP.

Those sites which have been recommended NOT eligible to the NRHP have been so recommended due to their general lack of integrity as a whole. These sites which do not exhibit cultural depth or significant diagnostic artifacts cannot be tied to any known habitation site or sites in the area. Following are specific recommendations for those sites which are recommended eligible to the NRHP.

Site 42Dc793

Site 42Dc793 is recommended ELIGIBLE to the NRHP under criterion D. It is likely that intact cultural deposits still exist at this site location which may provide data useful in answering questions pertaining to the nature of prehistoric habitation sites in the area and contribute information helpful in understanding broad patterns of use within the Uintah Basin. The site is situated on a silt dune located directly above the Wells Draw Drainage. The nature of deposition at this location suggests the possibility of intact cultural deposits within the

sediments. A number c partially buried features in the form o. roding probable fire hearth locations are visible at the site. In addition, a heavy scatter of lithic material is present over the entire site and exposed in heavier concentrations in eroded areas. Avoidance of this site is recommended should any proposed construction activities be slated for this area.

Site 42Dc796

Site 42Dc796 is recommended eligible to the NRHP under criterion D. It is possible that intact cultural deposits may exist at this site location which may provide data useful in answering questions pertaining to prehistoric use of the area and contribute information helpful in understanding broad patterns of use within the Uintah Basin. The site is situated on a low silt mound on a terrace above Wells Draw. Although no cultural features were exposed on the surface of the site, the nature of deposition at this location suggests the possibility that intact cultural deposits remain below the site's surface. The heavy concentration of tools in such a small area suggests that there may be significant materials still in situ at this location. Avoidance of this site is recommended should any proposed construction activities be slated for this area.

Site 42Dc596

Site 42Dc596, recorded by Sagebrush during a previous survey, was recommended eligible to the NRHP under criterion D. It is likely that intact cultural deposits still exist at this site location which may contribute information helpful in understanding broad patterns of use within the Uintah Basin. The site lies on loose sandy sediments and artifacts can be seen partially buried in the sand. The sandy sediments coupled with the high density of tools located at this site suggest the probability of significant in situ sub-surface cultural deposits. Avoidance of this site is recommended should any proposed construction activities be slated for this area.

This investigation was conducted using techniques which are considered to be adequate for evaluating cultural and paleontological resources which could be adversely affected by the project. However, should such resources be discovered during construction, a report should be made immediately to the BLM District Archaeologist, Vernal District Office, Vernal, Utah.

REFERENCES CITED

Intermountain Antiquities Computer System (IMACS) Users Guide.
1982 University of Utah, Salt Lake City, Utah.

Jennings, Jesse D.
1986 Prehistory: Introduction. In: *Handbook of North American Indians*, 11:113-119. Smithsonian Institution, Washington D.C.

APPENDIX

PG&E

WELLS DRAW UNIT

Sections 33 and 34, T8S, R16E and

Sections 4, 5, T9S, R16E, SLB&M

Duchesne County, Utah

PALEONTOLOGY REPORT

FOR

SAGEBRUSH ARCHAEOLOGICAL CONSULTANTS
3670 QUINCY AVENUE, SUITE 203
OGDEN, UTAH 84403

BY

ALDEN H. HAMBLIN
PALEONTOLOGIST
235 EAST MAIN
VERNAL, UTAH 84078

FEBRUARY 11, 1994

TABLE OF CONTENTS

INTRODUCTION 1

Figure 1. Location Map 2

METHODS USED FOR SURVEY. 3

Figure 2. Areas Traversed during survey 4

RESULTS OF PALEONTOLOGICAL SURVEY. 5

Table 1. Summary of fossil sites. 5

Figure 3. Fossil Sites Map. 6

SUMMARY AND RECOMMENDATIONS. 8

Figure 4. Areas of Avoidance Map 9

SELECTED REFERENCES. 10

APPENDIX A - Paleontological Data Sheets . . . . . 1 - 54

INTRODUCTION

At the request of Sagebrush Archaeological Consultants, a paleontological survey was conducted on the PG&E Wells Draw Unit of the Monument Butte Oil Field. The study area location is approximately 9 miles south and 4 mile west of Myton, Duchesne County, Utah. More specifically the study area includes the southwest quarter of section 34 and the south half of section 33, township 8 south, range 16 East; and the north half of section 4 and nine/sixteenths of section 5 extending equally from the northeast corner. (See location Map on page 2.)

All rock outcrops in this area are part of the lower unit of the Uinta Formation of Upper Eocene age (Bryant, et.al 1989 and Bryant 1992).

The Uinta Formation is primarily composed of fluvial deposits (stream laid) and it is seen in the field as a series of interbedded sandstones, mudstones, and claystones. Many of the sandstones represent paleostream channels and are usually lens shaped in cross section and shoe string-like horizontally. Occasional limestone beds are seen interedded with the mudstones and claystones in and around the study area. According to Bryant, et. al (1989), these are lacustrian limestones deposited from time to time when Lake Uinta waters inundated the mudflat environment of the Uinta Formation in the central Uinta Basin.

The mudstones and claystones of the Uinta Formation usually represent over-the-bank deposits on ancient flood plains and quite often contain vertebrate fossils. Fossils also occur in some of the sandstones. The Uinta Formation is known for its fossil vertebrate fauna of mammals, turtles, crocodilians, and occasional fish remains (Hamblin, 1987). Plant fossils, though not common, have also been found in the Uinta Formation. A number of fossil plant localities have been recorded by this investigator during the past year in the general area of the study area.

Some of the benches in the study area are covered with what Bryant (1992) refers to a "Older pediment deposits (Pleistocene)". He mapped some of these deposits in the southeast corner of section 33, they cover nearly all of section 34 T8S, R16E, and they are present at the very northeast corner of section 4, T9S, R16E. Bryant (1992) describes these pediment deposits as "Boulder, cobble and pebble gravel, sand and silt on dissected pediment remnants".

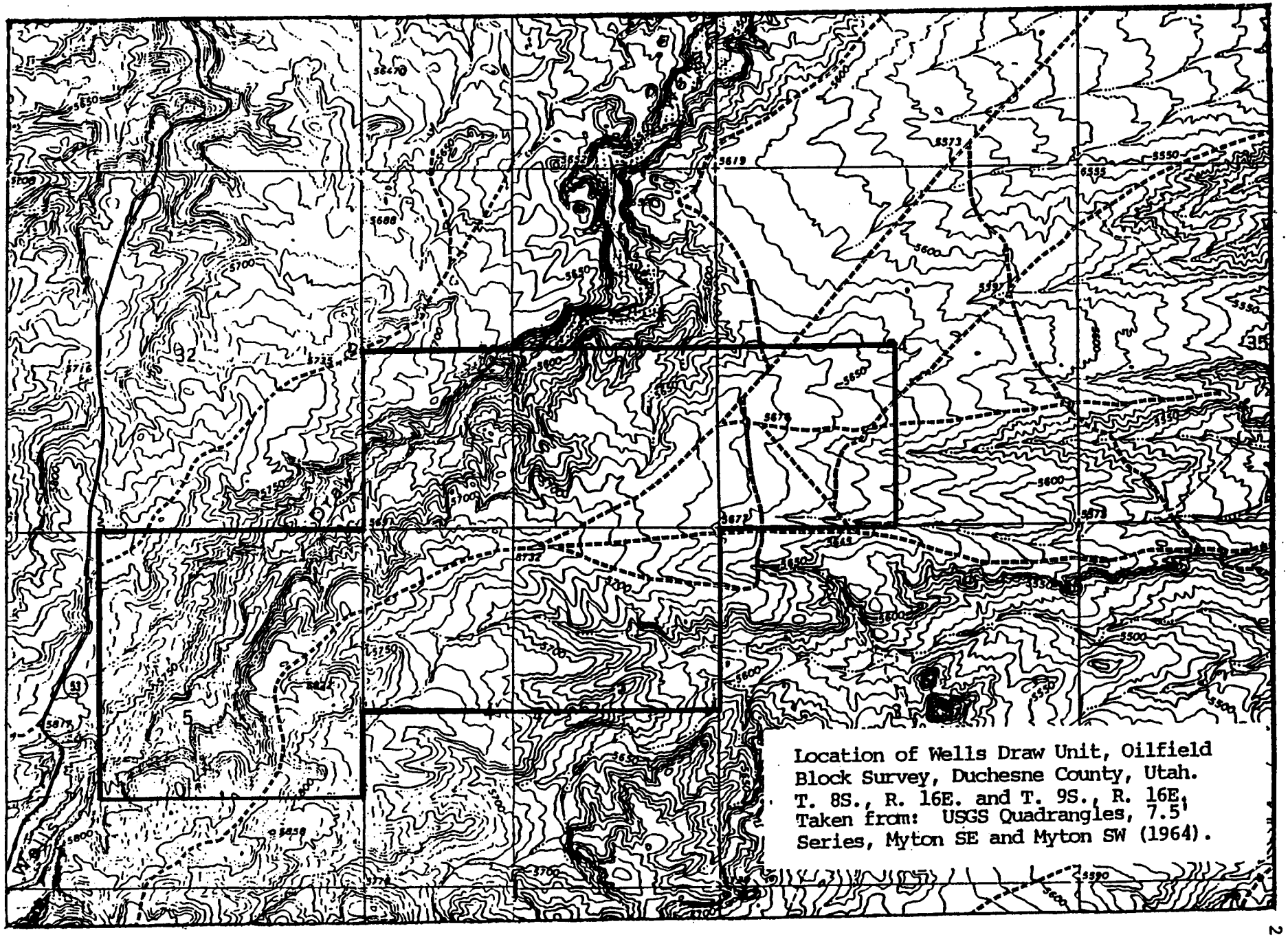

Figure 1. Location Map of Wells Draw Unit.

METHODS USED FOR THE SURVEY

This investigator wrote an earlier report on the paleontology of the Monument Butte Field for Mariah Associates, Laramie, Wyoming (Hamblin, 1992). This report gave information on the geology and paleontology of the general area as well as information on known fossil localities in the immediate area. During 1993, paleontology surveys have been preformed at various well locations and pipelines southeast of the present study. A number of fossil sites were identified during these surveys. The investigator for this report is therefore very familiar with the paleontology of the immediate area and has used this knowledge in preforming this survey and writing the report.

Color stereo areal photographs from the Vernal District of the Bureau of Land Management were examined to determine extent and kinds of rock exposures found in the study area. These were also used to plot a particularly important marker bed through the study area.

This investigator visited the study area on four different days during the months of December and January (1993-1994) to examine rock exposures for fossil material (very little snow this winter). This consisted of walking up and down over the exposed stratigraphy as well as horizontally along beds with known fossil contents. Figure 2 shows the areas traversed during the survey. It is felt that a good representation of the stratigraphy and areal extent of rock exposures of the Uinta Formation were covered.

Previously known fossil sites (2 identified during the archaeological survey and one identified during an earlier paleontological survey on a well location) and new fossil locations identified during the survey were plotted on a topographical map of the area (7.5 Minute Quadrangle maps). Paleontological Data sheets were filled out on all these sites.

Pleistocene pediment surfaces were not examined closely during this survey. The author is not aware of any Pleistocene fossil discoveries in these pediment deposits in the immediate area. Those examined in the past have not produced any fossils. The probability of encountering Pleistocene fossils is consided quite low, but it is possible. Some unfossilized bones were found on a sandy shelf next to the stream bed in Wells Draw (SW/NW/SW/NE - sec. 5). Photos of these bones were taken and compared with bones in the osteology collection at the Utah Field House in Vernal and identified as domestic sheep bones.

Recommendations are based on the known potential of the Uinta Formation and Pleistocene deposits and on the finding of material during this survey.

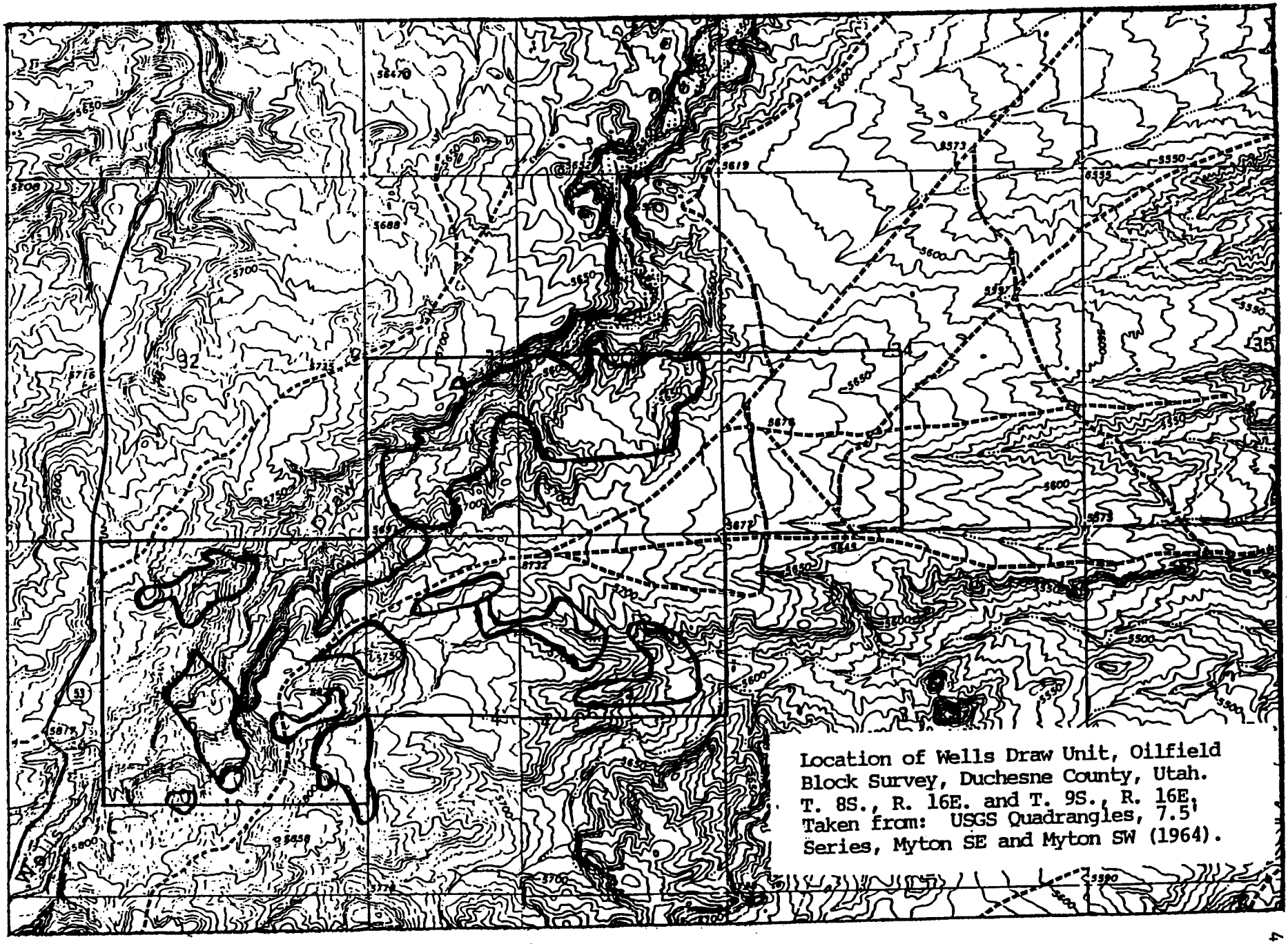

Figure 2. Areas traversed during paleontological survey.

RESULTS OF PALEONTOLOGICAL SURVEY

Three fossil sites had been identified prior to the present survey. The current survey identified 24 additional fossil sites scattered throughout the study area where the Uinta Formation is exposed and one site just outside the boundary of the study area (figure 3). From the total of 27 sites now known, vertebrates, invertebrates, plants, and vertebrate tracks are represented.

The importance of these sites varies from unimportant to critical. The quality of the material is generally poor to marginally good. Two sites, however, are very significant in the material present (underlined in table 1). All of the sites are valuable from the stand point of providing information that will help better understand the ancient environments of the Uinta Formation in this area.

TABLE 1.
SUMMARY OF FOSSIL SITES

(L=leaf impressions, S=stem impressions, W=wood impressions, C=carbon chunks, G=gastropods, F=fish, T=turtle, M=mammal, B=bird?)

LOCALITY #	PLANTS	INVERTEBRATES	VERTEBRATES	TRACKS	LOCATION (section)
42DC155PV	LS		M		SW/NW/SE - 5
42DC159I		G			SW/SW/NE - 33
42DC160P	S				S/NW/SW - 33
42DC161V			T		NW/SW/SW - 33
42DC162P	CS				SE/NE/SW - 33
42DC163P	S				S/SW/NE - 33
42DC164VP	S		T		SW/SE/NE - 4
42DC165VP	S		T		NW/SE/NE - 4
42DC166P	S				NE/SW/NE - 4
42DC167V			F		SE/SE/NW - 5
42DC168P	S				NW/SW/NE - 5
42DC169V			T		NE/NW/SE - 5
42DC170V			T		SE/SE/NE - 5
42DC171V			T		SE/SE/NE - 5
42DC172P	S				SW/SE/NE - 4
42DC173V			T		SE/NE/SW - 5
42DC174I		G			NE/SE/SE - 5
42DC175PV	S		T		SW/NE/SE - 5
42DC176P	LS				NW/SW/NW - 4
42DC177TIVP	S	G	B	M	SE/NE/NW - 4
42DC178V			T		SW/SW/SW - 4
42DC179P	LS				SW/NE/NE - 5
42DC180V			T?M?		SW/NE/NE - 5
42DC181V			T		NW/NW/NW - 4
42DC182PV	S		T		SE/SW/NE - 5
42DC183V			T		SE/NE/NW - 5
42DC184P	W				SW/NW/NE - 5

Fifteen sites have evidence of plant fossils, thirteen sites have turtle shell fragments, two, possibly three, have evidence of mammal fossils with one being a track site, one has possible bird bones, and three have invertebrate gastropods.

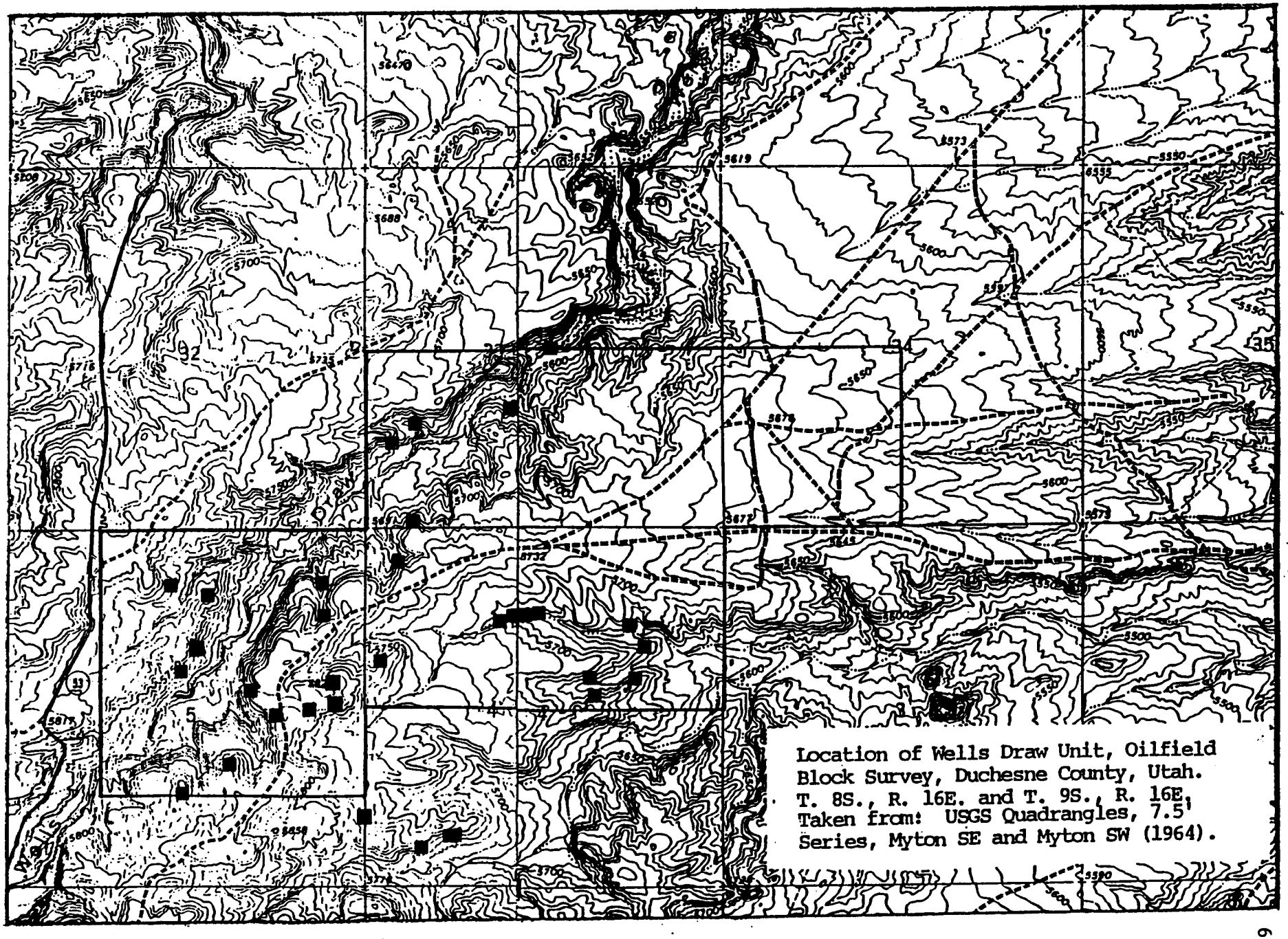

Figure 3. Site where fossils were found during survey.

Plant Fossils
Not much has been published on plant fossils from the Uinta Formation (Hamblin, 1987). Just this past year this investigator has identified a number of other similar plant sites southeast of this study area. Material from these site may provide information of some of the flora during Uintan times.

Invertebrate Fossils
Three sites have invertebrate fossils in the form of gastropods. Ostrocods were also noted in some chert fragments. There are probably many more invertebrate sites than were noted in this study. The limestone lacustrian beds in this area usually contain gastropods and ostrocods if one looks hard enough for them.

Vertebrate Fossils
Fossil gar pike scales were observed at one site. However, these are not uncommon in some areas of the Uinta Formation.

Thirteen sites had turtle shell fragments. These are the most commonly recognized vertebrate fossil in the Uinta Formation. Most of the material found during this study was rather poor in quality. Some of it appeared to have been weathered prior to deposition. However, several sites had fairly good preservation with the possibility of identifiable material. These were sites 42DC164VP, 42DC170V, and 42DC171V.

Two and possibly three sites had evidence of fossil mammals. One of these is site 42DC155VP where a chunk of sandstone has an impression of the jaw of a small mammal, possibly Protoreodon, an early even-toed hoofed mammal (most common mammal found in the Uinta Formation). Another site, 42DC180V had a bone fragment which possibly could be mammal, but its weathered condition made that identification questionable. The most critical site found with regards to mammals is the track site 42DC177TIVP.

Fossil Vertebrate Tracks
While this investigator is aware of several track sites in the Uinta Formation, they are rare. Site 42DC177TIVP has several trackways of what appear to be tracks of large mammals (modern horse size) walking across a mudflat. The tracks are seen as round to oblong depressions in a two to three inch cherty limestone bed. They line up with alternating left and right patterns of fairly equal distance separating each depression. In the brief time these were viewed during the study, at least three trackways were observed. This site is of critical importance and warrants further study. The site also has gastropod shells, bird? bones, and a layer with plant stem impressions.

Summary and Recommendations

Most of the fossils identified in this survey are of the type and nature as to be little effected by development of the oil field. Much of the material is of poor or marginal quality in preservation.

Other than one jaw impression of a small mammal, no significant evidence of mammalian fossil bone material was found during the survey.

Fossils sites of plants and invertebrates usually extend over a wide area, several hundreds to thousands of square feet. Developments requiring ground disturbance can sometimes expose additional plant and invertebrate material for study if it is brought to the attention of a paleontologist. A number of plant sites were identified and these have the potential for providing some important information on the flora of the Uinta Formation.

***One exceptionally good plant location, 42DC176P, should be examined more closely and a collection of specimens made before any development occurs in that immediate area (SW/NW/SW/NW, SEC. 4, T9S, R16E). If development does take place in that immediate area, it should be monitored by a paleontologist. (See (A) - Areas of Avoidance Map, page 9.)

*****The most critical fossil site found during the survey was site 42DC177TIVP (bottom of SE1/4, NE/NW, SEC. 4, T9S, R16E). This site contains evidence of vertebrate (mammal) tracks, bird? bones, invertebrates, and plant fossils. <u>Construction and development on or immediately around this site should be avoided.</u> Development in the immediate area should be monitored by a paleontologist. (See (B) - Areas of Avoidance Map, page 9.)**

Other development and construction in the study area can proceed as planned or necessary. There is always some chance of encountering important fossil material when working in the Uinta Formation. If significant fossil material (identifiable plants, bones, tracks etc.) is encountered during development and construction projects, a paleontologist should be called to evaluate it.

Because of the amount of material (though of marginal quality) found during the survey, it recommended that perhaps an annual visit to sites of development and construction during the past year be visited by a paleontologist to see if any significant fossil material (mostly in the way of plant fossils) has been exposed. These could then be recorded and identifiable samples collected for study.

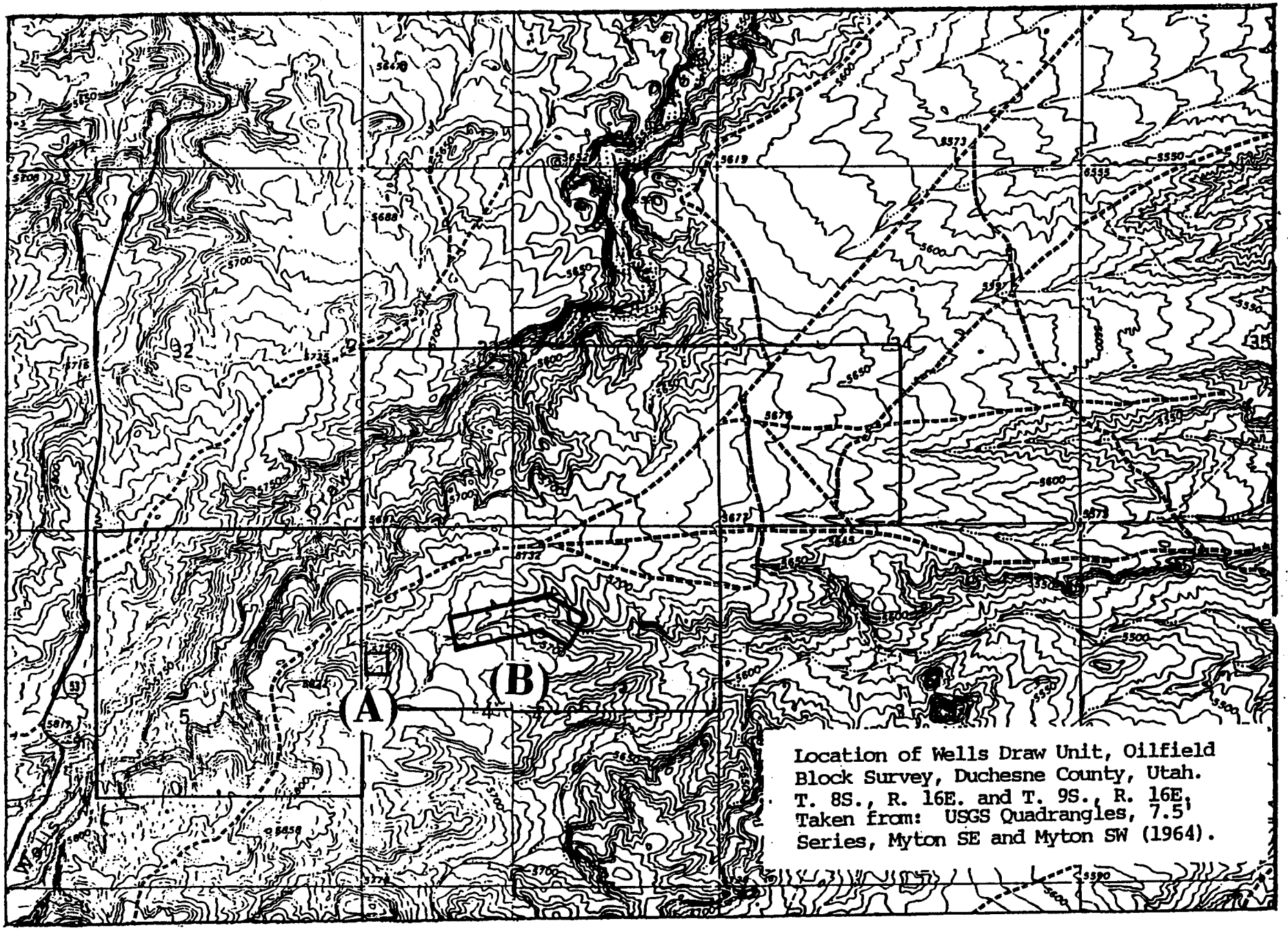

Figure 4. Areas of Avoidance Map.

SELECTED REFERENCES

Bryant, B., Naeser, C.W., Marvin, R.F., and Mehnert, H.H., 1989, Upper Cretaceous and Paleogene Sedimentary Rocks and Isotopic Ages of Paleogene Tuffs, Uinta Basin, Utah, U.S. Geological Survey Bulliten 1787-J,K.

Bryant, B., 1992, Geologic and structure maps of the Salt Lake City 1 X 2 quadrangle, Utah and Wyoming, U.S. Geological Survey, Map I-1997.

Hamblin, A. H., 1987, Paleogeography and paleoecology of the Myton Pocket, Uinta Basin, Utah (Uinta Formation - Upper Eocene): BYU Geology Studies vol. 34, no. 1, p. 33-60.

Hamblin, A. H., 1991, Paleontology report for the Cultural Resources Component of the Natural Buttes EA Study area. Uintah County, Utah.

Hamblin, A. H., 1992a, Technical Report No. 2, Desert Spring EA: Paleontological Resources: Duchesne and Uintah Counties, Utah.

Hamblin, A. H., 1992b, Supplementary Report to Technical Report No. 2, Desert Spring EA: Paleontological Resources: Duchesne and Uintah Counties, Utah.

Hamblin, A. H., 1992c, Paleontology Report on the Monument Butte EA Study Area, Duchesne County, Utah, for Mariah Associates, Larmie, Wyoming.

(For more complete references on the paleontology of the Uinta Formation, consult the Bibliographies of the references listed above.)

WORKSHEET
APPLICATION FOR PERMIT TO DRILL

APD RECEIVED: 12/20/1999

API NO. ASSIGNED: 43-013-32132

WELL NAME: WELLS DRAW 8-5-9-16
OPERATOR: INLAND PRODUCTION (N5160)
CONTACT: JON HOLST

PHONE NUMBER: 303-893-0102

PROPOSED LOCATION:
SENE 05 090S 160E
SURFACE: 1809 FNL 0588 FEL
BOTTOM: 1809 FNL 0588 FEL
DUCHESNE
MONUMENT BUTTE (105)

LEASE TYPE: 1-Federal
LEASE NUMBER: U-30096
SURFACE OWNER: 1-Federal

PROPOSED FORMATION: GRRV

INSPECT LOCATN BY: / /

Tech Review	Initials	Date
Engineering		
Geology		
Surface		

RECEIVED AND/OR REVIEWED:

✓ Plat
✓ Bond: Fed[1] Ind[] Sta[] Fee[]
(No. 4488944)
N Potash (Y/N)
N Oil Shale (Y/N) *190 - 5 (B)
✓ Water Permit
(No. MUNICIPAL *Johnson Wtr. District
N RDCC Review (Y/N)
(Date:)
N/A Fee Surf Agreement (Y/N)

LOCATION AND SITING:

R649-2-3. Unit Wells Draw (GR) Sec. Rec.
✓ R649-3-2. General
Siting: 460 f. Qtr/Qtr Boundary & 920 between wells.
R649-3-3. Exception
Drilling Unit
Board Cause No:
Eff Date:
Siting:
R649-3-11. Directional Drill

COMMENTS: * Monument Butte Field "Standard Operating Practices", separate file.

STIPULATIONS: (1) FEDERAL APPROVAL

Utah Oil Gas and Mining

Serving the Industry, Protecting the Environment

OPERATOR: INLAND PORDUCTION CO. (N5160)

FIELD: MONUMENT BUTTE (105)

SEC. 5, TWP 9 S, RNG 16 E

COUNTY: DUCHESNE UNIT: WELLS DRAW

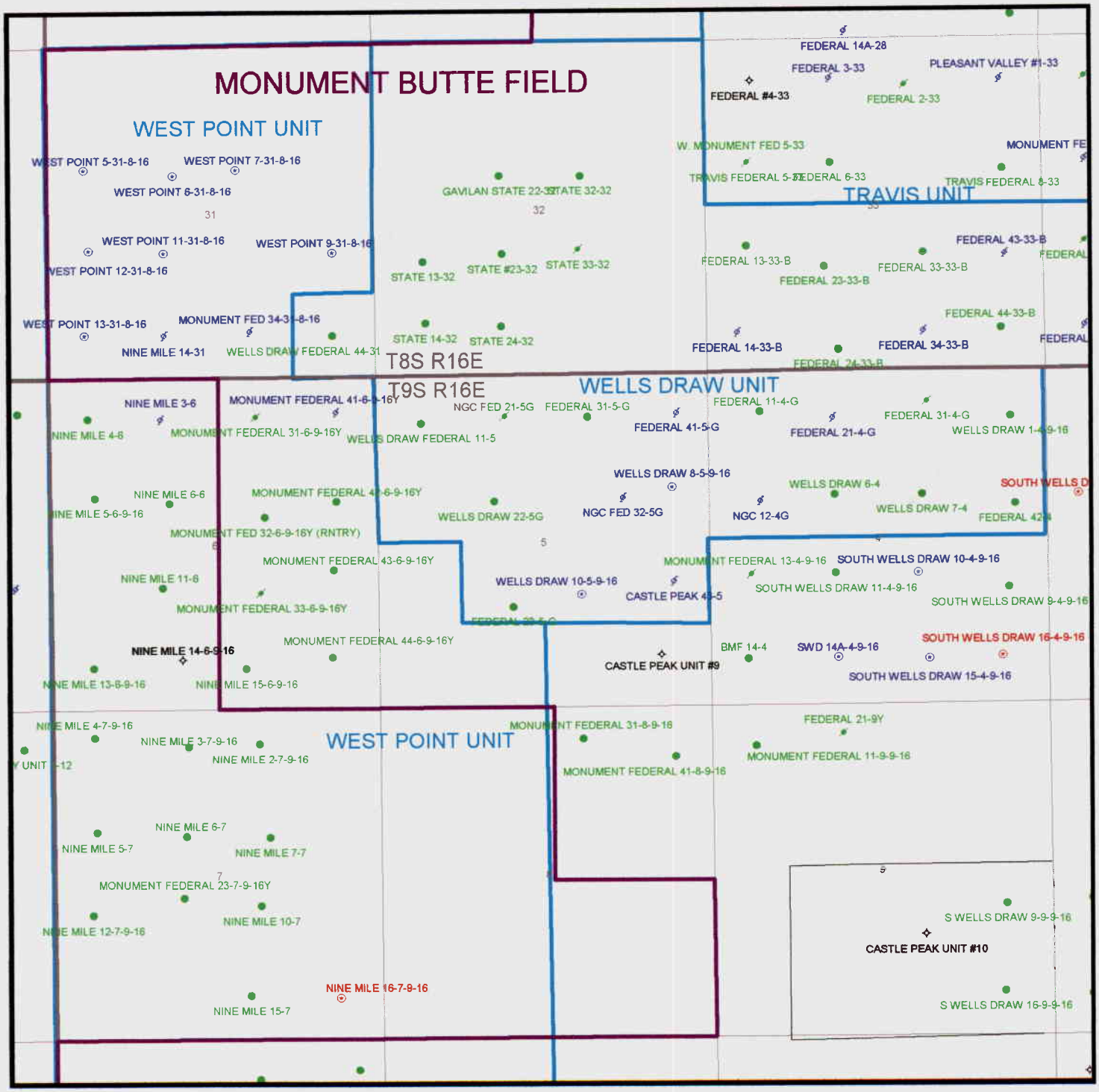

PREPARED
DATE: 23-DEC-1999

United States Department of the Interior

BUREAU OF LAND MANAGEMENT
Utah State Office
P.O. Box 45155
Salt Lake City, Utah 84145-0155

IN REPLY REFER TO:
3160
(UT-922)

January 3, 2000

Memorandum

To: Assistant District Manager Minerals, Vernal District

From: Michael Coulthard, Petroleum Engineer

Subject: 2000 Plan of Development Wells Draw Unit
Duchesne County, Utah.

Pursuant to email between Lisha Cordova, Division of Oil, Gas and Mining, and Mickey Coulthard, Utah State Office, Bureau of Land Management. The following wells are planned for calendar year 2000 within the Wells Draw Unit, Duchesne County, Utah.

API #	WELL NAME	LOCATION
43-013-32132	WELLS DRAW 8-5-9-16	1809-FNL 0588-FEL 05 09S 16E
43-013-32133	WELLS DRAW 10-5-9-16	1787-FSL 2034-FEL 05 09S 16E

This office has no objection to permitting the well at this time.

/s/ Michael L. Coulthard

bcc: File - Wells Draw Unit
Division of Oil Gas and Mining
Agr. Sec. Chron
Fluid Chron

MCoulthard:mc:1-3-0

State of Utah
DEPARTMENT OF NATURAL RESOURCES
DIVISION OF OIL, GAS AND MINING

Michael O. Leavitt
Governor
Kathleen Clarke
Executive Director
Lowell P. Braxton
Division Director

1594 West North Temple, Suite 1210
PO Box 145801
Salt Lake City, Utah 84114-5801
801-538-5340
801-359-3940 (Fax)
801-538-7223 (TDD)

January 10, 2000

Inland Production Company
410 17th Street Suite 700
Denver, CO. 80202

Re: Wells Draw 8-5-9-16 Well, 1809' FNL, 588' FEL, SE NE, Sec. 5, T. 9 S., R. 16 E., Duchesne County, Utah

Gentlemen:

Pursuant to the provisions and requirements of Utah Code Ann. 40-6-1 et seq., Utah Administrative Code R649-3-1 et seq., and the attached Conditions of Approval, approval to drill the referenced well is granted.

This approval shall expire one year from the above date unless substantial and continuous operation is underway, or a request for extension is made prior to the expiration date. The API identification number assigned to this well is 43-013-32132.

Sincerely,

John R. Baza
Associate Director

ecc
Enclosures
cc: Duchesne County Assessor
Bureau of Land Management, Vernal District Office

Operator: Inland Production Company
Well Name & Number: Wells Draw 8-5-9-16
API Number: 43-013-32132
Lease: Federal **Surface Owner:** Federal
Location: SE NE **Sec.** 5 **T.** 9 S. **R.** 16 E.

Conditions of Approval

1. General
   Compliance with the requirements of Utah Admin. R. 649-1 et seq., the Oil and Gas Conservation General Rules, and the applicable terms and provisions of the approved Application for Permit to Drill.

2. Notification Requirements
   Notify the Division within 24 hours of spudding the well. Contact Carol Daniels at (801)538-5284.

   Notify the Division prior to commencing operations to plug and abandon the well. Contact Dan Jarvis at (801) 538-5338 or Robert Krueger at (801) 538-5274.

3. Reporting Requirements
   All required reports, forms and submittals shall be promptly filed with the Division, including but not limited to the Entity Action Form (Form 6), Report of Water Encountered During Drilling (Form 7), Weekly Progress Reports for drilling and completion operations, and Sundry Notices and Reports on Wells requesting approval of change of plans or other operational actions.

4. State approval of this well does not supersede the required federal approval which must be obtained prior to drilling.

FORM 3160-3
(December 1990)

SUBMIT IN TRIPLICATE*
(Other instructions on reverse side)

Form approved.
Budget Bureau No. 1004-0136
Expires December 31, 1991

UNITED STATES
DEPARTMENT OF THE INTERIOR
BUREAU OF LAND MANAGEMENT

5. LEASE DESIGNATION AND SERIAL NO.
U-30096

6. IF INDIAN, ALOTTEE OR TRIBE NAME
N/A

APPLICATION FOR PERMIT TO DRILL, DEEPEN, OR PLUG BACK

1a. TYPE OF WORK DRILL [X] DEEPEN [ ]

1b. TYPE OF WELL
OIL WELL [X] GAS WELL [ ] OTHER [ ] SINGLE ZONE [ ] MULTIPLE ZONE [ ]

7. UNIT AGREEMENT NAME
WELLS DRAW UNIT

8. FARM OR LEASE NAME
WELLS DRAW UNIT

2. NAME OF OPERATOR
Inland Production Company

9. WELL NO.
WELLS DRAW 8-5-9-16

3. ADDRESS OF OPERATOR
410 - 17th Street, Suite 700, Denver, CO 80202 Phone: (303) 893-0102

10. FIELD AND POOL OR WILDCAT
MONUMENT BUTTE

4. LOCATION OF WELL (Report location clearly and in accordance with any State requirements.*)
At Surface SENE
At proposed Prod. Zone
587.7' FEL & 1809.4' FNL

11. SEC., T., R., M., OR BLK. AND SURVEY OR AREA
Sec. 5, T9S, R16E

14. DISTANCE IN MILES AND DIRECTION FROM NEAREST TOWN OR POST OFFICE*
Approximately 13.2 miles SW of Myton, Utah

12. County
Duchesne

13. STATE
UT

15. DISTANCE FROM PROPOSED* LOCATION TO NEAREST PROPERTY OR LEASE LINE, FT. (Also to nearest drlg. unit line, if any)
588

16. NO. OF ACRES IN LEASE
602

17. NO. OF ACRES ASSIGNED TO THIS WELL
40

18. DISTANCE FROM PROPOSED LOCATION* TO NEAREST WELL, DRILLING, COMPLETED, OR APPLIED FOR ON THIS LEASE, FT.

19. PROPOSED DEPTH
6500'

20. ROTARY OR CABLE TOOLS
Rotary

21. ELEVATIONS (Show whether DF, RT, GR, etc.)
5776.1 GR

22. APPROX. DATE WORK WILL START*
1st Quarter 2000

23. PROPOSED CASING AND CEMENTING PROGRAM

SIZE OF HOLE	SIZE OF CASING	WEIGHT/FOOT	SETTING DEPTH	QUANTITY OF CEMENT
Refer to Monument Butte Field SOP's Drilling Program/Casing Design				

Inland Production Company proposes to drill this well in accordance with the attached exhibits.

The Conditions of Approval are also attached.

RECEIVED
DEC 20 1999

IN ABOVE SPACE DESCRIBE PROPOSED PROGRAM : If proposal is to deepen or plug back, give data on present productive zone and proposed new productive zone.
If proposal is to drill or deepen directionally, give pertinent data on subsurface locations and measured and true vertical depths. Give blowout preventer program, if any.

24.
SIGNED Anita Shipman for Jon Holst TITLE Operations Sec'y DATE 12/17/99
Anita Shipman for Jon Holst, Counsel

(This space for Federal or State office use)

PERMIT NO. NOTICE OF APPROVAL APPROVAL DATE

Application approval does not warrant or certify that the applicant holds legal or equitable title to those rights in the subject lease which would entitle the applicant to conduct operations thereon.

CONDITIONS OF APPROVAL, IF ANY:

APPROVED BY Kirk R. Leavitt TITLE Assistant Field Manager Mineral Resources DATE 1/20/00

***See Instructions On Reverse Side**

Title 18 U.S.C. Section 1001, makes it a crime for any person knowingly and willfully to make to any department or agency of the United States any false, fictitious or fraudulent statements or representations as to any matter within its jurisdiction.

CONDITIONS OF APPROVAL
APPLICATION FOR PERMIT TO DRILL

Company/Operator: Inland Production Company

Well Name & Number: 8-5-9-16

API Number: 43-013-32132

Lease Number: U-30096

Location: SENE Sec. 05 T. 09S R. 16E

CONDITIONS OF APPROVAL FOR NOTICE TO DRILL

Approval of this application does not warrant or certify that the applicant holds legal or equitable title to those rights in the subject lease which would entitle the applicant to conduct operations thereon.

Be aware fire restrictions may be in effect when location is being constructed and/or when well is being drilled. Contact the appropriate Surface Management Agency for information.

Drilling Operations

As a minimum, the usable water shall be isolated and/or protected by having a cement top for the production casing at least 200 ft. above the base of the Usable Water identified at ± **1058 ft.**

SURFACE USE PROGRAM
Conditions of Approval (COA)

Location Reclamation

The following seed mixture will be used on the stock piled topsoil, reclamation of the reserve pit and for final reclamation: (All poundages are in Pure Live Seed)

needle and thread	Strip comata	3 lbs/acre
shadscale	Atriplex confertifolia	3 lbs/acre
galleta	Hilaria jamesii	3 lbs/acre
black sage	Artemesia arbuscula v. nova	3 lbs/acre

The location topsoil pile shall be seeded immediately after site construction by broadcasting the seed. then walking the topsoil pile with the dozer to plant the seed.

The reserve pit shall have a small amount of topsoil stock piled near by to be used to spread over the reserve pit area at the time the reserve pit is reclaimed.

At the time of final abandonment the location and access will be recontoured to natural topography and topsoil spread over the area and the surface seeded immediately. If the previously reclaimed surface of the reserve pit needs additional contouring, the topsoil over the pit will be scraped off and then used as additional topsoil for final reclamation.

DIVISION OF OIL, GAS AND MINING

SPUDDING INFORMATION

Name of Company: INLAND PRODUCTION COMPANY

Well Name: WELLS DRAW 8-5-9-16

Api No.. 43-013-32132 Lease Type: FEDERAL

Section 05 Township 09S Range 16E County DUCHESNE

Drilling Contractor UNION DRILLING RIG # 14

SPUDDED:

Date 03/21/2000

Time 11:00 AM

How ROTARY

Drilling will commence

Reported by PAT WISENER

Telephone # 1-435-823-7468

Date 03/22/2000 Signed: CHD

FORM 3160-5
(June 1990)

UNITED STATES
DEPARTMENT OF THE INTERIOR
BUREAU OF LAND MANAGEMENT

FORM APPROVED
Budget Bureau No. 1004-0135
Expires: March 31, 1993

SUNDRY NOTICES AND REPORTS ON WELLS

Do not use this form for proposals to drill or to deepen or reentry a different reservoir.
Use "APPLICATION FOR PERMIT -" for such proposals

SUBMIT IN TRIPLICATE

5. Lease Designation and Serial No.
U-30096

6. If Indian, Allottee or Tribe Name
NA

7. If Unit or CA, Agreement Designation
WELLS DRAW UNIT

1. Type of Well
[X] Oil Well [ ] Gas Well [ ] Other

8. Well Name and No.
Wells Draw 8-5-9-16

9. API Well No.
43-013-32132

2. Name of Operator
INLAND PRODUCTION COMPANY

10. Field and Pool, or Exploratory Area
MONUMENT BUTTE

3. Address and Telephone No.
Route 3 Box 3630 Myton, Utah 84052 435-646-3721

11. County or Parish, State
Duchesne County, UTAH

4. Location of Well (Footage, Sec., T., R., m., or Survey Description)
587.7' FEL & 1809.4' FN SE/NE
Sec. 5.T 9S R 16E

12. **CHECK APPROPRIATE BOX(s) TO INDICATE NATURE OF NOTICE, REPORT, OR OTHER DATA**

TYPE OF SUBMISSION	TYPE OF ACTION	
[ ] Notice of Intent	[ ] Abandonment	[ ] Change of Plans
[X] Subsequent Report	[ ] Recompletion	[ ] New Construction
[ ] Final Abandonment Notice	[ ] Plugging Back	[ ] Non-Routine Fracturing
	[ ] Casing Repair	[ ] Water Shut-Off
	[ ] Altering Casing	[ ] Conversion to Injection
	[X] Other **SPUD**	[ ] Dispose Water
		(Note: Report results of multiple completion on Well Completion or Recompletion Report and Log form.)

13. Describe Proposed or Completed Operations (Clearly state all pertinent details, and give pertinent dates, including estimated date of starting any proposed work. If well is directionally drilled, give subsurface locations and measured and true vertical depths for all markers and zones pertinent to this work.)*

MIRU UNION RIG # 14. Set equipment. Drill mouse hole & rat hole. Spud well @ 11:00 AM 3/21/00. Drill 17 1/4" hole and set 23' of 13 3/8" conductor. Nipple up cellar. Drill 12 1/4" hole with air mist to a depth of 341'. TIH w/ 8 5/8" J-55 csg. Landed @ 307.47'. Cement with *141sks class "G" w/ 2% CaCL2 & 1/4#/sk Cello-flake mixed @ 15.8ppg.>1.17 YLD. Estimated 5 bbls cement to surface. WOC 4 hours. Break out & Nipple up BOP's. Pressure test Kelly, TIW, Choke manifold, & BOP's TO 2000 psi. Test 8 5/8" CSG. TO 1500 PSI. ALL TESTED GOOD. Vernal District BLM & Utah DOGM notifed by phone. Drill 7 7/8" hole with water mist to a depth of 3811'. TOH and PU/MU Bit #4, MM, & BHA. Drill 7 7/8" hole to a depth of 4883'. with water based mud.

RECEIVED
MAR 28 2000
DIVISION OF
OIL, GAS AND MINING

14. I hereby certify that the foregoing is true and correct
Signed Pat Wisener Title Drilling Foreman Date 03/27/2000

(This space for Federal or State office use)
Approved by _____ Title _____ Date _____
Conditions of approval, if any:
CC: UTAH DOGM

Title 18 U.S.C. Section 1001, makes it a crime for any person knowingly and willfully to make to any department or agency of the United States any false, fictitious or fradulent statements or representations as to any matter within its jurisdiction.

Inland
PRODUCTION COMPANY
A Subsidiary of Inland Resources Inc.

March 27, 2000

State of Utah
Division of Oil, Gas & Mining
Attn: Carol Daniels
1594 West North Temple - Suite 1210
P.O. Box 145801
Salt Lake City, Utah 84114-5801

Dear Carol:

Please find enclosed Form 3160-5, for the Wells Draw 8-5-9-16. If you have any questions feel free to call me @ 435-823-7468 cell, or 435-646-3721 office any time.

Sincerely,

Pat Wisener

PAT WISENER
Drilling Foreman

Enclosures

pw

RECEIVED
MAR 28 2000
DIVISION OF
OIL, GAS AND MINING

Inland Production Company Field Office • Route 3, Box 3630 • Myton, UT 84052 • 435-646-3721 • FAX 435-646-3031
Corporate Office • 410 Seventeenth Street, Suite 700 • Denver, CO 80202 • 303-893-0102 • FAX 303-893-0103

STATE OF UTAH
DIVISION OF OIL, GAS AND MINING
ENTITY ACTION FORM -FORM 6

OPERATOR: INLAND PRODUCTION COMPANY
ADDRESS: RT. 3 BOX 3630
MYTON, UT 84052

OPERATOR ACCT. NO. N5160

ACTION CODE	CURRENT ENTITY NO	NEW ENTITY NO	API NUMBER	WELL NAME	WELL LOCATION QQ	SC	TP	RG	COUNTY	SPUD DATE	EFFECTIVE DATE
B	99999	12276	43-013-32132	Wells Draw #8-5-9-16	SENE	5	9S	16E	Duchesne	March 21, 2000	

WELL 1 COMMENTS: Union rig #14 spud at 11 AM Entity added 000321

ACTION CODE	CURRENT ENTITY NO	NEW ENTITY NO	API NUMBER	WELL NAME	WELL LOCATION QQ	SC	TP	RG	COUNTY	SPUD DATE	EFFECTIVE DATE

WELL 2 COMMENTS

ACTION CODE	CURRENT ENTITY NO	NEW ENTITY NO	API NUMBER	WELL NAME	WELL LOCATION QQ	SC	TP	RG	COUNTY	SPUD DATE	EFFECTIVE DATE

WELL 3 COMMENTS

ACTION CODE	CURRENT ENTITY NO	NEW ENTITY NO	API NUMBER	WELL NAME	WELL LOCATION QQ	SC	TP	RG	COUNTY	SPUD DATE	EFFECTIVE DATE

WELL 4 COMMENTS.

ACTION CODE	CURRENT ENTITY NO	NEW ENTITY NO	API NUMBER	WELL NAME	WELL LOCATION QQ	SC	TP	RG	COUNTY	SPUD DATE	EFFECTIVE DATE

WELL 5 COMMENTS:

ACTION CODES (See instructions on back of form)
- A - Establish new entity for new well (single well only)
- B - Add new well to existing entity (group or unit well)
- C - Re-assign well from one existing entity to another existing entity
- D - Re-assign well from one existing entity to a new entity
- E - Other (explain in comments section)

NOTE: Use COMMENT section to explain why each Action Code was selected

(3/89)

Signature

Sr. Production Accounting Clerk — March 22, 2000
Title — Date

Inland
PRODUCTION COMPANY
A Subsidiary of Inland Resources Inc.

April 3, 2000

State of Utah
Division of Oil, Gas & Mining
Attn: Carol Daniels
1594 West North Temple - Suite 1210
P.O. Box 145801
Salt Lake City, Utah 84114-5801

Dear Carol:

Please find enclosed Form 3160-5, for the Wells Draw 8-5-9-16. If you have any questions feel free to call me @ 435-823-7468 cell, or 435-646-3721 office any time.

Sincerely,

Pat Wisener

PAT WISENER
Drilling Foreman

Enclosures

pw

RECEIVED
APR 03 2000
DIVISION OF
OIL, GAS AND MINING

Inland Production Company Field Office • Route 3, Box 3630 • Myton, UT 84052 • 435-646-3721 • FAX 435-646-3031
Corporate Office • 410 Seventeenth Street, Suite 700 • Denver, CO 80202 • 303-893-0102 • FAX 303-893-0103

FORM 3160-5
(June 1990)

UNITED STATES
DEPARTMENT OF THE INTERIOR
BUREAU OF LAND MANAGEMENT

FORM APPROVED
Budget Bureau No. 1004-0135
Expires: March 31, 1993

SUNDRY NOTICES AND REPORTS ON WELLS

Do not use this form for proposals to drill or to deepen or reentry a different reservoir.
Use "APPLICATION FOR PERMIT -" for such proposals

5. Lease Designation and Serial No.
U-30096

6. If Indian, Allottee or Tribe Name
NA

7. If Unit or CA, Agreement Designation
WELLS DRAW UNIT

SUBMIT IN TRIPLICATE

1. Type of Well
[X] Oil Well [ ] Gas Well [ ] Other

8. Well Name and No.
Wells Draw 8-5-9-16

9. API Well No.
43-013-32132

2. Name of Operator
INLAND PRODUCTION COMPANY

10. Field and Pool, or Exploratory Area
MONUMENT BUTTE

3. Address and Telephone No.
Route 3 Box 3630 Myton, Utah 84052 435-646-3721

11. County or Parish, State
Duchesne County, UTAH

4. Location of Well (Footage, Sec., T., R., m., or Survey Description)
587.7' FEL & 1809.4' FN SE/NE
Sec. 5.T 9S R 16E

12. CHECK APPROPRIATE BOX(s) TO INDICATE NATURE OF NOTICE, REPORT, OR OTHER DATA

TYPE OF SUBMISSION	TYPE OF ACTION	
[ ] Notice of Intent	[ ] Abandonment	[ ] Change of Plans
[X] Subsequent Report	[ ] Recompletion	[ ] New Construction
[ ] Final Abandonment Notice	[ ] Plugging Back	[ ] Non-Routine Fracturing
	[ ] Casing Repair	[ ] Water Shut-Off
	[ ] Altering Casing	[ ] Conversion to Injection
	[X] Other Weekly Status	[ ] Dispose Water

(Note: Report results of multiple completion on Well Completion or Recompletion Report and Log form.)

13. Describe Proposed or Completed Operations (Clearly state all pertinent details, and give pertinent dates, including estimated date of starting any proposed work. If well is directionally drilled, give subsurface locations and measured and true vertical depths for all markers and zones pertinent to this work.)*

Continue to drill 7 7/8" hole with water based mud to a depth of 6014'. Lay down drill string & BHA. Open hole log. PU & MU 77 JT's of 15.5# J-55 CSG, 67 JT's of 17.0# J-55 CSG. **Set @ 5991.47 KB**. Cement w/ *265 sks PREM LITE ll w/ 10% Gel, & 3% KCL mixed to 11.0 ppg> 3.43 YLD. *400 sks 50/50 POZ w/ 2% Gel, & 3% KCL mixed to 14.4 ppg> 1.24 YLD. Good circulation. 33 sks cement circulated to pit. Bump plug @ 2520 psi. Plug down @ 1:38 pm on 3/28/00. Plug held. Drop slips w/ 67,000#. Nipple down BOP's & cellar. Clean Mud pits. Release rig @ 6:30 pm on 3/28/00.

Wait on completion.

RECEIVED
APR 03 2000
DIVISION OF
OIL, GAS AND MINING

14. I hereby certify that the foregoing is true and correct

Signed Pat Wisener Title Drilling Foreman Date 04/03/2000

(This space for Federal or State office use)

Approved by _____ Title _____ Date _____

Conditions of approval, if any:
CC: UTAH DOGM

Title 18 U.S.C. Section 1001, makes it a crime for any person knowingly and willfully to make to any department or agency of the United States any false, fictitious or fradulent statements or representations as to any matter within its jurisdiction.

INLAND PRODUCTION COMPANY - CASING & CEMENT REPORT

5 1/2" CASING SET AT 5991.47

LAST CASING 8 5/8" SET AT 307.47

DATUM 10' KB

DATUM TO CUT OFF CASING

DATUM TO BRADENHEAD FLANGE

TD DRILLER 5994' LOGGER'S TD 6014

HOLE SIZE 7 7/8'

OPERATOR INLAND PRODUCTION COMPANY

WELL Wells Draw 8-5-9-16

FIELD/PROSPECT NMB

CONTRACTOR & RIG # UNION RIG 14

LOG OF CASING STRING:

PIECES	OD	ITEM - MAKE - DESCRIPTION	WT / FT	GRD	THREAD	CONDT	LENGTH
		LANDING JT					12.4
67	5 1/2"	Maverick Used SC&T CSG	17	J-55	8rd	A	2733.1
76	5 1/2"	Maverick SC&T CSG	15.5	J-55	8rd	A	3212.26
		Float Collar (auto fill)			8rd	A	0.6
1	5 1/2"	Maverick SC&T CSG	15.5	J-55	8rd	A	34.86
		SHOE - GUIDE			8rd	A	0.65

CASING INVENTORY BAL.	FEET	JTS
TOTAL LENGTH OF STRING	5993.87	144
LESS NON CSG. ITEMS	13.65	
PLUS FULL JTS. LEFT OUT	75.39	2
TOTAL	6055.61	146
TOTAL CSG. DEL. (W/O THRDS)	6055.61	146
TIMING	1ST STAGE	2nd TRY
BEGIN RUN CSG.	1:30am	
CSG. IN HOLE	6:00am	
BEGIN CIRC	6:15am	12:25pm
BEGIN PUMP CMT	7:15am	12:33pm
BEGIN DSPL. CMT	8:15 AM	1:16pm
PLUG DOWN		1:38pm

TOTAL LENGTH OF STRING	5993.87
LESS CUT OFF PIECE	12.4
PLUS DATUM TO T/CUT OFF CSG	10
CASING SET DEPTH	**5991.47**

} COMPARE

GOOD CIRC THRU JOB YES

Bbls CMT CIRC TO SURFACE 20 bbls cement

RECIPROCATED PIPE FOR 15 mins THRU 6' FT STROKE

DID BACK PRES. VALVE HOLD ? yes

BUMPED PLUG TO 2520 PSI

CEMENT USED		CEMENT COMPANY- BJ
STAGE	# SX	CEMENT TYPE & ADDITIVES
1	265	Prem Lite II w/ 10% GEL & 3% KCL mixed to 11.0 ppg > 3.43 YLD
2	400	50/50 POZ w/ 2% GEL & 3% KCL mixed to 14.4 ppg > 1.24 YLD
3		

CENTRALIZER & SCRATCHER PLACEMENT	SHOW MAKE & SPACING
1 on middle of first JT, 1 collar of the second & third JT. Then every third for a total of 20.	

COMPANY REPRESENTATIVE PAT WISENER DATE 03/28/2000

Inland
PRODUCTION COMPANY
A Subsidiary of Inland Resources Inc.

April 24, 2000

State of Utah
Division of Oil, Gas & Mining
Attn: Carol Daniels
1594 West North Temple-Suite 1210
P. O. Box 145801
Salt Lake City, Utah 84114-5801

Dear Carol;

Please find enclosed Form 3160-5, for the Wells Draw 8-5-9-16. If you have any questions please call me at 435-823-4211 (CELL) or 435-646-3721 (OFFICE) any time.

Sincerely,

Gary Dietz
Completion Foreman

Enclosures

gd

RECEIVED
APR 25 2000
DIVISION OF
OIL, GAS AND MINING

Inland Production Company Field Office • Route 3, Box 3630 • Myton, UT 84052 • 435-646-3721 • FAX 435-646-3031
Corporate Office • 410 Seventeenth Street, Suite 700 • Denver, CO 80202 • 303-893-0102 • FAX 303-893-0103

FORM 3160-5
(June 1990)

UNITED STATES
DEPARTMENT OF THE INTERIOR
BUREAU OF LAND MANAGEMENT

FORM APPROVED
Budget Bureau No. 1004-0135
Expires: March 31, 1993

SUNDRY NOTICES AND REPORTS ON WELLS
Do not use this form for proposals to drill or to deepen or reentry a different reservoir.
Use "APPLICATION FOR PERMIT - -" for such proposals

SUBMIT IN TRIPLICATE

5. Lease Designation and Serial No.
U-30096

6. If Indian, Allottee or Tribe Name
NA

7. If Unit or CA, Agreement Designation
Wells Draw unit

1. Type of Well
[X] Oil Well [ ] Gas Well [ ] Other

8. Well Name and No.
Wells Draw 8-5-9-16

9. API Well No.
43-013-32132

2. Name of Operator
Inland Production Company

10. Field and Pool, or Exploratory Area
Monument Butte

3. Address and Telephone No.
Rout #3 Box 3630 Myton, Utah 84052 435-646-3721

11. County or Parish, State
Duchesne County Utah

4. Location of Well (Footage, Sec., T., R., m., or Survey Description)
587.7 FEL & 1809.4' FNL SE/NE Section ~~32~~ 5 T9S, R16E

12. CHECK APPROPRIATE BOX(s) TO INDICATE NATURE OF NOTICE, REPORT, OR OTHER DATA

TYPE OF SUBMISSION	TYPE OF ACTION	
[ ] Notice of Intent	[ ] Abandonment	[ ] Change of Plans
[X] Subsequent Report	[ ] Recompletion	[ ] New Construction
[ ] Final Abandonment Notice	[ ] Plugging Back	[ ] Non-Routine Fracturing
	[ ] Casing Repair	[ ] Water Shut-Off
	[ ] Altering Casing	[ ] Conversion to Injection
	[ ] Other **Status report**	[ ] Dispose Water

(Note: Report results of multiple completion on Well Completion or Recompletion Report and Log form.)

13. Describe Proposed or Completed Operations (Clearly state all pertinent details, and give pertinent dates, including estimated date of starting any proposed work. If well is directionally drilled, give subsurface locations and measured and true vertical depths for all markers and zones pertinent to this work.)*

Status report for time period 4/17/00 through 4/23/00.
Subject well had completion procedures initiated on 4/17/00. One Green River zone was perforated and hydraulically fractured. Sand was cleaned from wellbore. Zone was swab & flow tested to clean up sand. Production equipment was ran in well. Began producing on pump on 4/21/00.

RECEIVED
APR 25 2000
DIVISION OF
OIL, GAS AND MINING

14. I hereby certify that the foregoing is true and correct
Signed Gary Dietz Title **Completion Foreman** Date **24-Apr-00**

(This space for Federal or State office use)
Approved by _____ Title _____ Date _____
Conditions of approval, if any:
CC: Utah DOGM

Title 18 U.S.C. Section 1001, makes it a crime for any person knowingly and willfully to make to any department or agency of the United States any false, fictitious or fraudulent statements or representations as to any matter within its jurisdiction.

*See Instruction on Reverse Side

FORM 3160-4
(July 1992)

SUBMIT IN D\ CATE* (See other instructions ons reverse side)

FORM APPROVED
OMB NO. 1004-0137
Expires: February 28, 1995

UNITED STATES
DEPARTMENT OF THE INTERIOR
BUREAU OF LAND MANAGEMENT

WELL COMPLETION OR RECOMPLETION REPORT AND LOG*

5. LEASE DESIGNATION AND SERIAL NO.: U-30096

6. IF INDIAN, ALLOTTEE OR TRIBE NAME: N/A

7. UNIT AGREEMENT NAME: WELLS DRAW UNIT

8. FARM OR LEASE NAME, WELL NO.: WELLS DRAW UNIT 8-5-9-16

9. API WELL NO.: 43-013-32132

10. FIELD AND POOL OR WILDCAT: MONUMENT BUTTE

11. SEC., T., R., M., OR BLOCK AND SURVEY OR AREA: Section 5, T09S R16E

1a. TYPE OF WORK: OIL WELL [X] GAS WELL [ ] DRY [ ] Other

1b. TYPE OF WELL: NEW WELL [X] WORK OVER [ ] DEEPEN [ ] PLUG BACK [ ] DIFF RESVR. [ ] Other

2. NAME OF OPERATOR: INLAND RESOURCES INC.

3. ADDRESS AND TELEPHONE NO.: 410 17th St. Suite 700 Denver, CO 80202

4. LOCATION OF WELL (Report locations clearly and in accordance with any State requirements.*)
At Surface: SE/NE 587.7' FEL & 1809.4' FNL
At top prod. Interval reported below
At total depth

14. PERMIT NO.: 43-013-32132 DATE ISSUED: 01/20/00

12. COUNTY OR PARISH: DUCHESNE 13. STATE: UT

15. DATE SPUDDED	16. DATE T.D. REACHED	17. DATE COMPL. (Ready to prod.)	18. ELEVATIONS (DF, RKB, RT, GR, ETC.)*	19. ELEV. CASINGHEAD
03/21/00	03/27/00	04/21/00	5786.1' KB 5776.1' GR	

20. TOTAL DEPTH, MD & TVD	21. PLUG BACK T.D., MD & TVD	22. IF MULTIPLE COMPL., HOW MANY*	23. INTERVALS DRILLED BY	ROTARY TOOLS	CABLE TOOLS
6014'	5955'		------>	X	

24. PRODUCING INTERVAL(S), OF THIS COMPLETION--TOP, BOTTOM, NAME (MD AND TVD)*: Green River 4891' - 4924'

25. WAS DIRECTIONAL SURVEY MADE: No

26. TYPE ELECTRIC AND OTHER LOGS RUN: Rec. 3-30-00 DIGL/SP/~~GDL~~ CBL Rec. 4-19-00

27. WAS WELL CORED: No

23. CASING RECORD (Report all strings set in well)

CASING SIZE/GRADE	WEIGHT, LB./FT.	DEPTH SET (MD)	HOLE SIZE	TOP OF CEMENT, CEMENTING RECORD	AMOUNT PULLED
8-5/8	24#	307.7	12-1/4	141 sx Class "G"	
5-1/2	15.5#	5991.47	7-7/8	265 sx Premium Lite Modified	
				400 sx 50/50 POZ	

29. LINER RECORD

SIZE	TOP (MD)	BOTTOM (MD)	SACKS CEMENT*	SCREEN (MD)

30. TUBING RECORD

SIZE	DEPTH SET (MD)	PACKER SET (MD)
2-7/8	EOT @ 4969'	TA @ 4871'

31. PERFORATION RECORD (Interval, size and number)

INTERVAL	SIZE	NUMBER
4891' - 4924	2 SPF	62

32. ACID, SHOT, FRACTURE, CEMENT SQUEEZE, ETC.

DEPTH INTERVAL (MD)	AMOUNT AND KIND OF MATERIAL USED
	84,020# 20/40 SAND IN 479 BBLS SLICK WATER

33.* PRODUCTION

DATE FIRST PRODUCTION	PRODUCTION METHOD (Flowing, gas lift, pumping--size and type of pump)	WELL STATUS (Producing or shut-in)
04/21/00	2-1/2" x 1-1/2" x 16' RHAC Pump	PRODUCING

DATE OF TEST	HOURS TESTED	CHOKE SIZE	PROD'N. FOR TEST PERIOD	OIL--BBLS.	GAS--MCF.	WATER--BBL.	GAS-OIL RATIO
10 day ave	5/22/00		---->	80	96	15	1200

FLOW. TUBING PRESS.	CASING PRESSURE	CALCULATED 24-HOUR RATE	OIL-BBL.	GAS-MCF.	WATER--BBL.	OIL GRAVITY-API (CORR.)
		---->				

RECEIVED
JUN 0 2 2000
DIVISION OF
OIL, GAS AND MINING

34. DISPOSITION OF GAS (Sold, used for fuel, vented, etc.): Sold & Used for Fuel

TEST WITNESSED BY:

35. LIST OF ATTACHMENTS: Logs In Item #26

36. I hereby certify that the foregoing and attached information is complete and correct as determined from all available records.

SIGNED: Kevin W. Murphy TITLE: SR. OPERATIONS ENGINEER DATE: 5/30/00

*(See Instructions and Spaces for Additional Data on Reverse Side)

Title 18 U.S.C. Section 1001, makes it a crime for any person knowingly and willfully to make to any department or agency of the United States any false, fictitious or fraudulent statements or representations as to any matter within its jurisdiction.

37. SUMMARY OF POROUS ZONES: (Show all important zones of porosity and contents thereof; cored intervals, and all drill-stem, tests, including depth interval tested, cushion used, time tool open, flowing and shut-in pressures, and recoveries);

FORMATION	TOP	BOTTOM	DESCRIPTION, CONTENTS, ETC.
Garden Gulch Mkr	3862'		
Garden Gulch 2	4192'		
Point 3 Mkr	4464'		
X Mkr	4719'		
Y-Mkr	4752'		
Douglas Creek Mkr	4866'		
BiCarbonate Mkr	5110'		
B Limestone Mkr	5228'		
Castle Peak	5762'		
Basal Carbonate	NDE		
Total Depth (LOGGERS)	6014'		
WELLS DRAW 8-5-9-16			

38. GEOLOGIC MARKERS

NAME	TOP MEAS. DEPTH	TOP TRUE VERT. DEPTH

RECEIVED
JUN 0 2 2000
DIVISION OF
OIL, GAS AND MINING

FORM 3160-5
(June 1990)

UNITED STATES
DEPARTMENT OF THE INTERIOR
BUREAU OF LAND MANAGEMENT

FORM APPROVED
Budget Bureau No. 1004-0135
Expires: March 31, 1993

SUNDRY NOTICES AND REPORTS ON WELLS

Do not use this form for proposals to drill or to deepen or reentry a different reservoir.
Use "APPLICATION FOR PERMIT - -" for such proposals

SUBMIT IN TRIPLICATE

1. Type of Well
[X] Oil Well [ ] Gas Well [ ] Other

2. Name of Operator
Inland Production Company

3. Address and Telephone No.
Route #3 Box 3630 Myton, Utah 84052 435-646-3721

4. Location of Well (Footage, Sec., T., R., m., or Survey Description)
587.7' FEL & 1809.4' FNL SE/NE Section 5, T9S, R16E

5. Lease Designation and Serial No.
U-30096

6. If Indian, Allottee or Tribe Name
NA

7. If Unit or CA, Agreement Designation
Wells Draw Unit

8. Well Name and No.
Wells Draw Unit 8-5-9-16

9. API Well No.
43-013-32132

10. Field and Pool, or Exploratory Area
Monument Butte

11. County or Parish, State
Duchesne County, Utah

12. CHECK APPROPRIATE BOX(s) TO INDICATE NATURE OF NOTICE, REPORT, OR OTHER DATA

TYPE OF SUBMISSION	TYPE OF ACTION	
[ ] Notice of Intent	[ ] Abandonment	[ ] Change of Plans
[X] Subsequent Report	[ ] Recompletion	[ ] New Construction
[ ] Final Abandonment Notice	[ ] Plugging Back	[ ] Non-Routine Fracturing
	[ ] Casing Repair	[ ] Water Shut-Off
	[ ] Altering Casing	[ ] Conversion to Injection
	[X] Other **Status report**	[ ] Dispose Water

(Note: Report results of multiple completion on Well Completion or Recompletion Report and Log form.)

13. Describe Proposed or Completed Operations (Clearly state all pertinent details, and give pertinent dates, including estimated date of starting any proposed work. If well is directionally drilled, give subsurface locations and measured and true vertical depths for all markers and zones pertinent to this work.)*

Status report for time period 4/30/01 through 5/6/01.
Subject well had Recompletion procedures initiated on 4/30/01. Six new Green River intervals have been perforated (as follows); CP sds @ 5792-96' & 5852-60', LDC sds @ 5558-82', A sds @ 5334-44' & 5348-52', B/C sds @ 5046-54', 5068-87', 5124-28' & 5154-64', PB sds @ 4676-84' & GB sds @ 4336-60', 4442-50' & 4456-60'. All 4 JSPF. Two intervals have been fracture treated W/ 20/40 mesh sand. Remaining intervals await treatment at present time.

14. I hereby certify that the foregoing is true and correct
Signed Gary Dietz Title **Completion Foreman** Date **7-May-01**

(This space for Federal or State office use)
Approved by _____ Title _____ Date _____
Conditions of approval, if any:
CC: Utah DOGM

Title 18 U.S.C. Section 1001, makes it a crime for any person knowingly and willfully to make to any department or agency of the United States any false, fictitious or fraudulent statements or representations as to any matter within its jurisdiction.

*See Instruction on Reverse Side

RECEIVED
MAY 08 2001
DIVISION OF
OIL, GAS AND MINING

FORM 3160-5
(June 1990)

UNITED STATES
DEPARTMENT OF THE INTERIOR
BUREAU OF LAND MANAGEMENT

FORM APPROVED
Budget Bureau No. 1004-0135
Expires: March 31, 1993

SUNDRY NOTICES AND REPORTS ON WELLS
Do not use this form for proposals to drill or to deepen or reentry a different reservoir.
Use "APPLICATION FOR PERMIT - -" for such proposals

SUBMIT IN TRIPLICATE

5. Lease Designation and Serial No.
U-30096

6. If Indian, Allottee or Tribe Name
NA

7. If Unit or CA, Agreement Designation
Wells Draw Unit

1. Type of Well
[X] Oil Well [ ] Gas Well [ ] Other

8. Well Name and No.
Wells Draw Unit 8-5-9-16

9. API Well No.
43-013-32132

2. Name of Operator
Inland Production Company

10. Field and Pool, or Exploratory Area
Monument Butte

3. Address and Telephone No.
Route #3 Box 3630 Myton, Utah 84052 435-646-3721

11. County or Parish, State
Duchesne County, Utah

4. Location of Well (Footage, Sec., T., R., m., or Survey Description)
587.7' FEL & 1809.4' FNL SE/NE Section 5, T9S, R16E

12. CHECK APPROPRIATE BOX(s) TO INDICATE NATURE OF NOTICE, REPORT, OR OTHER DATA

TYPE OF SUBMISSION	TYPE OF ACTION	
[ ] Notice of Intent	[ ] Abandonment	[ ] Change of Plans
[X] Subsequent Report	[ ] Recompletion	[ ] New Construction
[ ] Final Abandonment Notice	[ ] Plugging Back	[ ] Non-Routine Fracturing
	[ ] Casing Repair	[ ] Water Shut-Off
	[ ] Altering Casing	[ ] Conversion to Injection
	[X] Other **Status report**	[ ] Dispose Water
		(Note: Report results of multiple completion on Well Completion or Recompletion Report and Log form.)

13. Describe Proposed or Completed Operations (Clearly state all pertinent details, and give pertinent dates, including estimated date of starting any proposed work. If well is directionally drilled, give subsurface locations and measured and true vertical depths for all markers and zones pertinent to this work.)*

Status report for time period 5/7/01 through 5/13/01.
Subject well had Recompletion procedures initiated on 4/30/01. Six new Green River intervals have been perforated (All 4 JSPF) and hydraulically fracture treated W/ 20/40 mesh sand (as follows); CP sds @ 5792-96' & 5852-60' (49,221# in 327 bbls Viking I-25 fluid), LDC sds @ 5558-82' (118,659# in 703 bbls Viking I-25 fluid), A sds @ 5334-44' & 5348-52' (68,020# in 425 bbls Viking I-25 fluid), B/C sds @ 5046-54', 5068-87', 5124-28' & 5154-64' (176,760# in 1037 bbls Viking I-25 fluid), PB sds @ 4676-84' (48,200# in 324 bbls Viking I-25 fluid) & GB sds @ 4336-60', 4442-50' & 4456-60' (152,820# in 1010 bbls Viking I-25 fluid). Bridge plugs and sand plugs were removed from wellbore. Zones are being swab tested for cleanup at present time.

14. I hereby certify that the foregoing is true and correct
Signed Gary Dietz Title **Completion Foreman** Date **14-May-01**

(This space for Federal or State office use)
Approved by _____ Title _____ Date _____
Conditions of approval, if any:
CC: Utah DOGM

Title 18 U.S.C. Section 1001, makes it a crime for any person knowingly and willfully to make to any department or agency of the United States any false, fictitious or fraudulent statements or representations as to any matter within its jurisdiction.

*See Instruction on Reverse Side

DIVISION OF
OIL, GAS AND MINING

FORM 3160-5
(June 1990)

UNITED STATES
DEPARTMENT OF THE INTERIOR
BUREAU OF LAND MANAGEMENT

FORM APPROVED
Budget Bureau No. 1004-0135
Expires: March 31, 1993

SUNDRY NOTICES AND REPORTS ON WELLS

Do not use this form for proposals to drill or to deepen or reentry a different reservoir.
Use "APPLICATION FOR PERMIT - -" for such proposals

SUBMIT IN TRIPLICATE

5. Lease Designation and Serial No.
U-30096

6. If Indian, Allottee or Tribe Name
NA

7. If Unit or CA, Agreement Designation
Wells Draw Unit

1. Type of Well
[X] Oil Well [ ] Gas Well [ ] Other

8. Well Name and No.
Wells Draw Unit 8-5-9-16

9. API Well No.
43-013-32132

2. Name of Operator
Inland Production Company

10. Field and Pool, or Exploratory Area
Monument Butte

3. Address and Telephone No.
Route #3 Box 3630 Myton, Utah 84052 435-646-3721

11. County or Parish, State
Duchesne County, Utah

4. Location of Well (Footage, Sec., T., R., m., or Survey Description)
587.7' FEL & 1809.4' FNL SE/NE Section 5, T9S, R16E

12. CHECK APPROPRIATE BOX(s) TO INDICATE NATURE OF NOTICE, REPORT, OR OTHER DATA

TYPE OF SUBMISSION	TYPE OF ACTION	
[ ] Notice of Intent	[ ] Abandonment	[ ] Change of Plans
[X] Subsequent Report	[ ] Recompletion	[ ] New Construction
[ ] Final Abandonment Notice	[ ] Plugging Back	[ ] Non-Routine Fracturing
	[ ] Casing Repair	[ ] Water Shut-Off
	[ ] Altering Casing	[ ] Conversion to Injection
	[X] Other **Status report**	[ ] Dispose Water
		(Note: Report results of multiple completion on Well Completion or Recompletion Report and Log form.)

13. Describe Proposed or Completed Operations (Clearly state all pertinent details, and give pertinent dates, including estimated date of starting any proposed work. If well is directionally drilled, give subsurface locations and measured and true vertical depths for all markers and zones pertinent to this work.)*

Status report for time period 5/14/01 through 5/20/01.
Subject well had Recompletion procedures initiated on 4/30/01. Six new Green River intervals have been perforated (All 4 JSPF) and hydraulically fracture treated W/ 20/40 mesh sand (as follows); CP sds @ 5792-96' & 5852-60' (49,221# in 327 bbls Viking I-25 fluid), LDC sds @ 5558-82' (118,659# in 703 bbls Viking I-25 fluid), A sds @ 5334-44' & 5348-52' (68,020# in 425 bbls Viking I-25 fluid), B/C sds @ 5046-54', 5068-87', 5124-28' & 5154-64' (176,760# in 1037 bbls Viking I-25 fluid), PB sds @ 4676-84' (48,200# in 324 bbls Viking I-25 fluid) & GB sds @ 4336-60', 4442-50' & 4456-60' (152,820# in 1010 bbls Viking I-25 fluid). Bridge plugs and sand plugs were removed from wellbore. Zones were swab tested for cleanup. Production equipment was ran in well. Well began producing on rod pump on 5/15/01.

RECEIVED
MAY 2 2 2001
DIVISION OF
OIL, GAS AND MINING

14. I hereby certify that the foregoing is true and correct
Signed Gary Dietz Title **Completion Foreman** Date **21-May-01**

(This space for Federal or State office use)
Approved by _____ Title _____ Date _____
Conditions of approval, if any:
CC: Utah DOGM

Title 18 U.S.C. Section 1001, makes it a crime for any person knowingly and willfully to make to any department or agency of the United States any false, fictitious or fraudulent statements or representations as to any matter within its jurisdiction.

*See Instruction on Reverse Side

United States Department of the Interior

BUREAU OF LAND MANAGEMENT
Utah State Office
P.O. Box 45155
Salt Lake City, UT 84145-0155
http://www.blm.gov

TAKE PRIDE IN AMERICA

IN REPLY REFER TO:
3106
(UT-924)

September 16, 2004

Memorandum

To: Vernal Field Office

From: Acting Chief, Branch of Fluid Minerals

Subject: Merger Approval

Attached is an approved copy of the name change recognized by the Utah State Office. We have updated our records to reflect the merger from Inland Production Company into Newfield Production Company on September 2, 2004.

Michael L Coulthard

Michael Coulthard
Acting Chief, Branch of
Fluid Minerals

Enclosure
1. State of Texas Certificate of Registration

cc: MMS, Reference Data Branch, James Sykes, PO Box 25165, Denver CO 80225
State of Utah, DOGM, Attn: Earlene Russell, PO Box 145801, SLC UT 84114
Teresa Thompson
Joe Incardine
Connie Seare

Corporations Section
P.O.Box 13697
Austin, Texas 78711-3697

Geoffrey S. Connor
Secretary of State

Office of the Secretary of State

The undersigned, as Secretary of State of Texas, does hereby certify that the attached is a true and correct copy of each document on file in this office as described below:

Newfield Production Company
Filing Number: 41530400

Articles of Amendment September 02, 2004

In testimony whereof, I have hereunto signed my name officially and caused to be impressed hereon the Seal of State at my office in Austin, Texas on September 10, 2004.

Secretary of State

ARTICLES OF AMENDMENT
TO THE
ARTICLES OF INCORPORATION
OF
INLAND PRODUCTION COMPANY

FILED
In the Office of the
Secretary of State of Texas

SEP 02 2004

Corporations Section

Pursuant to the provisions of Article 4.04 of the Texas Business Corporation Act (the "TBCA"), the undersigned corporation adopts the following articles of amendment to the articles of incorporation:

ARTICLE 1 – Name

The name of the corporation is Inland Production Company.

ARTICLE 2 – Amended Name

The following amendment to the Articles of Incorporation was approved by the Board of Directors and adopted by the shareholders of the corporation on August 27, 2004.

The amendment alters or changes Article One of the Articles of Incorporation to change the name of the corporation so that, as amended, Article One shall read in its entirety as follows:

"ARTICLE ONE – The name of the corporation is Newfield Production Company."

ARTICLE 3 – Effective Date of Filing

This document will become effective upon filing.

The holder of all of the shares outstanding and entitled to vote on said amendment has signed a consent in writing pursuant to Article 9.10 of the TBCA, adopting said amendment, and any written notice required has been given.

IN WITNESS WHEREOF, the undersigned corporation has executed these Articles of Amendment as of the 1st day of September, 2004.

INLAND RESOURCES INC.

By: Susan G. Riggs
Susan G. Riggs, Treasurer

UTSL-
071572A
065914

UTU-

02458
03563
03563A
04493
05843
07978
09803
017439B
017985
017991
017992
018073
019222
020252
020252A
020254
020255
020309D
022684A
027345
034217A
035521
035521A
038797
058149
063597A
075174
096547
096550

10760
11385
13905
15392
15855
16535
16539
16544
17036
17424
18048
18399
19267
26026A
30096
30103
31260
33992
34173
34346
36442
36846
38411
38428
38429
38431
39713
39714
40026
40652
40894
41377
44210
44426
44430
45431
47171
49092
49430
49950
50376
50385
50376
50750
51081
52013
52018
58546
61052
62848
63073B
63073D
63073E
63073O
64917
64379
64380
64381
64805
64806
64917
65207
65210
65635
65967
65969
65970
66184
66185
66191
67168
67170
67208
67549
67586
67845
68105
68548
68618
69060
69061
69744
70821
72103
72104
72105
72106
72107
72108
73086
73087
73807
73088
73089
73520A
74108
74805
74806
74807
74808
74389
74390
74391
74392
74393
74398
74399
74400
74404
74405
74406
74411
74805
74806
74826
74827
74835
74868
74869
74870
74872
74970
75036
75037
75038
75039
75075
75078
75089
75090
75234
75238
76239
76240
76241
76560
76561
76787
76808
76813
76954
76956
77233
77234
77235
77337
77338
77339
77357
77359
77365
77369
77370
77546
77553
77554
78022
79013
79014
79015
79016
79017
79831
79832
79833
79831
79834
80450
80915
81000

63073X
63098A
68528A
72086A
72613A
73520X
74477X
75023X
76189X
76331X
76788X
77098X
77107X
77236X
77376X
78560X
79485X
79641X
80207X
81307X

Division of Oil, Gas and Mining

OPERATOR CHANGE WORKSHEET

ROUTING
1. GLH
2. CDW
3. FILE

Change of Operator (Well Sold) — Designation of Agent/Operator

X Operator Name Change — **Merger**

The operator of the well(s) listed below has changed, effective: **9/1/2004**

FROM: (Old Operator):	**TO:** (New Operator):
N5160-Inland Production Company	N2695-Newfield Production Company
Route 3 Box 3630	Route 3 Box 3630
Myton, UT 84052	Myton, UT 84052
Phone: 1-(435) 646-3721	Phone: 1-(435) 646-3721

CA No. **Unit:** **Wells Draw (Green River)**

NAME	SEC	TWN	RNG	API NO	ENTITY NO	LEASE TYPE	WELL TYPE	WELL STATUS
WELLS DRAW 15-32-8-16	32	080S	160E	4301331676	12276	State	WI	A
WELLS DRAW 16-32-8-16	32	080S	160E	4301331817	12276	State	OW	P
WELLS DRAW 9-32-8-16	32	080S	160E	4301331819	12276	State	WI	A
WELLS DRAW 5-32-8-16	32	080S	160E	4301332218	12276	State	WI	A
WELLS DRAW 8-32-8-16	32	080S	160E	4301332219	12276	State	OW	P
FEDERAL 23-33-B	33	080S	160E	4301331251	12276	Federal	WI	A
FEDERAL 33-33-B	33	080S	160E	4301331268	12276	Federal	OW	P
FEDERAL 34-33-B	33	080S	160E	4301331269	12276	Federal	WI	A
FEDERAL 44-33-B	33	080S	160E	4301331270	12276	Federal	OW	P
FEDERAL 13-33-B	33	080S	160E	4301331277	12276	Federal	OW	P
FEDERAL 13-34-B	34	080S	160E	4301331271	12276	Federal	OW	P
FEDERAL 11-4-G	04	090S	160E	4301331250	12276	Federal	OW	P
FEDERAL 21-4-G	04	090S	160E	4301331272	12276	Federal	WI	A
WELLS DRAW 1-4-9-16	04	090S	160E	4301331971	12276	Federal	WI	A
WELLS DRAW 6-4	04	090S	160E	4301331972	12276	Federal	OW	P
WELLS DRAW 7-4	04	090S	160E	4301331973	12276	Federal	WI	A
FEDERAL 31-5-G	05	090S	160E	4301331252	12276	Federal	OW	S
WELLS DRAW 22-5G	05	090S	160E	4301331273	12276	Federal	OW	P
WELLS DRAW U 5-5-9-16	05	090S	160E	4301331759	12276	Federal	WI	A
WELLS DRAW 8-5-9-16	05	090S	160E	4301332132	12276	Federal	OW	P
WELLS DRAW 10-5-9-16	05	090S	160E	4301332133	12276	Federal	OW	P

OPERATOR CHANGES DOCUMENTATION

Enter date after each listed item is completed

1. (R649-8-10) Sundry or legal documentation was received from the **FORMER** operator on: 9/15/2004
2. (R649-8-10) Sundry or legal documentation was received from the **NEW** operator on: 9/15/2004
3. The new company was checked on the **Department of Commerce, Division of Corporations Database on:** 2/23/2005
4. Is the new operator registered in the State of Utah: YES Business Number: 755627-0143
5. If **NO**, the operator was contacted contacted on:

6a. (R649-9-2)Waste Management Plan has been received on: IN PLACE

6b. Inspections of LA PA state/fee well sites complete on: waived

7. **Federal and Indian Lease Wells:** The BLM and or the BIA has approved the merger, name change, or operator change for all wells listed on Federal or Indian leases on: BLM BIA

8. **Federal and Indian Units:**
The BLM or BIA has approved the successor of unit operator for wells listed on: n/a

9. **Federal and Indian Communization Agreements ("CA"):**
The BLM or BIA has approved the operator for all wells listed within a CA on: na/

10. **Underground Injection Control ("UIC")** The Division has approved UIC Form 5, **Transfer of Authority to Inject,** for the enhanced/secondary recovery unit/project for the water disposal well(s) listed on: 2/23/2005

DATA ENTRY:

1. Changes entered in the **Oil and Gas Database on:** 2/28/2005
2. Changes have been entered on the **Monthly Operator Change Spread Sheet on:** 2/28/2005
3. Bond information entered in RBDMS on: 2/28/2005
4. Fee/State wells attached to bond in RBDMS on: 2/28/2005
5. Injection Projects to new operator in RBDMS on: 2/28/2005
6. Receipt of Acceptance of Drilling Procedures for APD/New on: waived

FEDERAL WELL(S) BOND VERIFICATION:

1. Federal well(s) covered by Bond Number: UT 0056

INDIAN WELL(S) BOND VERIFICATION:

1. Indian well(s) covered by Bond Number: 61BSBDH2912

FEE & STATE WELL(S) BOND VERIFICATION:

1. (R649-3-1) The **NEW** operator of any fee well(s) listed covered by Bond Number 61BSBDH2919

2. The **FORMER** operator has requested a release of liability from their bond on: n/a*
The Division sent response by letter on: n/a

LEASE INTEREST OWNER NOTIFICATION:

3. (R649-2-10) The **FORMER** operator of the fee wells has been contacted and informed by a letter from the Division of their responsibility to notify all interest owners of this change on: n/a

COMMENTS:

*Bond rider changed operator name from Inland Production Company to Newfield Production Company - **received 2/23/05**

NEWFIELD
ROCKY MOUNTAINS

February 29, 2008

UIC-344.4

Mr. Dan Jarvis
State of Utah
Division of Oil, Gas and Mining
Post Office Box 145801
Salt Lake City, Utah 84114-5801

RE: Permit Application for Water Injection Well
Wells Draw #8-5-9-16
Monument Butte Field, Wells Draw Unit, Lease #UTU-30096
Section 5-Township 9S-Range 16E
Duchesne County, Utah

Dear Mr. Jarvis:

Newfield Production Company herein requests approval to convert the Wells Draw #8-5-9-16 from a producing oil well to a water injection well in the Monument Butte (Green River) Field.

I hope you find this application complete; however, if you have any questions or require additional information, please contact me at (303) 893-0102.

Sincerely,

Eric Sundberg
Regulatory Analyst

RECEIVED
MAR 07 2008
DIV. OF OIL, GAS & MINING

NEWFIELD PRODUCTION COMPANY

APPLICATION FOR APPROVAL OF CLASS II INJECTION WELL

WELLS DRAW #8-5-9-16

MONUMENT BUTTE FIELD (GREEN RIVER) FIELD

WELLS DRAW UNIT

LEASE #UTU-30096

FEBRUARY 29, 2008

RECEIVED
MAR 07 2008
DIV. OF OIL, GAS & MINING

TABLE OF CONTENTS

LETTER OF INTENT
COVER PAGE
TABLE OF CONTENTS
UIC FORM 1 – APPLICATION FOR INJECTION WELL
WELLBORE DIAGRAM OF PROPOSED INJECTION
WORK PROCEDURE FOR INJECTION CONVERSION
COMPLETED RULE R615-5-1 QUESTIONNAIRE
COMPLETED RULE R615-5-2 QUESTIONNAIRE

**ATTACHMENT A	ONE-HALF MILE RADIUS MAP
ATTACHMENT A-1	WELL LOCATION PLAT
ATTACHMENT B	LIST OF SURFACE OWNERS WITHIN ONE-HALF MILE RADIUS
ATTACHMENT C	CERTIFICATION FOR SURFACE OWNER NOTIFICATION
ATTACHMENT E	WELLBORE DIAGRAM – WELLS DRAW #8-5-9-16
ATTACHMENT E-1	WELLBORE DIAGRAM – WELLS DRAW #16-32-8-16
ATTACHMENT E-2	WELLBORE DIAGRAM – FEDERAL #14-33B
ATTACHMENT E-3	WELLBORE DIAGRAM – WELLS DRAW #31-5G-9-16
ATTACHMENT E-4	WELLBORE DIAGRAM – WELLS DRAW FEDERAL #41-5G-9-16
ATTACHMENT E-5	WELLBORE DIAGRAM – FEDERAL #11-4G-9-16
ATTACHMENT E-6	WELLBORE DIAGRAM – FEDERAL #21-4G
ATTACHMENT E-7	WELLBORE DIAGRAM – WELLS DRAW FEDERAL #G-4-9-16
ATTACHMENT E-8	WELLBORE DIAGRAM – NGC FEDERAL #32-5G
ATTACHMENT E-9	WELLBORE DIAGRAM – NGC #12-4G
ATTACHMENT E-10	WELLBORE DIAGRAM – WELLS DRAW #6-4-9-16
ATTACHMENT E-11	WELLBORE DIAGRAM – WELLS DRAW FEDERAL #M-5-9-16
ATTACHMENT E-12	WELLBORE DIAGRAM – WELLS DRAW #10-5-9-16
ATTACHMENT E-13	WELLBORE DIAGRAM – CASTLE PEAK FEDERAL #43-5-9-16
ATTACHMENT E-14	WELLBORE DIAGRAM – MONUMENT FEDERAL #13-4-9-16
ATTACHMENT E-15	WELLBORE DIAGRAM – CASTLE PEAK UNIT #9-5-9-16
ATTACHMENT E-16	WELLBORE DIAGRAM – SOUTH WELLS DRAW #16-5T-9-16
ATTACHMENT F	WATER ANALYSIS
ATTACHMENT G	FRACTURE GRADIENT CALCULATIONS
ATTACHMENT G-1	FRACTURE REPORTS DATED *4/19/00 & 5/2/01*
ATTACHMENT H	WORK PROCEDURE FOR PROPOSED PLUG AND ABANDON
ATTACHMENT H-1	WELLBORE DIAGRAM OF PROPOSED PLUGGED WELL

**The following wells located within the ½ mile radius, were not completed at the time of permit submission, therefore wellbore diagrams were not submitted:

WELLS DRAW FEDERAL #H-5-9-16
WELLS DRAW FEDERAL #I-5-9-16
WELLS DRAW FEDERAL #F-4-9-16
WELLS DRAW FEDERAL #X-33-8-16

STATE OF UTAH
DIVISION OF OIL, GAS AND MINING

APPLICATION FOR INJECTION WELL - UIC FORM 1

OPERATOR Newfield Production Company
ADDRESS 1401 17th Street, Suite 1000
Denver, Colorado 80202

Well Name and number: Wells Draw #8-5-9-16
Field or Unit name: Monument Butte (Green River), Wells Draw Unit Lease No. UTU-30096
Well Location: QQ SE/NE section 5 township 9S range 16E county Duchesne

Is this application for expansion of an existing project? ..... Yes [X] No [ ]
Will the proposed well be used for: Enhanced Recovery? ..... Yes [X] No [ ]
Disposal? ..... Yes [ ] No [X]
Storage? ..... Yes [ ] No [X]
Is this application for a new well to be drilled? ..... Yes [ ] No [X]
If this application is for an existing well,
has a casing test been performed on the well?..... Yes [ ] No [X]
Date of test:
API number: 43-013-32132

Proposed injection interval: from 4192 to 6014
Proposed maximum injection: rate 500 bpd pressure 1917 psig
Proposed injection zone contains [x] oil, [ ] gas, and/or [ ] fresh water within 1/2 mile of the well.

IMPORTANT: Additional information as required by R615-5-2 should accompany this form.

List of Attachments: Attachments "A" through "H-1"

I certify that this report is true and complete to the best of my knowledge.

Name: Eric Sundberg Signature
Title Regulatory Analyst Date 3/4/08
Phone No. (303) 893-0102

(State use only)
Application approved by Title
Approval Date

Comments:

Wells Draw #8-5-9-16

Spud Date: 3/21/00
Put on Production: 4/21/00
Re-completed: 5/1/01
GL: 5776' KB: 5786' 10' KB

Initial Production: 80 BOPD, 96 MCFD, 15 BWPD
Re-completion: 35.4 BOPD, 35 MCFG, 35 BWPD

SURFACE CASING

CSG SIZE: 8-5/8"
GRADE: J-55
WEIGHT: 24#
LENGTH: 7 JTS (309.87')
DEPTH LANDED: 307.47' KB
HOLE SIZE: 12-1/4"
CEMENT DATA: 141 sx Class "G" cmt.

PRODUCTION CASING

CSG SIZE: 5-1/2"
GRADE: J-55
WEIGHT: 17# and 15.5#
LENGTH: 144 jts (5993.87')
HOLE SIZE: 7-7/8"
SET AT: 5991.47' KB
CEMENT DATA: 265 sx Prem Lite II, 400 sx 50/50 Pozmix
CEMENT TOP AT: Above 200' per CBL

TUBING

SIZE/GRADE/WT: 2-7/8", J-55, 6.5#
NO. OF JOINTS: 184 jts. (5767.76')
TUBING ANCHOR: 5777.76' KB
NO. OF JOINTS: 2 jts. (62.88')
SEATING NIPPLE: 2-7/8", 1.10'
SN LANDED AT: 5843.44' KB
NO. OF JOINTS: 1 jt. (31.32')
TOTAL STRING LENGTH: 5876.31' KB

Proposed Injection
Wellbore Diagram

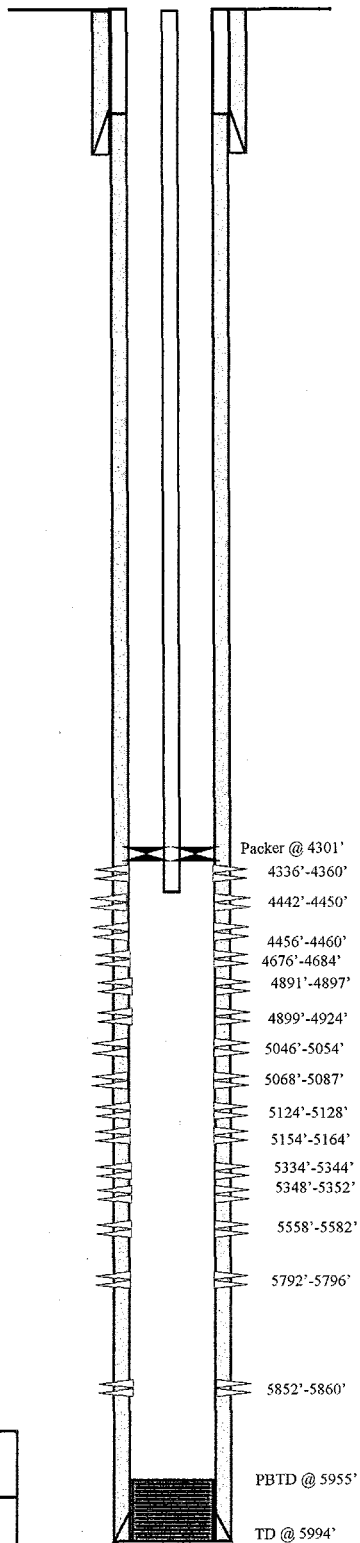

FRAC JOB

04/18/00	4891'-4924'	**Frac D sands as follows:** 84,020#'s 20/40 sand in 479 bbls Viking I-25 fluid. Treated @ avg press of 2300 psi w/ avg rate of 30 BPM. ISIP 2650 psi. Calc flush: 4889 gal. Actual flush: 4746 gal
05/03/01	5792'-5860'	**Frac CP1 and CP.5 sands as follows:** 49,221#'s 20/40 sand in 327 bbls Viking I-25 fluid. Treated @ avg press of 3450 psi with avg rate of 14 BPM. ISIP 2250 psi. Calc flush: 1526 gal. Actual flush: 1428 gal.
05/04/01	5558'-5582'	**Frac LDC sands as follows:** 118,659#'s 20/40 sand in 703 bbls Viking I-25 fluid. Treated @ avg press of 4460 psi w/avg rate of 15.2 BPM. ISIP 3030 psi. Calc flush: 1459 gal. Actual flush: 1344 gal.
05/05/01	5334'-5352'	**Frac A1 sands as follows:** 68,020#'s 20/40 sand in 425 bbls Viking I-25 fluid. Treated @ avg press of 3200 psi w/avg rate of 14.3 BPM. ISIP 2325 psi. Calc flush: 1401 gal. Actual flush: 1302 gal.
05/08/01	5046'-5164'	**Frac B1, B.5 &C sands as follows:** 176,760#'s 20/40 sand in 1037 bbls Viking I-25 fluid. Treated avg press of 4200 psi w/avg rate of 17.7 BPM. ISIP 1950 psi. Calc flush: 1338 gal. Actual flush: 1218 gal.
05/09/01	4676'-4684'	**Frac PB 11 sands as follows:** 48,200#'s 20/40 sand in 324 bbls Viking I-25 fluid. Treated avg press of 3500 psi w/avg rate of 16.2 BPM. ISIP 2230 psi. Calc flush: 1239 gal. Actual flush: 1134 gal.
05/10/01	4336'-4460'	**Frac GB6 and GB2 sands as follows:** 152,820#'s 20/40 sand in 1010 bbls Viking I-25 fluid. Treated avg press of 2000 psi w/avg rate of 30 BPM. ISIP 2230 psi. Calc flush: 4334 gal. Actual flush: 4263 gal.
10/09/01		Tubing leak. Update rod and tubing details.
07/30/02		Pump change. Update rod details.
09/11/02		Stuck plunger. Update rod details.
12/03/02		Pump change. Update rod details.
09/24/03		Parted rods. Update rod details.
03/01/04		Parted rods. Update rod details.
03/20/04		Stuck Pump. Bailed sand. Update rod and tubing details.
04/05/04		Tubing leak.
03/22/05		Parted rods. Update tubing detail.
05/17/05		Parted rods. Update rod detail.
08/14/06		Parted rods. Update rod and tubing details.

PERFORATION RECORD

4/18/00	4891'-4897'	2 JSPF	12 holes
4/18/00	4899'-4924'	2 JSPF	50 holes
5/01/01	5852'-5860'	4 JSPF	32 holes
5/01/01	5792'-5796'	4 JSPF	16 holes
5/01/01	5558'-5582'	4 JSPF	96 holes
5/01/01	5348'-5352'	4 JSPF	16 holes
5/01/01	5334'-5344'	4 JSPF	40 holes
5/01/01	5154'-5164'	4 JSPF	40 holes
5/01/01	5124'-5128'	4 JSPF	16 holes
5/01/01	5068'-5087'	4 JSPF	76 holes
5/01/01	5046'-5054'	4 JSPF	32 holes
5/01/01	4676'-4684'	4 JSPF	32 holes
5/01/01	4456'-4460'	4 JSPF	16 holes
5/01/01	4442'-4450'	4 JSPF	32 holes
5/01/01	4336'-4360'	4 JSPF	96 holes

NEWFIELD

Wells Draw #8-5-9-16

1809' FNL & 587' FEL

SE/NE Section 5-T9S-R16E

Duchesne Co, Utah

API #43-013-32132; Lease #UTU-30096

CT 2/28/08

WORK PROCEDURE FOR INJECTION CONVERSION

1. Rig up hot oil truck to casing. Pump water. Unseat pump. Flush rods. Trip out of hole with rods and pump.

2. Trip out of hole with tubing, breaking and doping every connection. Trip in hole with packer and tubing. Rig up water truck to casing. Pump packer fluid. Set packer.

3. Test casing and packer.

4. Rig down and move out.

REQUIREMENTS FOR INJECTION OF FLUIDS INTO RESERVOIRS
RULE R615-5-1

1. **Operations to increase ultimate recovery, such as cycling of gas, the maintenance of pressure, the introduction of gas, water or other substances into a reservoir for the purpose of secondary or other enhanced recovery or for storage and the injection of water into any formation for the purpose of water disposal shall be permitted only by order of the Board after notice and hearing.**

2. **A request for agency action for authority for the injection of gas, liquified petroleum gas, air, water or any other medium into any formation for any reason, including but not necessarily limited to the establishment of or the expansion of waterflood projects, enhanced recovery projects, and pressure maintenance projects shall contain:**

   2.1 **The name and address of the operator of the project.**

   Newfield Production Company
   1401 17th Street, Suite 1000
   Denver, Colorado 80202

   2.2 **A plat showing the area involved and identifying all wells, including all proposed injection wells, in the project area and within one-half mile of the project area.**

   See Attachment A.

   2.3 **A full description of the particular operation for approval is requested.**

   Approval is requested to convert the Wells Draw #8-5-9-16 from a producing oil well to a water injection well in Monument Butte (Green River) Field, Wells Draw Unit.

   2.4 **A description of the pools from which the identified wells are producing or have produced.**

   The proposed injection well will inject into the Green River Formation.

   2.5 **The names, description and depth of the pool or pools to be affected.**

   The injection zone is in the Green River Formation. For the Wells Draw #8-5-9-16 well, the proposed injection zone is from Garden Gulch to Basal Carbonate (4192' -5762'). The confining strata directly above and below the injection zones are the Garden Gulch and the top of the Wasatch Formation or TD, which ever is shallower. The Garden Gulch Marker top is at 3862' and the TD is at 6014'.

   2.6 **A copy of a log of a representative well completed in the pool.**

   The referenced log for the Wells Draw #8-5-9-16 is on file with the Utah Division of Oil, Gas and Mining.

2.7 A statement as to the type of fluid to be used for injection, its source and the estimated amounts to be injected daily.

The primary type and source of fluid to be used for injection will be culinary water commingled with produced water. The average estimated injection of fluids will be at a rate of 300 BPD, and the estimated maximum injection will be at a rate of 500 BPD.

2.8 A list of all operators and surface owners within one-half mile radius of the proposed project.

See Attachment B.

2.9 An affidavit certifying that said operators or owners and surface owners within a one-half mile radius have been provided a copy of the petition for injection.

See Attachment C.

2.10 Any additional information the Board may determine is necessary to adequately review the petition.

Newfield Production Company will supply any additional information requested by the Utah Division of Oil, Gas and Mining.

4.0 Establish recovery projects may be expanded and additional wells placed on injection only upon authority from the Board after notice and hearing or by administrative approval.

This proposed injection well is on a State lease (Lease #UTU-30096) in the Monument Butte Federal (Green River) Field, Wells Draw Unit, and this request is for administrative approval.

REQUIREMENTS FOR CLASS II INJECTION WELLS INCLUDING WATER DISPOSAL, STORAGE AND ENHANCED RECOVERY WELLS
SECTION V – RULE R615-5-2

1. **Injection well shall be completed, equipped, operated, and maintained in a manner that will prevent pollution and damage to any USDW, or other resources and will confine injected fluids to the interval approved.**

2. **The application for an injection well shall include a properly completed Form DOGM-UIC-1 and the following:**

   2.1 **A plat showing the location of the injection well, all abandoned or active wells within a one-half mile radius of the proposed wells, and the surface owner and the operator of any lands or producing leases, respectively, within a one-half mile radius of the proposed injection well.**

   See Attachments A and B.

   2.2 **Copies of electrical or radioactive logs, including gamma ray logs, for the proposed well run prior to the installation of casing and indicating resistivity, spontaneous potential, caliper and porosity.**

   All logs are on file with the Utah Division of Oil, Gas and Mining.

   2.3 **A copy of a cement bond or comparable log run for the proposed injection well after casing was set and cemented.**

   A copy of the cement bond log is on file with the Utah Division of Oil, Gas and Mining.

   2.4 **Copies of logs already on file with the Division should be referenced, but need not be refiled.**

   All copies of logs are on file with the Utah Division of Oil, Gas and Mining.

   2.5 **A description of the casing or proposed casing program of the injection well and of the proposed method for testing the casing before use of the well.**

   The casing program is 8-5/8", 24#, J-55 surface casing run to 307' KB, and 5-1/2", 17# & 15.5#, J-55 casing run from surface to 5991' KB. A casing integrity test will be conducted at the time of conversion. See Attachment E.

   2.6 **A statement as to the type of fluid to be used for injection, its source and estimated amounts to be injected daily.**

   The primary type and source of fluid to be used for injection will be culinary water commingled with produced water. The estimated average rate of injection will be 300 BPD, and the estimated maximum rate of injection will be 500 BPD.

   2.7 **Standard laboratory analysis of the fluid to be injected, the fluid in the formation into which the fluid is being injected, and the compatibility of the fluids.**

   See Attachment F.

The proposed average and maximum injection pressures.

The proposed average injection pressure will be approximately 1100 psig and the maximum injection pressure will not exceed 1917 psig.

2.8 Evidence and data to support a finding that the proposed injection well will not initiate fractures through the overlying strata or a confining interval that could enable the injected fluid or formation fluid to enter the fresh water strata.

The minimum fracture gradient for the Wells Draw #8-5-9-16, for existing perforations (4336' - 5860') calculates at 0.82 psig/ft. The maximum injection pressures will be limited so as not to exceed this gradient. A step rate test will be performed periodically to ensure we are below parting pressure. The proposed maximum injection pressure is 1917 psig. We may add additional perforations between 3862' and 6014'. See Attachments G and G-1.

2.9 Appropriate geological data on the injection interval and confining beds, including the geologic name, lithologic description, thickness, depth, and lateral extent.

In the Wells Draw #8-5-9-16, the proposed injection zone (4192' - 6014') is in the Garden Gulch to Basal Carbonate of the Green River Formation. The reservoir is a very fine-grained sandstone with minor imbedded shale streaks. The estimated porosity is 13%. The members are composed of porous and permeable lenticular calcareous sandstone and low porosity carbonates and calcareous shale. The porous and lenticular sandstone varies in thickness from 0-31' and is confined to the Monument Butte Federal Field. Outside the Monument Butte Federal Field, the sandstone is composed of tight, very fine, silty, calcareous sandstone, less than 3' thick. The stratum confining the injection zone is composed of tight, moderately calcareous, sandy lacustrine shale. All of the confining strata are impermeable, and will effectively seal off the oil, gas, and water of the injection zone from any strata directly above or below it.

2.10 A review of the mechanical condition of each well within a one-half mile radius of the proposed injection well to assure that no conduit exists that could enable fluids to migrate up or down the wellbore and enter the improper intervals.

See Attachments E through E-16.

Additionally, the injection system will be equipped with high and low pressure shut down devices that will automatically shut in injection waters if a system blockage or leakage occurs. One way check valves will also ensure proper flow management. Relief valves will also be utilized for high-pressure relief.

2.11 An affidavit certifying that a copy of the application has been provided to all operators or owners, and surface owners within a one-half mile radius of the proposed injection well.

See Attachment C.

2.12 Any other information that the Board or Division may determine is necessary to adequately review the application.

Newfield Production Company will supply any requested information to the Board or Division.

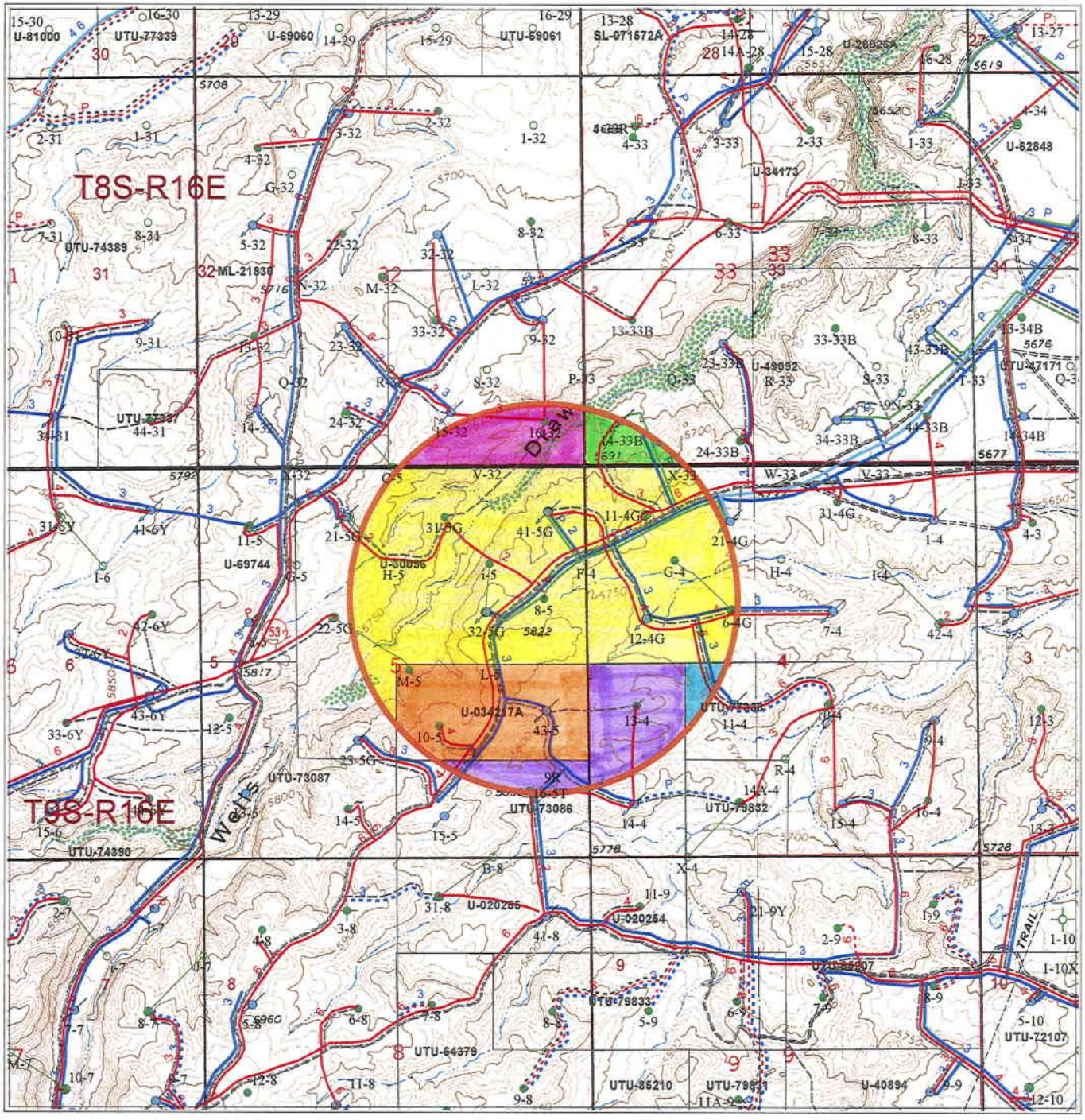

Well Status
- Location
- CTI
- Surface Spud
- Drilling
- Waiting on Completion
- Producing Oil Well
- Producing Gas Well
- Water Injection Well
- Dry Hole
- Temporarily Abandoned
- Plugged & Abandoned
- Shut In
- Countyline

Injection system
- high pressure
- low pressure
- proposed
- return
- return proposed

Gas Pipelines
- Gathering lines
- Proposed lines

- Leases
- 8-5-9-16 1/2mile radius

U-30096
U-34217A
U-73086
U-77338
ML-21836

Attachment A

Wells Draw 8-5-9-16
Section 5, T9S-R16E

NEWFIELD
ROCKY MOUNTAINS

N

1" = 2000'

1/2 Mile Radius Map
Duchesne County

Alamo Plaza Building
1401 17th Street Suite 1000
Denver, Colorado 80202-1247
Phone: (303) 893-0102

February 8, 2008

T9S, R16E, S.L.B.&M.

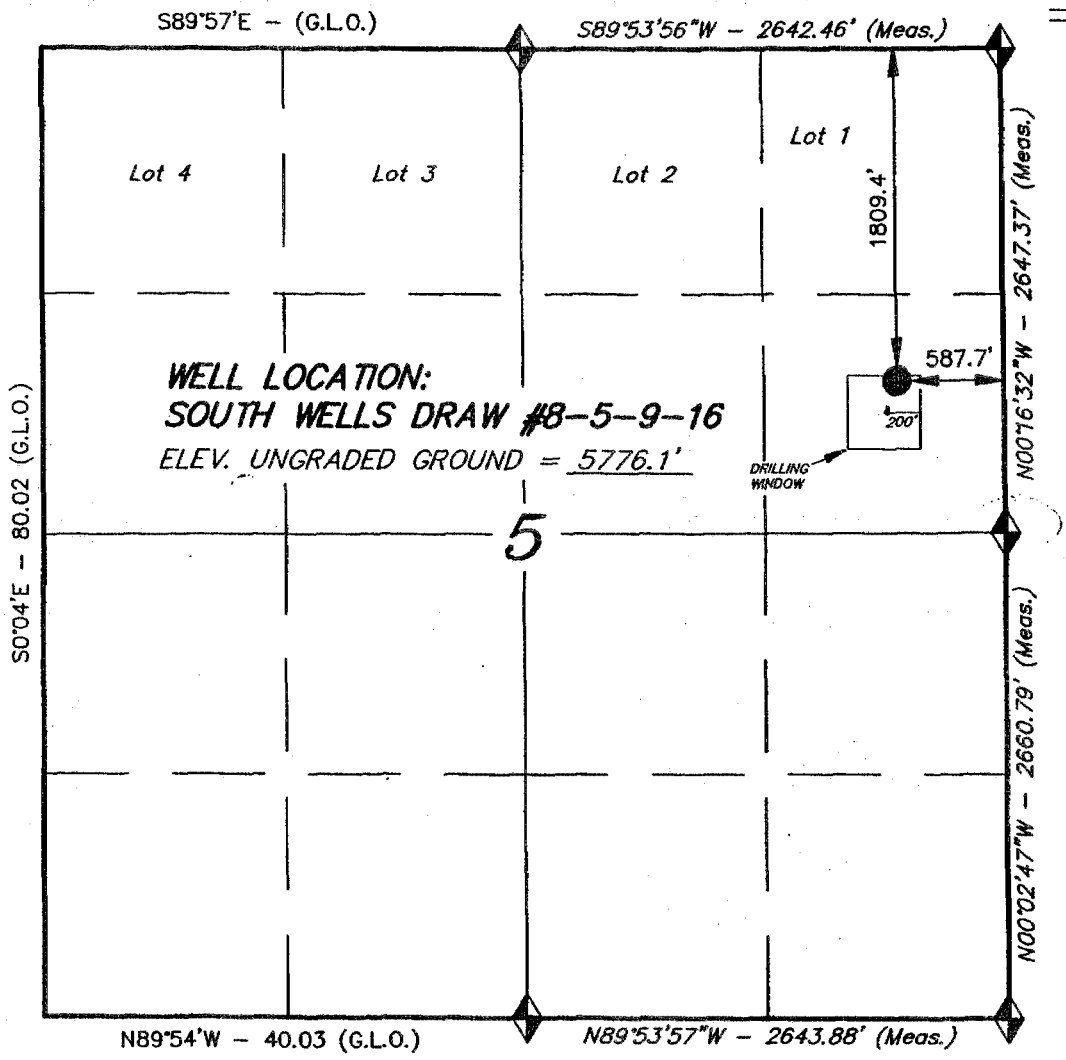

◆ = SECTION CORNERS LOCATED

BASIS OF ELEV; U.S.G.S. 7-1/2 min QUAD (MYTON SE)

BASIS OF BEARINGS IS A GLOBAL POSITIONING SATELITE OBSERVATION

INLAND PRODUCTION COMPANY

WELL LOCATION, SOUTH WELLS DRAW #8-5-9-16, LOCATED AS SHOWN IN THE SE 1/4 NE 1/4 OF SECTION 5, T9S, R16E, S.L.B.&M. DUCHESNE COUNTY, UTAH.

Attachment A-1

N

THIS IS TO CERTIFY THAT THE ABOVE PLAT WAS PREPARED FROM FIELD NOTES OF ACTUAL SURVEYS MADE BY ME OR UNDER MY SUPERVISION AND THAT THE SAME ARE TRUE AND CORRECT TO THE BEST OF MY KNOWLEDGE AND BELIEF.

LEVERNE STEWART
STATE OF UTAH

REGISTERED LAND SURVEYOR
REGISTRATION No. 144102
STATE OF UTAH

TRI STATE LAND SURVEYING & CONSULTING
38 WEST 100 NORTH – VERNAL, UTAH 84078
(801) 781-2501

SCALE: 1" = 1000'	SURVEYED BY: G.S. D.S.
DATE: 11-22-98	WEATHER: COOL
REVISIONS:	FILE #

EXHIBIT B

#	Land Description	Minerals Ownership & Expires	Minerals Leased By	Surface Rights
1	Township 9 South, Range 16 East Section 4: Lots 1-4, S2N2 Section 5: Lots 1-3, S2NE4, SENW, NESW	UTU-30096 HBP	Newfield Production Company	(Surface Rights) USA
2	Township 9 South, Range 16 East Section 5: N2SE	U-034217-A HBP	Newfield Production Company	(Surface Rights) USA
3	Township 9 South, Range 16 East Section 4: W2SW Section 5: S2SE	U-73086 HBP	Newfield Production Company	(Surface Rights) USA
4	Township 9 South, Range 16 East Section 3: Lots 3, 4, S2NW, SW Section 4: NESW, SE	U-77338 HBP	Newfield Production Company	(Surface Rights) USA
5	Township 8 South, Range 16 East Section 32: All	ML-21836 HBP	Newfield Production Company Producers Pipeline Corp. Gavilan Petroleum Inc. Dall Cook	(Surface Rights) St. of Utah

ATTACHMENT C

CERTIFICATION FOR SURFACE OWNER NOTIFICATION

RE: Application for Approval of Class II Injection Well
Wells Draw #8-5-9-16

I hereby certify that a copy of the injection application has been provided to all surface owners within a one-half mile radius of the proposed injection well.

Signed: _____
Newfield Production Company
Eric Sundberg
Regulatory Analyst

Sworn to and subscribed before me this 4th day of March, 2008.

Notary Public in and for the State of Colorado: Laurie Deseo

My Commission Expires: 05/05/2009

Attachment E

Wells Draw #8-5-9-16

Spud Date: 3/21/00
Put on Production: 4/21/00
Re-completed: 5/1/01
GL: 5776' KB: 5786' 10' KB

Initial Production: 80 BOPD, 96 MCFD, 15 BWPD
Re-completion: 35.4 BOPD, 35 MCFG, 35 BWPD

Wellbore Diagram

SURFACE CASING

CSG SIZE: 8-5/8"
GRADE: J-55
WEIGHT: 24#
LENGTH: 7 JTS (309.87')
DEPTH LANDED: 307.47' KB
HOLE SIZE: 12-1/4"
CEMENT DATA: 141 sx Class "G" cmt.

PRODUCTION CASING

CSG SIZE: 5-1/2"
GRADE: J-55
WEIGHT: 17# and 15.5#
LENGTH: 144 jts (5993.87')
HOLE SIZE: 7-7/8"
SET AT: 5991.47' KB
CEMENT DATA: 265 sx Prem Lite II, 400 sx 50/50 Pozmix
CEMENT TOP AT: Above 200' per CBL

TUBING

SIZE/GRADE/WT: 2-7/8", J-55, 6.5#
NO. OF JOINTS: 184 jts. (5767.76')
TUBING ANCHOR: 5777.76' KB
NO. OF JOINTS: 2 jts. (62.88')
SEATING NIPPLE: 2-7/8", 1.10'
SN LANDED AT: 5843.44' KB
NO. OF JOINTS: 1 jt. (31.32')
TOTAL STRING LENGTH: 5876.31' KB

SUCKER RODS

POLISHED ROD: 1 1/2" x 22' polished rod
SUCKER RODS: 116-- 7/8" scrapered rods, 91 - 3/4" plain rods, 20 - 3/4" scrapered rods, and 6 – 1 1/2" weight bars,.
PUMP SIZE: 2 1/2" x 1 3/4" x 12' x 16' RTBC Macgyver
STROKE LENGTH:"
PUMP SPEED, SPM: SPM

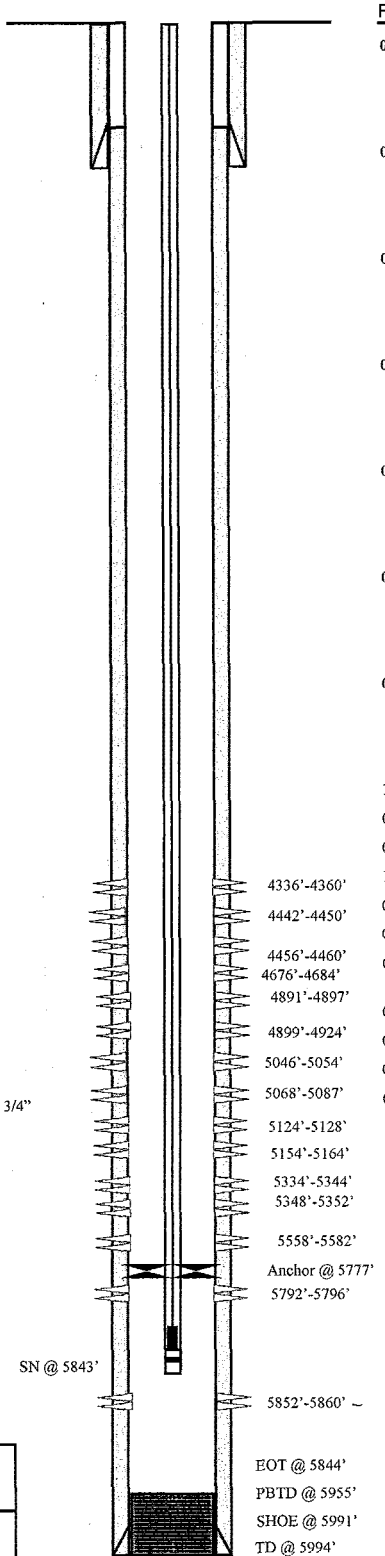

FRAC JOB

04/18/00	4891'-4924'	**Frac D sands as follows:** 84,020#'s 20/40 sand in 479 bbls Viking I-25 fluid. Treated @ avg press of 2300 psi w/ avg rate of 30 BPM. ISIP 2650 psi. Calc flush: 4889 gal. Actual flush: 4746 gal
05/03/01	5792'-5860'	**Frac CP1 and CP.5 sands as follows:** 49,221#'s 20/40 sand in 327 bbls Viking I-25 fluid. Treated @ avg press of 3450 psi with avg rate of 14 BPM. ISIP 2250 psi. Calc flush: 1526 gal. Actual flush: 1428 gal.
05/04/01	5558'-5582'	**Frac LDC sands as follows:** 118,659#'s 20/40 sand in 703 bbls Viking I-25 fluid. Treated @ avg press of 4460 psi w/avg rate of 15.2 BPM. ISIP 3030 psi. Calc flush: 1459 gal. Actual flush: 1344 gal.
05/05/01	5334'-5352'	**Frac A1 sands as follows:** 68,020#'s 20/40 sand in 425 bbls Viking I-25 fluid. Treated @ avg press of 3200 psi w/avg rate of 14.3 BPM. ISIP 2325 psi. Calc flush: 1401 gal. Actual flush: 1302 gal.
05/08/01	5046'-5164'	**Frac B1, B.5 &C sands as follows:** 176,760#'s 20/40 sand in 1037 bbls Viking I-25 fluid. Treated avg press of 4200 psi w/avg rate of 17.7 BPM. ISIP 1950 psi. Calc flush: 1338 gal. Actual flush: 1218 gal.
05/09/01	4676'-4684'	**Frac PB 11 sands as follows:** 48,200#'s 20/40 sand in 324 bbls Viking I-25 fluid. Treated avg press of 3500 psi w/avg rate of 16.2 BPM. ISIP 2230 psi. Calc flush: 1239 gal. Actual flush: 1134 gal.
05/10/01	4336'-4460'	**Frac GB6 and GB2 sands as follows:** 152,820#'s 20/40 sand in 1010 bbls Viking I-25 fluid. Treated avg press of 2000 psi w/avg rate of 30 BPM. ISIP 2230 psi. Calc flush: 4334 gal. Actual flush: 4263 gal.
10/09/01		Tubing leak. Update rod and tubing details.
07/30/02		Pump change. Update rod details.
09/11/02		Stuck plunger. Update rod details.
12/03/02		Pump change. Update rod details.
09/24/03		Parted rods. Update rod details.
03/01/04		Parted rods. Update rod details.
03/20/04		Stuck Pump. Bailed sand. Update rod and tubing details.
04/05/04		Tubing leak.
03/22/05		Parted rods. Update tubing detail.
05/17/05		Parted rods. Update rod detail.
08/14/06		Parted rods. Update rod and tubing details.

PERFORATION RECORD

4/18/00	4891'-4897'	2 JSPF	12 holes
4/18/00	4899'-4924'	2 JSPF	50 holes
5/01/01	5852'-5860'	4 JSPF	32 holes
5/01/01	5792'-5796'	4 JSPF	16 holes
5/01/01	5558'-5582'	4 JSPF	96 holes
5/01/01	5348'-5352'	4 JSPF	16 holes
5/01/01	5334'-5344'	4 JSPF	40 holes
5/01/01	5154'-5164'	4 JSPF	40 holes
5/01/01	5124'-5128'	4 JSPF	16 holes
5/01/01	5068'-5087'	4 JSPF	76 holes
5/01/01	5046'-5054'	4 JSPF	32 holes
5/01/01	4676'-4684'	4 JSPF	32 holes
5/01/01	4456'-4460'	4 JSPF	16 holes
5/01/01	4442'-4450'	4 JSPF	32 holes
5/01/01	4336'-4360'	4 JSPF	96 holes

NEWFIELD

Wells Draw #8-5-9-16

1809' FNL & 587' FEL

SE/NE Section 5-T9S-R16E

Duchesne Co, Utah

API #43-013-32132; Lease #UTU-30096

CB 10/09/06

Attachment E-1

Wells Draw #16-32-8-16

Spud Date: 4/14/2000
Put on Production: 5/19/2000
GL: 5663' KB: 5673'

IP: 121 BOPD, 383 MCFD, 30 BWPD

Wellbore Diagram

SURFACE CASING

CSG SIZE: 8-5/8"
GRADE: J-55
WEIGHT: 24#
LENGTH: 7 jts. (312.87')
DEPTH LANDED: 301'
HOLE SIZE: 12-1/4"
CEMENT DATA: 161 sxs Class "G" cmt.

PRODUCTION CASING

CSG SIZE: 5-1/2"
GRADE: J-55
WEIGHT: 15.5#
LENGTH: 140 jts. (5943.94')
DEPTH LANDED: 5941.54'
HOLE SIZE: 7-7/8"
CEMENT DATA: 265 sk Prem. Lite II mixed & 400 sxs 50/50 POZ.
CEMENT TOP AT: Surface per CBL

TUBING

SIZE/GRADE/WT.: 2-7/8"
NO. OF JOINTS: 183 jts (5744.58')
TUBING ANCHOR: 5754.58' (2.80)
NO. OF JOINTS: 1 jt (31.21')
SEATING NIPPLE: 2-7/8"
SN LANDED AT: 5788.59' (1.10)
NO. OF JOINTS: 2 jts (62.53')
TOTAL STRING LENGTH: EOT @ 5852.67'

SUCKER RODS

POLISHED ROD: 1-1/2" x 22'
SUCKER RODS: 2-8', 1-2' x ¾" pony rods, 88-3/4" scrapered rods, 88-3/4" plain rods, 50- ¾" scrapered rods, 4-1 ½" weight rods
PUMP SIZE: 2- ½" x 1- ¾" x 16' RHAC
STROKE LENGTH: 120"
PUMP SPEED, SPM: 5

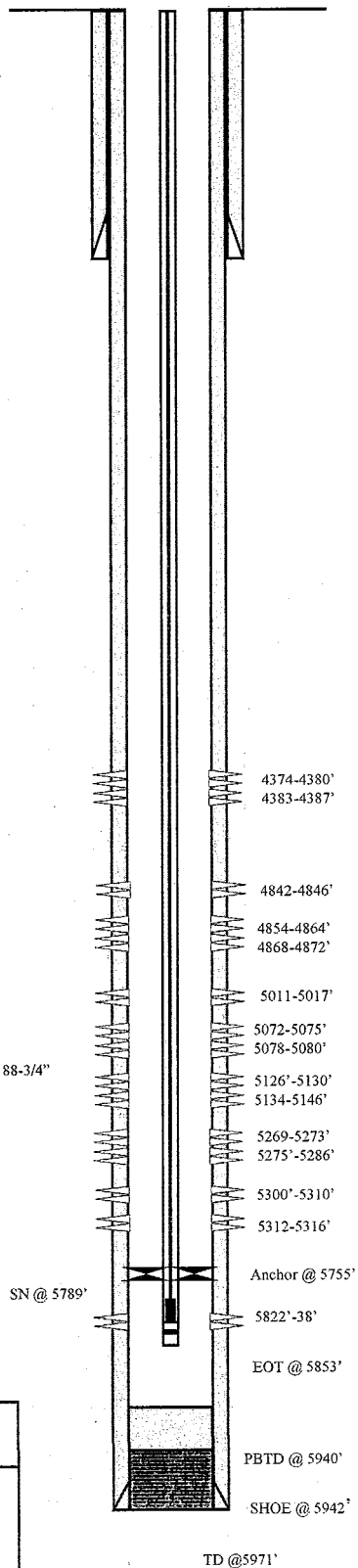

FRAC JOB

5/11/00	5822'-838'	**Frac CP sand as follows:** 74,500# 20/40 sand in 453 bbls Viking I-25 fluid. Perfs broke @ 3733 psi. Treated @ avg pressure of 2300 psi with avg rate of 28.3 BPM. ISIP 2625 psi; 5 min 2360 psi. Left pressure on well.
5/11/00	5269'-316'	**Frac A sand as follows:** 83,500# 20/40 sand in 472 bbls Viking I-25 fluid. Perfs broke @ 3943 psi. Treated @ avg pressure of 2050 psi with avg rate of 28.3 BPM. ISIP 2230 psi; 5 min 2144 psi. Flowed back on 12/64" choke for 3 hrs & died. Rec 107 BTF.
5/12/00	5011'-146'	**Frac C/B sand as follows:** 105,000# 20/40 sand in 578 bbls Viking I-25 fluid. Perfs broke @ 1805 psi. Treated at avg pressure of 1900 psi @ avg rate of 35.3 BPM. ISIP 2490 psi; 5 min 2435 psi. Left pressure on well.
5/13/00	4842'-872'	**Frac D sand as follows:** 77,000# 20/40 sand in 467 bb;ls Viking I-25 fluid. Perfs broke @ 1960 psi. Treated @ avg pressure of 2000 psi with avg rate of 27.5 BPM. ISIP 2330 psi; 5 min 2260 psi. Left pressure on well.
5/13/00	4374'-387'	Frac GB sand as follows: 60,500# 20/40 sand in 384 bbls Viking I-25 fluid. Perfs broke @ 4120 psi. Treated @ avg pressure of 2250 psi @ avg rate of 27.5 BPM. ISIP 2570 psi; 5 min 2506 psi. Flow back on 12/64" choke for 3-1/2 hrs & died. Rec 128 BTF.
4/12/04		Pump change. Update rod and tubing details.
1/4/05		Tubing leak. Update rod and tubing details.
2/14/07		**Tubing Leak.** Rod & Tubing detail updated.
7/17/07		Parted Rods. Updated rod & tubing detail.

PERFORATION RECORD

5/13/00	4374'-80'	4 JSPF	24 holes
5/13/00	4383'-87'	4 JSPF	16 holes
5/13/00	4842'-46'	2 JSPF	8 holes
5/13/00	4854'-64'	2 JSPF	20 holes
5/13/00	4868'-72'	2 JSPF	8 holes
5/12/00	5011'-17'	2 JSPF	12 holes
5/12/00	5072'-75'	2 JSPF	6 holes
5/12/00	5078'-80'	2 JSPF	4 holes
5/12/00	5126'-30'	2 JSPF	8 holes
5/12/00	5134'-46'	2 JSPF	24 holes
5/11/00	5269'-73'	2 JSPF	8 holes
5/11/00	5275'-86'	2 JSPF	22 holes
5/11/00	5300'-10'	2 JSPF	20 holes
5/11/00	5312'-16'	2 JSPF	8 holes
5/11/00	5822'-38'	4 JSPF	64 holes

NEWFIELD

Wells Draw #16-32-8-16

601 FSL 544 FEL
SE/SE Section 32-T8S-R16E
Duchesne Co, Utah
API #43-013-31817; Lease #ML21836

DS 8/8/07

Attachment E-2

Federal #14-33B

Wellbore Diagram

Spud Date: 6-7-89
Put on Production: 9-6-89
GL: 5651' KB: 5663'

Initial Production: 300 BOPD, 200 MCFD
92 BWPD

SURFACE CASING

CSG SIZE: 9-5/8"
GRADE: K-55
WEIGHT: 36#
LENGTH: ?
DEPTH LANDED: 300'
HOLE SIZE: 12-1/4"
CEMENT DATA: 225 skx Class "G"cmt, est ? bbls to surface

PRODUCTION CASING

CSG SIZE: 5-1/2"
GRADE: K-55, N-80
WEIGHT: 17#
LENGTH: ?
HOLE SIZE: 7-7/8"
CEMENT DATA: 521 sks Hi-Lift & 502 Class "G"
CEMENT TOP AT: 700'
SET AT: 6398'

TUBING

SIZE/GRADE/WT: 2-7/8", J-55, 6.5#
NO. OF JOINTS: ? jts
TUBING ANCHOR: 4791'
SEATING NIPPLE: 2-7/8"
TOTAL STRING LENGTH: ?
SN LANDED AT: ?'

SUCKER RODS

POLISHED ROD:
SUCKER RODS:
TOTAL ROD STRING LENGTH:
PUMP NUMBER:
PUMP SIZE:
STROKE LENGTH:
PUMP SPEED, SPM:
LOGS: DLL-Micro, CDL-DSN, CBL-Variable Density

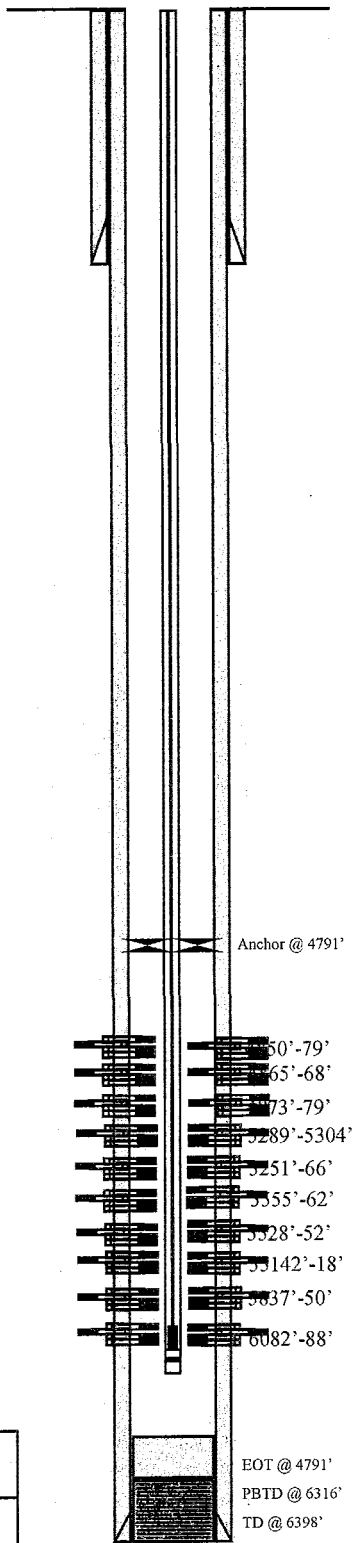

FRAC JOB

7-31-89	6082'-6088'	35,750# 20/40 sand, 21,450# 16/30 sand, 719 bbls.
8-1-89	5837'-5850'	42,250# 20/40 sand, 25,350# 16/30 sand, 761 bbls. Avg rate of 37 BPM. ISIP-2000 psi, 15 min 1770 psi.
8-4-89	5514'-5562'	81,250# sand, 48,750# 16/30 sand, 1462 gals. Avg rate of 45 BPM. ISIP-2400 psi, 15 min 2250 psi.
8-10-89	5251'-5304'	65,000# 20/40 sand, 35,000# 16/30 sand, and 1175 bbls. Avg rate of 45 BPM w/avg press of 2400 psi. ISIP-2200 psi. 15 min 1850 psi.
8-13-89	4850'-4879'	48,750# 20/40 sand, 21,250# 16/30 sand, 862 bbls. ISIP-2400 psi., 15 min 1500 psi. Avg rate of 42 BPM.

PERFORATION RECORD

7-30-89	6082'-6088'	4 JSPF	24 holes
8-1-88	5837'-5850'	4 JSPF	52 holes
8-3-88	5514'-5518'	4 JSPF	16 holes
8-3-88	5528'-5552'	4 JSPF	96 holes
8-3-88	5555'-5562'	4 JSPF	28 holes
8-8-88	5251'-5266'	4 JSPF	60 holes
8-8-88	5289'-5304'	4 JSPF	60 holes
8-13-88	4850'-4862'	4 JSPF	48 holes
8-13-88	4865'-4868'	4 JSPF	12 holes
8-13-88	4873'-4879'	4 JSPF	24 holes

Inland Resources Inc.

Federal #14-33B

500 FWL 600 FSL

SWSW Section 33-T8S-R16E

Duchesne Co, Utah

API #43-013-31229; Lease #U-49092

Attachment E-3

Wells Draw #31-5G-9-16

Spud Date: 1/15/90
Put on Production: 4/7/90
GL: 5701' KB: 5713'

Initial Production: 100 BOPD, 0 MCFD
100 BWPD

Wellbore Diagram

SURFACE CASING

CSG SIZE: 8-5/8" surface
GRADE: J-55
WEIGHT: 24#
LENGTH: 8 jts (321')
DEPTH LANDED: 332'
HOLE SIZE: 12-1/4"
CEMENT DATA: 225 sxs Class "G", 2% $CaCl_2$, 1/4#/sx cello flake

PRODUCTION CASING

CSG SIZE: 5-1/2"
GRADE: K-55
WEIGHT: 17#
LENGTH: 155 jts. (6390')
DEPTH LANDED: 6388'
HOLE SIZE: 7-7/8"
CEMENT DATA: 318 sxs DS Hi Lift. Tail w/535 sxs DS 10-0 RFC
CEMENT TOP AT: ?

TUBING

SIZE/GRADE/WT: 2-7/8", J-55, 6.5#
NO. OF JOINTS: 191 jts (6004.07')
TUBING ANCHOR: 6015.07'
NO. OF JOINTS: 2 jts (62.42')
SEATING NIPPLE: 2-7/8"
SN LANDED AT: 6080.29'
NO. OF JOINTS: 1 jt (31.35')
TOTAL STRING LENGTH: EOT 6113.19'

SUCKER RODS

POLISHED ROD: 1 1/2" x 22'
SUCKER RODS: 1-2' x 7/8" pony rods, 91-7/8" scrapered rods, 104-3/4" plain rods, 40-3/4" scrapered rods, 6-1 1/2" weight bars,
PUMP SIZE: 2 1/2" x 1 1/2" x 4' x 7' RTBC CDI PUMP
STROKE LENGTH: 86"
PUMP SPEED, SPM: 4 SPM

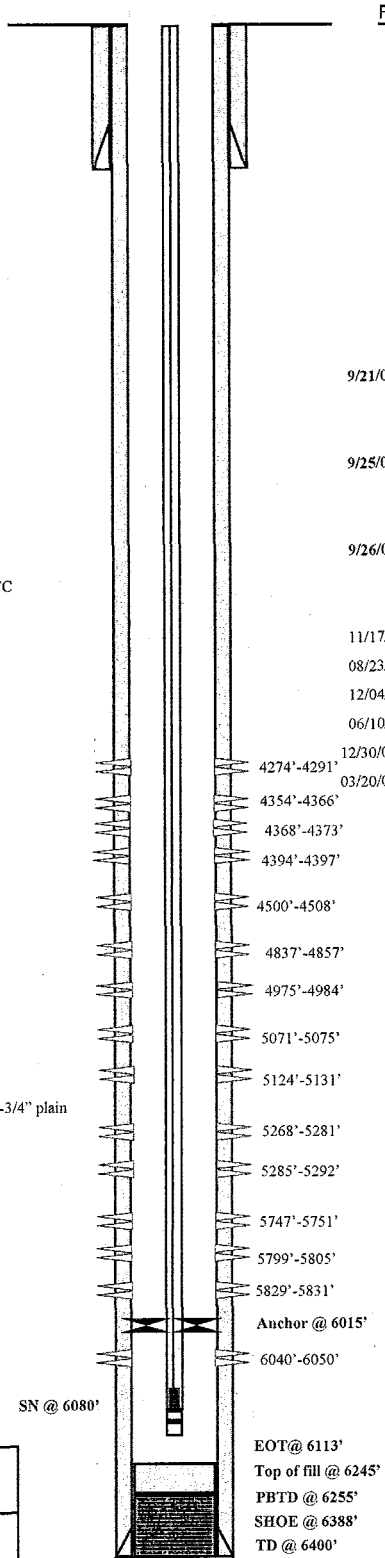

FRAC JOB

	4274'-4291'	35,100# 20/40 sand, 41,000# 16/30 sand, 844 bbls fluid @ avg 42 BPM @ 2200, ISIP 2430 psi.
	4500'-4508'	24,100# 20/40 sand, 34,600 16/30 sand, 641 bbls fluid @ avg 35 BPM @ 2500, ISIP 2750 psi.
	4837'-4857'	52,500# 20/40 sand, 15,000# 16/30 sand, cut job short 1045 bbls fluid, @ avg 45 BPM @ 2400, ISIP 2250 psi.
	4975'-4984'	32,230@ 20/40 sand, 35,770 16/30 sand, 784 bbls fluid @ avg 42 BPM @ 2300 psi , screened off 1/2 flush.
	5268'-5292'	57,500# 20/40 sand, 69,000# 16/30 sand, 1270 bbls fluid, @ avg 45 BPM @ 1900#, ISIP 2050 psi.
	6040'-6050'	32,300# 20/40 sand, 42,500 #16/30 sand, 858 bbls fluid, @ avg 35 BPM @ 1950, ISIP 2150 psi.
9/21/01	6040'-6050'	**Frac CP sands as follows:** 54,500# 20/40 sand in 355 bbls. Viking I-25 Frac fluid. Treated at avg. pressure of 4285 psi @ 19.8 BPM. ISIP 2540 psi.
9/25/01	5071'-5131'	**Frac B sands as follows:** 52,000# 20/40 sand in 351 bbls. Viking I-25 Frac fluid. Treated at avg. pressure of 3360 psi @ 16.6 BPM. ISIP 2220 psi.
9/26/01	4354'-4397'	**Frac GB-6 sands as follows:** 79,000# 20/40 sand in 521 bbls. Viking I-25 Frac fluid. Treated at avg. pressure of 2950 psi @ 18.8 BPM. ISIP 2360 psi.
11/17/01		Stuck pump. Update top of fill depth.
08/23/02		Pump change. Update rod details.
12/04/02		Pump change. Update rod details.
06/10/05		Parted rods. Update rod detail.
12/30/05		Pump change. Update rod and tubing details.
03/20/06		Acidize perfs. Update rod and tubing details.

PERFORATION RECORD

	4274'-4291'	4 SPF	68 Holes
	4500'-4508'	4 SPF	32 Holes
	4837'-4857'	4 SPF	80 Holes
	4975'-4984'	4 SPF	36 Holes
	5268'-5281	4 SPF	52 Holes
	5285'-5292'	4 SPF	28 Holes
	6040'-6050'	4 SPF	40 Holes
9/20/01	5829'-5831'	4 SPF	08 Holes
9/20/01	5799'-5805'	4 SPF	24 Holes
9/20/01	5747'-5751'	4 SPF	16 Holes
9/20/01	5124'-5131'	4 SPF	28 Holes
9/20/01	5071'-5075'	4 SPF	16 Holes
9/20/01	4394'-4397'	4 SPF	12 Holes
9/20/01	4368'-4373'	4 SPF	20 Holes
9/20/01	4354'-4366'	4 SPF	48 Holes

NEWFIELD

Federal #31-5G-9-16

685' FNL & 1925' FEL

NW/NE Section 5-T9S-R16E

Duchesne Co, Utah

API #43-013-31252; Lease #UTU-30096

CB 10/13/06

Attachment E-4

Wells Draw Fed. #41-5G-9-16

Spud Date: 3/24/1988
Put on Production: 5/5/1988
Put on injection: 1/12/1995
GL: 5134' KB: 5124'

Initial Production: 30 BOPD, 0 MCFD, 33 BWPD

Injection

Wellbore Diagram

SURFACE CASING

CSG SIZE: 9 5/8"
GRADE: L-80
WEIGHT: 43.5#
LENGTH: 7 jts.
DEPTH LANDED: 289'
HOLE SIZE:12 1/4"
CEMENT DATA: 165 sxs Class "G" cmt, est 14 bbls cmt to surface.

PRODUCTION CASING

CSG SIZE: 5 1/2"
GRADE: N-80
WEIGHT: 17#, 20#, 23#
LENGTH: 192 jts. (6023')
DEPTH LANDED: 6038'
HOLE SIZE: 7-7/8"
CEMENT DATA: 602 sxs Class "G" cement.
CEMENT TOP AT: 1630' per CBL

TUBING

SIZE/GRADE/WT: 2 7/8" / J-55 / 6.5# Internally coated Ceramcote 54
NO. OF JOINTS: 140 jts (4320.21')
SEATING NIPPLE: 2 7/8" (1.10')
SN LANDED AT: 4335.21'' KB
TUBING PACKER: 4336.31''
END OF TUBING: 4343.66'

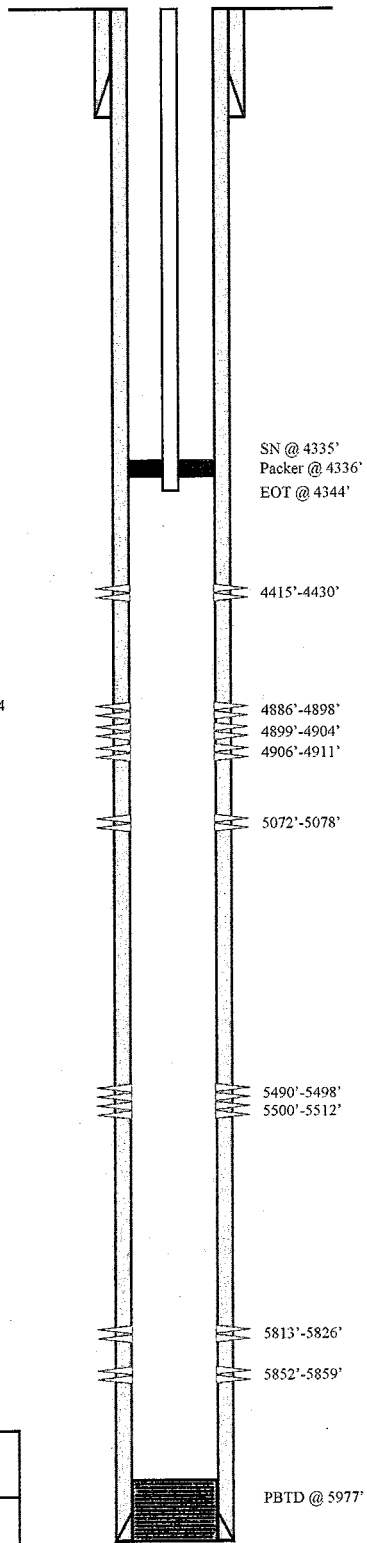

FRAC JOB

4/14/88	5813'-5859'	**Frac zone as follows:** 78,000# 20/40 sand in 866 bbls fluid. Treated @ avg press of 2000 psi w/avg rate of 35 BPM. ISIP 1870 psi.
4/17/88	5490'-5512'	**Frac zone as follows:** 92,500# 20/40 sand in 863 bbls fluid. Treated @ avg press of 2200 psi w/avg rate of 35 BPM. ISIP 2300 psi.
4/19/88	4886'-4911'	**Frac zone as follows:** 85,480# 20/40 sand in 1051 bbls fluid. Treated @ avg press of 1900 psi w/avg rate of 35 BPM. ISIP 2000 psi.
4/21/88	4415'-4429'	**Frac zone as follows:** 51,400# 20/40 sand in 590 bbls fluid. Treated @ avg press of 2100 psi w/avg rate of 35 BPM. ISIP 2540 psi.
10/8/94	4415'-4429'	Squeeze perfs. W/ 25 sxs cement. Test to 550#.
1/12/95	4352'-5859'	Treat perfs w/ 130 bbl 2% KCl. Treat at 837 psi @ 3.6 BPM, ISIP 470#.
10/04/03		Add new perforations. Update tubing detail.

PERFORATION RECORD

4/14/88	5852'-5859'	2 JSPF	14 holes
4/14/88	5813'-5826'	2 JSPF	26 holes
4/17/88	5500'-5512'	4 JSPF	48 holes
4/17/88	5490'-5498'	4 JSPF	32 holes
4/19/88	4906'-4911'	4 JSPF	20 holes
4/19/88	4899'-4904'	4 JSPF	20 holes
4/19/88	4886'-4898'	4 JSPF	48 holes
4/21/88	4421'-4929'	4 JSPF	32 holes
4/21/88	4415'-4420'	4 JSPF	20 holes
09/30/03	5072'-5078'	4 JSPF	24 holes
09/30/03	4415'-4430'	4 JSPF	60 holes

Inland Resources Inc.

Wells Draw Fed. #41-5G-9-16

632' FNL & 516' FEL

NENE Section 5-T9S-R16E

Duchesne Co, Utah

API #43-013-31205; Lease #U-30096

MR 10/23/03

Attachment E-5

Federal #11-4G-9-16

Spud Date: 12/21/89
Put on Production: 3/21/90
GL: 5750' KB: 5761'

Initial Production: 78 BOPD, 0 MCFD
130 BWPD

Wellbore Diagram

SURFACE CASING

CSG SIZE: 8-5/8"
GRADE: K-55
WEIGHT: 24#
LENGTH: 7 JTS
DEPTH LANDED: 296'
HOLE SIZE: 12-1/4"
CEMENT DATA: 165 Class "G"cmt, est ? bbls to surface

PRODUCTION CASING

CSG SIZE: 5-1/2"
GRADE: K-55
WEIGHT: 17#
LENGTH: 151 jts
HOLE SIZE: 7-7/8"
CEMENT DATA: 317 sks Hi-Lift & 595 sks 10-0 RFC
CEMENT TOP AT: 1430'
SET AT: 6453'

TUBING

SIZE/GRADE/WT: 2-7/8", J-55, 6.5#
NO. OF JOINTS: 185 jts (5800.04')
TUBING ANCHOR: 5813.04' KB
NO. OF JOINTS: 2 jts (62.73')
SEATING NIPPLE: 2-7/8" (1.10')
SN LANDED AT: 5878.57'
NO. OF JOINTS: 1 jt (31.35')
TOTAL STRING LENGTH: EOT @ 5911.47' w/13' KB

SUCKER RODS

POLISHED ROD: 1-1/2"x22'
SUCKER RODS: 1- 7/8" plain rods, 91- 7/8" scrapered rods, 4- ¾" scrapered rods, 122- ¾" plain rods, 10- ¾" scrapered rods
PUMP SIZE: 2-1/2" X 1-3/4" X 12 X 16' RHAC
STROKE LENGTH: 62"
PUMP SPEED, SPM: 7 SPM
LOGS: DIL/CDL/DSN, CBL/VDL/CLL

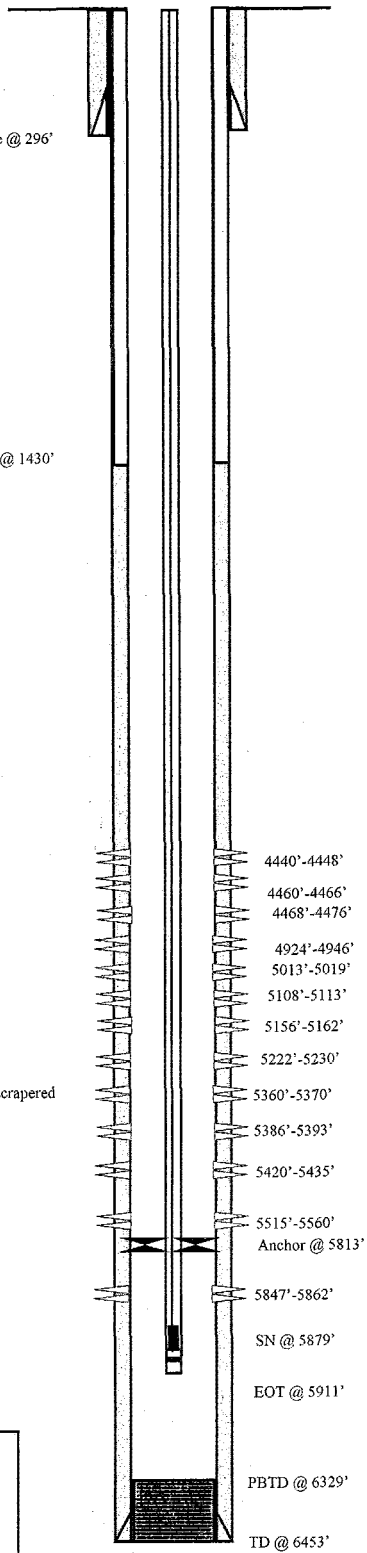

FRAC JOB

2-15-90	5847'-5862'	35,000# 20/40 sand, 53,000# 16/30 sand, and 88,000# ttl sd. Avg TP 2300 psi. ISIP-2330 psi.
2-17-90	5515'-5560'	Screened out w/42,000# 20/40 in formation. Job scheduled from 180,000#, cannot maintain rate. Avg TP 3700 psi. ISIP-2700 psi, 15 min 1870 psi.
2-21-90	5360'-5435'	70,000# 20/40 sand, 68,000# 16/30 sand, and 138,000 sd ttl. Avg TP 2600 psi. ISIP-1800 psi, 15 min 940 psi.
2-24-90	5222'-5019'	41,000# 16/30 sand. Avg TP 2900 psi, 15 min 1150 psi.
2-27-90	4924'-4946'	48,000# 20/40 sand. Sand master broke down & couldn't pump 16/30 sand. Avg TP 2550 psi. ISIP-1770 psi, 15 min 1500 psi.
2-05-03	5156'-5162'	Frac B.5 sands as follows: 20,307# 20/40 sand in 198 bbls Viking I-25 fluid. Treated @ avg. pressure of 3953 psi w/avg. rate of 14.5 BPM. ISIP - 2695 psi. Calc. flush: 1307 gal. Actual flush: 1218 gal.
2-05-03	4440'-4476'	Frac GB6 sands as follows: 74,499# 20/40 sand in 564 bbls Viking I-25 fluid. Treated @ avg. pressure of 2176 psi w/avg. rate of 24.6 BPM. ISIP - 2240 psi. Calc. flush: 4440 gal. Actual flush: 4242 gal.
02-20-06		Pump Change. Updated rod and tubing detail

PERFORATION RECORD

2-13-90	5847'-5862'	4 JSPF	60 holes
2-16-90	5515'-5560'	4 JSPF	180 holes
2-20-90	5360'-5370'	4 JSPF	40 holes
2-20-90	5386'-5393'	4 JSPF	28 holes
2-20-90	5420'-5435'	4 JSPF	60 holes
2-22-90	5222'-5230'	4 JSPF	32 holes
2-22-90	5108'-5113'	4 JSPF	20 holes
2-22-90	5013'-5019'	4 JSPF	24 holes
2-26-90	4924'-4946'	4 JSPF	88 holes
2-04-03	5156'-5162'	4 JSPF	24 holes
2-04-03	4468'-4476'	4 JSPF	32 holes
2-04-03	4460'-4466'	4 JSPF	24 holes
2-04-03	4440'-4448'	4 JSPF	32 holes

NEWFIELD

Federal #11-4G-9-16
800 FWL & 660 FNL
NWNW Section 4-T9S-R16E
Duchesne Co, Utah
API #43-013-31250; Lease #U-30096

TR 3-24-06

Attachment E-6

Federal #21-4G

Spud Date: 6-2-90
Put on Injection: 1-11-95
GL: 5715' KB: 5730'

Initial Production: 349 BOPD, 0 MCFD
57 BWPD

SURFACE CASING

CSG SIZE: 8-5/8"
GRADE: K-55
WEIGHT: 24#
LENGTH: 7 JTS
DEPTH LANDED: 305'
HOLE SIZE: 12-1/4"
CEMENT DATA: 210 sx Class "G"cmt

PRODUCTION CASING

CSG SIZE: 5-1/2"
GRADE: J-55
WEIGHT: 17#
LENGTH: ? jts
HOLE SIZE: 7-7/8"
CEMENT DATA: 145 sx Hi-Lift & 530 sx 10-0 RFC
CEMENT TOP AT: 1150'
SET AT: 6339'

TUBING

SIZE/GRADE/WT: 2-7/8", J-55, 6.5#
NO. OF JOINTS: 197 jts
TUBING ANCHOR: 4877'
SEATING NIPPLE: 2-7/8"
TOTAL STRING LENGTH: ?
SN LANDED AT: 6090'

Injection Diagram

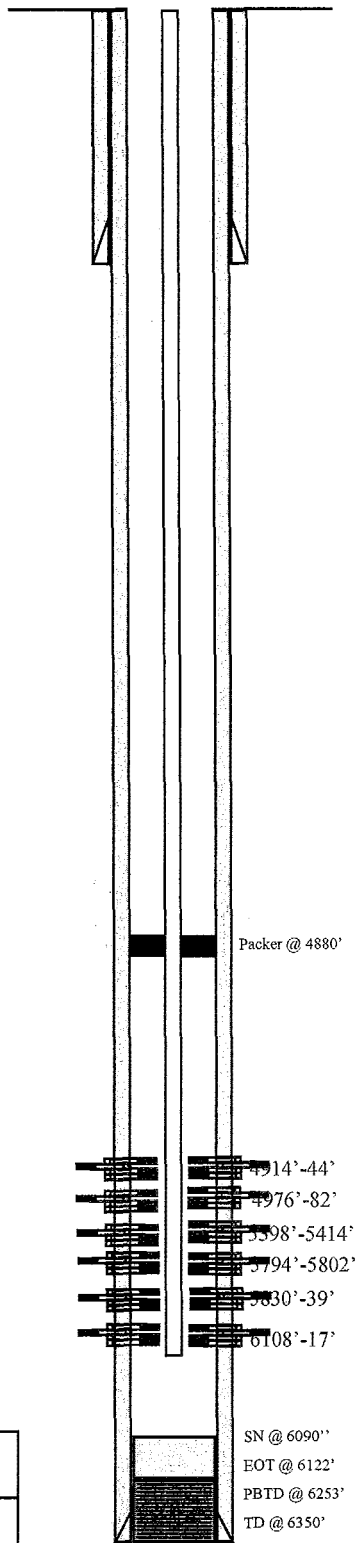

FRAC JOB

8-10-90	6108'-6117'	40,720# 20/40 sand, 542 bbls. Avg press of 2200 psi w/avg rate of 25 BPM. ISIP-2100 psi, 15 min 1880 psi.
8-12-90	5794'-5839'	32,020# 20/40 sand, 42,265# 16/30 sand, and 849 bbls. ISIP-2030 psi, 5 min 1850 psi.
8-14-90	5398'-5414'	37,400# 20/40 sand, 49,300# 16/30 sand, and 885 bbls. Avg TP 2550 psi w/avg rate of 35 BPM. ISIP-2000 psi, 15 min 1650 psi.
8-17-90	4914'-4982'	60,800# 20/40 sand, 80,100# 16/30 sand, and 1303 bbls. Avg TP 2400 psi w/avg press of rate of 50 BPM.

PERFORATION RECORD

8-9-90	6108'-6117'	4 JSPF	36 holes
8-11-90	5794'-5802'	4 JSPF	32 holes
8-11-90	5830'-5839'	4 JSPF	36 holes
8-13-90	5398'-5414'	4 JSPF	64 holes
8-15-90	4914'-4944'	4 JSPF	120 holes
8-15-90	4976'-4982'	4 JSPF	24 holes

Inland Resources Inc.

Federal #21-4G

1958 FWL 760 FNL

NENW Section 4-T9S-R16E

Duchesne Co, Utah

API #43-013-31272; Lease #U-30096

Attachment E-7

WELLS DRAW FED. G-4-9-16

Spud Date: 08/16/07
Put on Production: 10/04/07

GL: 5719' KB: 5731'

Wellbore Diagram

Initial Production: BOPD, MCFD, BWPD

SURFACE CASING

CSG SIZE: 8-5/8"
GRADE: J-55
WEIGHT: 24#
LENGTH: 7 jts. (296.61')
DEPTH LANDED: 308.46' KB
HOLE SIZE:12-1/4"
CEMENT DATA:1- 160, sxs Class "G" cmt, est 5 bbls cmt to surf.

PRODUCTION CASING

CSG SIZE: 5-1/2"
GRADE: J-55
WEIGHT: 15.5#
LENGTH: 162 jts. (6386.28')
DEPTH LANDED: 6386.03' KB
HOLE SIZE: 7-7/8"
CEMENT DATA: 350 sxs Prem. Lite II mixed & 480 sxs 50/50 POZ.

TUBING

SIZE/GRADE/WT.: 2-7/8" / J-55 / 6.5#
NO. OF JOINTS: 175 jts (5399.99')
TUBING ANCHOR: 5411.99' KB
NO. OF JOINTS: 1 jts (30.73')
SEATING NIPPLE: 2-7/8" (1.10')
SN LANDED AT: 5445.52' KB
NO. OF JOINTS: 2 jts (61.53')
TOTAL STRING LENGTH: EOT @ 5508.60' KB

SUCKER RODS

POLISHED ROD: 1-1/2" x 26' SM polished rods
SUCKER RODS:1-4' X 7/8" pony rods, 213-7/8"" scrapered rods, 4-1 ½" weight bars
PUMP SIZE: CDI 2-1/2" x 1-1/2" x 16x 20' 'RHAC
STROKE LENGTH: 144"
PUMP SPEED, 5 SPM:

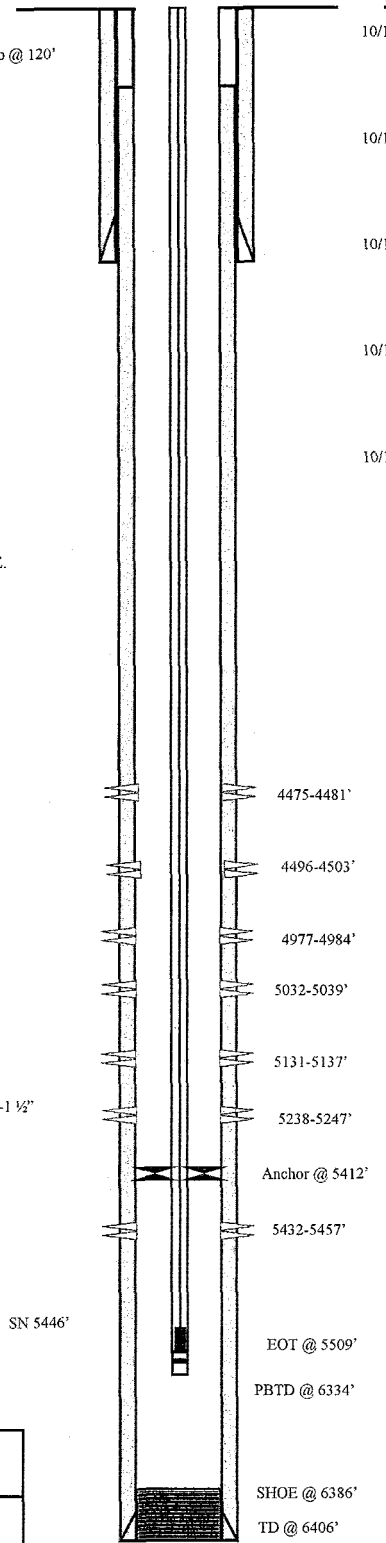

FRAC JOB

10/1/07 5649-5658' **Frac A1 sands as follows:** 105895# 20/40 sand in 805 bbls Lightning 17 frac fluid. Treated @ avg press of 1932 psi w/avg rate of 24.7 BPM. ISIP 2103 psi. Calc flush: 5647 gal. Actual flush: 4956 gal.

10/1/07 5236-5272' **Frac B1 sands as follows:** 25043# 20/40 sand in 368 bbl Lightning 17 frac fluid. Treated @ avg press of 1845 psi w/avg rate of 24.7 BPM. ISIP 1852 psi. Calc flush: 5234 gal. Actual flush: 4788 gal.

10/1/07 5131-5137' **Frac C sands as follows:** 15827# 20/40 sand in 281 bbls Lightning 17 frac fluid. Treated @ avg press of 2403 psi w/avg rate of 24.8 BPM. ISIP 2515 psi. Calc flush: 5129 gal. Actual flush: 4662 gal.

10/107 4977-5039' **Frac D2 & D1 sands as follows:** 66384# 20/40 sand in 544 bbls Lightning 17 frac fluid. Treated @ avg press of 2161 psi w/avg rate of 24.7 BPM. ISIP 2193 psi. Calc flush: 4975 gal. Actual flush: 4452 gal.

10/1/07 4475-4503' **Frac GB6 sands as follows:** 32962# 20/40 sand in 357 bbls Lightning 17 frac fluid. Treated @ avg press of 1760 psi w/avg rate of 24.8 BPM. ISIP 1916 psi. Calc flush: 4473 gal. Actual flush: 4368 gal.

PERFORATION RECORD

5432-5457'	4 JSPF	100 holes
5238-5247'	4 JSPF	36 holes
5131-5137'	4 JSPF	24 holes
5032-5039'	4 JSPF	28 holes
4977-4984'	4 JSPF	28 holes
4496-4503'	4 JSPF	28 holes
4475-4481'	4 JSPF	24 holes

NEWFIELD

WELLS DRAW FED. G-4-9-16

1994'FNL & 1964' FWL

SW/NW Section 4-T9S-R16E

Duchesne Co, Utah

API #43-013-33518; Lease # UTU-30096

TW 01/30/08

Attachment E-8

NGC Federal #32-5G

Spud Date: 7/19/82

Pu

t on Injection: 1/11/95

GL: 5809' KB: 5823'

Initial Production: 290 BOPD, 115 MCFPD, 9 BWPD

Injection Diagram

SURFACE CASING

CSG SIZE: 9-5/8"

GRADE: K-55

WEIGHT:36#

LENGTH: ?

DEPTH LANDED: 310'

HOLE SIZE: 12-1/4"

CEMENT DATA: 165 sxsClass "G" cmt, est ? bbls to surf.

PRODUCTION CASING

CSG SIZE: 5-1/2"

GRADE: N-80

WEIGHT: 17#

LENGTH: ?

DEPTH LANDED: 6450'

HOLE SIZE: 7-7/8"

CEMENT DATA: 200 sxs BJ Lite & 700 sxs 50/50 Poz cmt

CEMENT TOP AT:

TUBING

SIZE/GRADE/WT.: 2-7/8" / N-80 / 17#

NO. OF JOINTS: ?

TUBING ANCHOR: ?

SEATING NIPPLE: ?

TOTAL STRING LENGTH: ?

SN LANDED AT: ?

SUCKER RODS

POLISHED ROD:

SUCKER RODS:

PUMP SIZE:

STROKE LENGTH:

PUMP SPEED, SPM:

LOGS: DIL-GR-SP, CNL-FDC-GR-Cal, Prox-MicroLog, CBL

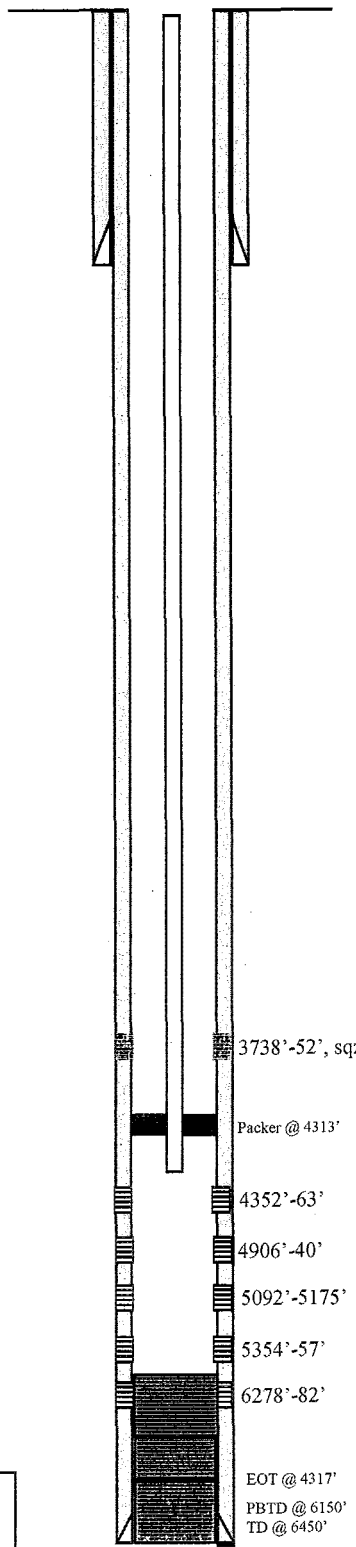

FRAC JOB

6278'-6282'	Acidize w/36 bbls. 15% MCA, ISIP 2100#.
5092'-5095'	Acidize w/25 bbls. KCL, 100 gal 15% frac w/45,100 gal fluid and 115,000 lbs. sand. ISIP 2310#.
4906'-4940'	Frac w/37,190 gal fluid and 75,740 lbs. sand. ISIP 3800#.
4352'-4363'	Frac w/34,910 gal fluid and 95,200 lbs. sand. ISIP 2350#.
3738'-3752'	Frac w/30,670 gal fluid and 62,000 lbs. sand. ISIP 1900#.
3738'-3752'	Sqz off w/100 sx. Class H cmt - held 3000 psi.
8/31/07	5 Year MIT completed and submitted.

PERFORATION RECORD

6278'-6282'	3 JSPF	13 holes
5092'-5357'	1 JSPF	14 holes
4906'-4940'	1 JSPF	26 holes
4352'-4363'	2 JSPF	23 holes

NEWFIELD

NGC Federal #32-5G

1976 FNL 1366 FEL

SWNE Section 5-T9S-R16E

Duchesne Co, Utah

API #43-013-30670; Lease #U-30096

CR 9/20/07

Attachment E-9

NGC #12-4G

Wellbore Diagram

Spud Date: 4-8-83
Put on Production: 9-12-83
GL: 5734' KB: 5748'

Initial Production: 55 BOPD, 0 MCFD
16 BWPD

SURFACE CASING

CSG SIZE: 8-5/8"
GRADE: J-55
WEIGHT: 32#
LENGTH: 7 JTS
DEPTH LANDED: 305'
HOLE SIZE: 12-1/4"
CEMENT DATA: 215 skx Class "G"cmt, est 18 bbls to surface

PRODUCTION CASING

CSG SIZE: 5-1/2"
GRADE: K-55, J-55
WEIGHT: 15.5#
LENGTH: 166 jts (6409')
HOLE SIZE: 7-7/8"
CEMENT DATA: 682 sks BJ Lite
CEMENT TOP AT: 2496'
SET AT: 6518'

TUBING

SIZE/GRADE/WT: 2-7/8", J-55, 6.5#
NO. OF JOINTS: 192
TUBING ANCHOR: 4826'
SEATING NIPPLE: 2-7/8"
TOTAL STRING LENGTH: ?
SN LANDED AT: 6105'

SUCKER RODS

POLISHED ROD: 1-1/4"x22'
SUCKER RODS: 92-7/8" scrapered; 142-3/4" sucker; 9 sinker bars
TOTAL ROD STRING LENGTH:
PUMP NUMBER:
PUMP SIZE: 2-1/2"x1-3/4"x16' RHAC
STROKE LENGTH:
PUMP SPEED, SPM:
LOGS: CBL,GR, CCL (6420'-2000')

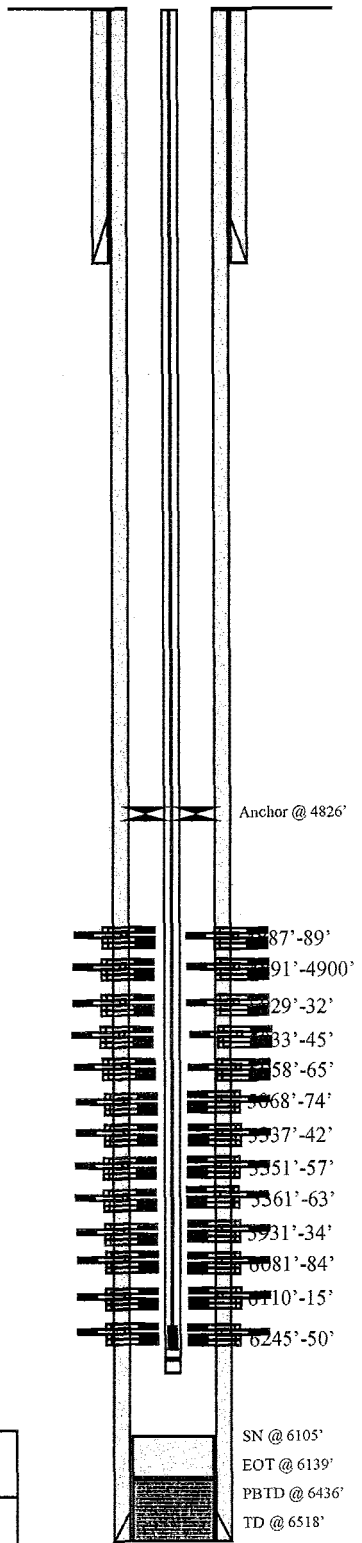

FRAC JOB

8-26-83	5931'-6250'	80,000# 20/40 ttl sd, 26,800 gals ttl fluid. Avg rate of 38 BPM w/ avg press of 2500 psi. ISIP-1950 psi, 5 min 1900 psi.
8-26-83	5337'-5367'	160,000 ttl sd, 45,940 gals ttl fluid. Avg rate of 37 BPM w/ avg press of 1900 psi. ISIP-1800 psi, 5 min 1710 psi.
8-30-83	5029'-5074'	198,000 ttl sd, 55,590 gals ttl fluid. Avg rate of 47 BPM w/ avg press of 2300 psi. ISIP-2100 psi, 5 min 1700 psi.
9-1-83	4887'-4900'	99,400# ttl sd, 28,190 ttl fluid. Avg rate of 38 BPM w/avg press of 2300 psi. ISIP-2250 psi, 5 min 1900 psi.

PERFORATION RECORD

8-24-83	5931'-5934'	1 JSPF	4 holes
8-24-83	6081'-6084'	1 JSPF	4 holes
8-24-83	6110'-6115'	1 JSPF	6 holes
8-24-83	6245'-6250'	2 JSPF	11 holes
8-26-83	5337'-5342'	2 JSPF	11 holes
8-26-83	5351'-5357'	2 JSPF	13 holes
8-26-83	5361'-5363'	2 JSPF	5 holes
8-30-83	5029'-5032'	3 JSPF	10 holes
8-30-83	5033'-5045'	3 JSPF	36 holes
8-30-83	5058'-5065'	3 JSPF	22 holes
8-30-83	5068'-5074'	3 JSPF	19 holes
8-31-83	4891'-4900'	3 JSPF	28 holes
8-31-83	4887'-4889'	3 JSPF	7 holes

Inland Resources Inc.

NGC #12-4G

809 FWL 2083 FNL

SWNW Section 4-T9S-R16E

Duchesne Co, Utah

API #43-013-30699; Lease #U-30096

Attachment E-10

Wells Draw #6-4-9-16

Spud Date: 1/7/98
Put on Production: 2/6/98
GL: 5721' KB: 5733'

Initial Production: 84 BOPD, 94 MCFD
8 BWPD

Wellbore Diagram

SURFACE CASING

CSG SIZE: 8-5/8"
GRADE: K-55
WEIGHT: 24#
LENGTH: 7 jts
DEPTH LANDED: 290'
HOLE SIZE: 12-1/4"
CEMENT DATA: 120 sxs Premium, est 6 bbls to surface

CEMENT TOP AT: Surface per CBL

PRODUCTION CASING

CSG SIZE: 5-1/2"
GRADE: J-55
WEIGHT: 15.5#
LENGTH: 140 jts 5997'
HOLE SIZE: 7-7/8"
CEMENT DATA: 380 sxs Hibond & 365 sxs Thixotropic
CEMENT TOP AT: Surface per CBL
SHOE SET AT: 6008'

TUBING

SIZE/GRADE/WT: 2 7/8" / M-50 / 6.5#
NO. OF JOINTS: 152 jts. (4729.31')
NO. OF JOINTS: 19 jts. (613.81') J-55
TUBING ANCHOR: 5355.12'
NO. OF JOINTS: 1 jt. (33.03')
SEATING NIPPLE: 2 7/8" (1.10')
SN LANDED AT: 5390.95'
NO. OF JOINTS: 2 jts. (62.58') M-50 tbg
TOTAL STRING LENGTH: EOT @ 5455.08' KB

SUCKER RODS

POLISHED ROD: 1 1/2" X 22'
SUCKER RODS: 6-1 1/2" weight rods; 25-3/4" scrapered rods, 89-3/4" plain rods, 95-3/4" scrapered rods, 1-6', 1-4', x 3/4" pony rods
PUMP SIZE: 2 1/2" X 1 1/2" x 12' X 15.5' RHAC
STROKE LENGTH: 54"
PUMP SPEED, SPM: 4 SPM
LOGS: DIGL/SP/GR/CAL (6022'-300')
DSN/SDL/GR (5984'-3000')

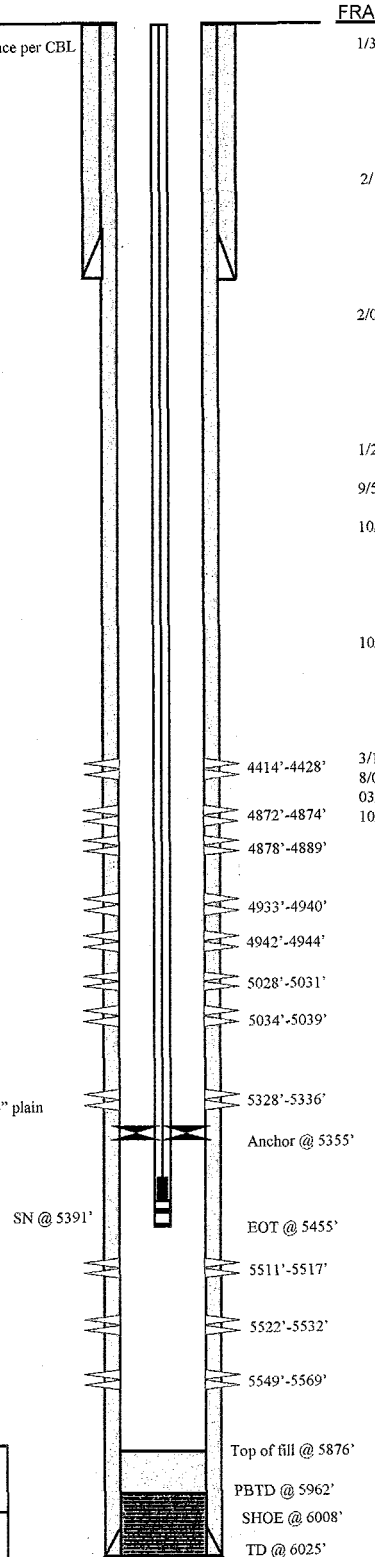

FRAC JOB

1/30/98	5511'-5569	Frac LDC sands as follows: 120,300# 20/40 sd in 582 bbls Delta frac. Breakdown @ 2640 psi. Treated @ avg press of 1980 psi w/avg rate of 34.9 BPM . ISIP - 2411 psi, 5 min 2168 psi. Flowback on 12/64 ck for 4-1/2 hrs & died.
2/1/98	5328'-5336'	Frac A sands as follows: 81,300 # sd in 459 bbls Delta frac. Breakdown @ 2501 psi. Treated @ avg press of 3500 psi w/avg rate of 25 BPM. ISIP - 2094 psi, 5 min 3041 psi. Flowback on 12/64 ck for 2-1/2 hrs & died.
2/04/98	4872'-5039'	Frac D/C sands as follows: 113,300 # 20/40 sd in 556 bbls Delta frac. Breakdown @ 1109 psi. Treated w/avg pres of 1600 psi w/avg rate of 30 BPM. ISIP - 2094 psi, 5 min 2026 psi. Flowback on 12/64 ck 2-1/2 hrs & died.
1/2/02		Pump change. Update rod and tubing details.
9/5/02		Tubing leak. Update rod and tubing details.
10/24/02	4872'-4889'	Refrac D1 sands as follows: 50,000# 20/40 sand in 203 bbls Viking I-25 fluid. Treated @ avg pressure of 2280 psi w/avg rate of 24.6 BPM. ISIP - 2625 psi. Calc. flush: 4872 gals. Actual flush: 4869 gals.
10/24/02	4414'-4428'	Frac GB6 sands as follows: 50,000# 20/40 sand in 214 bbls Viking I-25 fluid. Treated @ avg pressure of 2013 psi w/avg rate of 22.7 BPM. ISIP - 2080 psi. Calc. flush: 4414 gals. Actual flush: 4661 gals.
3/1/03		Pump change. Update rod detail.
8/02/04		Tubing Leak. Update tubing and rod detail.
03/28/07		**Pump Change**. Update rod & tubing details.
10/09/07		**Pump Change**. Update rod & tubing details

PERFORATION RECORD

1-29-98	5511'-5517'	4 JSPF	24 holes
1-29-98	5522'-5532'	4 JSPF	40 holes
1-29-98	5549'-5569'	4 JSPF	80 holes
1-31-98	5328'-5336'	4 JSPF	32 holes
2-03-98	4872'-4874'	4 JSPF	8 holes
2-03-98	4878'-4889'	4 JSPF	44 holes
2-03-98	4933'-4940'	4 JSPF	28 holes
2-03-98	4942'-4944'	4 JSPF	8 holes
2-03-98	5028'-5031'	4 JSPF	12 holes
2-03-98	5034'-5039'	4 JSPF	20 holes
10-24-02	4414'-4428'	4 JSPF	56 holes

NEWFIELD

Wells Draw #6-4-9-16

1980' FNL & 1980' FWL

SE/NW Section 4-T9S-R16E

Duchesne Co, Utah

API #43-013-31972; Lease #U-30096

TW 11/14/07

Attachment E-11

WELLS DRAW FED. M-5-9-16

Spud Date: 06/11/2006
Put on Production: 10/03/07
GL: 5786' KB: 5798'

Wellbore Diagram

Initial Production: BOPD, MCFD, BWPD

SURFACE CASING

CSG SIZE: 8-5/8"
GRADE: J-55
WEIGHT: 24#
LENGTH: 7 jts. (312.89')
DEPTH LANDED: 322.89' KB
HOLE SIZE:12-1/4"
CEMENT DATA:1- 160, sxs Class "G" cmt, est 4 bbls cmt to surf.

PRODUCTION CASING

CSG SIZE: 5-1/2"
GRADE: J-55
WEIGHT: 15.5#
LENGTH: 147 jts. (6439.02')
DEPTH LANDED: 6452.27' KB
HOLE SIZE: 7-7/8"
CEMENT DATA: 325 sxs Prem. Lite II mixed & 450 sxs 50/50 POZ.

TUBING

SIZE/GRADE/WT.: 2-7/8" / J-55 / 6.5#
NO. OF JOINTS: 178 jts (5556.73')
TUBING ANCHOR: 5568.73' KB
NO. OF JOINTS: 1 jts (31.42')
SEATING NIPPLE: 2-7/8" (1.10')
SN LANDED AT: 5602.95' KB
NO. OF JOINTS: 2 jts (62.75')
TOTAL STRING LENGTH: EOT @ 5667.25' KB

SUCKER RODS

POLISHED ROD: 1-1/2" x 26' SM polished rods
SUCKER RODS:1-2',1-4' & 1- 8' x 7/8" pony rods, 219-7/8" scrapered rods, 8-guides per rod, 4-1 ½" weight rods.
PUMP SIZE: CDI 2-1/2" x 1-1/2" x 17'x 20' 'RHAC
STROKE LENGTH: 144"
PUMP SPEED, 6 SPM:

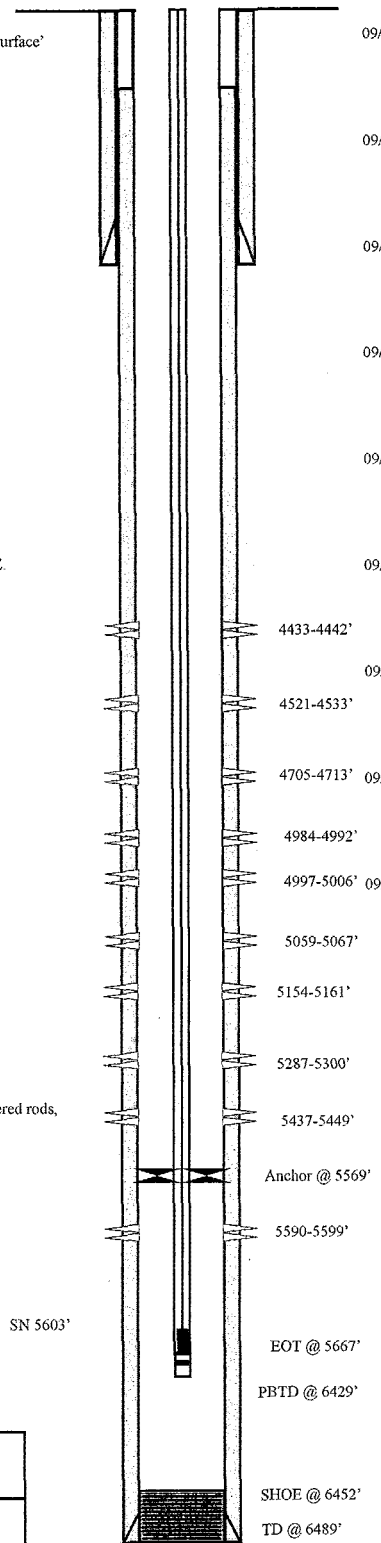

FRAC JOB

09/26/07 5590-5599' **Frac LODC sands as follows:** 34374# 20/40 sand in 442 bbls Lightning 17 frac fluid. Treated @ avg press of 2165 psi w/avg rate of 24.7 BPM. ISIP 2250 psi. Calc flush: 5588 gal. Actual flush: 5082 gal.

09/26/07 5437-5449' **Frac A1 sands as follows:** 29486# 20/40 sand in 396 bbl Lightning 17 frac fluid. Treated @ avg press of 1979 psi w/avg rate of 24.7 BPM. ISIP 2375 psi. Calc flush: 5435 gal. Actual flush: 4931 gal.

09/26/07 5287-5300' **Frac B2 sands as follows:** 85338# 20/40 sand in 665 bbls Lightning 17 frac fluid. Treated @ avg press of 1878 psi w/avg rate of 24.8 BPM. ISIP 2080 psi. Calc flush: 5285 gal. Actual flush: 4780 gal.

09/26/07 5154-5161' **Frac C sands as follows:** 14758# 20/40 sand in 281 bbls Lightning 17 frac fluid. Treated @ avg press of 2474 psi w/avg rate of 24.8 BPM. ISIP 2200 psi. Calc flush: 5152 gal. Actual flush: 4649 gal.

09/26/07 5059-5067' **Frac D2 sands as follows:** 44707# 20/40 sand in 439 bbls Lightning 17 frac fluid. Treated @ avg press of 1973 psi w/avg rate of 24.7 BPM. ISIP 2045 psi. Calc flush: 5057 gal. Actual flush: 4553 gal.

09/26/07 4984-5006' **Frac D1 sands as follows:** 120191# 20/40 sand in 868 bbls Lightning 17 frac fluid. Treated @ avg press of 2233 psi w/avg rate of 24.8 BPM. ISIP 2300 psi. Calc flush: 4982 gal. Actual flush: 4477 gal

09/27/07 4705-4713' **Frac PB8 sands as follows:** 24177# 20/40 sand in 379 bbls Lightning 17 frac fluid. Treated @ avg press of 2192 psi w/avg rate of 24.7 BPM. ISIP 2450 psi. Calc flush: 4703 gal. Actual flush: 4200 gal

09/27/07 4521-4533' **Frac GB6 sands as follows:** 109705# 20/40 sand in 801 bbls Lightning 17 frac fluid. Treated @ avg press of 1866 psi w/avg rate of 24.7 BPM. ISIP 2030 psi. Calc flush: 4519 gal. Actual flush: 4015 gal

09/27/07 4433-4442' **Frac GB2 sands as follows:** 34269# 20/40 sand in 351 bbls Lightning 17 frac fluid. Treated @ avg press of 1943 psi w/avg rate of 24.8 BPM. ISIP 1975 psi. Calc flush: 4431 gal. Actual flush: 4347 gal

PERFORATION RECORD

5590-5599'	4 JSPF	36 holes
5437-5449'	4 JSPF	48 holes
5287-5300'	4 JSPF	52 holes
5154-5161'	4 JSPF	28 holes
5059-5067'	4 JSPF	32 holes
4997-5006'	4 JSPF	36 holes
4984-4992'	4 JSPF	32 holes
4705-4713'	4 JSPF	32 holes
4521-4533'	4 JSPF	48 holes
4433-4442'	4 JSPF	36 holes

NEWFIELD

WELLS DRAW FED. M-5-9-16
2033'FNL & 1816' FWL
SE/NW Section 5-T9S-R16E
Duchesne Co, Utah
API #43-013-33249; Lease # UTU-30096

TW 01/29/08

Attachment E-12

Wells Draw #10-5-9-16

Spud Date: 3/14/2000
Put on Production: 4/10/2000
GL: 5843' KB: 5853'

Initial Production: 80 BOPD, 258 MCFD, 1 BWPD

Wellbore Diagram

SURFACE CASING

CSG SIZE: 8-5/8"
GRADE: J-55
WEIGHT: 24#
LENGTH: 7 jts. (297.24')
DEPTH LANDED: 309.09'
HOLE SIZE:12-1/4"
CEMENT DATA: 141 sxs Class "G" cmt,

PRODUCTION CASING

CSG SIZE: 5-1/2"
GRADE: J-55
WEIGHT: 15.5#
LENGTH: 130 jts. (5995.54')
DEPTH LANDED: 5993.14'
HOLE SIZE: 7-7/8"
CEMENT DATA: 265 sk Prem. Lite II mixed & 400 sxs 50/50 POZ.
CEMENT TOP: 880' per CBL

TUBING

SIZE/GRADE/WT.: 2-7/8" / J-55 / 6.5#
NO. OF JOINTS: 169 jts (5284.20')
TUBING ANCHOR: 5294.2'
NO. OF JOINTS: 2 jts (62.94')
SEATING NIPPLE: 2-7/8" (1.10')
SN LANDED AT: 5359.94'
NO. OF JOINTS: 1 jts (31.35')
TOTAL STRING LENGTH: EOT @ 5392.84'

SUCKER RODS

POLISHED ROD: 1-1/2" x 22'
SUCKER RODS: 1-4', 1-2'x3/4" pony rods, 108 - 3/4" scrapered rods, 100 - 3/4" scrapered rods, 6-1-1/2" weight bars.
PUMP SIZE: 2-1/2" x 1-1/2" x 15' RHAC
STROKE LENGTH: 64"
PUMP SPEED, SPM: 5 spm
LOGS:Dual Lateralog, GR, SP, Spectral Density-Dual Spaced Neutron, CBL-GR

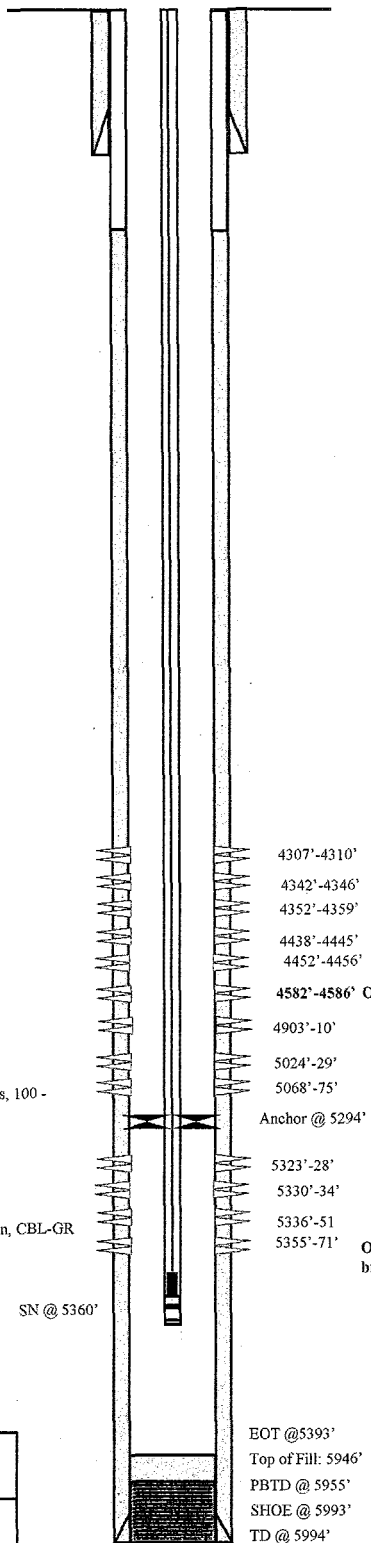

FRAC JOB

4/05/00	5323'-71'	**Frac A sands as follows:** 96,000# 20/40 sand in 604 bbls Viking 1-25 fluid. Treated @ avg press of 1700 psi w/ avg rate of 33 BPM. ISIP: 2200 psi. Calc. flush: 5323 gal. Actual flush: 5250 gal.
4/05/00	4903-5075'	**Frac D/C sands as follows:** 119,171# 20/40 sand in 634 bbls Viking 1-25 fluid. Treated @ avg press of 2360 psi w/ avg rate of 34.3 BPM. ISIP: 2370 psi. Calc. flush: 4903 gal. Actual flush: 4830 gal.
12/19/01		Pump change. Update pump details.
9/27/02	4307'-4456'	**Frac GB 2,4,6 sands as follows:** 88,800# 20/40 white mesh sand in 377 bbls Viking 1-25 fluid. Treated @ avg press of 2,695 psi w/ avg rate of 24.7 BPM. ISIP: 2210 psi. Calc. flush: 4307 gal. Actual flush: 4200 gal.
01/08/04		Guide complete rod string. Update rod details.

PERFORATION RECORD

4/05/00	5355'-5371'	2 JSPF	32 holes
4/05/00	5336'-5351'	2 JSPF	30 holes
4/05/00	5330'-5334'	2 JSPF	08 holes
4/05/00	5323'-5328'	2 JSPF	10 holes
4/05/00	5068'-5075'	4 JSPF	28 holes
4/05/00	5024'-5029'	4 JSPF	20 holes
4/05/00	4903'-4910'	4 JSPF	28 holes
Out of Zone-Not treated or broken down	**9/27/02**	**4582'-4586'**	**4 JSPF**	**16 holes**
9/27/02	4452'-4456'	4 JSPF	16 holes
9/27/02	4438'-4445'	4 JSPF	28 holes
9/27/02	4352'-4359'	4 JSPF	28 holes
9/27/02	4342'-4346'	4 JSPF	16 holes
9/27/02	4307'-4310'	4 JSPF	12 holes

NEWFIELD

Wells Draw # 10-5-9-16

1787' FSL & 2034' FEL

NW/SE Section 5-T9S-R16E

Duchesne Co, Utah

API #43-013-32133; Lease #UTU-034217A

CT 2/28/08

Attachment E-13

Castle Peak Federal #43-5-9-16

Spud Date: 1/2/84
Put on Production: 2/14/84
Put on Injection: 7/2/98

GL: 5786' KB: 5796'

Initial Production: 45 BOPD, 14 MCFD
20 BWPD

SURFACE CASING

CSG SIZE: 8-5/8"
DEPTH LANDED: 240'
HOLE SIZE: 12-1/4"
CEMENT: 190 sx Class "G"cmt

PRODUCTION CASING

CSG SIZE: 5-1/2"
HOLE SIZE: 7-7/8"
CEMENT DATA: 195 sks Lite & 385 sks thixotropic
CEMENT TOP AT: 750'
SET AT: 6025'

TUBING

SIZE/GRADE/WT: 2-3/8", J-55, 6.5#
NO. OF JOINTS: 137 jts
SN LANDED AT: ?
X-over: 2 3/8" to 2 7/8"
PACKER: ?'
TOTAL STRING LENGTH: ?

Injection Wellbore Diagram

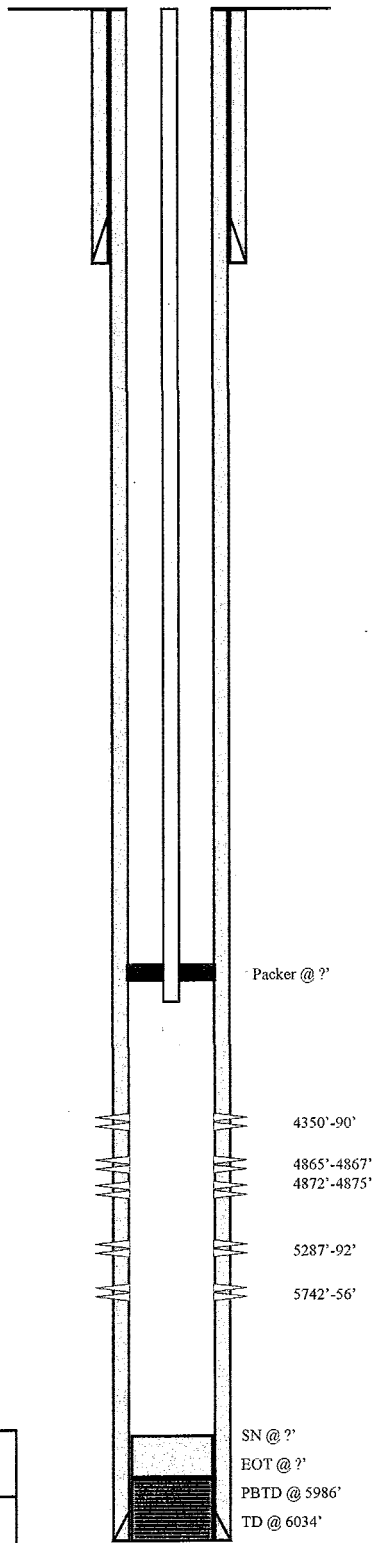

FRAC JOB

2-11-84	**5742'-5756'**	44,010 gals YF4G, containing 1000# inverta frac sd, 2000# diverta frac sd, 44,000# 20/40 sd & 16,992# 10/20 sd. Screened out. Avg rate of 11 BPM @ 1900 psi.
3-8-84	**5287'-5297'**	38,396 gals YF4G containing 1002 # diverta frac sd., 2005 # inverta frac sd, 38,000# 20/40 sd & 10,000# 10/20 sd. Avg rate of 12 BPM @ 2650 psi. ISIP-2700 psi, 15 min 2200 psi.
3-29-84	**4350'-4390'**	68,352 gals YF4G containing 85,500# 20/40 sd & 3360# 10/20 sd. Screened out. Avg rate of 20 BPM @ 1900 psi. ISIP-2000 psi, 20 min 1175 psi.
3-20-85	**4865'-4875'**	KCl water @ 5500 psi spotted 500 gallons 15% acid & brokedown new zone @ 2800 psi./4 bpm to 1900 psi/ 7-1/2 bpm, balled off, surged balls off perfs, released pkr & ran by perfs, pulled up reseat packer @ 4450, fraced well w/ Nowsco, total fluid 40,000 gals Beta II 35 gals containing 77,000# 20/40 sand, max sand cond = 5 ppg, Air = 17 bpm, Aip = 3000 psi, ISIP = 2200 psi
6/30/98		Convert to injector.

PERFORATION RECORD

2-11-84	5742'-5756'	2 JSPF	28 holes
3-7-84	5287'-5292'	2 JSPF	20 holes
3-28-84	4350'-4390'	2 JSPF	80 holes
3-20-85	4865'-4867'	4 JSPF	8 holes
3-20-85	4872'-4875'	4 JSPF	12 holes

Inland Resources Inc.

Castle Peak Federal #43-5-9-16

1989 FSL & 570 FEL

NESE Section 5-T9S-R16E

Duchesne Co, Utah

API #43-013-30858; Lease #U-034217A

BDH 3/6/03

Attachment E-14

Monument Federal #13-4-9-16

Spud Date: 1-6-97
Put on Production: 2-4-97
GL: 5761' KB: 5773'

Initial Production: 65 BOPD, 116 MCFD
0 BWPD

Wellbore Diagram

SURFACE CASING

CSG SIZE: 8-5/8"
GRADE: J-55
WEIGHT: 24#
LENGTH: 5 JTS (253')
DEPTH LANDED: 263'
HOLE SIZE: 12-1/4"
CEMENT DATA: 160 skx Class G cement

PRODUCTION CASING

CSG SIZE: 5-1/2"
GRADE: J-55
WEIGHT: 15.5#
LENGTH: 140 jts
HOLE SIZE: 7-7/8"
CEMENT DATA: 275 sks Prem Lite & 500 sks 50/50 Poz mix
CEMENT TOP AT: 785'
SET AT: 5925'

TUBING

SIZE/GRADE/WT: 2-7/8", J-55, 6.5#
NO. OF JOINTS: 144 jts (4558.22')
36 jts new (1142.08')
TUBING ANCHOR: 5710.30' KB
NO. OF JOINTS: 2 jts (64.56')
SEATING NIPPLE: 2-7/8" (1.10')
SN LANDED AT: 5777.66' KB
NO. OF JOINTS: 2 jt (62.23')
TOTAL STRING LENGTH: EOT @ 5841.44' KB

SUCKER RODS

POLISHED ROD: 1-1/4" x 22'
SUCKER RODS: 1-2', 1-4' x 3/4" pony rod, 88-3/4" guided rods, 85-3/4" slick rods, 50-3/4" guided rods, 6-1 1/2" wt bars
PUMP SIZE: 1-25-150 RHAC 12-4-13-16
STROKE LENGTH: 131"
PUMP SPEED, SPM:
LOGS: DLL/GR, LDT/CNL

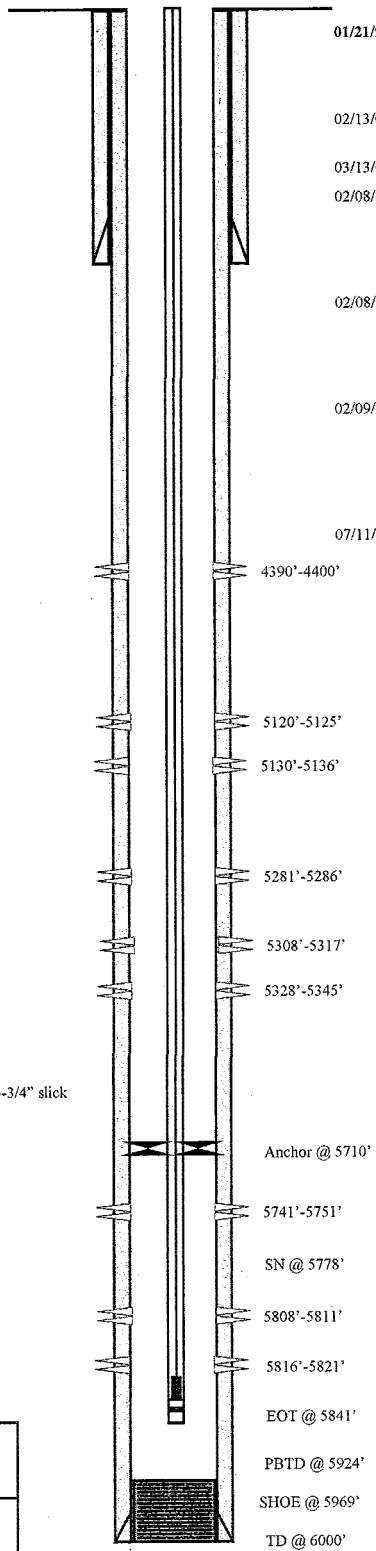

FRAC JOB

01/21/97	5281'-5345'	**27,000#'s 320/40 sand, 66,900# 16/30 sand, and 27,678 gals fluid. Treated w/avg rate of 30.8 BPM w/ avg press of 1690 psi. ISIP-1920 psi**
02/13/02		Tubing leak. Update rod and tubing details.
03/13/03		Parted polished rod. Update rod detail.
02/08/05	5741'-5821'	**Frac CP1 and CP.5 sands as follows:** 49276#'s of 20/40 sand in 408 bbls of lighting 17 fluid. Treated w/avg press of 3750 psi @ avg rate of 14.3 bpm. ISIP 2400 psi. Calc flush: 5739 gal. Actual flush: 1419 gal.
02/08/05	5120'-5136'	**Frac B1 sands as follows:** 40,000#s of 20/40 sand in 380 bbls of lighting 17 fluid. Treated w/avg press of 2189 psi @ avg rate of 24.8 bpm. ISIP 2140 psi. Calc flush: 1965 gal. Actual flush: 4909 gal.
02/09/05	4390'-4400'	**Frac GB6 sands as follows:** 25,402#s of 20/40 sand in 268 bbls of lightning 17 fluid. Treated w/avg press of 2095 psi @ avg rate of 24.7 bpm. ISIP 2140 psi. Calc flush: 4388 gal. Actual flush: 4305 gal.
07/11/06	**Tubing Leak**	Rod & Tubing detail updated.

PERFORATION RECORD

02/07/05	5816'-5821'	4JSPF	20 holes
02/07/05	5808'-5811'	4JSPF	12 holes
02/07/05	5741'-5751'	4JSPF	40 holes
01/18/97	5328'-5345'	4JSPF	68 holes
01/18/97	5308'-5317'	4JSPF	36 holes
01/18/97	5281'-5286'	4JSPF	20 holes
02/07/05	5130'-5136'	4JSPF	24 holes
02/07/05	5120'-5125'	4JSPF	20 holes
02/09/05	4390'-4400'	4JSPF	40 holes

NEWFIELD

Monument Federal #13-4-9-16

2050 FSL & 660 FWL

NWSW Section 4-T9S-R16E

Duchesne Co, Utah

API #43-013-31716; Lease #U-73086

TW 12-12-06

Attachment E-15

Castle Peak Unit #9-5-9-16

Spud Date: 3/11/65
Put on Production: 4/12/65
P&A: 2/15/74
GL: 5811' KB: 5821'

Initial Production: 102 BOPD, 50 MCFD, 3 BWPD

Cumm. Production: 24,918 BO, 37,861 MCFG, 0 BW.

P&A

Wellbore Diagram

SURFACE CASING

CSG SIZE: 9-5/8"
GRADE: H-40
WEIGHT: 32.5#
DEPTH LANDED: 221' KB
HOLE SIZE:
CEMENT DATA: 150 sxs cement.

PRODUCTION CASING

CSG SIZE: 4-1/2"
GRADE: J-55
WEIGHT: 11.6#
DEPTH LANDED: 5862' KB
HOLE SIZE:
CEMENT DATA: 450 cubic feet cement
CEMENT TOP AT: ? per CBL

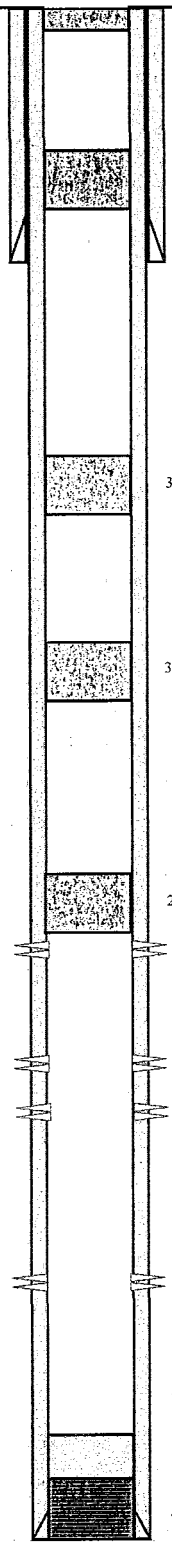

FRAC JOB

4602'-5747'

Frac sands as follows:
48,000# sand in 909 bbls water. Treated @ avg press of 4500 psi w/avg rate of 50 BPM. Started to screen out. Flush with 3948 gal. ISIP 1800 psi.

PERFORATION RECORD

5739'-5747'	1 JSPF	8 holes
5331'-5341'	1 JSPF	10 holes
5299'-5302'	1 JSPF	3 holes
4602'-4605'	1 JSPF	3 holes

Inland Resources Inc.

Castle Peak #9-5-9-16

819' FSL & 763' FEL

SESE Section 5-T9S-R16E

Duchesne Co, Utah

API #43-013-15787; Lease #U-34217-A

BDH 9/12/02

Attachment E-16

South Wells Draw 16-5T-9-16

Spud Date: 4/11/03
Put on Production: 7/11/03
GL: 5810' KB: 5822'

Wellbore Diagram

Initial Production: 106 BOPD, 86 MCFD,19 BWPD

SURFACE CASING

CSG SIZE: 8 5/8"
GRADE: J-55
WEIGHT: 24#
LENGTH: 7 jts. (292.42')
DEPTH LANDED: 302.42' KB
HOLE SIZE:12 1/4"
CEMENT DATA: 150 sxs Class "G" cmt, est 3.5 bbls cmt to surf.

PRODUCTION CASING

CSG SIZE: 5 1/2"
GRADE: J-55
WEIGHT: 15.5#
LENGTH: 140 jts. (6246.18')
DEPTH LANDED: 6244.18' KB
HOLE SIZE: 7 7/8"
CEMENT DATA: 300 sxs Prem. Lite II mixed & 400 sxs 50/50 POZ.
CEMENT TOP AT: 70'

TUBING

SIZE/GRADE/WT: 2 7/8" / J-55 / 6.5#
NO. OF JOINTS: 187 jts (5883.31')
TUBING ANCHOR: 5895.31' KB
NO. OF JOINTS: 2 jts (62.89')
SEATING NIPPLE: 2 7/8" (1.10')
SN LANDED AT: 5961.00' KB
NO. OF JOINTS: 2 jts (63.00')
TOTAL STRING LENGTH: EOT @ 6025.55' W/ KB

SUCKER RODS

POLISHED ROD: 1 1/2" x 22' SM
SUCKER RODS: 6- 1 1/2" weight rods, 10- 3/4" scrapered rods; 122- 3/4" plain rods, 99- 3/4" scrapered rods, 1- 6', & 1- 2' x 3/4" pony rods
PUMP SIZE: 2 1/2" x 1 1/2" x 15' RHAC
STROKE LENGTH: 86"
PUMP SPEED, SPM: 4.5 SPM

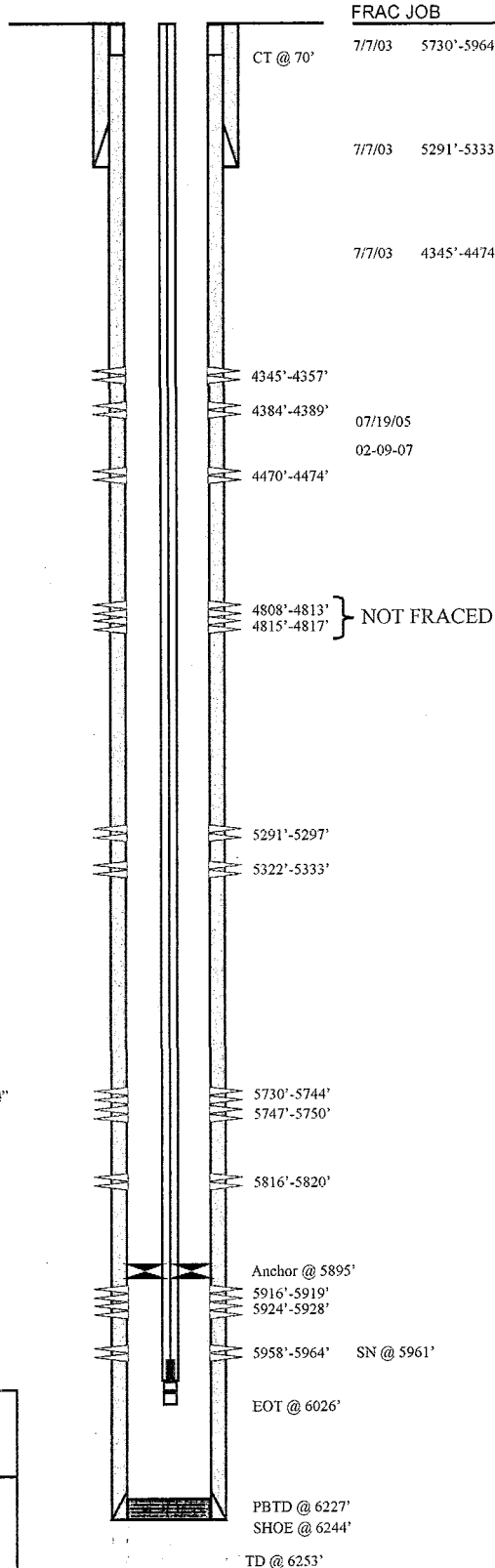

FRAC JOB

7/7/03	5730'-5964'	**Frac CP.5 CP2, CP3, & CP4 sands as follows:** 89,016# 20/40 sand in 697 Bbls Viking I-25 fluid. Treated @ avg. press of 1731 psi w/ avg rate of 24.5 BPM. ISIP: 1983 psi. Calc flush: 5728 gal. Actual flush: 5628 gal..
7/7/03	5291'-5333'	**Frac A1 & A3 sands as follows:** 52,556# 20/40 sand in 461 Bbls Viking I-25 fluid. Treated @ avg. press of 2040 psi w/ avg rate of 24.5 BPM. ISIP: 2270 psi. Calc flush: 5289 gal. Actual flush: 5208 gal.
7/7/03	4345'-4474'	**Frac GB4, GB6, & PB7 sands as follows:** 80,766# 20/40 sand in 576 Bbls Viking I-25 fluid. Treated @ avg. press of 1950 psi w/ avg rate of 24.7 BPM. ISIP: 2125 psi. Calc flush: 4343 gal. Actual flush: 4242 gal.
07/19/05		**Pump change**. Update tubing and rod details.
02-09-07		**Tubing Leak:** Updated rod and tubing detail

PERFORATION RECORD

7/3/03	5958'-5964'	4 JSPF	24 holes
7/3/03	5924'-5928'	4 JSPF	16 holes
7/3/03	5916'-5919'	4 JSPF	12 holes
7/3/03	5816'-5820'	4 JSPF	16 holes
7/3/03	5747'-5750'	4 JSPF	12 holes
7/3/03	5730'-5744'	4 JSPF	56 holes
7/7/03	5322'-5333'	4 JSPF	44 holes
7/7/03	5291'-5297'	4 JSPF	24 holes
7/7/03	4815'-4817'	4 JSPF	8 holes
7/7/03	4808'-4813'	4 JSPF	20 holes
7/7/03	4470'-4474'	4 JSPF	16 holes
7/7/03	4384'-4389'	4 JSPF	20 holes
7/7/03	4345'-4357'	4 JSPF	48 holes

NEWFIELD

South Wells Draw 16-5T-9-16
897' FSL & 823' FEL
SE/SE Section 5-T9S-R16E
Duchesne Co, Utah
API #43-013-32433 ; Lease #UTU-73086

TK 2-28-2007

Attachment F
1 of 4

West Coast Region
5125 Boylan Street
Bakersfield, CA 83308
(661) 325-4138
Lab Team Leader - Sheila Hernandez
(432) 495-7240

Water Analysis Report by Baker Petrolite

Company:	NEWFIELD EXPLORATION	Sales RDT:	31706
Region:	WESTERN REGION	Account Manager:	RANDY HUBER (435) 823-0023
Area:	MYTON, UT	Sample #:	43436
Lease/Platform:	WELLS DRAW	Analysis ID #:	79483
Entity (or well #):	8-5-9-16	Analysis Cost:	$80.00
Formation:	UNKNOWN		
Sample Point:	WELLHEAD		

Summary

Sampling Date:	02/19/08
Analysis Date:	02/26/08
Analyst:	LISA HAMILTON
TDS (mg/l or g/m3):	10449.4
Density (g/cm3, tonne/m3):	1.007
Anion/Cation Ratio:	1.0000001
Carbon Dioxide:	
Oxygen:	
Comments:	

Analysis of Sample 43436 @ 75 °F

Anions	mg/l	meq/l	Cations	mg/l	meq/l
Chloride:	**5176.0**	**146.**	**Sodium:**	**3879.7**	**168.76**
Bicarbonate:	**1149.0**	**18.83**	**Magnesium:**	**3.0**	**0.25**
Carbonate:	**108.0**	**3.6**	**Calcium:**	**8.0**	**0.4**
Sulfate:	**91.0**	**1.89**	**Strontium:**	**2.0**	**0.05**
Phosphate:			**Barium:**	**7.5**	**0.11**
Borate:			**Iron:**	**11.0**	**0.4**
Silicate:			Potassium:	14.0	0.36
			Aluminum:		
Hydrogen Sulfide:			Chromium:		
			Copper:		
pH at time of sampling:			Lead:		
pH at time of analysis:		8.35	Manganese:	0.200	0.01
pH used in Calculation:		**8.35**	Nickel:		

Conditions		Values Calculated at the Given Conditions - Amounts of Scale in lb/1000 bbl										
Temp	Gauge Press.	Calcite $CaCO_3$		Gypsum $CaSO_4*2H_2O$		Anhydrite $CaSO_4$		Celestite $SrSO_4$		Barite $BaSO_4$		CO_2 Press
°F	psi	Index	Amount	Index	Amount	Index	Amount	Index	Amount	Index	Amount	psi
80	0	0.34	3.47	-3.26	0.00	-3.32	0.00	-2.08	0.00	1.60	4.16	0.07
100	0	0.32	3.47	-3.27	0.00	-3.27	0.00	-2.07	0.00	1.45	4.16	0.13
120	0	0.30	3.12	-3.28	0.00	-3.20	0.00	-2.04	0.00	1.33	4.16	0.22
140	0	0.30	3.12	-3.27	0.00	-3.10	0.00	-2.01	0.00	1.22	4.16	0.37

Note 1: When assessing the severity of the scale problem, both the saturation index (SI) and amount of scale must be considered.

Note 2: Precipitation of each scale is considered separately. Total scale will be less than the sum of the amounts of the five scales.

Note 3: The reported CO2 pressure is actually the calculated CO2 fugacity. It is usually nearly the same as the CO2 partial pressure.

Attachment F
2 of 4

Scale Predictions from Baker Petrolite

Analysis of Sample 43436 @ 75 °F for NEWFIELD EXPLORATION, 02/26/08

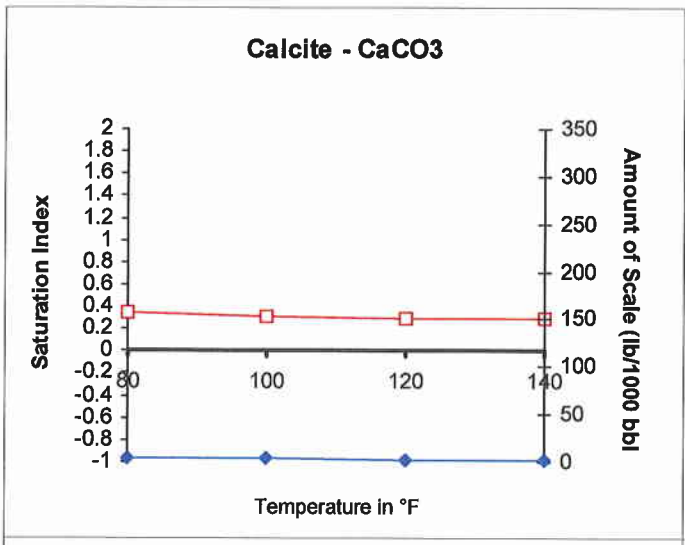

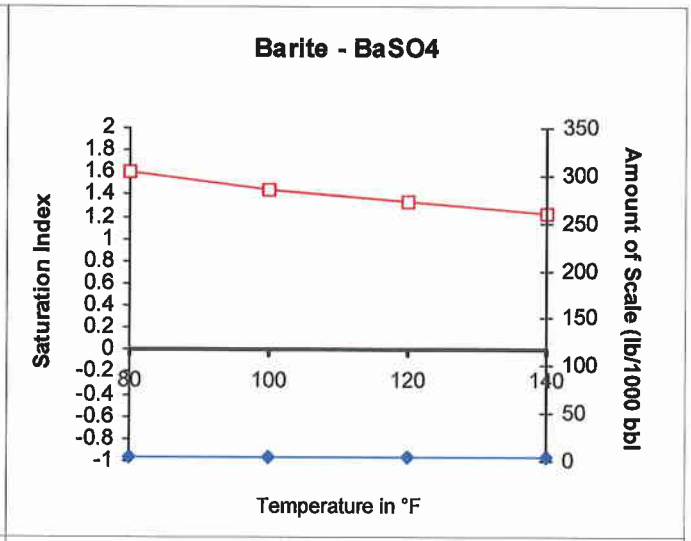

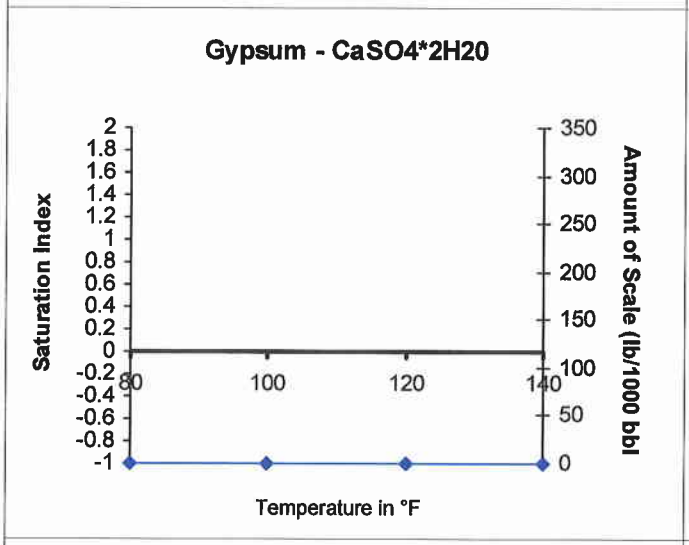

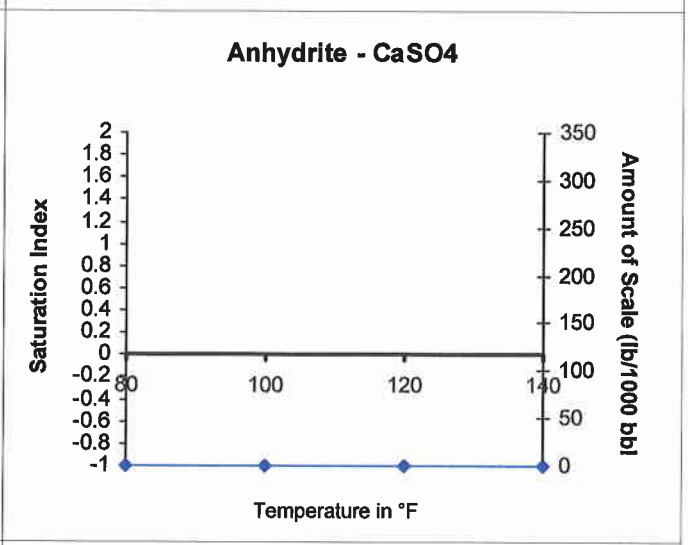

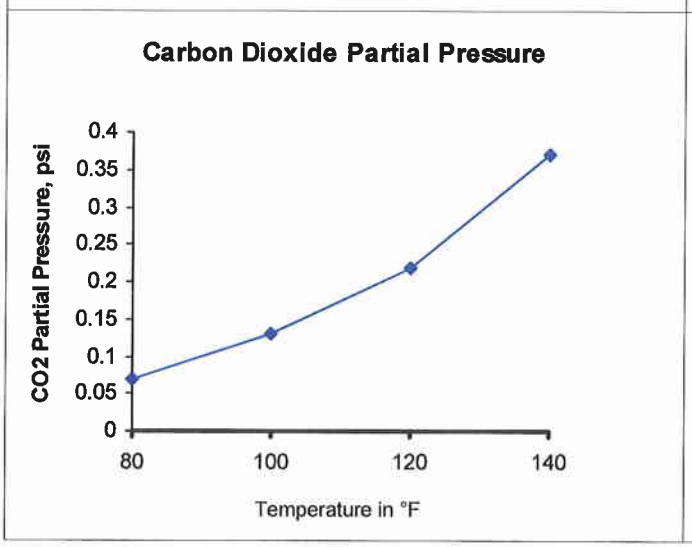

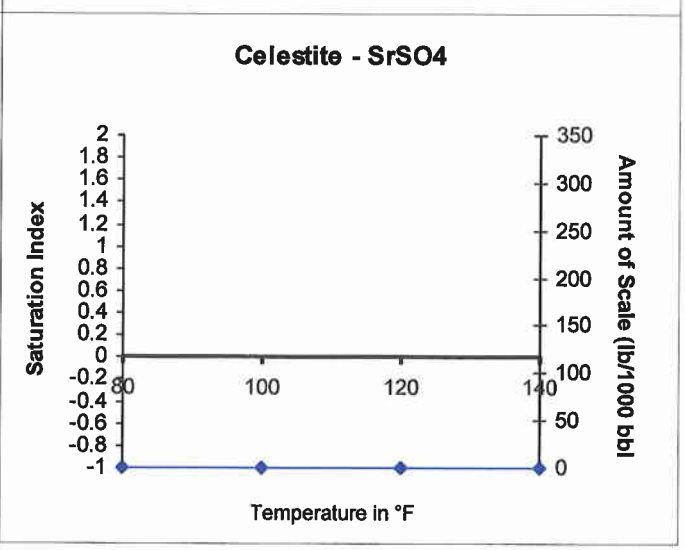

Attachment F
3 of 4

West Coast Region
5125 Boylan Street
Bakersfield, CA 83308
(661) 325-4138
Lab Team Leader - Sheila Hernandez
(432) 495-7240

Water Analysis Report by Baker Petrolite

Company:	NEWFIELD EXPLORATION	Sales RDT:	31706
Region:	WESTERN REGION	Account Manager:	RANDY HUBER (435) 823-0023
Area:	MYTON, UT	Sample #:	409361
Lease/Platform:	SOUTH WELLS DRAW	Analysis ID #:	78571
Entity (or well #):	INJECTION SYSTEM	Analysis Cost:	$80.00
Formation:	UNKNOWN		
Sample Point:	TRIPLEX SUCTION		

Summary	
Sampling Date:	01/20/08
Analysis Date:	01/25/08
Analyst:	STACEY SMITH
TDS (mg/l or g/m3):	4924.9
Density (g/cm3, tonne/m3):	1.003
Anion/Cation Ratio:	1.0000001
Carbon Dioxide:	
Oxygen:	
Comments:	

Analysis of Sample 409361 @ 75 °F

Anions	mg/l	meq/l	Cations	mg/l	meq/l
Chloride:	**2313.0**	**65.24**	**Sodium:**	**1726.0**	**75.08**
Bicarbonate:	**678.0**	**11.11**	**Magnesium:**	**19.0**	**1.56**
Carbonate:	**0.0**	**0.**	**Calcium:**	**39.0**	**1.95**
Sulfate:	**129.0**	**2.69**	**Strontium:**	**2.5**	**0.06**
Phosphate:			**Barium:**	**7.0**	**0.1**
Borate:			**Iron:**	**0.3**	**0.01**
Silicate:			Potassium:	11.0	0.28
			Aluminum:		
Hydrogen Sulfide:			Chromium:		
pH at time of sampling:			Copper:		
			Lead:		
pH at time of analysis:		8.13	Manganese:	0.060	0.
pH used in Calculation:		**8.13**	Nickel:		

Conditions		Values Calculated at the Given Conditions - Amounts of Scale in lb/1000 bbl										
Temp	Gauge Press.	Calcite $CaCO_3$		Gypsum $CaSO_4*2H_2O$		Anhydrite $CaSO_4$		Celestite $SrSO_4$		Barite $BaSO_4$		CO_2 Press
°F	psi	Index	Amount	Index	Amount	Index	Amount	Index	Amount	Index	Amount	psi
80	0	0.72	14.65	-2.18	0.00	-2.25	0.00	-1.63	0.00	1.92	4.19	0.07
100	0	0.76	16.74	-2.19	0.00	-2.19	0.00	-1.61	0.00	1.78	4.19	0.1
120	0	0.81	19.18	-2.19	0.00	-2.11	0.00	-1.58	0.00	1.66	4.19	0.16
140	0	0.86	21.62	-2.18	0.00	-2.01	0.00	-1.54	0.00	1.57	4.19	0.24

Note 1: When assessing the severity of the scale problem, both the saturation index (SI) and amount of scale must be considered.

Note 2: Precipitation of each scale is considered separately. Total scale will be less than the sum of the amounts of the five scales.

Note 3: The reported CO2 pressure is actually the calculated CO2 fugacity. It is usually nearly the same as the CO2 partial pressure.

Attachment F
4 of 4

Scale Predictions from Baker Petrolite

Analysis of Sample 409361 @ 75 °F for NEWFIELD EXPLORATION, 01/25/08

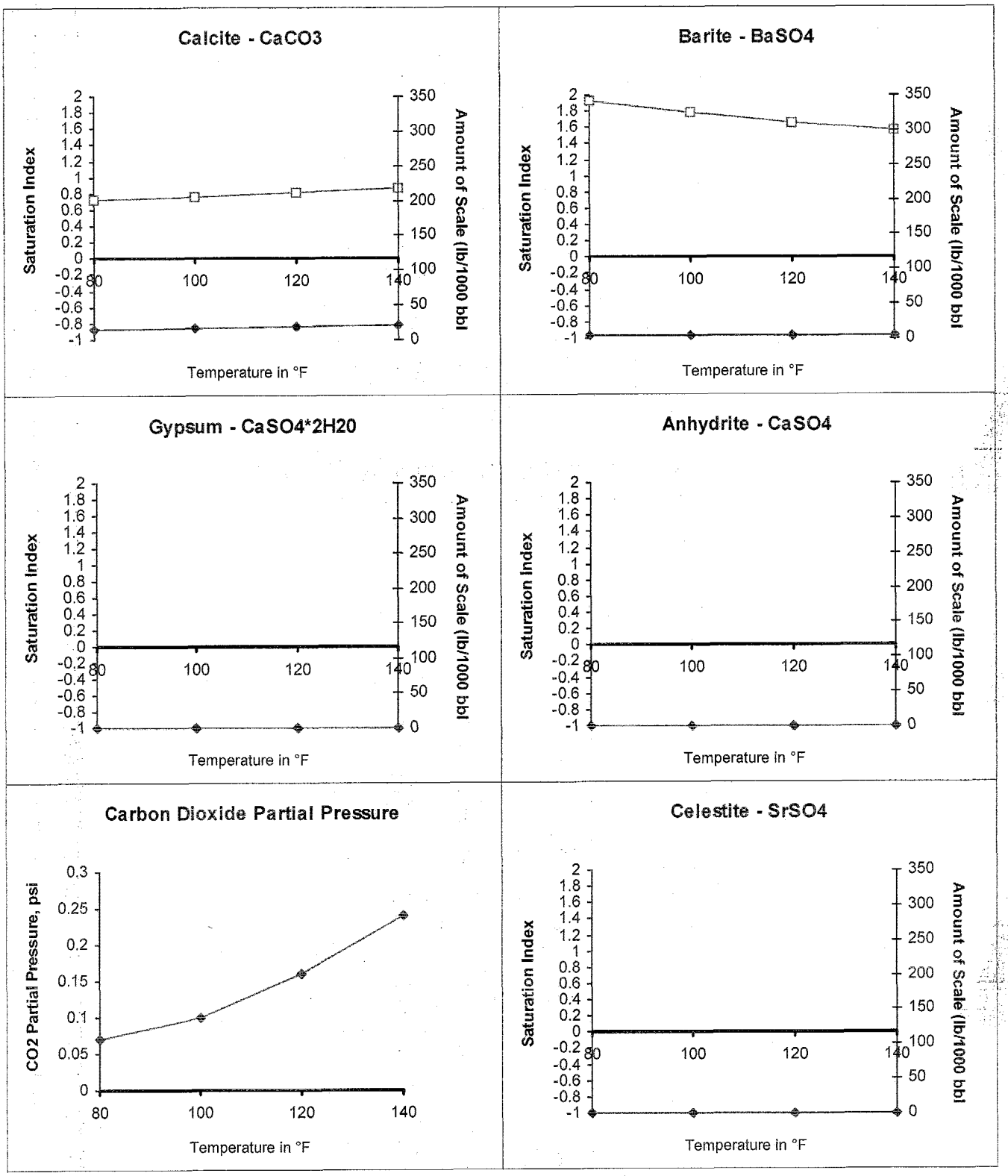

Attachment "G"

Wells Draw #8-5-9-16
Proposed Maximum Injection Pressure

Frac Interval (feet) Top	Bottom	Avg. Depth (feet)	ISIP (psi)	Calculated Frac Gradient (psi/ft)	Pmax
5792	5860	5826	2250	0.82	2212
5558	5582	5570	3030	0.98	2994
5334	5352	5343	2325	0.87	2290
5046	5164	5105	1950	0.82	1917 ←
4891	4924	4908	2650	0.97	2618
4676	4684	4680	2230	0.91	2200
4336	4460	4398	2230	0.95	2202
				Minimum	1917

Calculation of Maximum Surface Injection Pressure
Pmax = (Frac Grad -(0.433*1.015)) x Depth of Top Perf
where pressure gradient for the fresh water is .433 psi/ft and
specific gravity of the injected water is 1.015.

Frac Gradient = (ISIP +(0.433*Top Perf.))/Top Perf.

Please note: These are existing perforations; additional perforations may be added during the actual conversion procedure.

Attachment G-1
1 of 9

Inland RESOURCES INC.

DAILY COMPLETION REPORT

WELL NAME: Wells Draw 8-5-9-16 Report Date: 4/19/00 Completion Day: 02

Present operation: Trip & land production tbg/ swab well Rig: Pennant #4

WELL STATUS

Surf Csg: 8 5/8 @ 307' Production csg: 5 1/2" 17# & 15.5 # J-55 @ 5991' Csg PBTD: 5955'

Tbg: Size: 2 7/8 Wt: 6.5# Grd: J-55 Pkr/EOT: 0 BP/Sand PBTD: 5955'

PERFORATION RECORD

Zone	Perfs	SPF/#shots	Zone	Perfs	SPF/#shots
D sds	4891-4897'	2/12			
D sds	4899-4924'	2/50			

CHRONOLOGICAL OPERATIONS

Date Work Performed: 18-Apr-00 SITP: SICP: 0

RU Schlumberger and perf D sds @ 4891-97' & 4899-4924' W/ 2 JSPF. RD WLT. NU isolation tool. RU BJ Services and frac D sds W/ 84,020# 20/40 sand in 479 bbls Viking I-25 fluid. Hole filled W/ 75 bbls fluid. Perfs broke dn @ 3800 psi. Treated @ ave press of 2300 psi W/ ave rate of 30 BPM. ISIP-2650 psi, 5 min-2461 psi. RD BJ. Flow frac back on 12/64 choke for 5 hrs. Rec 218 BTF (est 45% of frac load) @ current. Turn flow into empty tank through 12/64" choke @ 7:00 PM W 550 psi FCP. Release rig crew. Est 301 BWTR (includes 40 bbls ahead of frac).

FLUID RECOVERY (BBLS)

Starting fluid load to be recovered: 0 Starting oil rec to date: 0

Fluid lost/recovered today: 301 Oil lost/recovered today: 0

Ending fluid to be recovered: 301 Cum oil recovered: 0

IFL: FFL: FCP: 550 psi Choke: 12/64 Final Fluid Rate: Final oil cut:

STIMULATION DETAIL

Base Fluid used: Viking I-25 Job Type: Sand frac

Company: BJ Services

Procedure or Equipment detail:

3000 gals of pad

1000 gals W/ 1-6 ppg of 20/40 sand

9000 gals W/ 6-8 ppg of 20/40 sand

2390 gals W/ 8-9 ppg of 20/40 sand

Flush W/ 4746 gals of slick water

Max TP: 3721 Max Rate: 30 BPM Total fluid pmpd: 479 bbls

Avg TP: 2300 Avg Rate: 30 BPM Total Prop pmpd: 84,020#

ISIP: 2650 5 min: 2461 10 min: 15 min:

Completion Supervisor: Gary Dietz

COSTS

Pennant rig	$2,366
BOP	$130
Schlumberger	$2,255
BJ Services	$27,065
Fuel gas (+/- 200mcf)	$600
Water & truck	$700
CBL	$1,500
Tbg head	$1,500
Loc. Preparation	$300
Trucking	$700
Tbg	$15,250
Frac tks (2X2 days)	$40
IPC Supervision	$200
DAILY COST:	$52,606
TOTAL WELL COST:	$195,451

Inland RESOURCES INC.

Attachment G-1
2 of 9

DAILY COMPLETION REPORT

WELL NAME: Wells Draw 8-5-9-16 **Report Date:** 5/2/01 **Day:** 02

Operation: Re-completion **Rig:** Ross #11

WELL STATUS

Surf Csg: 8 5/8 @ 307' Prod Csg: 5 1/2" 17# @ 2745' & 5 1/2" 15.5# f/ 2745' to 5991' Csg PBTD: 5955'

Tbg: Size: 2 7/8 Wt: 6.5# Grd: L-80 Pkr/EOT @: 0 BP/Sand PBTD: 5943'

PERFORATION RECORD

Zone		Perfs	SPF/#shots	Zone	Perfs		SPF/#shots
GB2 sds	new	4336-4360'	4/96	B .5 sds	5124-5128'	new	4/16
GB6 sds	new	4442-4450'	4/32	B1 sds	5154-5164'	new	4/40
GB6 sds	new	4456-4460'	4/16	A1 sds	5334-5344'	new	4/40
PB 11 sds	new	4676-4684'	4/32	A1 sds	5348-5352'	new	4/16
D sds	exist	4891-4897'	2/12	LDC sds	5558-5582'	new	4/96
D sds	exist	4899-4924'	2/50	CP .5 sds	5792-5796'	new	4/16
C sds	new	5046-5054'	4/32	CP 1 sds	5852-5860'	new	4/32
C sds	new	5068-5087'	4/76				

CHRONOLOGICAL OPERATIONS

Date Work Performed: 1-May-01 **SITP:** 0 **SICP:** 0

Con't Tally, drift, PU & TIH W/ 4 3/4 bit, 5 1/2 csg scraper & 2 7/8 8rd 6.5# L-80 tbg. Tag fill @ 5943'. TOH W/ tbg. LD bit & scraper. RU Schlumberger. Perf intervals as follows: CP1 sd @ 5852-60'; CP .5 sd @ 5792-96'; LDC sd @ 5558-82'; A1 sd @ 5348-52' & 5334-44'; B1 sd @ 5154-64'; B .5 sd @ 5124-28'; C sd @ 5068-87' & 5046-54'; PB 11 sd @ 4676-84'; GB 6 sd @ 4456-60' & 4442-50' & GB 2 sd @ 4336-60'. All 4 JSPF. 8 runs total W/ no misruns. RD WLT. SIFN W/ est 200 BWTR.

FLUID RECOVERY (BBLS)

Starting fluid load to be recovered: 200 Starting oil rec to date: 0

Fluid lost/recovered today: 0 Oil lost/recovered today:

Ending fluid to be recovered: 200 Cum oil recovered: 0

IFL: FFL: FTP: Choke: Final Fluid Rate: Final oil cut:

STIMULATION DETAIL

Base Fluid used: Job Type:

Company:

Procedure or Equipment detail:

Max TP: Max Rate: Total fluid pmpd:

Avg TP: Avg Rate: Total Prop pmpd:

ISIP: 5 min: 10 min: 15 min:

Completion Supervisor: Gary Dietz

COSTS

Ross rig	$2,105
BOP	$130
Schlumberger-Perfs	$10,102
IPC Supervision	$200
DAILY COST:	$12,537
TOTAL WELL COST:	$17,700

Attachment G-1
3 of 9

Inland RESOURCES INC.

DAILY COMPLETION REPORT

WELL NAME: Wells Draw 8-5-9-16 **Report Date:** 5/3/01 **Day:** 03

Operation: Re-completion **Rig:** Ross #11

WELL STATUS

Surf Csg: 8 5/8 @ 307' Prod Csg: 5 1/2" 17# @ 2745' & 5 1/2" 15.5# f/ 2745' to 5991' Csg PBTD: 5955'

Tbg: Size: 2 7/8 Wt: 6.5# Grd: L-80 Pkr/EOT @: 5690' BP/Sand PBTD: 5895'

PERFORATION RECORD

Zone		Perfs	SPF/#shots	Zone	Perfs		SPF/#shots
GB2 sds	new	4336-4360'	4/96	B .5 sds	5124-5128'	new	4/16
GB6 sds	new	4442-4450'	4/32	B1 sds	5154-5164'	new	4/40
GB6 sds	new	4456-4460'	4/16	A1 sds	5334-5344'	new	4/40
PB 11 sds	new	4676-4684'	4/32	A1 sds	5348-5352'	new	4/16
D sds	exist	4891-4897'	2/12	LDC sds	5558-5582'	new	4/96
D sds	exist	4899-4924'	2/50	CP .5 sds	5792-5796'	new	4/16
C sds	new	5046-5054'	4/32	CP 1 sds	5852-5860'	new	4/32
C sds	new	5068-5087'	4/76				

CHRONOLOGICAL OPERATIONS

Date Work Performed: 2-May-01 **SITP:** 0 **SICP:** 0

TIH W/ 5 1/2" "TS" RBP, 2 3/8 tbg sub, 5 1/2" "HD" pkr & 2 7/8 L-80 tbg. Set tools & isolate CP1 sds (5852-60') Breakdown perfs @ 4000 psi. Establish injection rate of 2.6 BPM @ 2800 psi. Move tools & isolate CP .5 sds (5792-96'). Breakdown perfs @ 3200 psi. Establish injection rate of 1.7 BPM @ 2600 psi. Used 36 BW for breakdowns. Re-set RBP @ 5895'. Pull pkr to 5690'. Leave unset. SIFN W/ est 236 BWTR.

FLUID RECOVERY (BBLS)

Starting fluid load to be recovered: 200 Starting oil rec to date: 0

Fluid lost/recovered today: 36 Oil lost/recovered today:

Ending fluid to be recovered: 236 Cum oil recovered: 0

IFL: FFL: FTP: Choke: Final Fluid Rate: Final oil cut:

STIMULATION DETAIL

Base Fluid used: Job Type:

Company:

Procedure or Equipment detail:

Max TP: Max Rate: Total fluid pmpd:

Avg TP: Avg Rate: Total Prop pmpd:

ISIP: 5 min: 10 min: 15 min:

Completion Supervisor: Gary Dietz

COSTS

Ross rig	$1,475
BOP	$130
Weatherford-tools/serv	$2,340
IPC Supervision	$200
DAILY COST:	$4,145
TOTAL WELL COST:	$21,845

Inland RESOURCES INC.

Attachment G-1
4 of 9

DAILY COMPLETION REPORT

WELL NAME: Wells Draw 8-5-9-16 **Report Date:** 5/4/01 **Day:** 04

Operation: Re-completion **Rig:** Ross #11

WELL STATUS

Surf Csg: 8 5/8 @ 307' Prod Csg: 5 1/2" 17# @ 2745' & 5 1/2" 15.5# f/ 2745' to 5991' Csg PBTD: 5955'

Tbg: Size: 2 7/8 Wt: 6.5# Grd: L-80 Pkr/EOT @: 5470' BP/Sand PBTD: 5635'

PERFORATION RECORD

Zone		Perfs	SPF/#shots	Zone	Perfs		SPF/#shots
GB2 sds	new	4336-4360'	4/96	B .5 sds	5124-5128'	new	4/16
GB6 sds	new	4442-4450'	4/32	B1 sds	5154-5164'	new	4/40
GB6 sds	new	4456-4460'	4/16	A1 sds	5334-5344'	new	4/40
PB 11 sds	new	4676-4684'	4/32	A1 sds	5348-5352'	new	4/16
D sds	exist	4891-4897'	2/12	LDC sds	5558-5582'	new	4/96
D sds	exist	4899-4924'	2/50	CP .5 sds	5792-5796'	new	4/16
C sds	new	5046-5054'	4/32	CP 1 sds	5852-5860'	new	4/32
C sds	new	5068-5087'	4/76				

CHRONOLOGICAL OPERATIONS

Date Work Performed: 3-May-01 **SITP:** 0 **SICP:** 0

PU & set pkr @ 5695' W/ frac valve collar below pipe rams. RU BJ Services and frac CP sds dn 2 7/8 L-80 tbg W/ 49,221# 20/40 sand in 327 bbls Viking I-25 fluid. Treated @ ave press of 14 BPM W/ ave rate of 14 BPM. ISIP-2250 psi. FIlled annulus & held 100-200 psi during frac. Used 140 BTF. RD BJ. Begin immediate flowback of CP frac on 12/64 choke @ 1 BPM. Zone flowed 2 1/2 hrs & died. Rec 106 BTF (est 32% of frac load). Release pkr. Circ hole clean. TIH W/ RH, tbg sub, pkr & L-80 tbg. Tag sd @ 5865'. C/O sd to RBP @ 5895'. Release & re-set plug @ 5635'. Pull pkr to 5470'. Set pkr W/ frac valve sub beneath pipe rams. Pump against LDC perfs @ 2200 psi (max available pump output) & won't breakdown. Release pkr. SIFN W/ est 597 BWTR.

FLUID RECOVERY (BBLS)

Starting fluid load to be recovered: 236 Starting oil rec to date: 0

Fluid lost/recovered today: 361 Oil lost/recovered today:

Ending fluid to be recovered: 597 Cum oil recovered: 0

IFL: FFL: FTP: Choke: 12/64 Final Fluid Rate: Final oil cut:

STIMULATION DETAIL

Base Fluid used: Viking I-25 Job Type: Sand Frac

Company: BJ Services

Procedure or Equipment detail: CP sands

3500 gals of pad

2500 gals W/ 1-5 ppg of 20/40 sand

5000 gals W/ 5-8 ppg of 20/40 sand

1320 gals W/ 8 ppg of 20/40 sand

Flush W/ 1428 gals of slick water

Pumped down 2 7/8 L-80 tbg

Max TP: 3667 Max Rate: 14 BPM Total fluid pmpd: 327 bbls

Avg TP: 3450 Avg Rate: 14 BPM Total Prop pmpd: 49,221#

ISIP: 2250 5 min: 10 min: 15 min:

Completion Supervisor: Gary Dietz

COSTS

Ross rig	$2,255
BOP	$130
BJ Services-CP sds	$19,499
Fuel gas (+/- 30 mcf)	$180
Frac water	$100
Weatherford-service	$525
IPC Supervision	$200
DAILY COST:	$22,889
TOTAL WELL COST:	$44,734

Attachment G-1
5 of 9

Inland RESOURCES INC.

DAILY COMPLETION REPORT

WELL NAME: Wells Draw 8-5-9-16 **Report Date:** 5/5/01 **Day:** 05

Operation: Re-completion **Rig:** Ross #11

WELL STATUS

Surf Csg: 8 5/8 @ 307' Prod Csg: 5 1/2" 17# @ 2745' & 5 1/2" 15.5# f/ 2745' to 5991' Csg PBTD: 5955'

Tbg: Size: 2 7/8 Wt: 6.5# Grd: L-80 Pkr/EOT @: 5250' BP/Sand PBTD: 5380'

PERFORATION RECORD

Zone		Perfs	SPF/#shots	Zone	Perfs		SPF/#shots
GB2 sds	new	4336-4360'	4/96	B .5 sds	5124-5128'	new	4/16
GB6 sds	new	4442-4450'	4/32	B1 sds	5154-5164'	new	4/40
GB6 sds	new	4456-4460'	4/16	A1 sds	5334-5344'	new	4/40
PB 11 sds	new	4676-4684'	4/32	A1 sds	5348-5352'	new	4/16
D sds	exist	4891-4897'	2/12	LDC sds	5558-5582'	new	4/96
D sds	exist	4899-4924'	2/50	CP .5 sds	5792-5796'	new	4/16
C sds	new	5046-5054'	4/32	CP 1 sds	5852-5860'	new	4/32
C sds	new	5068-5087'	4/76				

CHRONOLOGICAL OPERATIONS

Date Work Performed: 4-May-01 **SITP:** 0 **SICP:** 0

PU & set pkr @ 5472' W/ frac valve collar below pipe rams. RBP @ 5635'. RU BJ Services and frac LDC sds (5558-5582') dn 2 7/8 L-80 tbg W/ 118,659# 20/40 sand in 703 bbls Viking I-25 fluid. Treated @ ave press of 4460 psi W/ ave rate of 15.2 BPM. ISIP-3030 psi. Filled annulus & held 100-200 psi during frac. Used 160 BTF. RD BJ. Begin immediate flowback of LDC frac on 12/64 choke @ 1 BPM. Zone flowed 5 hrs & died. Rec 247 BTF (est 35% of frac load). Release pkr. Circ hole clean. TIH W/ RH, tbg sub, pkr & L-80 tbg. Tag sd @ 5630'. C/O sd to RBP @ 5635'. Release & re-set plug @ 5380'. Pull pkr to 5250'. Isolate A sds. Set pkr W/ frac valve sub beneath pipe rams. Breakdown A sds (5334-44' & 5348-52') @ 2800 psi. Establish injection rate of 4.5 BPM @ 1800 psi. Used 4 BW. Release pkr. SIFN W/ est 1217 BWTR.

FLUID RECOVERY (BBLS)

Starting fluid load to be recovered: 597 Starting oil rec to date: 0

Fluid lost/recovered today: 620 Oil lost/recovered today:

Ending fluid to be recovered: 1217 Cum oil recovered: 0

IFL: FFL: FTP: Choke: 12/64 Final Fluid Rate: Final oil cut:

STIMULATION DETAIL

Base Fluid used: Viking I-25 Job Type: Sand Frac

Company: BJ Services

Procedure or Equipment detail: LDC sands

7500 gals of pad

5750 gals W/ 1-5 ppg of 20/40 sand

11500 gals W/ 5-8 ppg of 20/40 sand

3414 gals W/ 8 ppg of 20/40 sand

Flush W/ 1344 gals of slick water

Pumped down 2 7/8 L-80 tbg

Max TP: 4899 Max Rate: 15.3 BPM Total fluid pmpd: 703 bbls

Avg TP: 4460 Avg Rate: 15.2 BPM Total Prop pmpd: 118,659#

ISIP: 3030 5 min: 10 min: 15 min:

Completion Supervisor: Gary Dietz

COSTS

Ross rig	$2,415
BOP	$130
BJ Services-LDC sds	$28,946
Fuel gas (+/- 30 mcf)	$180
Frac water	$100
Weatherford-service	$525
IPC Supervision	$200
DAILY COST:	$32,496
TOTAL WELL COST:	$77,230

Inland RESOURCES INC.

Attachment G-1
6 of 9

DAILY COMPLETION REPORT

WELL NAME: Wells Draw 8-5-9-16 **Report Date:** 5/8/01 **Day:** 06

Operation: Re-completion **Rig:** Ross #11

WELL STATUS

Surf Csg: 8 5/8 @ 307' Prod Csg: 5 1/2" 17# @ 2745' & 5 1/2" 15.5# f/ 2745' to 5991' Csg PBTD: 5955'

Tbg: Size: 2 7/8 Wt: 6.5# Grd: L-80 Pkr/EOT @: 5250' BP/Sand PBTD: 5380'

PERFORATION RECORD

Zone		Perfs	SPF/#shots	Zone	Perfs		SPF/#shots
GB2 sds	new	4336-4360'	4/96	B .5 sds	5124-5128'	new	4/16
GB6 sds	new	4442-4450'	4/32	B1 sds	5154-5164'	new	4/40
GB6 sds	new	4456-4460'	4/16	A1 sds	5334-5344'	new	4/40
PB 11 sds	new	4676-4684'	4/32	A1 sds	5348-5352'	new	4/16
D sds	exist	4891-4897'	2/12	LDC sds	5558-5582'	new	4/96
D sds	exist	4899-4924'	2/50	CP .5 sds	5792-5796'	new	4/16
C sds	new	5046-5054'	4/32	CP 1 sds	5852-5860'	new	4/32
C sds	new	5068-5087'	4/76				

CHRONOLOGICAL OPERATIONS

Date Work Performed: 7-May-01 **SITP:** 200 **SICP:** 300

PU & set pkr @ 5250' W/ frac valve collar below pipe rams. RBP @ 5380'. RU BJ Services and frac A sds (5334-5344'),(5348-5352') dn 2 7/8 L-80 tbg W/ 68020# 20/40 sand in 425 bbls Viking I-25 fluid. Treated @ ave press of 3200 psi W/ ave rate of 14.3 BPM. ISIP-2325 psi. Filled annulus & held 100-200 psi during frac. Used 80 BTF. RD BJ. Begin immediate flowback of A frac on 12/64 choke @ 1 BPM. Zone flowed 2 hrs & died. Rec 76 BTF (est 18% of frac load). SIFN W/ est 1646 BWTR.

FLUID RECOVERY (BBLS)

Starting fluid load to be recovered: 1217 Starting oil rec to date: 0

Fluid lost/recovered today: 429 Oil lost/recovered today:

Ending fluid to be recovered: 1646 Cum oil recovered: 0

IFL: FFL: FTP: Choke: 12/64 Final Fluid Rate: Final oil cut:

STIMULATION DETAIL

Base Fluid used: Viking I-25 Job Type: Sand Frac

Company: BJ Services

Procedure or Equipment detail: **A sands**

5000 gals of pad

3500 gals W/ 1-5 ppg of 20/40 sand

7000 gals W/ 5-8 ppg of 20/40 sand

1500 gals W/ 8 ppg of 20/40 sand

Flush W/ 1302 gals of slick water

Pumped down 2 7/8 L-80 tbg

.872 FG.

Max TP: 3570 Max Rate: 14.3 BPM Total fluid pmpd: 425 bbls

Avg TP: 3200 Avg Rate: 14.3 BPM Total Prop pmpd: 68,020#

ISIP: 2325 5 min: 10 min: 15 min:

Completion Supervisor: Pat Wisener

COSTS

Ross rig	$1,700
BOP	$130
BJ Services-A sds	$26,795
Fuel gas (+/- 30 mcf)	$180
Frac water	$100
Weatherford-service	$525
IPC Supervision	$200
DAILY COST:	$29,630
TOTAL WELL COST:	$106,860

Attachment G-1
7 of 9

Inland RESOURCES INC.

DAILY COMPLETION REPORT

WELL NAME: Wells Draw 8-5-9-16 **Report Date:** 5/9/01 **Day:** 07

Operation: Re-completion **Rig:** Ross #11

WELL STATUS

Surf Csg: 8 5/8 @ 307' Prod Csg: 5 1/2" 17# @ 2745' & 5 1/2" 15.5# f/ 2745' to 5991' Csg PBTD: 5955'

Tbg: Size: 2 7/8 Wt: 6.5# Grd: L-80 Pkr/EOT @: 4950' BP/Sand PBTD: 5210'

PERFORATION RECORD

Zone		Perfs	SPF/#shots	Zone	Perfs		SPF/#shots
GB2 sds	new	4336-4360'	4/96	B .5 sds	5124-5128'	new	4/16
GB6 sds	new	4442-4450'	4/32	B1 sds	5154-5164'	new	4/40
GB6 sds	new	4456-4460'	4/16	A1 sds	5334-5344'	new	4/40
PB 11 sds	new	4676-4684'	4/32	A1 sds	5348-5352'	new	4/16
D sds	exist	4891-4897'	2/12	LDC sds	5558-5582'	new	4/96
D sds	exist	4899-4924'	2/50	CP .5 sds	5792-5796'	new	4/16
C sds	new	5046-5054'	4/32	CP 1 sds	5852-5860'	new	4/32
C sds	new	5068-5087'	4/76				

Date Work Performed: 8-May-01 **SITP:** 0 **SICP:** 0

PU on tbg & release pkr @ 5250'. Circ hole clean. TIH W/ RH, pup, pkr & tbg. Tag sd @ 5348'. C/O sd to RBP @ 5380'. Release plug. Pull tools up. Isolate B1 sds. Unable to break perfs W/ 3400 psi (max pump output). Move tools & isolate B.5 sds. Unable to break perfs @ 3400 psi. Move tools & isolate C sds. Breakdn perfs @ 2800 psi. Inject into perfs @ 3.6 BPM @ 1900 psi. Release tools. Unable to get plug to go down hole. Circ by tools & try working plug dn hole--no success. TOH W/ tbg & tools. TIH W/ new 5 1/2" "TS" RBP, 2 3/8 tbg sub, 5 1/2" "HD" pkr & L-80 tbg. Isolate B.5 sds. RU BJ to tbg & breakdown perfs @ 4230 psi. Inject into perfs @ 3 BPM @ 2265 psi. Move tools & isolate B1 sds. RU BJ & breakdn perfs @ 4578 psi. Inject into perfs @ 3.1 BPM @ 1350 psi. Used 26 BW for breakdns. Release tools. Isolate B/C sds for frac W/ RBP @ 4210' & pkr @ 4950'. RU BJ and frac B/C sds W/ 176,760# 20/40 sand in 1037 bbls Viking I-25 fluid. Treated @ ave press of 4200 psi W/ ave rate of 17.7 BPM. ISIP 1950 psi. Filled annulus & held 300-400 psi during frac. Used 90 BW. RD BJ. Begin immediate flowback of B/C frac on 12/64 choke @ 1 BPM. Zone flowed 3 1/2 hrs & died. Rec 149 BTF (est 14% of frac load). SIFN W/ est 2650 BWTR.

Starting fluid load to be recovered: 1646 Starting oil rec to date: 0

Fluid lost/recovered today: 1004 Oil lost/recovered today:

Ending fluid to be recovered: 2650 Cum oil recovered: 0

IFL: FFL: FTP: Choke: 12/64 Final Fluid Rate: Final oil cut:

STIMULATION DETAIL

Base Fluid used: Viking I-25 Job Type: Sand Frac

Company: BJ Services

Procedure or Equipment detail: B/C sands

12500 gals of pad

9000 gals W/ 1-5 ppg of 20/40 sand

18000 gals W/ 5-8 ppg of 20/40 sand

2820 gals W/ 8 ppg of 20/40 sand

Flush W/ 1218 gals of slick water

Pumped down 2 7/8 L-80 tbg

Max TP: 5320 Max Rate: 18.1 BPM Total fluid pmpd: 1037 bbls

Avg TP: 4200 Avg Rate: 17.7 BPM Total Prop pmpd: 176,760#

ISIP: 1950 5 min: 10 min: 15 min:

Completion Supervisor: Gary Dietz

COSTS

Ross rig	$2,598
BOP	$130
BJ Services-B/C sds	$38,903
Fuel gas (+/- 45 mcf)	$270
Frac water	$200
Weatherford-tools/serv	$2,340
IPC Supervision	$200
DAILY COST:	$44,641
TOTAL WELL COST:	$151,501

Inland RESOURCES INC.

Attachment G-1
8 of 9

DAILY COMPLETION REPORT

WELL NAME: Wells Draw 8-5-9-16 **Report Date:** 5/10/01 **Day:** 08

Operation: Re-completion **Rig:** Ross #11

WELL STATUS

Surf Csg: 8 5/8 @ 307' Prod Csg: 5 1/2" 17# @ 2745' & 5 1/2" 15.5# f/ 2745' to 5991' Csg PBTD: 5955'

Tbg: Size: 2 7/8 Wt: 6.5# Grd: L-80 Pkr/EOT @: 4588' BP/Sand PBTD: 4740'

PERFORATION RECORD

Zone		Perfs	SPF/#shots	Zone	Perfs		SPF/#shots
GB2 sds	new	4336-4360'	4/96	B .5 sds	5124-5128'	new	4/16
GB6 sds	new	4442-4450'	4/32	B1 sds	5154-5164'	new	4/40
GB6 sds	new	4456-4460'	4/16	A1 sds	5334-5344'	new	4/40
PB 11 sds	new	4676-4684'	4/32	A1 sds	5348-5352'	new	4/16
D sds	exist	4891-4897'	2/12	LDC sds	5558-5582'	new	4/96
D sds	exist	4899-4924'	2/50	CP .5 sds	5792-5796'	new	4/16
C sds	new	5046-5054'	4/32	CP 1 sds	5852-5860'	new	4/32
C sds	new	5068-5087'	4/76				

CHRONOLOGICAL OPERATIONS

Date Work Performed: 9-May-01 **SITP:** 0 **SICP:** 0

PU on tbg--release pkr. Circ hole clean. TIH W/ RH, pup jt, pkr & tbg. Tag sd @ 5140'. C/O sd to RBP @ 5210'. Release plug. Pull plug up & reset @ 4740'. Set pkr above & press test plug to 3000 psi. Move pkr up & reset @ 4588' W/ frac valve collar below pipe rams (isolate PB11 sds). RU BJ Services and frac PB sds W/ 48,200# 20/40 sand in 324 bbls Viking I-25 fluid. Perfs broke dn @ 2231 psi. Treated @ ave press of 3500 psi W/ ave rate of 16.2 BPM. ISIP-2230 psi. Used 60 BW filling annulus & holding 300-400 psi on csg during frac. RD BJ. Begin immediate flowback of PB frac on 12/64 choke @ 1 BPM. Zone flowed 4 hrs & died. Rec 179 BTF (est 55% of frac load). SIFN W/ est 2855 BWTR.

FLUID RECOVERY (BBLS)

Starting fluid load to be recovered: 2650 Starting oil rec to date: 0

Fluid lost/recovered today: 205 Oil lost/recovered today:

Ending fluid to be recovered: 2855 Cum oil recovered: 0

IFL: FFL: FTP: Choke: 12/64 Final Fluid Rate: Final oil cut:

STIMULATION DETAIL

Base Fluid used: Viking I-25 Job Type: Sand Frac

Company: BJ Services

Procedure or Equipment detail: **PB 11 sands**

3600 gals of pad

2500 gals W/ 1-5 ppg of 20/40 sand

5000 gals W/ 5-8 ppg of 20/40 sand

1362 gals W/ 8 ppg of 20/40 sand

Flush W/ 1134 gals of slick water

Pumped down 2 7/8 L-80 tbg

Max TP: 4670 Max Rate: 16.2 BPM Total fluid pmpd: 324 bbls

Avg TP: 3500 Avg Rate: 16.2 BPM Total Prop pmpd: 48,200#

ISIP: 2230 5 min: 10 min: Frac grad. .91

Completion Supervisor: Gary Dietz

COSTS

Ross rig	$1,695
BOP	$130
BJ Services-PB sds	$23,495
Fuel gas (+/- 30 mcf)	$180
Frac water	$100
Weatherford-service	$525
IPC Supervision	$200
DAILY COST:	$26,325
TOTAL WELL COST:	$177,826

Inland RESOURCES INC.

Attachment G-1
9 of 9

DAILY COMPLETION REPORT

WELL NAME: Wells Draw 8-5-9-16 **Report Date:** 5/11/01 **Day:** 09

Operation: Re-completion **Rig:** Ross #11

WELL STATUS

Surf Csg: 8 5/8 @ 307' Prod Csg: 5 1/2" 17# @ 2745' & 5 1/2" 15.5# f/ 2745' to 5991' Csg PBTD: 5955'

Tbg: Size: 2 7/8 Wt: 6.5# Grd: L-80 Pkr/EOT @: 0 BP/Sand PBTD: 4504'

PERFORATION RECORD

Zone		Perfs	SPF/#shots	Zone	Perfs		SPF/#shots
GB2 sds	new	4336-4360'	4/96	B .5 sds	5124-5128'	new	4/16
GB6 sds	new	4442-4450'	4/32	B1 sds	5154-5164'	new	4/40
GB6 sds	new	4456-4460'	4/16	A1 sds	5334-5344'	new	4/40
PB 11 sds	new	4676-4684'	4/32	A1 sds	5348-5352'	new	4/16
D sds	exist	4891-4897'	2/12	LDC sds	5558-5582'	new	4/96
D sds	exist	4899-4924'	2/50	CP .5 sds	5792-5796'	new	4/16
C sds	new	5046-5054'	4/32	CP 1 sds	5852-5860'	new	4/32
C sds	new	5068-5087'	4/76				

CHRONOLOGICAL OPERATIONS

Date Work Performed: 10-May-01 **SITP:** 250 **SICP:** 0

Bleed tbg off--rec est 6 BTF. PU on tbg--release pkr. Circ hole clean. TIH W/ RH, pup jt, pkr & tbg. Tag sd @ 4680'. C/O sd to RBP @ 4720'. Release plug. Pull plug up & reset @ 4504'. Set pkr above & press test plug to 3000 psi. Reset pkr @ 4396'. Breakdn perfs 4442' through 4460' (dn tbg) @ 2200 psi. Inject into perfs @ 3.5 BPM @ 1900 psi. Breakdn perfs 4336-60' (dn csg) @ 1600 psi. Inject into perfs @ 1.25 BPM @ 1000 psi. Used 4 BW during C/O & breakdowns. Release pkr. TOH W/ tbg--LD pkr. RU BJ Services and frac GB sds (dn csg) W/ 152,820# 20/40 sand in 1010 bbls Viking I-25 fluid. Treated @ ave press of 2000 psi W/ ave rate of 30 BPM. ISIP-2230 psi. RD BJ. Begin immediate flowback of GB frac on 12/64 choke @ 1 BPM. Zone flowed 6 hrs & died. Rec 297 BTF (est 29% of frac load). SIFN W/ est 3566 BWTR.

FLUID RECOVERY (BBLS)

Starting fluid load to be recovered: 2855 Starting oil rec to date: 0

Fluid lost/recovered today: 711 Oil lost/recovered today:

Ending fluid to be recovered: 3566 Cum oil recovered: 0

IFL: FFL: FTP: Choke: 12/64 Final Fluid Rate: Final oil cut:

STIMULATION DETAIL

Base Fluid used: Viking I-25 Job Type: Sand Frac

Company: BJ Services

Procedure or Equipment detail: GB sands

11000 gals of pad

7500 gals W/ 1-5 ppg of 20/40 sand

15000 gals W/ 5-8 ppg of 20/40 sand

4653 gals W/ 8 ppg of 20/40 sand

Flush W/ 4263 gals of slick water

Max TP: 2481 Max Rate: 30 BPM Total fluid pmpd: 1010 bbls

Avg TP: 2000 Avg Rate: 30 BPM Total Prop pmpd: 152,820#

ISIP: 5 min: 10 min: Frac grad. .94

Completion Supervisor: Gary Dietz

COSTS

Ross rig	$2,500
BOP	$130
BJ Services-GB sds	$36,550
Fuel gas (+/- 45 mcf)	$270
Frac water	$100
Weatherford-service	$525
Frac tks (4 X 9 days)	$1,440
Frac valve rental	$1,500
Frac tbg rental	$3,954
Float rental (9days)	$270
IPC Supervision	$200
DAILY COST:	$47,439
TOTAL WELL COST:	$225,265

ATTACHMENT H

WORK PROCEDURE FOR PLUGGING AND ABANDONMENT

1.		Set CIBP @ 4286'.
2.	Plug #1	Set 100' plug on top of CIBP using 12 sx Class "G" cement.
3.	Plug #2	Set 200' plug from 2000'-2200' with 25 sx Class "G" cement.
4.	Plug #3	Pump 42 sx Class "G" cement down 5-1/2" casing to 357'.

The approximate cost to plug and abandon this well is $35,401.

Attachment H-1

Wells Draw #8-5-9-16

Spud Date: 3/21/00
Put on Production: 4/21/00
Re-completed: 5/1/01
GL: 5776' KB: 5786' 10' KB

Initial Production: 80 BOPD, 96 MCFD, 15 BWPD
Re-completion: 35.4 BOPD, 35 MCFG, 35 BWPD

SURFACE CASING

CSG SIZE: 8-5/8"
GRADE: J-55
WEIGHT: 24#
LENGTH: 7 JTS (309.87')
DEPTH LANDED: 307.47' KB
HOLE SIZE: 12-1/4"
CEMENT DATA: 141 sx Class "G" cmt.

PRODUCTION CASING

CSG SIZE: 5-1/2"
GRADE: J-55
WEIGHT: 17# and 15.5#
LENGTH: 144 jts (5993.87')
HOLE SIZE: 7-7/8"
SET AT: 5991.47' KB
CEMENT DATA: 265 sx Prem Lite II, 400 sx 50/50 Pozmix
CEMENT TOP AT: Above 200' per CBL

Proposed P & A
Wellbore Diagram

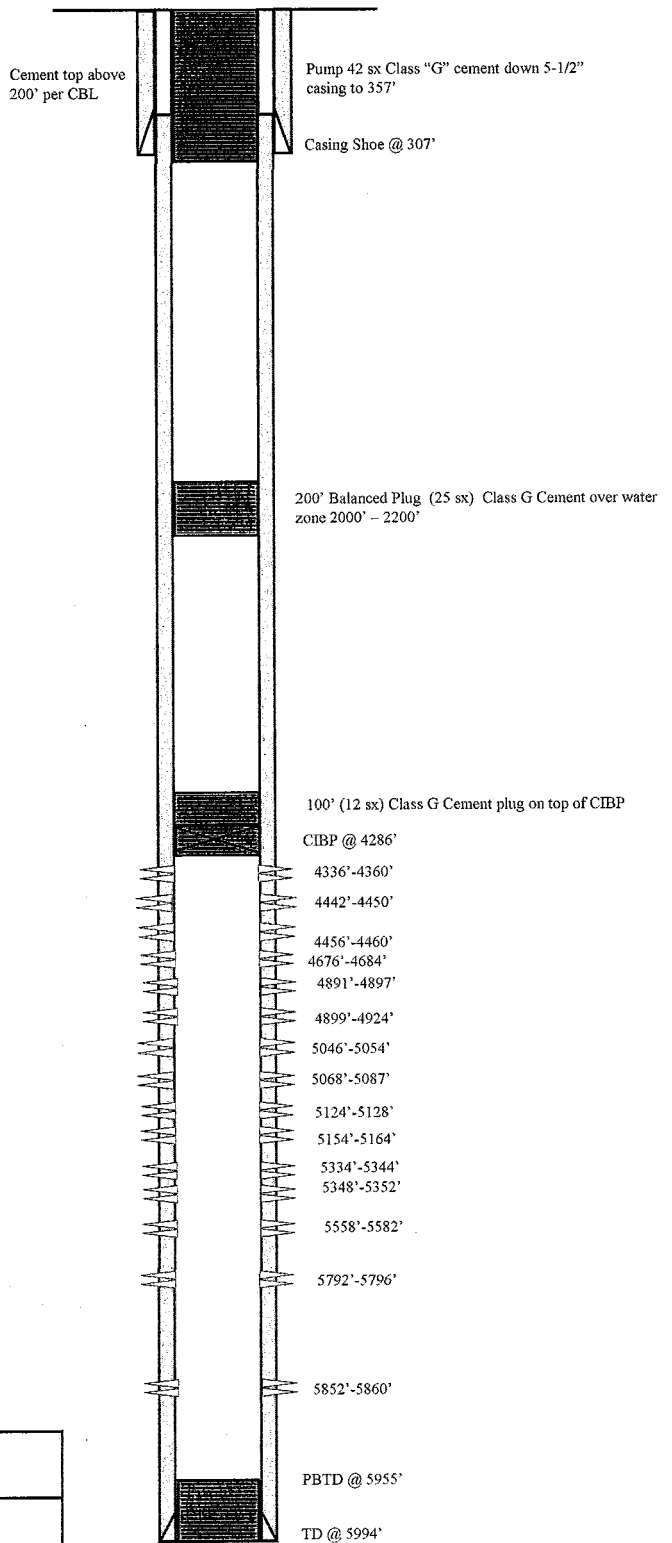

NEWFIELD

Wells Draw #8-5-9-16

1809' FNL & 587' FEL

SE/NE Section 5-T9S-R16E

Duchesne Co, Utah

API #43-013-32132; Lease #UTU-30096

CT 2/28/08

FORM 3160-5
(September 2001)

UNITED STATES
DEPARTMENT OF THE INTERIOR
BUREAU OF LAND MANAGEMENT

FORM APPROVED
OMB No. 1004-0135
Expires January 31,2004

SUNDRY NOTICES AND REPORTS ON WELLS

Do not use this form for proposals to drill or to re-enter an abandoned well. Use Form 3160-3 (APD) for such proposals.

SUBMIT IN TRIPLICATE - Other Instructions on reverse side

5. Lease Serial No.
USA UTU-30096

6. If Indian, Allottee or Tribe Name.

7. If Unit or CA/Agreement, Name and/or
WELLS DRAW UNIT

1. Type of Well
☒ Oil Well ☐ Gas Well ☐ Other

8. Well Name and No.
WELLS DRAW 8-5-9-16

2. Name of Operator
NEWFIELD PRODUCTION COMPANY

9. API Well No.
4301332132

3a. Address Route 3 Box 3630
Myton, UT 84052

3b. Phone *(include are code)*
435.646.3721

10. Field and Pool, or Exploratory Area
MONUMENT BUTTE

4. Location of Well *(Footage, Sec., T., R., M., or Survey Description)*
1809 FNL 587 FEL
SENE Section 5 T9S R16E

11. County or Parish, State
DUCHESNE, UT

12. CHECK APPROPRIATE BOX(ES) TO INIDICATE NATURE OF NOTICE, OR OTHER DATA

TYPE OF SUBMISSION	TYPE OF ACTION			
☒ Notice of Intent	☐ Acidize	☐ Deepen	☐ Production(Start/Resume)	☐ Water Shut-Off
☐ Subsequent Report	☐ Alter Casing	☐ Fracture Treat	☐ Reclamation	☐ Well Integrity
☐ Final Abandonment	☐ Casing Repair	☐ New Construction	☐ Recomplete	☐ Other _____
	☐ Change Plans	☐ Plug & Abandon	☐ Temporarily Abandon	
	☒ Convert to	☐ Plug Back	☐ Water Disposal	

13. Describe Proposed or Completed Operation (clearly state all pertinent details, including estimated starting date of any proposed work and approximate duration thereof. If the proposal is to deepen directionally or recomplete horizontally, give subsurface locations and measured and true vertical depths of all pertinent markers and zones. Attach the Bond under which the work will be performed or provide the Bond No. on file with BLM/BIA. Required subsequent reports shall be filed within 30 days following completion of the involved operations. If the operation results in a multiple completion or recompletion in a new interval, a Form 3160-4 shall be filed once testing has been completed. Final Abandonment Notices shall be filed only after all requirements, including reclamation, have been completed, and the operator has determined that the site is ready for final inspection.)

Newfield Production proposes to convert the above mentioned well from a producing oil well to an injection well.

I hereby certify that the foregoing is true and correct *(Printed/ Typed)*
Eric Sundberg

Title
Regulatory Analyst

Signature

Date
3/4/08

THIS SPACE FOR FEDERAL OR STATE OFFICE USE

Approved by

Title

Date

Conditions of approval, if any, are attached. Approval of this notice does not warrant or certify that the applicant holds legal or equitable title to those rights in the subject lease which would entitle the applicant to conduct operations thereon.

Office

Title 18 U.S.C. Section 1001 and Title 43 U.S.C. Section 1212, make it a crime for any person knowingly and willfully to make to any department or agency of the United States any false, fictitious and fraudulent statements or representations as to any matter within its jurisdiction

(Instructions on reverse)

STATE OF UTAH
DEPARTMENT OF NATURAL RESOURCES
DIVISION OF OIL, GAS AND MINING

5. LEASE DESIGNATION AND SERIAL NUMBER: USA UTU-30096

SUNDRY NOTICES AND REPORTS ON WELLS

6. IF INDIAN, ALLOTTEE OR TRIBE NAME:

Do not use this form for proposals to drill new wells, significantly deepen existing wells below current bottom-hole depth, reenter plugged wells, or to drill horizontal laterals. Use APPLICATION FOR PERMIT TO DRILL form for such proposals.

7. UNIT or CA AGREEMENT NAME: WELLS DRAW UNIT

1. TYPE OF WELL: OIL WELL [X] GAS WELL [ ] OTHER

8. WELL NAME and NUMBER: WELLS DRAW 8-5-9-16

2. NAME OF OPERATOR: NEWFIELD PRODUCTION COMPANY

9. API NUMBER: 4301332132

3. ADDRESS OF OPERATOR: Route 3 Box 3630 CITY Myton STATE UT ZIP 84052 PHONE NUMBER 435.646.3721

10. FIELD AND POOL, OR WILDCAT: MONUMENT BUTTE

4. LOCATION OF WELL:

FOOTAGES AT SURFACE: 1809 FNL 587 FEL COUNTY: DUCHESNE

OTR/OTR. SECTION. TOWNSHIP. RANGE. MERIDIAN: SENE, 5, T9S, R16E STATE: UT

11. CHECK APPROPRIATE BOXES TO INDICATE NATURE OF NOTICE, REPORT, OR OTHER DATA

TYPE OF SUBMISSION	TYPE OF ACTION		
[ ] NOTICE OF INTENT (Submit in Duplicate)	[ ] ACIDIZE	[ ] DEEPEN	[ ] REPERFORATE CURRENT FORMATION
Approximate date work will	[ ] ALTER CASING	[ ] FRACTURE TREAT	[ ] SIDETRACK TO REPAIR WELL
	[ ] CASING REPAIR	[ ] NEW CONSTRUCTION	[ ] TEMPORARITLY ABANDON
	[ ] CHANGE TO PREVIOUS PLANS	[ ] OPERATOR CHANGE	[ ] TUBING REPAIR
	[ ] CHANGE TUBING	[ ] PLUG AND ABANDON	[ ] VENT OR FLAIR
[X] SUBSEQUENT REPORT (Submit Original Form Only)	[ ] CHANGE WELL NAME	[ ] PLUG BACK	[ ] WATER DISPOSAL
Date of Work Completion:	[X] CHANGE WELL STATUS	[ ] PRODUCTION (START/STOP)	[ ] WATER SHUT-OFF
	[ ] COMMINGLE PRODUCING FORMATIONS	[ ] RECLAMATION OF WELL SITE	[ ] OTHER: -
01/30/2009	[X] CONVERT WELL TYPE	[ ] RECOMPLETE - DIFFERENT FORMATION	

12. DESCRIBE PROPOSED OR COMPLETED OPERATIONS. Clearly show all pertinent details including dates, depths, volumes, etc.

On 2/2/09 Dennis Ingram with the State of Utah (DOGM) was contacted concerning the MIT on the above listed well. Permission was given at that time to perform the test on 2/4/09. On 2/4/09 the csg was pressured up to 1450 psig and charted for 30 minutes with no pressure loss. The well was not injecting during the test. The tbg pressure was 200 psig during the test. There was not a State representative available to witness the test.

API # 43-013-32132

NAME (PLEASE PRINT) Callie Ross TITLE Production Clerk

SIGNATURE Callie Ross DATE 02/09/2009

(This space for State use only)

RECEIVED
FEB 10 2009
DIV. OF OIL, GAS & MINING

Mechanical Integrity Test
Casing or Annulus Pressure Test

Inland Production Company
Rt. 3 Box 3630
Myton, UT 84052
435-646-3721

Witness: _____ **Date** 2/4/09 **Time** 2:00 am pm

Test Conducted by: Gordon Womack

Others Present: _____

Well: Wells Draw 8-5-9-16 **Field:** Monument Butte

Well Location: SE/NE Sec 5 T9S R16E Duchesne County UT **API No:** 43-013-32132

Time	Casing Pressure	
0 min	1450	psig
5	1450	psig
10	1450	psig
15	1450	psig
20	1450	psig
25	1450	psig
30 min	1450	psig
35		psig
40		psig
45		psig
50		psig
55		psig
60 min		psig

Tubing pressure: 200 psig

Result: Pass Fail

Signature of Witness: _____

Signature of Person Conducting Test: [signature]

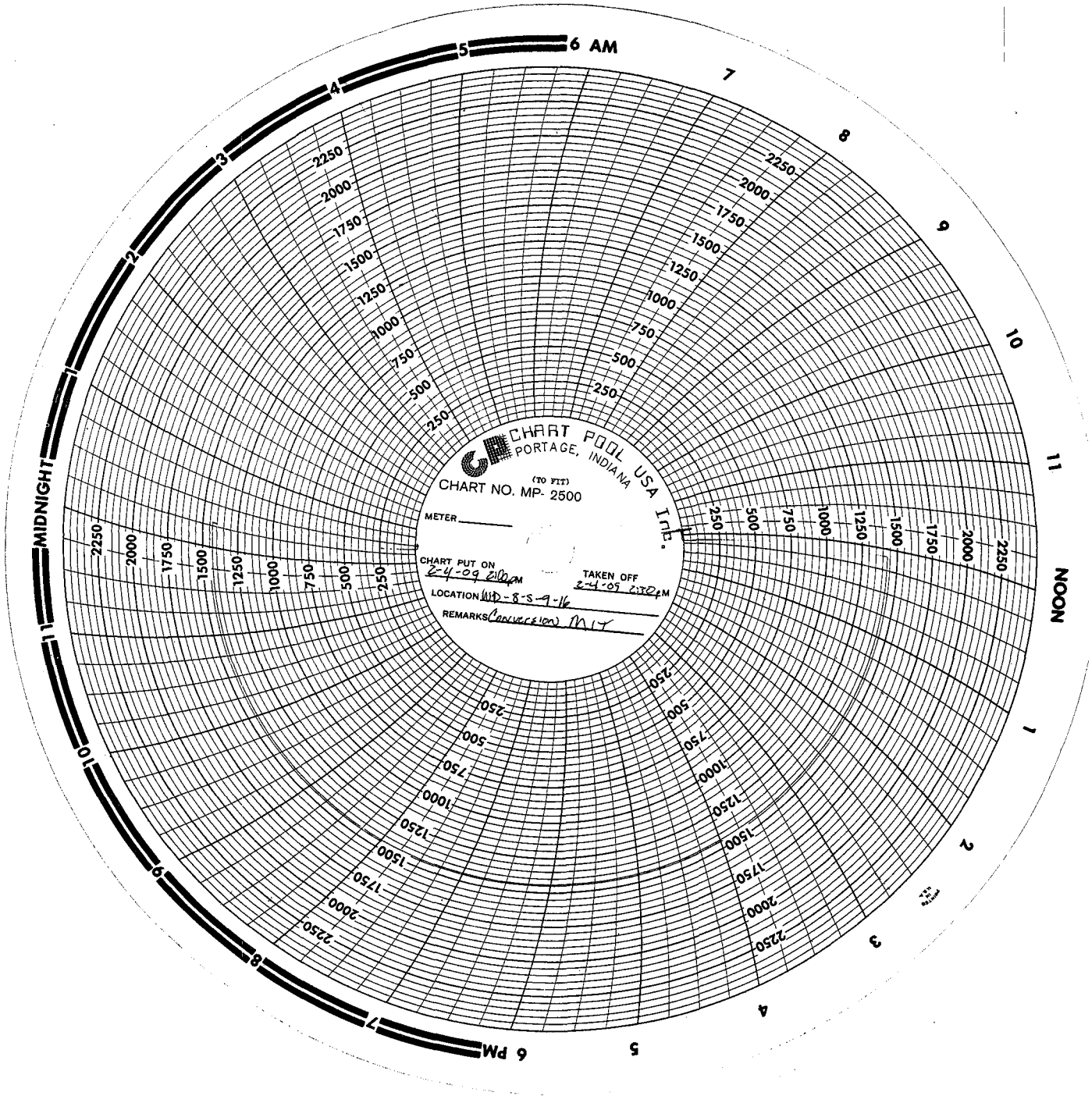
CHART POOL USA Inc.
PORTAGE, INDIANA
(TO FIT)
CHART NO. MP- 2500
METER
CHART PUT ON
TAKEN OFF
LOCATION
REMARKS
MIDNIGHT
NOON
6 AM
6 PM

WELLS DRW 8-5-9-16

12/1/2008 To 4/28/2009

1/29/2009 Day: 1 **Conversion**

Stone #5 on 1/28/2009 - MIRU Stone #5. RU HO trk & pump 70 BW dn annulus @ 250°F. RD pumping unit & PU on rod string. Did not see pump unseat. Try screwing back into rod string. PU on string & acts the same. RU HO trk to flush tbg--pressures up. LD 10 rods & try flushing again W/ no success. LD rod string. Had valve rod bushing--no pump. RU HO trk & pump 60 BW dn annulus @ 250°F. RU Perforators LLC & perf 2 holes in tbg above SN. RD WLT. RU HO trk & flush tbg W/ 50 BW @ 250°F. ND wellhead & release TA @ 5745'. NU BOP. SIFN.

1/30/2009 Day: 2 **Conversion**

Stone #5 on 1/29/2009 - TOH W/ production tbg. Broke each connection, clean & inspect pins and apply Liquid O-ring to pins. LD btm 49 jts tbg and BHA (rod pump stuck in SN). MU & TIH W/ injection string as follows: new Weatherford 5 1/2" Arrowset 1-X pkr (W/ W.L. re-entry guide & hardened steel slips), new SN (W/ standing valve in place) & 77 jts tbg. RU HO trk & pressure test to 3500 psi. Having slow leakoff--bleeding gas/air off. SIFN.

1/31/2009 Day: 3 **Conversion**

Stone #5 on 1/30/2009 - Thaw tbg stump W/ HO trk. Re-pressure test tbg to 3500 psi--holding. RIH W/ remainder of injection string. Fill & test to 3000 psi. Held solid for 30 minutes. Retrieve standing valve W/ overshot on sandline. ND BOP & land tbg on flange. Mix 15 gals Multi-Chem C-6031 & 5 gals B-8625 in 70 bbls fresh wtr. RU HO trk & pump dn annulus @ 90°F. PU on tbg & set pkr W/ SN @ 4308', CE @ 4312' & EOT @ 4316'. Land tbg W/ 16,000# tension. NU wellhead. Pressure test casing & pkr to 1400 psi. Held solid for 30 minutes. RDMOSU. Well ready for MIT.

2/5/2009 Day: 4 **Conversion**

Rigless on 2/4/2009 - On 2/2/09 Dennis Ingram with the State of Utah DOGM was contacted concerning the MIT on the above listed well (WD 8-5-9-16). Permission was given at that time to perform the test on 2/4/09. On 2/4/09 the csg was pressured up to 1450 psig and charted for 30 minutes with no pressure loss. The well was not injecting during the test . The tbg pressure was 200 psig during the test. There was not a State representative available to witness the test. API # 43-013-32132

DIVISION OF OIL, GAS AND MINING
UNDERGROUND INJECTION CONTROL PROGRAM
PERMIT
STATEMENT OF BASIS

Applicant: Newfield Production Company **Well:** Wells Draw 8-5-9-16

Location: 5/9S/16E **API:** 43-013-32132

Ownership Issues: The proposed well is located on Federal land. The well is located in the Wells Draw Unit. Lands in the one-half mile radius of the well are administered by the BLM and State of Utah. The Federal Government and the State of Utah are the mineral owners within the area of review. Newfield and other various individuals hold the leases in the unit. Newfield has provided a list of all surface, mineral and lease holders in the half-mile radius. Newfield is the operator of the Wells Draw Unit. Newfield has submitted an affidavit stating that all owners and interest owners have been notified of their intent.

Well Integrity: The proposed well has surface casing set at 308 feet and has a cement top at the surface. A 5½ inch production casing is set at 5,992 feet. A cement bond log demonstrates adequate bond in this well up to 2,876 feet. A 2 7/8 inch tubing with a packer will be set at 4,301 feet. Higher perforations will be opened at a later date. A mechanical integrity test will be run on the well prior to injection. There are 7 producing wells, 5 injection wells and 2 shut-in wells in the area of review. All of the wells have evidence of adequate casing and cement. No other corrective action will be required.

Ground Water Protection: According to Technical Publication No. 92 the base of moderately saline water is approximately 776 feet. Injection shall be the interval between 4,192 feet and 6,014 feet in the Green River Formation. Information submitted by Newfield indicates that the fracture gradient for the 8-5-9-16 well is .79 psi/ft which was the lowest reported fracture gradient for the injection zone. The resulting minimum fracture pressure for the proposed injection interval is 1,917 psig. The requested maximum pressure is 1,917 psig. The anticipated average injection pressure is 1100 psig. Injection at this pressure should not initiate any new fractures or propagate existing fractures in the adjacent confining intervals. Any ground water present should be adequately protected.

Oil/Gas& Other Mineral Resources Protection: The Board of Oil, Gas & Mining approved the Wells Draw Unit December 1, 1993. Correlative rights issues were addressed at that time. Previous reviews in this area indicate that other mineral resources in the area have been protected or are not at issue.

Bonding: Bonded with the BLM.

Actions Taken and Further Approvals Needed: A notice of agency action has been sent to the Salt Lake Tribune and the Uinta Basin Standard. A casing/tubing pressure test will be required prior to injection. It is recommended that approval of this application be granted.

Note: Applicable technical publications concerning water resources in the general vicinity of this project have been reviewed and taken into consideration during the permit review process.

Reviewer(s): Clinton Dworshak Date 04/23/2008

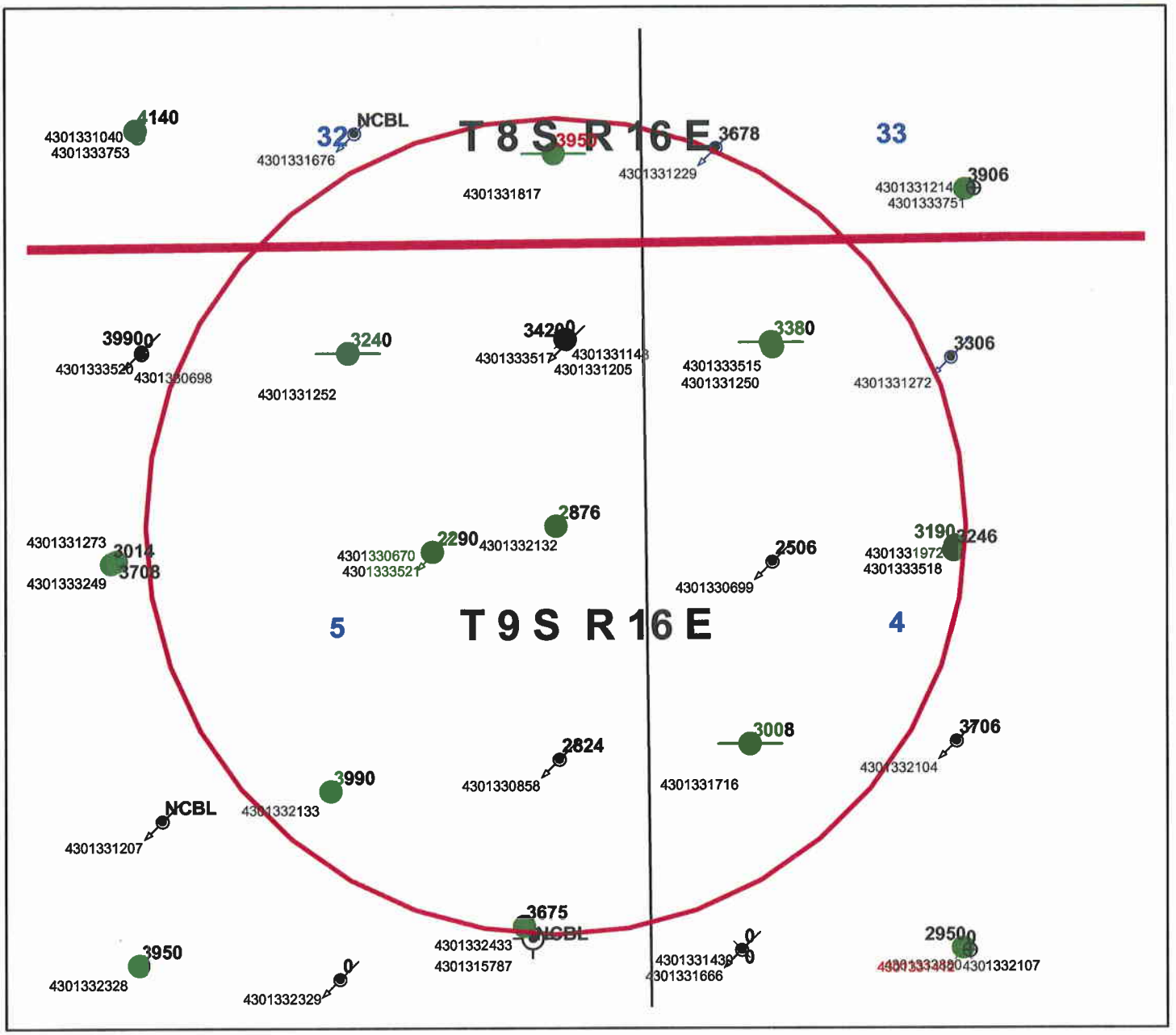

Wells Draw 8-5-9-16

Legend

wells point

WELLTYPE

- GIW
- GSW
- LA
- LOC
- PA
- PGW
- POW
- SGW
- SOW
- TA
- TW
- WDW
- WIW
- WSW

N

0 0.4 Miles

NOTICE OF AGENCY ACTION
BEFORE THE DIVISION OF OIL, GAS AND MINING
DEPARTMENT OF NATURAL RESOURCES
STATE OF UTAH
CAUSE NO. UIC 346

IN THE MATTER OF THE APPLICATION OF NEWFIELD EXPLORATION COMPANY FOR ADMINISTRATIVE APPROVAL OF THE MONUMENT BUTTE 10-25-8-16, MONUMENT BUTTE 16-25-8-16 WELLS LOCATED IN SECTION 25; GAVILAN STATE 22-32-8-16, STATE 33-32-8-16, WELLS LOCATED IN SECTION 32; WELLS DRAW FEDERAL 24-33-8-16 WELL LOCATED IN SECTION 33, MONUMENT BUTTER 8-35-8-16 WELL LOCATED IN SECTION 35, MONUMENT BUTTER 6-36-8-16 WELL LOCATED IN SECTION 36, TOWNSHIP 8 SOUTH, RANGE 16 EAST; WELLS DRAW 8-5-9-16 WELL LOCATED IN SECTION 5 TOWNSHIP 9 SOUTH, RANGE 16 EAST, DUCHESNE COUNTY, UTAH, AS CLASS II INJECTION WELLS.

THE STATE OF UTAH TO ALL PERSONS INTERESTED IN THE ABOVE ENTITLED MATTER.

Notice is hereby given that the Division of Oil, Gas and Mining (the "Division") is commencing an informal adjudicative proceeding to consider the application of the Newfield Exploration Company for administrative approval of the Monument Butte 10-25-8-16 well, located in NW/4 Se/4 Section 25, Monument Butte 16-25-8-16 well, located SE/4 SE/4 in Section 25, Gavilan State 22-32-8-16 well, located in SE/4 NW/4 Section 32, State 33-32-8-16 well, located in NE/4 SE/4 Section 32, Wells Draw Federal 24-33-8-16 well, located in SE/4 SW/4 Section 33, Monument Butte 8-35-8-16 well, located in SE/4 NE/4 Section 35, Monument Butte 6-36-8-16 well, located in SE/4 NW/4 Section 36, Wells Draw 8-5-9-16 well, located in SE/4 NE/4 Section 5, Salt Lake Meridian, Duchesne, Utah, for conversion to a Class II injection well. These wells are located in the Monument Butte and Wells Draw Units respectively. The adjudicative proceedings will be conducted informally according to Utah Admin. Rule R649-10, Administrative Procedures.

Selective zones in the Green River Formation will be used for water injection. The maximum requested injection pressure and rate will be determined on each individual well based on fracture gradient information submitted by Newfield Exploration Company.

Any person desiring to object to the proposed application or otherwise intervene in the proceeding, must file a written protest or notice of intervention with the Division within fifteen days following publication of this notice. The Division's Presiding Officer for the proceeding is Gil Hunt, Associate Director, at P.O. Box 145801, Salt Lake City, Utah 84114-5801, phone number (801) 538-5340. If such a protest or notice of intervention is received, a hearing will be scheduled in accordance with the aforementioned administrative procedure rule. Protestants and/or interveners should be prepared to demonstrate at the hearing how this matter affects their interests.

Dated this 21st day of March, 2008

STATE OF UTAH
DIVISION OF OIL, GAS & MINING

/s/ Gil Hunt
Associate Director

261164 UPAXLP

NOTICE OF AGENCY ACTION CAUSE NO. UIC 346

BEFORE THE DIVISION OF OIL, GAS AND MINING

DEPARTMENT OF NATURAL RESOURCES

STATE OF UTAH

THE STATE OF UTAH TO ALL PERSONS INTERESTED IN THE ABOVE ENTITLED MATTER.

Notice is hereby given that the Division of Oil, Gas and Mining (the "Division") is commencing an informal adjudicative proceeding to consider the application of the Newfield Exploration Company for administrative approval of the Monument Butte 10-25-8-16 well, located in NW/4 Se/4 Section 25, Monument Butte 16-25-8-16 well, located SE/4 SE/4 in Section 25, Gavilan State 22-32-8-16 well, located in SE/4 NW/4 Section 32, State 33-32-8-16 well, located in NE/4 SE/4 Section 32, Wells Draw Federal 24-33-8-16 well, located in SE/4 SW/4 Section 33, Monument Butte 8-35-8-16 well, located in SE/4 NE/4 Section 35, Monument Butte 6-36-8-16 well, located in SE/4 NW/4 Section 36, Wells Draw 8-5-9-16 well, located in SE/4 NE/4 Section 5, Salt Lake Meridian, Duchesne, Utah, for conversion to a Class II injection well. These wells are located in the Monument Butte and Wells Draw Units respectively. The adjudicative proceedings will be conducted informally according to Utah Admin. Rule R649-10, Administrative Procedures.

Selective zones in the Green River Formation will be used for water injection. The maximum requested injection pressure and rate will be determined on each individual well based on fracture gradient information submitted by Newfield Exploration Company.

Any person desiring to object to the proposed application or otherwise intervene in the proceeding, must file a written protest or notice of intervention with the Division within fifteen days following publication of this notice. The Division's Presiding Officer for the proceeding is Gil Hunt, Associate Director, at P.O. Box 145801, Salt Lake City, Utah 84114-5801, phone number (801) 538-5340. If such a protest or notice of intervention is received, a hearing will be scheduled in accordance with the aforementioned administrative procedure rule. Protestants and/or interveners should be prepared to demonstrate at the hearing how this matter affects their interests.

Dated this 21st day of March, 2008

STATE OF UTAH

DIVISION OF OIL, GAS & MINING

Gil Hunt

Associate Director

Published in the Uintah Basin Standard March 25, 2008.

STATE OF UTAH
DEPARTMENT OF NATURAL RESOURCES
DIVISION OF OIL, GAS AND MINING

5. LEASE DESIGNATION AND SERIAL NUMBER: USA UTU-30096

SUNDRY NOTICES AND REPORTS ON WELLS

6. IF INDIAN, ALLOTTEE OR TRIBE NAME:

Do not use this form for proposals to drill new wells, significantly deepen existing wells below current bottom-hole depth, reenter plugged wells, or to drill horizontal laterals. Use APPLICATION FOR PERMIT TO DRILL form for such proposals.

7. UNIT or CA AGREEMENT NAME: WELLS DRAW UNIT

1. TYPE OF WELL: OIL WELL [x] GAS WELL [ ] OTHER

8. WELL NAME and NUMBER: WELLS DRAW 8-5-9-16

2. NAME OF OPERATOR: NEWFIELD PRODUCTION COMPANY

9. API NUMBER: 4301332132

3. ADDRESS OF OPERATOR: Route 3 Box 3630 CITY Myton STATE UT ZIP 84052 PHONE NUMBER 435.646.3721

10. FIELD AND POOL, OR WILDCAT: MONUMENT BUTTE

4. LOCATION OF WELL:

FOOTAGES AT SURFACE: 1809 FNL 587 FEL COUNTY: DUCHESNE

OTR/OTR. SECTION. TOWNSHIP. RANGE. MERIDIAN: SENE, 5, T9S, R16E STATE: UT

11. CHECK APPROPRIATE BOXES TO INDICATE NATURE OF NOTICE, REPORT, OR OTHER DATA

TYPE OF SUBMISSION	TYPE OF ACTION		
[x] NOTICE OF INTENT (Submit in Duplicate)	[ ] ACIDIZE	[ ] DEEPEN	[ ] REPERFORATE CURRENT FORMATION
Approximate date work will	[ ] ALTER CASING	[ ] FRACTURE TREAT	[ ] SIDETRACK TO REPAIR WELL
04/10/2009	[ ] CASING REPAIR	[ ] NEW CONSTRUCTION	[ ] TEMPORARITLY ABANDON
	[ ] CHANGE TO PREVIOUS PLANS	[ ] OPERATOR CHANGE	[ ] TUBING REPAIR
	[ ] CHANGE TUBING	[ ] PLUG AND ABANDON	[ ] VENT OR FLAIR
[x] SUBSEQUENT REPORT (Submit Original Form Only)	[ ] CHANGE WELL NAME	[ ] PLUG BACK	[ ] WATER DISPOSAL
	[ ] CHANGE WELL STATUS	[ ] PRODUCTION (START/STOP)	[ ] WATER SHUT-OFF
Date of Work Completion:	[ ] COMMINGLE PRODUCING FORMATIONS	[ ] RECLAMATION OF WELL SITE	[x] OTHER: - Change status, put well on injection.
	[ ] CONVERT WELL TYPE	[ ] RECOMPLETE - DIFFERENT FORMATION	

12. DESCRIBE PROPOSED OR COMPLETED OPERATIONS. Clearly show all pertinent details including dates, depths, volumes, etc.

The above reference well was put on injection at 10:00 AM on 4-10-09.

NAME (PLEASE PRINT) Kathy Chapman TITLE Office Manager

SIGNATURE Kathy Chapman DATE 04/13/2009

(This space for State use only)

RECEIVED
APR 14 2009
DIV. OF OIL, GAS & MINING

JON M. HUNTSMAN, JR.
Governor

GARY R. HERBERT
Lieutenant Governor

State of Utah
DEPARTMENT OF NATURAL RESOURCES

MICHAEL R. STYLER
Executive Director

Division of Oil Gas and Mining

JOHN R. BAZA
Division Director

UNDERGROUND INJECTION CONTROL PERMIT

Cause No. UIC-346

Operator: Newfield Production Company

Well: Wells Draw 8-5-9-16

Location: Section 5, Township 9 South, Range 16 East

County: Duchesne

API No.: 43-013-32132

Well Type: Enhanced Recovery (waterflood)

Stipulations of Permit Approval

1. Approval for conversion to Injection Well issued on May 6, 2008.
2. Maximum Allowable Injection Pressure: 1,917 psig
3. Maximum Allowable Injection Rate: (restricted by pressure limitation)
4. Injection Interval: Green River Formation (4,192' - 6,014')

Approved by: Gil Hunt — Date: 3-18-09

Gil Hunt
Associate Director

cc: Bruce Suchomel, Environmental Protection Agency
Bureau of Land Management, Vernal
Eric Sundberg, Newfield Production Company, Denver
Newfield Production Company, Myton
Duchesne County
Well File

1594 West North Temple, Suite 1210, PO Box 145801, Salt Lake City, UT 84114-5801
telephone (801) 538-5340 • facsimile (801) 359-3940 • TTY (801) 538-7458 • *www.ogm.utah.gov*

UTAH DNR OIL, GAS & MINING

JON M. HUNTSMAN, JR.
Governor

GARY R. HERBERT
Lieutenant Governor

State of Utah
DEPARTMENT OF NATURAL RESOURCES

MICHAEL R. STYLER
Executive Director

Division of Oil Gas and Mining

JOHN R. BAZA
Division Director

UNDERGROUND INJECTION CONTROL PERMIT

Cause No. UIC-346

Operator: Newfield Production Company

Well: Wells Draw 8-5-9-16

Location: Section 5, Township 9 South, Range 16 East

County: Duchesne

API No.: 43-013-32132

Well Type: Enhanced Recovery (waterflood)

Stipulations of Permit Approval

1. Approval for conversion to Injection Well issued on May 6, 2008.
2. Maximum Allowable Injection Pressure: 1,917 psig
3. Maximum Allowable Injection Rate: (restricted by pressure limitation)
4. Injection Interval: Green River Formation (4,192' - 6,014')

Approved by: Gil Hunt — 3-18-09

Gil Hunt
Associate Director

Date

cc: Bruce Suchomel, Environmental Protection Agency
Bureau of Land Management, Vernal
Eric Sundberg, Newfield Production Company, Denver
Newfield Production Company, Myton
Duchesne County
Well File

1594 West North Temple, Suite 1210, PO Box 145801, Salt Lake City, UT 84114-5801
telephone (801) 538-5340 • facsimile (801) 359-3940 • TTY (801) 538-7458 • *www.ogm.utah.gov*

UTAH DNR OIL, GAS & MINING

JON M. HUNTSMAN, JR.
Governor

GARY R. HERBERT
Lieutenant Governor

State of Utah

DEPARTMENT OF NATURAL RESOURCES

MICHAEL R. STYLER
Executive Director

Division of Oil, Gas and Mining

JOHN R. BAZA
Division Director

May 6, 2008

Newfield Production Company
1401 17th Street, Suite 1000
Denver, Colorado 80202

Re: Wells Draw Unit Well: Wells Draw 8-5-9-16, Section 5, Township 9 South, Range 16 East, Duchesne County, Utah

Mr. Eric Sundberg,

Pursuant to Utah Admin. Code R649-5-3-3, the Division of Oil, Gas and Mining (the "Division") issues its administrative approval for conversion of the referenced well to a Class II injection well. Accordingly, the following stipulations shall apply for full compliance with this approval:

1. Compliance with all applicable requirements for the operation, maintenance and reporting for Underground Injection Control ("UIC") Class II injection wells pursuant to Utah Admin. Code R649-1 et seq.

2. Conformance with all conditions and requirements of the complete application submitted by Newfield Production Company.

3. A casing\tubing pressure test shall be conducted prior to commencing injection.

The Division will issue an Underground Injection Control Permit after the above stipulations have been meet. If you have any questions regarding this approval or the necessary requirements, please contact Brad Hill or Clinton Dworshak at this office.

Sincerely,

Gil Hunt
Associate Director

cc: Dan Jackson, Environmental Protection Agency
Bureau of Land Management, Vernal
Newfield Production Company, Myton
SITLA
Duchesne County
Well File

STATE OF UTAH
DEPARTMENT OF NATURAL RESOURCES
DIVISION OF OIL, GAS, AND MINING

FORM 9

SUNDRY NOTICES AND REPORTS ON WELLS

Do not use this form for proposals to drill new wells, significantly deepen existing wells below current bottom-hole depth, reenter plugged wells, or to drill horizontal laterals. Use APPLICATION FOR PERMIT TO DRILL form for such proposals.

5.LEASE DESIGNATION AND SERIAL NUMBER: UTU-30096

6. IF INDIAN, ALLOTTEE OR TRIBE NAME:

7.UNIT or CA AGREEMENT NAME: GMBU (GRRV)

1. TYPE OF WELL Water Injection Well

8. WELL NAME and NUMBER: WELLS DRAW 8-5-9-16

2. NAME OF OPERATOR: NEWFIELD PRODUCTION COMPANY

9. API NUMBER: 43013321320000

3. ADDRESS OF OPERATOR: Rt 3 Box 3630 , Myton, UT, 84052

PHONE NUMBER: 435 646-4825 Ext

9. FIELD and POOL or WILDCAT: MONUMENT BUTTE

4. LOCATION OF WELL
FOOTAGES AT SURFACE: 1809 FNL 0588 FEL
QTR/QTR, SECTION, TOWNSHIP, RANGE, MERIDIAN: Qtr/Qtr: SENE Section: 05 Township: 09.0S Range: 16.0E Meridian: S

COUNTY: DUCHESNE

STATE: UTAH

11. CHECK APPROPRIATE BOXES TO INDICATE NATURE OF NOTICE, REPORT, OR OTHER DATA

TYPE OF SUBMISSION

- ☐ NOTICE OF INTENT — Approximate date work will start:
- ✓ SUBSEQUENT REPORT — Date of Work Completion: 1/7/2014
- ☐ SPUD REPORT — Date of Spud:
- ☐ DRILLING REPORT — Report Date:

TYPE OF ACTION

☐ ACIDIZE	☐ ALTER CASING	☐ CASING REPAIR
☐ CHANGE TO PREVIOUS PLANS	☐ CHANGE TUBING	☐ CHANGE WELL NAME
☐ CHANGE WELL STATUS	☐ COMMINGLE PRODUCING FORMATIONS	☐ CONVERT WELL TYPE
☐ DEEPEN	☐ FRACTURE TREAT	☐ NEW CONSTRUCTION
☐ OPERATOR CHANGE	☐ PLUG AND ABANDON	☐ PLUG BACK
☐ PRODUCTION START OR RESUME	☐ RECLAMATION OF WELL SITE	☐ RECOMPLETE DIFFERENT FORMATION
☐ REPERFORATE CURRENT FORMATION	☐ SIDETRACK TO REPAIR WELL	☐ TEMPORARY ABANDON
☐ TUBING REPAIR	☐ VENT OR FLARE	☐ WATER DISPOSAL
☐ WATER SHUTOFF	☐ SI TA STATUS EXTENSION	☐ APD EXTENSION
☐ WILDCAT WELL DETERMINATION	✓ OTHER	OTHER: 5 YR MIT

12. DESCRIBE PROPOSED OR COMPLETED OPERATIONS. Clearly show all pertinent details including dates, depths, volumes, etc.

On 01/02/2014 Chris Jensen with the State of Utah DOGM was contacted concerning the 5 Year MIT on the above listed well. On 01/07/2014 the casing was pressured up to 1194 psig and charted for 30 minutes with no pressure loss. The well was not injecting during the test . The tubing pressure was 1612 psig during the test. There was a State representative available to witness the test - Chris Jensen.

Accepted by the Utah Division of Oil, Gas and Mining
FOR RECORD ONLY
January 09, 2014

NAME (PLEASE PRINT)	PHONE NUMBER	TITLE
Lucy Chavez-Naupoto	435 646-4874	Water Services Technician

SIGNATURE	DATE
N/A	1/9/2014

RECEIVED: Jan. 09, 2014

Mechanical Integrity Test
Casing or Annulus Pressure Test

Newfield Production Company
Rt. 3 Box 3630
Myton, UT 84052
435-646-3721

Witness: Chris Jensen **Date** 1/7/14 **Time** 10:54 am pm
Test Conducted by: Britt Jensen
Others Present: John Daniels

Well: Wells Draw 8-5-9-16 **Field:** GMBU
Well Location: SE/NE Sec. 5, T9S, R16E **API No:** 43-013-32132

5 year MIT

Time	Casing Pressure	
0 min	1194	psig
5	1194	psig
10	1194	psig
15	1194	psig
20	1194	psig
25	1194	psig
30 min	1194	psig
35		psig
40		psig
45		psig
50		psig
55		psig
60 min		psig

Tubing pressure: 1612 psig

Result: **Pass** **Fail**

Signature of Witness: Jensen
Signature of Person Conducting Test: Benjamin

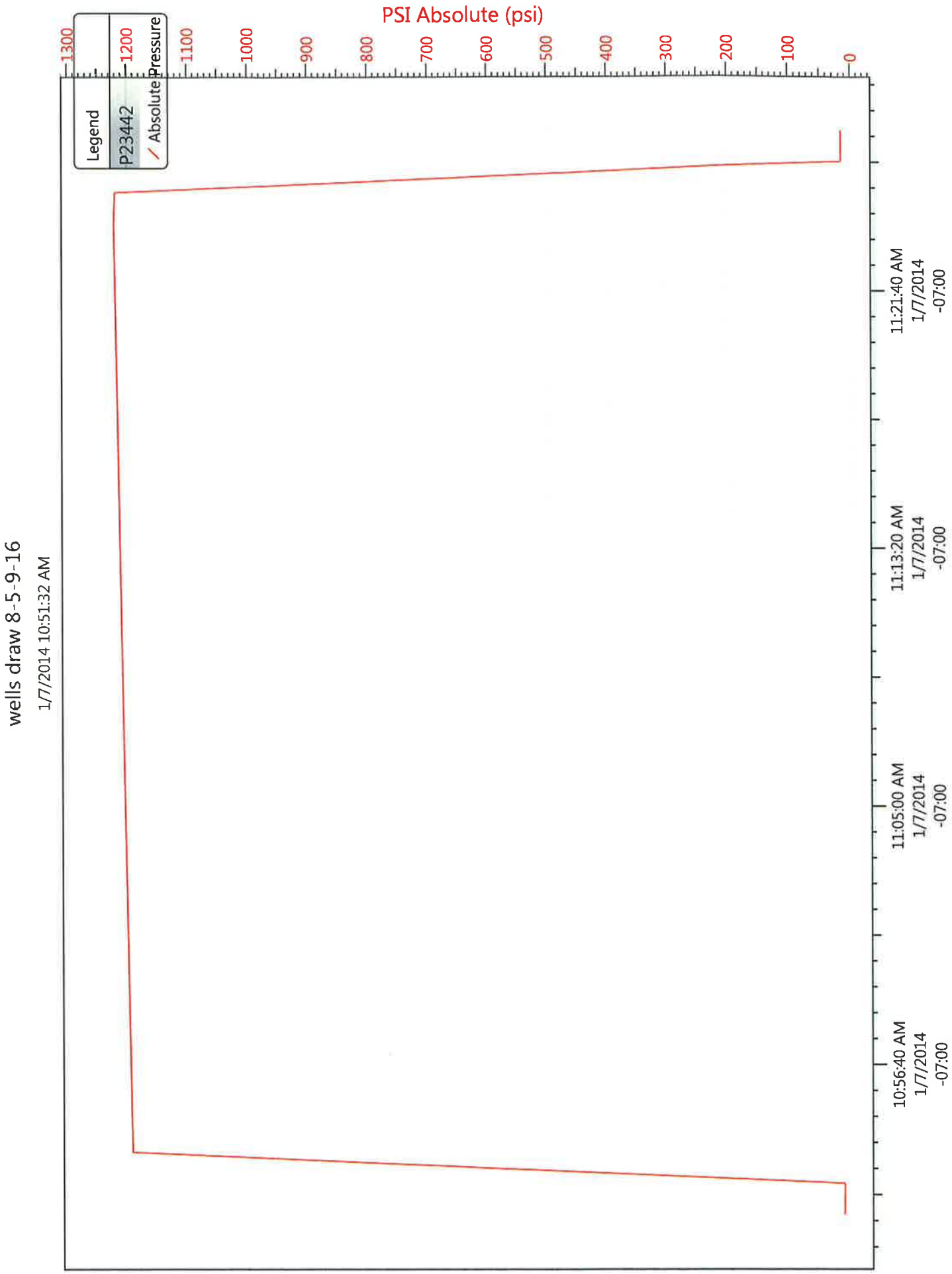
wells draw 8-5-9-16
1/7/2014 10:51:32 AM
PSI Absolute (psi)
1300
1200
1100
1000
900
800
700
600
500
400
300
200
100
0
Legend
P23442
Absolute Pressure
10:56:40 AM
1/7/2014
-07:00
11:05:00 AM
1/7/2014
-07:00
11:13:20 AM
1/7/2014
-07:00
11:21:40 AM
1/7/2014
-07:00

Wells Draw #8-5-9-16

Spud Date: 3/21/00
Put on Production: 4/21/00
Re-completed: 5/1/01
GL: 5776' KB: 5786' 10' KB

Initial Production: 80 BOPD, 96 MCFD, 15 BWPD
Re-completion: 35.4 BOPD, 35 MCFG, 35 BWPD

SURFACE CASING

CSG SIZE: 8-5/8"
GRADE: J-55
WEIGHT: 24#
LENGTH: 7 JTS (309.87')
DEPTH LANDED: 307.47' KB
HOLE SIZE: 12-1/4"
CEMENT DATA: 141 sx Class "G" cmt.

PRODUCTION CASING

CSG SIZE: 5-1/2"
GRADE: J-55
WEIGHT: 17# and 15.5#
LENGTH: 144 jts (5993.87')
HOLE SIZE: 7-7/8"
SET AT: 5991.47' KB
CEMENT DATA: 265 sx Prem Lite II, 400 sx 50/50 Pozmix
CEMENT TOP AT: Above 200' per CBL

TUBING

SIZE/GRADE/WT: 2-7/8", J-55, 6.5#
NO. OF JOINTS: 137 jts. (4297.82')
SEATING NIPPLE: 2-7/8", 1.10'
SN LANDED AT: 4307.82' KB
TOTAL STRING LENGTH: 4316.32' KB

Injection Wellbore Diagram

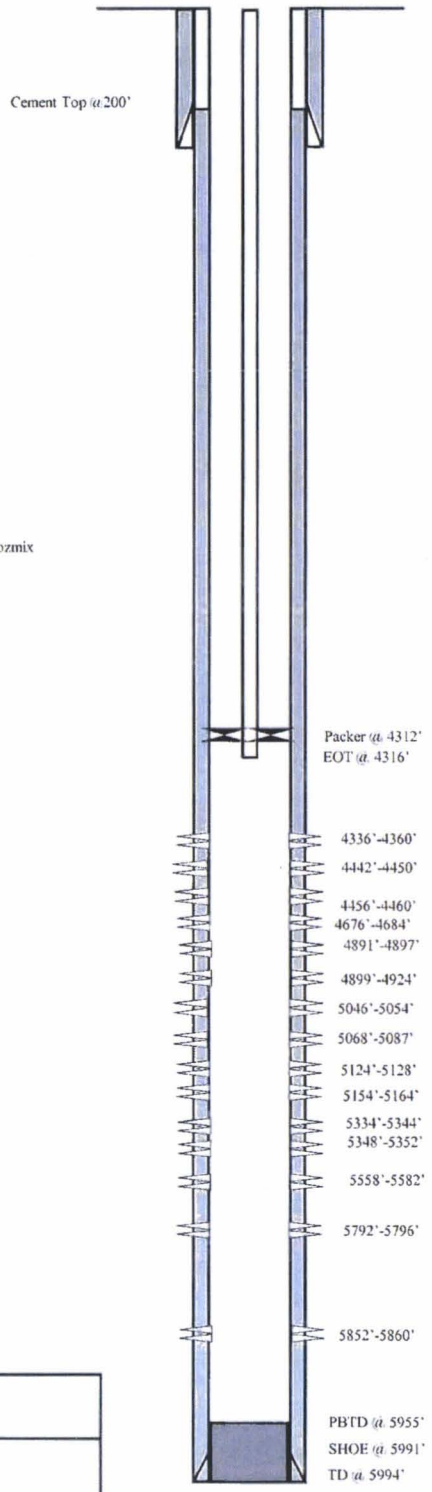

FRAC JOB

04/18/00	4891'-4924'	**Frac D sands as follows:** 84,020#'s 20/40 sand in 479 bbls Viking I-25 fluid. Treated @ avg press of 2300 psi w/ avg rate of 30 BPM. ISIP 2650 psi. Calc flush: 4889 gal. Actual flush: 4746 gal
05/03/01	5792'-5860'	**Frac CP1 and CP.5 sands as follows:** 49,221#'s 20/40 sand in 327 bbls Viking I-25 fluid. Treated @ avg press of 3450 psi with avg rate of 14 BPM. ISIP 2250 psi. Calc flush: 1526 gal. Actual flush: 1428 gal.
05/04/01	5558'-5582'	**Frac LDC sands as follows:** 118,659#'s 20/40 sand in 703 bbls Viking I-25 fluid. Treated @ avg press of 4460 psi w/avg rate of 15.2 BPM. ISIP 3030 psi. Calc flush: 1459 gal. Actual flush: 1344 gal.
05/05/01	5334'-5352'	**Frac A1 sands as follows:** 68,020#'s 20/40 sand in 425 bbls Viking I-25 fluid. Treated @ avg press of 3200 psi w/avg rate of 14.3 BPM. ISIP 2325 psi. Calc flush: 1401 gal. Actual flush: 1302 gal.
05/08/01	5046'-5164'	**Frac B1, B.5 &C sands as follows:** 176,760#'s 20/40 sand in 1037 bbls Viking I-25 fluid. Treated avg press of 4200 psi w/avg rate of 17.7 BPM. ISIP 1950 psi. Calc flush: 1338 gal. Actual flush: 1218 gal.
05/09/01	4676'-4684'	**Frac PB 11 sands as follows:** 48,200#'s 20/40 sand in 324 bbls Viking I-25 fluid. Treated avg press of 3500 psi w/avg rate of 16.2 BPM. ISIP 2230 psi. Calc flush: 1239 gal. Actual flush: 1134 gal.
05/10/01	4336'-4460'	**Frac GB6 and GB2 sands as follows:** 152,820#'s 20/40 sand in 1010 bbls Viking I-25 fluid. Treated avg press of 2000 psi w/avg rate of 30 BPM. ISIP 2230 psi. Calc flush: 4334 gal. Actual flush: 4263 gal.
10/09/01		Tubing leak. Update rod and tubing details.
07/30/02		Pump change. Update rod details.
09/11/02		Stuck plunger. Update rod details.
12/03/02		Pump change. Update rod details.
09/24/03		Parted rods. Update rod details.
03/01/04		Parted rods. Update rod details.
03/20/04		Stuck Pump. Bailed sand. Update rod and tubing details.
04/05/04		Tubing leak.
03/22/05		Parted rods. Update tubing detail.
05/17/05		Parted rods. Update rod detail.
08/14/06		Parted rods. Update rod and tubing details.
1/30/09		**Well converted to an Injection Well.**
2/9/09		**MIT completed and submitted.**

PERFORATION RECORD

4/18/00	4891'-4897'	2 JSPF	12 holes
4/18/00	4899'-4924'	2 JSPF	50 holes
5/01/01	5852'-5860'	4 JSPF	32 holes
5/01/01	5792'-5796'	4 JSPF	16 holes
5/01/01	5558'-5582'	4 JSPF	96 holes
5/01/01	5348'-5352'	4 JSPF	16 holes
5/01/01	5334'-5344'	4 JSPF	40 holes
5/01/01	5154'-5164'	4 JSPF	40 holes
5/01/01	5124'-5128'	4 JSPF	16 holes
5/01/01	5068'-5087'	4 JSPF	76 holes
5/01/01	5046'-5054'	4 JSPF	32 holes
5/01/01	4676'-4684'	4 JSPF	32 holes
5/01/01	4456'-4460'	4 JSPF	16 holes
5/01/01	4442'-4450'	4 JSPF	32 holes
5/01/01	4336'-4360'	4 JSPF	96 holes

NEWFIELD

Wells Draw #8-5-9-16

1809' FNL & 587' FEL

SE/NE Section 5-T9S-R16E

Duchesne Co, Utah

API #43-013-32132; Lease #UTU-30096

CR 2/9/09