(December 1990)

(Other instructions on reverse side)

Budget Bureau No. 1004-0136
Expires December 31, 1991

# UNITED STATES
# DEPARTMENT OF THE INTERIOR
## BUREAU OF LAND MANAGEMENT

5. LEASE DESIGNATION AND SERIAL NO.
UTU-73087

6. IF INDIAN, ALOTTEE OR TRIBE NAME

# APPLICATION FOR PERMIT TO DRILL, DEEPEN, OR PLUG BACK

1a. TYPE OF WORK DRILL [X] DEEPEN [ ]

1b. TYPE OF WELL

OIL WELL [X] GAS WELL [ ] OTHER [ ] SINGLE ZONE [ ] MULTIPLE ZONE [ ]

7. UNIT AGREEMENT NAME

8. FARM OR LEASE NAME
South Wells Draw

2. NAME OF OPERATOR
Inland Production Company

9. WELL NO.
#11-4-9-16

3. ADDRESS OF OPERATOR
P.O. Box 790233 Vernal, UT 84079 Phone: (435) 789-1866

10. FIELD AND POOL OR WILDCAT
Monument Butte

4. LOCATION OF WELL (Report location clearly and in accordance with any State requirements.*)
At Surface NE/SW
At proposed Prod. Zone 2067' FSL & 1990' FWL
630 607

11. SEC., T., R., M., OR BLK. AND SURVEY OR AREA
Sec. 4, T9S, R16E

14. DISTANCE IN MILES AND DIRECTION FROM NEAREST TOWN OR POST OFFICE*
12.3 Miles southwest of Myton, UT

12. County Duchesne

13. STATE UT

15. DISTANCE FROM PROPOSED* LOCATION TO NEAREST PROPERTY OR LEASE LINE, FT. (Also to nearest drlg. unit line, if any)
1990'

16. NO. OF ACRES IN LEASE
640.84

17. NO. OF ACRES ASSIGNED TO THIS WELL
40

18. DISTANCE FROM PROPOSED LOCATION* TO NEAREST WELL, DRILLING, COMPLETED, OR APPLIED FOR ON THIS LEASE, FT.

19. PROPOSED DEPTH
6500'

20. ROTARY OR CABLE TOOLS
Rotary

21. ELEVATIONS (Show whether DF, RT, GR, etc.)
5734.3' GR

22. APPROX. DATE WORK WILL START*
4th Quarter 1998

23. PROPOSED CASING AND CEMENTING PROGRAM

| SIZE OF HOLE | SIZE OF CASING | WEIGHT/FOOT | SETTING DEPTH | QUANTITY OF CEMENT |
|---|---|---|---|---|
| | | | | |
| Refer to Monument Butte Field SOP's Drilling Program/Casing Design | | | | |
| | | | | |

**The Conditions of Approval For Application For Permit To Drill are attached.**

RECEIVED
JUL 31 1998
DIV. OF OIL, GAS & MINING

IN ABOVE SPACE DESCRIBE PROPOSED PROGRAM : If proposal is to deepen or plug back, give data on present productive zone and proposed new productive zone.
If proposal is to drill or deepen directionally, give pertinent data on subsurface locations and measured and true vertical depths. Give blowout preventer program, if any.

24.
SIGNED Cheryl Cameron TITLE Regulatory Specialist DATE 7/24/98
Cheryl Cameron

(This space for Federal or State office use)

PERMIT NO. 43-013-32104 APPROVAL DATE

Application approval does not warrant or certify that the applicant holds legal or equitable title to those rights in the subject lease which would entitle the applicant to conduct operations thereon.

CONDITIONS OF APPROVAL, IF ANY: Federal Approval of this Action is Necessary

APPROVED BY Bradley G. Hill TITLE BRADLEY G. HILL RECLAMATION SPECIALIST III DATE 8/10/98

674561.1
4434362.2

*See Instructions On Reverse Side

Title 18 U.S.C. Section 1001, makes it a crime for any person knowingly and willfully to make to any department or agency of the United States any false, fictitious or fraudulent statements or representations as to any matter within its jurisdiction.

# T9S, R16E, S.L.B.&M.

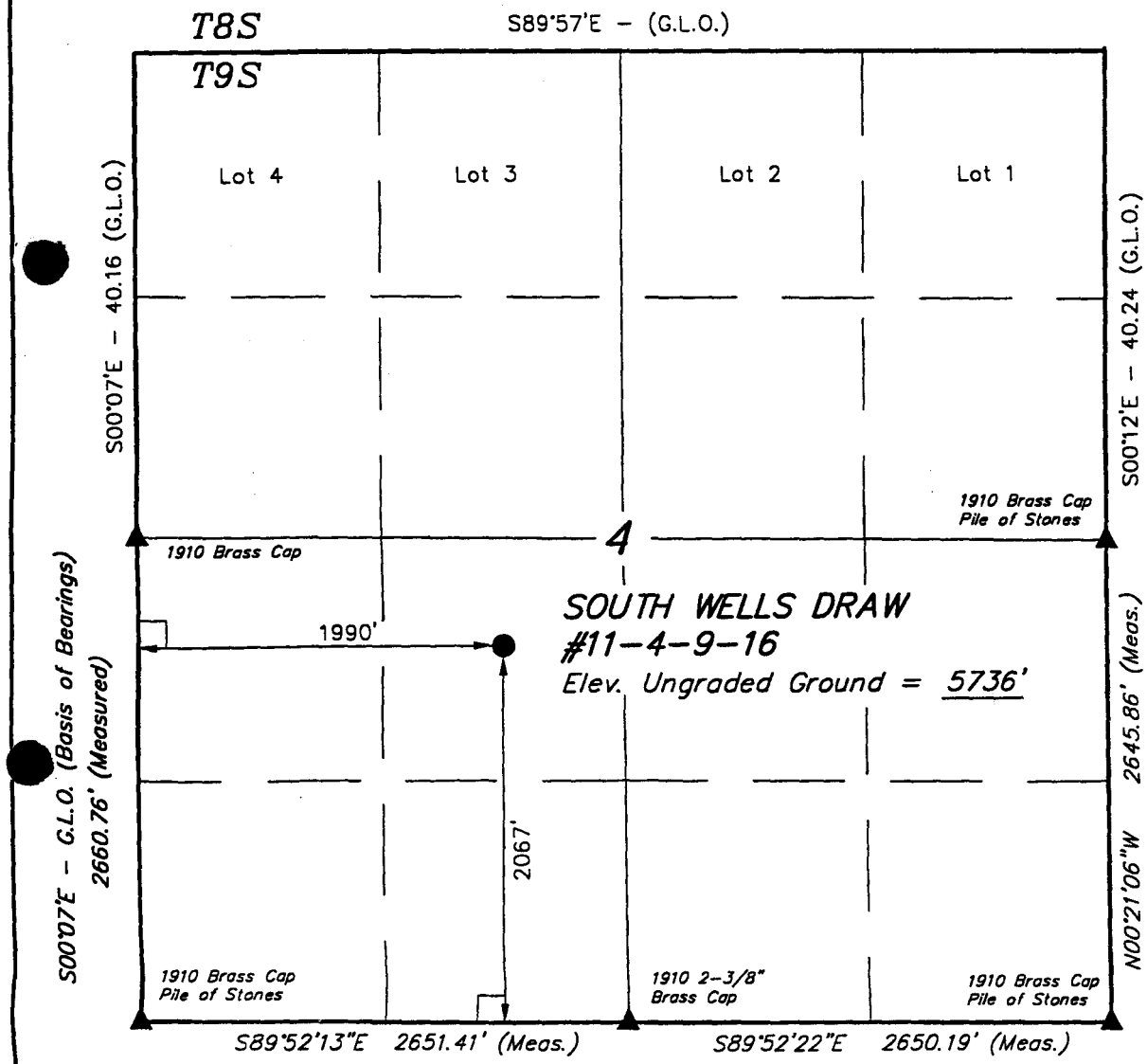


LEGEND:

└ = 90° SYMBOL

● = PROPOSED WELL HEAD.

▲ = SECTION CORNERS LOCATED.

## INLAND PRODUCTION CO.

Well location, SOUTH WELLS DRAW #11-4-9-16, located as shown in the NE 1/4 SW 1/4 of Section 4, T9S, R16E, S.L.B.&M. Duchesne County, Utah.

### BASIS OF ELEVATION

SPOT ELEVATION AT THE SOUTHWEST CORNER OF SECTION 4, T9S, R16E, S.L.B.&M. TAKEN FROM THE MYTON SW QUADRANGLE, UTAH, DUCHESNE COUNTY, 7.5 MINUTE QUAD. (TOPOGRAPHIC MAP) PUBLISHED BY THE UNITED STATES DEPARTMENT OF THE INTERIOR, GEOLOGICAL SURVEY. SAID ELEVATION IS MARKED AS BEING 5778 FEET.

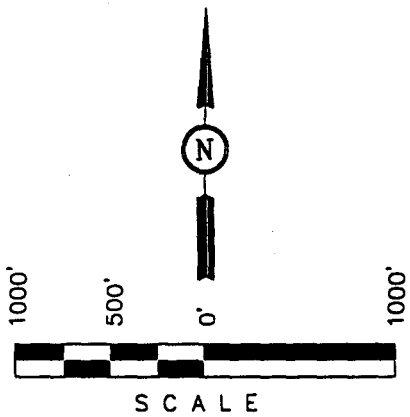


### CERTIFICATE

THIS IS TO CERTIFY THAT THE ABOVE PLAT WAS PREPARED FROM FIELD NOTES OF ACTUAL SURVEYS MADE BY ME OR UNDER MY SUPERVISION AND THAT THE SAME ARE TRUE AND CORRECT TO THE BEST OF MY KNOWLEDGE AND BELIEF.

Robert L Kay

REGISTERED LAND SURVEYOR
REGISTRATION NO. 161319
STATE OF UTAH

**UINTAH ENGINEERING & LAND SURVEYING**
*85 SOUTH 200 EAST - VERNAL, UTAH 84078*
(435) 789-1017

| | | |
|---|---|---|
| SCALE 1" = 1000' | DATE SURVEYED: 07-20-98 | DATE DRAWN: 07-22-98 |
| PARTY J.F B.B. D.R.B. | REFERENCES G.L.O. PLAT | |
| WEATHER WARM | FILE INLAND PRODUCTION CO. | |

**INLAND PRODUCTION COMPANY**
**S. WELLS DRAW #11-4-9-16**
**NE/SW SECTION 4, T9S, R16E**
**DUCHESNE COUNTY, UTAH**

# ONSHORE ORDER NO. 1

## *DRILLING PROGRAM*

1. ***GEOLOGIC SURFACE FORMATION:***

Uinta formation of Upper Eocene Age

2. ***ESTIMATED TOPS OF IMPORTANT GEOLOGIC MARKERS:***

| | |
|---|---|
| Uinta | 0' – 1600' |
| Green River | 1600 ' |
| Wasatch | 6500' |

3. ***ESTIMATED DEPTHS OF ANTICIPATED WATER, OIL, GAS OR MINERALS:***

Green River Formation 1600' – 6500' - Oil

4. ***PROPOSED CASING PROGRAM***

Please refer to the Monument Butte Field Standard Operation Procedure (SOP).

5. ***MINIMUM SPECIFICATIONS FOR PRESSURE CONTROL:***

Please refer to the Monument Butte Field SOP. See Exhibit "F".

6. ***TYPE AND CHARACTERISTICS OF THE PROPOSED CIRCULATION MUDS:***

Please refer to the Monument Butte Field SOP.

7. ***AUXILIARY SAFETY EQUIPMENT TO BE USED:***

Please refer to the Monument Butte Field SOP.

8. ***TESTING, LOGGING AND CORING PROGRAMS:***

Please refer to the Monument Butte Field SOP.

9. ***ANTICIPATED ABNORMAL PRESSURE OR TEMPERATURE:***

The anticipated maximum bottom hole pressure is 1800 psi. It is not anticipated that abnormal temperatures will be encountered; nor that any other abnormal hazards such as H2S will be encountered in this area.

10. ***ANTICIPATED STARTING DATE AND DURATION OF THE OPERATIONS:***

Please refer to the Monument Butte Field SOP.

# INLAND PRODUCTION COMPANY
# S. WELLS DRAW #11-4-9-16
# NE/SW SECTION 4, T9S, R16E
# DUCHESNE COUNTY, UTAH

## ONSHORE ORDER NO. 1

### *MULTI-POINT SURFACE USE & OPERATIONS PLAN*

*1.* ***EXISTING ROADS***

See attached Topographic Map "A"

To reach Inland Production Company well location site S. Wells Draw # 11-4-9-16 located in the NE 1/4 SW 1/4 Section 4, T9S, R16E, S.L.B. 7 M. Duchesne County, Utah:

Proceed westerly out of Myton, Utah along Highway 40 - 1.5 miles ± to the junction of this highway and UT State Hwy 53; proceed southerly along this road 6.3 miles ± to its junction with a dirt road to the southwest; proceed southwesterly 4.5 miles to its junction with a dirt road to the west; proceed westerly 0.5 miles to its junction with a dirt road to the southeast; proceed southeasterly 0.2 miles to its junction with a dirt road to the east; proceed easterly 0.2 miles to the beginning of the proposed access road.

*2.* ***PLANNED ACCESS ROAD***

See Topographic Map "B" for the location of the proposed access road.

*3.* ***LOCATION OF EXISTING WELLS***

Refer to Exhibit "D".

*4.* ***LOCATION OF EXISTING AND/OR PROPOSED FACILITIES***

Please refer to the Monument Butte Field Standard Operating Procedure (SOP).

*5.* ***LOCATION AND TYPE OF WATER SUPPLY***

Please refer to the Monument Butte Field SOP. See Exhibit "C".

*6.* ***SOURCE OF CONSTRUCTION MATERIALS***

Please refer to the Monument Butte Field SOP.

*7.* ***METHODS FOR HANDLING WASTE DISPOSAL***

Please refer to the Monument Butte Field SOP. See Exhibit "E".

*8.* ***ANCILLARY FACILITIES***

Please refer to the Monument Butte Field SOP.

## 9. *WELL SITE LAYOUT*

The attached Location Layout Diagram describes drill pad cross-sections, cuts and fills, and locations of the mud tanks, reserve pit, pipe racks, trailer parking, spoil dirt stockpile(s), and surface material stockpile(s). Refer to Exhibit "E".

## 10. *PLANS FOR RESTORATION OF SURFACE*

Please refer to the Monument Butte Field SOP.

## 11. *SURFACE OWNERSHIP* - Bureau Of Land Management

## 12. *OTHER ADDITIONAL INFORMATION* *Archaeological Survey & Pipeline ROW*

The Archaeological Cultural Resource Survey Report is attached.

The pipeline ROW has been granted to the S. Wells Draw #11-4-9-16 for a 3"- 4" poly fuel gas line, and a 4"-6" poly gas gatherline line. Inland requests that a 30' width for the ROW and an additional 30' width for working surface as necessary. Refer to the Proposed Road & Pipeline System, Topographic Map "1".

## 13. *LESSEE'S OR OPERATORS REPRESENTATIVE AND CERTIFICATION*

*Representative*

Name: Cheryl Cameron

Address: P.O. Box 790233 Vernal, Utah 84079

Telephone: (435) 789-1866

*Certification*

Please be advised that INLAND PRODUCTION COMPANY is considered to be the operator of well #11-4-9-16 NE/SW Section 4, Township 9S, Range 16E: Lease UTU-73087 Duchesne County, Utah: and is responsible under the terms and conditions of the lease for the operations conducted upon the leased lands. Bond coverage is provided by Hartford Accident #4488944.

I hereby certify that the proposed drillsite and access route have been inspected, and I am familiar with the conditions which currently exist; that the statements made in this plan are true and correct to the best of my knowledge; and that the work associated with the operations proposed here will be performed by Inland Production Company and its contractors and subcontractors in conformity with this plan and the terms and conditions under which it is approved. This statement is subject to the provisions of 18 U.S.C. 1001 for the filing of a false statement.

7/24/98
Date

Cheryl Cameron
Regulatory Specialist

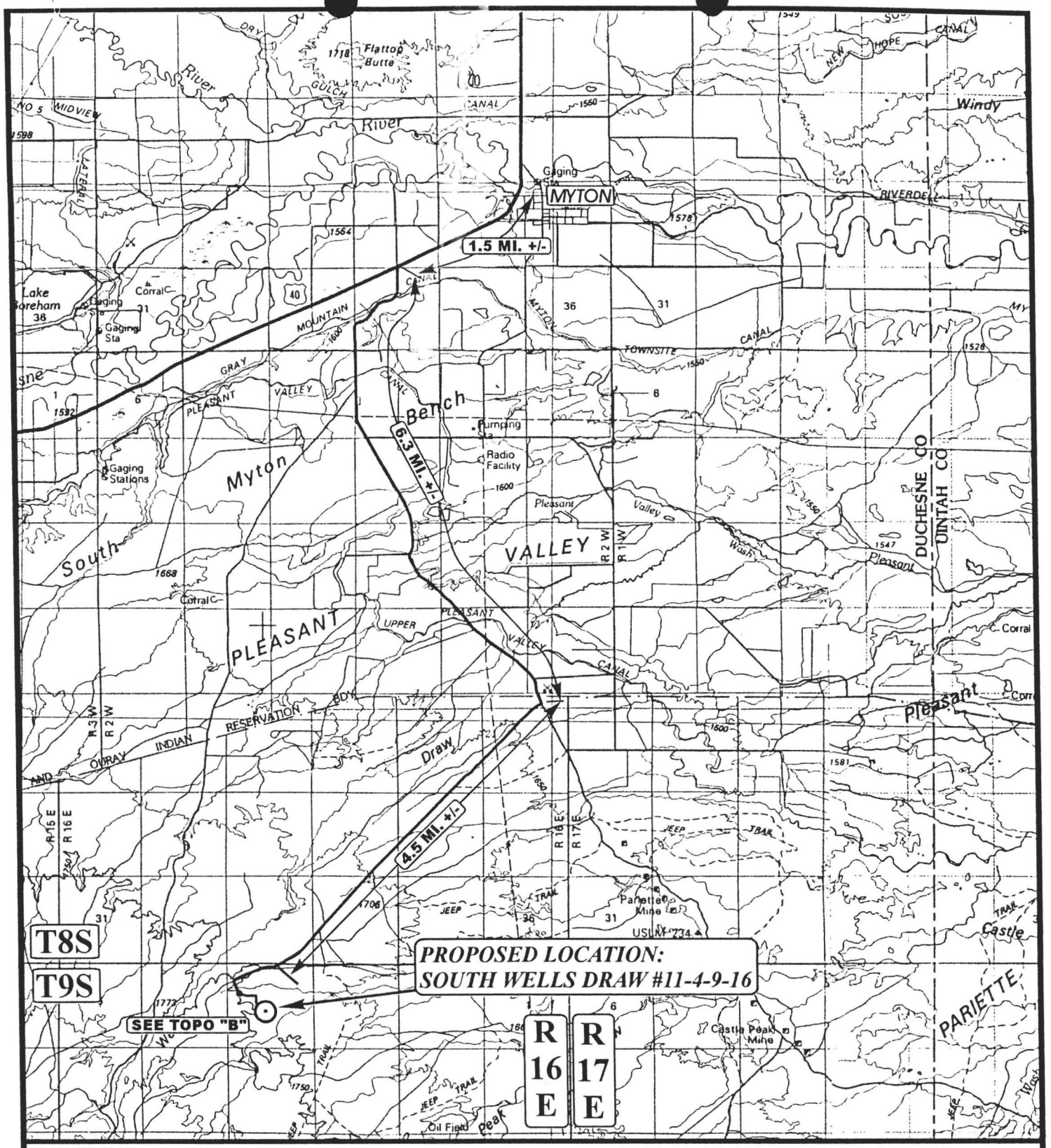


## LEGEND:

⊙ PROPOSED LOCATION

N

## INLAND PRODUCTION CO.

**SOUTH WELLS DRAW #11-4-9-16**
**SECTION 4, T9S, R16E, S.L.B.&M.**
**2067' FSL 1990' FWL**


Uintah Engineering & Land Surveying
85 South 200 East Vernal, Utah 84078
(435) 789-1017 * FAX (435) 789-1813


| TOPOGRAPHIC MAP | 7 MONTH | 21 DAY | 98 YEAR | A TOPO |
|---|---|---|---|---|
| SCALE: 1 : 100,000 | DRAWN BY: D.COX | REVISED: 00-00-00 | | |

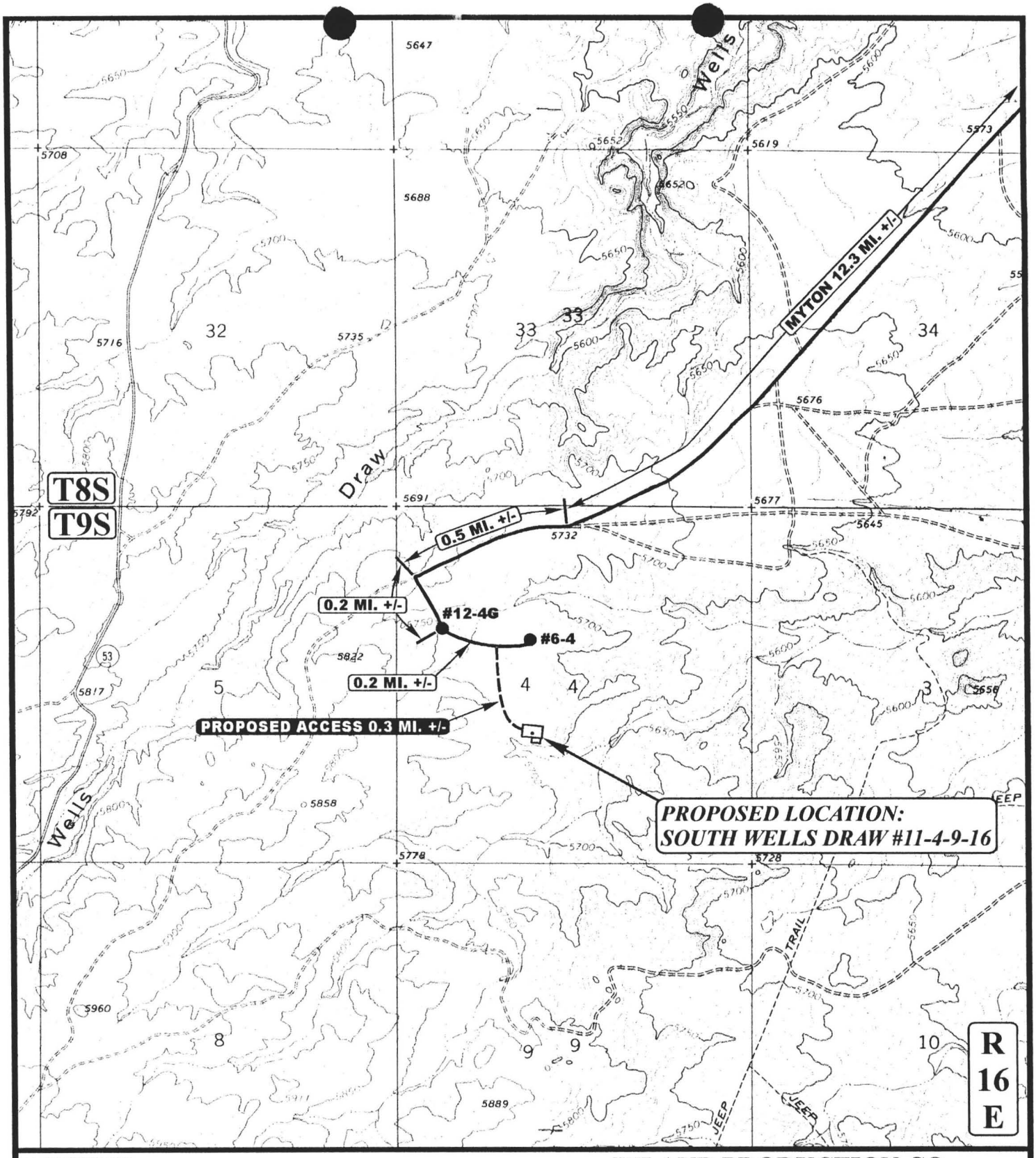


**LEGEND:**

- - - - - - - - - - PROPOSED ACCESS ROAD
——————— EXISTING ROAD

N

**INLAND PRODUCTION CO.**

**SOUTH WELLS DRAW #11-4-9-16**
**SECTION 4, T9S, R16E, S.L.B.&M.**
**2067' FSL 1990' FWL**


**Uintah Engineering & Land Surveying**
85 South 200 East Vernal, Utah 84078
(801) 789-1017 * FAX (801) 789-1813


| TOPOGRAPHIC MAP | 7 MONTH | 21 DAY | 98 YEAR | B TOPO |
|---|---|---|---|---|
| SCALE: 1" = 2000' | DRAWN BY: D.COX | REVISED: 00-00-00 | | |

EXHIBIT "C"

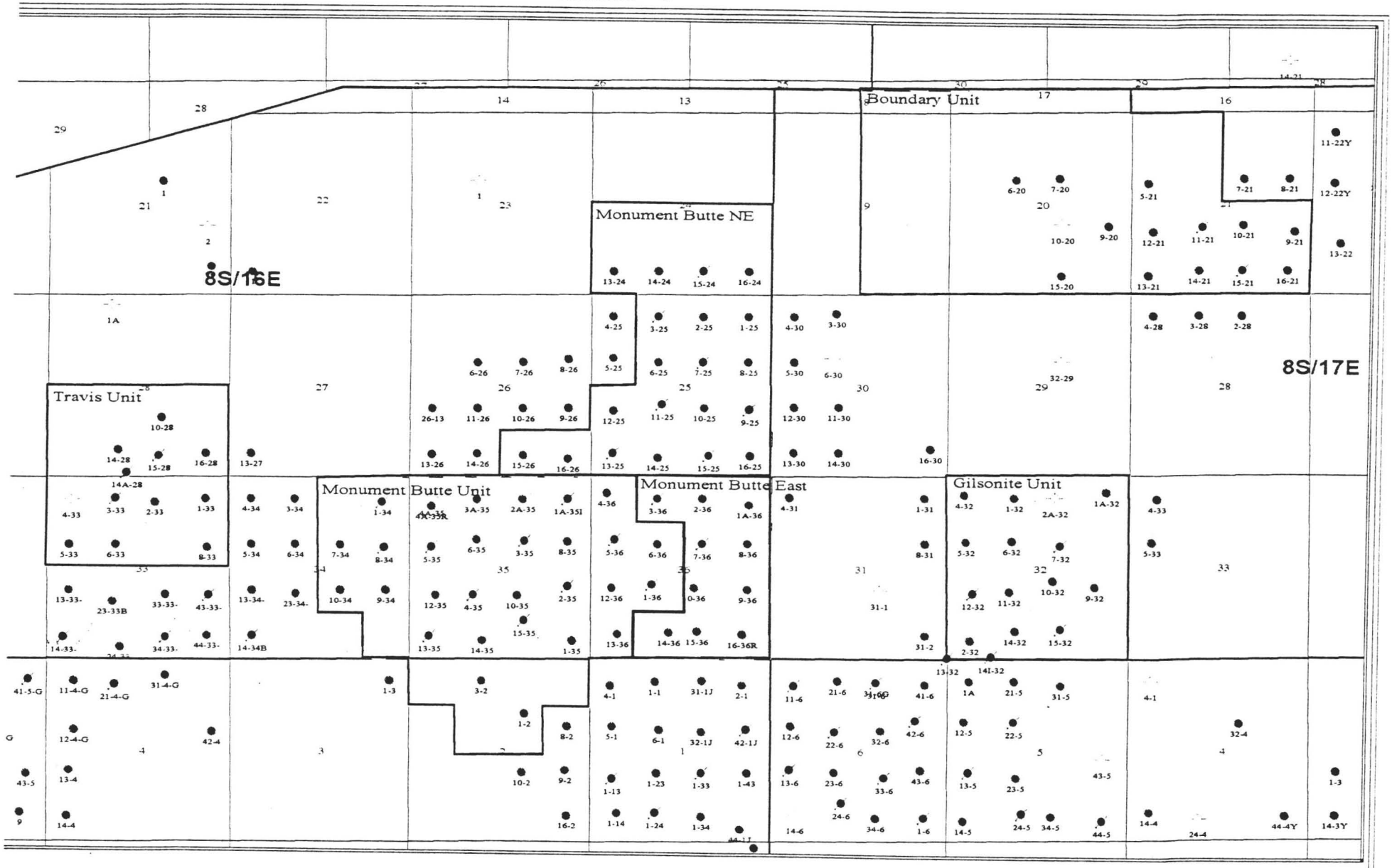


Inland Resources Inc.
475 17th Street Suite 1500
Denver, Colorado 80202
Phone: (303)-292-0900

**Regional Area**

Duchesne County, Utah

Date: 4/18/97 JA

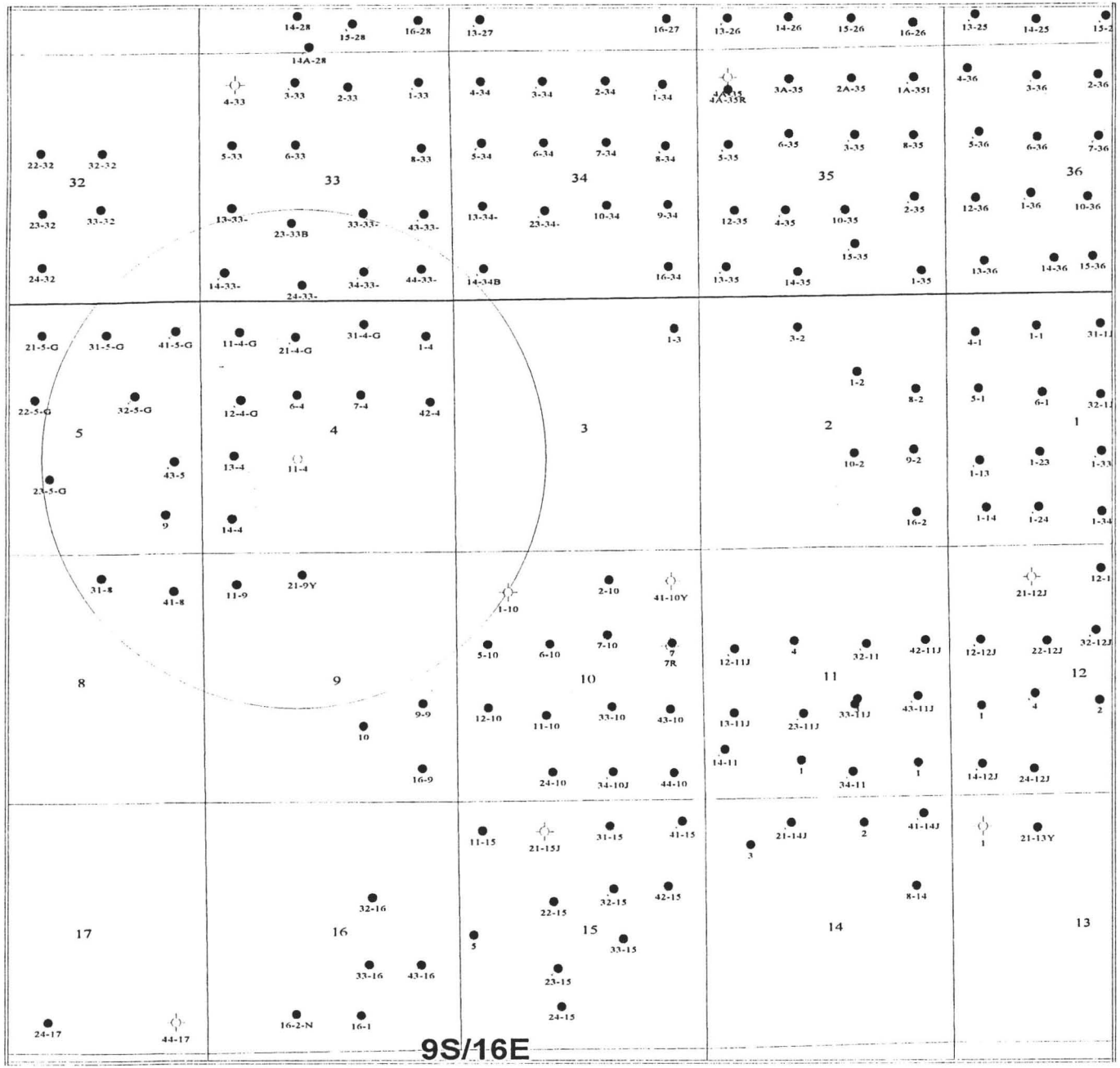

EXHIBIT "D"

INLAND PRODUCTION COMPANY

ONE MILE RADIUS
SWD #11-4

| | | |
|---|---|---|
| Josh Axelson | | 7/23/98 |
| | Scale 1:40014.37 | |

EXHIBIT "E"

# INLAND PRODUCTION CO.

## LOCATION LAYOUT FOR

SOUTH WELLS DRAW #11-4-9-16
SECTION 4, T9S, R16E, S.L.B.&M.
2067' FSL 1990' FWL

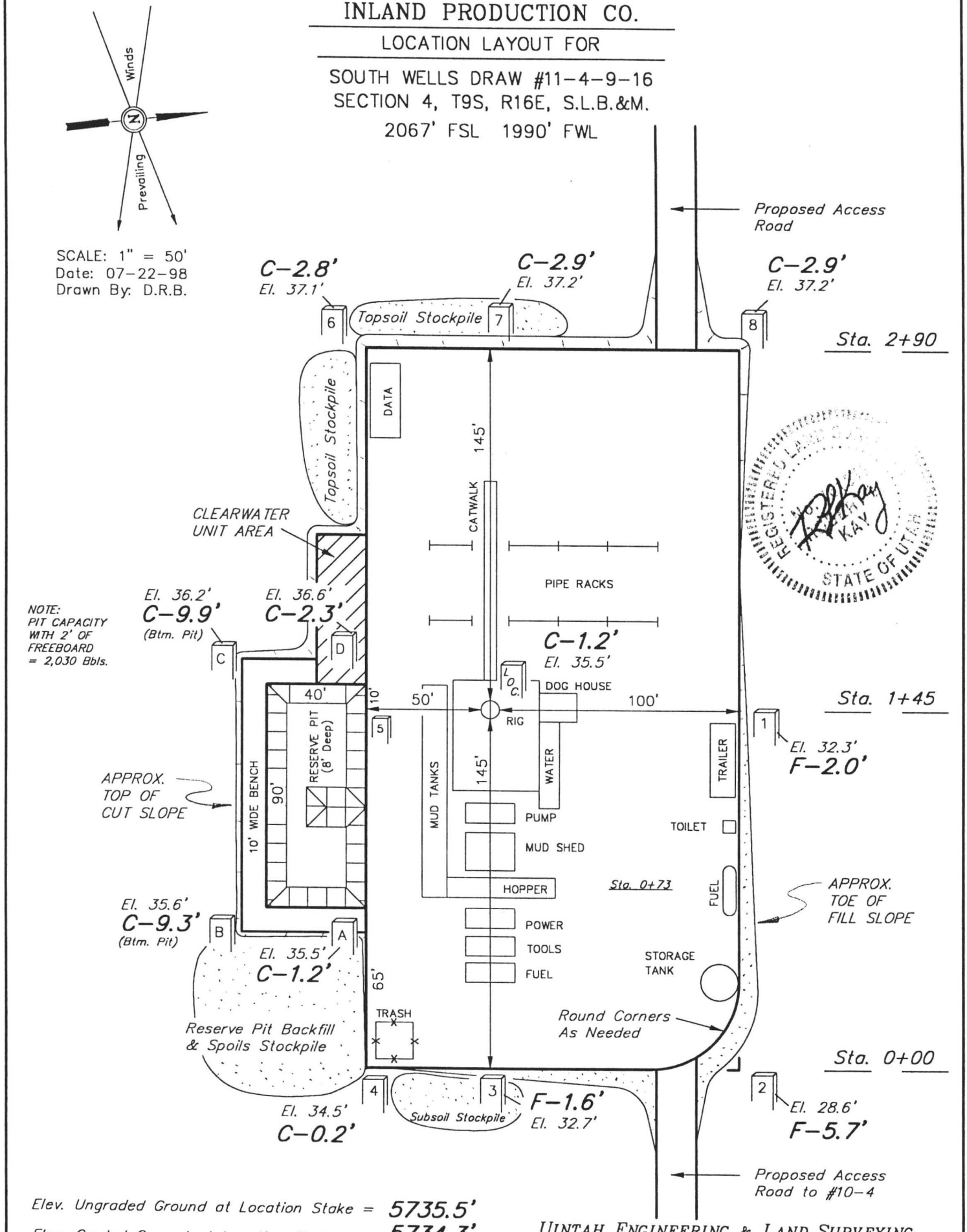


Elev. Ungraded Ground at Location Stake = 5735.5'

Elev. Graded Ground at Location Stake = 5734.3'

UINTAH ENGINEERING & LAND SURVEYING
85 So. 200 East • Vernal, Utah 84078 • (435) 789-1017

EXHIBIT "E-1"

# INLAND PRODUCTION CO.

## TYPICAL CROSS SECTIONS FOR

SOUTH WELLS DRAW #11-4-9-16
SECTION 4, T9S, R16E, S.L.B.&M.
2067' FSL 1990' FWL

1" = 20'
X-Section Scale
1" = 50'

Date: 01-15-98
Drawn By: D.R.B.

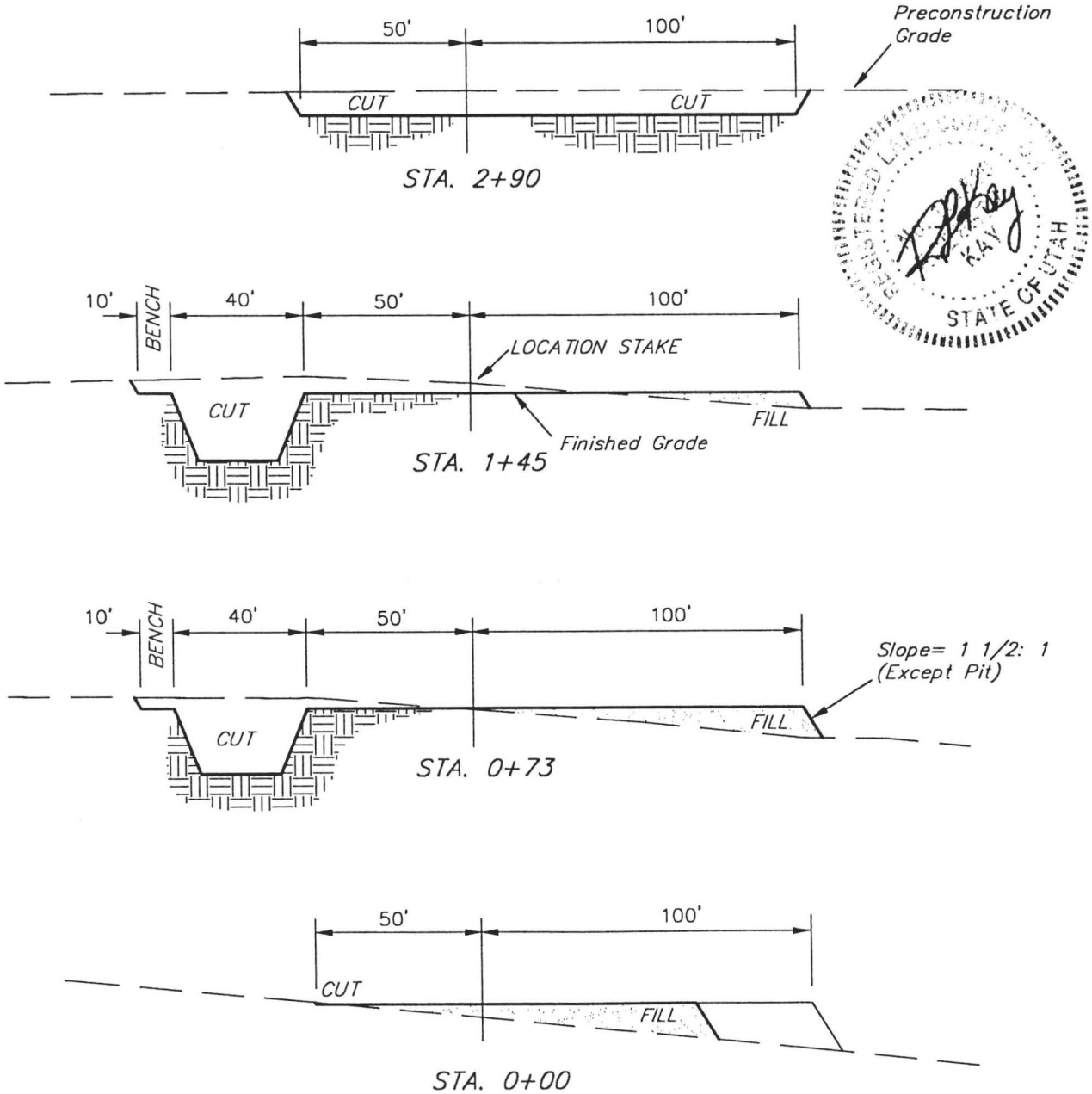


REGISTERED LAND SURVEYOR
RAY
STATE OF UTAH

## APPROXIMATE YARDAGES

CUT

| | | |
|---|---|---|
| (6") Topsoil Stripping | = 870 | Cu. Yds. |
| Remaining Location | = 2,100 | Cu. Yds. |
| TOTAL CUT | = 2,970 | CU.YDS. |
| FILL | = 1,680 | CU.YDS. |

| | | |
|---|---|---|
| EXCESS MATERIAL AFTER 5% COMPACTION | = 1,200 | Cu. Yds. |
| Topsoil & Pit Backfill (1/2 Pit Vol.) | = 1,200 | Cu. Yds. |
| EXCESS MATERIAL After Reserve Pit is Backfilled & Topsoil is Re-distributed | = 0 | Cu. Yds. |


UINTAH ENGINEERING & LAND SURVEYING
85 So. 200 East • Vernal, Utah 84078 • (435) 789-1017

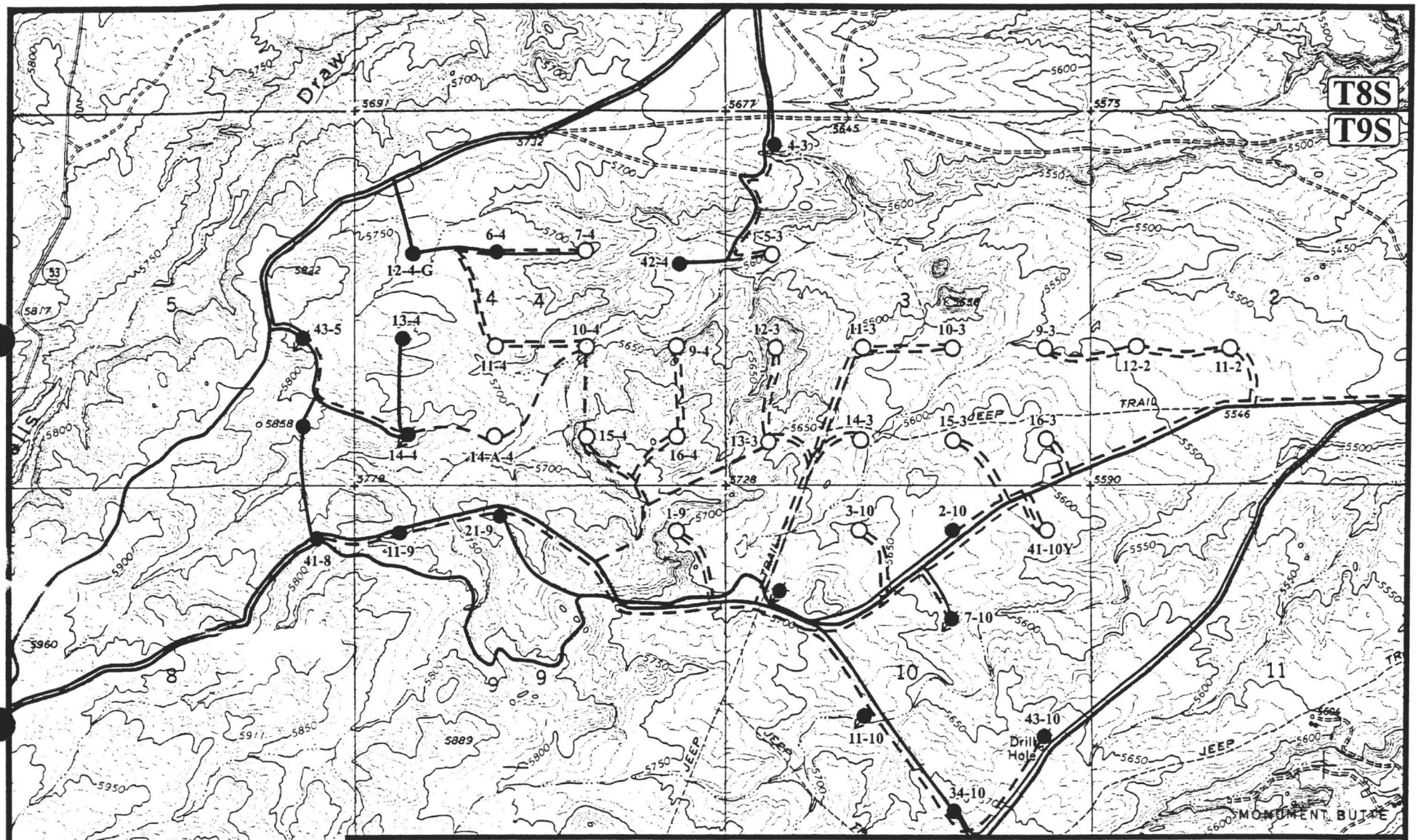


LEGEND:

- EXISTING PIPELINE
- PROPOSED PIPELINE
- PROPOSED ACCESS
- PROPOSED WATER LINE
- EXISTING WELL
- PROPOSED WELL
- EXISTING ROAD
- EXISTING WATER LINE

N

# INLAND PRODUCTION CO.

## PROPOSED ROAD & PIPELINE SYSTEM
## T9S, R16E, S.L.B.&M.


UELS
Uintah Engineering & Land Surveying
85 South 200 East Vernal, Utah 84078
(435) 789-1017 * FAX (435) 789-1813


| TOPOGRAPHIC MAP | 5 MONTH | 22 DAY | 98 YEAR | 1 TOPO |
|---|---|---|---|---|
| SCALE: 1" = 2000' | DRAWN BY: J.L.G. | REVISED: 7-7-98 | | |

Well No.: South Wells Draw 11-4-9-16

CONDITIONS OF APPROVAL
APPLICATION FOR PERMIT TO DRILL

Company/Operator: Inland Production Company

Well Name & Number: South Wells Draw 11-4-9-16

API Number:

Lease Number: UTU-73087

Location: NESW Sec. 4, T9S, R16E

## GENERAL

Access pad from NW, off of existing access road for 6-4-9-16 location.

## CULTURAL RESOURCES

See *CONDITIONS OF APPROVAL FOR INLAND RESOURCES MONUMENT BUTTE-MYTON BENCH WATERFLOOD ENVIRONMENTAL ASSESSMENT DUCHESNE AND UINTAH COUNTIES, UTAH EA NUMBER 1996-61.*

## PALEONTOLOGICAL RESOURCES

See *CONDITIONS OF APPROVAL FOR INLAND RESOURCES MONUMENT BUTTE-MYTON BENCH WATERFLOOD ENVIRONMENTAL ASSESSMENT DUCHESNE AND UINTAH COUNTIES, UTAH EA NUMBER 1996-61.*

## SOILS, WATERSHEDS, AND FLOODPLAINS

See *CONDITIONS OF APPROVAL FOR INLAND RESOURCES MONUMENT BUTTE-MYTON BENCH WATERFLOOD ENVIRONMENTAL ASSESSMENT DUCHESNE AND UINTAH COUNTIES, UTAH EA NUMBER 1996-61.*

## WILDLIFE AND FISHERIES

See *CONDITIONS OF APPROVAL FOR INLAND RESOURCES MONUMENT BUTTE-MYTON BENCH WATERFLOOD ENVIRONMENTAL ASSESSMENT DUCHESNE AND UINTAH COUNTIES, UTAH EA NUMBER 1996-61.*

**BURROWING OWL: Due to the proximity of the location to active prairie dog towns, there is the potential to encounter nesting burrowing owls between April 1 and July 15. No new construction or surface disturbing activities will be allowed between April 1 and July 15 within a 0.5 mile radius of any active burrowing owl nest.**

## THREATENED, ENDANGERED, AND OTHER SENSITIVE SPECIES

See *CONDITIONS OF APPROVAL FOR INLAND RESOURCES MONUMENT BUTTE-MYTON BENCH WATERFLOOD ENVIRONMENTAL ASSESSMENT DUCHESNE AND UINTAH COUNTIES, UTAH EA NUMBER 1996-61.*

**FERRUGINOUS HAWK: In the event that this well becomes a producing well, it must be equipped with a multi-cylinder engine or hospital muffler to reduce noise levels.**

**MOUNTAIN PLOVER: If new construction or surface disturbing activities are scheduled to occur between March 15 and August 15, detailed surveys of the area within 0.5 mile of the proposed location and within 300 feet of proposed access routes must be conducted to detect the presence of mountain plovers. All surveys must be completed prior to initiating new construction or surface disturbing activities (see Survey Protocol COAs EA Number 1996-61).**

## OTHER

Inland
RESOURCES INC.

July 29, 1998

RECEIVED
JUL 31 1998
DIV. OF OIL, GAS & MINING

Bureau of Land Management
Vernal District Office
170 South 500 East
Vernal, Utah 84078

**ATTENTION: Ed Forsman/Wayne Bankert**

**RE:** **Tar Sands Federal #15-28-8-17**
**Monument Butte Federal #4-24-8-16**
**Monument Butte Federal #1-23-8-16**
**Monument Butte Federal #3-23-8-16**
**Monument Butte Federal #8-23-8-16**
**S. Wells Draw #10-4-9-16**
**S. Wells Draw #14A-4-9-16**
**S. Wells Draw #16-4-9-16**
**S. Wells Draw #5-3-9-16**
**S. Wells Draw #12-3-9-16**
**Tar Sands Federal #16-28-8-17**
**Monument Butte Federal #5-24-8-16**
**Monument Butte Federal #2-23-8-16**
**Monument Butte Federal #7-23-8-16**
**S. Wells Draw #9-4-9-16**
**S. Wells Draw #11-4-9-16**
**S. Wells Draw #15-4-9-16**
**S. Wells Draw #4-3-9-16**
**S. Wells Draw #13-3-9-16**

Gentlemen:

Enclosed is the original and two copies (each) of Application For Permit To Drill, for the above referenced locations.

Please do not hesitate to contact me in the Vernal Branch Office, if you need additional Information, or have questions.

Sincerely,

Cheryl Cameron
Regulatory Specialist

cc: State of Utah
Division of Oil, Gas & Mining
P.O. Box 145801
1594 West North Temple, Suite 1210
Salt Lake City, Utah 84114-5801

410 Seventeenth Street, Suite 700, Denver, CO 80202 • 303-893-0102 • FAX 303-893-0103

WORKSHEET
APPLICATION FOR PERMIT TO DRILL

APD RECEIVED: 07/31/98

API NO. ASSIGNED: 43-013-32104

WELL NAME: SOUTH WELLS DRAW 11-4-9-16
OPERATOR: INLAND PRODUCTION COMPANY (N5160)
CONTACT: Cheryl Cameron (435)789-1866

PROPOSED LOCATION:
NESW 04 - T09S - R16E
SURFACE: 2067-FSL-1990-FWL
BOTTOM: 2067-FSL-1990-FWL
DUCHESNE COUNTY
MONUMENT BUTTE FIELD (105)

LEASE TYPE: FED
LEASE NUMBER: UTU-73087
SURFACE OWNER: Federal

PROPOSED FORMATION: GRRV

| INSPECT LOCATION BY: / / | | |
|---|---|---|
| TECH REVIEW | Initials | Date |
| Engineering | | |
| Geology | | |
| Surface | | |

RECEIVED AND/OR REVIEWED:

✓ Plat
✓ Bond: Federal [✓] State[] Fee[]
(No. 4488944)
N Potash (Y/N)
N Oil Shale (Y/N) *190-5(B)
✓ Water Permit
(No. Johnson Water District)
N RDCC Review (Y/N)
(Date: )

N/A St/Fee Surf Agreement (Y/N)

LOCATION AND SITING:

___ R649-2-3. Unit ___

✓ R649-3-2. General

___ R649-3-3. Exception

___ Drilling Unit
Board Cause No: ___
Date: ___

COMMENTS: * Standard Operation Procedure (SOP) separate file.

STIPULATIONS: (1) FEDERAL APPROVAL

DIVISION OF OIL, GAS & MINING

OPERATOR: INLAND PRODUCTION COMPANY (N5160)

FIELD: MONUMENT BUTTE (105)

SEC. 3 & 4, TWP 9S, RNG 16E

COUNTY: DUCHESNE UAC: R649-3-2 STATEWIDE SPACING

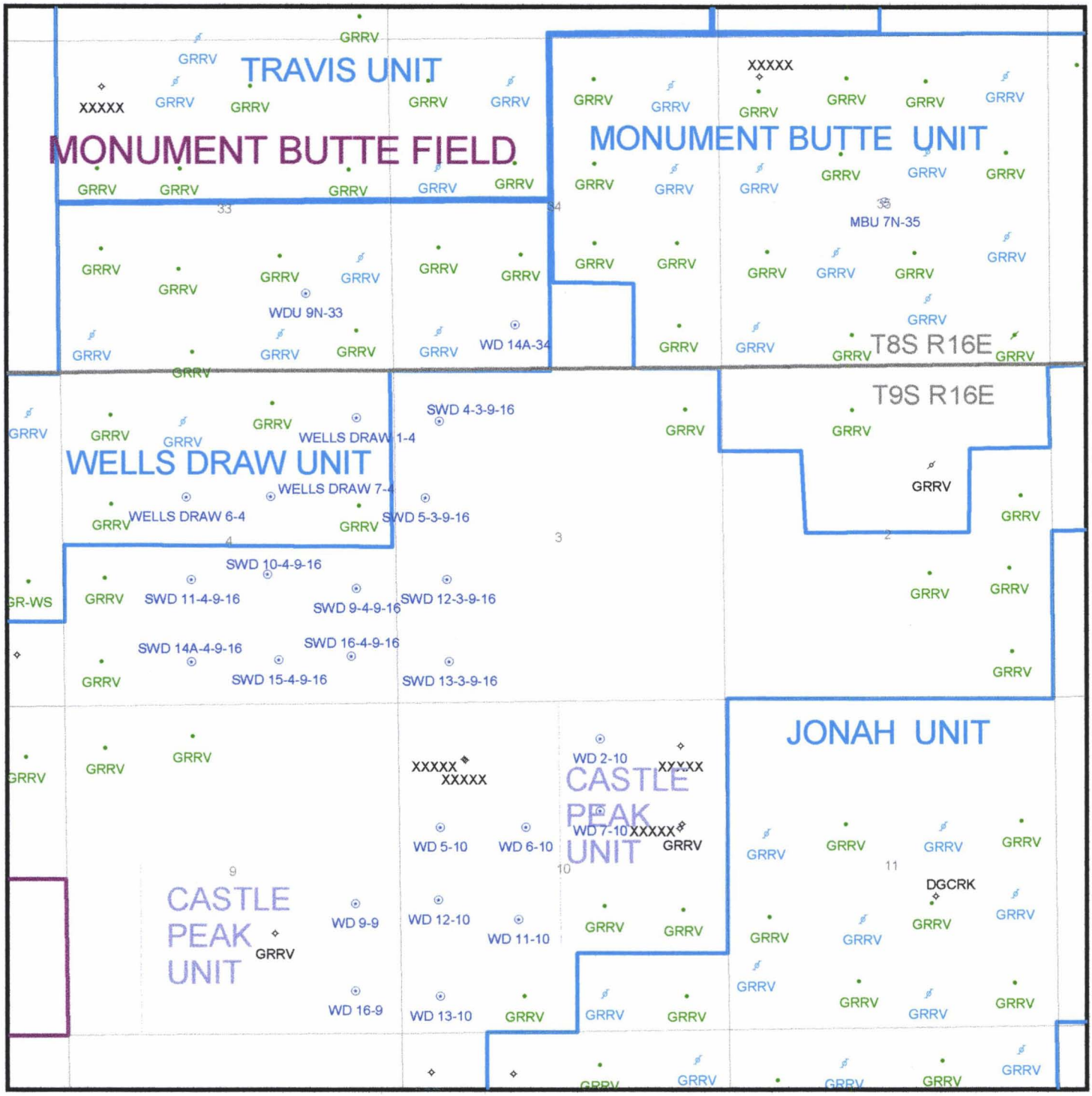


DATE PREPARED:
3-AUG-1998

State of Utah
DEPARTMENT OF NATURAL RESOURCES
DIVISION OF OIL, GAS AND MINING

1594 West North Temple, Suite 1210
PO Box 145801
Salt Lake City, Utah 84114-5801
801-538-5340
801-359-3940 (Fax)
801-538-7223 (TDD)

Michael O. Leavitt
Governor

Lowell P. Braxton
Division Director

August 10, 1998

Inland Production Company
P.O. Box 790233
Vernal, Utah 84079

Re: South Wells Draw 11-4-9-16 Well, 2067' FSL, 1990' FWL, NE SW, Sec. 4, T. 9 S., R. 16 E., Duchesne County, Utah

Gentlemen:

Pursuant to the provisions and requirements of Utah Code Ann. 40-6-1 et seq., Utah Administrative Code R649-3-1 et seq., and the attached Conditions of Approval, approval to drill the referenced well is granted.

This approval shall expire one year from the above date unless substantial and continuous operation is underway, or a request for extension is made prior to the expiration date. The API identification number assigned to this well is 43-013-32104.

Sincerely,

Gil Hunt

for John R. Baza
Associate Director

lwp
Enclosures
cc: Duchesne County Assessor
Bureau of Land Management, Vernal District Office

**Operator:** Inland Production Company

**Well Name & Number:** South Wells Draw 11-4-9-16

**API Number:** 43-013-32104

**Lease:** UTU-73087

**Location:** NE SW **Sec.** 4 **T.** 9 S. **R.** 16 E.

## Conditions of Approval

1. General
   Compliance with the requirements of Utah Admin. R. 649-1 et seq., the Oil and Gas Conservation General Rules, and the applicable terms and provisions of the approved Application for Permit to Drill.

2. Notification Requirements
   Notify the Division within 24 hours prior to spudding the well. Contact Jim Thompson at (801)538-5336.

   Notify the Division prior to commencing operations to plug and abandon the well. Contact Dan Jarvis at (801) 538-5338 or Robert Krueger at (801) 538-5274.

3. Reporting Requirements
   All required reports, forms and submittals shall be promptly filed with the Division, including but not limited to the Entity Action Form (Form 6), Report of Water Encountered During Drilling (Form 7), Weekly Progress Reports for drilling and completion operations, and Sundry Notices and Reports on Wells requesting approval of change of plans or other operational actions.

4. State approval of this well does not supersede the required federal approval which must be obtained prior to drilling.

(December 1990)

(Other instructions on reverse side)

Budget Bureau No. 1004-0136
Expires December 31, 1991

DOGMA

# UNITED STATES
# DEPARTMENT OF THE INTERIOR
## BUREAU OF LAND MANAGEMENT

5. LEASE DESIGNATION AND SERIAL NO.
~~UTU 73087~~ U-77338

6. IF INDIAN, ALOTTEE OR TRIBE NAME

# APPLICATION FOR PERMIT TO DRILL, DEEPEN, OR PLUG BACK

1a. TYPE OF WORK **DRILL** [X] **DEEPEN** [ ]

7. UNIT AGREEMENT NAME

1b. TYPE OF WELL

OIL WELL [X] GAS WELL [ ] OTHER [ ] SINGLE ZONE [ ] MULTIPLE ZONE [ ]

8. FARM OR LEASE NAME
**South Wells Draw**

2. NAME OF OPERATOR
**Inland Production Company**

9. WELL NO.
**#11-4-9-16**

3. ADDRESS OF OPERATOR
**P.O. Box 790233 Vernal, UT 84079** **Phone: (435) 789-1866**

10. FIELD AND POOL OR WILDCAT
**Monument Butte**

4. LOCATION OF WELL (Report location clearly and in accordance with any State requirements.*)
At Surface **NE/SW**
At proposed Prod. Zone **2067' FSL & 1990' FWL**

11. SEC., T., R., M., OR BLK. AND SURVEY OR AREA
**Sec. 4, T9S, R16E**

14. DISTANCE IN MILES AND DIRECTION FROM NEAREST TOWN OR POST OFFICE*
**12.3 Miles southwest of Myton, UT**

12. County **Duchesne** 13. STATE **UT**

15. DISTANCE FROM PROPOSED* LOCATION TO NEAREST PROPERTY OR LEASE LINE, FT. (Also to nearest drlg. unit line, if any)
**1990'**

16. NO. OF ACRES IN LEASE
**640.84**

17. NO. OF ACRES ASSIGNED TO THIS WELL
**40**

18. DISTANCE FROM PROPOSED LOCATION* TO NEAREST WELL, DRILLING, COMPLETED, OR APPLIED FOR ON THIS LEASE, FT.

19. PROPOSED DEPTH
**6500'**

20. ROTARY OR CABLE TOOLS
**Rotary**

21. ELEVATIONS (Show whether DF, RT, GR, etc.)
**5734.3' GR**

22. APPROX. DATE WORK WILL START*
**4th Quarter 1998**

23. **PROPOSED CASING AND CEMENTING PROGRAM**

| SIZE OF HOLE | SIZE OF CASING | WEIGHT/FOOT | SETTING DEPTH | QUANTITY OF CEMENT |
|---|---|---|---|---|
| **Refer to Monument Butte Field SOP's Drilling Program/Casing Design** | | | | |

**The Conditions of Approval For Application For Permit To Drill are attached.**

RECEIVED
JUL 30 1998

IN ABOVE SPACE DESCRIBE PROPOSED PROGRAM : If proposal is to deepen or plug back, give data on present productive zone and proposed new productive zone.
If proposal is to drill or deepen directionally, give pertinent data on subsurface locations and measured and true vertical depths. Give blowout preventer program, if any.

24.
SIGNED Cheryl Cameron TITLE **Regulatory Specialist** DATE **7/24/98**
**Cheryl Cameron**

(This space for Federal or State office use)

# NOTICE OF APPROVAL

PERMIT NO. APPROVAL DATE

TO OPERATOR'S COPY

Application approval does not warrant or certify that the applicant holds legal or equitable title to those rights in the subject lease which would entitle the applicant to conduct operations thereon.

CONDITIONS OF APPROVAL, IF ANY:

APPROVED BY TITLE Assistant Field Manager Mineral Resources DATE 9/28/98

RECEIVED
OCT 05 1998
DIV. OF OIL, GAS & MINING

***See Instructions On Reverse Side**

Title 18 U.S.C. Section 1001, makes it a crime for any person knowingly and willfully to make to any department or agency of the United States any false, fictitious or fraudulent statements or representations as to any matter within its jurisdiction.

# CONDITIONS OF APPROVAL
# APPLICATION FOR PERMIT TO DRILL

Company/Operator: Inland Production Company

Well Name & Number: S. Wells Draw 11-4-9-16

API Number: 43-013-32104

Lease Number: U -77338

Location: NESW Sec. 04 T. 9S R. 16E

RECEIVED
OCT 05 1998
DIV. OF OIL, GAS & MINING

For more specific details on notification requirements, please check the Conditions of Approval for Notice to Drill and Surface Use Program.

## CONDITIONS OF APPROVAL FOR NOTICE TO DRILL

Approval of this application does not warrant or certify that the applicant holds legal or equitable title to those rights in the subject lease which would entitle the applicant to conduct operations thereon.

Be aware fire restrictions may be in effect when location is being constructed and/or when well is being drilled. Contact the appropriate Surface Management Agency for information.

A. DRILLING PROGRAM

1. Casing Program and Auxiliary Equipment

As a minimum, the usable water resources shall be isolated and/or protected by having a cement top for the production casing at least 200 ft. above the base of the usable water zone, identified at ±1,249 ft.

**SURFACE USE PROGRAM**
Conditions of Approval (COA)

**Location Reclamation**
The following seed mixture will be used on the stock piled topsoil, reclamation of the reserve pit and for final reclamation: (All poundages are in Pure Live Seed)

| | | |
|---|---|---|
| needle and thread | Stipa comata | 2 lbs/acre |
| shadscale | Atriplex confertifolia | 3 lbs/acre |
| fourwing saltbush | Atriplex canescens | 4 lbs/acre |
| black sagebrush | Artemesia arbuscula v. nova | 3 lbs/acre |

The location topsoil pile shall be seeded immediately after site construction by broadcasting the seed, then walking the topsoil pile with the dozer to plant the seed.

The reserve pit shall have a small amount of topsoil stock piled near by, not shown on the cut sheet, to be used to spread over the reserve pit area at the time the reserve pit is reclaimed.

At the time of final abandonment the location and access will be recontoured to natural topography and topsoil spread over the area and the surface seeded immediately. If the previously reclaimed surface of the reserve pit needs additional contouring, the topsoil over the pit will be scraped off and then used as additional topsoil for final reclamation.

**Mountain Plover**
According to the timeframes listed on the following chart and prior to new construction and drilling activities, a detailed survey of the area within 0.5 mile of a proposed location and 300 feet either side of the center line of a proposed access route will be made by BLM or a qualified biologist to detect the presence of plovers. Extreme care shall be exercised to locate plovers due to their highly secretive and quiet nature. Where possible, the survey shall first be made from a stationary vehicle. All plovers located will be observed long enough to determine if a nest is present. If no visual sightings are made from the vehicle, the area will be surveyed again on foot.

| Starting Date of Construction or Drilling Activity | Number of Surveys |
|---|---|
| From March 15 through April 15 | 1 |
| From April 16 through July 15 | 2 |
| From July 16 through August 15 | 1 |

The surveys will be conducted no more than 14 days prior to the date actual construction or drilling activities begin. If two surveys are required, they will be made at least 14 days apart with the last survey no more than 14 days prior to the start-up date.

If an active nest or chicks are found in the area, the planned activity will be delayed until the chicks are out of downy plumage; the brood vacates the area of influence; or, the nest has failed.

**Raptor Habitat**

If the location is to be Constructed or drilled 2/1 to 7/15 additional surveys for raptor species will be required before development can occur.

If this is to be a producing oil well the pump unit motor will be equipped with a multicylinder engine or hospital type muffler to reduce noise.

FORM 3160-5
(June 1990)

UNITED STATES
DEPARTMENT OF THE INTERIOR
BUREAU OF LAND MANAGEMENT

FORM APPROVED
Budget Bureau No. 1004-0135
Expires: March 31, 1993

# SUNDRY NOTICES AND REPORTS ON WELLS

Do not use this form for proposals to drill or to deepen or reentry a different reservoir.
Use "APPLICATION FOR PERMIT -" for such proposals

5. Lease Designation and Serial No.
**U-77338**

6. If Indian, Allottee or Tribe Name
**NA**

7. If Unit or CA, Agreement Designation
**JONAH**

*SUBMIT IN TRIPLICATE*

1. Type of Well
[X] Oil Well [ ] Gas Well [ ] Other

8. Well Name and No.
**SOUTH WELLS DRAW 11-4-9-16**

9. API Well No.
**43-013-32104**

2. Name of Operator
**INLAND PRODUCTION COMPANY**

10. Field and Pool, or Exploratory Area
**MONUMENT BUTTE**

3. Address and Telephone No.
**410 17TH STREET, SUITE 700, DENVER, COLORADO 80202 (303) 893-0102**

11. County or Parish, State
**DUCHESNE COUNTY, UTAH**

4. Location of Well (Footage, Sec., T., R., m., or Survey Description)
**2067 FSL 1990 FWL NE/SW Section 4, T09S R16E**

12. **CHECK APPROPRIATE BOX(s) TO INDICATE NATURE OF NOTICE, REPORT, OR OTHER DATA**

| TYPE OF SUBMISSION | TYPE OF ACTION | |
|---|---|---|
| [ ] Notice of Intent | [ ] Abandonment | [ ] Change of Plans |
| [X] Subsequent Report | [ ] Recompletion | [ ] New Construction |
| [ ] Final Abandonment Notice | [ ] Plugging Back | [ ] Non-Routine Fracturing |
| | [ ] Casing Repair | [ ] Water Shut-Off |
| | [ ] Altering Casing | [ ] Conversion to Injection |
| | [X] Other **Surface Spud** | [ ] Dispose Water |
| | | (Note: Report results of multiple completion on Well Completion or Recompletion Report and Log form.) |

13. Describe Proposed or Completed Operations (Clearly state all pertinent details, and give pertinent dates, including estimated date of starting any proposed work. If well is directionally drilled, give subsurface locations and measured and true vertical depths for all markers and zones pertinent to this work.)*

MIRU (1 hr leveling location). RR (rotary table & chain. Drl & set MH & RH. Drl & set conductor. **SPUD WELL @ 7:30 PM, 10/21/98.** RR (flowline). Drl Kelly dn. NU cellar. Drl 12-1/4" hole 19' – 341'. C&C. TOH. ND cellar. Run 8-5/8" csg. RU BJ. Pmp 20 bbl dye wtr & 20 bbl gel. Cmt w/140 sx Class "G" w/2% CC & ¼#/sk Cello Flake (15.8 ppg 1.17 cf/sk yield). Est 6 bbl to sfc. Cmt fell. Pmp 6 bbl "G" cmt dn 1" sting. Est 2 bbl to sfc. RD BJ. WOC

RECEIVED
NOV 09 1998
DIV. OF OIL, GAS & MINING

14. I hereby certify that the foregoing is true and correct

Signed Shannon Smith Title Engineering Secretary Date 11/5/98

(This space for Federal or State office use)

Approved by _____ Title _____ Date _____

Conditions of approval, if any:
CC: UTAH DOGM

Title 18 U.S.C. Section 1001, makes it a crime for any person knowingly and willfully to make to any department or agency of the United States any false, fictitious or fradulent statements or representations as to any matter within its jurisdiction.

FORM 3160-5
(June 1990)

UNITED STATES
DEPARTMENT OF THE INTERIOR
BUREAU OF LAND MANAGEMENT

FORM APPROVED
Budget Bureau No. 1004-0135
Expires: March 31, 1993

# SUNDRY NOTICES AND REPORTS ON WELLS

Do not use this form for proposals to drill or to deepen or reentry a different reservoir.
Use "APPLICATION FOR PERMIT -" for such proposals

*SUBMIT IN TRIPLICATE*

5. Lease Designation and Serial No.
**U-77338**

6. If Indian, Allottee or Tribe Name
**NA**

7. If Unit or CA, Agreement Designation
**JONAH**

1. Type of Well
[X] Oil Well [ ] Gas Well [ ] Other

8. Well Name and No.
**SOUTH WELLS DRAW 11-4-9-16**

9. API Well No.
**43-013-32104**

2. Name of Operator
**INLAND PRODUCTION COMPANY**

10. Field and Pool, or Exploratory Area
**MONUMENT BUTTE**

3. Address and Telephone No.
**410 17TH STREET, SUITE 700, DENVER, COLORADO 80202 (303) 893-0102**

11. County or Parish, State
**DUCHESNE COUNTY, UTAH**

4. Location of Well (Footage, Sec., T., R., m., or Survey Description)
**2067 FSL 1990 FWL NE/SW Section 4, T09S R16E**

12. CHECK APPROPRIATE BOX(s) TO INDICATE NATURE OF NOTICE, REPORT, OR OTHER DATA

| TYPE OF SUBMISSION | TYPE OF ACTION | |
|---|---|---|
| [ ] Notice of Intent | [ ] Abandonment | [ ] Change of Plans |
| [X] Subsequent Report | [ ] Recompletion | [ ] New Construction |
| [ ] Final Abandonment Notice | [ ] Plugging Back | [ ] Non-Routine Fracturing |
| | [ ] Casing Repair | [ ] Water Shut-Off |
| | [ ] Altering Casing | [ ] Conversion to Injection |
| | [X] Other **Weekly Status** | [ ] Dispose Water |
| | | (Note: Report results of multiple completion on Well Completion or Recompletion Report and Log form.) |

13. Describe Proposed or Completed Operations (Clearly state all pertinent details, and give pertinent dates, including estimated date of starting any proposed work. If well is directionally drilled, give subsurface locations and measured and true vertical depths for all markers and zones pertinent to this work.)*

## WEEKLY STATUS REPORT FOR THE PERIOD OF 10/22/98 - 11/4/98

Drilled 7-7/8" hole w/Union, Rig #14 from 341' - 6000'.

NU BOP's. Test BOP's. Install air bowl. TIH w/7-7/8" bit. Drl plug. Drl 7-7/8" hole. Ran 5-1/2" FS, 137 jt 5-1/2", 15.5#, J-55, LT & C csg (6005'). Csg set @ 6014'. RD. RU BJ. C&C. Pmp 20 bbl dye wtr & 20 bbl gel. Cmt w/295 sx Premium Lite Modified (11.0 ppg 3.42 cf/sk yield) and 310 sx Class "G" w/10% A-10 and 10% salt (14.4 ppg 1.63 cf/sk yield). Good returns until 90 of 142 bbl displaced. Reduced rate to 3 BPM. Had partial returns until POB w/2100 psi 9:45 am, 10/29/98. Lift was 1600 psi. Est 3 bbl get returns. RD BJ. ND BOP's. Set slips w/105,000#, RD. Rig released @ 1:45 pm, 10/29/98. RDMOL.

14. I hereby certify that the foregoing is true and correct

Signed Shannon Smith Title Engineering Secretary Date 11/5/98

(This space for Federal or State office use)

Approved by _____ Title _____ Date _____

Conditions of approval, if any:
CC: UTAH DOGM

Title 18 U.S.C. Section 1001, makes it a crime for any person knowingly and willfully to make to any department or agency of the United States any false, fictitious or fradulent statements or representations as to any matter within its jurisdiction.

FORM 3160-5
(June 1990)

UNITED STATES
DEPARTMENT OF THE INTERIOR
BUREAU OF LAND MANAGEMENT

FORM APPROVED
Budget Bureau No. 1004-0135
Expires: March 31, 1993

# SUNDRY NOTICES AND REPORTS ON WELLS

Do not use this form for proposals to drill or to deepen or reentry a different reservoir.
Use "APPLICATION FOR PERMIT -" for such proposals

*SUBMIT IN TRIPLICATE*

5. Lease Designation and Serial No.
U-77338

6. If Indian, Allottee or Tribe Name
NA

7. If Unit or CA, Agreement Designation
NA

1. Type of Well
[X] Oil Well [ ] Gas Well [ ] Other

8. Well Name and No.
SOUTH WELLS DRAW 11-4-9-16

9. API Well No.
43-013-32104

2. Name of Operator
INLAND PRODUCTION COMPANY

10. Field and Pool, or Exploratory Area
MONUMENT BUTTE

3. Address and Telephone No.
475 17TH STREET, SUITE 1500, DENVER, COLORADO 80202 (303) 292-0900

11. County or Parish, State
DUCHESNE COUNTY, UTAH

4. Location of Well (Footage, Sec., T., R., m., or Survey Description)
2067 FSL 1990 FWL NE/SW Section 4, T09S R16E

12. CHECK APPROPRIATE BOX(s) TO INDICATE NATURE OF NOTICE, REPORT, OR OTHER DATA

| TYPE OF SUBMISSION | TYPE OF ACTION | |
|---|---|---|
| [ ] Notice of Intent | [ ] Abandonment | [ ] Change of Plans |
| [X] Subsequent Report | [ ] Recompletion | [ ] New Construction |
| [ ] Final Abandonment Notice | [ ] Plugging Back | [ ] Non-Routine Fracturing |
| | [ ] Casing Repair | [ ] Water Shut-Off |
| | [ ] Altering Casing | [ ] Conversion to Injection |
| | [X] Other Site Security | [ ] Dispose Water |
| | | (Note: Report results of multiple completion on Well Completion or Recompletion Report and Log form.) |

13. Describe Proposed or Completed Operations (Clearly state all pertinent details, and give pertinent dates, including estimated date of starting any proposed work. If well is directionally drilled, give subsurface locations and measured and true vertical depths for all markers and zones pertinent to this work.)*

Attached please find the site security diagram for the above referenced well.

RECEIVED
NOV 27 1998
DIV. OF OIL, GAS & MINING

14. I hereby certify that the foregoing is true and correct
Signed Debbie E. Knight Title Manager, Regulatory Compliance Date 11/24/98

(This space for Federal or State office use)
Approved by _____ Title _____ Date _____
Conditions of approval, if any:
CC: UTAH DOGM

Title 18 U.S.C. Section 1001, makes it a crime for any person knowingly and willfully to make to any department or agency of the United States any false, fictitious or fradulent statements or representations as to any matter within its jurisdiction.

# Inland Production Company
# Site Facility Diagram

**South Wells Draw 11-4**

**NE/SW Sec. 4, T9S, 16E**

**Duchesne County**

**Nov. 5, 1998**

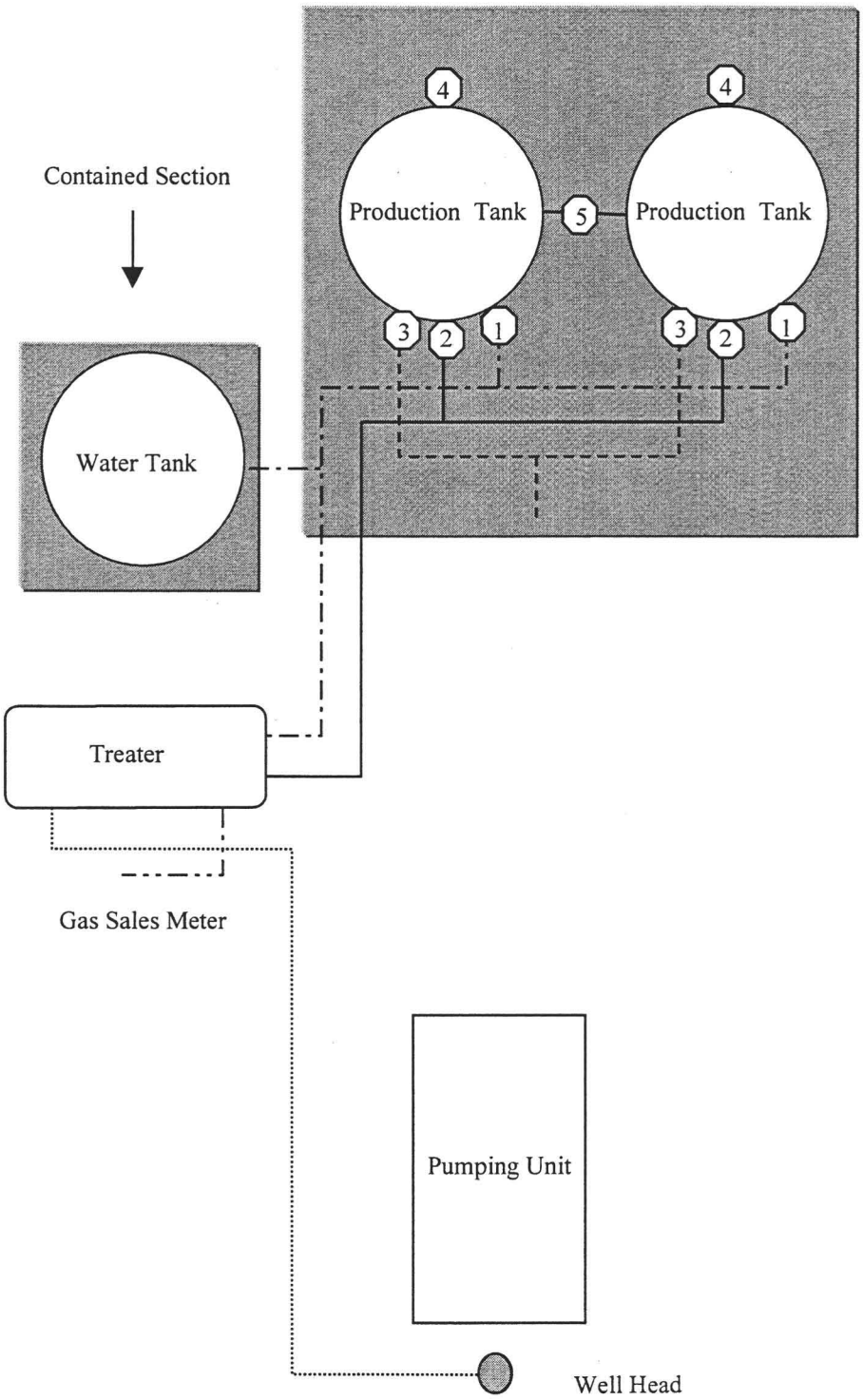


Site Security Plan is held at the Roosevelt Office, Roosevelt Utah

**Production Phase:**

**1)** Valves 1, 3, 4 sealed closed

**2)** Valves 2 and 5 sealed open

**Sales Phase:**

**1)** Valves 1, 2, 4, 5 sealed closed

**2)** Valves 3 open

**Draining Phase:**

**1)** Valve 1 open

**Legend**

| | |
|---|---|
| **Emulsion Line** | ..... |
| **Load Line** | - - - - - - - - - - |
| **Water Line** | - - - - - - - - - - - - |
| **Oil Line** | ———————— |
| **Gas Sales** | —·—·—·—·— |

FAX COVER SHEET

Inland
RESOURCES INC.
410 17th Street, Suite 700
Denver, CO 80202
Phone: 303-893-0102, Fax: 303-382-4454

DATE: 11/30/98

TO: Kristen Risbeck

COMPANY: State of Utah - DOGM

FAX NUMBER: (801) 359-3940

FROM: Shannon Smith

NUMBER OF PAGES: 3 INCLUDING COVER SHEET

Re: Entity Action Form – Form 6

If you do not receive all pages or there is a problem with this transmission, please call Shannon Smith @ (303) 382-4441.

STATE OF UTAH
DIVISION OF OIL, GAS AND MINING
ENTITY ACTION FORM - FORM 6

OPERATOR Inland Production Company
ADDRESS 410 17th St., Suite 700
Denver, Colorado 80202

OPERATOR ACCT. NO. N 5160

| ACTION CODE | CURRENT ENTITY NO. | NEW ENTITY NO. | API NUMBER | WELL NAME | WELL LOCATION QQ | SC | TP | RG | COUNTY | SPUD DATE | EFFECTIVE DATE |
|---|---|---|---|---|---|---|---|---|---|---|---|
| A | 99999 | 12507 | 43-013-31890 | TAR SANDS FED 15-33 | SW/SE | 33 | 08S | 17E | Duchesne | 10/17/98 | |

WELL 1 COMMENTS: Spud well @ 2:00 pm, 10/17/98 w/Union, Rig #7
981130 entity added. KDR

| ACTION CODE | CURRENT ENTITY NO. | NEW ENTITY NO. | API NUMBER | WELL NAME | WELL LOCATION QQ | SC | TP | RG | COUNTY | SPUD DATE | EFFECTIVE DATE |
|---|---|---|---|---|---|---|---|---|---|---|---|
| A | 99999 | 12508 | 43-013-32102 | SOUTH WELLS DRAW 9-4-9-16 | NE/SE | 4 | 09S | 16E | Duchesne | 10/13/98 | |

WELL 2 COMMENTS: Spud well w/union, Rig #14 @ 2:30 pm, 10/13/98
981130 entity added. KDR

| ACTION CODE | CURRENT ENTITY NO. | NEW ENTITY NO. | API NUMBER | WELL NAME | WELL LOCATION QQ | SC | TP | RG | COUNTY | SPUD DATE | EFFECTIVE DATE |
|---|---|---|---|---|---|---|---|---|---|---|---|
| B | 99999 | 12391 | 43-013-32061 | TAR SANDS FED 5-29-8-17 | SW/NW | 29 | 08S | 17E | Duchesne | 10/9/98 | |

WELL 3 COMMENTS: Spud well w/Union, Rig #7 @ 12:00 pm, 10/9/98.
GREATER BOUNDARY UNIT 981130 entity added (Greater Boundary (GR) unit. KDR

| ACTION CODE | CURRENT ENTITY NO. | NEW ENTITY NO. | API NUMBER | WELL NAME | WELL LOCATION QQ | SC | TP | RG | COUNTY | SPUD DATE | EFFECTIVE DATE |
|---|---|---|---|---|---|---|---|---|---|---|---|
| A | 99999 | 12509 | 43-013-32074 | CASTLE DRAW 5-4-9-17 | SW/NW | 4 | 09S | 17E | Duchesne | 11/1/98 | |

WELL 4 COMMENTS: Spud well w/Union, Rig #7 @ 1:00 pm, 11/1/98.
981130 entity added. KDR

| ACTION CODE | CURRENT ENTITY NO. | NEW ENTITY NO. | API NUMBER | WELL NAME | WELL LOCATION QQ | SC | TP | RG | COUNTY | SPUD DATE | EFFECTIVE DATE |
|---|---|---|---|---|---|---|---|---|---|---|---|
| A | 99999 | 12510 | 43-013-32105 | SOUTH WELLS DRAW 12-3-9-16 | NW/SW | 3 | 09S | 16E | Duchesne | 10/29/98 | |

WELL 5 COMMENTS: Spud well w/Union, Rig #14 @ 8:00 pm, 10/29/98
981130 entity added. KDR

ACTION CODES (See instructions on back of form)
- A - Establish new entity for new well (single well only)
- B - Add new well to existing entity (group or unit well)
- C - Re-assign well from one existing entity to another existing entity
- D - Re-assign well from one existing entity to a new entity
- E - Other (explain in comments section)

NOTE: Use COMMENT section to explain why each Action Code was selected.

(3/89)

RECEIVED
NOV 30 1998
DIV. OF OIL, GAS & MINING

Shannon Smith
Signature

Engineering Secretary 04/02/98
Title Date

Phone No. (303) 382-4441

STATE OF UTAH
DIVISION OF OIL, GAS AND MINING
ENTITY ACTION FORM - FORM 6

OPERATOR: Inland Production Company
ADDRESS: 410 17th St., Suite 700
Denver, Colorado 80202

OPERATOR ACCT. NO. N 5160

| ACTION CODE | CURRENT ENTITY NO. | NEW ENTITY NO. | API NUMBER | WELL NAME | WELL LOCATION QQ | SC | TP | RG | COUNTY | SPUD DATE | EFFECTIVE DATE |
|---|---|---|---|---|---|---|---|---|---|---|---|
| A | 99999 | 12511 | 43-013-32072 | CASTLE DRAW 2-4-9-17 | NW/NE | 4 | 09S | 17E | Duchesne | 10/24/98 | |

WELL 1 COMMENTS: Spud well w/ Union, Rig #7 @ 6:00 pm, 10/24/98.
981130 entity added. KDR

| ACTION CODE | CURRENT ENTITY NO. | NEW ENTITY NO. | API NUMBER | WELL NAME | WELL LOCATION QQ | SC | TP | RG | COUNTY | SPUD DATE | EFFECTIVE DATE |
|---|---|---|---|---|---|---|---|---|---|---|---|
| A | 99999 | 12512 | 43-013-32104 | SOUTH WELLS DRAW 11-4-9-16 | NE/SW | 4 | 09S | 16E | Duchesne | 10/21/98 | |

WELL 2 COMMENTS: Spud well w/ Union, Rig #14 @ 7:30 pm, 10/21/98.
981130 entity added. KDR

| ACTION CODE | CURRENT ENTITY NO. | NEW ENTITY NO. | API NUMBER | WELL NAME | WELL LOCATION QQ | SC | TP | RG | COUNTY | SPUD DATE | EFFECTIVE DATE |
|---|---|---|---|---|---|---|---|---|---|---|---|
| | | | | | | | | | | | |

WELL 3 COMMENTS:

| ACTION CODE | CURRENT ENTITY NO. | NEW ENTITY NO. | API NUMBER | WELL NAME | WELL LOCATION QQ | SC | TP | RG | COUNTY | SPUD DATE | EFFECTIVE DATE |
|---|---|---|---|---|---|---|---|---|---|---|---|
| | | | | | | | | | | | |

WELL 4 COMMENTS:

| ACTION CODE | CURRENT ENTITY NO. | NEW ENTITY NO. | API NUMBER | WELL NAME | WELL LOCATION QQ | SC | TP | RG | COUNTY | SPUD DATE | EFFECTIVE DATE |
|---|---|---|---|---|---|---|---|---|---|---|---|
| | | | | | | | | | | | |

WELL 5 COMMENTS:

ACTION CODES (See instructions on back of form)

A - Establish new entity for new well (single well only)
B - Add new well to existing entity (group or unit well)
C - Re-assign well from one existing entity to another existing entity
D - Re-assign well from one existing entity to a new entity
E - Other (explain in comments section)

NOTE: Use COMMENT section to explain why each Action Code was selected.

(3/89)

Shannon Smith
Signature

Engineering Secretary
Title

04/02/98
Date

Phone No. (303) 382-4441

FORM 3160-5
(June 1990)

UNITED STATES
DEPARTMENT OF THE INTERIOR
BUREAU OF LAND MANAGEMENT

FORM APPROVED
Budget Bureau No. 1004-0135
Expires: March 31, 1993

# SUNDRY NOTICES AND REPORTS ON WELLS

Do not use this form for proposals to drill or to deepen or reentry a different reservoir.
Use "APPLICATION FOR PERMIT -" for such proposals

*SUBMIT IN TRIPLICATE*

5. Lease Designation and Serial No.
U-77338

6. If Indian, Allottee or Tribe Name
NA

7. If Unit or CA, Agreement Designation
NA

1. Type of Well
[X] Oil Well [ ] Gas Well [ ] Other

8. Well Name and No.
SOUTH WELLS DRAW 11-4-9-16

9. API Well No.
43-013-32104

2. Name of Operator
INLAND PRODUCTION COMPANY

10. Field and Pool, or Exploratory Area
MONUMENT BUTTE

3. Address and Telephone No.
410 17TH STREET, SUITE 700, DENVER, COLORADO 80202 (303) 893-0102

11. County or Parish, State
DUCHESNE COUNTY, UTAH

4. Location of Well (Footage, Sec., T., R., m., or Survey Description)
2067 FSL 1990 FWL NE/SW Section 4, T09S R16E

12. CHECK APPROPRIATE BOX(s) TO INDICATE NATURE OF NOTICE, REPORT, OR OTHER DATA

| TYPE OF SUBMISSION | TYPE OF ACTION | |
|---|---|---|
| [ ] Notice of Intent | [ ] Abandonment | [ ] Change of Plans |
| [X] Subsequent Report | [ ] Recompletion | [ ] New Construction |
| [ ] Final Abandonment Notice | [ ] Plugging Back | [ ] Non-Routine Fracturing |
| | [ ] Casing Repair | [ ] Water Shut-Off |
| | [ ] Altering Casing | [ ] Conversion to Injection |
| | [X] Other Weekly Status | [ ] Dispose Water |
| | | (Note: Report results of multiple completion on Well Completion or Recompletion Report and Log form.) |

13. Describe Proposed or Completed Operations (Clearly state all pertinent details, and give pertinent dates, including estimated date of starting any proposed work. If well is directionally drilled, give subsurface locations and measured and true vertical depths for all markers and zones pertinent to this work.)*

## WEEKLY STATUS REPORT FOR THE PERIOD OF 11/12/98 - 11/25/98

Perf CP sds @ 5742-49' & 5873-90'.
Perf A sds @ 5408-5411' & 5419-5425'.
Perf D/YDC sds @ 4803-4808', 4855-4858', 4862-4868' & 4906-4914'.
Swab well. Trip production tbg.
Place well on production @ 1:30 pm, 11/21/98.

RECEIVED
DEC 03 1998
DIV. OF OIL, GAS & MINING

14. I hereby certify that the foregoing is true and correct
Signed Shannon Smith Title Engineering Secretary Date 11/30/98

(This space for Federal or State office use)
Approved by _____ Title _____ Date _____
Conditions of approval, if any:
CC: UTAH DOGM

Title 18 U.S.C. Section 1001, makes it a crime for any person knowingly and willfully to make to any department or agency of the United States any false, fictitious or fradulent statements or representations as to any matter within its jurisdiction.

FORM 3160-4
(July 1992)

RECEIVED FEB 08 1999 DIV. OF OIL, GAS & MINING

SUBMIT IN DU ATE* (See other instructions ons reverse side)

FORM APPROVED
OMB NO. 1004-0137
Expires: February 28, 1995

# UNITED STATES
# DEPARTMENT OF THE INTERIOR
## BUREAU OF LAND MANAGEMENT

# WELL COMPLETION OR RECOMPLETION REPORT AND LOG*

5. LEASE DESIGNATION AND SERIAL NO.: U-77338

6. IF INDIAN, ALLOTTEE OR TRIBE NAME:

7. UNIT AGREEMENT NAME:

8. FARM OR LEASE NAME, WELL NO.: SOUTH WELLS DRAW 11-4-9-16

9. API WELL NO.: 43-013-32104

10. FIELD AND POOL OR WILDCAT: MONUMENT BUTTE

11. SEC., T., R., M., OR BLOCK AND SURVEY OR AREA: Section 4, T09S R16E

1a. TYPE OF WORK: OIL WELL [X] GAS WELL [ ] DRY [ ] Other

1b. TYPE OF WELL: NEW WELL [X] WORK OVER [ ] DEEPEN [ ] PLUG BACK [ ] DIFF RESVR. [ ] Other

2. NAME OF OPERATOR: INLAND RESOURCES INC.

3. ADDRESS AND TELEPHONE NO.: 410 17th St. Suite 700 Denver, CO 80202

4. LOCATION OF WELL (Report locations clearly and in accordance with any State requirements.*)
At Surface: NW/NE
At top prod. Interval reported below: 2067' FSL 1990' FWL
At total depth:

14. PERMIT NO.: 43-013-32104 DATE ISSUED: 9/28/98

12. COUNTY OR PARISH: DUCHESNE 13. STATE: UT

| 15. DATE SPUDDED | 16. DATE T.D. REACHED | 17. DATE COMPL. (Ready to prod.) | 18. ELEVATIONS (DF, RKB, RT, GR, ETC.)* | 19. ELEV. CASINGHEAD |
|---|---|---|---|---|
| 10/21/98 | 10/28/98 | 11/21/98 | 5744' KB 5734' GL | |

| 20. TOTAL DEPTH, MD & TVD | 21. PLUG BACK T.D., MD & TVD | 22. IF MULTIPLE COMPL., HOW MANY* | 23. INTERVALS DRILLED BY | ROTARY TOOLS | CABLE TOOLS |
|---|---|---|---|---|---|
| ~~6000'~~ 6014' / Brian Harris | 6003' | | ------> | X | |

24. PRODUCING INTERVAL(S), OF THIS COMPLETION--TOP, BOTTOM, NAME (MD AND TVD)*: Green River 4803' - 5890'

25. WAS DIRECTIONAL SURVEY MADE: No

26. TYPE ELECTRIC AND OTHER LOGS RUN: 11-17-98 DIGL/SP/GR/CAL - CN/CD/GR - CBL/GR/CCL 2-8-99

27. WAS WELL CORED: No

23. CASING RECORD (Report all strings set in well)

| CASING SIZE/GRADE | WEIGHT, LB./FT. | DEPTH SET (MD) | HOLE SIZE | TOP OF CEMENT, CEMENTING RECORD | AMOUNT PULLED |
|---|---|---|---|---|---|
| 8-5/8 | 24# | 341' | 12-1/4 | 140 sx Class "G" | |
| 5-1/2 | 15.5# | 6014' | 7-7/8 | 295 sx Premium Lite Modified | |
| | | | | 310 sx Class "G" | |

29. LINER RECORD

| SIZE | TOP (MD) | BOTTOM (MD) | SACKS CEMENT* | SCREEN (MD) |
|---|---|---|---|---|
| | | | | |

30. TUBING RECORD

| SIZE | DEPTH SET (MD) | PACKER SET (MD) |
|---|---|---|
| 2-7/8 | EOT @ 5915' | TA @ 5702' |

31. PERFORATION RECORD (Interval, size and number)

| INTERVAL | SIZE | NUMBER |
|---|---|---|
| CP 5742-49', 5873-90' | 4 SPF | 96 Holes |
| A 5408-5411' - 5419-5425' | 4 SPF | 36 Holes |
| D/YDC 4803-4808', 4855-4858', 4862-4868', 4906-4914' | 4 SPF | 88 Holes |

32. ACID, SHOT, FRACTURE, CEMENT SQUEEZE, ETC.

| DEPTH INTERVAL (MD) | AMOUNT AND KIND OF MATERIAL USED |
|---|---|
| 5742' - 5890' | 120,312# 20/40 sd in 603 bbls Viking I-25 |
| 5408' - 5425' | 84,000# 20/40 sd in 451 bbls Viking I-25 |
| 4803' - 4914' | 92,438# 20/40 sd in 518 bbls Viking I-25 |

33.* PRODUCTION

| DATE FIRST PRODUCTION | PRODUCTION METHOD (Flowing, gas lift, pumping--size and type of pump) | WELL STATUS (Producing or shut-in) |
|---|---|---|
| 11/21/98 | 2-1/2 x 1-1/2 x 16' RHAC Pump | Producing |

| DATE OF TEST | HOURS TESTED | CHOKE SIZE | PROD'N. FOR TEST PERIOD | OIL--BBLS. | GAS--MCF. | WATER--BBL. | GAS-OIL RATIO |
|---|---|---|---|---|---|---|---|
| 10 day ave | 11/1/98 | | ----> | 93 | 141 | 6 | 1.52 |

| FLOW. TUBING PRESS. | CASING PRESSURE | CALCULATED 24-HOUR RATE | OIL-BBL. | GAS--MCF. | WATER--BBL. | OIL GRAVITY-API (CORR.) |
|---|---|---|---|---|---|---|
| | | ----> | | | | |

34. DISPOSITION OF GAS (Sold, used for fuel, vented, etc.): Sold & Used for Fuel

TEST WITNESSED BY:

35. LIST OF ATTACHMENTS: Logs In Item #26

36. I hereby certify that the foregoing and attached information is complete and correct as determined from all available records

SIGNED: Shannon Smith TITLE: Engineering Secretary DATE: 2/3/99

*(See Instructions and Spaces for Additional Data on Reverse Side)

Title 18 U.S.C. Section 1001. makes it a crime for any person knowingly and willfully to make to any department or agency of the United States any false. fictitious or fraudulent statements or representations as to any matter within its jurisdiction.

37. SUMMARY OF POROUS ZONES: (Show all important zones of porosity and contents thereof; cored intervals, and all drill-stem, tests, including depth interval tested, cushion used, time tool open, flowing and shut-in pressures, and recoveries);

| FORMATION | TOP | BOTTOM | DESCRIPTION, CONTENTS, ETC. |
|---|---|---|---|
| Garden Gulch Mkr | 3823' | | |
| Garden Gulch 2 | 4153' | | |
| Point 3 Mkr | 4415' | | |
| X Mkr | 4673' | | |
| Y-Mkr | 4707' | | |
| Douglas Creek Mkr | 4824' | | |
| BiCarbonate Mkr | 5067' | | |
| B Limestone Mkr | 5186' | | |
| Castle Peak | 5713' | | |
| Basal Carbonate | NDE | | |
| Total Depth | 6000' | | |

38. GEOLOGIC MARKERS

| NAME | TOP | |
|---|---|---|
| | MEAS. DEPTH | TRUE VERT. DEPTH |

Inland
RESOURCES INC.

February 28, 2001

Mr. Dan Jarvis
State of Utah
Division of Oil, Gas and Mining
Post Office Box 145801
Salt Lake City, Utah 84114-5801

RE: Permit Application for Water Injection Well
South Wells Draw #11-4-9-16
Monument Butte Field, South Wells Draw Unit, Lease #UTU-77338
Section 4-Township 9S-Range 16E
Duchesne County, Utah

Dear Mr. Jarvis:

Inland Production Company herein requests approval to convert the South Wells Draw #11-4-9-16 from a producing oil well to a water injection well in the Monument Butte (Green River) Field, South Wells Draw Unit.

I hope you find this application complete; however, if you have any questions or require additional information, please contact George Rooney at (303) 893-0102.

Sincerely,

Bill Pennington
Chief Financial Officer

RECEIVED
MAR 08 2001
DIVISION OF
OIL, GAS AND MINING

410 Seventeenth Street, Suite 700, Denver, CO 80202 • 303-893-0102 • FAX 303-893-0103

**INLAND PRODUCTION COMPANY**

**APPLICATION FOR APPROVAL OF CLASS II INJECTION WELL**

**SOUTH WELLS DRAW FEDERAL #11-4-9-16**

**MONUMENT BUTTE FIELD (GREEN RIVER) FIELD**

**SOUTH WELLS DRAW UNIT**

**LEASE #UTU-77338**

**FEBRUARY 28, 2001**

## TABLE OF CONTENTS


LETTER OF INTENT
COVER PAGE
TABLE OF CONTENTS
UIC FORM 1 – APPLICATION FOR INJECTION WELL (SWD #11-4-9-16)
WELLBORE DIAGRAM OF PROPOSED INJECTION
WORK PROCEDURE FOR INJECTION CONVERSION
COMPLETED RULE R615-5-1 QUESTIONNAIRE
COMPLETED RULE R615-5-2 QUESTIONNAIRE

| | |
|---|---|
| ATTACHMENT A | ONE-HALF MILE RADIUS MAP |
| ATTACHMENT A-1 | WELL LOCATION PLAT |
| ATTACHMENT B | LIST OF SURFACE OWNERS WITHIN ONE-HALF MILE RADIUS |
| ATTACHMENT C | CERTIFICATION FOR SURFACE OWNER NOTIFICATION |
| ATTACHMENT E | WELLBORE DIAGRAM – S. WELLS DRAW FED #11-4-9-16 |
| ATTACHMENT E-1 | WELLBORE DIAGRAM – WELLS DRAW FED #6-4-9-16 |
| ATTACHMENT E-2 | WELLBORE DIAGRAM – WELLS DRAW FED #7-4-9-16 |
| ATTACHMENT E-3 | WELLBORE DIAGRAM – S. WELLS DRAW FED #10-4-9-16 |
| ATTACHMENT E-4 | WELLBORE DIAGRAM – NGC FEDERAL #12-4G-9-16 |
| ATTACHMENT E-5 | WELLBORE DIAGRAM – MONUMENT FED #13-4-9-16 |
| ATTACHMENT E-6 | WELLBORE DIAGRAM – BALCRON MON FED #14-4-9-16 |
| ATTACHMENT E-7 | WELLBORE DIAGRAM – S. WELLS DRAW FED #14A-4-9-16 |
| ATTACHMENT E-8 | WELLBORE DIAGRAM – S. WELLS DRAW FED #15-4-9-16 |
| ATTACHMENT E-9 | WELLBORE DIAGRAM – FEDERAL #21-4G-9-16 |
| ATTACHMENT E-10 | WELLBORE DIAGRAM – CASTLE PEAK FED #43-5-9-16 |
| ATTACHMENT E-11 | WELLBORE DIAGRAM – BALCRON FEDERAL #21-9Y-9-16 |
| ATTACHMENT F | WATER ANALYSIS |
| ATTACHMENT G | FRACTURE GRADIENT CALCULATIONS |
| ATTACHMENT G-1 | FRACTURE REPORTS DATED 11-13-98, 11-15-98 and 11-18-98 |
| ATTACHMENT H | WORK PROCEDURE FOR PROPOSED PLUGGING AND ABANDONMENT |
| ATTACHMENT H-1 | WELLBORE DIAGRAM OF PROPOSED PLUGGED WELL |

STATE OF UTAH
DIVISION OF OIL, GAS AND MINING

APPLICATION FOR INJECTION WELL - UIC FORM 1

OPERATOR Inland Production Company
ADDRESS 410 17th Street, Suite 700
Denver, Colorado 80202

Well Name and number: South Wells Draw #11-4-9-16
Field or Unit name: Monument Butte (Green River) S. Wells Draw Unit Lease No. U-77338
Well Location: QQ NE/SW section 4 township 9S range 16E county Duchesne

Is this application for expansion of an existing project? ..... Yes [ X ] No [ ]
Will the proposed well be used for: Enhanced Recovery? ..... Yes [ X ] No [ ]
Disposal? ..... Yes [ ] No [ X ]
Storage? ..... Yes [ ] No [ X ]
Is this application for a new well to be drilled? ..... Yes [ ] No [ X ]
If this application is for an existing well,
has a casing test been performed on the well?..... Yes [ ] No [ X ]
Date of test:
API number: 43-013-32104

Proposed injection interval: from 4803 to 5890
Proposed maximum injection: rate 500 bpd pressure 2357 psig
Proposed injection zone contains [x ] oil, [ ] gas, and/or [ ] fresh water within 1/2 mile of the well.

IMPORTANT: Additional information as required by R615-5-2 should accompany this form.

List of Attachments: Attachments "A" through "H-1"

I certify that this report is true and complete to the best of my knowledge.

Name: Bill Pennington Signature Bill Pennington
Title Chief Financial Officer Date February 28, 2001
Phone No. (303) 893-0102

(State use only)
Application approved by Title
Approval Date

Comments:

RECEIVED
MAR 08 2001
DIVISION OF
OIL, GAS AND MINING

# South Wells Draw Fed #11-4-9-16

Spud Date: 10/21/98
Put on Production: 11/21/98
GL: 5734' KB: 5744'

Initial Production: 93 BOPD;
141 MCFD; 6 BWPD

Proposed Injection
Wellbore Diagram

## SURFACE CASING

CSG SIZE: 8-5/8"

GRADE: J-55

WEIGHT:24#

DEPTH LANDED: 326'

HOLE SIZE:12-1/4"

CEMENT DATA: 140 sxs Premium cmt, est 6 bbls to surf. Cmt fell. Pump 6 bbl "G" cmt down 1" string. Est. 2 bbl to surface

## PRODUCTION CASING

CSG SIZE: 5-1/2"

GRADE: J-55

WEIGHT: 15.5#

LENGTH: 137 jts. (6005')

SET AT: 6014' KB

HOLE SIZE: 7-7/8"

CEMENT DATA: 295 sxs Premium modified mixed & 310 sxs class G

CEMENT TOP AT: 484' per cement bond log(Schlumberger)

2850

## TUBING

SIZE/GRADE/WT.: 2-7/8" / J-55 / 6.5#

NO. OF JOINTS: 195 jts

TUBING ANCHOR: 5584'

SEATING NIPPLE: 2-7/8"

TOTAL STRING LENGTH: EOT @ 5796'KB

SN LANDED AT: 5765'KB

## FRAC JOB

**11/12/98 5742'-5890'** **Frac CP-0.5 & CP-2 sands as follows:** 120,312# 20/40 sand in 603 bbls Viking I-25 fluid. Perfs broke back @ 3263 psi @ 18.5 BPM. Treated @ avg press of 1650 psi w/avg rate of 35 BPM. ISIP: 2400 psi, 5-min 2175 psi. Flowback on 12/64 choke for 4-1/2 hours and died.

**11/14/98 5408'-5425'** **Frac LODC sand as follows:** 84,000# 20/40 sand in 451 bbls Viking I-25 fluid. Perfs broke back @ 2005 psi. Treated @ avg press of 2500 psi w/avg rate of 33 BPM. W/ sand on perfs pressure increased steadily. Rate was increased to 35 BPM and sand was cut @ blender @ 9#. Screened out w/8.6@ sand on perfs w/1332 gal left to flush. Est 74,200 # sand in perfs, 8,300 @ sand left in casing. ISIP: 3350 psi, 5-min 2450 psi. Flowback on 12/64 choke for 3-1/2 hours and died.

**11/17/98 4803'-4914'** **Frac D-S3, D-1 & D-2 sands as follows:** 92,438# 20/40 sand in 518 bbls Viking I-25 fluid. Perfs broke back @ 3371 psi. Treated @ avg press of 3000 psi w/avg rate of 34 BPM.w/sand on perfs pressure increased steadily. Rate wasincreased to 37 BPM & sand was cut @ blender @ 8.7#. A Full flush was achieved. ISIP: 3550 psi, 5-min 3371 psi. Flowback on 12/64 choke for 1 hour and died.

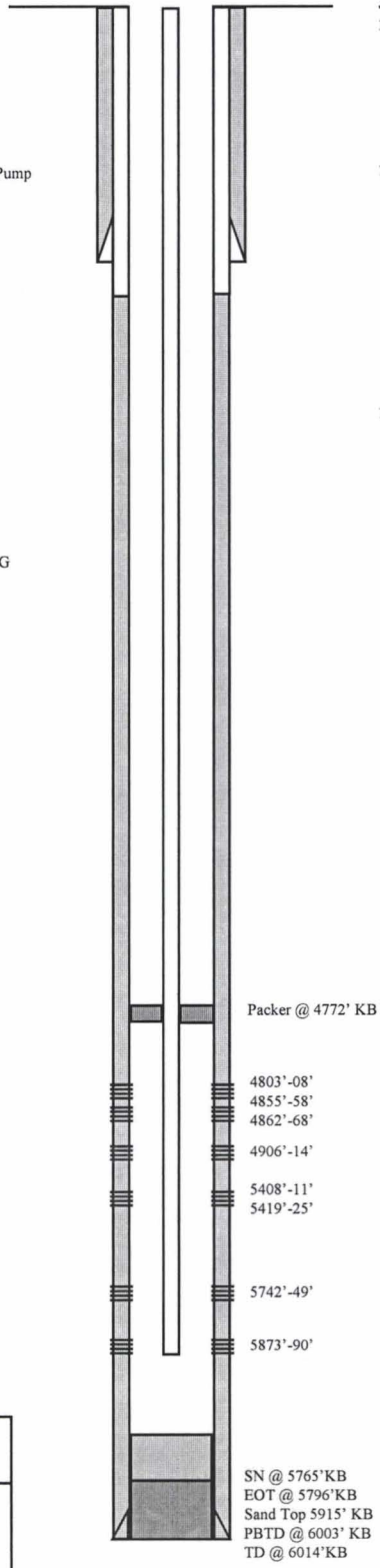


## PERFORATION RECORD

| | | | |
|---|---|---|---|
| 11/11/98 | 5742'-5749' | 4 JSPF | 28 holes |
| 11/11/98 | 5873'-5890' | 4 JSPF | 68 holes |
| 11/13/98 | 5408'-5411' | 4 JSPF | 12 holes |
| 11/13/98 | 5419'-5425' | 4 JSPF | 24 holes |
| 11/16/98 | 4803'-4808' | 4 JSPF | 20 holes |
| 11/16/98 | 4855'-4858' | 4 JSPF | 12 holes |
| 11/16/98 | 4862'-4868' | 4 JSPF | 24 holes |
| 11/16/98 | 4906'-4914' | 4 JSPF | 32 holes |

Inland Resources Inc.

**South Wells Draw #11-4-9-16**

2067 FSL 1990 FWL

NESW Section 4-T9S-R16E

Duchesne Co, Utah

API #43-013-32104; Lease #UTU-77338

## WORK PROCEDURE FOR INJECTION CONVERSION

1. Rig up hot oil truck to casing. Pump water. Unseat pump. Flush rods. Trip out of hole with rods and pump.

2. Trip out of hole with tubing, breaking and doping every connection. Trip in hole with packer and tubing. Rig up water truck to casing. Pump packer fluid. Set packer.

3. Test casing and packer.

4. Rig down and move out.

**REQUIREMENTS FOR INJECTION OF FLUIDS INTO RESERVOIRS**
**RULE R615-5-1**

1. **Operations to increase ultimate recovery, such as cycling of gas, the maintenance of pressure, the introduction of gas, water or other substances into a reservoir for the purpose of secondary or other enhanced recovery or for storage and the injection of water into any formation for the purpose of water disposal shall be permitted only by order of the Board after notice and hearing.**

2. **A request for agency action for authority for the injection of gas, liquified petroleum gas, air, water or any other medium into any formation for any reason, including but not necessarily limited to the establishment of or the expansion of waterflood projects, enhanced recovery projects, and pressure maintenance projects shall contain:**

   **2.1 The name and address of the operator of the project.**

   Inland Production Company
   410 17th Street, Suite 700
   Denver, Colorado 80202

   **2.2 A plat showing the area involved and identifying all wells, including all proposed injection wells, in the project area and within one-half mile of the project area.**

   See Attachment A.

   **2.3 A full description of the particular operation for approval is requested.**

   Approval is requested to convert the S. Wells Draw Fed #11-4-9-16 from a producing oil well to a water injection well in the Monument Butte (Green River) Field, South Wells Draw Unit.

   **2.4 A description of the pools from which the identified wells are producing or have produced.**

   The proposed injection well will inject into the Green River Formation.

   **2.5 The names, description and depth of the pool or pools to be affected.**

   The injection zone is in the Green River Formation. In the S. Wells Draw Federal #11-4-9-16 well, the proposed injection zone is from 4803'- 5890'. The confining stratum directly above and below the injection zones is the Douglas Creek Member of the Green River Formation, with the Douglas Creek Marker top at 4824'.

   **2.6 A copy of a log of a representative well completed in the pool.**

   The referenced log for the S. Wells Draw Fed #11-4-9-16 is on file with the Utah Division of Oil, Gas and Mining.

**2.7 A statement as to the type of fluid to be used for injection, its source and the estimated amounts to be injected daily.**

The primary type and source of fluid to be used for injection will be culinary water from the Johnson Water District supply line. The secondary type of fluid to be used for injection will be culinary water from the Johnson Water District commingled with produced water. The average estimated injection of fluids will be at a rate of 300 BPD, and the estimated maximum injection will be at a rate of 500 BPD.

**2.8 A list of all operators and surface owners within one-half mile radius of the proposed project.**

See Attachment B.

**2.9 An affidavit certifying that said operators or owners and surface owners within a one-half mile radius have been provided a copy of the petition for injection.**

See Attachment C.

**2.10 Any additional information the Board may determine is necessary to adequately review the petition.**

Inland Production Company will supply any additional information requested by the Utah Division of Oil, Gas and Mining.

**4.0 Establish recovery projects may be expanded and additional wells placed on injection only upon authority from the Board after notice and hearing or by administrative approval.**

This proposed injection well is on a Federal lease (Lease #UTU-77338) in the Monument Butte (Green River) Field, South Wells Draw Unit, and this request is for administrative approval.

**REQUIREMENTS FOR CLASS II INJECTION WELLS INCLUDING WATER DISPOSAL, STORAGE AND ENHANCED RECOVERY WELLS**
**SECTION V – RULE R615-5-2**

1. **Injection well shall be completed, equipped, operated, and maintained in a manner that will prevent pollution and damage to any USDW, or other resources and will confine injected fluids to the interval approved.**

2. **The application for an injection well shall include a properly completed Form DOGM-UIC-1 and the following:**

   2.1 **A plat showing the location of the injection well, all abandoned or active wells within a one-half mile radius of the proposed wells, and the surface owner and the operator of any lands or producing leases, respectively, within a one-half mile radius of the proposed injection well.**

   See Attachments A and B.

   2.2 **Copies of electrical or radioactive logs, including gamma ray logs, for the proposed well run prior to the installation of casing and indicating resistivity, spontaneous potential, caliper and porosity.**

   All logs are on file with the Utah Division of Oil, Gas and Mining.

   2.3 **A copy of a cement bond or comparable log run for the proposed injection well after casing was set and cemented.**

   A copy of the cement bond log is on file with the Utah Division of Oil, Gas and Mining.

   2.4 **Copies of logs already on file with the Division should be referenced, but need not be refiled.**

   All copies of logs are on file with the Utah Division of Oil, Gas and Mining.

   2.5 **A description of the casing or proposed casing program of the injection well and of the proposed method for testing the casing before use of the well.**

   The casing program is 8-5/8", 24#, J-55 surface casing run to 326' GL, and 5-1/2" 15.5# J-55 casing run from surface to 6014' KB. A casing integrity test will be conducted at the time of conversion. See Attachment E.

   2.6 **A statement as to the type of fluid to be used for injection, its source and estimated amounts to be injected daily.**

   The primary type and source of fluid to be used for injection will be culinary water from the Johnson Water District supply line. The secondary type of fluid to be used for injection will be culinary water from the Johnson Water District commingled with produced water. The estimated average rate of injection will be 300 BPD, and the estimated maximum rate of injection will be 500 BPD.

   2.7 **Standard laboratory analysis of the fluid to be injected, the fluid in the formation into which the fluid is being injected, and the compatibility of the fluids.** See Attachment F.

**The proposed average and maximum injection pressures.**

The proposed average injection pressure will be approximately 1100 psig and the maximum injection pressure will not exceed 2357 psig.

**2.8 Evidence and data to support a finding that the proposed injection well will not initiate fractures through the overlying strata or a confining interval that could enable the injected fluid or formation fluid to enter the fresh water strata.**

The minimum fracture gradient for the S. Wells Draw Fed #11-4-9-16, for proposed zones (4803' - 5890') calculates at 0.846 psig/ft. The maximum injection pressures will be limited so as not to exceed this gradient. A step rate test will be performed periodically to ensure we are below parting pressure. The proposed maximum injection pressure is 2357 psig. See Attachment G through G-1.

**2.9 Appropriate geological data on the injection interval and confining beds, including the geologic name, lithologic description, thickness, depth, and lateral extent.**

In the S. Wells Draw Fed #11-4-9-16, the injection zone (4803' – 5890') is in the Douglas Creek member of the Green River Formation. The reservoir is a very fine-grained sandstone with minor imbedded shale streaks. The estimated porosity is 13%. The Douglas Creek member is composed of porous and permeable lenticular calcareous sandstone and low porosity carbonates and calcareous shale. The porous and lenticular sandstone varies in thickness from 0-31' and is confined to the Monument Butte Field. Outside the Monument Butte Field, the sandstone is composed of tight, very fine, silty, calcareous sandstone, less than 3' thick. The stratum confining the injection zone is composed of tight, moderately calcareous, sandy lacustrine shale. All of the confining strata are impermeable, and will effectively seal off the oil, gas, and water of the injection zone from any strata directly above or below it.

**2.10 A review of the mechanical condition of each well within a one-half mile radius of the proposed injection well to assure that no conduit exists that could enable fluids to migrate up or down the wellbore and enter the improper intervals.**

See Attachments E through E-11.

Additionally, the injection system will be equipped with high and low pressure shut down devices that will automatically shut in injection waters if a system blockage or leakage occurs. One way check valves will also ensure proper flow management. Relief valves will also be utilized for high-pressure relief.

**2.11 An affidavit certifying that a copy of the application has been provided to all operators or owners, and surface owners within a one-half mile radius of the proposed injection well.**

See Attachment C.

**2.12 Any other information that the Board or Division may determine is necessary to adequately review the application.**

Inland Production Company will supply any requested information to the Board or Division.

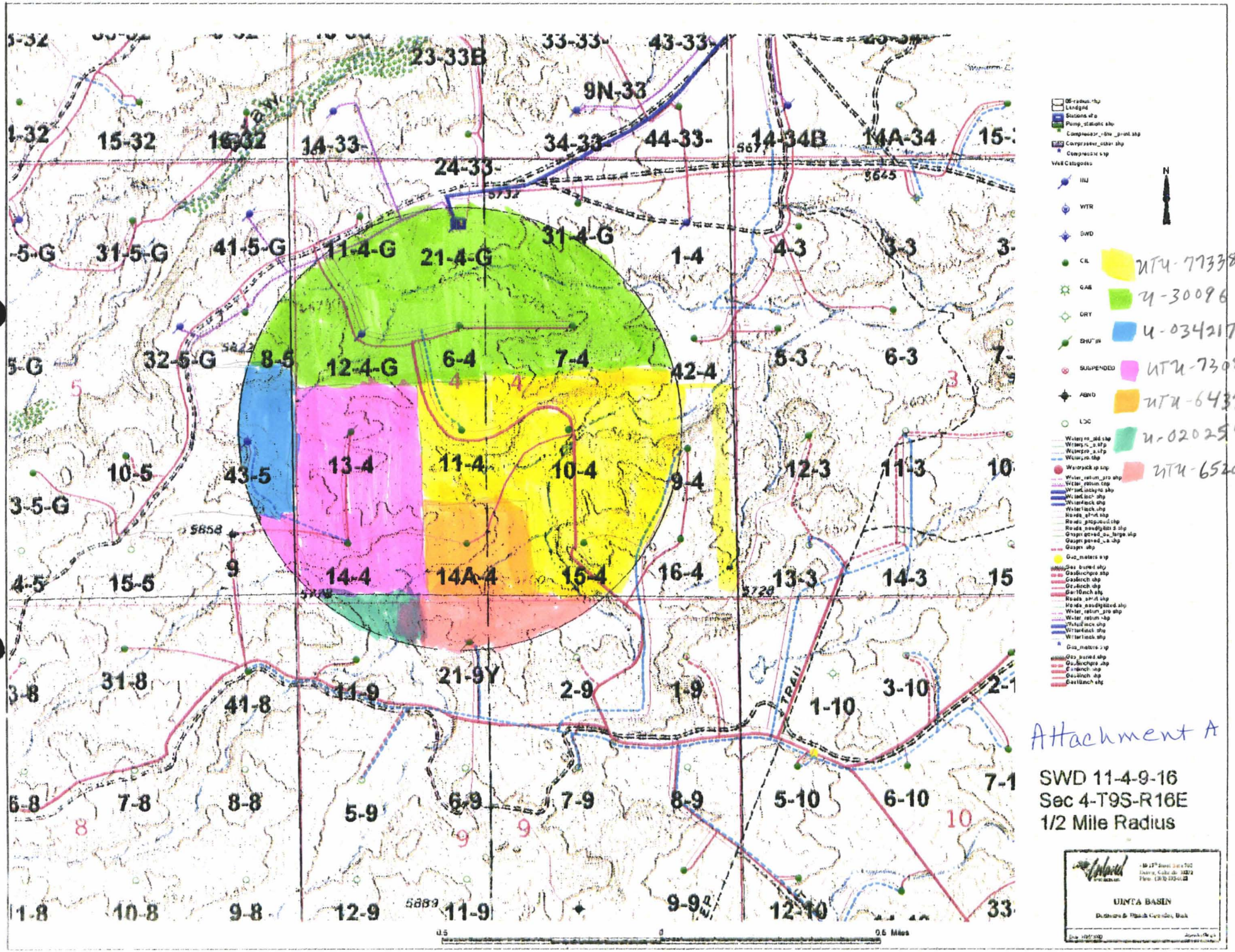


Attachment A

SWD 11-4-9-16
Sec 4-T9S-R16E
1/2 Mile Radius

UINTA BASIN

Attachment A-1

# T9S, R16E, S.L.B.&M.

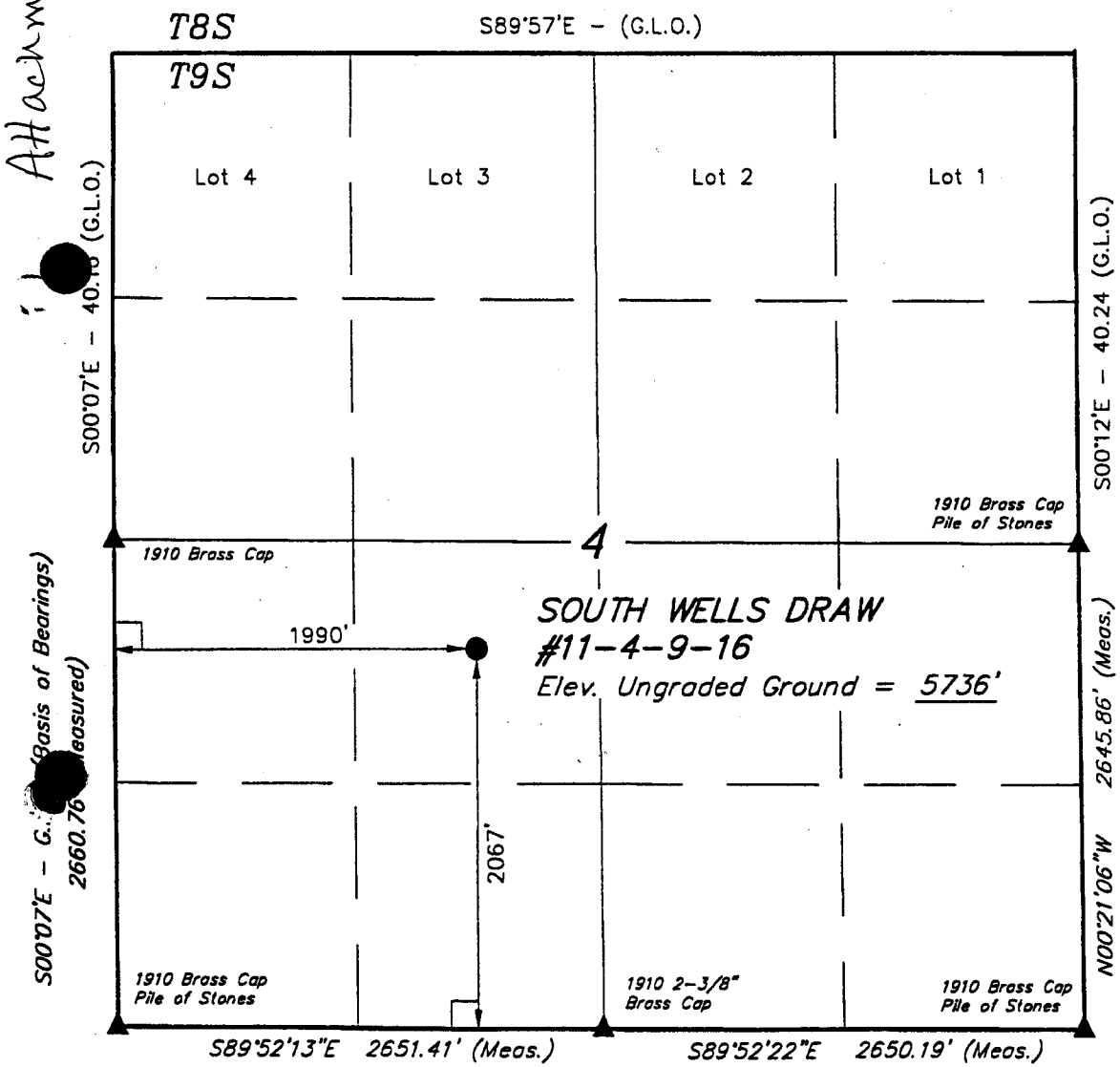


LEGEND:

└ = 90° SYMBOL

● = PROPOSED WELL HEAD.

● = SECTION CORNERS LOCATED.

## INLAND PRODUCTION CO.

Well location, SOUTH WELLS DRAW #11-4-9-16, located as shown in the NE 1/4 SW 1/4 of Section 4, T9S, R16E, S.L.B.&M. Duchesne County, Utah.

### BASIS OF ELEVATION

SPOT ELEVATION AT THE SOUTHWEST CORNER OF SECTION 4, T9S, R16E, S.L.B.&M. TAKEN FROM THE MYTON SW QUADRANGLE, UTAH, DUCHESNE COUNTY, 7.5 MINUTE QUAD. (TOPOGRAPHIC MAP) PUBLISHED BY THE UNITED STATES DEPARTMENT OF THE INTERIOR, GEOLOGICAL SURVEY. SAID ELEVATION IS MARKED AS BEING 5778 FEET.

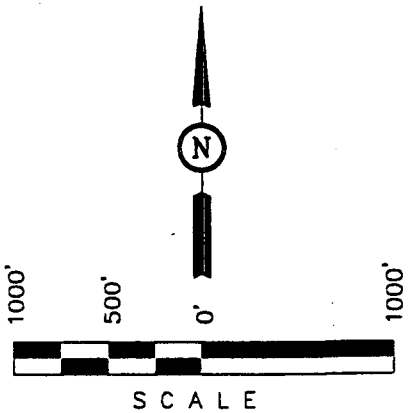


### CERTIFICATE

THIS IS TO CERTIFY THAT THE ABOVE PLAT WAS PREPARED FROM FIELD NOTES OF ACTUAL SURVEYS MADE BY ME OR UNDER MY SUPERVISION AND THAT THE SAME ARE TRUE AND CORRECT TO THE BEST OF MY KNOWLEDGE AND BELIEF.

Robert L Kay

REGISTERED LAND SURVEYOR
REGISTRATION NO. 161319
STATE OF UTAH


UINTAH ENGINEERING & LAND SURVEYING
85 SOUTH 200 EAST - VERNAL, UTAH 84078
(435) 789-1017


| | | |
|---|---|---|
| SCALE 1" = 1000' | DATE SURVEYED: 07-20-98 | DATE DRAWN: 07-22-98 |
| PARTY J.F B.B. D.R.B. | REFERENCES G.L.O. PLAT | |
| WEATHER WARM | FILE INLAND PRODUCTION CO. | |

Attachment B



| # | Land Description | Minerals Ownership & Expires | Minerals Leased By | Surface Rights |
|---|---|---|---|---|
| 1 | Township 9 South, Range 16 East<br>Section 5: N/2SE/4 | U-034217-A<br>HBP | Inland Production Company | (Surface Rights)<br>USA |
| 2 | Township 9 South, Range 16 East<br>Section 8: N/2NE/4 | U-020255<br>HBP | Inland Production Company | (Surface Rights)<br>USA |
| 3 | Township 9 South, Range 16 East<br>Section 4: W/2SW/4<br>Section 5: S/2SE/4 | UTU-73086<br>HBP | Inland Production Company | (Surface Rights)<br>USA |
| 4 | Township 9 South, Range 16 East<br>Section 8: SE/4NE/4<br>Section 9: NE/4, NE/4NW/4, S/2NW/4<br>Section 10: N/2 NW/4<br>Section 35: W/2 | UTU-65207<br>HBP | Inland Production Company<br>Yates Petroleum Corporation<br>Abo Petroleum Corporation<br>Yates Drilling Company<br>Myco Industries | (Surface Rights)<br>USA |

Attachment B



| # | Land Description | Minerals Ownership & Expires | Minerals Leased By | Surface Rights |
|---|---|---|---|---|
| 5 | Township 9 South Range 16 East<br>Section 3: SE/4<br>Section 4: SE/4SW/4<br>Section 8: SW/4NE/4, SE/4<br>Section 9: SW/4SW/4<br>Section 17: NE/4<br>Section 18: Lots 3,4, E/2SW/4, SE/4<br>Section 19: Lots 1,2, NE/4, E/2NW/4<br>Section 21: N/2<br>Section 22: W/2NE/4, SE/4NE/4, NW/4 | UTU-64379<br>HBP | Inland Production Company<br>Yates Petroleum Corporation | (Surface Rights)<br>USA |
| 6 | Township 9 South, Range 16 East<br>Section 4: Lots 1-4, S/2N/2;<br>Section 5: Lots 1-3, S/2NE/4,<br>SE/4NW/4, NE/4SW/4 | UTU-30096<br>HBP | Inland Production Company<br>Key Production Company, Inc | (Surface Rights)<br>USA |
| 7 | Township 9 South, Range 16 East<br>Section 3: Lots 3 & 4, S/2NW, SW/4<br>Section 4: NE/4SW/4, SE | UTU-77388<br>HBP | Inland Production Company | (Surface Rights)<br>USA |

**ATTACHMENT C**

**CERTIFICATION FOR SURFACE OWNER NOTIFICATION**

RE: Application for Approval of Class II Injection Well
S. Wells Draw Fed #11-4-9-16

I hereby certify that a copy of the injection application has been provided to all surface owners within a one-half mile radius of the proposed injection well.

Signed: Bill Pennington
Inland Production Company
Bill Pennington
Chief Financial Officer

Sworn to and subscribed before me this 5th day of March, 2001.

Notary Public in and for the State of Colorado: Janet K. Specht

My Commission Expires: 7/16/01

JANET K. SPECHT NOTARY PUBLIC STATE OF COLORADO

Attachment E

# South Wells Draw Fed #11-4-9-16

Spud Date: 10/21/98
Put on Production: 11/21/98
GL: 5734' KB: 5744'

Initial Production: 93 BOPD; 141 MCFD; 6 BWPD

Wellbore Diagram

## SURFACE CASING

CSG SIZE: 8-5/8"

GRADE: J-55

WEIGHT:24#

DEPTH LANDED: 326'

HOLE SIZE:12-1/4"

CEMENT DATA: 140 sxs Premium cmt, est 6 bbls to surf. Cmt fell. Pump 6 bbl "G" cmt down 1" string. Est. 2 bbl to surface

## PRODUCTION CASING

CSG SIZE: 5-1/2"

GRADE: J-55

WEIGHT: 15.5#

LENGTH: 137 jts. (6005')

SET AT: 6014' KB

HOLE SIZE: 7-7/8"

CEMENT DATA: 295 sxs Premium modified mixed & 310 sxs class G

CEMENT TOP AT: 484' per cement bond log(Schlumberger)

2550

## TUBING

SIZE/GRADE/WT.: 2-7/8" / J-55 / 6.5#

NO. OF JOINTS: 195 jts

TUBING ANCHOR: 5584'

SEATING NIPPLE: 2-7/8"

TOTAL STRING LENGTH: EOT @ 5796'KB

SN LANDED AT: 5765'KB

## SUCKER RODS

POLISHED ROD: 1-1/2" x 22' SM

SUCKER RODS: 4 - 1-1/2" wt rods, 4 - 3/4" scrapered, 127 - 3/4" plain, 95 - 3/4" scrapered.

PUMP SIZE: 2-1/2" x 1-1/2" x 16' RHAC Pump

STROKE LENGTH: 68"

PUMP SPEED, SPM: 4 SPM

LOGS:DIGL/SP/GR/CAL

SDL/DSN/GR

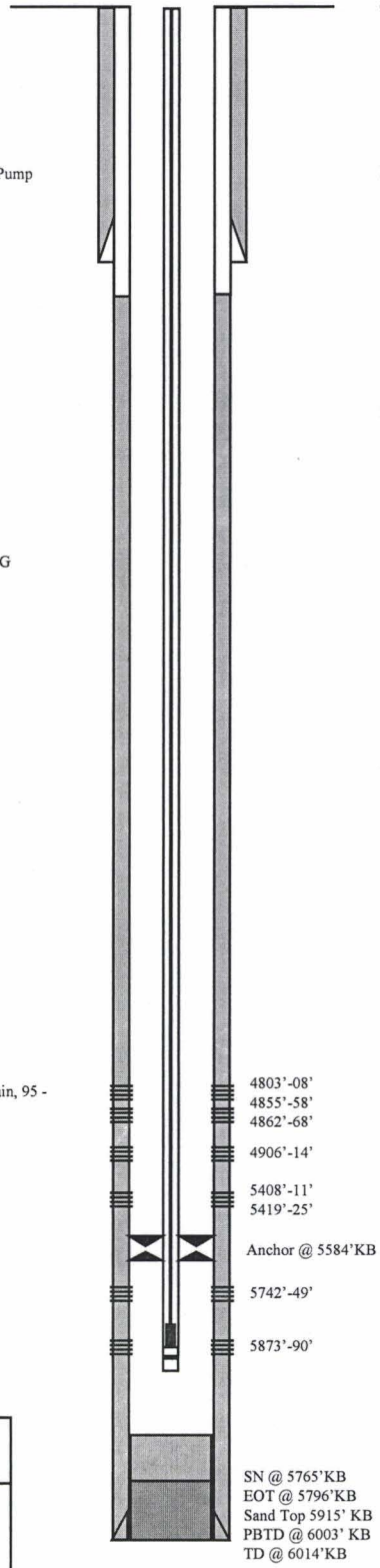


## FRAC JOB

**11/12/98 5742'-5890'** **Frac CP-0.5 & CP-2 sands as follows:** 120,312# 20/40 sand in 603 bbls Viking I-25 fluid. Perfs broke back @ 3263 psi @ 18.5 BPM. Treated @ avg press of 1650 psi w/avg rate of 35 BPM. ISIP: 2400 psi, 5-min 2175 psi. Flowback on 12/64 choke for 4-1/2 hours and died.

**11/14/98 5408'-5425'** **Frac LODC sand as follows:** 84,000# 20/40 sand in 451 bbls Viking I-25 fluid. Perfs broke back @ 2005 psi. Treated @ avg press of 2500 psi w/avg rate of 33 BPM. W/ sand on perfs pressure increased steadily. Rate was increased to 35 BPM and sand was cut @ blender @ 9#. Screened out w/8.6@ sand on perfs w/1332 gal left to flush. Est 74,200 # sand in perfs, 8,300 @ sand left in casing. ISIP: 3350 psi, 5-min 2450 psi. Flowback on 12/64 choke for 3-1/2 hours and died.

**11/17/98 4803'-4914'** **Frac D-S3, D-1 & D-2 sands as follows:** 92,438# 20/40 sand in 518 bbls Viking I-25 fluid. Perfs broke back @ 3371 psi. Treated @ avg press of 3000 psi w/avg rate of 34 BPM.w/sand on perfs pressure increased steadily. Rate wasincreased to 37 BPM & sand was cut @ blender @ 8.7#. A Full flush was achieved. ISIP: 3550 psi, 5-min 3371 psi. Flowback on 12/64 choke for 1 hour and died.

## PERFORATION RECORD

| | | | |
|---|---|---|---|
| 11/11/98 | 5742'-5749' | 4 JSPF | 28 holes |
| 11/11/98 | 5873'-5890' | 4 JSPF | 68 holes |
| 11/13/98 | 5408'-5411' | 4 JSPF | 12 holes |
| 11/13/98 | 5419'-5425' | 4 JSPF | 24 holes |
| 11/16/98 | 4803'-4808' | 4 JSPF | 20 holes |
| 11/16/98 | 4855'-4858' | 4 JSPF | 12 holes |
| 11/16/98 | 4862'-4868' | 4 JSPF | 24 holes |
| 11/16/98 | 4906'-4914' | 4 JSPF | 32 holes |

Inland Resources Inc.

**South Wells Draw #11-4-9-16**

2067 FSL 1990 FWL

NESW Section 4-T9S-R16E

Duchesne Co, Utah

API #43-013-32104; Lease #UTU-77338

Attachment E-1

# Wells Draw #6-4

Spud Date: 1/7/98
Put on Production: 2/6/98
GL: 5721' KB: 5733'

Initial Production: 84 BOPD, 94 MCFD
8 BWPD

Wellbore Diagram

## SURFACE CASING

CSG SIZE: 8-5/8"
GRADE: K-55
WEIGHT: 24#
LENGTH: 7 jts
DEPTH LANDED: 290'
HOLE SIZE: 12-1/4"
CEMENT DATA: 120 sxs Premium, est 6 bbls to surface

## PRODUCTION CASING

CSG SIZE: 5-1/2"
GRADE: J-55
WEIGHT: 15.5#
LENGTH: 140 jts 5997'
HOLE SIZE: 7-7/8"
CEMENT DATA: 380 sxs Hibond & 365 sxs Thixotropic
CEMENT TOP AT: 3286
SET AT: 6007'

## TUBING

SIZE/GRADE/WT: 2-7/8' J-55 6.5#
NO. OF JOINTS: 176
TUBING ANCHOR: 5486'
SEATING NIPPLE: 2-7/8"
TOTAL STRING LENGTH:
SN LANDED AT: 5592'

## SUCKER RODS

POLISHED ROD: 1-1/2" X 22
SUCKER RODS: 4-11/2" weight rods; 4-3/4" scrapered; 119-3/4" plain; 96-3/4" scrapered
TOTAL ROD STRING LENGTH:
PUMP NUMBER:
PUMP SIZE: 2-1/2' X 1-3/4" X 15-1/2' RHAC
STROKE LENGTH: 74"
PUMP SPEED, SPM: 7 SPM
LOGS: DIGL/SP/GR/CAL (6022'-300')
DSN/SDL/GR (5984'-3000')

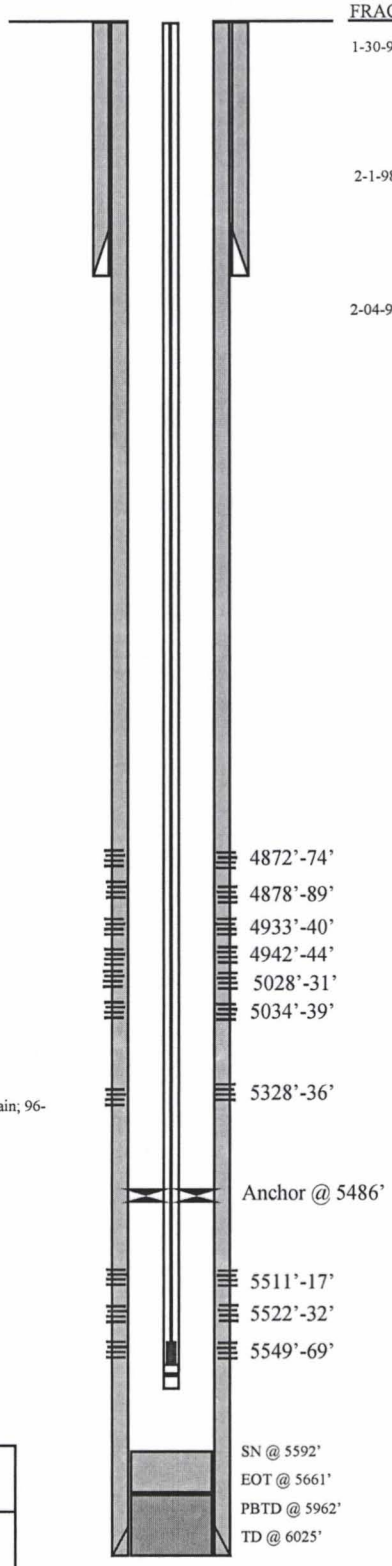


## FRAC JOB

| | | |
|---|---|---|
| 1-30-98 | 5511'-5569 | Frac LDC sand as follows: 120,300# 20/40 sd in 582 bbls Delta frac. Breakdown @ 2640 psi. Treated @ avg press of 1980 psi w/avg rate of 34.9 BPM . ISIP - 2411 psi, 5 min 2168 psi. Flowback on 12/64 ck for 4-1/2 hrs & died. |
| 2-1-98 | 5328'-5336' | Frac A sand as follows: 81,300 # sd in 459 bbls Delta frac. Breakdown @ 2501 psi. Treated @ avg press of 3500 psi w/avg rate of 25 BPM. ISIP - 2094 psi, 5 min 3041 psi. Flowback on 12/64 ck for 2-1/2 hrs & died. |
| 2-04-98 | 4872'-5039' | Frac D/C sand as follows: 113,300 # 20/40 sd in 556 bbls Delta frac. Breakdown @ 1109 psi. Treated w/avg pres of 1600 psi w/avg rate of 30 BPM. ISIP - 2094 psi, 5 min 2026 psi. Flowback on 12/64 ck 2-1/2 hrs & died. |

## PERFORATION RECORD

| | | | |
|---|---|---|---|
| 1-29-98 | 5511'-5517' | 4 JSPF | 24 holes |
| 1-29-98 | 5522'-5532' | 4 JSPF | 40 holes |
| 1-29-98 | 5549'-5569' | 4 JSPF | 80 holes |
| 1-31-98 | 5328'-5336' | 4 JSPF | 32 holes |
| 2-03-98 | 4872'-4874' | 4 JSPF | 8 holes |
| 2-03-98 | 4878'-4889' | 4 JSPF | 44 holes |
| 2-03-98 | 4933'-4940' | 4 JSPF | 28 holes |
| 2-03-98 | 4942'-4944' | 4 JSPF | 8 holes |
| 2-03-98 | 5028'-5031' | 4 JSPF | 12 holes |
| 2-03-98 | 5134'-5139' | 4 JSPF | 20 holes |

Inland Resources Inc.

**Wells Draw #6-4**

1980' FNL and 1980' FEL

SENW Section 4-T9S-R16E

Duchesne Co, Utah

API #43-013-31972; Lease #U-30096

Attachment E-2

# Wells Draw #7-4

Spud Date: 4/15/98
Put on Production: 5/20/98
GL: 5700' KB: 5712'

Initial Production: 126 BOPD, 263 MCFD
9 BWPD

Wellbore Diagram

## SURFACE CASING

CSG SIZE: 8-5/8"
GRADE: J-55
WEIGHT: 24#
LENGTH: 8 jts (311')
DEPTH LANDED: 311'
HOLE SIZE: 12-1/4"
CEMENT DATA: 120 sxs Premiumplus w/2% CC, 2% gel, 1/2 #/sx flocele

## PRODUCTION CASING

CSG SIZE: 5-1/2"
GRADE: J-55
WEIGHT: 15.5#
LENGTH: 141 jts (6007')
HOLE SIZE: 7-7/8"
CEMENT DATA: 395 sxs Hibond 65 modified and 425 sxs Thixotropic w/10% calseal
CEMENT TOP AT: 1790
SET AT: 6019'

## TUBING

SIZE/GRADE/WT: 2-7/8", 6.5#, M-50
NO. OF JOINTS: 171 jts
TUBING ANCHOR: 5314'
SEATING NIPPLE:
TOTAL STRING LENGTH:
SN LANDED AT: 5379'

## SUCKER RODS

POLISHED ROD: 1-1/2"x22'
SUCKER RODS: 4-11/2" weight rods; 4-3/4" scrapered; 112-3/4" plain; 94-3/4" scrapered, 2-4, 1-2'x3/4" pony rods
TOTAL ROD STRING LENGTH:
PUMP NUMBER:
PUMP SIZE: 2-1/2"x1-1/2"x15' RHAC
STROKE LENGTH: 86"
PUMP SPEED, SPM: 6 SPM
LOGS: DIGL/SP/GR/CAL (6047'-298')
DSN/SDL/GR (6013'-3000')

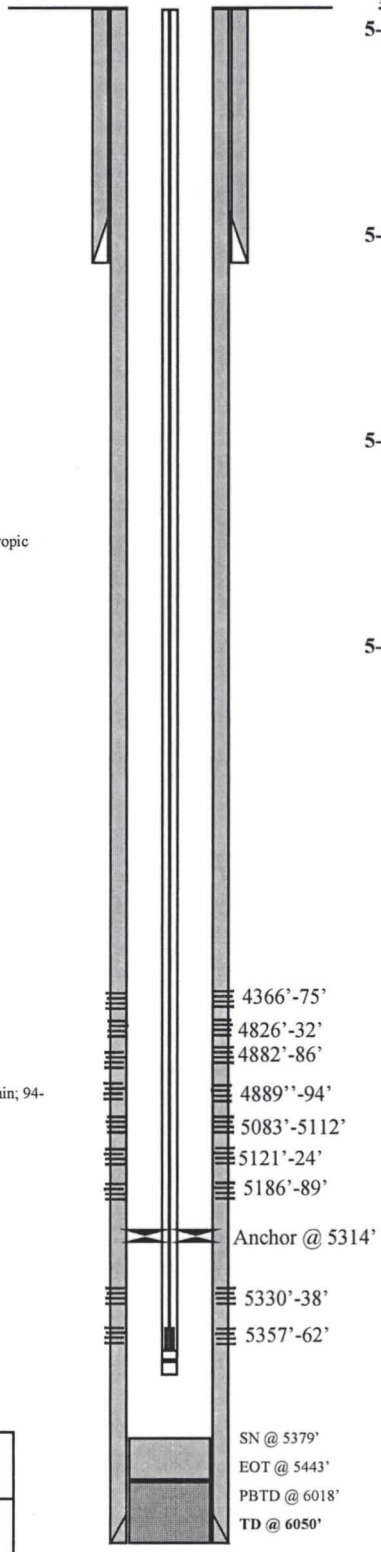


## FRAC JOB

**5-10-98 5330'-5362' Frac A sand as follows:** 88,540# 20/40 sand in 462 bbls Viking. Breakdown @ 3544 psi. Treated w/avg press of 1900 psi w/avg rate of 28 BPM. ISIP-2850 psi, 5 min 2328 psi. Flowback on 12/64" ck for 3 hrs & died.

**5-12-98 5083'-5189' Frac B sand as follows:** 122,680# 20/40 sand in 565 bbls Viking. Breakdown @ 3114 psi. Treated w/avg press of 1450 psi w/avg rate of 34.8 BPM. ISIP-2050 psi, 5 min 1854 psi. Flowback on 12/64" ck for 2-1/2 hrs & died.

**5-13-98 4826'-4894' Frac D/YDC sand as follows:** 104,620# 20/40 sand in 533 bbls Viking. Breakdown @ 2833 psi. Treated w/avg press of 2000 psi w/avg rate of 33 BPM. ISIP-2400 psi, 5 min 2300 psi. Flowback on 12/64" ck for 2 hrs & died.

**5-17-98 4366'-4375' Frac GB sands as follows:** 104,520# 20/40 sand in 505 bbls Delta Frac. Breakdown @ 3350 psi. Treated w/avg press of 2250 psi w/avg rate of 25.5 BPM. ISIP-2650 psi. Flowback on 12/64" ck for 3 hrs & died.

## PERFORATION RECORD

| | | | |
|---|---|---|---|
| 5-08-98 | 5330'-5338' | 4 JSPF | 32 holes |
| 5-08-98 | 5357'-5362' | 4 JSPF | 20 holes |
| 5-12-98 | 5083'-5112' | 2 JSPF | 58 holes |
| 5-12-98 | 5121'-5124' | 4 JSPF | 12 holes |
| 5-12-98 | 5186'-5189' | 4 JSPF | 12 holes |
| 5-14-98 | 4826'-4832' | 4 JSPF | 24 holes |
| 5-14-98 | 4882'-4886' | 4 JSPF | 16 holes |
| 5-14-98 | 4889'-4894' | 4 JSPF | 20 holes |
| 5-16-98 | 4366'-4375' | 4 JSPF | 36 holes |

Inland Resources Inc.

**Wells Draw #7-4**

1980' FNL and 1980' FEL
SWNE Section 4-T9S-R16E
Duchesne Co, Utah
API #43-013-31973; Lease #U-30096

Attachment E-3

# South Wells Draw #10-4

Spud Date: 10/28/99
Put on Production: 11/26/99
GL: 5656' KB: 5666'

Initial Production: 44 BOPD, 59 MCFD
2 BWPD

Wellbore Diagram

## SURFACE CASING

CSG SIZE: 8-5/8"

GRADE: J-55

WEIGHT: 24#

LENGTH: 7 jts (325.47')

DEPTH LANDED: 323.17'

HOLE SIZE: 12-1/4"

CEMENT DATA: 124 sx Class "G" w/2% CC and 1/4#/sk flocele; followed by 17 sx Class "G" w/2% CC and 1/4#/sk flocele.

## PRODUCTION CASING

CSG SIZE: 5-1/2"

GRADE: J-55 and N-80

WEIGHT: 15.5#

LENGTH: 132 jts (5568.93')

HOLE SIZE: 7-7/8"

CEMENT DATA: 265 sx Premium Lite II Modified; and 305 sx 50/50 Poz w/3% KCl, 1/4#/sk cello-flake, 2% gel, .3% SM.

CASING SET AT: 5566.63'

1799

## TUBING

SIZE/GRADE/WT: 2-7/8", 6.5#, M-50

NO. OF JOINTS: 172 jts

TUBING ANCHOR: 5224.27'

SEATING NIPPLE: 1.10'

TOTAL STRING LENGTH: 5396'

SN LANDED AT: 5383.69'

EOT @: 5396'

## SUCKER RODS

POLISHED ROD: 1-1/2"x22'

SUCKER RODS: 4-11/2" weight rods; 10-3/4" guide rods; 107-3/4" plain; 88-3/4" scrapered, 1-8', 1-6', 1-4'x3/4" pony rods

PUMP SIZE: 2-1/2"x1-1/2"x15' RHAC

STROKE LENGTH: 86"

PUMP SPEED, SPM: 5.5 SPM

LOGS: DIGL/SP/GR/CAL
DSN/SDL/GR

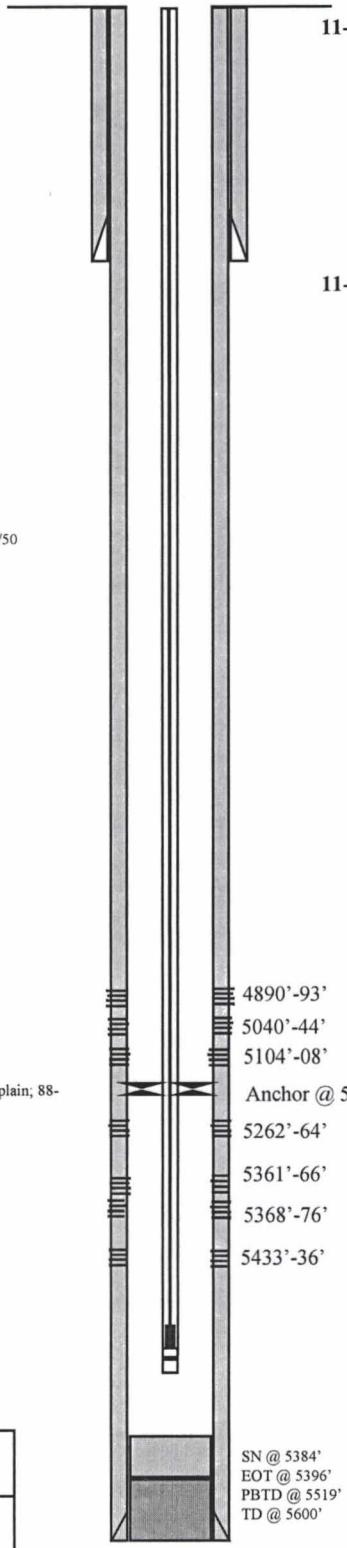


## FRAC JOB

**11-20-99 5262'-436' Frac A/LDC sand as follows:**
102,200# 20/40 sand in 602 bbls Boragel fluid. Breakdown @ 2070 psi. Treated w/avg press of 2521 psi w/avg rate of 35.9 BPM. ISIP-3125 psi, 5 min 2972 psi. Left pressure on well. Re-set plug; released pressure off well. Flowback 2 bbls fluid.

**11-20-99 4890'-5108'**
**Frac C/B sand as follows:**
99,900# 20/40 sand in 547 bbls 30# Boragel. Breakdown @ 1888 psi. Treated w/avg press of 2058 psi w/avg rate of 31.5 BPM. ISIP-2000 psi, 5 min 1938 psi. Flowback on 12/64" ck for 2-1/2 hrs & died.

## PERFORATION RECORD

| | | | |
|---|---|---|---|
| 11-20-99 | 5262'-5264' | 4 JSPF | 8 holes |
| 11-20-99 | 5361'-5366' | 4 JSPF | 20 holes |
| 11-20-99 | 5368'-5376' | 4 JSPF | 32 holes |
| 11-20-99 | 5433'-5436' | 4 JSPF | 12 holes |
| 11-20-99 | 4890'-4893' | 4 JSPF | 12 holes |
| 11-20-99 | 5040'-5044' | 4 JSPF | 16 holes |
| 11-20-99 | 5104'-5108' | 4 JSPF | 16 holes |

Inland Resources Inc.

**South Wells Draw #10-4**

2068' FSL and 2042' FEL

NWSE Section 4-T9S-R16E

Duchesne Co, Utah

API #43-013-32103; Lease #UTU-77338

Attachment E-4

# NGC #12-4G

Spud Date: 4-8-83
Put on Injection: 7-2-98
GL: 5734' KB: 5748'

Initial Production: 55 BOPD, 0 MCFD
16 BWPD

Injection Diagram

## SURFACE CASING

CSG SIZE: 8-5/8"
GRADE: J-55
WEIGHT: 32#
LENGTH: 7 JTS
DEPTH LANDED: 305'
HOLE SIZE: 12-1/4"
CEMENT DATA: 215 skx Class "G"cmt, est 18 bbls to surface

## PRODUCTION CASING

CSG SIZE: 5-1/2"
GRADE: K-55, J-55
WEIGHT: 15.5#
LENGTH: 166 jts (6409')
HOLE SIZE: 7-7/8"
CEMENT DATA: 682 sks BJ Lite
CEMENT TOP AT: 2496' 3506
SET AT: 6518'

## TUBING

SIZE/GRADE/WT: 2-7/8", J-55, 6.5#
NO. OF JOINTS: 192
TUBING ANCHOR: 4826'
SEATING NIPPLE: 2-7/8"
TOTAL STRING LENGTH: ?
SN LANDED AT: 6105'

## SUCKER RODS

POLISHED ROD:
SUCKER RODS:
TOTAL ROD STRING LENGTH:
PUMP NUMBER:
PUMP SIZE:
STROKE LENGTH:
PUMP SPEED, SPM:
LOGS:

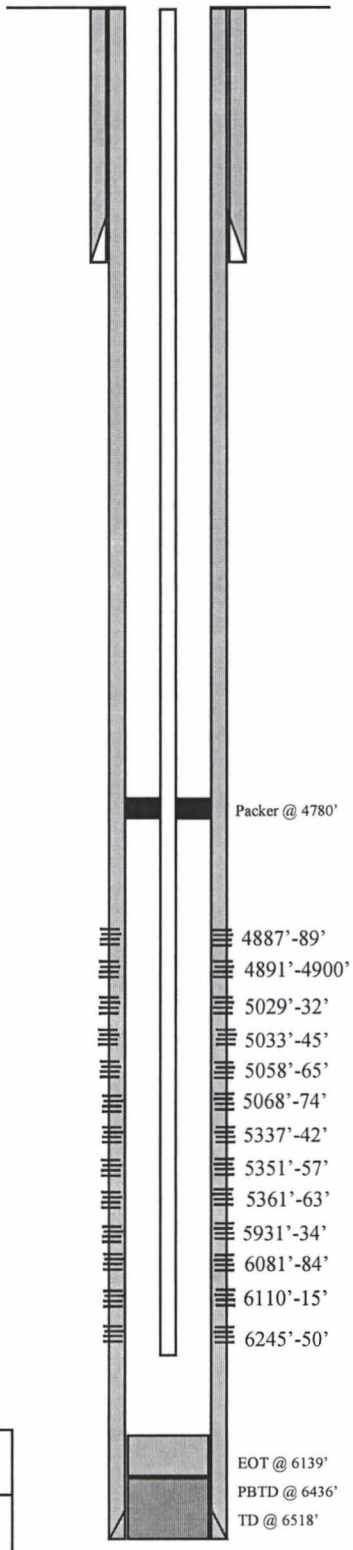


## FRAC JOB

| | | |
|---|---|---|
| **8-26-83** | **5931'-6115'** | **80,000# 20/40 ttl sd, 26,800 gals ttl fluid. Avg rate of 38 BPM w/ avg press of 2500 psi. ISIP-1950 psi, 5 min 1900 psi.** |
| **8-26-83** | **5337'-5367'** | **160,000 ttl sd, 45,940 gals ttl fluid. Avg rate of 37 BPM w/ avg press of 1900 psi. ISIP-1800 psi, 5 min 1710 psi.** |
| **8-30-83** | **5029'-5074'** | **198,000 ttl sd, 55,590 gals ttl fluid. Avg rate of 47 BPM w/ avg press of 2300 psi. ISIP-2100 psi, 5 min 1700 psi.** |
| **9-1-83** | **4887'-4900'** | **99,400# ttl sd, 28,190 ttl fluid. Avg rate of 38 BPM w/avg press of 2300 psi. ISIP-2250 psi, 5 min 1900 psi.** |

## PERFORATION RECORD

| | | | |
|---|---|---|---|
| 8-24-83 | 5931'-5934' | 1 JSPF | 4 holes |
| 8-24-83 | 6081'-6084' | 1 JSPF | 4 holes |
| 8-24-83 | 6110'-6115' | 1 JSPF | 6 holes |
| 8-24-83 | 6245'-6250' | 2 JSPF | 11 holes |
| 8-26-83 | 5337'-5342' | 2 JSPF | 11 holes |
| 8-26-83 | 5351'-5357' | 2 JSPF | 13 holes |
| 8-26-83 | 5361'-5363' | 2 JSPF | 5 holes |
| 8-30-83 | 5029'-5032' | 3 JSPF | 10 holes |
| 8-30-83 | 5033'-5045' | 3 JSPF | 3 holes |
| 8-30-83 | 5058'-5065' | 3 JSPF | 22 holes |
| 8-30-83 | 5068'-5074' | 3 JSPF | 19 holes |
| 8-31-83 | 4891'-4900' | 3 JSPF | 28 holes |
| 8-31-83 | 4887'-4889' | 3 JSPF | 7 holes |

Inland Resources Inc.

**NGC #12-4G**

809 FWL 2083 FNL

SWNW Section 4-T9S-R16E

Duchesne Co, Utah

API #43-013-30699; Lease #U-30096

Attachment E-5

# Monument Federal #13-4-9-16

Spud Date: 1-6-97
Put on Production: 2-4-97
GL: 5761' KB: 5773'

Initial Production: 65 BOPD, 116 MCFD
0 BWPD

Wellbore Diagram

## SURFACE CASING

CSG SIZE: 8-5/8"
GRADE: J-55
WEIGHT: 24#
LENGTH: 5 JTS (253')
DEPTH LANDED: 263'
HOLE SIZE: 12-1/4"
CEMENT DATA: 160 skx Class "G"cmt, est 4 bbls to surface

## PRODUCTION CASING

CSG SIZE: 5-1/2"
GRADE: J-55
WEIGHT: 15.5#
LENGTH: 140 jts
HOLE SIZE: 7-7/8"
CEMENT DATA: 275 sks Pream Lite & 500 sks 50/50 Poz
CEMENT TOP AT: 785' 2805
SET AT: 5925'

## TUBING

SIZE/GRADE/WT: 2-7/8", J-55, 6.5#
NO. OF JOINTS: 168
TUBING ANCHOR: 5221'
SEATING NIPPLE: 2-7/8"
TOTAL STRING LENGTH: ?
SN LANDED AT: ?

## SUCKER RODS

POLISHED ROD: 1-1/2"x22'
SUCKER RODS: 1-6',1-8',1-2'x7/8" pony rods; 212-3/4" plain;
TOTAL ROD STRING LENGTH:
PUMP NUMBER:
PUMP SIZE: 2-1/2"x1-3/4"x16' RHAC
STROKE LENGTH:
PUMP SPEED, SPM:
LOGS: DLL/GR, LDT/CNL

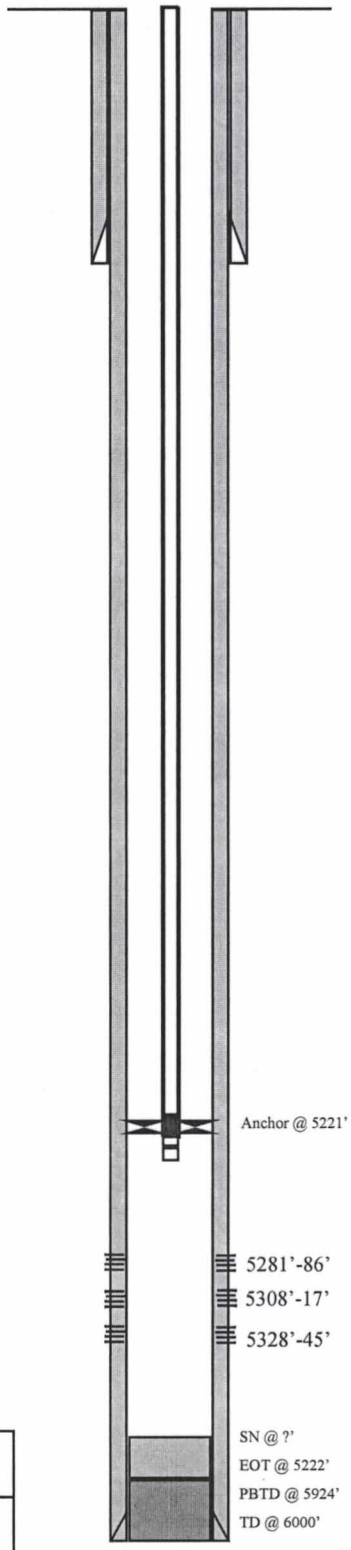


## FRAC JOB

| | | |
|---|---|---|
| 1-21-97 | 5281'-5345' | **27,000#20/40 sand, 66,900# 16/30 sand, and 27,678 gals fluid. Treated w/avg rate of 30.8 BPM w/ avg press of 1690 psi. ISIP-1920, 5 min 1940 psi.** |

## PERFORATION RECORD

| | | | |
|---|---|---|---|
| 1-18-97 | 5328'-5345' | 4 JSPF | 68 holes |
| 1-18-97 | 5308'-5317' | 4 JSPF | 36 holes |
| 1-18-97 | 5281'-5286' | 4 JSPF | 20 holes |

Inland Resources Inc.

**Monument Federal #13-4-9-16**

2050 FSL 660 FNL

NWSW Section 4-T9S-R16E

Duchesne Co, Utah

API #43-013-31716; Lease #U-73086

Attachment E-6

# Balcron Monument Federal #14-4

Spud Date: 8-11-96
Put on Production: 9-9-96
GL: 5766' KB: 5776'

Initial Production: 33 BOPD, 0 MCFD
0 BWPD

Wellbore Diagram

## SURFACE CASING

CSG SIZE: 8-5/8"
GRADE: J-55
WEIGHT: 24#
LENGTH: 6 JTS (253')
DEPTH LANDED: 263'
HOLE SIZE: 12-1/4"
CEMENT DATA: 160 sx Class "G"cmt

## PRODUCTION CASING

CSG SIZE: 5-1/2"
GRADE: J-55
WEIGHT: 15.5#
LENGTH: 135 jts (5831.81)
HOLE SIZE: 7-7/8"
CEMENT DATA: 270 sx Super G & 400 sx 50/50 Poz
CEMENT TOP AT: 1100' 1155
SET AT: 5841'

## TUBING

SIZE/GRADE/WT: 2-7/8", J-55, 6.5#
NO. OF JOINTS: 159 (4946.35')
TUBING ANCHOR: 2.80' @ 4953.35' KB
2 Jts. Tubing 63.08'
SN: @ 5022.23' KB
Perf Sub: 4.20'
1 jt Tubing 28.05'
N.C.: 0.40'
EOT: @ 5055.98' KB

## SUCKER RODS

POLISHED ROD: 1-1/4"x22'
SUCKER RODS: 1-6',1-4'x3/4" pony rods; 190-3/4" plain, 8 -3/4" scrapered, 1 - 2' x 1" scrapered pony, 1 - 1-1/2" weight rods, 1 - 2'x1" scrapered.
PUMP SIZE: 2-1/2"x1-3/4"x15' RHAC
STROKE LENGTH: 86"
PUMP SPEED, SPM: 4.5 SPM
LOGS: DLL/GR, LDT/CNL

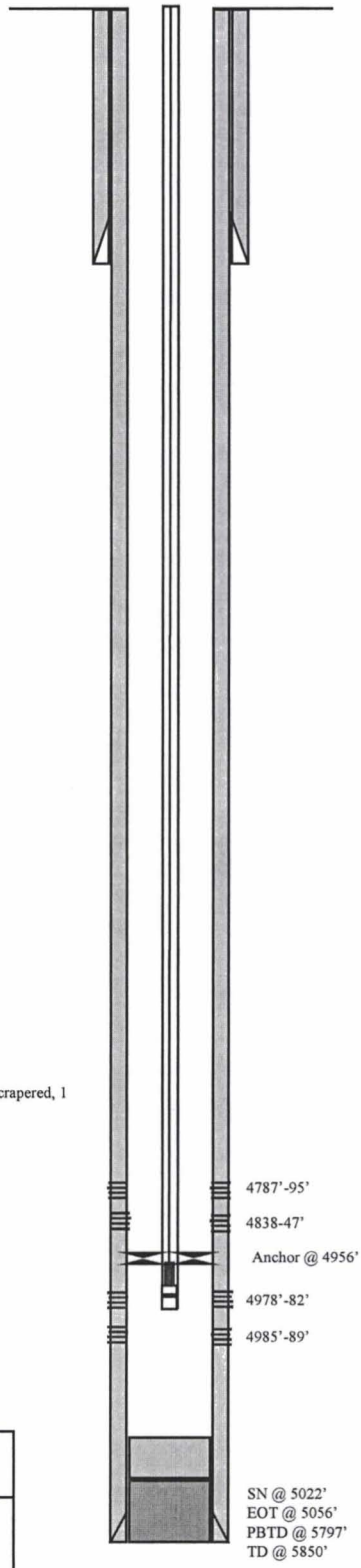


## FRAC JOB

| | | |
|---|---|---|
| 9-4-96 | 4978'-4989' | 48,100# 16/30 sand, and 17,388 gals fluid. |
| 9-6-96 | 4787'-4847' | 96,400# 16/30 sand, and 28,476 gals fluid. |

## PERFORATION RECORD

| | | | |
|---|---|---|---|
| 9-4-96 | 4985'-4989' | 4 JSPF | 16 holes |
| 9-4-96 | 4978'-4982' | 4 JSPF | 16 holes |
| 9-4-96 | 4838'-4847' | 2 JSPF | 18 holes |
| 9-4-96 | 4787'-4795' | 2 JSPF | 16 holes |

Inland Resources Inc.

**Balcron Monument Federal #14-4**

719 FSL 607 FWL

SWSW Section 4-T9S-R16E

Duchesne Co, Utah

API #43-013-31666; Lease #U-73086

Attachment E-7

# South Wells Draw #14A-4-9-16

Spud Date: 1/17/2000
Put on Production: 7/13/2000
GL: 5711' KB: 5721'

Initial Production: 75 BOPD, 90 MCFD, 4 BWPD

Wellbore Diagram

## SURFACE CASING

CSG SIZE: 8-5/8"

GRADE: J-55

WEIGHT: 24#

LENGTH: 7 jts. (305.07')

DEPTH LANDED: 316'

HOLE SIZE:12-1/4"

CEMENT DATA: 141 sxs Class "G" cmt, est 5 bbls cmt to surf

## PRODUCTION CASING

CSG SIZE: 5-1/2"

GRADE: J-55 & N-80

WEIGHT: 15.5# & 17.0#

LENGTH: 144 jts. (5861.96')

DEPTH LANDED: 5859.76'

HOLE SIZE: 7-7/8"

CEMENT DATA: 280 sk Prem. Lite II mixed & 400 sxs 50/50 POZ.

CEMENT TOP AT: Surface per CBL

4008

## TUBING

SIZE/GRADE/WT.: 2-7/8" / J-55 / 6.5#

NO. OF JOINTS: 182 jts (5658.64')

TUBING ANCHOR: 5544'

SEATING NIPPLE: 2-7/8" (1.10')

TOTAL STRING LENGTH: EOT @ 5705'

SN LANDED AT: 5578'

## SUCKER RODS

POLISHED ROD: 1-1/2" x 22' SM

SUCKER RODS: 4-1-1/2"x25' weight bars, 10 -3/4" guided rods, 118 - 3/4" slick rods, 90 - 3/4" guided rods, 1 -3/4"x6' pony rod.

PUMP SIZE: 2-1/2" x 1-1/2" RHAC

STROKE LENGTH: 74"

PUMP SPEED, SPM: 8 SPM

LOGS:Dual Laterlog, GR, SP, Spectral Density-Dual Spaced Neutron, CBL-GR

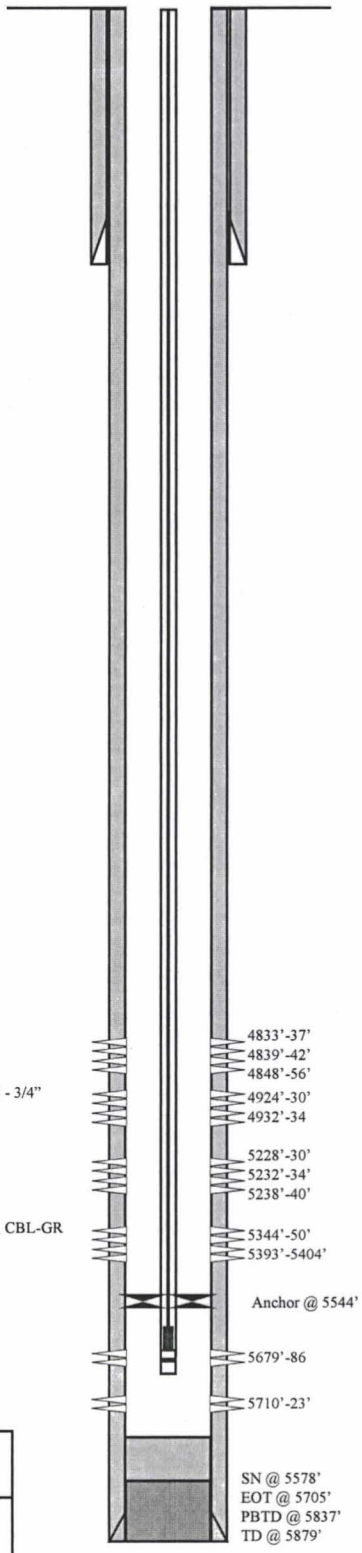


## FRAC JOB

2/15/00 5679'-5723' **Frac CP sand as follows:** 83,359# 20/40 sand in 487 bbls Viking I-25 fluid. Perfs broke down @ 3656 psi. Treated @ avg press of 1700 psi w/avg rate of 30 BPM. ISIP 2520 psi, 5 min 2392 psi.

2/15/00 5228'-5404' **Frac A/LDC sand as follows:** 101,132# 20/40 sand in 578 bbls Viking I-25 fluid. Perfs broke down @ 3480 psi. Treated @ avg press of 2100 psi w/avg rate of 34 BPM. Had several small breaks & a large pressure break when bringing pumps up to rate. With approx 40 bbls left to flush, pressure was near maximum. Rate was decreased 25 BPM, then pressure dropped off approx 2000 psi & a full flush was achieved. ISIP 2380 psi, 5 min 2170 psi

2/15/00 4833'-4934' **Frac C/D sand as follows:** 64,257# 20/40 sand in 332 bbls Viking I-25 fluid. Perfs broke down @ 2620 psi. Treated @ avg press of 2000 psi w/avg rate of 34 BPM. With 7# sand on perfs, pressure increased rapidly. Rate was increased & sand cut @ blender @ 8-1/2# but maximum pressure was reached before any flush water was pumped. Screened out with approx 38,257# sand in perfs and 25,000# sand left in csg.

## PERFORATION RECORD

| | | | |
|---|---|---|---|
| 2/15/00 | 5710'-5123' | 4 JSPF | 52 holes |
| 2/15/00 | 5679'-5686' | 4 JSPF | 28 holes |
| 2/15/00 | 5393'-5404' | 4 JSPF | 44 holes |
| 2/15/00 | 5344'-5350' | 4 JSPF | 24 holes |
| 2/15/00 | 5238'-5240' | 4 JSPF | 8 holes |
| 2/15/00 | 5228'-5230' | 4 JSPF | 8 holes |
| 2/15/00 | 5232'-5234' | 4 JSPF | 8 holes |
| 2/16/00 | 4932'-4934' | 4 JSPF | 8 holes |
| 2/16/00 | 4924'-4930' | 4 JSPF | 24 holes |
| 2/16/00 | 4848'-4856' | 4 JSPF | 32 holes |
| 2/16/00 | 4833'-4837' | 4 JSPF | 16 holes |
| 2/16/00 | 4839'-4842' | 4 JSPF | 12 holes |

Inland Resources Inc.

**South Wells Draw #14A-4-9-16**

731 FSL 2030 FWL

SESW Section 4-T9S-R16E

Duchesne Co, Utah

API #43-013-32107; Lease #UTU-64379

Attachment E-8

# South Wells Draw #15-4-9-16

Spud Date: 1/25/2000
Put on Injection: --/--/----
GL: 5725' KB: 5735'

Wellbore Diagram

SURFACE CASING

CSG SIZE: 8-5/8"
GRADE: J-55
WEIGHT: 24#
LENGTH: 7 jts. (319.75')
DEPTH LANDED: 317.35'
HOLE SIZE:12-1/4"
CEMENT DATA: 141 sxs Class "G" cmt.

PRODUCTION CASING

CSG SIZE: 4-1/2"
GRADE: J-55
WEIGHT: 11.6#
LENGTH: 132 jts. (5921.85')
DEPTH LANDED: 5919.45'
HOLE SIZE: 7-7/8"
CEMENT DATA: 350 sk Prem. Lite II mixed & 550 sxs 50/50 POZ.
CEMENT TOP AT: Surface per CBL

420

TUBING

SUCKER RODS

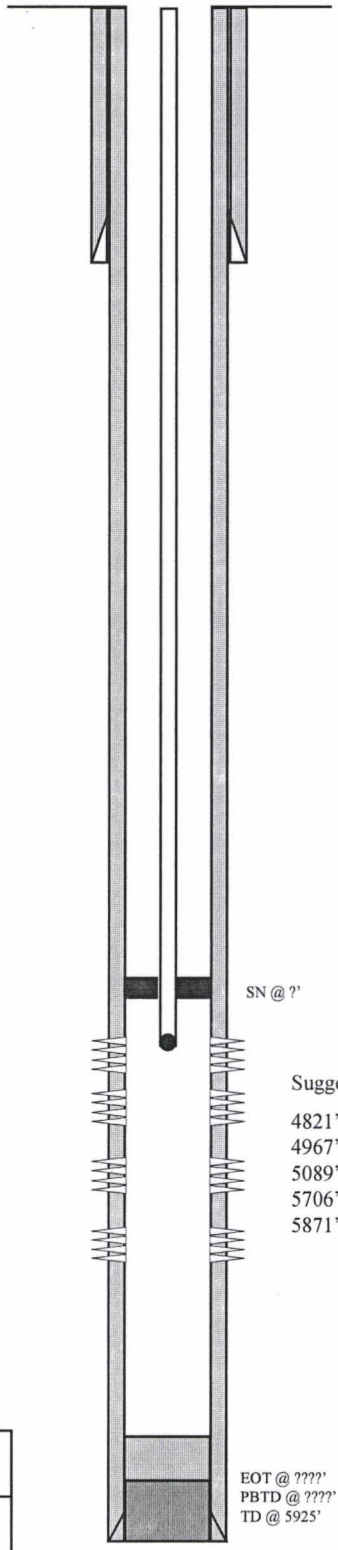


FRAC JOB

Waiting on conversion to injection.

**Well has not been completed yet.**

Suggested perfs:

4821'-4825'
4967'-4971'
5089'-5096'
5706'-5709'
5871'-5874'

Inland Resources Inc.

**South Wells Draw #15-4-9-16**

709 FSL 1877 FEL

SWSE Section 4-T9S-R16E

Duchesne Co, Utah

API #43-013-32108; Lease #UTU-77338

Attachment E-9

# Federal #21-4G

Spud Date: 6-2-90
Put on Injection: 1-11-95
GL: 5715' KB: 5730'

Initial Production: 349 BOPD, 0 MCFD
57 BWPD

Injection Diagram

## SURFACE CASING

CSG SIZE: 8-5/8"
GRADE: K-55
WEIGHT: 24#
LENGTH: 7 JTS
DEPTH LANDED: 305'
HOLE SIZE: 12-1/4"
CEMENT DATA: 210 sx Class "G"cmt

## PRODUCTION CASING

CSG SIZE: 5-1/2"
GRADE: J-55
WEIGHT: 17#
LENGTH: ? jts
HOLE SIZE: 7-7/8"
CEMENT DATA: 145 sx Hi-Lift & 530 sx 10-0 RFC
CEMENT TOP AT: 1150' 2989
SET AT: 6339'

## TUBING

SIZE/GRADE/WT: 2-7/8", J-55, 6.5#
NO. OF JOINTS: 197 jts
TUBING ANCHOR: 4877'
SEATING NIPPLE: 2-7/8"
TOTAL STRING LENGTH: ?
SN LANDED AT: 6090'

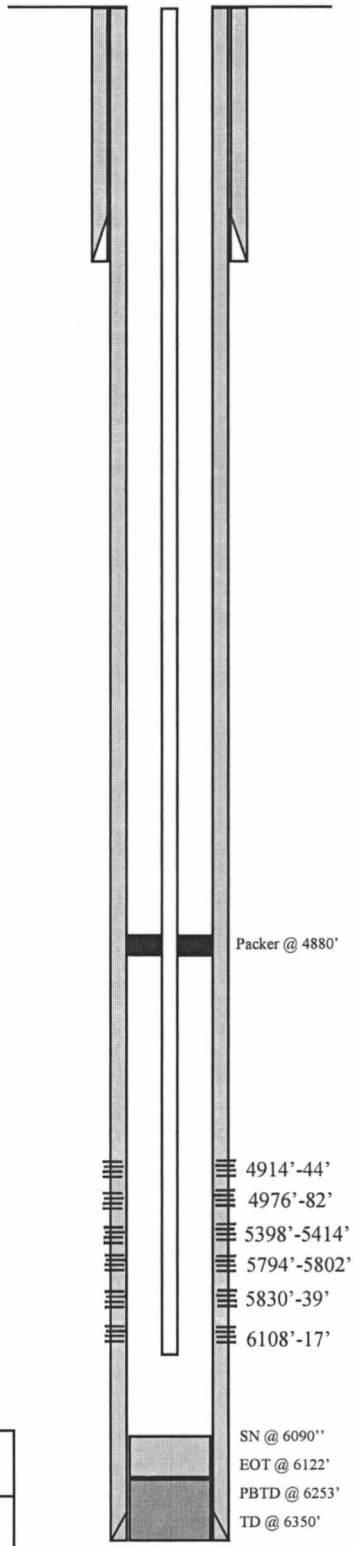


## FRAC JOB

| | | |
|---|---|---|
| **8-10-90** | **6108'-6117'** | **40,720# 20/40 sand, 542 bbls. Avg press of 2200 psi w/avg rate of 25 BPM. ISIP-2100 psi, 15 min 1880 psi.** |
| **8-12-90** | **5794'-5839'** | **32,020# 20/40 sand, 42,265# 16/30 sand, and 849 bbls. ISIP-2030 psi, 5 min 1850 psi.** |
| **8-14-90** | **5398'-5414'** | **37,400# 20/40 sand, 49,300# 16/30 sand, and 885 bbls. Avg TP 2550 psi w/avg rate of 35 BPM. ISIP-2000 psi, 15 min 1650 psi.** |
| **8-17-90** | **4914'-4982'** | **60,800# 20/40 sand, 80,100# 16/30 sand, and 1303 bbls. Avg TP 2400 psi w/avg press of rate of 50 BPM.** |

## PERFORATION RECORD

| | | | |
|---|---|---|---|
| 8-9-90 | 6108'-6117' | 4 JSPF | 36 holes |
| 8-11-90 | 5794'-5802' | 4 JSPF | 32 holes |
| 8-11-90 | 5830'-5839' | 4 JSPF | 36 holes |
| 8-13-90 | 5398'-5414' | 4 JSPF | 64 holes |
| 8-15-90 | 4914'-4944' | 4 JSPF | 120 holes |
| 8-15-90 | 4976'-4982' | 4 JSPF | 24 holes |

Inland Resources Inc.

**Federal #21-4G**

1958 FWL 760 FNL

NENW Section 4-T9S-R16E

Duchesne Co, Utah

API #43-013-31272; Lease #U-30096

Attachment E-10

# Castle Peak Federal #43-5

Spud Date: 1/2/84
Put on Injection: 7/3/98
GL: 5786' KB: 5796'

Initial Production: 45 BOPD, 14 MCFD
20 BWPD

Injection Diagram

## SURFACE CASING

CSG SIZE: 8-5/8"
GRADE: ?
WEIGHT: ?
LENGTH: ? JTS
DEPTH LANDED: 240'
HOLE SIZE: 12-1/4"
CEMENT DATA: 190 skx Class "G"cmt, est ? bbls to surface

## PRODUCTION CASING

CSG SIZE: 5-1/2"
GRADE: ?
WEIGHT: ?
LENGTH: ? jts
HOLE SIZE: 7-7/8"
CEMENT DATA: 195 sks Lite & 385 sks thixotropic
CEMENT TOP AT: 750'
SET AT: 6025' 2365

## TUBING

SIZE/GRADE/WT: 2-3/8", J-55, 6.5#
NO. OF JOINTS: 137
TUBING ANCHOR: N/A'
SEATING NIPPLE: 2-3/8"
TOTAL STRING LENGTH: ?'
SN LANDED AT: 4268'

## SUCKER RODS

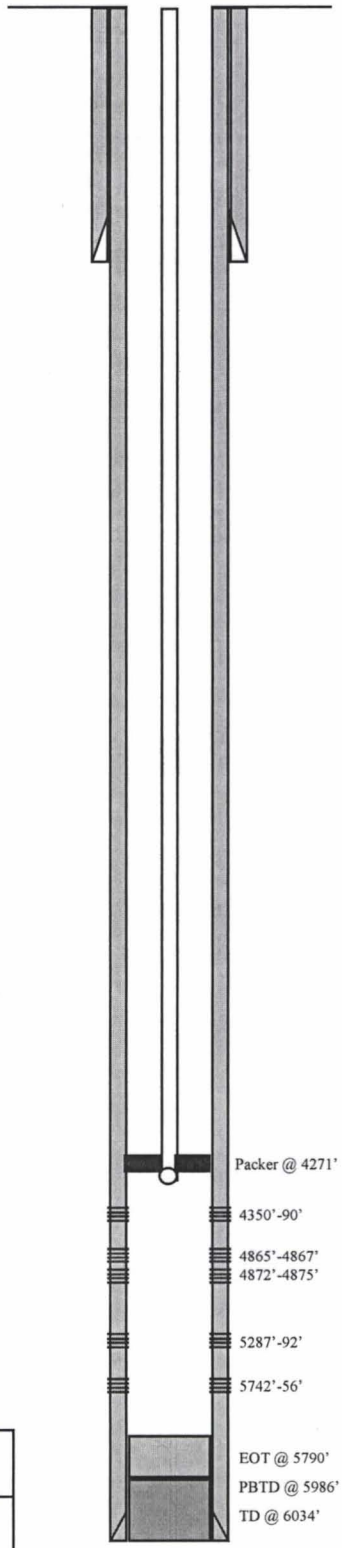


## FRAC JOB

| | | |
|---|---|---|
| **2-11-84** | **5742'-5756'** | 44,010 gals YF4G, containing 1000# inverta frac sd, 2000# diverta frac sd, 44,000# 20/40 sd & 16,992# 10/20 sd. Screened out. Avg rate of 11 BPM @ 1900 psi. |
| **3-8-84** | **5287'-5297'** | 38,396 gals YF4G containing 1002 # diverta frac sd., 2005 # inverta frac sd, 38,000# 20/40 sd & 10,000# 10/20 sd. Avg rate of 12 BPM @ 2650 psi. ISIP-2700 psi, 15 min 2200 psi. |
| **3-29-84** | **4350'-4390'** | 68,352 gals YF4G containing 85,500# 20/40 sd & 3360# 10/20 sd. Screened out. Avg rate of 20 BPM @ 1900 psi. ISIP-2000 psi, 20 min 1175 psi. |
| **3-20-85** | **4865'-4875'** | KCl water @ 5500 psi spotted 500 gallons 15% acid & brokedown new zone @ 2800 psi./4 bpm to 1900 psi/ 7-1/2 bpm, balled off, surged balls off perfs, released pkr & ran by perfs, pulled up reseat packer @ 4450, fraced well w/ Nowsco, total fluid 40,000 gals Beta II 35 gals containing 77,000# 20/40 sand, max sand cond = 5 ppg, Air = 17 bpm, Aip = 3000 psi, ISIP = 2200 psi, 15 min SIP = 1640 psi, 30 min SIP = 1460 psi, SIFN, this AM SITP = 500 psi. |

## PERFORATION RECORD

| | | | |
|---|---|---|---|
| 2-11-84 | 5742'-5756' | 2 JSPF | 28 holes |
| 3-7-84 | 5287'-5292' | 2 JSPF | 20 holes |
| 3-28-84 | 4350'-4390' | 2 JSPF | 80 holes |
| 3-20-85 | 4865'-4867' | 4 JSPF | 8 holes |
| 3-20-85 | 4872'-4875' | 4 JSPF | 12 holes |

Inland Resources Inc.

**Castle Peak Federal #43-5**

1989 FSL 570 FEL

NESE Section 5-T9S-R16E

Duchesne Co, Utah

API #43-013-30858; Lease #U-034217A

Attachment E-11

# Balcron Federal #21-9Y

Spud Date: 8/23/93
Put on Production: 9/30/93
GL: 5747' KB: 5753'

Initial Production: 50 BOPD, 75 MCFD
20 BWPD

Proposed Injection
Wellbore Diagram

## SURFACE CASING

CSG SIZE: 8-5/8"

GRADE: J-55

WEIGHT: 24#

LENGTH: 6 JTS - 266.25'

DEPTH LANDED: 275' KB

HOLE SIZE: 12-1/4"

CEMENT DATA: 150 sx Class "G"cmt w/2% CaCl & 1/4#/sx cello flakes

## PRODUCTION CASING

CSG SIZE: 5-1/2"

GRADE: J-55

WEIGHT: 15.5#

LENGTH: 6154.48'

HOLE SIZE: 7-7/8"

CEMENT DATA: 188 sx "G" w/4% thrifty lite. Tail w/125 sx 50/50 POZ.

CEMENT TOP AT: 2946' KB

SET AT: 6162.48' KB

## TUBING

SIZE/GRADE/WT: 2-7/8", J-55, 6.5#

NO. OF JOINTS: 153 (4733.84')

TUBING ANCHOR: 2-7/8" x 5-1/2" x 2.75' Trico

SEATING NIPPLE: 2-7/8" x 1.10'

TOTAL STRING LENGTH: 5393.47'

SN LANDED AT: 5370.37' KB

## FRAC JOB

**9/13/93 5349'-5359'**

**Acid job/Breakdown:**

ATP = 2500 psi, ATR = 3.8 bpm, ISIP = 2200 psi.

**Frac sand as follows:**
42,329# 16/30 sand w/402 bbls gelled KCL wtr. ISIP = 2582 psi, 5 min = 2280 psi, 10 min = 2032 psi, 15 min = 1826 psi.

**9/17/93 4780'-4796'**

**Acid job/Breakdown:**

Balled out. ATP = 2500 psi, ATR = 8 bpm.

**Frac sand as follows:**
20,000# 16/30 sand w/443 bbls gelled KCL wtr. ATP = 2000 psi, ATR = 20 bpm, ISIP = 1760 psi, 15 min = 1500 psi.

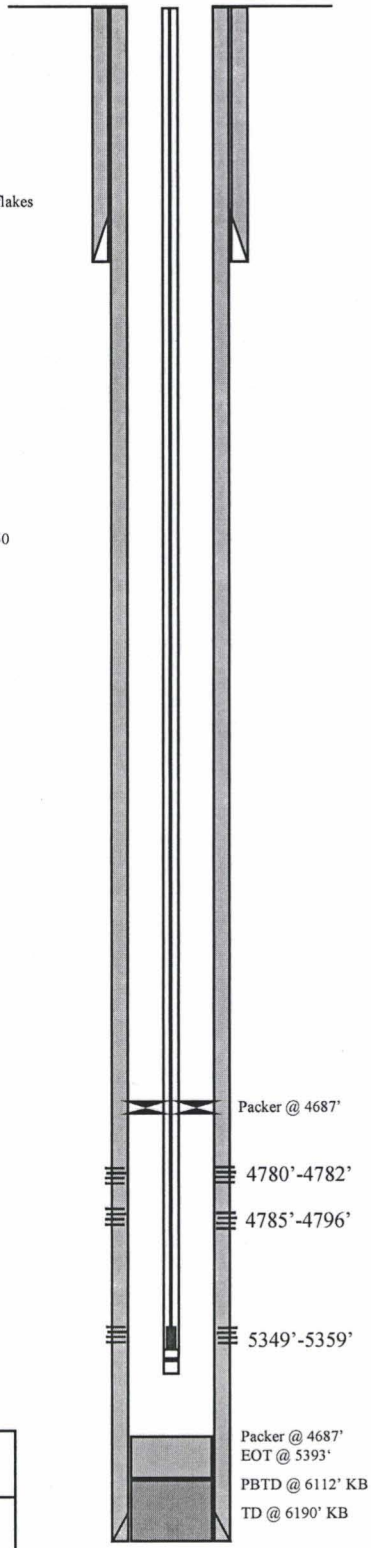


## PERFORATION RECORD

| | | | |
|---|---|---|---|
| 9-9-93 | 5349'-5359' | 2 JSPF | 20 holes |
| 9-16-93 | 4780'-4782' | 2 JSPF | 4 holes |
| 9-16-93 | 4785'-4796' | 2 JSPF | 22 holes |

Inland Resources Inc.

**Balcron Federal #21-9Y**

476 FNL 2051 FWL

NENW Section 9-T9S-R16E

Duchesne Co, Utah

API #43-013-31396; Lease #U-65207

Attachment F
Page 1 of 2

# UNICHEM

A Division of BJ Services

P.O. Box 217
Roosevelt, Utah 84066

Office (435) 722-5066
Fax (435) 722-5727

## WATER ANALYSIS REPORT

Company INLAND PRODUCTION Address _____ Date 2/27/01

Source South Wells Draw 11-4-9-16 Date Sampled 2/26/01 Analysis No. _____

| | Analysis | | mg/l(ppm) | | *Meq/l | |
|---|---|---|---|---|---|---|
| 1. PH | 9.2 | | | | | |
| 2. $H_2S$ (Qualitative) | 0.0 | | | | | |
| 3. Specific Gravity | 1.020 | | | | | |
| 4. Dissolved Solids | | | 20,397 | | | |
| 5. Alkalinity ($CaCO_3$) | | $CO_3$ | 0 | ÷ 30 | 0 | $CO_3$ |
| 6. Bicarbonate ($HCO_3$) | | $HCO_3$ | 854 | ÷ 61 | 14 | $HCO_3$ |
| 7. Hydroxyl (OH) | | OH | 0 | ÷ 17 | 0 | OH |
| 8. Chlorides (Cl) | | Cl | 11,680 | ÷ 35.5 | 329 | Cl |
| 9. Sulfates ($SO_4$) | | $SO_4$ | 0 | ÷ 48 | 0 | $SO_4$ |
| 10. Calcium (Ca) | | Ca | 56 | ÷ 20 | 3 | Ca |
| 11. Magnesium (Mg) | | MG | 10 | ÷ 12.2 | 1 | Mg |
| 12. Total Hardness ($CaCO_3$) | | | 180 | | | |
| 13. Total Iron (Fe) | | | 19.0 | | | |
| 14. Manganese | | | | | | |
| 15. Phosphate Residuals | | | | | | |

*Milli equivalents per liter

### PROBABLE MINERAL COMPOSITION

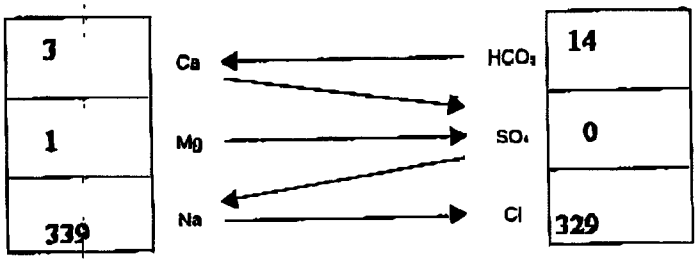


| Compound | Equiv. Wt. | X | Meq/l | = | Mg/l |
|---|---|---|---|---|---|
| $Ca(HCO_3)_2$ | 81.04 | | 3 | | 243 |
| $CaSO_4$ | 68.07 | | | | |
| $CaCl_2$ | 55.50 | | | | |
| $Mg(HCO_3)_2$ | 73.17 | | 1 | | 73 |
| $MgSO_4$ | 60.19 | | | | |
| $MgCl_2$ | 47.62 | | | | |
| $NaHCO_3$ | 84.00 | | 10 | | 840 |
| $Na_2SO_4$ | 71.03 | | | | |
| NaCl | 58.46 | | 329 | | 19,233 |

| Saturation Values | Distilled Water 20°C |
|---|---|
| $CaCO_3$ | 13 Mg/l |
| $CaSO_4 \cdot 2H_2O$ | 2,090 Mg/l |
| $MgCO_3$ | 103 Mg/l |

REMARKS _____

Attachment F
Page 2 of 2

# AQUAMIX SCALING PREDICTIONS

COMPANY: INLAND PRODUCTION CO 2-28-2001
LOCATION:
SYSTEM:

| WATER DESCRIPTION: | JOHNSON WATER | SO WELLS DRAW 11-4-9-16 |
|---|---|---|
| P-ALK AS PPM CaCO3 | 0 | 0 |
| M-ALK AS PPM CaCO3 | 393 | 1401 |
| SULFATE AS PPM SO4 | 130 | 0 |
| CHLORIDE AS PPM Cl | 71 | 11680 |
| HARDNESS AS PPM CaCO3 | 0 | 0 |
| CALCIUM AS PPM CaCO3 | 180 | 140 |
| MAGNESIUM AS PPM CaCO3 | 169 | 41 |
| SODIUM AS PPM Na | 46 | 7797 |
| BARIUM AS PPM Ba | 0 | 0 |
| STRONTIUM AS PPM Sr | 0 | 0 |
| CONDUCTIVITY | 0 | 0 |
| TOTAL DISSOLVED SOLIDS | 600 | 20397 |
| TEMP (DEG-F) | 100 | 100 |
| SYSTEM pH | 7.4 | 9.2 |

WATER COMPATIBILITY CALCULATIONS
JOHNSON WATER AND SO WELLS DRAW 11-
CONDITIONS: pH=8.3. TEMPERATURE ESTIMATED FROM COMPONENT WATERS.

WATER ONE IS JOHNSON WATER

| % Water 1 | STIFF DAVIS CaCO3 INDEX | lbs/1000 BBL EXCESS CaCO3 | mg/l BaSO4 IN EXCESS OF SATURATION | mg/l SrO4 IN EXCESS OF SATURATION | mg/l Gypsum IN EXCESS OF SATURATION |
|---|---|---|---|---|---|
| 100 | 1.23 | 56 | 0 | 0 | 0 |
| 90 | 1.21 | 56 | 0 | 0 | 0 |
| 80 | 1.18 | 54 | 0 | 0 | 0 |
| 70 | 1.13 | 53 | 0 | 0 | 0 |
| 60 | 1.07 | 51 | 0 | 0 | 0 |
| 50 | 1.01 | 49 | 0 | 0 | 0 |
| 40 | .95 | 47 | 0 | 0 | 0 |
| 30 | .94 | 46 | 0 | 0 | 0 |
| 20 | .91 | 44 | 0 | 0 | 0 |
| 10 | .89 | 43 | 0 | 0 | 0 |
| 0 | .86 | 41 | 0 | 0 | 0 |

Attachment "G"

# South Wells Draw Federal #11-4-9-16
# Proposed Maximum Injection Pressure

| Frac Interval (feet) Top | Bottom | Avg. Depth (feet) | ISIP (psi) | Calculated Frac Gradient (psi/ft) | Pmax |
|---|---|---|---|---|---|
| 4803 | 4914 | 4859 | 3550 | 1.164 | 3499 |
| 5408 | 5425 | 5417 | 3350 | 1.051 | 3333 |
| 5742 | 5890 | 5816 | 2400 | 0.846 | 2357 |
| | | | | Minimum | 2357 |

Calculation of Maximum Surface Injection Pressure
Pmax = (Frac Grad -(0.433*1.005)) x Depth of Top Perf
where pressure gradient for the fresh water is .433 psi/ft and
specific gravity of the injected water is 1.005.

Frac Gradient = (ISIP +(0.433*Avg. Depth))/Avg. Depth

Inland RESOURCES INC.

# Daily Completion Report

**SOUTH WELLS DRAW 11-4-9-16**
NE/SW Section 4, T09S R16E
DUCHESNE Co., Utah
API # 43-013-32104

Spud Date: 10/21/98
MIRU Drl Rig: 10/21/98, Union #14
TD: 6000'
Completion Rig: CWS #52

**11/10/98** **PO: Perf CP sd. (Day 1)**
Summary: 11/9/98 – TP: 0, CP: 0. MIRU Colorado Well Service Co. #52. NU BOP's. PU & Tally in hole w/4-3/4 bit, 5-1/2 csg scraper, 202 Jts 2-7/8" 8rd 6.5# J-55 tbg. Tag PBTD @ 6003'. Press test csg & BOP's to 3,000 psi. TOH w/tbg. SIFN.
DC: $25,540 TWC: $171,465

**11/11/98** **SD for day.**

**11/12/98** **PO: Swab well down. Frac CP sds. (Day 2)**
Summary: 11/11/98 – CP: 0. RU Schlumberger & **perf CP sds @ 5742-49' & 5873-90' w/4 jspf**. TIH w/5-1/2" RTTS pkr & tbg. Set pkr @ 5811'. Break down perfs 5873-90' @ 2200 psi. Inject 1 BW @ 1.5 BPM @ 1400 psi. Break down perfs 5742-49' @ 1900 psi. Inject 1 BW @ 2 BPM @ 1600 psi. Release pkr. Pull EOT to 5693'. SIFN.
DC: $3,227 TWC: $174,692

**11/13/98** **PO: Perf A sds. (Day 3)**
Summary: 11/12/98 – TP: 0, CP: 0. IFL @ sfc. Swab FL dn to 5300'. FL maintained 5300'. FOC @ 2%. TOH w/tbg. LD pkr. NU isolation tool. RU BJ Services & frac CP sds w/120,312# 20/40 sd in 603 bbls Viking I-25 fluid. Perfs broke back @ 3263 psi @ 18.5 BPM. Treated @ ave press of 1650 psi w/ave rate of 35 BPM. ISIP: 2400 psi, 5 min: 2175 psi. Flowback on 12/64 choke for 4-1/2 hrs & died. Rec 185 BTF (est 31% of load). SIFN w/est 418 BWTR.
DC: $22,770 TWC: $197,462

**11/14/98** **PO: Frac A sds. (Day 4)**
Summary: 11/13/98 – CP: 0. TIH w/5-1/2 RBP & tbg. Set plug @ 5510'. Press test plug to 3000 psi. Circ hole clean. Swab FL dn to 4900'. Rec 106 BTF. TOH w/tbg & RH. RU Schlumberger and **perf A sds @ 5408-5411' & 5419-5425'**. TIH w/tbg to 5460'. IFL @ 4900'. Made 4 swb runs, rec 18 BTF. FFL @ 5200' w/5% oil cut. SIFN w/est 294 BWTR.
DC: $3,463 TWC: $200,925

**11/15/98** **PO: Perf D/YDC sds. (Day 5)**
Summary: 11/14/98 – TP: 0, CP: 0. IFL @ 5000'. Made 3 swab runs, rec 6 BTF w/50% oil cut. FFL maintaining 5100'. TOH w/tbg. NU isolation tool. RU BJ Services & frac A sds w/84,000# of 20/40 sd in 451 bbls Viking I-25 fluid. Perfs broke dn @ 2005 psi. Treated @ ave press of 2500 psi w/ave rate of 33 BPM w/sd on perfs pressure increased steadily. Rate was increased to 35 BPM and sand was cut @ blender @ 9#. Screened out w/8.6# sd on perfs w/1332 gal left to flush. Est 74,200# sd in perfs, 8,300# sd left in csg. ISIP: 3350 psi, 5 min: 2450 psi. Flowback on 12/64 choke for 3-1/2 hrs & died. Rec 120 BTF (est 27% of load). SIFN w/est 619 BWTR.
DC: $19,421 TWC: $220,346

**11/16/98** **SD for Sunday.**

Inland RESOURCES INC.

**Daily Completion Report – Page Two**

**SOUTH WELLS DRAW 11-4-9-16**
NE/SW Section 4, T09S R16E
DUCHESNE Co., Utah
API # 43-013-32104

Spud Date: 10/21/98
MIRU Drl Rig: 10/21/98, Union #14
TD: 6000'
Completion Rig: CWS #52

**11/17/98** **PO: Frac D/YDC sds. (Day 6)**
Summary: 11/16/98 – CP: 0. TIH w/RH & tbg. Tag sd @ 4566'. C/O sd to RBP @ 5510'. Release plug. Pull up & reset @ 5020'. Press test plug to 3000 psi. Swab FL dn to 4300'. Rec 93 BTF. TOH w/tbg. RU Schlumberger and **perf D/YDC sds @ 4803-4808', 4855-4858', 4862-4868' & 4906-4914' w/4 jspf**. TIH w/tbg to 4986'. SIFN w/est 526 BWTR.
DC: $4,634 TWC: $224,980

**11/18/98** **PO: Pull plug. CO PBTD. Swab. (Day 7)**
Summary: 11/17/98 – CP: 0. IFL @ 3500'. Made 5 swb runs, rec 18 BTF w/tr oil. FFL @ 4000' last 3 runs. TOH w/tbg. NU isolation tool. RU BJ Services and frac D/YDC sds w/92,438# 20/40 sd in 518 bbls Viking I-25 fluid. Perfs broke dn @ 3371 psi. Treated @ ave press of 3000 psi w/ave rate of 34 BPM. With sd on perfs pressure increased steadily. Rate was increased to 37 BPM & sd was cut @ blender @ 8.7#. A full flush was achieved. ISIP - 3550 psi, 5 min - 3371 psi. Flowback on 12/64 choke for 1 hour & died. Rec 30 BTF (est 6% of load). SIFN w/est 996 BWTR.
DC: $20,996 TWC: $245,976

**11/19/98** **PO: Swab well. Trip production tbg. (Day 8)**
Summary: 11/18/98 – CP: 0. TIH w/RH & tbg. Tag sd @ 4684'. C/O sd to RBP @ 5020'. Release plug. TOH w/tbg. LD plug. TIH w/RH & tbg. Tag sd @ 5766'. C/O sd to PBTD @ 6003'. Circ hole clean. Pull EOT to 5885'. IFL @ sfc. Made 14 swb runs, rec 144 BTF w/tr sd & tr oil. FFL @ 1500'. SIFN w/est 852 BWTR.
DC: $2,469 TWC: $248,445

**11/20/98** **PO: Swab well to clean up sd. (Day 9)**
Summary: 11/19/98 – TP: 0, CP: 0. IFL @ 400'. Made 26 swab runs, rec 260 BTF (est 200 BW & 60 BO) w/lg tr sd all day. Good gas blow after each run. FFL @ 3500'. FOC @ 80%. SIFN w/est 652 BWTR.
DC: $3,053 TWC: $251,498

**11/21/98** **PO: PU rods. Place well on production. (Day 10)**
Summary: 11/20/98 – TP: 70, CP: 100. Bleed gas off well. IFL @ 1500'. Made 9 swb runs, rec 70 BTF (est 40 BO, 30 BW) w/no sd & good gas. FOC @ 80%. FFL @ 2500'. Fill hole & circ out oil & gas. Lost est 140 BW, rec 80 BO. TIH w/tbg. Tag sd @ 5893'. C/O sd to PBTD @ 6003'. Circ hole clean. TOH w/tbg. TIH w/production tbg as follows: 2-7/8 NC, 1 jt tbg, SN, 6 jts tbg, 5-1/2 TA, 192 jts 2-7/8 8rd 6.5# J-55 tbg. ND BOP. Set TA @ 5702' w/SN @ 5883' & EOT @ 5915'. Land tbg w/14,000# tension. NU wellhead.SIFN w/est 762 BWTR.
DC: $2,334 TWC: $253,832

## ATTACHMENT H

## WORK PROCEDURE FOR PLUGGING AND ABANDONMENT

| | | |
|---|---|---|
| 1. | Plug #1 | Set 298' plug from 5642'-5940' with 40 sx Class "G" cement. |
| 2. | Plug #2 | Set 772' plug from 4703'-5475' with 95 sx Class "G" cement. |
| 3. | Plug #3 | Set 200' plug from 2000'-2200' with 30 sx Class "G" cement. |
| 4. | Plug #4 | Set 100' plug from 276'-376' (50' on either side of casing shoe) with 15 sx Class "G" cement. |
| 5. | Plug #5 | Set 50' plug from surface with 10 sx Class "G" cement. |
| 6. | Plug #6 | Pump 10 sx Class "G" cement down the 8-5/8" x 5-1/2" annulus to cement 326' to surface. |

The approximate cost to plug and abandon this well is $18,000.

Attachment H-1

# South Wells Draw Fed #11-4-9-16

Spud Date: 10/21/98
Put on Production: 11/21/98
GL: 5734' KB: 5744'

Proposed P & A
Wellbore Diagram

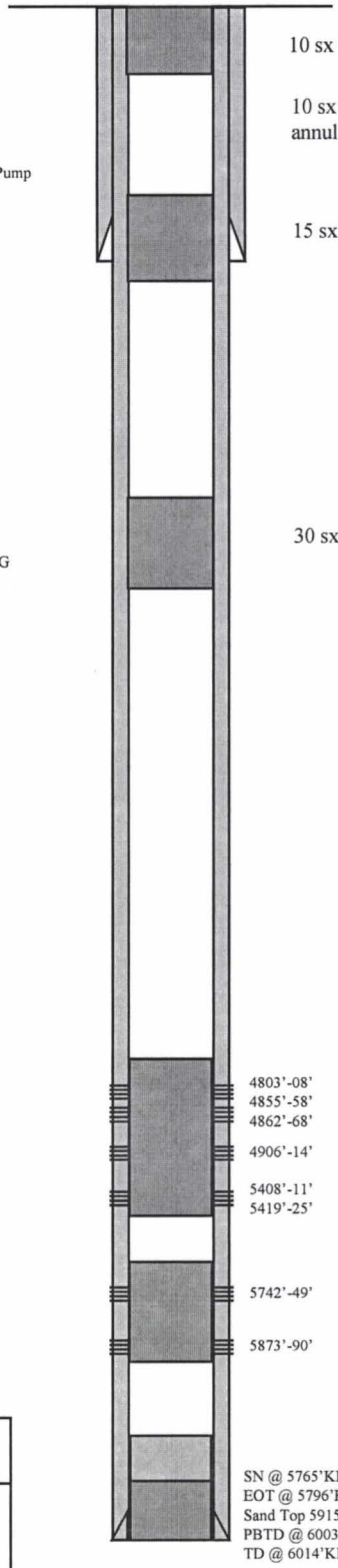


10 sx Class "G" cmt, 50' to surface

10 sx Class "G" cmt down the 8-5/8" x 5-1/2" annulus to cement 326' to surface

15 sx Class 'G" cmt, 276'-376'

30 sx Class "G" cmt, 2000'-2200'

95 sx Class "G" cmt, 4703'-5475'

40 sx Class "G" cmt, 5642'-5940'

## SURFACE CASING

CSG SIZE: 8-5/8"
GRADE: J-55
WEIGHT:24#
DEPTH LANDED: 326'
HOLE SIZE:12-1/4"
CEMENT DATA: 140 sxs Premium cmt, est 6 bbls to surf. Cmt fell. Pump 6 bbl "G" cmt down 1" string. Est. 2 bbl to surface

## PRODUCTION CASING

CSG SIZE: 5-1/2"
GRADE: J-55
WEIGHT: 15.5#
LENGTH: 137 jts. (6005')
SET AT: 6014' KB
HOLE SIZE: 7-7/8"
CEMENT DATA: 295 sxs Premium modified mixed & 310 sxs class G
CEMENT TOP AT: 484' per cement bond log(Schlumberger)

## TUBING

SIZE/GRADE/WT.: 2-7/8" / J-55 / 6.5#
NO. OF JOINTS: 195 jts
TUBING ANCHOR: 5584'
SEATING NIPPLE: 2-7/8"
TOTAL STRING LENGTH: EOT @ 5796'KB
SN LANDED AT: 5765'KB

Inland Resources Inc.

**South Wells Draw #11-4-9-16**

2067 FSL 1990 FWL

NESW Section 4-T9S-R16E

Duchesne Co, Utah

API #43-013-32104; Lease #UTU-77338

STATE OF UTAH
DEPARTMENT OF NATURAL RESOURCES
DIVISION OF OIL, GAS, AND MINING

**SUNDRY NOTICES AND REPORTS ON WELLS**

Do not use this form for proposals to drill or deepen or reentry to a different reservoir.
Use "APPLICATION FOR PERMIT -" for such proposals

*SUBMIT IN TRIPLICATE*

5. Lease Designation and Serial No.: UTU-77338
6. If Indian, Allottee or Tribe Name: NA
7. If unit or CA, Agreement Designation:
8. Well Name and No.: S. Wells Draw Fed #11-4
9. API Well No.: 43-013-32104
10. Field and Pool, or Exploratory Area: Monument Butte
11. County or Parish, State: Duchesne County, UT

1. Type of Well: [X] Oil Well [ ] Gas well [ ] Other
2. Name of Operator: **INLAND PRODUCTION COMPANY**
3. Address and Telephone No.: **410 Seventeenth Street, Suite 700 Denver, CO 80202 (303) 893-0102**
4. Location of Well (Footage, Sec., T., R., M., or Survey Description): NE/SW 2067' FSL, 1990' FWL Sec. 4, T9S, R16E

12 CHECK APPROPRIATE BOX(s) TO INDICATE NATURE OF NOTICE, REPORT, OR OTHER DATA

| TYPE OF SUBMISSION | TYPE OF ACTION | |
|---|---|---|
| [X] Notice of Intent | [ ] Abandonment | [ ] Change of Plans |
| | [ ] Recompletion | [ ] New Construction |
| [ ] Subsequent Report | [ ] Plugging Back | [ ] Non-Routine Fracturing |
| | [ ] Casing repair | [ ] Water Shut-off |
| [ ] Final Abandonment Notice | [ ] Altering Casing | [X] Conversion to Injection |
| | [ ] Other _____ | [ ] Dispose Water (Note: Report results of multiple completion on Well Completion or Recompletion Report and Log form.) |

13. Describe Proposed or Completed Operations (Clearly state all pertinent details, and give pertinent dates, including estimated date of starting any proposed work. If well is directionally drilled, give subsurface locations and measured and true vertical depths for all markers and zones pertinent to this work)

Please see attached injection application.

RECEIVED
MAR 08 2001
DIVISION OF
OIL, GAS AND MINING

14. I hereby certify that the foregoing is true and correct
Signed Joyce I. McGough Title **Regulatory Specialist** Date 2/28/01
**Joyce I. McGough**

(This space of Federal or State office use.)

Approved by _____ Title _____ Date _____
Conditions of approval, if any:

Title 18 U.S.C. Section 1001, makes it a crime for any person knowingly to make to any department of the United States any false, fictitious or fraudulent statements or representations as to any matter within its jurisdiction.

DIVISION OF OIL, GAS AND MINING
UNDERGROUND INJECTION CONTROL PROGRAM

# PERMIT
# STATEMENT OF BASIS

**Applicant:** Inland Production Company **Well:** South Wells Draw 11-4-9-16

**Location:** 4/9S/16E **API:** 43-013-32104

**Ownership Issues:** The proposed well is located on BLM land. The well is located in the South Wells Draw Unit. Lands in the one-half mile radius of the well are administered by the BLM. The Federal Government is the mineral owner within the area of review. Inland and other various individuals hold the leases in the unit. Inland has provided a list of all surface, mineral and lease holders in the half-mile radius. Inland is the operator of the South Wells Draw Unit. Inland has submitted an affidavit stating that all owners and interest owners have been notified of their intent.

**Well Integrity:** The proposed well has surface casing set at 326 feet and has a cement top at the surface. A 5 ½ inch production casing is set at 6014'. A cement bond log demonstrates adequate bond in this well up to 2850 feet. A 2 7/8 inch tubing with a packer will be set at 4772 feet. A mechanical integrity test will be run on the well prior to injection. There are 6 producing wells and 4 injection wells in the area of review. All of the wells, but one, have evidence of adequate casing and cement. The well in question is the Balcron Federal #21-9Y, located in Section 9, Township 9 South, Range 16 East. This well is permitted as an injection well with the stipulation that a Radioactive Tracer Survey will be run when the injection pressure builds up to 500 psi. Inland has provided information showing that the injection zone for the proposed well is lower in the stratigraphic column than the injection interval on the 21-9Y. At he time the R.A.T. Survey is run on the 21-9Y, if the cement does not prove adequate, remedial action will be taken or the well will be plugged.

**Ground Water Protection:** According to Technical Publication No. 92 the base of moderately saline water is at a depth of approximately 1300 feet. Injection shall be limited to the interval between 4803 feet and 5890 feet in the Green River Formation. Information submitted by Inland indicates that the fracture gradient for the 11-4-9-16 well is .846 psi/ft., which was the lowest reported fracture gradient for the injection zone. The resulting minimum fracture pressure for the proposed injection interval is 2357 psig. The requested maximum pressure is 2357 psig. The anticipated average injection pressure is 1100 psig. Injection at this pressure should not initiate any new fractures or propagate existing fractures in the adjacent confining intervals. Any ground water present should be adequately protected.

**Oil/Gas& Other Mineral Resources Protection:** The Board of Oil, Gas & Mining approved the South Wells Draw Unit July 16, 2001. Correlative rights issues were addressed at this time. Previous reviews in this area indicate that other mineral resources in the area have been protected or are not at issue.

**Bonding:** Bonded with the BLM

**Actions Taken and Further Approvals Needed:** A notice of agency action has been sent to the Salt Lake Tribune and the Uinta Basin Standard. A casing/tubing pressure test will be required prior to injection. It is recommended that approval of this application be granted.

Note: Applicable technical publications concerning water resources in the general vicinity of this project have been reviewed and taken into consideration during the permit review process.

Reviewer(s): Brad Hill Date 02/06/2002

State of Utah
DEPARTMENT OF NATURAL RESOURCES
DIVISION OF OIL, GAS AND MINING

Michael O. Leavitt
Governor
Kathleen Clarke
Executive Director
Lowell P. Braxton
Division Director

1594 West North Temple, Suite 1210
PO Box 145801
Salt Lake City, Utah 84114-5801
801-538-5340
801-359-3940 (Fax)
801-538-7223 (TDD)

February 6, 2002

Inland Production Company
410 Seventeenth Street, Suite 700
Denver, Colorado 80202

Re: South Wells Draw Unit Well: South Wells Draw 11-4-9-16, Section 4, Township 9 South, Range 16 East, Duchesne County, Utah

Gentlemen:

Pursuant to Utah Admin. Code R649-5-3-3, the Division of Oil, Gas and Mining (the "Division") issues its administrative approval for conversion of the referenced well to a Class II injection well. Accordingly, the following stipulations shall apply for full compliance with this approval:

1. Compliance with all applicable requirements for the operation, maintenance and reporting for Underground Injection Control ("UIC") Class II injection wells pursuant to Utah Admin. Code R649-1 et seq.

2. Conformance with all conditions and requirements of the complete application submitted by Inland Production Company.

3. A casing\tubing pressure test shall be conducted prior to commencing injection.

If you have any questions regarding this approval or the necessary requirements, please contact Brad Hill or Dan Jarvis at this office.

Sincerely,

John R. Baza
Associate Director

er

cc: Inland Production Company, Myton
Dan Jackson, Environmental Protection Agency
Bureau of Land Management, Vernal

May 5, 1987

STATE OF UT[redacted]
DEPARTMENT OF NAT[redacted] RESOURCES
DIVISION OF OIL, GAS, AND MINING

5. LEASE DESIGNATION AND SERIAL NO.
UTU-77338

1. **SUNDRY NOTICES AND REPORTS ON WELLS**

(Do not use this form for proposals to drill or to deepen or plug back to a different reservoir.
Use "APPLICATION FOR PERMIT--" for such proposals.)

6. IF INDIAN, ALLOTTEE OR TRIBAL NAME
N/A

OIL WELL [ ] GAS WELL [ ] OTHER [X]

7. UNIT AGREEMENT NAME
NA

2. NAME OF OPERATOR
INLAND PRODUCTION COMPANY

8. FARM OR LEASE NAME
S WELLS DRAW 11-4-9-16

3. ADDRESS OF OPERATOR
Rt. 3 Box 3630, Myton Utah 84052
435-646-3721

9. WELL NO.
S WELLS DRAW 11-4-9-16

4. LOCATION OF WELL (Report location clearly and in accordance with any State requirements.*
See also space 17 below.)
At surface
NE/SW Section 4, T9S R16E
2067 FSL 1990 FWL

10. FIELD AND POOL, OR WILDCAT
MONUMENT BUTTE

11. SEC., T., R., M., OR BLK. AND SURVEY OR AREA
NE/SW Section 4, T9S R16E

| 14. API NUMBER | 15. ELEVATIONS (Show whether DF, RT, GR, etc.) | 12. COUNTY OR PARISH | 13. STATE |
|---|---|---|---|
| 43-013-32104 | 5774 KB | DUCHESNE | UT |

16. **Check Appropriate Box To Indicate Nature of Notice, Report, or Other Data**

| NOTICE OF INTENTION TO: | | | | SUBSEQUENT REPORT OF: | | | |
|---|---|---|---|---|---|---|---|
| TEST WATER SHUT-OFF | [ ] | PULL OR ALTER CASING | [ ] | WATER SHUT-OFF | [ ] | REPAIRING WELL | [ ] |
| FRACTURE TREAT | [ ] | MULTIPLE COMPLETE | [ ] | FRACTURE TREATMENT | [ ] | ALTERING CASING | [ ] |
| SHOOT OR ACIDIZE | [ ] | ABANDON* | [ ] | SHOOTING OR ACIDIZING | [ ] | ABANDONMENT* | [ ] |
| REPAIR WELL | [ ] | | [ ] | (OTHER) | [X] | Recompletion | |
| (OTHER) | | | [ ] | (Note: Report results of multiple completion on Well Completion or Recompletion Report and Log form.) | | | |

17. DESCRIBE PROPOSED OR COMPLETED OPERATIONS. (Clearly state all pertinent details, and give pertinent dates, including estimated date of starting any proposed work. If well is directionally drilled, give subsurface locations and measured and true vertical depths for all markers and zones pertinent to this work.)*

The subject well was recompleted in the Green River formation. Five new Green River intervals were perforated, the LODC 5442' - 5450', LODC 5530' - 55425', LODC 5594' - 5600', LODC 5621' - 5626', and the LODC 5640' - 5644' with 4 jspf for a total of 140 shots.

18. I hereby certify that the foregoing is true and correct

SIGNED Krisha Russell TITLE Production Clerk DATE 5/29/02
Krisha Russell

cc: BLM

(This space for Federal or State office use)

APPROVED BY_____ TITLE_____ DATE_____

CONDITIONS OF APPROVAL, IF ANY:

* See Instructions On Reverse Side

RECEIVED
MAY 31 2002
DIVISION OF
OIL, GAS AND MINING

Inland
PRODUCTION COMPANY
*A Subsidiary of Inland Resources Inc.*

May 29, 2002

Mr. Dan Jarvis
State of Utah, DOGM
1594 West North Temple – Suite 1310
P.O. Box 145801
Salt Lake City, Utah 84114-5801

RE: Recompletion
South Wells Draw 11-4-9-16
Sec. 4, T9S, R16E
API # 43-013-32104

Dear Mr. Dan Jarvis:

The subject well had five new perforations added in the Green River formation. Please find enclosed the sundry. If you have any questions please let me know.

Sincerely,

Krisha Russell

Krisha Russell
Production Clerk

RECEIVED
MAY 31 2002
DIVISION OF
OIL, GAS AND MINING

Inland Production Company Field Office • Route 3, Box 3630 • Myton, UT 84052 • 435-646-3721 • FAX 435-646-3031
Corporate Office • 410 Seventeenth Street, Suite 700 • Denver, CO 80202 • 303-893-0102 • FAX 303-893-0103

May 5, 1987

STATE OF UT[illegible]
DEPARTMENT OF NAT[illegible] RESOURCES
DIVISION OF OIL, GAS, AND MINING

5. LEASE DESIGNATION AND SERIAL NO.
UTU-77338

1. **SUNDRY NOTICES AND REPORTS ON WELLS**

(Do not use this form for proposals to drill or to deepen or plug back to a different reservoir.
Use "APPLICATION FOR PERMIT--" for such proposals.)

6. IF INDIAN, ALLOTTEE OR TRIBAL NAME
N/A

OIL WELL [ ] GAS WELL [ ] OTHER [X]

7. UNIT AGREEMENT NAME
NA

2. NAME OF OPERATOR
INLAND PRODUCTION COMPANY

8. FARM OR LEASE NAME
S WELLS DRAW 11-4-9-16

3. ADDRESS OF OPERATOR
Rt. 3 Box 3630, Myton Utah 84052
435-646-3721

9. WELL NO.
S WELLS DRAW 11-4-9-16

4. LOCATION OF WELL (Report location clearly and in accordance with any State requirements.*
See also space 17 below.)
At surface
NE/SW Section 4, T9S R16E
2067 FSL 1990 FWL

10. FIELD AND POOL, OR WILDCAT
MONUMENT BUTTE

11. SEC., T., R., M., OR BLK. AND SURVEY OR AREA
NE/SW Section 4, T9S R16E

| 14. API NUMBER | 15. ELEVATIONS (Show whether DF, RT, GR, etc.) | 12. COUNTY OR PARISH | 13. STATE |
|---|---|---|---|
| 43-013-32104 | 5774 KB | DUCHESNE | UT |

16. **Check Appropriate Box To Indicate Nature of Notice, Report, or Other Data**

| NOTICE OF INTENTION TO: | | | | SUBSEQUENT REPORT OF: | | | |
|---|---|---|---|---|---|---|---|
| TEST WATER SHUT-OFF | [ ] | PULL OR ALTER CASING | [ ] | WATER SHUT-OFF | [ ] | REPAIRING WELL | [ ] |
| FRACTURE TREAT | [ ] | MULTIPLE COMPLETE | [ ] | FRACTURE TREATMENT | [ ] | ALTERING CASING | [ ] |
| SHOOT OR ACIDIZE | [ ] | ABANDON* | [ ] | SHOOTING OR ACIDIZING | [ ] | ABANDONMENT* | [ ] |
| REPAIR WELL | [ ] | | [ ] | (OTHER) | [X] | Injection Conversion | |
| (OTHER) | | | [ ] | (Note: Report results of multiple completion on Well Completion or Recompletion Report and Log form.) | | | |

17. DESCRIBE PROPOSED OR COMPLETED OPERATIONS. (Clearly state all pertinent details, and give pertinent dates, including estimated date of starting any proposed work. If well is directionally drilled, give subsurface locations and measured and true vertical depths for all markers and zones pertinent to this work.)*

The subject well was converted from a producing to an injection well on 5/24/02. The rods and tubing anchor were removed an a packer was inserted in the bottom hole assembly at 4732'. On 5/28/02 Mr. Dennis Ingram w/State DOGM was notified of the intent to conduct a MIT on the casing. On 5/29/02 the casing was pressured to 1130 psi w/no pressure loss charted in the 1/2 hour test. Mr. Dennis Ingram was there to witness the test.

18. I hereby certify that the foregoing is true and correct

SIGNED Krisha Russell TITLE Production Clerk DATE 5/29/02
Krisha Russell

cc: BLM

(This space for Federal or State office use)

APPROVED BY _____ TITLE _____ DATE _____

CONDITIONS OF APPROVAL, IF ANY:

* See Instructions On Reverse Side

RECEIVED
MAY 31 2002
DIVISION OF
OIL, GAS AND MINING

231-04

# Mechanical Integrity Test
# Casing or Annulus Pressure Test


**Inland Production Company**
Rt. 3 Box 3630
Myton, UT 84052
435-646-3721


**Witness:** _____ **Date** 5 / 29 / 02 **Time** 9:00 (am) pm

**Test Conducted by:** Roddie Bird

**Others Present:** Sam Fullmyer

**Well** Wells Draw 11-4-9-16 **Field:** Wells Draw

**Well Location:** NE/SW Sec 4 - T9S - R16E **API No:** 43-013-32104

Duchesne Co. Utah

| Time | Casing Pressure | |
|---|---|---|
| 0 min | 1130 | psig |
| 5 | 1130 | psig |
| 10 | 1130 | psig |
| 15 | 1130 | psig |
| 20 | 1130 | psig |
| 25 | 1130 | psig |
| 30 min | 1130 | psig |
| 35 | | psig |
| 40 | | psig |
| 45 | | psig |
| 50 | | psig |
| 55 | | psig |
| 60 min | | psig |

**Tubing pressure:** 270 psig

Result: (Pass) **Fail**

RECEIVED
MAY 3 1 2002
DIVISION OF
OIL, GAS AND MINING

**Signature of Witness:** _____

**Signature of Person Conducting Test:** Roddie Bird

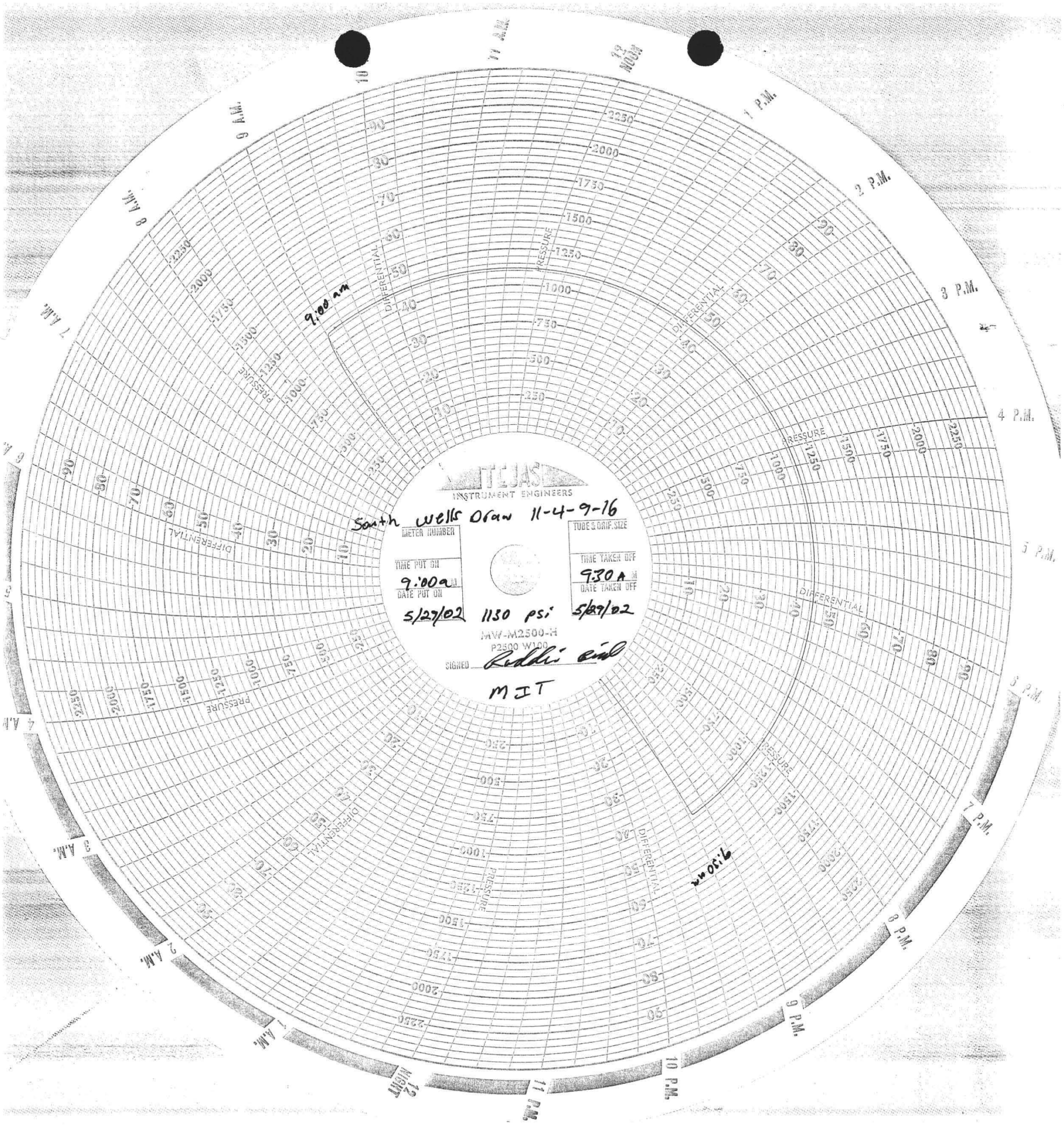


RECEIVED

MAY 3 1 2002

DIVISION OF
OIL, GAS AND MINING

Inland
PRODUCTION COMPANY
*A Subsidiary of Inland Resources Inc.*

May 29, 2002

Mr. Dan Jarvis
State of Utah, DOGM
1594 West North Temple – Suite 1310
P.O. Box 145801
Salt Lake City, Utah 84114-5801

RE: Injection Conversion
South Wells Draw 11-4-9-16
Sec.4, T9S, R16E
API # 43-013-32104

Dear Mr. Dan Jarvis,

Please find enclosed the sundry, tabular and a copy of the chart on the South Wells Draw 11-4-9-16. The subject well was placed from a producing to an injection well. If you have any questions please let me know.

Sincerely,

Krisha Russell

Krisha Russell
Production Clerk

RECEIVED
MAY 3 1 2002
DIVISION OF
OIL, GAS AND MINING

Inland Production Company Field Office • Route 3, Box 3630 • Myton, UT 84052 • 435-646-3721 • FAX 435-646-3031
Corporate Office • 410 Seventeenth Street, Suite 700 • Denver, CO 80202 • 303-893-0102 • FAX 303-893-0103

State of Utah
DEPARTMENT OF NATURAL RESOURCES
DIVISION OF OIL, GAS AND MINING

Michael O. Leavitt
Governor
Kathleen Clarke
Executive Director
Lowell P. Braxton
Division Director

1594 West North Temple, Suite 1210
PO Box 145801
Salt Lake City, Utah 84114-5801
801-538-5340
801-359-3940 (Fax)
801-538-7223 (TDD)

# UNDERGROUND INJECTION CONTROL PERMIT

## Cause No. 231-04

**Operator:** Inland Production Company

**Well:** South Wells Draw 11-4-9-16

**Location:** Section 4, Township 9 South, Range 16 East

**County:** Duchesne

**API No.:** 43-013-32104

**Well Type:** Enhanced Recovery (waterflood)

## Stipulations of Permit Approval

1. Approval for conversion to Injection Well issued on February 6, 2002.
2. Maximum Allowable Injection Pressure: 2357 psig
3. Maximum Allowable Injection Rate: (restricted by pressure limitation)
4. Injection Interval: Green River Formation (4803 feet - 5890 feet)

Approved by: John R. Baza
Associate Director

6/4/2002
Date

cc: Dan Jackson Environmental Protection Agency
Bureau of Land Management, Vernal
Inland Production Company, Myton

FORM 3160-5
(June 1990)

UNITED STATES
DEPARTMENT OF THE INTERIOR
BUREAU OF LAND MANAGEMENT

FORM APPROVED
Budget Bureau No. 1004-0135
Expires: March 31, 1993

# SUNDRY NOTICES AND REPORTS ON WELLS

Do not use this form for proposals to drill or to deepen or reentry a different reservoir.
Use "APPLICATION FOR PERMIT -" for such proposals

*SUBMIT IN TRIPLICATE*

5. Lease Designation and Serial No.
**UTU-77338**

6. If Indian, Allottee or Tribe Name
**NA**

7. If Unit or CA, Agreement Designation
**NA**

1. Type of Well
[ ] Oil Well [ ] Gas Well [X] Other

8. Well Name and No.
**S WELLS DRAW 11-4-9-16**

9. API Well No.
**43-013-32104**

2. Name of Operator
**INLAND PRODUCTION COMPANY**

10. Field and Pool, or Exploratory Area
**MONUMENT BUTTE**

3. Address and Telephone No.
**Rt. 3 Box 3630, Myton Utah, 84052 435-646-3721**

11. County or Parish, State
**DUCHESNE COUNTY, UTA**

4. Location of Well (Footage, Sec., T., R., m., or Survey Description)
**2067 FSL 1990 FWL NE/SW Section 4, T9S R16E**

12. **CHECK APPROPRIATE BOX(s) TO INDICATE NATURE OF NOTICE, REPORT, OR OTHER DATA**

| TYPE OF SUBMISSION | TYPE OF ACTION | |
|---|---|---|
| [ ] Notice of Intent | [ ] Abandonment | [ ] Change of Plans |
| [X] Subsequent Report | [ ] Recompletion | [ ] New Construction |
| [ ] Final Abandonment Notice | [ ] Plugging Back | [ ] Non-Routine Fracturing |
| | [ ] Casing Repair | [ ] Water Shut-Off |
| | [ ] Altering Casing | [ ] Conversion to Injection |
| | [X] Other **Report of first injection** | [ ] Dispose Water |

(Note: Report results of multiple completion on Well Completion or Recompletion Report and Log form.)

13. Describe Proposed or Completed Operations (Clearly state all pertinent details, and give pertinent dates, including estimated date of starting any proposed work. If well is directionally drilled, give subsurface locations and measured and true vertical depths for all markers and zones pertinent to this work.)*

The above referenced well was put on injection at 11:00 a.m. on 6/7/02.

RECEIVED
JUN 10 2002
DIVISION OF
OIL, GAS AND MINING

14. I hereby certify that the foregoing is true and correct
Signed Mandie Crozier Title Permit Clerk Date 6/7/2002
Mandie Crozier

CC: UTAH DOGM

(This space for Federal or State office use)
Approved by _____ Title _____ Date _____
Conditions of approval, if any:

Title 18 U.S.C. Section 1001, makes it a crime for any person knowingly and willfully to make to any department or agency of the United States any false, fictitious or fradulent statements or representations as to any matter within its jurisdiction.

Corporations Section
P.O.Box 13697
Austin, Texas 78711-3697

Geoffrey S. Connor
Secretary of State

# Office of the Secretary of State

The undersigned, as Secretary of State of Texas, does hereby certify that the attached is a true and correct copy of each document on file in this office as described below:

Newfield Production Company
Filing Number: 41530400

Articles of Amendment September 02, 2004

In testimony whereof, I have hereunto signed my name officially and caused to be impressed hereon the Seal of State at my office in Austin, Texas on September 10, 2004.

Secretary of State

ARTICLES OF AMENDMENT
TO THE
ARTICLES OF INCORPORATION
OF
INLAND PRODUCTION COMPANY

FILED
In the Office of the
Secretary of State of Texas

SEP 02 2004

Corporations Section

Pursuant to the provisions of Article 4.04 of the Texas Business Corporation Act (the "TBCA"), the undersigned corporation adopts the following articles of amendment to the articles of incorporation:

ARTICLE 1 – Name

The name of the corporation is Inland Production Company.

ARTICLE 2 – Amended Name

The following amendment to the Articles of Incorporation was approved by the Board of Directors and adopted by the shareholders of the corporation on August 27, 2004.

The amendment alters or changes Article One of the Articles of Incorporation to change the name of the corporation so that, as amended, Article One shall read in its entirety as follows:

"ARTICLE ONE – The name of the corporation is Newfield Production Company."

ARTICLE 3 – Effective Date of Filing

This document will become effective upon filing.

The holder of all of the shares outstanding and entitled to vote on said amendment has signed a consent in writing pursuant to Article 9.10 of the TBCA, adopting said amendment, and any written notice required has been given.

IN WITNESS WHEREOF, the undersigned corporation has executed these Articles of Amendment as of the 1st day of September, 2004.

INLAND RESOURCES INC.

By: Susan G. Riggs
Susan G. Riggs, Treasurer

**UTSL-**
071572A
065914

**UTU-**

02458
03563
03563A
04493
05843
07978
09803
017439B
017985
017991
017992
018073
019222
020252
020252A
020254
020255
020309D
022684A
027345
034217A
035521
035521A
038797
058149
063597A
075174
096547
096550

10760
11385
13905
15392
15855
16535
16539
16544
17036
17424
18048
18399
19267
26026A
30096
30103
31260
33992
34173
34346
36442
36846
38411
38428
38429
38431
39713
39714
40026
40652
40894
41377
44210
44426
44430
45431
47171
49092
49430
49950
50376
50385
50376
50750
51081
52013
52018
58546
61052
62848
63073B
63073D
63073E
63073O
64917
64379
64380
64381
64805
64806
64917
65207
65210
65635
65967
65969
65970
66184
66185
66191
67168
67170
67208
67549
67586
67845
68105
68548
68618
69060
69061
69744
70821
72103
72104
72105
72106
72107
72108
73086
73087
73807
73088
73089
73520A
74108
74805
74806
74807
74808
74389
74390
74391
74392
74393
74398
74399
74400
74404
74405
74406
74411
74805
74806
74826
74827
74835
74868
74869
74870
74872
74970
75036
75037
75038
75039
75075
75078
75089
75090
75234
75238
76239
76240
76241
76560
76561
76787
76808
76813
76954
76956
77233
77234
77235
77337
77338
77339
77357
77359
77365
77369
77370
77546
77553
77554
78022
79013
79014
79015
79016
79017
79831
79832
79833
79831
79834
80450
80915
81000

63073X
63098A
68528A
72086A
72613A
73520X
74477X
75023X
76189X
76331X
76788X
77098X
77107X
77236X
77376X
78560X
79485X
79641X
80207X
81307X

# United States Department of the Interior

BUREAU OF LAND MANAGEMENT
Utah State Office
P.O. Box 45155
Salt Lake City, UT 84145-0155
http://www.blm.gov

TAKE PRIDE IN AMERICA

IN REPLY REFER TO:
3106
(UT-924)

September 16, 2004

Memorandum

To: Vernal Field Office

From: Acting Chief, Branch of Fluid Minerals

Subject: Merger Approval

Attached is an approved copy of the name change recognized by the Utah State Office. We have updated our records to reflect the merger from Inland Production Company into Newfield Production Company on September 2, 2004.

Michael L Coulthard

Michael Coulthard
Acting Chief, Branch of
Fluid Minerals

Enclosure
1. State of Texas Certificate of Registration

cc: MMS, Reference Data Branch, James Sykes, PO Box 25165, Denver CO 80225
State of Utah, DOGM, Attn: Earlene Russell, PO Box 145801, SLC UT 84114
Teresa Thompson
Joe Incardine
Connie Seare

**STATE OF UTAH**
DEPARTMENT OF NATURAL RESOURCES
DIVISION OF OIL, GAS AND MINING

UIC FORM 5

# TRANSFER OF AUTHORITY TO INJECT

| | |
|---|---|
| Well Name and Number<br>See Attached List | API Number |
| Location of Well<br>Footage : County :<br>QQ, Section, Township, Range: State : UTAH | Field or Unit Name<br>See Attached List<br>Lease Designation and Number |

**EFFECTIVE DATE OF TRANSFER:** 9/1/2004

**CURRENT OPERATOR**

Company: Inland Production Company
Address: 1401 17th Street Suite 1000
city Denver state Co zip 80202
Phone: (303) 893-0102
Comments:

Name: Brian Harris
Signature: Brian Harris
Title: Engineering Tech.
Date: 9/15/2004

**NEW OPERATOR**

Company: Newfield Production Company
Address: 1401 17th Street Suite 1000
city Denver state Co zip 80202
Phone:
Comments:

Name: Brian Harris
Signature: Brian Harris
Title: Engineering Tech.
Date: 9/15/2004

(This space for State use only)

Transfer approved by: D. Hunt
Title: Path. Services Manager

Approval Date: 9-20-04

Comments: Note: Indian Country wells will require EPA approval.

(5/2000)

RECEIVED
SEP 20 2004
DIV. OF OIL, GAS & MINING

Division of Oil, Gas and Mining

# OPERATOR CHANGE WORKSHEET

| ROUTING |
|---|
| 1. GLH |
| 2. CDW |
| 3. FILE |

Change of Operator (Well Sold) — Designation of Agent/Operator

**X Operator Name Change** — **Merger**

The operator of the well(s) listed below has changed, effective: **9/1/2004**

| **FROM:** (Old Operator): | **TO:** ( New Operator): |
|---|---|
| N5160-Inland Production Company | N2695-Newfield Production Company |
| Route 3 Box 3630 | Route 3 Box 3630 |
| Myton, UT 84052 | Myton, UT 84052 |
| Phone: 1-(435) 646-3721 | Phone: 1-(435) 646-3721 |

**CA No.** **Unit:** **SOUTH WELLS DRAW (GR)**

## WELL(S)

| NAME | SEC | TWN | RNG | API NO | ENTITY NO | LEASE TYPE | WELL TYPE | WELL STATUS | |
|---|---|---|---|---|---|---|---|---|---|
| S WELLS DRAW 5-3-9-16 | 03 | 090S | 160E | 4301332098 | 13269 | Federal | WI | A | |
| S WELLS DRAW 9-4-9-16 | 04 | 090S | 160E | 4301332102 | 13269 | Federal | WI | A | |
| S WELLS DRAW 10-4-9-16 | 04 | 090S | 160E | 4301332103 | 13269 | Federal | OW | P | |
| S WELLS DRAW 11-4-9-16 | 04 | 090S | 160E | 4301332104 | 13269 | Federal | WI | A | |
| S WELLS DRAW 12-3-9-16 | 03 | 090S | 160E | 4301332105 | 13269 | Federal | OW | P | |
| S WELLS DRAW 13-3-9-16 | 03 | 090S | 160E | 4301332106 | 13269 | Federal | OW | OPS | |
| S WELLS DRAW 14A-4-9-16 | 04 | 090S | 160E | 4301332107 | 13269 | Federal | OW | P | |
| S WELLS DRAW 15-4-9-16 | 04 | 090S | 160E | 4301332108 | 13269 | Federal | WI | A | |
| S WELLS DRAW 16-4-9-16 | 04 | 090S | 160E | 4301332110 | 13269 | Federal | OW | P | |
| S WELLS DRAW 6-3-9-16 | 03 | 090S | 160E | 4301332137 | 13269 | Federal | OW | P | |
| S WELLS DRAW 11-3-9-16 | 03 | 090S | 160E | 4301332138 | 13269 | Federal | OW | OPS | |
| S WELLS DRAW 14-3-9-16 | 03 | 090S | 160E | 4301332139 | 13269 | Federal | OW | DRL | |
| S WELLS DRAW 15-5-9-16 | 05 | 090S | 160E | 4301332329 | 13269 | Federal | WI | A | K |
| S WELLS DRAW 16-5T-9-16 | 05 | 090S | 160E | 4301332433 | 13269 | Federal | OW | P | K |
| | | | | | | | | | |
| | | | | | | | | | |
| | | | | | | | | | |
| | | | | | | | | | |
| | | | | | | | | | |
| | | | | | | | | | |
| | | | | | | | | | |
| | | | | | | | | | |

## OPERATOR CHANGES DOCUMENTATION

**Enter date after each listed item is completed**

1. (R649-8-10) Sundry or legal documentation was received from the **FORMER** operator on: 9/15/2004
2. (R649-8-10) Sundry or legal documentation was received from the **NEW** operator on: 9/15/2004
3. The new company was checked on the **Department of Commerce, Division of Corporations Database on:** 2/23/2005
4. Is the new operator registered in the State of Utah: YES Business Number: 755627-0143
5. If **NO**, the operator was contacted contacted on:

6a. (R649-9-2)Waste Management Plan has been received on: IN PLACE

6b. Inspections of LA PA state/fee well sites complete on: waived

7. **Federal and Indian Lease Wells:** The BLM and or the BIA has approved the merger, name change, or operator change for all wells listed on Federal or Indian leases on: BLM BIA

8. **Federal and Indian Units:**
The BLM or BIA has approved the successor of unit operator for wells listed on: n/a

9. **Federal and Indian Communization Agreements ("CA"):**
The BLM or BIA has approved the operator for all wells listed within a CA on: na/

10. **Underground Injection Control ("UIC")** The Division has approved UIC Form 5, **Transfer of Authority to Inject,** for the enhanced/secondary recovery unit/project for the water disposal well(s) listed on: 2/23/2005

**DATA ENTRY:**

1. Changes entered in the **Oil and Gas Database on:** 2/28/2005
2. Changes have been entered on the **Monthly Operator Change Spread Sheet on:** 2/28/2005
3. Bond information entered in RBDMS on: 2/28/2005
4. Fee/State wells attached to bond in RBDMS on: 2/28/2005
5. Injection Projects to new operator in RBDMS on: 2/28/2005
6. Receipt of Acceptance of Drilling Procedures for APD/New on: waived

**FEDERAL WELL(S) BOND VERIFICATION:**

1. Federal well(s) covered by Bond Number: UT 0056

**INDIAN WELL(S) BOND VERIFICATION:**

1. Indian well(s) covered by Bond Number: 61BSBDH2912

**FEE & STATE WELL(S) BOND VERIFICATION:**

1. (R649-3-1) The **NEW** operator of any fee well(s) listed covered by Bond Number 61BSBDH2919

2. The **FORMER** operator has requested a release of liability from their bond on: n/a*
The Division sent response by letter on: n/a

**LEASE INTEREST OWNER NOTIFICATION:**

3. (R649-2-10) The **FORMER** operator of the fee wells has been contacted and informed by a letter from the Division of their responsibility to notify all interest owners of this change on: n/a

**COMMENTS:**

*Bond rider changed operator name from Inland Production Company to Newfield Production Company - **received 2/23/05**

FORM 3160-5
(September 2001)

UNITED STATES
DEPARTMENT OF THE INTERIOR
BUREAU OF LAND MANAGEMENT

FORM APPROVED
OMB No. 1004-0135
Expires January 31,2004

## SUNDRY NOTICES AND REPORTS ON WELLS

**Do not use this form for proposals to drill or to re-enter an abandoned well. Use Form 3160-3 (APD) for such proposals.**

**SUBMIT IN TRIPLICATE - Other Instructions on reverse side**

5. Lease Serial No.
USA UTU-77338

6. If Indian, Allottee or Tribe Name.

7. If Unit or CA/Agreement, Name and/or
S WELLS DRAW UNIT

1. Type of Well
☒ Oil Well ☐ Gas Well ☑ Other WI

8. Well Name and No.
S WELLS DRAW 11-4-9-16

2. Name of Operator
NEWFIELD PRODUCTION COMPANY

9. API Well No.
4301332104

3a. Address Route 3 Box 3630
Myton, UT 84052

3b. Phone *(include are code)*
435.646.3721

10. Field and Pool, or Exploratory Area
MONUMENT BUTTE

4. Location of Well *(Footage, Sec., T., R., M., or Survey Description)*
2067 FSL 1990 FWL

NESW Section 4 T9S R16E

11. County or Parish, State
DUCHESNE, UT

### 12. CHECK APPROPRIATE BOX(ES) TO INIDICATE NATURE OF NOTICE, OR OTHER DATA

| TYPE OF SUBMISSION | TYPE OF ACTION | | | |
|---|---|---|---|---|
| ☐ Notice of Intent | ☐ Acidize | ☐ Deepen | ☐ Production(Start/Resume) | ☐ Water Shut-Off |
| ☒ Subsequent Report | ☐ Alter Casing | ☐ Fracture Treat | ☐ Reclamation | ☐ Well Integrity |
| ☐ Final Abandonment | ☐ Casing Repair | ☐ New Construction | ☐ Recomplete | ☒ Other Five Year MIT |
| | ☐ Change Plans | ☐ Plug & Abandon | ☐ Temporarily Abandon | |
| | ☐ Convert to | ☐ Plug Back | ☐ Water Disposal | |

13. Describe Proposed or Completed Operation (clearly state all pertinent details, including estimated starting date of any proposed work and approximate duration thereof. If the proposal is to deepen directionally or recomplete horizontally, give subsurface locations and measured and true vertical depths of all pertinent markers and zones. Attach the Bond under which the work will be performed or provide the Bond No. on file with BLM/BIA. Required subsequent reports shall be filed within 30 days following completion of the involved operations. If the operation results in a multiple completion or recompletion in a new interval, a Form 3160-4 shall be filed once testing has been completed. Final Abandonment Notices shall be filed only after all requirements, including reclamation, have been completed, and the operator has determined that the site is ready for final inspection.)

On 4/11/07 Dennis Ingram with the State of Utah (DOGM) was contacted concerning the 5 Year MIT on the above listed well. Permission was given at that time to perform the test on 4/12/07. On 4/12/07 the casing was pressured up to 1500 psig and charted for 30 minutes with no pressure loss. The well was injecting during the test . The tubing pressure was 1900 psig during the test. There was not a State representative available to witness the test.
API# 43-013-32104

Accepted by the
Utah Division of
Oil, Gas and Mining
Date: 04-23-07
By: [signature]

COPY SENT TO OPERATOR
Date: 4/24/07
Initials: CHD

I hereby certify that the foregoing is true and correct *(Printed/ Typed)*
Callie Ross

Title
Production Clerk

Signature Callie Ross

Date
04/18/2007

**THIS SPACE FOR FEDERAL OR STATE OFFICE USE**

Approved by

Title

Date

Conditions of approval, if any, are attached. Approval of this notice does not warrant or certify that the applicant holds legal or equitable title to those rights in the subject lease which would entitle the applicant to conduct operations thereon.

Office

Title 18 U.S.C. Section 1001 and Title 43 U.S.C. Section 1212, make it a crime for any person knowingly and willfully to make to any department or agency of the United States any false, fictitious and fraudulent statements or representations as to any matter within its jurisdiction

*(Instructions on reverse)*

RECEIVED
APR 19 2007
DIV. OF OIL, GAS & MINING

# Mechanical Integrity Test
# Casing or Annulus Pressure Test


**Inland Production Company**
Rt. 3 Box 3630
Myton, UT 84052
435-646-3721


**Witness:** _____ **Date** 4 / 12 / 07 **Time** 12:00 am pm

**Test Conducted by:** Gordon Womack

**Others Present:** _____

| | |
|---|---|
| **Well:** S. Wells Draw 11-4-9-16 | **Field:** Monument Butte |
| **Well Location:** NE/SW Sec 4-T9S-R16E Duchesne County, UT | **API No:** UTU79641X 43-013-32104 |

| Time | Casing Pressure | |
|---|---|---|
| 0 min | 1500 | psig |
| 5 | 1500 | psig |
| 10 | 1500 | psig |
| 15 | 1500 | psig |
| 20 | 1500 | psig |
| 25 | 1500 | psig |
| 30 min | 1500 | psig |
| 35 | | psig |
| 40 | | psig |
| 45 | | psig |
| 50 | | psig |
| 55 | | psig |
| 60 min | | psig |

**Tubing pressure:** 1900 psig

**Result:** Pass Fail

**Signature of Witness:** _____

**Signature of Person Conducting Test:** [signature]

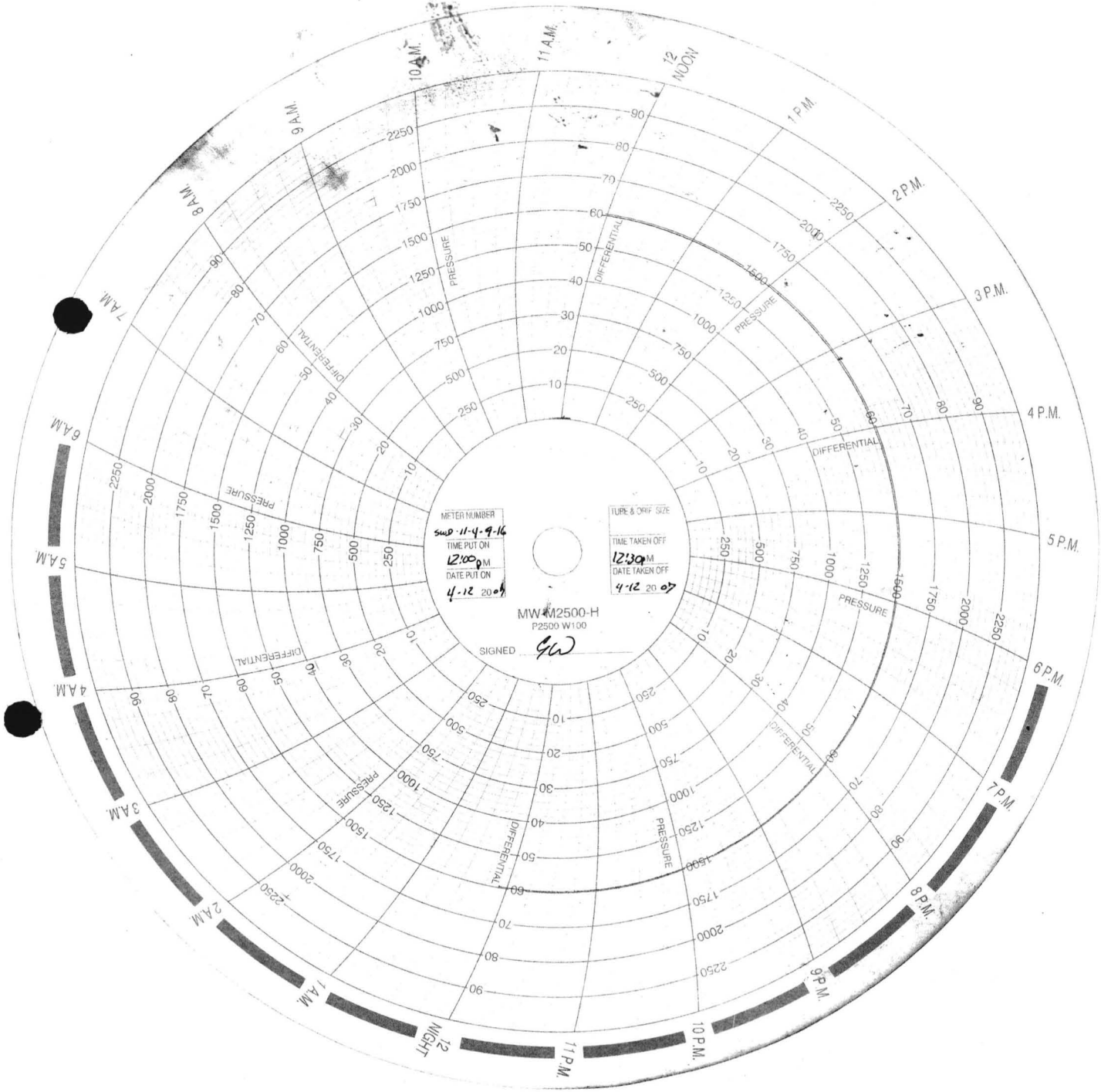
METER NUMBER
swp-11-4-9-16
TIME PUT ON
12:00 pM
DATE PUT ON
4-12 2007
TUBE & ORIF SIZE
TIME TAKEN OFF
12:30 pM
DATE TAKEN OFF
4-12 2007
MW#M2500-H
P2500 W100
SIGNED
GW
12 NOON
1 P.M.
2 P.M.
3 P.M.
4 P.M.
5 P.M.
6 P.M.
7 P.M.
8 P.M.
9 P.M.
10 P.M.
11 P.M.
12 NIGHT
1 A.M.
2 A.M.
3 A.M.
4 A.M.
5 A.M.
6 A.M.
7 A.M.
8 A.M.
9 A.M.
10 A.M.
11 A.M.
PRESSURE
DIFFERENTIAL

# South Wells Draw Fed #11-4-9-16

Spud Date: 10/21/98

Put on Production: 11/21/98
Put on Injection: 5/29/02

GL: 5734' KB: 5744'

Initial Production: 93 BOPD; 141 MCFD; 6 BWPD

Wellbore Diagram

## SURFACE CASING

CSG SIZE: 8-5/8"

GRADE: J-55

WEIGHT:24#

DEPTH LANDED: 326'

HOLE SIZE:12-1/4"

CEMENT DATA: 140 sxs Premium cmt, est 6 bbls to surf. Cmt fell. Pump 6 bbl "G" cmt down 1" string. Est. 2 bbl to surface

## PRODUCTION CASING

CSG SIZE: 5-1/2"

GRADE: J-55

WEIGHT: 15.5#

LENGTH: 137 jts. (6005')

SET AT: 6014' KB

HOLE SIZE: 7-7/8"

CEMENT DATA: 295 sxs Premium modified mixed & 310 sxs class G

CEMENT TOP AT: 484' per cement bond log(Schlumberger)

## TUBING

SIZE/GRADE/WT.: 2-7/8" / J-55 / 6.5#

NO. OF JOINTS: 159 jts. (4718.39')

SEATING NIPPLE: 2-7/8" 1.10'

SN LANDED AT: 4728.39' KB

PACKER AT: 4732.49'

TOTAL STRING LENGTH: EOT @ 4836.69' KB

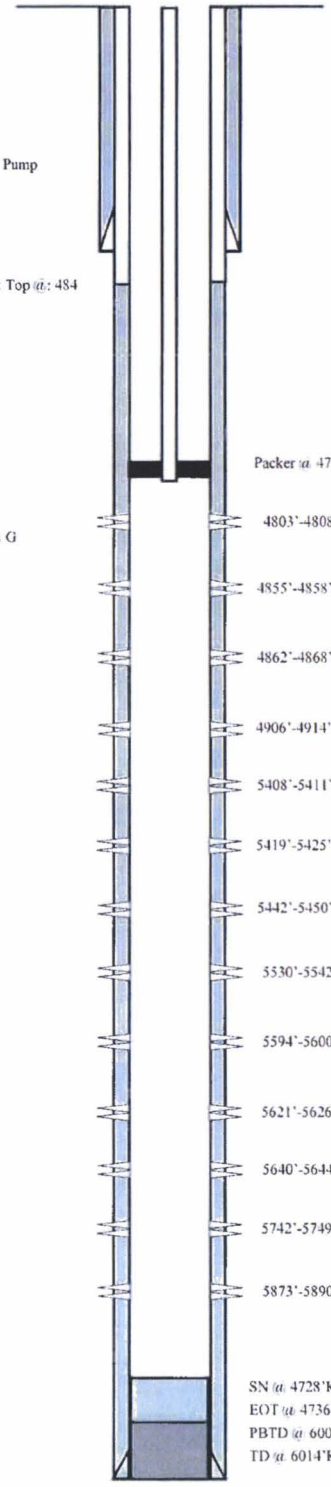


## FRAC JOB

| | |
|---|---|
| **11/12/98 5742'-5890'** | **Frac CP-0.5 & CP-2 sands as follows:** 120,312# 20/40 sand in 603 bbls Viking I-25 fluid. Treated @ avg press of 1650 psi w/avg rate of 35 BPM. ISIP: 2400 psi. |
| **11/14/98 5408'-5425'** | **Frac LODC sand as follows:** 84,000# 20/40 sand in 451 bbls Viking I-25 fluid. Treated @ avg press of 2500 psi w/avg rate of 33 BPM. Screened out to 8,300# w/8.6@ sand on perfs w/1332 gal left flush. Est 74,200# sand in perfs, sand left in casing. ISIP: 3350 psi. |
| **11/17/98 4803'-4914'** | **Frac D-S3, D-1 & D-2 sands as follows:** 92,438# 20/40 sand in 518 bbls Viking I-25 fluid. Treated @ avg press of 3000 psi w/avg rate of 34 BPM. ISIP: 3550 psi. |
| **5/24/02** | **Convert to injector.** |
| **4/12/07** | **5 Year MIT completed and submitted** |

## PERFORATION RECORD

| | | | |
|---|---|---|---|
| 11/11/98 | 5742'-5749' | 4 JSPF | 28 holes |
| 11/11/98 | 5873'-5890' | 4 JSPF | 68 holes |
| 11/13/98 | 5408'-5411' | 4 JSPF | 12 holes |
| 11/13/98 | 5419'-5425' | 4 JSPF | 24 holes |
| 11/16/98 | 4803'-4808' | 4 JSPF | 20 holes |
| 11/16/98 | 4855'-4858' | 4 JSPF | 12 holes |
| 11/16/98 | 4862'-4868' | 4 JSPF | 24 holes |
| 11/16/98 | 4906'-4914' | 4 JSPF | 32 holes |
| 5/22/02 | 5640'-5644' | 4 JSPF | 16 holes |
| 5/22/02 | 5621'-5626' | 4 JSPF | 20 holes |
| 5/22/02 | 5594'-5600' | 4 JSPF | 24 holes |
| 5/22/02 | 5530'-5542' | 4 JSPF | 48 holes |
| 5/22/02 | 5442'-5450' | 4 JSPF | 32 holes |

NEWFIELD

**South Wells Draw #11-4-9-16**
2067 FSL & 1990 FWL
NESW Section 4-T9S-R16E
Duchesne Co, Utah
API #43-013-32104; Lease #UTU-77338

CR 4/18/07

FORM 9

# STATE OF UTAH
DEPARTMENT OF NATURAL RESOURCES
DIVISION OF OIL, GAS, AND MINING

**5.LEASE DESIGNATION AND SERIAL NUMBER:** UTU-77338

## SUNDRY NOTICES AND REPORTS ON WELLS

Do not use this form for proposals to drill new wells, significantly deepen existing wells below current bottom-hole depth, reenter plugged wells, or to drill horizontal laterals. Use APPLICATION FOR PERMIT TO DRILL form for such proposals.

**6. IF INDIAN, ALLOTTEE OR TRIBE NAME:**

**7.UNIT or CA AGREEMENT NAME:** GMBU (GRRV)

**1. TYPE OF WELL** Water Injection Well

**8. WELL NAME and NUMBER:** S WELLS DRAW 11-4-9-16

**2. NAME OF OPERATOR:** NEWFIELD PRODUCTION COMPANY

**9. API NUMBER:** 43013321040000

**3. ADDRESS OF OPERATOR:** Rt 3 Box 3630 , Myton, UT, 84052

**PHONE NUMBER:** 435 646-4825 Ext

**9. FIELD and POOL or WILDCAT:** MONUMENT BUTTE

**4. LOCATION OF WELL**
**FOOTAGES AT SURFACE:** 2067 FSL 1990 FWL
**QTR/QTR, SECTION, TOWNSHIP, RANGE, MERIDIAN:** Qtr/Qtr: NESW Section: 04 Township: 09.0S Range: 16.0E Meridian: S

**COUNTY:** DUCHESNE

**STATE:** UTAH

**11.** CHECK APPROPRIATE BOXES TO INDICATE NATURE OF NOTICE, REPORT, OR OTHER DATA

**TYPE OF SUBMISSION**

- ☐ NOTICE OF INTENT — Approximate date work will start:
- ✓ SUBSEQUENT REPORT — Date of Work Completion: 3/12/2012
- ☐ SPUD REPORT — Date of Spud:
- ☐ DRILLING REPORT — Report Date:

**TYPE OF ACTION**

| | | |
|---|---|---|
| ☐ ACIDIZE | ☐ ALTER CASING | ☐ CASING REPAIR |
| ☐ CHANGE TO PREVIOUS PLANS | ☐ CHANGE TUBING | ☐ CHANGE WELL NAME |
| ☐ CHANGE WELL STATUS | ☐ COMMINGLE PRODUCING FORMATIONS | ☐ CONVERT WELL TYPE |
| ☐ DEEPEN | ☐ FRACTURE TREAT | ☐ NEW CONSTRUCTION |
| ☐ OPERATOR CHANGE | ☐ PLUG AND ABANDON | ☐ PLUG BACK |
| ☐ PRODUCTION START OR RESUME | ☐ RECLAMATION OF WELL SITE | ☐ RECOMPLETE DIFFERENT FORMATION |
| ☐ REPERFORATE CURRENT FORMATION | ☐ SIDETRACK TO REPAIR WELL | ☐ TEMPORARY ABANDON |
| ☐ TUBING REPAIR | ☐ VENT OR FLARE | ☐ WATER DISPOSAL |
| ☐ WATER SHUTOFF | ☐ SI TA STATUS EXTENSION | ☐ APD EXTENSION |
| ☐ WILDCAT WELL DETERMINATION | ✓ OTHER | OTHER: 5 YR MIT |

**12. DESCRIBE PROPOSED OR COMPLETED OPERATIONS. Clearly show all pertinent details including dates, depths, volumes, etc.**

On 03/08/2012 Chris Jensen with the State of Utah DOGM was contacted concerning the 5 Year MIT on the above listed well. On 03/12/2012 the casing was pressured up to 1175 psig and charted for 30 minutes with no pressure loss. The well was not injecting during the test. The tubing pressure was 1933 psig during the test. There was a State representative available to witness the test - Chris Jensen.

**Accepted by the Utah Division of Oil, Gas and Mining**

**Date:** April 02, 2012

**By:**

| NAME (PLEASE PRINT) | PHONE NUMBER | TITLE |
|---|---|---|
| Lucy Chavez-Naupoto | 435 646-4874 | Water Services Technician |

| SIGNATURE | DATE |
|---|---|
| N/A | 3/26/2012 |

RECEIVED: Mar. 26, 2012

# Casing or Annulus Pressure Test

Newfield Production Company
Rt. 3 Box 3630
Myton, UT 84052
435-646-3721

Witness: Chris Jensen Date 3 / 12 / 12 Time 9:00 am pm
Test Conducted by: TRENT Horrocks
Others Present:

| | |
|---|---|
| Well: SOUTH WELLS DRAW 11-4-9-16 | Field: MON. BUTTE |
| Well Location: SWD 11-4-9-16 NE/SW SEC. 4 T9S R16E DUCHESNE CNTY UT | API No: 43-013-32104 |

| Time | Casing Pressure | |
|---|---|---|
| 0 min | 1175 | psig |
| 5 | 1175 | psig |
| 10 | 1175 | psig |
| 15 | 1175 | psig |
| 20 | 1175 | psig |
| 25 | 1175 | psig |
| 30 min | 1175 | psig |
| 35 | | psig |
| 40 | | psig |
| 45 | | psig |
| 50 | | psig |
| 55 | | psig |
| 60 min | | psig |

Tubing pressure: 1933 psig

Result: Pass Fail

Signature of Witness: Jensen

Signature of Person Conducting Test: Trent Horrocks
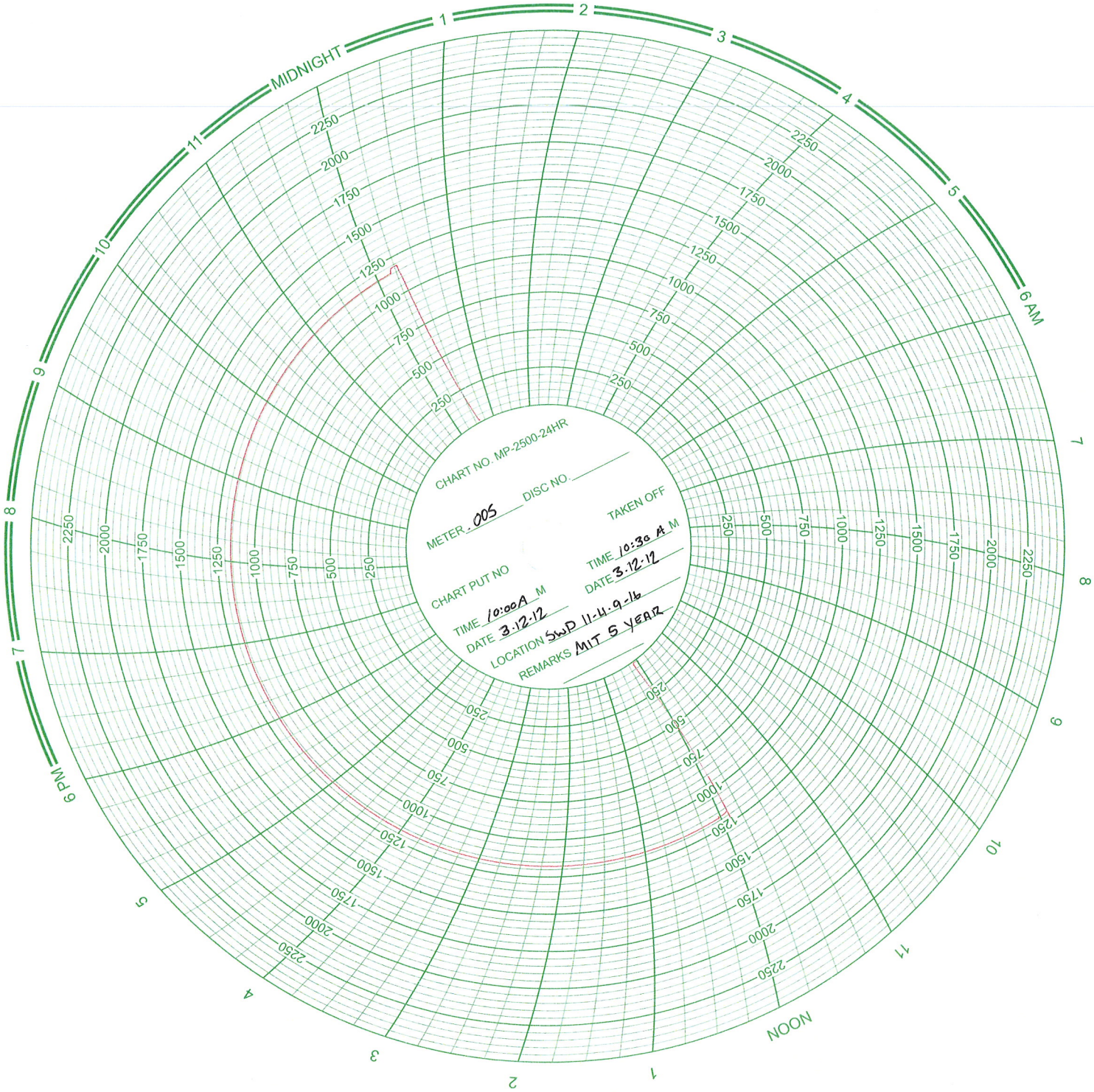
Sundry Number: 24158 API Well Number: 43013321040000