Form 3160-3
(November 1983)
(formerly 9-331C)

SUBMIT IN [illegible]PLICATE*
(Other instructions on reverse side)

Form approved.
Budget Bureau No. 1004-0136
Expires August 31, 1985

UNITED STATES
DEPARTMENT OF THE INTERIOR
BUREAU OF LAND MANAGEMENT

APPLICATION FOR PERMIT TO DRILL, DEEPEN, OR PLUG BACK

5. LEASE DESIGNATION AND SERIAL NO.: 14-20-H62-3444

6. IF INDIAN, ALLOTTEE OR TRIBE NAME:

7. UNIT AGREEMENT NAME:

8. FARM OR LEASE NAME:

9. WELL NO.: UTE TRIBAL 1-26

10. FIELD AND POOL, OR WILDCAT:

11. SEC., T., R., M., OR BLK. AND SURVEY OR AREA: SEC 26, T5S, R5W

12. COUNTY OR PARISH: DUCHESNE

13. STATE: UTAH

1a. TYPE OF WORK: DRILL [X] DEEPEN [ ] PLUG BACK [ ]

b. TYPE OF WELL: OIL WELL [XX] GAS WELL [ ] OTHER — SINGLE ZONE [ ] MULTIPLE ZONE [ ]

2. NAME OF OPERATOR: BARRETT RESOURCES CORPORATION

3. ADDRESS OF OPERATOR: PO BOX 290 * NEOLA, UTAH * 84053

4. LOCATION OF WELL (Report location clearly and in accordance with any State requirements.*)
At surface: NE ¼, NE ¼, 500 FNL, 468' FWL, SEC 26, T5S, R5W
At proposed prod. zone

14. DISTANCE IN MILES AND DIRECTION FROM NEAREST TOWN OR POST OFFICE*: 24.4 MILES SOUTH OF MYTON, UTAH

15. DISTANCE FROM PROPOSED* LOCATION TO NEAREST PROPERTY OR LEASE LINE, FT. (Also to nearest drlg. unit line, if any): 468'

16. NO. OF ACRES IN LEASE: 640'

17. NO. OF ACRES ASSIGNED TO THIS WELL: 40 ACRES

18. DISTANCE FROM PROPOSED LOCATION* TO NEAREST WELL, DRILLING, COMPLETED, OR APPLIED FOR, ON THIS LEASE, FT.: 3,000'

19. PROPOSED DEPTH: 5650'

20. ROTARY OR CABLE TOOLS: ROTARY

21. ELEVATIONS (Show whether DF, RT, GR, etc.): 6732'

22. APPROX. DATE WORK WILL START*: JULY 15, 1997

23. PROPOSED CASING AND CEMENTING PROGRAM

SIZE OF HOLE	SIZE OF CASING	WEIGHT PER FOOT	SETTING DEPTH	QUANTITY OF CEMENT
12½	8-5/8	24	280'	TO SURFACE
7-7/8	5-1/2	15.5	5650'	CMT TOP TO COVER OIL SHALE

OPERATOR REQUESTS PERMISSION TO DRILL THE SUBJECT WELL.
PLEASE SEE THE ATTACHED 10 POINT AND THE 13 POINT SURFACE USE PLAN.

IF YOU REQUIRE ADDITIONAL INFORMATION PLEASE CONTACT:

DOUG BARONE
PO BOX 290
NEOLA, UT 84053

OFFICE: 801-353-4625 CELLULAR: 801-828-6116

RECEIVED
JUN 27 1997
DIV. OF OIL, GAS & MINING

IN ABOVE SPACE DESCRIBE PROPOSED PROGRAM: If proposal is to deepen or plug back, give data on present productive zone and proposed new productive zone. If proposal is to drill or deepen directionally, give pertinent data on subsurface locations and measured and true vertical depths. Give blowout preventer program, if any.

24.

SIGNED D Barone TITLE PRODUCTION SUPERVISOR DATE JUNE 23, 1997

(This space for Federal or State office use)

PERMIT NO. 43-013-31912 APPROVAL DATE

APPROVED BY John R. Baza TITLE Petroleum Engineer DATE 7/11/97

CONDITIONS OF APPROVAL, IF ANY:

*See Instructions On Reverse Side

Title 18 U.S.C. Section 1001, makes it a crime for any person knowingly and willfully to make to any department or agency of the United States any false, fictitious or fraudulent statements or representations as to any matter within its jurisdiction.

BARRETT RESOURCES CORPORATION

Well location, UTE TRIBAL #1-26, located as shown in the NE 1/4 NE 1/4 of Section 26, T5S, R5W, U.S.B.&M. Duchesne County, Utah.

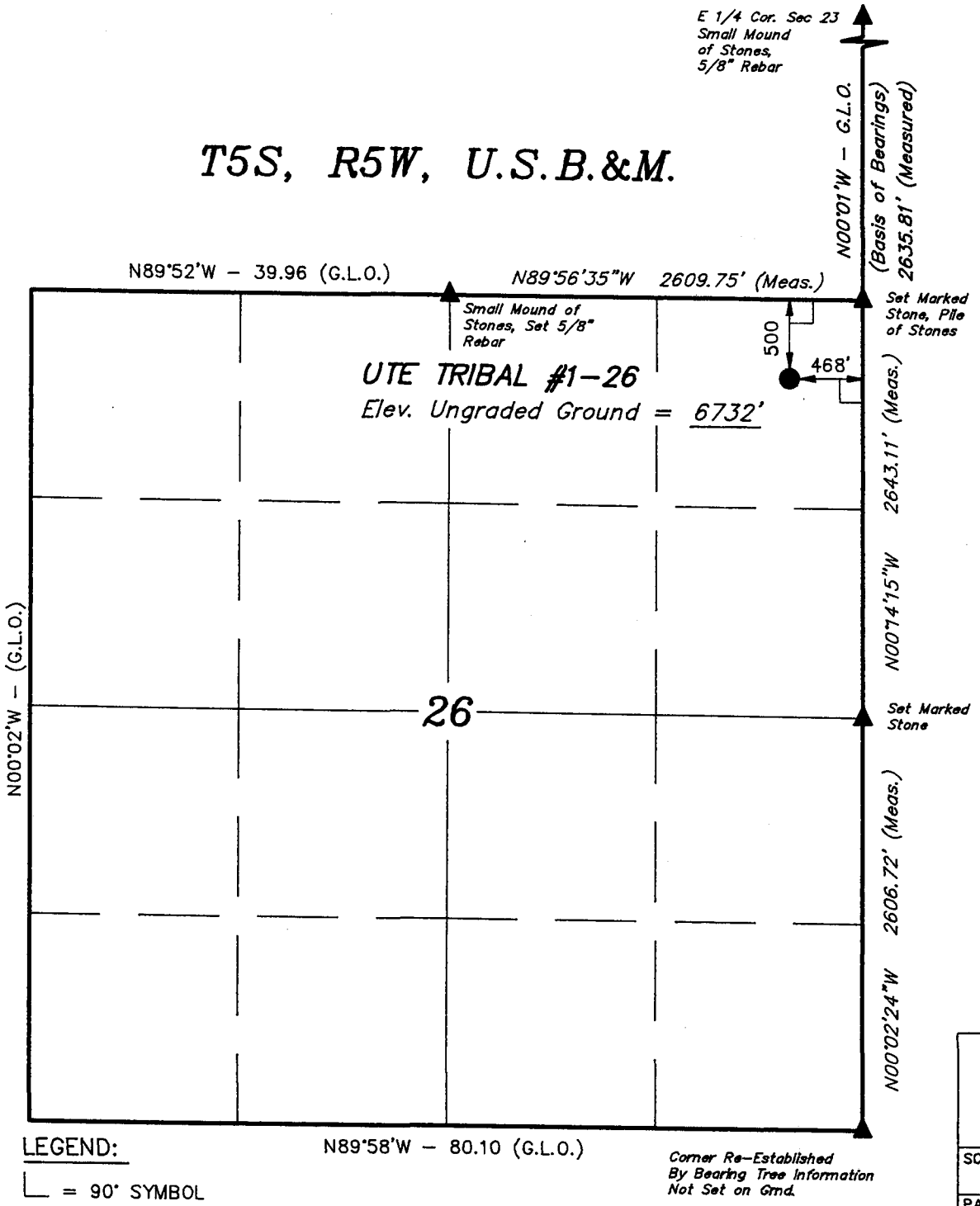

BASIS OF ELEVATION

SPOT ELEVATION AT THE SOUTHEAST CORNER OF SECTION 24, T5S, R5W, U.S.B.&M. TAKEN FROM THE DUCHESNE SE, QUADRANGLE, UTAH, DUCHESNE COUNTY, 7.5 MINUTE QUAD. (TOPOGRAPHIC MAP) PUBLISHED BY THE UNITED STATES DEPARTMENT OF THE INTERIOR, GEOLOGICAL SURVEY. SAID ELEVATION IS MARKED AS BEING 6885

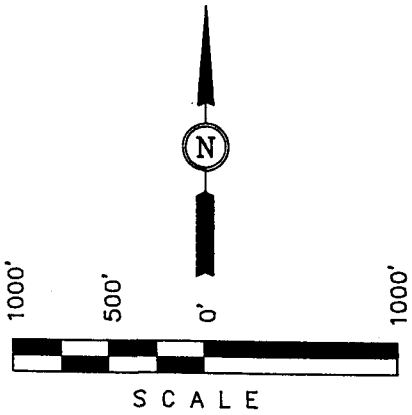

CERTIFICATE

THIS IS TO CERTIFY THAT THE ABOVE PLAT WAS PREPARED FROM FIELD NOTES OF ACTUAL SURVEYS MADE BY ME OR UNDER MY SUPERVISION AND THAT THE SAME ARE TRUE AND CORRECT TO THE BEST OF MY KNOWLEDGE AND BELIEF.

REGISTERED LAND SURVEYOR
REGISTRATION NO. 161319
STATE OF UTAH

LEGEND:

- └ = 90° SYMBOL
- ● = PROPOSED WELL HEAD.
- ▲ = SECTION CORNERS LOCATED.

UINTAH ENGINEERING & LAND SURVEYING
85 SOUTH 200 EAST - VERNAL, UTAH 84078
(801) 789-1017

SCALE	DATE SURVEYED:	DATE DRAWN:
1" = 1000'	05-20-97	06-04-97
PARTY: G.S. J.W. D.R.B.	REFERENCES: G.L.O. PLAT	
WEATHER: WARM	FILE: BARRETT RESOURCES CORP.	

SELF-CERTIFICATION STATEMENT

THE FOLLOWING SELF -CERTIFICATION STATEMENT IS PROVIDED PER FEDERAL REQUIREMENTS DATED JUNE 15, 1988.

PLEASE BE ADVISED THAT BARRETT RESOURCES CORPORATION IS CONSIDERED TO BE THE OPERATOR OF THE FOLLOWING WELL.

WELL UTE TRIBAL 1-26
NE 1/4, NE 1/4, 500 FNL 468 FWL , SECTION 26, T.5 S, R. 5 W.
LEASE BIA-14-20-H62-3444
DUCHESNE, COUNTY, UTAH

BARRETT ID # 84-0832476
BLM BOND # 6101757342

BARRETT RESOURCES CORP. IS RESPONSIBLE UNDER THE TERMS OF THE LEASE FOR THE OPERATIONS CONDUCTED UPON THE LEASE LANDS.

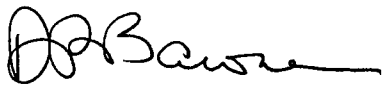

D.P. BARONE
PRODUCTION SUPERVISOR
BARRETT RESOURCES CORP.
BOX 290
NEOLA, UT. 84053
801-353-4625

HAZARDOUS MATERIAL DECLARATION

FOR WELL NO. UTE TRIBAL 1-26 LEASE NO. 14-20-H62-3444

BARRETT RESOURCES CORP. GUARENTEES THAT DURING THE DRILLING AND COMPLETION OF THE ABOVE REFERENCED WELLS, WE WILL NOT USE, PRODUCE, OR STORE, TRANSPORT OR DISPOSE 10,000# ANNUALLY OF ANY OF THE HAZARDOUS CHEMICALS CONTAINED IN THE ENVIRONMENTAL PROTECTION AGENCY'S CONSOLIDATED LIST OF CHEMICALS SUBJECT TO REPORTING UNDER TITLE III SUPER AMENDMENTS AND REAUTHORIZATION ACT (SARA) OF 1986.

BARRETT RESOURCES CORP. GUARANTEES THAT DURING THE DRILLING AND COMPLETION OF THE ABOVE REFERENCED WELLS, WE WILL USE, PRODUCE, STORE, TRANSPORT, OR DISPOSE LESS THAN THE THRESHOLD PLANNING QUANTITY(TPQ) OF ANY EXTREMELY HAZARDOUS SUBSTANCES AS DEFINED IN 40 CFR 355.

TEN POINT PLAN

BARRETT RESOURCES CORPORATION
UTE TRIBAL 1-26
SURFACE LOCATION NE 1/4, NE 1/4, 500 FNL 468 FWL, SECTION 26, T. 5 S., R. 5 W.

1. SURFACE FORMATION:

UINTAH

2. ESTIMATED FORMATION TOPS AND DATUM:

FORMATION	DEPTH
Uintah	Surface
Green River	1135'
Mahogany	2350'
Tgr3	3393'
Douglas Creek	4164'
Castle Peak	5086'
Uteland Butte Ls	5494'
TD	5650' TD

3. PRODUCING FORMATION DEPTH:

FORMATION OBJECTIVE INCLUDE THE GREEN RIVER AND ITS SUBMEMBERS.

OFF SET WELLS:	UTE TRIBAL 3-26	SEC 26, T5S,R5W
	UTE TRIBAL 15-23	SEC 23, T5S, R5W

4. PROPOSED CASING:

HOLE SIZE	CASING	WEIGHT/FT.	GRADE & THREAD	SET @	CASING
12 1/2	8 5/8	24	J-55/STC	280	NEW/USED
7 7/8	5 1/2	15.5	J-55/ LTC	5650'TD	NEW/USED

CEMENT PROGRAM:	SURFACE CASING	CEMENT	CEMENT AMOUNT
8 5/8		CLASS G	150 SKS +20 %
	CASING		
5 1/2	FLUID 1 LEAD CMT	FLUID WT.	11.00 LB/GAL
	HIFILL STANDARD	FLUID YIELD	3.81 FT3/ SKS
	1% ECONOLITE (EXTENDER)	FLUID WATER RATIO	22.91 GAL/SKS
	.25 LB/SK FLOCELE (LOST CIRC.)	TOTAL MIXING FLUID	47.6 BBLS
	10 LB/SK GILSONITE (LOST CIRC.)	APPROX. TOP FLUID	2000 FT
	16 % HALLIBURTON GEL(EXTENDER)	CALCULATED FILL	1,393 FT
	3 % SALT (3%) (ACCELERATOR)	FLUID VOLUME	57.44 BBLS
	.2 % HR-7 RETARDER	CALCULATED VOLUME	76.03 SKS.
	MIXED W/ FRESH WATER	PROPOSED VOLUME	77 SKS

5 1/2 FLUID 2 TAIL CMT 50:50 POZ	FLUID WT.	13.4 LB/GAL
.2 % FWCA	FLUID YIELD	1.49 FT3/SKS
.2% HALAD 322	FLUID WATER RATIO	7.27 GAL/SKS
2 % HALLIBURTON GEL	TOTAL MIX FLUID	55 BBLS
3% KCL (BWOW)	APPROX. TOP FLUID	3600
3 LB/SK SILICALITE	CALC. FILL	2257
1 LB/SK GRANULITE	FLUID VOLUME	81.33 BBLS
	CALC. VOLUME	315 SKS
	PROPOSED VOLUME	315 SKS

5. BOP AND PRESSURE CONTAINMENT DATA:

THE ANTICIPATED BOTTOM HOLE PRESSURE WILL BE LESS THAN 3000 PSI.

A 3000 PSI WP BOP SYSTEM AS DESCRIBED IN THE BOP AND PRESSURE CONTAINMENT DATA (ATTACHED) WILL BE INSTALLED AND MAINTAINED FROM THE 8 5/8 SURFACE CASING. THE BOP SYSTEM INCLUDING THE CASING WILL BE PRESSURE TESTED TO THE MINIMUM STANDARDS SET FORTH IN " ON SHORE ORDER #2". THE BOP WILL BE MECHANICALLY CHECKED DAILY DURING DRILLING OPERATION.

6. MUD PROGRAM:

INTERVAL	MUD WT. LBS/GAL	VISCOSITY SEC./QT.	FLUID LOSS MI/30 MINS	MUD TYPE
0-280	AIR/ CLEAR WATER	----------	NO CONTROL	WATER/GEL
280-2000	CLEAR WATER	----------	NO CONTROL	WATER/GEL
2000-TD	8.4 - 8.6	30	NO CONTROL	5 % KCL

7. AUXILIARY EQUIPMENT:

UPPER KELLY COCK, FULL OPENING STABBING VALVE, 2 1/2 CHOKE MANIFOLD AND PIT LEVEL INDICATOR.

8.TESTING, CORING, SAMPLING, AND LOGGING:

A) TEST: NONE ARE ANTICIPATED

B) CORING: THERE IS THE POSSIBILITY OF SIDEWALL CORING.

C) SAMPLING: EVERY 10 FT FROM 2000 ' TO TD.

D) LOGGING:

TYPE	INTERVAL
DLL/SFL W/GR AND SP	TD TO SURFACE CASING
FDC/CNL W/GR AND CAL	TD TO SURFACE CASING

9. ABNORMALITIES (INCLUDING SOUR GAS):

NO ABNORMAL PRESSURES OR TEMPERATURES OR OTHER HAZARDS ARE ANTICIPATED. OIL AND GAS SHOWS ARE ANTICIPATED IN THE GREEN RIVER FORMATION. OTHER WELLS IN THE AREA HAVE NOT ENCOUNTERED OVER- PRESSURED ZONES OR H2S.

10. DRILLING SCHEDULE:

THE ANTICIPATED STARTING DATE IS JULY 15 , 1997. DURATION OF OPERATIONS IS EXPECTED TO BE 150 DAYS.

BARRETT RESOURCES CORPORATION

13 POINT SURFACE USE PLAN

FOR

WELL LOCATION

UTE TRIBAL 1-26

LOCATED IN

NE 1/4, NE 1/4, 500FNL 468 FWL

SECTION 26, T 5 S. , R 5 W., U.S.B.M.

DUCHESNE COUNTY, UTAH

LEASE NUMBER: BIA 14-20-H62-3444

SURFACE OWNERSHIP: UTE TRIBE

1. EXISTING ROADS

TO REACH THE BARRETT RESOURCES WELL, UTE TRIBAL 1-26 LOCATION, IN SECTION 26, T5S., R5W.

START IN MYTON, UTAH. PROCEED WEST ON US HIGHWAY 40, 8.8 MILES TO THE ANTILOPE CANYON ROAD. TURN SOUTH AND PROCEED 6.3 MILES TO THE SOWERS CANYON ROAD. TURN RIGHT ON THE SOWERS CANYON ROAD AND PROCEED SOUTH AND WEST 7.9 MILES. TURN SOUTH AND NORTH EAST ON AN OILFIELD ACCESS ROAD AND PROCEED 0.5 MILES. TURN EAST AND PROCEED 0.3 MILE. TURN SOUTH AND PROCEED O.6 MILE TO LOCATION.

THE EXISTING OILFIELD SERVICE ROAD MAY NEED SOME SURFACE MATERIAL TO PREVENT OR REPAIR HOLES IN THE ROAD DUE TO HEAVY TRUCK TRAFFIC DURING THE DRILLING AND COMPLETION OPERATION. IF REPAIRS ARE MADE THE OPERATOR WILL SECURE MATERIAL FROM PRIVATE SOURCES.

PLEASE SEE THE ATTACHED MAP FOR ADDITIONAL DETAILS.

2. PLANNED ACCESS ROAD

APPROXIMATELY 2514 FEET OF NEW ROAD WILL BE REQUIRED.
DETAILS OF THE CONSTRUCTION ARE AS FOLLOWS;
LENGTH- 2514 FT (APPROX)
WIDTH- 32 FT(APPROX)
GRADE- 10% OR LESS

PLEASE SEE THE ATTACHED LOCATION PLAT FOR ADDITIONAL DETAILS.

NO RIGHT OF WAY WILL BE REQUIRED. ALL NEW CONSTRUCTION WILL BE CONDUCTED ON LEASE.

ALL TRAVEL WILL BE CONFINED TO EXISTING ROAD RIGHT OF WAYS. ACCESS ROADS AND SURFACE DISTURBING ACTIVITIES WILL CONFORM TO STANDARDS OUTLINED IN THE USGS PUBLICATION (1978) SURFACE OPERATION STANDARDS FOR OIL AND GAS DEVELOPEMENT.

3. LOCATION OF EXISTING WELLS

THE FOLLOWING WELLS ARE LOCATED WITHIN ONE MILE RADIUS OF THE LOCATION SITE.

A) PRODUCING WELLS:

OIL WELL	UTE TRIBAL 3-26	SECTION 26, T.5S, R5W
OIL WELL	UTE TRIBAL 15-23	SECTION 23, T.5 S, R.5W.
OIL WELL	UTE TRIBAL 9-23	SECTION 23, T.5 S, R.5W.
OIL WELL	UTE TRIBAL 7-25	SECTION 25, T.5 S, R.5W.

B) WATER WELLS: NONE

C) ABANDONED WELLS : NONE

D) TEMPORARILY ABANDONED WELLS: NONE

E) DISPOSAL WELLS: NONE

F) DRILLING WELLS: NONE

G) SHUT IN WELLS: NONE

H) INJECTION WELLS: NONE

I) MONITORING OR OBSERVATION WELLS: NONE

PLEASE SEE ATTACHED MAP FOR ADDITIONAL DETAILS.

4. LOCATION OF TANK BATTERIES, PRODUCTION FACILITIES, AND PRODUCTION GATHERING AND SERVICE LINES

ALL PRODUCTION FACILITIES ARE TO BE CONTAINED WITHIN THE PROPOSED LOCATION SITE. PLEASE SEE THE ATTACHED PLOT PLAN FOR A TYPICAL PUMP JACK, SEPERATOR INSTALL, AND WELLSITE PIPING CONNECTION.

ALL PERMANENT(ON SITE FOR SIX MONTHS OR LONGER) STRUCTURES CONSTRUCTED OR INSTALLED WILL BE PAINTED A DESERT BROWN COLOR. ALL FACILITIES WILL BE PAINTED WITHIN SIX MONTHS OF INSTALLATION. FACILITIES REQUIRED TO COMPLY WITH O.S.H.A. (OCCUPATIONAL SAFETY AND HELATH ACT) WILL BE EXCLUDED. THE REQUIRED PAINT COLOR IS DESERT BROWN(10 YR 6/4)

THE TANK BATTERY WILL BE SURROUNDED BY A DIKE OF SUFFUCIENT CAPACITY TO CONTAIN THE STORAGE CAPACITY OF THE LARGEST TANK IN THE BATTERY. THE INTEGRITY OF THE DIKE WILL BE MAINTAINED.

ALL SITE SECURITY GUIDELINES IDENTIFIED IN 43 CFR 3126.7 REGULATION WILL BE ADHERED TO.

AL OFF LEASE STORAGE, OFF-LEASE MEASUREMENT, OR COMMINGLING ON LEASE OR OFF-LEASE WILL HAVE PRIOR WRITTEN APPROVAL FROM THE AUTHORIZED OFFICER.

THE GAS LINE HAS BEEN STAKED ON THE GROUND. THERE WILL BE NO ADDITIONAL SURFACE DISTUBANCES REQUIRED FOR THE INSTALLATION OF A GATHERING LINE.

GAS METER RUNS WILL BE LOCATED WITHIN 100 FT OF THE WELL HEAD. THE GAS LINE WILL BE BURIED, OR ANCHORED DOWN FROM THE WELLHEAD TO THE METER. METER RUNS WILL BE HOUSED AND/OR FENCED.

THE GAS METER WILL BE CALIBRATED AND THE TANK STRAPPED IN PLACE PRIOR TO ANY DELIVERIES. TESTS FOR THE METER ACCURACY WILL BE CONDUCTED MONTHLY FOR THE FIRST THREE MONTHS ON NEW METER INSTALLATIONS AND AT LEAST QUARTERLY THEREAFTER. THE AUTHORIZED OFFICER WILL BE PROVIDED WITH A DATE AND TIME FOR THE INITIAL METER CALIBRATION AND ALL FUTURE METER PROVING SCHEDULES. A COPY OF THE METER CALIBRATION REPORT WILL BE SUBMITTED TO THE VERNAL DISTRICT OFFICE. ALL MEASUREMENT

FACILITIES WILL CONFORM WITH API AND AGA STANDARDS FOR GAS AND LIQUID HYDROCARBON MEASUREMENT.

5. LOCATION AND TYPE OF WATER SUPPLY

WATER FOR THE WELL WILL BE HAULED BY TRUCK FROM JIM NEBEKER'S (JOE SHIELDS) POND. WATER FOR COMPLETION WILL COME FROM THE SAME PONDS OR FROM ROOSEVELT CITY. A WATERN WELL IS PLANNED FOR USE IN THIS AREA. A WATER USE AGREEMENT IS ALSO IN PLACE WITH UTE TRIBE.

6. SOURCE OF CONSTRUCTION MATERIALS

ALL CONSTRUCTION MATERIAL FOR THIS LOCATION SITE AND ACCESS ROAD SHALL BE BORROW MATERIAL ACCUMULATED DURING CONSTRUCTION OF THE LOCATION SITE AND ACCESS ROAD. ADDITIONAL GRAVEL OR PIT LINING MATERIAL WILL BE OBTAINED FROM PRIVATE SOURCES.

7. METHODS FOR HANDLING WASTE DISPOSAL

A) PIT CONSTRUCTION AND LINERS:

THE RESERVE PIT WILL BE APPROX. 10 FT DEEP AND AT LEAST ONE-HALF OF THE DEPTH SHALL BE BELOW THE SURFACE OF THE EXISTING GROUND.

THE RESERVE PIT WILL BE LINED WITH A 12 MIL PIT LINER. THE PIT LINER WILL BE TORN AND PERFORATED AFTER THE PUT DRIES AND BEFORE BACKFILLING THE RESERVE PIT. THE RESERVE PIT WILL BE REASONABLY FREE OF HYDROCARBONS BEFORE THE PIT IS BACKFILLED.

ONE-HALF OF THE PIT WILL BE USED AS A FRESH WATER STORAGE AREA DURING THE DRILLING OF THIS WELL AND THE OTHER ONE-HALF WILL BE USED TO STORE NON-FLAMABLE MATERIALS SUCH AS CUTTINGS, SALT, DRILLING FLUIDS, CHEMICALS, PRODUCED FLUIDS, ETC.

B) PRODUCED FLUIDS:

PRODUCED WATER WILL BE CONFINED TO THE RESERVE PIT, OR IF DEEMED NECESSARY, A STORAGE TANK FOR A PERIOD NOT TO EXCEED 90 DAYS AFTER INITIAL PRODUCTION. DURING THE 90 DAY PERIOD AN APPLICATION FOR APPROVAL FOR A PERMANENT DISPOSAL METHOD AND LOCATION WILL BE SUBMITTED TO THE AUTHORIZED OFFICER.

C) GARBAGE:

A TRASH CAGE, FABRICATED FROM EXPANDED METAL WILL BE USED TO HOLD TRASH ON LOCATION AND WILL BE REMOVED TO AN AUTHORIZED LANDFILL LOCATION.

D) A PORTABLE CHEMICAL TOILET WILL BE SUPPLIED FOR HUMAN WASTE.

E) SITE CLEAN-UP:

AFTER THE RIG IS MOVED OUT, THE AREA AROUND THE WELLSITE WILL BE CLEANED AND ALL REFUSE REMOVED.

8. ANCILLARY FACILITIES

THERE ARE NO ANCILLARY FACILITIES PLANNED FOR AT THIS TIME AND NONE ARE FORESEEN IN THE FUTURE.

9. WELLSITE LAYOUT

LOCATION DIMENSION ARE AS FOLLOW:

A) PAD LENGTH-	300 FT
B) PAD WIDTH-	140 FT
C) PIT DEPTH-	10 FT
D) PIT LEGTH-	180 FT
E) PIT WIDTH-	70 FT
F) MAX CUT-	24.9 FT
G) MAX FILL-	17.9 FT
H) TOTAL CUT YARDS-	16,210 CU YDS
I) PIT LOCATION-	NORTH EAST CORNER
J) TOP SOIL LOCATION-	NORTH WEST SIDE OF LOCATION
K) ACCESS ROAD LOCATION-	FROM THE NORTH
L) FLARE PIT-	ON THE SOUTH EAST CORNER

PLEASE SEE THE ATTACHED LOCATION DIAGRAM FOR ADDITIONAL DETAILS.

ALL PITS WILL BE FENCED ACCORDING TO THE FOLLOWING STANDARDS:

A) 39 INCH NET WIRE SHALL BE USED WITH AT LEAST ONE STRAND OF WIRE ON TOP OF THE NET WIRE

(BARBED WIRE IS NOT NECESSARY IF PIPE OR SOME TYPE OF REINFORCEMENT ROD IS ATTACHED TO THE TOP OF THE ENTIRE FENCE.)

B) THE NET WIRE SHALL BE NO MORE THAN 2 INCHES ABOVE THE GROUND. THE BARBED WIRE SHALL BE 3 INCHES ABOVE THE NET WIRE. TOTAL HEIGHT OF THE FENCE SHALL BE AT LEAST 42 INCHES.

C) CORNER POSTS SHALL BE CEMENTED AND/OR BRACED IN SUCH A MANNER TO KEEP THE FENCE TIGHT AT ALL TIMES.

D) STANDARD STEEL, WOOD OR PIPE POSTS SHALL BE USED BETWEEN THE CORNER BRACES. DISTANCE BETWEEN ANY TWO POSTS SHALL BE NO GREATER THAN 16 FT.

E) ALL WIRE SHALL BE STRETCHED, BY USING A STRETCHING DEVICE, BEFORE IT IS ATTACHED TO THE CORNER POSTS.

10. PLANS FOR RESTORATION OF THE SURFACE

PRIOR TO THE CONSTRUCTION OF THE LOCATION, THE TOP 12 INCHES OF SOIL MATERIAL WILL BE STRIPPED AND STOCKPILED. THIS WILL AMOUNT TO 2,020 CUBIC YARDS OF MATERIAL. PLACEMENT OF THE TOP SOIL IS NOTED ON THE ATTACHED LOCATION PLAT. WHEN ALL DRILLING AND COMPLETION ACTIVITIES HAVE BEEN COMPLETED THE UNUSED PORTION OF THE LOCATION(THE AREA OUTSIDE THE DEADMEN) WILL BE RECONTOURED AND THE TOPSOIL SPREAD OVER THE AREA.

THE DIRT CONTRACTOR WILL BE PROVIDED WITH AN APPROVED COPY OF THE SURFACE USE PLAN PRIOR TO CONSTRUCTION ACTIVITIES.

ANY DRAINAGE REROUTED DURING THE CONSTRUCTION ACTIVITIES SHALL BE RESTORED TO ITS ORIGINAL LINE OF FLOW OR AS NEAR AS POSSIBLE.

ALL DISTURBED AREAS WILL BE RECONTOURED TO THE APPROXIMATE NATURAL CONTOURS. PRIOR TO BACKFILLING THE PIT, THE FENCES AROUND THE RESERVE PIT WILL BE REMOVED. THE PIT LINER WILL BE CUT OFF AT THE WATER OR MUD LINE AND DISPOSED OF AT AN APPROVED LANDFILL SITE. THE LINER WILL ALSO BE TORN AND PERFORATED AFTER THE PIT DRIES AND BEFORE BACKFILLING OF THE RESERVE PIT.

THE RESERVE PIT WILL BE RECLAIMED WITHIN 90 DAYS OF WELL COMPLETION. IF THE RESERVE PIT HAS NOT DRIED SUFFICIENTLY TO ALLOW BACKFILLING AN EXTENSION ON THE TIME REQUIREMENT FOR BACKFILLLING THE PIT WILL BE REQUESTED. ONCE RECLAIMATION ACTIVITIES HAVE BEGUN, THEY SHALL BE COMPLETED WITHIN 30 DAYS.

AFTER THE RESERVE PIT HAS BEEN RECLAIMED NO DEPRESSIONS IN THE SOIL COVERING THE RESERVE PIT WILL BE ALLOWED. THE OBJECTIVE IS TO KEEP SEASONAL RAINFALL AND RUN OFF FROM SEEPING INTO THE SOIL USED TO COVER THE RESERVE PIT. DIVERSION DITCHES AND WATER BARS WILL BE USED TO DIVERT RUN OFF AS NEEDED.

WHEN RESTORATION ACTIVITIES HAVE BEEN COMPLETED, THE LOCATION SITE AND NEW ACCESS ROAD CUTS AND SHOULDERS SHALL BE RESEEDED. PRIOR TO RESEEDING, ALL DISTURBED AREAS, INCLUDING THE OLD ACCESS ROAD, WILL BE SCARIFIED AND LEFT WITH A ROUGH SURFACE.

A) RECOMMENDED SEED MIXTURE:
RUSSION RYE 6# PER ACRE. FAIRWAY CRESTED WHEAT GRASS 6# PER ACRE.

B) SEEDING DATES:

AFTER SEPTEMBER 15, AND BEFORE THE GROUND FREEZES.

SEED WILL BE BROADCAST OR DRILLED AT THE TIME SPECIFIED BY THE BLM. IF BROADCAST, A HARROW OR SOME OTHER IMPLEMENT WILL BE DRAGGED OVER THE SEEDED AREA TO ASSURE SEED COVERAGE AND THE SEED MIXTURE WILL BE PROPORTIONATELY LARGER(DOUBLE THE LBS. PER ACRE).

AT SUCH TIME THE WELL IS PLUGGED AND ABANDONED THE OPERATOR WILL SUBMIT A SURFACE RECLAIMATION PLAN TO THE SURFACE MANAGEMENT AGENCY FOR PRESCRIBED SEED MIXTURE AND RESEEDING REQUIREMENTS.

11. SURFACE OWNERSHIP: THE UTE TRIBE

12. OTHER INFORMATION

A) VEGETATION:

THE TREES IN THE AREA ARE CEDAR AND PINION. THE VEGITATION COVERAGE IS SLIGHT. THE MAJORITY OF THE EXISTING VEGETATION IS MADE UP OF RABBIT, SAGE, AND BITTER BRUSH. ALSO FOUND ON THE LOCATION IS PRICKLY PEAR, INDIAN RICE GRASS, AND YUCCA.

B) DWELLINGS:

THERE ARE NO OCCUPIED DWELLINGS, OR OTHER FACILITIES WITHIN A ONE MILE RADIUS OF THIS LOCATION.

C) ARCHAELOGY:

THE LOCATION HAS BEEN SURVEYED AND THERE IS NO ARCHAEOLOGICAL, HISTORICAL, OR CULTURAL SITES NEAR THE PROPOSED SITE. PLEASE SEE THE ATTACHED ARCHAEOLOGICAL CLEARANCE MAP.

IF, DURING OPERATIONS, ANY ARCHAEOLOGICAL OR HISTORICAL SITES, OR ANY OBJECTS OF ANTIQUITY
(SUBJECT TO THE ANTIQUITIES ACT OF JUNE 8, 1906) ARE DISCOVERED, ALL OPERATIONS WHICH WOULD AFFECT SUCH SITES ARE TO BE SUSPENDED AND THE DISCOVERY REPORTED PROMPTLY TO THE SURFACE MANAGEMENT AGENCY.

D) WATER:

THE NEAREST WATER IS IN THE BOTTOM OF SOWERS CANYON .7 MILES TO THE WEST.

E) WOOD:

NO WOOD PERMIT WILL BE REQUIRED FOR THIS LOCATION. BARRETT RESOURCES HAS A JOINT VENTURE AGREEMENT WITH THE UTE TRIBE. THIS AGREEMENT MAKES IT UNNECESSARY FOR BARRETT RESOURCES TO OBTAIN A WOOD PERMIT. PLEASE SEE THE JOINT VENTURE AGREEMENT, BETWEEN ZINKE & TRUMBO LTD. WHICH HAS BEEN ASSIGNED TO BARRETT RESOURCES, IF YOU REQUIRE ADDITIONAL INFORMATION.

F) CHEMICALS:

NO PESTICIDES, HERBICIDES OR OTHER POSSIBLE HAZARDOUS CHEMICALS SHALL BE USED WITHOUT PRIOR APPLICATION.

G) NOTIFICATION:

a) BLM, VERNAL, UT. STAN OLMSTEAD 801-789-1362, 24 TO 48 HRS BEFORE CONSTRUCTION OF THE LOCATION. ALSO AFTER SITE CONSTRUCTION AND BEFORE THE RIG MOVES IN.

b) BIA, FT. DUCHESNE, UT, CHARLIE CAMERON 801-722-2406, 24 TO 48 HRS BEFORE CONSTRUCTION OF THE LOCATION. ALSO AFTER SITE CONSTRUCTION AND BEFORE THE RIG MOVES IN.

c) UTE TRIBE, MINERALS DIVISION, FT. DUCHESNE, UT, FERRON SECAKUKU 801-722-4992, 24 TO 48 HRS BEFORE CONSTRUCTION AND BEFORE THE RIG MOVES IN.

H) FLARE PIT:

THE FLAIR PIT WILL BE LOCATED 120 FEET FROM THE RESERVE PIT FENCE AND 130 FEET FROM THE BORE HOLE ON THE SOUTH AND EAST SIDE OF THE LOCATION, BETWEEN POINTS 5 AND 6 ON THE LOCATION PLAT. ALL FLUIDS WILL BE REMOVED FROM THE PIT WITHIN 48 HOURS OF OCCURANCE.

I) GRAZING PERMITTEE:

UTE TRIBAL LIVESTOCK ENTERPRIZES
FT. DUCHESNE, UT
801-722-2406

13. LESSEES OR OPERATORS REPRESENTATIVE AND CERTIFICATION

A) REPRESENTATIVE

NAME: DOUG BARONE

ADDRESS: BARRETT RESOURCES CORP. BOX 290
NEOLA,UT 84053

PHONE: 801-353-4625
CELLULAR: 801-828-6116

ALL LEASE AND/OR UNIT OIPERATIONS WILL BE CONDUCTED IN SUCH A MANNER THAT FULL COMPLIANCE IS MADE WITH ALL APPLICABLE LAWS, REGULATIONS, ONSHORE OIL AND GAS ORDERS. THE APPLICABLE LAWS, REGULATIONS, AND ANY APPLICALBLE NOTICES TO LESSEES. THE OPERATOR IS FULLY RESPONSIBLE FOR THE ACTIONS OF HIS SUBCONTRACTORS. A COPY OF THESE CONDITIONS WILL BE FURNISHED TO THE FIELD REPRESENTATIVE TO ENSURE COMPLIANCE.

THE DRILLING PERMIT WILL BE VALID FOR A PERIOD OF ONE YEAR FROM THE DATE OF APPROVAL. AFTER PERMIT TERMINATION, A NEW APPLICATION WILL BE FILED FOR APPROVAL FOR ANY FUTURE OPERATIONS.

B) CERTIFICATION:

I HEREBY CERTIFY THAT I, OR PERSONS UNDER MY DIRECT SUPERVISION, HAVE INSPECTED THE PROPOSED DRILLSITE AND ACCESS ROUTE; THAT I AM FAMILIAR WITH THE CONDITIONS WHICH PRESENTLY EXIST; THAT THE STATEMENTS MADE IN THIS PLAN ARE, TO THE BEST OF MY KNOWLEDGE AND BELIEF, TRUE AND CORRECT; AND THAT THE WORK ASSOCIATED WITH THE OPERATION PROPOSED HEREIN WILL BE PERFORMED BY BARRETT RESOURCES AND ITS CONTRACTORS AND SUBCONTRACTORS IN CONFORMITY WITH THIS PLAN AND TERMS AND CONDITIONS WITH THE PLAN AND THE TERMS AND CONDITIONS UNDER WHICH IT IS APPROVED.

DATE 6-24-97

Doug Barone
Production Supervisor
Barrett Resources Corp.

BARRETT RESOURCES CORPORATION

LOCATION LAYOUT FOR

UTE TRIBAL #1-26
SECTION 26, T5S, R5W, U.S.B.&M.
500' FNL 468' FEL

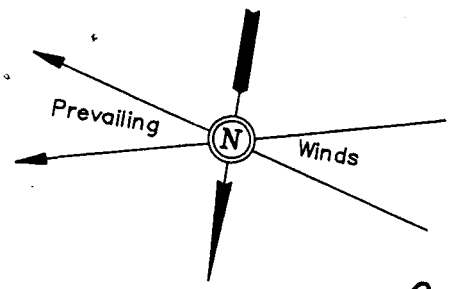

SCALE: 1" = 50'
DATE: 06-04-97
DRAWN BY: D.R.B.

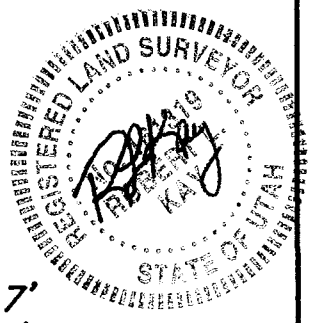

C-12.2'
El. 41.4'

C-7.7'
El. 36.9'

F-1.7'
El. 27.5'

Topsoil Stockpile

Sta. 3+00

Flare Pit

Approx. Top of Cut Slope

NOTE:
Flare Pit is to be located a min. of 100' from the Well Head.

DATA

150'

Round Corners as Needed

Approx. Toe of Fill Slope

CATWALK

C-6.7'
El. 35.9'

C-24.9'
El. 44.1'
(Btm.Pit)

PIPE RACKS

C-2.5'
El. 31.7'

70'

30'

40'

RIG

DOG HOUSE

100'

Sta. 1+50

F-17.9'
El. 11.3'

Pit Capacity With 2' of Freeboard is ± 12,070 Bbls.

MUD TANKS

150'

WATER

TRAILER

PUMP

MUD SHED

TOILET

HOPPER

FUEL

POWER

TOOLS

FUEL

STORAGE TANK

10' WIDE BENCH

180'

RESERVE PITS (10' Deep)

1 1/2:1 Slope

Reserve Pit Backfill & Spoils Stockpile

Sta. 0+15

TRASH

Sta. 0+00

C-23.1'
El. 42.3'
(Btm. Pit)

C-8.4'
El. 37.6'

C-5.9'
El. 35.1'

Topsoil Stockpile

F-1.8'
El. 27.4'

Proposed Access Road

Elev. Ungraded Ground at Location Stake = 6731.7'

Elev. Graded Ground at Location Stake = 6729.2'

UINTAH ENGINEERING & LAND SURVEYING
85 So. 200 East • Vernal, Utah 84078 • (801) 789-1017

BARRETT RESOURCES CORPORATION

TYPICAL CROSS SECTIONS FOR

UTE TRIBAL #1-26
SECTION 26, T5S, R5W, U.S.B.&M.
500' FNL 468' FEL

1" = 20'
X-Section Scale
1" = 50'

DATE: 06-04-97
DRAWN BY: D.R.B.

NOTE:
Topsoil should not be Stripped Below Finished Grade on Substructure Area.

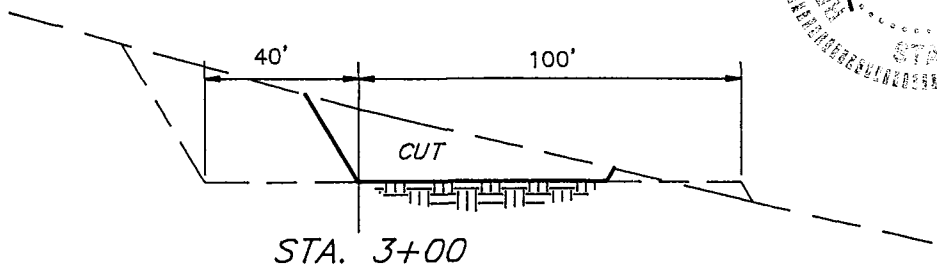

STA. 3+00

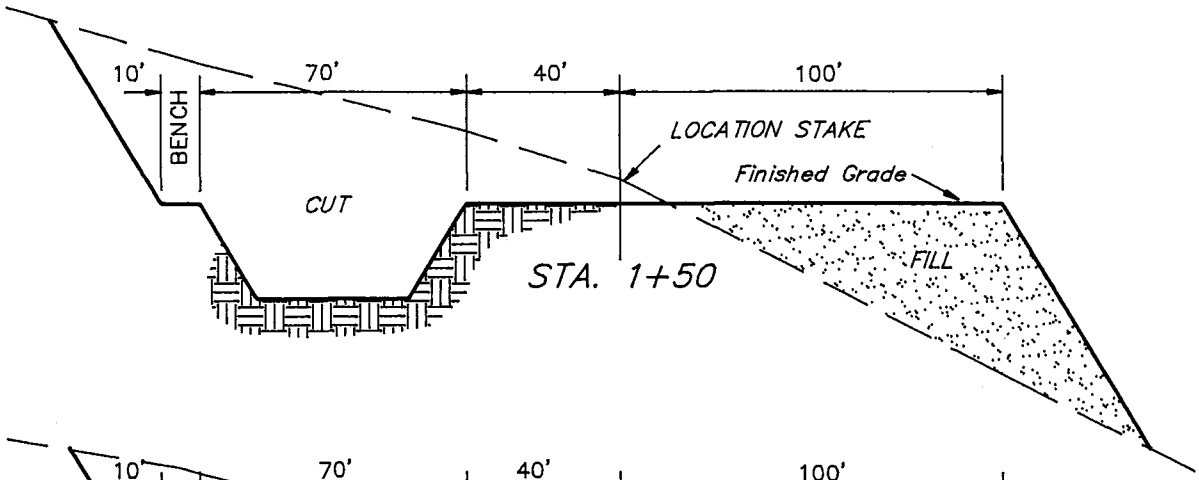

STA. 1+50

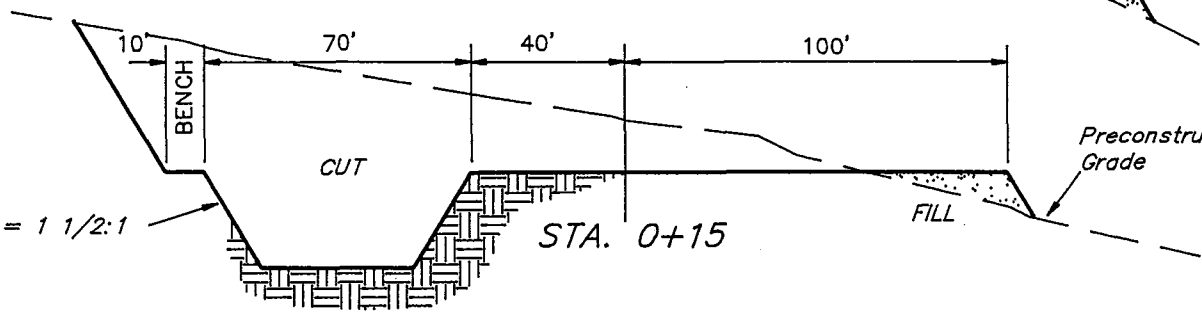

STA. 0+15

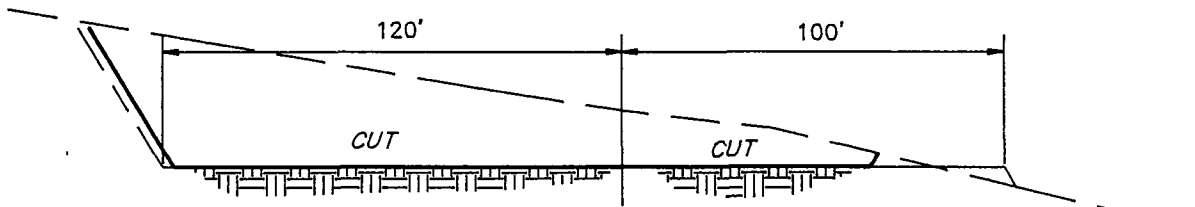

STA. 0+00

APPROXIMATE YARDAGES

CUT

(12") Topsoil Stripping	= 2,020 Cu. Yds.
Remaining Location	= 14,190 Cu. Yds.
TOTAL CUT	= 16,210 CU.YDS.
FILL	= 6,010 CU.YDS.

EXCESS MATERIAL AFTER 5% COMPACTION	= 9,880 Cu. Yds.
Topsoil & Pit Backfill (1/2 Pit Vol.)	= 3,710 Cu. Yds.
EXCESS UNBALANCE (After Rehabilitation)	= 6,170 Cu. Yds.

UINTAH ENGINEERING & LAND SURVEYING
85 So. 200 East • Vernal, Utah 84078 • (801) 789-1017

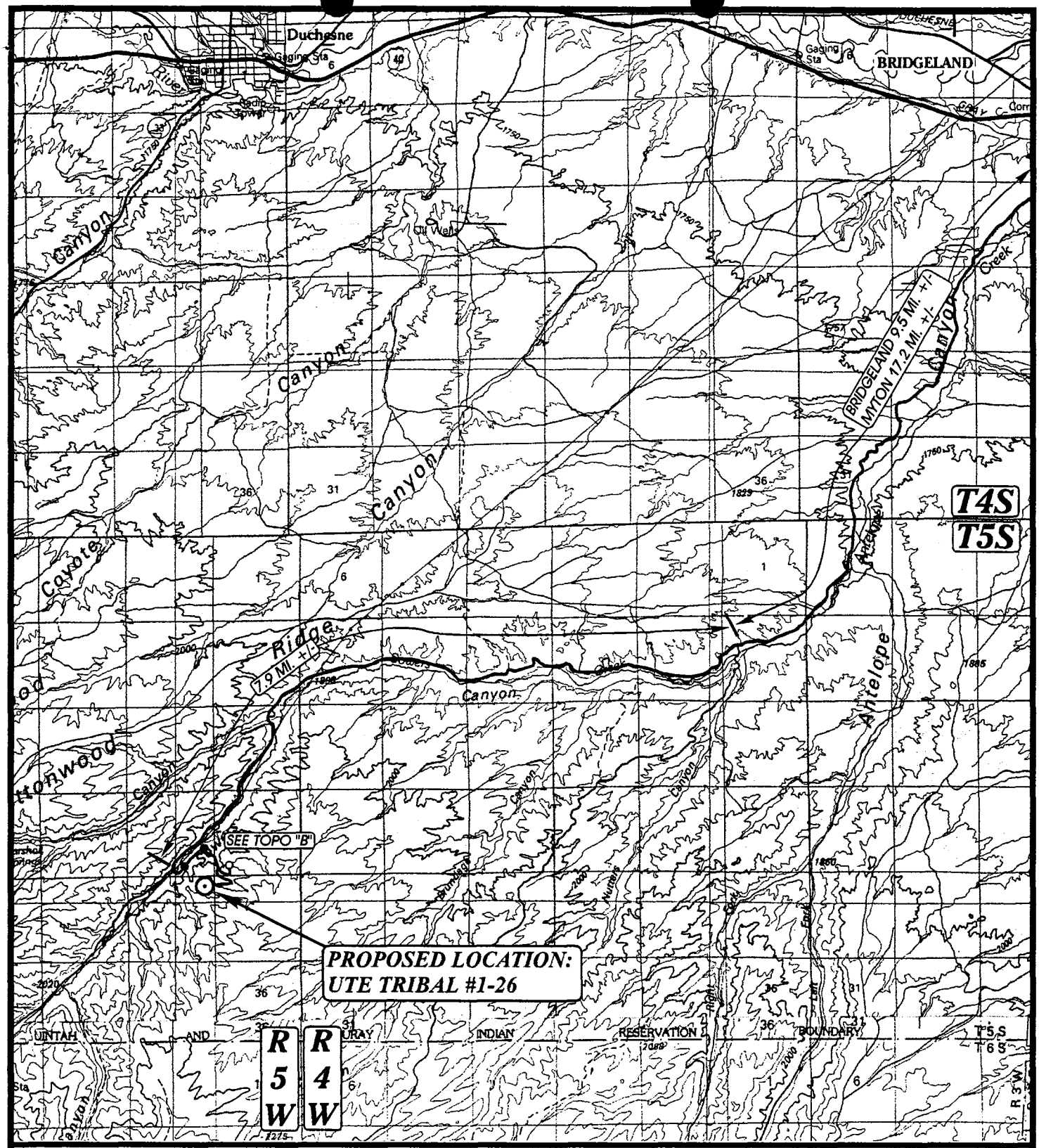

LEGEND:

⊙ PROPOSED LOCATION

N

BARRETT RESOURCES CORPORATION

UTE TRIBAL #1-26
SECTION 26, T5S, R5W, U.S.B.&M.
500' FNL 468' FEL

Uintah Engineering & Land Surveying
85 South 200 East Vernal, Utah 84078
(801) 789-1017 * FAX (801) 789-1018
Email: uels@easilink.com

TOPOGRAPHIC MAP	6 MONTH	4 DAY	97 YEAR
SCALE: 1 : 100,000	DRAWN BY: D.COX	REVISED: 00-00-00	A TOPO

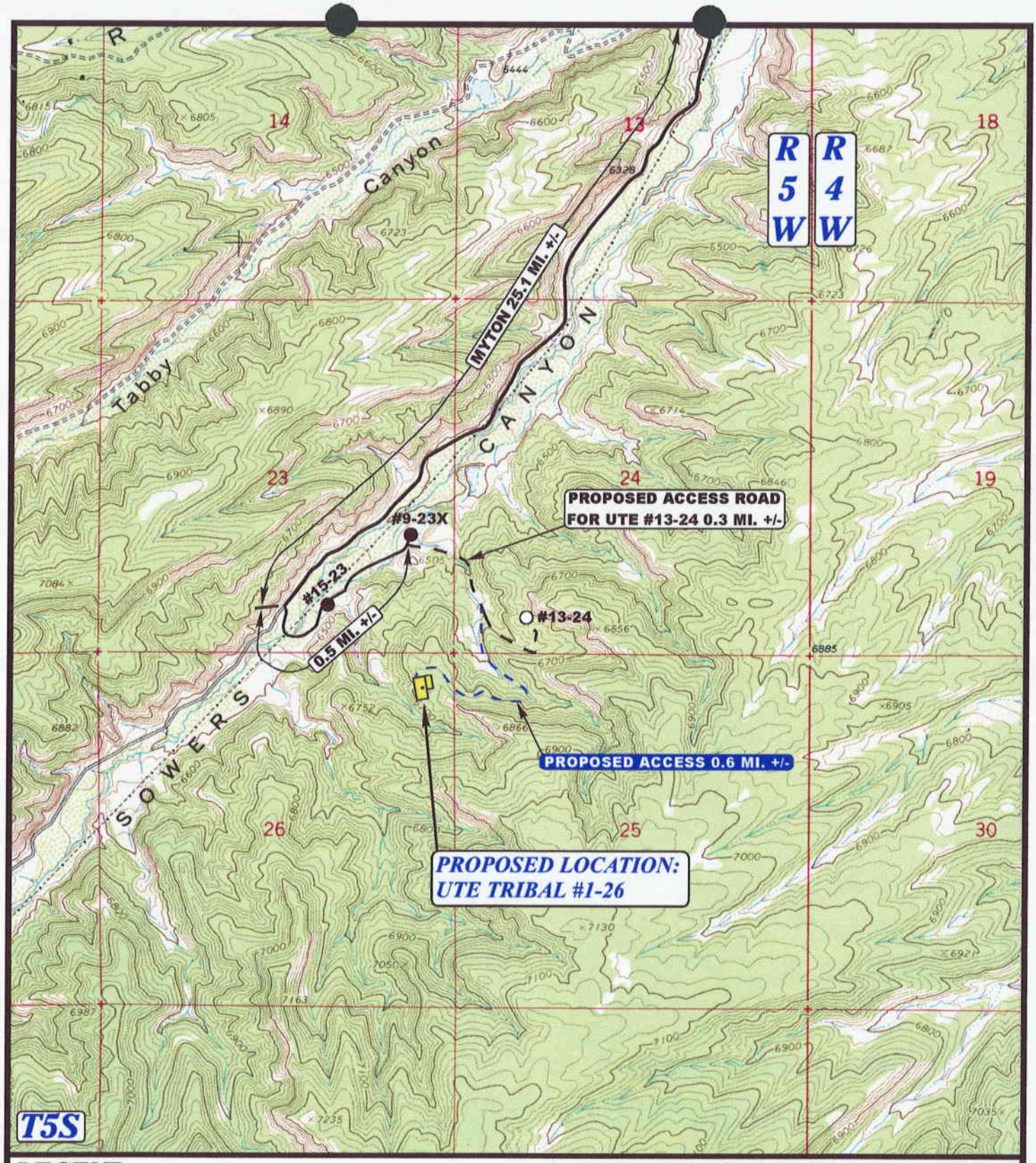

LEGEND:

PROPOSED ACCESS ROAD

EXISTING ROAD

N

BARRETT RESOURCES CORPORATION

UTE TRIBAL #1-26

SECTION 26, T5S, R5W, U.S.B.&M.

500' FNL 468' FEL

Uintah Engineering & Land Surveying
85 South 200 East Vernal, Utah 84078
(801) 789-1017 * FAX (801) 789-1018
Email: uels@easilink.com

TOPOGRAPHIC MAP	6 MONTH	4 DAY	97 YEAR	B TOPO
SCALE: 1" = 2000'	DRAWN BY: D.COX	REVISED: 00-00-00		

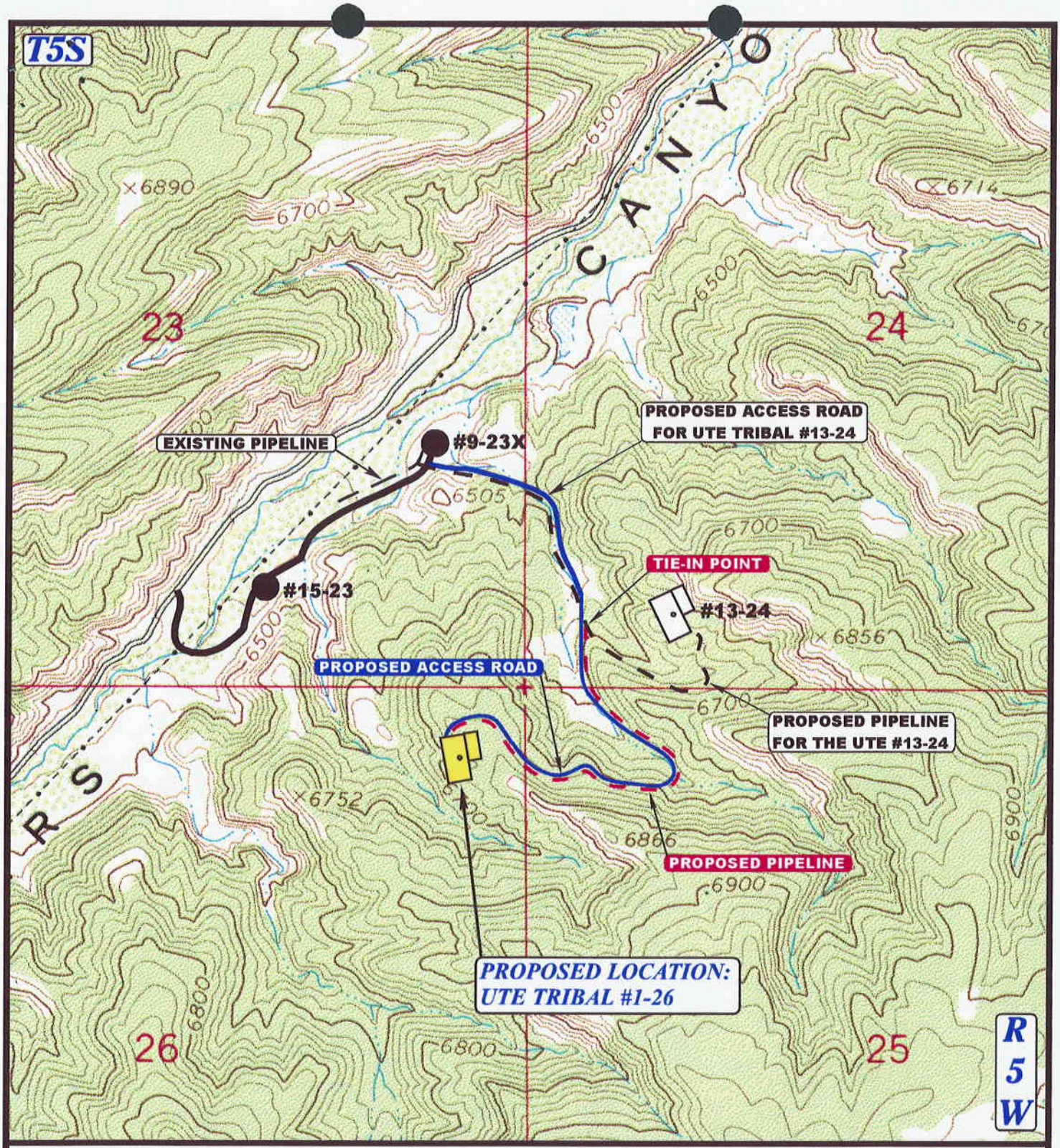

APPROXIMATE TOTAL PIPELINE DISTANCE = 3070' +/-

LEGEND:

EXISTING PIPELINE

PROPOSED PIPELINE

PROPOSED ACCESS

N

BARRETT RESOURCES CORPORATION

UTE TRIBAL #1-26
SECTION 26, T5S, R5W, U.S.B.&M.
500' FNL 468' FEL

Uintah Engineering & Land Surveying
85 South 200 East Vernal, Utah 84078
(801) 789-1017 * FAX (801) 789-1018
Email: uels@easilink.com

TOPOGRAPHIC MAP	6 MONTH	4 DAY	97 YEAR	C TOPO
SCALE: 1" = 1000'	DRAWN BY: D.COX	REVISED: 00-00-00		

APPLICATION FOR GRANT OF CORRIDOR RIGHT-OF-WAY

BARRETT RESOURCES CORPORATION. having a resident or principal place of business at **P.O. Box 290, Neola, Utah, 84053,** hereby files an application with the Bureau of Indian Affairs, pursuant to the terms and provisions of the Act of February 5, 1948 (62 Stat. 17; 25 U.S.C. 323), and to the regulations of the Department of the Interior contained in Title 25, Code of Federal Regulations, Part 169, for the grant of a Right-of-Way for the following purposes and reasons:

To construct a Drill Site and Corridor Right-of Way to service the Ute Tribal #1-26

Across the following described Indian Land SW 1/4 OF SECTION 24, NW 1/4 OF SECTION 25 & NE 1/4 OF SECTION 26, T5S, R5W, U.S.B.&M.

Drill Site = 1.992 Ac.

Corridor R-O-W = 3.527 Ac. Total Acreage = 5.519 Acres
(Access Road & Gas Pipeline)

Said Right-of-Way to be approximately 3073.15 feet in length, 50 feet in width, and 3.527 Acres, and more particularly described and shown on the map of definite location to be attached and made a part hereof.

The applicant understands and hereby expressly agrees to the following stipulations:

(a) To construct and maintain the Right-of-Way in a workmanlike manner.

(b) To pay promptly all damages and compensation, in addition to the deposit made pursuant to 169.4 determined by the Secretary to be due the landowners and authorized users and occupants of the land on account of the survey, granting, construction and maintenance of the Right-of-Way.

(c) To indemnify the landowners and authorized users and occupants against any liability for loss of life, personal injury and property damage arising from the construction, maintenance, occupancy or use of the lands by the applicant, his employees, contractors and their employees or subcontractors and their employees.

(d) To restore the lands as nearly as may be possible to their original condition upon the completion of the construction to the extent compatible with the purpose for which the Right-of-Way was granted.

(e) To clear and keep clear the lands within the Right-of-Way to the extent compatible with the purpose of the Right-of-Way; and to dispose of all vegetative and other material cut, uprooted, or otherwise accumulated during the construction and maintenance of the project.

(f) To take soil and resource conservation and protection measures, including weed control, on the land covered by the Right-of-Way.

(g) To do everything reasonable within its power to prevent and suppress fires on or near the lands to be occupied under the Right-of-Way.

(h) To build and repair such roads, fences, and trails as may be destroyed or injured by construction work and to build and maintain necessary and suitable crossings for all roads and trails that intersect the works constructed, maintained, or operated under the Right-of-Way.

(I) That upon revocation or termination of the Right-of-Way, the applicant shall, so far as is reasonably possible, restore the land to its original condition.

(j) To at all times keep the Secretary informed of its address, and in case of corporations of the address of its principal officers.

(k) That the applicant will not interfere with the use of the lands by or under the authority of the landowners for any purpose not inconsistent with the primary purpose for which the Right-of-Way is granted.

IN WITNESS THEREOF, BARRETT RESOURCES CORPORATION. has caused this instrument to be executed this 9 day of JUNE, 1997.

Chris Landrum
WITNESS

McCoy Anderson
WITNESS

BARRETT RESOURCES CORPORATION
APPLICANT

Doug Barone
Doug Barone/Production Supervisor-Utah
P.O. Box 290
Neola, Utah 84053
Phone:(801)353-4625

SUPPORTING DOCUMENTS:

( ) Written consent of the landowners.
( ) Evidence of good faith and financial responsibility.
(x) $0 as per the terms of the Exploration and Development Agreement.
( ) State certified copy of corporate charter or articles of corporation.
( ) Certified copy of resolution or bylaws of the corporation authorizing the filing of the stipulations.
( ) State certification that the applicant is authorized to do business in the State where the land is located.
( ) Certified copy of the articles of partnership or association.
(x) Map of definite location.
( ) Other:

BARRETT RESOURCES CORPORATION
UTE TRIBAL #1-26
CORRIDOR RIGHT-OF-WAY & DAMAGE AREA
SECTION 26, T5S, R5W, U.S.B.&M.

TOTAL CORRIDOR RIGHT-OF-WAY ON UTE TRIBAL LANDS

TOTAL LENGTH OF RIGHT-OF-WAY IS 3073.15' OR 0.582 MILES. WIDTH OF RIGHT-OF-WAY IS 50' (25' PERPENDICULAR ON EACH SIDE OF THE CENTERLINE). CONTAINS 3.527 ACRES MORE OR LESS.

ENGINEER'S AFFIDAVIT

STATE OF UTAH)
) SS
COUNTY OF UINTAH)

ROBERT L. KAY, BEING FIRST DULY SWORN DEPOSES AND STATES THAT HE IS THE REGISTERED LAND SURVEYOR, FOR BARRETT RESOURCES CORPORATION, THAT THESE SURVEYS WERE MADE BY HIM (OR UNDER HIS SUPERVISION): THAT HE HAS EXAMINED THE FIELD NOTES OF THE SURVEYS OF THE DAMAGE AREA & CORRIDOR RIGHT-OF-WAY AS DESCRIBED AND SHOWN ON THIS MAP, THAT THIS MAP WAS PREPARED UNDER HIS DIRECTION FROM SAID FIELD NOTES; AND THAT SAID RIGHT-OF-WAY, 0.582 MILES IN LENGTH BEGINNING AND ENDING AS SHOWN ON THIS MAP IS ACCURATELY REPRESENTED.

Robert L Kay

REGISTERED LAND SURVEYOR
REGISTRATION NO. 161319
STATE OF UTAH

ACKNOWLEDGEMENT

SUBSCRIBED AND SWORN BEFORE ME THIS 6 DAY OF June 1997.

MY COMMISSION EXPIRES Aug 17, 1998.

NOTARY PUBLIC
TRACY D. HENLINE
1379 East 5000 South
Vernal, Utah 84078
My Commission Expires 8/17/98
STATE OF UTAH

NOTARY PUBLIC
VERNAL, UTAH

APPLICANT'S CERTIFICATE

I, DOUG BARONE, DO HEREBY CERTIFY THAT I AM THE AGENT FOR BARRETT RESOURCES CORPORATION, HEREINAFTER DESIGNATED THE APPLICANT; THAT ROBERT L. KAY WHO SUBSCRIBED TO THE FOREGOING AFFIDAVIT, IS EMPLOYED BY THE APPLICANT AS A LAND SURVEYOR AND THAT HE WAS DIRECTED BY THE APPLICANT TO SURVEY THE LOCATION OF THIS DAMAGE AREA & CORRIDOR RIGHT-OF-WAY, 0.582 MILES IN LENGTH BEGINNING AT STA. 0+00 AND ENDING AT STA. 30+73.15, THAT SAID DAMAGE AREA & CORRIRDOR RIGHT-OF-WAY ARE ACCURATELY REPRESENTED ON THIS MAP; THAT SUCH SURVEY AS REPRESENTED ON THIS MAP HAS BEEN ADOPTED BY THE APPLICANT AS THE DEFINITE LOCATION OF THE RIGHT-OF-WAY THEREBY SHOWN; AND THAT THE MAP HAS BEEN PREPARED TO BE FILED WITH THE SECRETARY OF THE INTERIOR OR HIS DULY AUTHORIZED REPRESENTATIVE AS PART OF THE APPLICATION FOR SAID RIGHT-OF-WAY TO BE GRANTED THE APPLICANT, ITS SUCCESSORS AND ASSIGNS, WITH THE RIGHT TO CONSTRUCT, MAINTAIN, AND REPAIR IMPROVEMENTS, THEREON AND THEREOVER, FOR SUCH PURPOSES, AND WITH THE FURTHER RIGHT IN THE APPLICANT, ITS SUCCESSORS AND ASSIGNS TO TRANSFER THIS RIGHT-OF-WAY BY ASSIGNMENT, GRANT, OR OTHERWISE.

Doug Barone

APPLICANT

PRODUCTION SUPERVISOR - UTAH
TITLE

BARRETT RESOURCES CORPORATION

LOCATION DAMAGE AREA & CORRIDOR RIGHT-OF-WAY ON UTE TRIBAL LANDS

(For UTE TRIBAL #1-26)

LOCATED IN
SECTION 26, T5S, R5W, U.S.B.&M.
DUCHESNE COUNTY, UTAH

CORRIDOR RIGHT-OF-WAY DESCRIPTION

A 50' WIDE RIGHT-OF-WAY 25' ON EACH SIDE OF THE FOLLOWING DESCRIBED CENTERLINE.

BEGINNING AT A POINT IN THE SW 1/4 SW 1/4 OF SECTION 24, T5S, R5W, U.S.B.&M. WHICH BEARS N28°36'25"E 854.16' FROM THE SOUTHWEST CORNER OF SAID SECTION 24, THENCE S02°53'59"W 749.39' TO A POINT ON THE SOUTH LINE OF THE SW 1/4 OF SECTION 24, WHICH BEARS N89°46'30"E 371.06' FROM THE SOUTHWEST CORNER OF SAID SECTION 24, THENCE S02°53'59"W 98.26'; THENCE S40°19'44"E 211.65'; THENCE S70°59'42"E 175.86'; THENCE S52°31'42"E 155.20'; THENCE S14°22'05"E 74.84'; THENCE S48°51'47"W 67.47'; THENCE S87°51'53"W 127.06'; THENCE N58°26'26"W 200.23'; THENCE N80°50'18"W 105.89'; THENCE S25°40'43"W 122.60'; THENCE S59°22'23"W 104.07'; THENCE N46°34'58"W 142.36'; THENCE N68°00'33"W 118.94' TO A POINT ON THE WEST LINE OF THE NW 1/4 NW 1/4 OF SECTION 25, T5S, R5W, U.S.B.&M. WHICH BEARS S00°14'15"E 430.82' FROM THE NORTHWEST CORNER OF SAID SECTION 25, THENCE N68°00'33"W 7.10'; THENCE N35°52'32"W 202.50'; THENCE N62°30'33"W 117.95'; THENCE S73°54'46"W 193.94'; THENCE S50°27'30"W 97.84' TO A POINT IN THE NE 1/4 NE 1/4 OF SECTION 26, T5S, R5W, U.S.B.&M. WHICH BEARS S56°23'09"W 588.27' FROM THE NORTHEAST CORNER OF SAID SECTION 26. THE SIDE LINES OF SAID DESCRIBED RIGHT-OF-WAY BEING SHORTENED OR ELONGATED TO MEET THE GRANTOR'S PROPERTY LINES. BASIS OF BEARINGS IS THE WEST LINE OF THE SW 1/4 OF SECTION 24, T5S, R5W, U.S.B.&M. WHICH IS ASSUMED FROM G.L.O. INFORMATION TO BEAR N00°01'W. CONTAINS 3.527 ACRES MORE OR LESS.

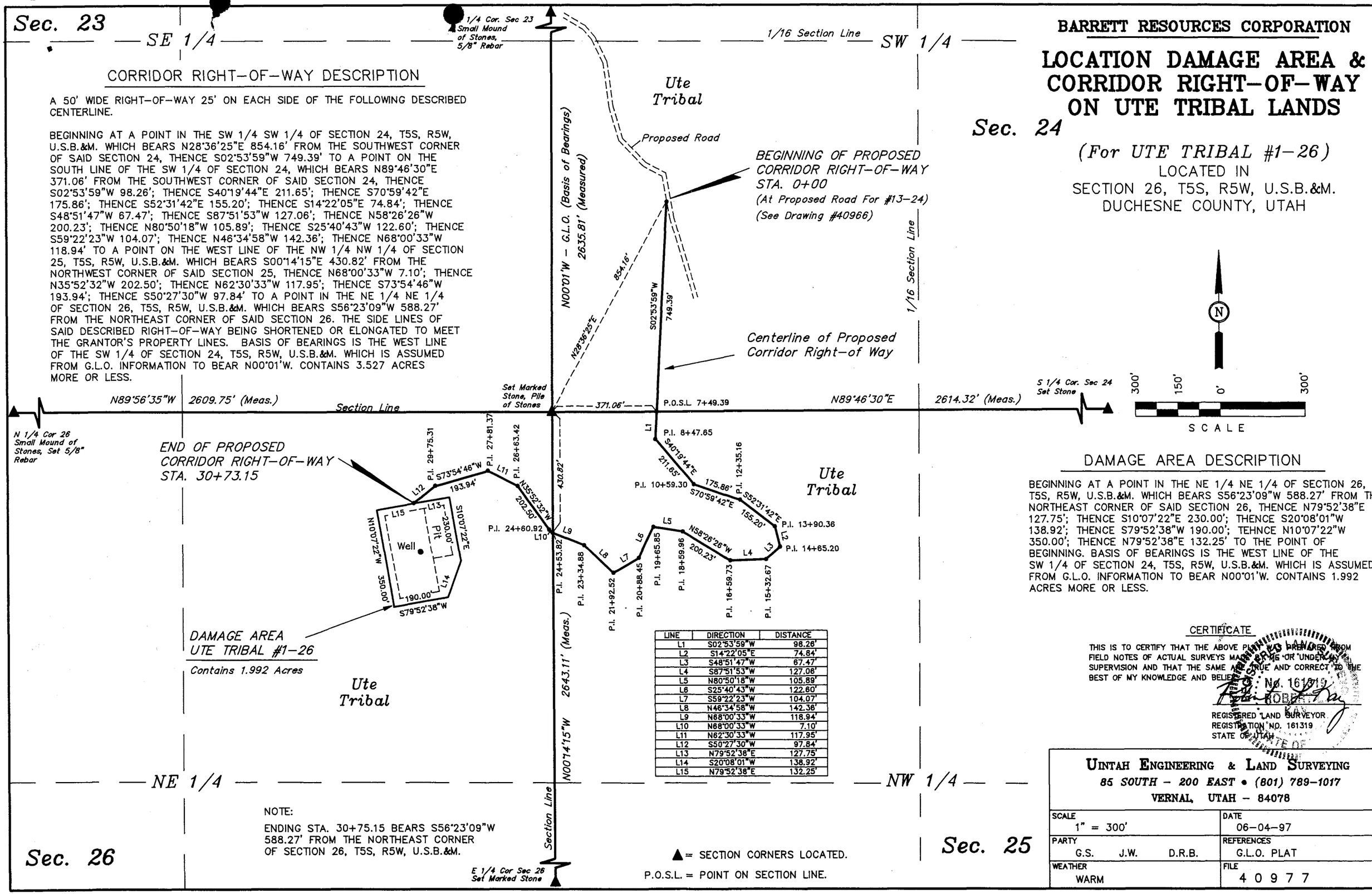

LINE	DIRECTION	DISTANCE
L1	S02°53'59"W	98.26'
L2	S14°22'05"E	74.84'
L3	S48°51'47"W	67.47'
L4	S87°51'53"W	127.06'
L5	N80°50'18"W	105.89'
L6	S25°40'43"W	122.60'
L7	S59°22'23"W	104.07'
L8	N46°34'58"W	142.36'
L9	N68°00'33"W	118.94'
L10	N68°00'33"W	7.10'
L11	N62°30'33"W	117.95'
L12	S50°27'30"W	97.84'
L13	N79°52'38"E	127.75'
L14	S20°08'01"W	138.92'
L15	N79°52'38"E	132.25'

NOTE:

ENDING STA. 30+75.15 BEARS S56°23'09"W 588.27' FROM THE NORTHEAST CORNER OF SECTION 26, T5S, R5W, U.S.B.&M.

▲ = SECTION CORNERS LOCATED.

P.O.S.L. = POINT ON SECTION LINE.

DAMAGE AREA DESCRIPTION

BEGINNING AT A POINT IN THE NE 1/4 NE 1/4 OF SECTION 26, T5S, R5W, U.S.B.&M. WHICH BEARS S56°23'09"W 588.27' FROM THE NORTHEAST CORNER OF SAID SECTION 26, THENCE N79°52'38"E 127.75'; THENCE S10°07'22"E 230.00'; THENCE S20°08'01"W 138.92'; THENCE S79°52'38"W 190.00'; TEHNCE N10°07'22"W 350.00'; THENCE N79°52'38"E 132.25' TO THE POINT OF BEGINNING. BASIS OF BEARINGS IS THE WEST LINE OF THE SW 1/4 OF SECTION 24, T5S, R5W, U.S.B.&M. WHICH IS ASSUMED FROM G.L.O. INFORMATION TO BEAR N00°01'W. CONTAINS 1.992 ACRES MORE OR LESS.

CERTIFICATE

THIS IS TO CERTIFY THAT THE ABOVE PLAT WAS PREPARED FROM FIELD NOTES OF ACTUAL SURVEYS MADE BY ME OR UNDER MY SUPERVISION AND THAT THE SAME ARE TRUE AND CORRECT TO THE BEST OF MY KNOWLEDGE AND BELIEF.

REGISTERED LAND SURVEYOR
REGISTRATION NO. 161319
STATE OF UTAH

UINTAH ENGINEERING & LAND SURVEYING
85 SOUTH - 200 EAST • (801) 789-1017
VERNAL, UTAH - 84078

SCALE 1" = 300'	DATE 06-04-97
PARTY G.S. J.W. D.R.B.	REFERENCES G.L.O. PLAT
WEATHER WARM	FILE 40977

WORKSHEET
APPLICATION FOR PERMIT TO DRILL

APD RECEIVED: 06/27/97

API NO. ASSIGNED: 43-013-31912

WELL NAME: UTE TRIBAL 1-26
OPERATOR: BARRETT RESOURCES (N9305)

PROPOSED LOCATION:
NENE 26 - T05S - R05W
SURFACE: 0500-FNL-0468-FEL
BOTTOM: 0500-FNL-0468-FEL
DUCHESNE COUNTY
BRUNDAGE CANYON FIELD (072)

LEASE TYPE: IND
LEASE NUMBER: 14-20-H62-3444

PROPOSED PRODUCING FORMATION: GRRV

INSPECT LOCATION BY: / /		
TECH REVIEW	Initials	Date
Engineering		
Geology		
Surface		

RECEIVED AND/OR REVIEWED:

✓ Plat
✓ Bond: Federal [✓] State [] Fee []
(Number 6101763412)
N Potash (Y/N)
N Oil shale (Y/N)
✓ Water permit
(Number JOE SHIELDS)
N RDCC Review (Y/N)
(Date:)

LOCATION AND SITING:

___ R649-2-3. Unit: ___

✓ R649-3-2. General.

___ R649-3-3. Exception.

___ Drilling Unit.
Board Cause no: ___
Date: ___

COMMENTS: ___

STIPULATIONS: ___

OPERATOR: BARRETT RESOURCES (N9305)

FIELD: BRUNDAGE CANYON (072)

SEC, TWP, RNG: 26, T5S, R5E

COUNTY: DUCHESNE UAC: R649-3-2 & R649-3-3

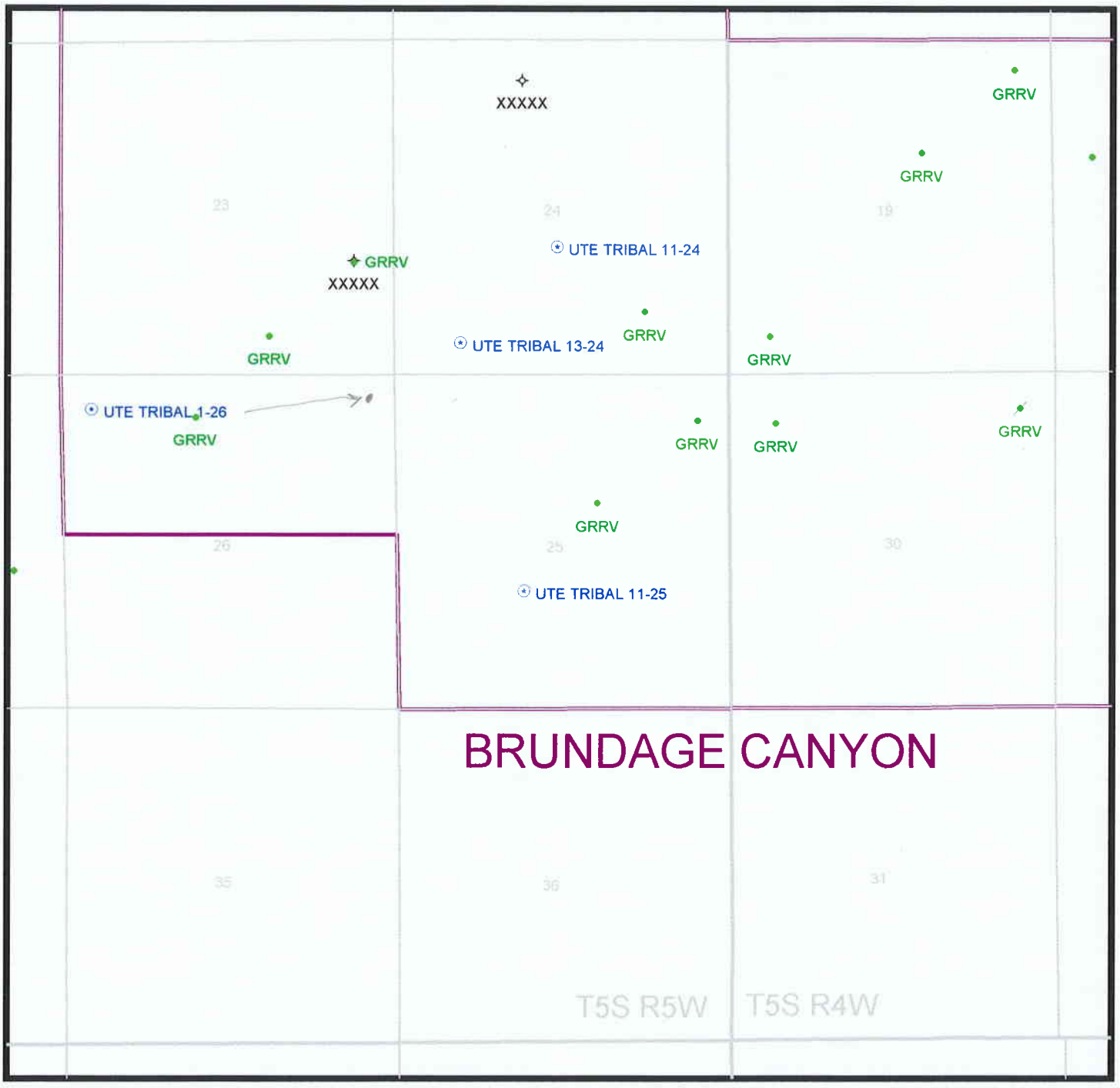

PREPARED:
DATE: 1-JULY-97

State of Utah
DEPARTMENT OF NATURAL RESOURCES
DIVISION OF OIL, GAS AND MINING

Michael O. Leavitt
Governor
Ted Stewart
Executive Director
James W. Carter
Division Director

1594 West North Temple, Suite 1210
Box 145801
Salt Lake City, Utah 84114-5801
801-538-5340
801-359-3940 (Fax)
801-538-7223 (TDD)

July 11, 1997

Barrett Resources Corporation
P.O. Box 290
Neola, Utah 84053

Re: Ute Tribal 1-26 Well, 500' FNL, 468' FEL, NE NE, Sec. 26, T. 5 S., R. 5 W., Duchesne County, Utah

Gentlemen:

Pursuant to the provisions and requirements of Utah Code Ann. 40-6-1 et seq., Utah Administrative Code R649-3-1 et seq., and the attached Conditions of Approval, approval to drill the referenced well is granted.

This approval shall expire one year from the above date unless substantial and continuous operation is underway, or a request for extension is made prior to the expiration date. The API identification number assigned to this well is 43-013-31912.

Sincerely,

Lowell P. Braxton
Deputy Director

lwp
Enclosures
cc: Duchesne County Assessor
Bureau of Land Management, Vernal District Office

Operator: Barrett Resources Corporation

Well Name & Number: Ute Tribal 1-26

API Number: 43-013-31912

Lease: 14-20-H62-3444

Location: NE NE **Sec.** 26 **T.** 5 S. **R.** 5 W.

Conditions of Approval

1. General
   Compliance with the requirements of Utah Admin. R. 649-1 et seq., the Oil and Gas Conservation General Rules, and the applicable terms and provisions of the approved Application for Permit to Drill.

2. Notification Requirements
   Notify the Division within 24 hours following spudding the well or commencing drilling operations. Contact Jimmie Thompson at (801)538-5336.

   Notify the Division prior to commencing operations to plug and abandon the well. Contact John R. Baza (801)538-5334 or Mike Hebertson at (801) 538-5333.

3. Reporting Requirements
   All required reports, forms and submittals shall be promptly filed with the Division, including but not limited to the Entity Action Form (Form 6), Report of Water Encountered During Drilling (Form 7), Weekly Progress Reports for drilling and completion operations, and Sundry Notices and Reports on Wells requesting approval of change of plans or other operational actions.

Form 3160-3
(November 1983)
(formerly 9-331C)

SUBMIT IN TRIPLICATE*
(Other instructions on reverse side)

Form approved.
Budget Bureau No. 1004-0136
Expires August 31, 1985

UNITED STATES
DEPARTMENT OF THE INTERIOR
BUREAU OF LAND MANAGEMENT

APPLICATION FOR PERMIT TO DRILL, DEEPEN, OR PLUG BACK

5. LEASE DESIGNATION AND SERIAL NO.: 14-20-H62-3444

6. IF INDIAN, ALLOTTEE OR TRIBE NAME:

1a. TYPE OF WORK: DRILL [X] DEEPEN [ ] PLUG BACK [ ]

b. TYPE OF WELL: OIL WELL [X] GAS WELL [ ] OTHER — SINGLE ZONE [ ] MULTIPLE ZONE [ ]

7. UNIT AGREEMENT NAME:

8. FARM OR LEASE NAME:

2. NAME OF OPERATOR: BARRETT RESOURCES CORPORATION

9. WELL NO.: UTE TRIBAL 1-26

3. ADDRESS OF OPERATOR: PO BOX 290 * NEOLA, UTAH * 84053

10. FIELD AND POOL, OR WILDCAT:

4. LOCATION OF WELL (Report location clearly and in accordance with any State requirements.*)
At surface: NE ¼, NE ¼, 500 FNL, 468' FWL, SEC 26, T5S, R5W
At proposed prod. zone

11. SEC., T., R., M., OR BLK. AND SURVEY OR AREA: SEC 26, T5S, R5W

14. DISTANCE IN MILES AND DIRECTION FROM NEAREST TOWN OR POST OFFICE*: 24.4 MILES SOUTH OF MYTON, UTAH

12. COUNTY OR PARISH: DUCHESNE

13. STATE: UTAH

15. DISTANCE FROM PROPOSED* LOCATION TO NEAREST PROPERTY OR LEASE LINE, FT. (Also to nearest drlg. unit line, if any)	16. NO. OF ACRES IN LEASE	17. NO. OF ACRES ASSIGNED TO THIS WELL
468'	640'	40 ACRES
18. DISTANCE FROM PROPOSED LOCATION* TO NEAREST WELL, DRILLING, COMPLETED, OR APPLIED FOR, ON THIS LEASE, FT.	**19. PROPOSED DEPTH**	**20. ROTARY OR CABLE TOOLS**
3,000'	5650'	ROTARY

21. ELEVATIONS (Show whether DF, RT, GR, etc.): 6732'

22. APPROX. DATE WORK WILL START*: JULY 15, 1997

23. PROPOSED CASING AND CEMENTING PROGRAM

SIZE OF HOLE	SIZE OF CASING	WEIGHT PER FOOT	SETTING DEPTH	QUANTITY OF CEMENT
12¼	8-5/8	24	280'	TO SURFACE
7-7/8	5-1/2	15.5	5650'	CMT TOP TO COVER OIL SHALE

OPERATOR REQUESTS PERMISSION TO DRILL THE SUBJECT WELL.
PLEASE SEE THE ATTACHED 10 POINT AND THE 13 POINT SURFACE USE PLAN.

IF YOU REQUIRE ADDITIONAL INFORMATION PLEASE CONTACT:

DOUG BARONE
PO BOX 290
NEOLA, UT 84053

OFFICE: 801-353-4625 CELLULAR: 801-828-6116

RECEIVED
JUN 25 1997

RECEIVED
JUL 16 1997
DIV. OF OIL, GAS & MINING

IN ABOVE SPACE DESCRIBE PROPOSED PROGRAM: If proposal is to deepen or plug back, give data on present productive zone and proposed new productive zone. If proposal is to drill or deepen directionally, give pertinent data on subsurface locations and measured and true vertical depths. Give blowout preventer program, if any.

24.

SIGNED D.R. Barone TITLE PRODUCTION SUPERVISOR DATE JUNE 23, 1997

(This space for Federal or State office use)

PERMIT NO. _____ APPROVAL DATE _____

APPROVED BY Edwin I. Forsman TITLE ACTING Assistant Field Manager Mineral Resources DATE JUL 08 1997

CONDITIONS OF APPROVAL, IF ANY:

NOTICE OF APPROVAL

*See Instructions On Reverse Side

Title 18 U.S.C. Section 1001, makes it a crime for any person knowingly and willfully to make to any department or agency of the United States any false, fictitious or fraudulent statements or representations as to any matter within its jurisdiction.

UT080-[illegible]12

UNITED STATES GOVERNMENT

memorandum

DATE: June 26, 1997

REPLY TO ATTN OF: Superintendent, Uintah & Ouray Agency

SUBJECT: Concurrence Letter for BARRETT RESOURCES CORPORATION
UT 1-26, NENE, SEC. 26 UT 11-25 NESW, SEC. 25
UT 13-24, SWSE, SEC. 24 UT 11-24, NESW, SEC. 24

RECEIVED
JUN 26 1997

TO:

Bureau of Land Management, Vernal District Office
ATTENTION: Minerals and Mining Division

We recommend approval of the Application for Permit to Drill on the subject well.

Based on available information received on JUNE 25. 1997, we cleared the proposed location in the following areas of environmental impact.

YES _x_ NO ____ Listed threatened or endangered species
YES _x_ NO ____ Critical wildlife habitat
YES _x_ NO ____ Archaeological or cultural resources
YES __ NO ____ Air quality aspects (to be used only if project is in or adjacent to a Class I area

REMARKS: The Ute Tribe Energy & Minerals Department is recommending the following criteria to be adhered during all phases of construction activities.

1. The Ute Tribe Energy and Minerals Department is to be notified 48 hours prior to construction.
2. Tribal Technician to monitor construction.
3. Barrett Resources Corporation will assure the Ute Tribe that any/all contractors and any sub-contractors has acquired a Tribal Business License and have access permits prior to construction.
5. All vehicular traffic, personnel movement, construction and restoration operations should be confined to the area examined, as referenced in report, and to the existing roadways and/or evaluated access routes.
6. All mitigative stipulation's contained in the Bureau of Indian Affairs site specific Environmental Analysis (EA) will be strictly adhered.
7. All personnel should refrain from collecting artifacts and from disturbing any significant cultural resources in the area.
8. The personnel from the Ute Tribe Energy & Minerals Department should be consulted, should cultural remains from subsurface deposits be exposed or identified during construction work.
9. Upon completion of Application for Right-of-way, the Ute Tribe Energy and Minerals Department will be notified by Petroglyph Operating Company, so that a Tribal Technician can verify Affidavits of Completion's.

OPTIONAL FORM NO. 10
GSA
(REV. 1-94)
5010-118

☆U.S. GPO: 1994-[illegible]/10064

CONDITIONS OF APPROVAL
APPLICATION FOR PERMIT TO DRILL

Company/Operator: Barrett Resources Corporation

Well Name & Number: Ute Tribal 1-26

API Number: 43-013-31912

Lease Number: 14-20-H62-3444

Location: NENE Sec. 26 T. 5S R. 5W

NOTIFICATION REQUIREMENTS

Location Construction	-	at least forty-eight (48) hours prior to construction of location and access roads.
Location Completion	-	prior to moving on the drilling rig.
Spud Notice	-	at least twenty-four (24) hours prior to spudding the well.
Casing String and Cementing	-	at least twenty-four (24) hours prior to running casing and cementing all casing strings.
BOP and Related Equipment Tests	-	at least twenty-four (24) hours prior to initiating pressure tests.
First Production Notice	-	within five (5) business days after new well begins, or production resumes after well has been off production for more than ninety (90) days.

For more specific details on notification requirements, please check the Conditions of Approval for Notice to Drill and Surface Use Program.

CONDITIONS OF APPROVAL FOR NOTICE TO DRILL

Approval of this application does not warrant or certify that the applicant holds legal or equitable title to those rights in the subject lease which would entitle the applicant to conduct operations thereon.

All lease and/or unit operations will be conducted in such a manner that full compliance is made with applicable laws, regulations (43 CFR 3100), Onshore Oil and Gas Orders, and the approved plan of operations. The operator is fully responsible for the actions of his subcontractors. A copy of these conditions will be furnished the field representative to insure compliance.

Be aware fire restrictions may be in effect when location is being constructed and/or when well is being drilled. Contact the appropriate Surface Management Agency for information.

A. DRILLING PROGRAM

1. Estimated Depth at Which Oil, Gas, Water, or Other Mineral Bearing Zones are Expected to be Encountered

Report ALL water shows and water-bearing sands to Tim Ingwell of this office **prior to setting the next casing string or requesting plugging orders.** Faxed copies of State of Utah form OGC-8-X are acceptable. If noticeable water flows are detected, submit samples to this office along with any water analyses conducted.

All usable water and prospectively valuable minerals (as described by BLM at onsite) encountered during drilling, will be recorded by depth and adequately protected. All oil and gas shows will be tested to determine commercial potential.

2. Pressure Control Equipment

The BOP and related equipment shall meet the minimum requirements of Onshore Oil and Gas Order No. 2 for equipment and testing requirements, procedures, etc., for a **3M** system and individual components shall be operable as designed. Chart recorders shall be used for all pressure tests.

Test charts, with individual test results identified, shall be maintained on location while drilling and shall be made available to a BLM representative upon request.

If an air compressor is on location and is being utilized to provide air for the drilling medium while drilling, the special drilling requirements in Onshore Oil and Gas Order No. 2, regarding air or gas drilling shall be adhered to. If a mist system is being utilized then the requirement for a deduster shall be waived.

3. Casing Program and Auxiliary Equipment

Surface casing shall have centralizers on the bottom three joints, with a minimum of one centralizer per joint.

As a minimum, the usable water resources shall be isolated and/or protected by having a cement top for the production casing at least 200 ft. above the top of the Mahogany oil shale zone, identified at1,501 ft. If gilsonite is encountered while drilling, it shall be isolated and/or protected via the cementing program.

4. Mud Program and Circulating Medium

Hazardous substances specifically listed by the EPA as a hazardous waste or demonstrating a characteristic of a hazardous waste will not be used in drilling, testing, or completion operations.

No chromate additives will be used in the mud system on Federal and Indian lands without prior BLM approval to ensure adequate protection of fresh water aquifers.

5. .Coring, Logging and Testing Program

Daily drilling and completion progress reports shall be submitted to this office on a weekly basis.

All Drill Stem tests (DST) shall be accomplished during daylight hours, unless specific approval to start during other hours is obtained from the AO. However, DSTs may be allowed to continue at night if the test was initiated during daylight hours and the rate of flow is stabilized and if adequate lighting is available (i.e., lighting which is adequate for visibility and vaporproof for safe operations). Packers can be released, but tripping should not begin before daylight unless prior approval is obtained from the AO.

A cement bond log (CBL) will be run from the production casing shoe to the top of the cement and shall be utilized to determine the bond quality for the production casing. Submit a field copy of the CBL to this office.

Whether the well is completed as a dry hole or as a producer, "Well Completion and Recompletion Report and Log" (Form 3160-4) will be submitted not later than 30 days after completion of the well or after completion of operations being performed, in accordance with 43 CFR 3164. Two copies of all logs, core descriptions, core analyses, well-test data, geologic summaries, sample description, and all other surveys or data obtained and compiled during the drilling, workover, and/or completion operations, will be filed with Form 3160-4. Samples (cuttings, fluids, and/or gases) will be submitted when requested by the AO.

6. Notifications of Operations

No location will be constructed or moved, no well will be plugged, and no drilling or workover equipment will be removed from a well to be placed in a suspended status without prior approval of the AO. If operations are to be suspended, prior approval of the AO will be obtained and notification given before resumption of operations.

Operator shall report production data to MMS pursuant to 30 CFR 216.5 using form MMS/3160.

Immediate Report: Spills, blowouts, fires, leaks, accidents, or any other unusual occurrences shall be promptly reported in accordance with the requirements of NTL-3A or its revision.

If a replacement rig is contemplated for completion operations, a "Sundry Notice" (Form 3160-5) to that effect will be filed, for prior approval of the AO, and all conditions of this approved plan are applicable during all operations conducted with the replacement rig.

The date on which production is commenced or resumed will be construed for oil wells as the date on which liquid hydrocarbons are first sold or shipped from a temporary storage facility, such as a test tank, and for which a run ticket is required to be generated or, the date on which liquid hydrocarbons are first produced into a permanent storage facility, whichever first occurs; and, for gas wells as the date on which associated liquid hydrocarbons are first sold or shipped from a temporary storage facility, such as a test tank, and for which a run ticket is required to be generated or, the date on which gas is first measured through permanent metering facilities, whichever first occurs.

Should the well be successfully completed for production, the AO will be notified when the well is placed in a producing status. Such notification will be sent by telegram or other written communication, not later than five (5) days following the date on which the well is placed on production.

Gas produced from this well may not be vented or flared beyond an initial authorized test period of 30 days or 50 MMCF following its completion, whichever occurs first, without the prior written approval of the Authorized Officer. Should gas be vented or flared without approval beyond the authorized test period, the operator may be directed to shut-in the well until the gas can be captured or approval to continue venting or flaring as uneconomic is granted and the operator shall be required to compensate the lessor for that portion of the gas vented or flared without approval which is determined to have been avoidably lost.

A schematic facilities diagram as required by 43 CFR 3162.7-2, 3162.7-3, and 3162.7-4 shall be submitted to the appropriate District Office within thirty (30) days of installation or first production, whichever occurs first. All site security regulations as specified in Onshore Oil & Gas Order No. 3 shall be adhered to. All product lines entering and leaving hydrocarbon storage tanks will be effectively sealed in accordance with 43 CFR 3162.7-4.

No well abandonment operations will be commenced without the prior approval of the AO. In the case of newly drilled dry holes or failures, and in emergency situations, oral approval will be obtained from the AO. A "Subsequent Report of Abandonment" Form 3160-5, will be filed with the AO within thirty (30) days following completion of the well for abandonment. This report will indicate where plugs were placed and the current status of surface restoration. Final abandonment will not be approved until the surface reclamation work required by the approved APD or approved abandonment notice has been completed to the satisfaction of the AO or his representative, or the appropriate Surface Managing Agency.

7. Other Information

All loading lines will be placed inside the berm surrounding the tank battery.

All off-lease storage, off-lease measurement, or commingling onlease or off-lease will have prior written approval from the AO.

The oil and gas measurement facilities will be installed on the well location. The oil and gas meters will be calibrated in place prior to any deliveries. Tests for meter accuracy will be conducted on initial meter installations and at least quarterly thereafter. The AO will be provided with a date and time for the initial meter calibration and all future meter proving schedules. A copy of the meter calibration reports will be submitted to the Vernal District Office. All meter measurement facilities will conform with Onshore Oil & Gas Order No. 4 for liquid hydrocarbons and Onshore Oil & Gas Order No. 5 for natural gas measurement.

The use of materials under BLM jurisdiction will conform to 43 CFR 3610.2-3.

There will be no deviation from the proposed drilling and/or workover program without prior approval from the AO. Safe drilling and operating practices must be observed. All wells, whether drilling, producing, suspended, or abandoned will be identified in accordance with 43 CFR 3162.

"Sundry Notice and Report on Wells" (Form 3160-5) will be filed for approval for all changes of plans and other operations in accordance with 43 CFR 3162.3-2.

Section 102(b)(3) of the Federal Oil and Gas Royalty Management Act of 1982, as implemented by the applicable provisions of the operating regulations at Title 43 CFR 3162.4-1(c), requires that "not later than the 5th business day after any well begins production on which royalty is due anywhere on a lease site or allocated to a lease site, or resumes production in the case of a well which has been off production for more than 90 days, the operator shall notify the authorized officer by letter or sundry notice, Form 3160-5, or orally to be followed by a letter or sundry notice, of the date on which such production has begun or resumed."

If you fail to comply with this requirement in the manner and time allowed, you shall be liable for a civil penalty of up to $10,000 per violation for each day such violation continues, not to exceed a maximum of 20 days. See Section 109(c)(3) of the Federal Oil and Gas Royalty Management Act of 1982 and the implementing regulations at Title 43 CFR 3162.4-1(b)(5)(ii).

APD approval is valid for a period of one (1) year from the signature date. An extension period may be granted, if requested, prior to the expiration of the original approval period.

In the event after-hours approvals are necessary, please contact one of the following individuals:

Ed Forsman Petroleum Engineer	(801) 789-7077
Wayne P. Bankert Petroleum Engineer	(801) 789-4170
Jerry Kenczka Petroleum Engineer	(801) 781-1190
BLM FAX Machine	(801) 781-4410

EPA'S LIST OF NONEXEMPT EXPLORATION AND PRODUCTION WASTES

While the following wastes are nonexempt, they are not necessarily hazardous.

Unused fracturing fluids or acids

Gas plant cooling tower cleaning wastes

Painting wastes

Oil and gas service company wastes, such as empty drums, drum rinsate, vacuum truck rinsate, sandblast media, painting wastes, spend solvents, spilled chemicals, and waste acids

Vacuum truck and drum rinsate from trucks and drums, transporting or containing nonexempt waste

Refinery wastes

Liquid and solid wastes generated by crude oil and tank bottom reclaimers

Used equipment lubrication oils

Waste compressor oil, filters, and blowdown

Used hydraulic fluids

Waste solvents

Waste in transportation pipeline-related pits

Caustic or acid cleaners

Boiler cleaning wastes

Boiler refractory bricks

Incinerator ash

Laboratory wastes

Sanitary wastes

Pesticide wastes

Radioactive tracer wastes

Drums, insulation and miscellaneous solids.

SURFACE USE PROGRAM

The Ute Tribe Energy and Mineral Department is to be notified 48 hours prior to construction. A Tribal Technician is to monitor construction.

Thirty (30) foot wide Rights-Of-Way (ROWs) corridor shall be granted for the following:

Access roads which shall have constructed travel width limited to 18 feet, except as granted for sharp curves or intersections or where deep cuts are required for road construction.

Surface pipelines will be constructed to lay on the soil surface, and the ROW for the pipeline will not be bladed or cleared of vegetation.

Barrett will assure the Ute Tribe that any/all contractors and subcontractors have acquired a Tribal Business License and have access permits prior to construction.

All vehicular traffic, personnel movement, construction, and restoration activities shall be confined to the areas examined, as referenced in report, and to the existing roadways and/or evaluated access routes.

All personnel shall refrain from collecting artifacts and from disturbing any significant cultural resources in the area.

The Ute Tribe Energy & Mineral Department shall be consulted if cultural remains from subsurface deposits are exposed or identified during construction.

Before the site is abandoned, the company will be required to restore the well site and ROWs to near their original state. The disturbed areas will be reseeded with desirable perennial vegetation.

Noxious weeds will be controlled on the well site and rights-of-way. If noxious weeds spread from the project area onto adjoining land, the company will also be responsible for their control.

Reserve pits will be lined with impervious synthetic liners.

A closed production system will be used. Production fluids will be contained in leak proof tanks. All production fluids will be disposed of at approved disposal sites. The indiscriminate dumping of production fluids on roads, wellsites or other areas will not be allowed.

Firewood shall be stockpiled at convenient locations near the wellsite and along the access road.

Upon completion of the project approved under this Application for Permit to Drill and Right-of-way, the Ute Tribe Energy & Minerals Resources Department will be notified by Barrett Resources Corporation so that a Tribal Technician can verify Affidavit of Completion's.

FORM 3160-5
(JUNE 1990)

UNITED STATES
DEPARTMENT OF THE INTERIOR
BUREAU OF LAND MANAGEMENT

FORM APPROVED
Budget Bureau No. 1004-0135
Expires: March 31, 1993

SUNDRY NOTICES AND REPORTS ON WELLS

Do not use this form for proposals to drill or to deepen or reentry to a different reservoir.
Use "APPLICATION FOR PERMIT--" for such proposals

SUBMIT IN TRIPLICATE

5. Lease Designation and Serial No.: UTE 14-20-H62-3444

6. If Indian, Alottee or Tribe Name: UTE TRIBE

7. If Unit or CA, Agreement Designation:

1. Type of Well: [X] Oil Well [ ] Gas Well [ ] Other

8. Well Name and No.: UTE TRIBAL 1-26

2. Name of Operator: BARRETT RESOURCES CORPORATION

9. API Well No.: 43-013-31912

3. Address and Telephone No.: 1515 ARAPAHOE ST., TOWER 3, STE 1000, DENVER, CO 80202

10. Field and Pool, or Exploratory Area: BRUNDAGE CANYON

4. Location of Well (Footage, Sec., T., R., M., or Survey Description)
500' FNL 468' FEL
NENE SECTION 26--T5S--R5W

11. County or Parish, State: DUCHESNE, UTAH

12. CHECK APPROPRIATE BOX(s) TO INDICATE NATURE OF NOTICE, REPORT, OR OTHER DATA

TYPE OF SUBMISSION	TYPE OF ACTION	
[ ] Notice of intent	[ ] Abandonment	[ ] Change of plans
[X] Subsequent Report	[ ] Recompletion	[ ] New Construction
[ ] Final Abandonment Notice	[ ] Plugging Back	[ ] Non-Routine Fracturing
	[ ] Casing Repair	[ ] Water Shut-Off
	[ ] Altering Casing	[ ] Conversion to Injection
	[X] Other NOTICE OF SPUD SET SFC CASING	[ ] Dispose Water

(Note: Report results of multiple completion on Well Completion or Recompletion Report and Log form.)

13. Describe Proposed or Completed Operations (Clearly state all pertinent details, and give pertinent dates, including estimated date of starting any proposed work. If well is directionally drilled, give subsurface locations and measured and true vertical depths for all markers and zones pertinent to this work.)*

PLEASE BE ADVISED THE SUBJECT WELL WAS SPUD 9/02/97. 24# 8 5/8" SFC CSG WAS SET AT 304.20' WITH 125 SX CMT.

WELL DROPPED FROM DRILLING SCHEDULE.

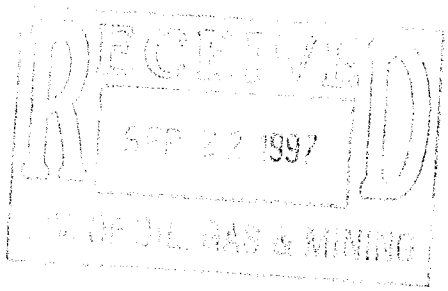

14. I hereby certify that the foregoing is true and correct

Signed Greg Davis Title PRODUCTION SERVICES SUPERVISOR Date 09/18/97

(This space for Federal or State office use)

Approved by Title Date

Conditions of approval, if any:

Title 18 U.S.C. Section 1001, makes it a crime for any person knowingly and willfully to make to any department or agency of the United States any false, fictitious or fraudulent statements or representations as to any matter within its jurisdiction.

*See Instruction on Reverse Side

FORM 9

DIVISION OF OIL, GAS AND MINING

5. Lease Designation and Serial Number: 1420H623444

6. If Indian, Allottee or Tribe Name: Ute Tribe

7. Unit Agreement Name:

SUNDRY NOTICES AND REPORTS ON WELLS

Do not use this form for proposals to drill new wells, deepen existing wells, or to reenter plugged and abandoned wells. Use APPLICATION FOR PERMIT TO DRILL OR DEEPEN form for such proposals.

8. Well Name and Number: Ute Tribal 1-26

1. Type of Well: OIL [X] GAS [ ] OTHER:

9. API Well Number: 43013 31912

2. Name of Operator: BARRETT RESOURCES CORPORATION

10. Field and Pool, or Wildcat: Brundage Canyon

3. Address and Telephone Number: 1515 ARAPAHOE ST., TOWER 3 STE 1000 DENVER, COLORADO 80202 (303) 572-3900

4. Location of Well
Footages: 500' FNL 468' FEL
QQ, Sec., T., R., M.: 26-5S-5W

County: Duchesne
State: Utah

11. CHECK APPROPRIATE BOXES TO INDICATE NATURE OF NOTICE, REPORT, OR OTHER DATA

NOTICE OF INTENT (Submit in Duplicate)		SUBSEQUENT REPORT (Submit Original Form Only)	
[ ] Abandon	[ ] New Construction	[ ] Abandon *	[ ] New Construction
[ ] Repair Casing	[ ] Pull or Alter Casing	[ ] Repair Casing	[ ] Pull or Alter Casing
[ ] Change of Plans	[ ] Recomplete	[ ] Change of Plans	[ ] Reperforate
[ ] Convert to Injection	[ ] Reperforate	[ ] Convert to Injection	[ ] Vent or Flare
[ ] Fracture Treat or Acidize	[ ] Vent or Flare	[ ] Fracture Treat or Acidize	[ ] Water Shut-Off
[ ] Multiple Completion	[ ] Water Shut-Off	[X] Other Progress report	
[ ] Other		Date of work completion	
Approximate date work will start		Report results of Multiple Completions and Recompletions to different reservoirs on WELL COMPLETION OR RECOMPLETION REPORT AND LOG form.	
		* Must be accompanied by a cement verification report.	

12. DESCRIBE PROPOSED OR COMPLETED OPERATIONS (Clearly state all pertinent details, and give pertinent dates. If well is directionally drilled, give subsurface locations and measured and true vertical depths for all markers and zones pertinent to this work.)

PLEASE SEE ATTACHED PROGRESS REPORT FOR THE PERIOD 9-15-97

THROUGH 9-21-97.

RECEIVED
SEP 23 1997
DIV. OF OIL, GAS & MINING

13.

Name & Signature: PAT SALWEROWICZ Pat Salwerowicz Title: PRODUCTION ANALYST Date: 9/22/97

(This space for State use only)

(See Instructions on Reverse Side)

(4/94)

BARRETT RESOURCES CORPORATION

UTE 1-26
500' FNL 468' FEL
SEC 26-T5S-R5W
DUCHESNE CTY., UTAH
PROPOSED DEPTH:
ELEVATION:
DRLG CONTRACTOR-CHANDLER #7
PAGE 1

8-18-97 Building location

8-31-97 Location built - WORT

9-02-97 Drld 308' of surface hole, ran 7 jts 8 5/8 24# J55 csg set @304.20', cem w/125 sx Prem 2% CC, well is WO Chandler rig

9-17-97 Well dropped from drlg schedule

2121 North Lincoln • Suite 3 • Loveland, Colorado 80538 • telephone: 970.669.2211 • fax: 970.669.1040

DIVISION OF OIL, GAS AND MINING

ENTITY ACTION FORM - FORM 6

OPERATOR BARRETT RESOURCES CORP.

ADDRESS 1515 ARAPAHOE ST., TOWER 3, #1000
DENVER, CO 80202

OPERATOR ACCT. NO. N 9305

ACTION CODE	CURRENT ENTITY NO.	NEW ENTITY NO.	API NUMBER	WELL NAME	WELL LOCATION QQ	SC	TP	RG	COUNTY	SPUD DATE	EFFECTIVE DATE
A	99999	12235	43-013-31912	UTE TRIBAL 1-26	WNE NE	26	5S	5W	DUCHESNE	9/2/97	

WELL 1 COMMENTS:
Entity added 9-24-97. Lc

WELL 2 COMMENTS:

WELL 3 COMMENTS:

WELL 4 COMMENTS:

WELL 5 COMMENTS:

RECEIVED
SEP 24 1997
DIV. OF OIL, GAS & MINING

ACTION CODES (See instructions on back of form)
- A - Establish new entity for new well (single well only)
- B - Add new well to existing entity (group or unit well)
- C - Re-assign well from one existing entity to another existing entity
- D - Re-assign well from one existing entity to a new entity
- E - Other (explain in comments section)

NOTE: Use COMMENT section to explain why each Action Code was selected.

(3/89)

Greg Davis
Signature

Production Services Supvr
Title

9/18/97
Date

Phone No. (303) 572-3900

Form 3160-3
(November 1983)
(formerly 9-331C)

SUBMIT IN TRIPLICATE*
(Other instructions on reverse)

Form approved.
Budget Bureau No. 1004-0136
Expires August 31, 1985

UNITED STATES
DEPARTMENT OF THE INTERIOR
BUREAU OF LAND MANAGEMENT

APPLICATION FOR PERMIT TO DRILL, DEEPEN, OR PLUG BACK

5. LEASE DESIGNATION AND SERIAL NO.: 14-20-H62-3444

6. IF INDIAN, ALLOTTEE OR TRIBE NAME:

1a. TYPE OF WORK: DRILL [X] DEEPEN [ ] PLUG BACK [ ]

b. TYPE OF WELL: OIL WELL [XX] GAS WELL [ ] OTHER — SINGLE ZONE [ ] MULTIPLE ZONE [ ]

7. UNIT AGREEMENT NAME:

8. FARM OR LEASE NAME:

2. NAME OF OPERATOR: BARRETT RESOURCES CORPORATION

9. WELL NO.: UTE TRIBAL 1-26

3. ADDRESS OF OPERATOR: PO BOX 290 * NEOLA, UTAH * 84053

10. FIELD AND POOL, OR WILDCAT:

4. LOCATION OF WELL (Report location clearly and in accordance with any State requirements.*)
At surface: NE ¼, NE ¼, 500 FNL, 468' FWL, SEC 26, T5S, R5W
At proposed prod. zone

11. SEC., T., R., M., OR BLK. AND SURVEY OR AREA: SEC 26, T5S, R5W

14. DISTANCE IN MILES AND DIRECTION FROM NEAREST TOWN OR POST OFFICE*: 24.4 MILES SOUTH OF MYTON, UTAH

12. COUNTY OR PARISH: DUCHESNE — 13. STATE: UTAH

15. DISTANCE FROM PROPOSED* LOCATION TO NEAREST PROPERTY OR LEASE LINE, FT. (Also to nearest drlg. unit line, if any)	16. NO. OF ACRES IN LEASE	17. NO. OF ACRES ASSIGNED TO THIS WELL
468'	640'	40 ACRES
18. DISTANCE FROM PROPOSED LOCATION* TO NEAREST WELL, DRILLING, COMPLETED, OR APPLIED FOR, ON THIS LEASE, FT.	**19. PROPOSED DEPTH**	**20. ROTARY OR CABLE TOOLS**
5,000'	5650'	ROTARY

21. ELEVATIONS (Show whether DF, RT, GR, etc.): 6732'

22. APPROX. DATE WORK WILL START*: JULY 15, 1997

23. PROPOSED CASING AND CEMENTING PROGRAM

SIZE OF HOLE	SIZE OF CASING	WEIGHT PER FOOT	SETTING DEPTH	QUANTITY OF CEMENT
12¼	8-5/8	24	280'	TO SURFACE
7-7/8	5-1/2	15.5	5650'	CMT TOP TO COVER OIL SHALE

OPERATOR REQUESTS PERMISSION TO DRILL THE SUBJECT WELL.
PLEASE SEE THE ATTACHED 10 POINT AND THE 13 POINT SURFACE USE PLAN.

IF YOU REQUIRE ADDITIONAL INFORMATION PLEASE CONTACT:

DOUG BARONE
PO BOX 290
NEOLA, UT 84053

OFFICE: 801-353-4625 CELLULAR: 801-828-6116

RECEIVED
JUN 25 1997
RECEIVED
JUL 01 1998
DIV. OF OIL, GAS & MINING

IN ABOVE SPACE DESCRIBE PROPOSED PROGRAM: If proposal is to deepen or plug back, give data on present productive zone and proposed new productive zone. If proposal is to drill or deepen directionally, give pertinent data on subsurface locations and measured and true vertical depths. Give blowout preventer program, if any.

24.

SIGNED D. D. Barone TITLE PRODUCTION SUPERVISOR DATE JUNE 23, 1997

(This space for Federal or State office use)

PERMIT NO. 43-013-31912 APPROVAL DATE

APPROVED BY Edwin I. Forsman TITLE ACTING Assistant Field Manager Mineral Resources DATE JUL 08 1997

CONDITIONS OF APPROVAL, IF ANY:

NOTICE OF APPROVAL

CONDITIONS OF APPROVAL ATTACHED

*See Instructions On Reverse Side

Title 18 U.S.C. Section 1001, makes it a crime for any person knowingly and willfully to make to any department or agency of the United States any false, fictitious or fraudulent statements or representations as to any matter within its jurisdiction.

UT080-7M-312

FORM 3160-5
(JUNE 1990)

UNITED STATES
DEPARTMENT OF THE INTE[illegible]
BUREAU OF LAND MANAG[illegible]NT

FORM APPROVED
Budget Bureau No. 1004-0135
Expires: March 31, 1993

SUNDRY NOTICES AND REPORTS ON WELLS

Do not use this form for proposals to drill or to deepen or reentry to a different reservoir.
Use "APPLICATION FOR PERMIT--" for such proposals

SUBMIT IN TRIPLICATE

5. [illegible]Designation and Serial No.
UTE 14-20-H62-3444

6. If Indian, Alottee or Tribe Name
UTE TRIBE

7. If Unit or CA, Agreement Designation

1. Type of Well
[X] Oil Well [ ] Gas Well [ ] Other

8. Well Name and No.
UTE TRIBAL 1-26

2. Name of Operator
BARRETT RESOURCES CORPORATION

9. API Well No.
43-013-31912

3. Address and Telephone No.
1515 ARAPAHOE ST, TOWER 3, #1000, DENVER, CO 80202 (303) 572-3900

10. Field and Pool, or Exploratory Area
BRUNDAGE CANYON

4. Location of Well (Footage, Sec., T., R., M., or Survey Description)
500' FNL 468' FEL
NENE SECTION 26-T5S-R5W

11. County or Parish, State
DUCHESNE COUNTY/UTAH

12. CHECK APPROPRIATE BOX(s) TO INDICATE NATURE OF NOTICE, REPORT, OR OTHER DATA

TYPE OF SUBMISSION	TYPE OF ACTION	
[X] Notice of intent	[ ] Abandonment	[ ] Change of plans
[ ] Subsequent Report	[ ] Recompletion	[ ] New Construction
[ ] Final Abandonment Notice	[ ] Plugging Back	[ ] Non-Routine Fracturing
	[ ] Casing Repair	[ ] Water Shut-Off
	[ ] Altering Casing	[ ] Conversion to Injection
	[X] Other REQUEST TA STATUS	[ ] Dispose Water

use as WCR for TS

(Note: Report results of multiple completion on Well Completion or Recompletion Report and Log form.)

13. Describe Proposed or Completed Operations (Clearly state all pertinent details, and give pertinent dates, inclucing estimated date of starting any proposed work. If well is directionally drilled, give subsurface locations and measured and true vertical depths for all markers and zones pertinent to this work.)*

THE SUBJECT WELL WAS SPUD 9/2/97. 24# 8 5/8" SURFACE CASING WAS SET AT 304.20' WITH 125 SX CMT.
THE WELL WAS THEN DROPPED FROM BARRETT'S DRILLING SCHEDULE DUE TO ECONOMICS.
WHEN OIL PRICES MAKE THIS WELL ECONOMICAL TO DRILL, IT WILL BE RE-ENTERED AND DRILLED.
UNTIL THAT TIME BARRETT REQUESTS THAT THE WELL BE GIVEN TEMPORARILY ABANDON STATUS.

TD - 308' per Sundry Dated 9/22/97 / CHD

14. I hereby certify that the foregoing is true and correct

Signed Greg Davis TITLE PRODUCTION SERVICES SUPERVISOR Date 12/29/98

(This space for Federal or State office use)

Approved by _____ Title _____ Date _____

Conditions of approval, if any:

Title 18 U.S.C. Section 1001, makes it a crime for any person knowingly and willfully to make to any department or agency of the United States any false, fictitious or fraudulen statements or representations as to any matter within its jurisdiction.

*See Instruction on Reverse Side

FORM 9

STATE OF UTAH
DIVISION OF OIL, GAS, AND MINING

SUNDRY NOTICES AND REPORTS ON WELLS

Do not use this form for proposals to drill new wells, deepen existing wells, or to re-enter plugged and abandoned wells.
Use APPLICATION FOR PERMIT TO DRILL OR DEEPEN form for such proposals.

5. Lease Designation and Serial Number:

6. If Indian, Allottee or Tribe Name:

7. Unit Agreement Name:

1. Type of Well: OIL ☐ GAS ☐ OTHER:

8. Well Name and Number:

2. Name of Operator:
BARRETT RESOURCES CORPORATION

9. API Well Number:
43:013:31912

3. Address and Telephone Number:
1515 ARAPAHOE ST., TOWER 3, #1000, DENVER, CO 80202 (303) 572-3900

10. Field and Pool, or Wildcat:

4. Location of Well:
Footages:
QQ, Sec., T., R., M.:

County:
State: UTAH

11. CHECK APPROPRIATE BOXES TO INDICATE NATURE OF NOTICE, REPORT, OR OTHER DATA

NOTICE OF INTENT (Submit in Duplicate)		SUBSEQUENT REPORT (Submit Original Form Only)	
☐ Abandon	☐ New Construction	☐ Abandon	☐ New Construction
☐ Repair Casing	☐ Pull or Alter Casing	☐ Repair Casing	☐ Pull or Alter Casing
☐ Change of Plans	☐ Recomplete	☐ Change of Plans	☐ Reperforate
☐ Convert to Injection	☐ Reperforate	☐ Convert to Injection	☐ Vent or Flare
☐ Fracture Treat or Acidize	☐ Vent or Flare	☐ Fracture Treat or Acidize	☐ Water Shut-Off
☐ Multiple Completion	☐ Water Shut-Off	☒ Other ANNUAL STATUS REPORT OF SHUT=IN WELLS	
☐ Other			

Approximate date work will start

Date of work completion

Report results of Multiple Completions and Recompletions to different reservoirs on WELL COMPLETION OR RECOMLEPTION REPORT AND LOG form.

* Must be accompanied by a cement verification report.

12. DESCRIBE PROPOSED OR COMPLETED OPERATIONS (Clearly state all pertinent details, and give pertinent dates. If well is directionally drilled, give subsurface locations and measured and true vertical depths for all markers and zones pertinent to this work.)

SEE ATTACHED LIST

RECEIVED
JAN 24 2000
DIVISION OF
OIL, GAS AND MINING

13

Name & Signature: Greg Davis Title: PRODUCTION SERVICES SUPVR Date: 01/19/00

(This space for Federal or State office use)

(4/94) (See instructions on reverse Side)

WELL NAME		QTR QTR SEC-T-R	API NUMBER	LAST PRODUCED	REASON FOR SHUT-IN OR TA'D WELL	FUTURE PLANS FOR WELL
JOHN 1-3B2		NESW 3-2S-2W	43-013-30160	Sep-94	UNECONOMIC PRODUCTION	Sold to Coastal Oil & Gas Corp. 12/99
KENDALL 1-12A2		SWSW 12-1S-2W	43-013-30013	Dec-93	UNECONOMIC PRODUCTION	Sold to Coastal Oil & Gas Corp. 12/99
LAMICQ URRUTY 1-8A2		NWSW 8-1S-5W	43-013-30036	Dec-91	UNECONOMIC PRODUCTION	Sold to Coastal Oil & Gas Corp. 12/99
MEAGHER EST. 1-4B2		NWSE 4-2S-2W	43-013-30313	Feb-93	UNECONOMIC PRODUCTION	Sold to Coastal Oil & Gas Corp. 12/99
MOON TRIBAL 1-30C4		SESE 30-3S-4W	43-013-30576	Oct-96	UNECONOMIC PRODUCTION	Sold to Coastal Oil & Gas Corp. 12/99
MORTENSEN 2-32A2		NWSE 32-1S-2W	43-013-30929	Mar-91	UNECONOMIC PRODUCTION	Sold to Coastal Oil & Gas Corp. 12/99
MYRIN RANCH 1-13B4		NENE 13-2S-4W	43-013-30180	May-92	UNECONOMIC PRODUCTION	Sold to Coastal Oil & Gas Corp. 12/99
NORLING 1-9B1		NESE 33-1S-2W	43-013-30315	May-92	UNECONOMIC PRODUCTION	Sold to Coastal Oil & Gas Corp. 12/99
PHILLIPS FEDERAL 1-3C5		NENW 3-3S-5W	43-013-30333	Sep-93	UNECONOMIC PRODUCTION	Sold to Coastal Oil & Gas Corp. 12/99
REESE 1-10B2		SENW 10-2S-2W	43-013-30215	Aug-92	UNECONOMIC PRODUCTION	Sold to Coastal Oil & Gas Corp. 12/99
ROBERTSON 1-29A2		SENW 29-1S-2W	43-013-30189	Jun-95	UNECONOMIC PRODUCTION	Sold to Coastal Oil & Gas Corp. 12/99
UTE 1-2B2		NESW 2-2S-2W	43-013-30225	Jul-88	UNECONOMIC PRODUCTION	Sold to Coastal Oil & Gas Corp. 12/99
SALERATUS WASH 1-7C5		SWNE 7-3S-5W	43-013-30098	Sep-94	UNECONOMIC PRODUCTION	Sold to Coastal Oil & Gas Corp. 12/99
SHISLER 1-3B1		NWSE 3-2S-1W	43-013-30249	May-90	UNECONOMIC PRODUCTION	Sold to Coastal Oil & Gas Corp. 12/99
SPRING HOLLOW 4-36Z3		NESW 36-1N-3W	43-013-30398	Feb-84	UNECONOMIC PRODUCTION	Sold to Coastal Oil & Gas Corp. 12/99
STATE 1-6B1E		NWSE 6-2S-1E	43-047-30169	Dec-94	UNECONOMIC PRODUCTION	Sold to Coastal Oil & Gas Corp. 12/99
STATE 1-7B1E		NWSE 7-2S-1E	43-047-30180	Oct-96	UNECONOMIC PRODUCTION	Sold to Coastal Oil & Gas Corp. 12/99
STATE 2-35A2		SENW 35-1S-2W	43-013-30156	Sep-91	UNECONOMIC PRODUCTION	Sold to Coastal Oil & Gas Corp. 12/99
SUMMERELL EST. 1-30A1		NWSE 30-1S-1W	43-013-30250	Sep-91	UNECONOMIC PRODUCTION	Sold to Coastal Oil & Gas Corp. 12/99
TODD 1-2B1		NWSE 2-2S-1W	43-047-30167	Dec-93	UNECONOMIC PRODUCTION	Sold to Coastal Oil & Gas Corp. 12/99
UTE TRIBAL 1-26	BC	NENE 26-5S-5W	43-013-31912	N/A		Lease HBP; reviewing utility of wellbore in pending waterflood operation
URRUTY 2-9A2		NESW 9-1S-2W	43-013-30046	Apr-94	UNECONOMIC PRODUCTION	Sold to Coastal Oil & Gas Corp. 12/99
UTE 1-2A3		NWSE 2-1S-3W	43-013-30409	Jun-96	UNECONOMIC PRODUCTION	Sold to Coastal Oil & Gas Corp. 12/99
UTE 1-2C5		NWNW 2-3S-5W	43-013-30392	Sep-92	UNECONOMIC PRODUCTION	Sold to Coastal Oil & Gas Corp. 12/99
UTE TRIBAL 15-16	BC	SWSE 16-5S-4W	43-013-31648	Nov-98		Lease HBP; reviewing utility of wellbore in pending waterflood operation
UTE 1-5C5		NWNE 5-3S-5W	43-013-20260	Jan-79	UNECONOMIC PRODUCTION	Sold to Coastal Oil & Gas Corp. 12/99
UTE 6-7B3		SWNE 7-2S-3W	43-013-30211	Sep-94	UNECONOMIC PRODUCTION	Sold to Coastal Oil & Gas Corp. 12/99
UTE TRIBAL 1-25C6		SWNE 25-3S-6W	43-013-30417	Sep-94	UNECONOMIC PRODUCTION	Sold to Coastal Oil & Gas Corp. 12/99
UTE TRIBAL 1-3C6		SWSE 3-3S-6W	43-013-30415	Sep-93	UNECONOMIC PRODUCTION	Sold to Coastal Oil & Gas Corp. 12/99
TRIBAL FEDERAL 1-34B6		SWSE 34-2S-6W	43-013-30431	Oct-96	UNECONOMIC PRODUCTION	Sold to Coastal Oil & Gas Corp. 12/99
UTE TRIBAL 1-36C6		NENE 36-3S-6W	43-013-30422	Oct-96	UNECONOMIC PRODUCTION	Sold to Coastal Oil & Gas Corp. 12/99
UTE TRIBAL 1-5C4		SENE 5-3S-4W	43-013-30532	Aug-94	UNECONOMIC PRODUCTION	Sold to Coastal Oil & Gas Corp. 12/99
UTE TRIBAL 2-13C6		NESW 13-3S-6W	43-013-30530	Sep-96	UNECONOMIC PRODUCTION	Sold to Coastal Oil & Gas Corp. 12/99
YACK 1-7A1		NESW 7-1S-1W	43-013-30018	Nov-95	UNECONOMIC PRODUCTION	Sold to Coastal Oil & Gas Corp. 12/99

RECEIVED
JAN 24 2000
DIVISION OF
OIL, GAS AND MINING

WELL NAME	QTR QTR SEC-T-R	API NUMBER	LAST PRODUCED	REASON FOR SHUT-IN OR TA'D WELL	FUTURE PLANS FOR WELL
UTE 1-10A3	SENE 10-1S-3W	43-013-30319	Feb-97	UNECONOMIC PRODUCTION	Sold to Coastal Oil & Gas Corp. 12/99
BUZZI 1-11B2	SENW 11-2S-2W	43-013-30248	May-97	UNECONOMIC PRODUCTION	Sold to Coastal Oil & Gas Corp. 12/99
SHRINE 1-10C5	NWNE 10-3S-5W	43-013-30393	Jul-97	UNECONOMIC PRODUCTION	Sold to Coastal Oil & Gas Corp. 12/99
MORTENSEN 3-32A2	SWSW 32-1S-2W	43-013-31872	Dec-98	COLLAPSED CASING	Sold to Coastal Oil & Gas Corp. 12/99
GOODRICH 1-18B2	SENW 18-2S-2W	43-013-30397	Jul-97	UNECONOMIC PRODUCTION	Sold to Coastal Oil & Gas Corp. 12/99
BOREN 1-24A2	NESW 24-1S-2W	43-013-30084	Sep-97	UNECONOMIC PRODUCTION	Sold to Coastal Oil & Gas Corp. 12/99
UTAH STATE FED 1-24B1	NWSE 24-2S-1W	43-047-30220	May-97	UNECONOMIC PRODUCTION	Sold to Coastal Oil & Gas Corp. 12/99
HAMBLIN 1-26A2	NESW 26-1S-2W	43-013-30083	Jun-97	UNECONOMIC PRODUCTION	Sold to Coastal Oil & Gas Corp. 12/99
UTE TRIBAL 1-26C6	SWNE 26-3S-6W	43-013-30412	Jun-97	UNECONOMIC PRODUCTION	Sold to Coastal Oil & Gas Corp. 12/99
BASTIAN 3-7A1	NESE 7-1S-1W	43-013-30026	Jun-97	UNECONOMIC PRODUCTION	Sold to Coastal Oil & Gas Corp. 12/99
DYE 1-29A1	NWSE 29-1S-1W	43-013-30271	Jul-97	UNECONOMIC PRODUCTION	Sold to Coastal Oil & Gas Corp. 12/99
MCELPRANG 1-31A1	NWSE 31-1S-1W	43-013-30190	Jan-97	UNECONOMIC PRODUCTION	Sold to Coastal Oil & Gas Corp. 12/99
VODA UTE 1-4C5	NWNE 4-3S-5W	43-013-30283	Jul-97	UNECONOMIC PRODUCTION	Sold to Coastal Oil & Gas Corp. 12/99
UTE TRIBAL 1-4C6	NWNE 4-3S-6W	43-013-30416	Jan-97	UNECONOMIC PRODUCTION	Sold to Coastal Oil & Gas Corp. 12/99
MARGUERITE 1-8B2	NWSE 8-2S-2W	43-013-30235	Jun-97	UNECONOMIC PRODUCTION	Sold to Coastal Oil & Gas Corp. 12/99
UTE TRIBAL 1-9C6	SWNE 9-3S-6W	43-013-30487	Jan-97	UNECONOMIC PRODUCTION	Sold to Coastal Oil & Gas Corp. 12/99
UTE TRIBAL 10-1	SENW 10-4S-5W	43-013-30088	Jul-97	UNECONOMIC PRODUCTION	Sold to Coastal Oil & Gas Corp. 12/99
UTE TRIBAL 2-11C6	NESW 11-3S-6W	43-013-30534	May-97	UNECONOMIC PRODUCTION	Sold to Coastal Oil & Gas Corp. 12/99
UTE TRIBAL 2-12C6	SWSW 12-3S-6W	43-013-30500	Jun-97	UNECONOMIC PRODUCTION	Sold to Coastal Oil & Gas Corp. 12/99
UTE TRIBAL 2-23C6	NENW 23-3S-6W	43-013-30537	May-97	UNECONOMIC PRODUCTION	Sold to Coastal Oil & Gas Corp. 12/99
UTE TRIBAL 2-2C6	SWSW 2-3S-6W	43-013-30531	May-97	UNECONOMIC PRODUCTION	Sold to Coastal Oil & Gas Corp. 12/99
MCELPRANG 2-31A1	NWSW 31-1S-1W	43-013-30836	Jul-97	UNECONOMIC PRODUCTION	Sold to Coastal Oil & Gas Corp. 12/99
URRUTY 2-34A2	SWSW 34-1S-2W	43-013-30753	Jun-97	UNECONOMIC PRODUCTION	Sold to Coastal Oil & Gas Corp. 12/99
SPRING HOLLOW 2-34Z3	NESW 34-1N-3W	43-013-30234	Apr-97	UNECONOMIC PRODUCTION	Sold to Coastal Oil & Gas Corp. 12/99
UTE TRIBAL 2-3C6	NENW 3-3S-6W	43-013-30902	Jul-97	UNECONOMIC PRODUCTION	Sold to Coastal Oil & Gas Corp. 12/99
REYNOLD 2-7B1E	SENE 7-2S-1E	43-047-31840	Jun-97	UNECONOMIC PRODUCTION	Sold to Coastal Oil & Gas Corp. 12/99
UTE TRIBAL 2-9C6	SESE 9-3S-6W	43-013-31096	May-97	UNECONOMIC PRODUCTION	Sold to Coastal Oil & Gas Corp. 12/99
CADILLAC 3-6A1	SWSE 6-1S-1W	43-013-30834	Apr-97	UNECONOMIC PRODUCTION	Sold to Coastal Oil & Gas Corp. 12/99
BASTIAN 3-7A1	NESE 7-1S-1W	43-013-30026	Apr-97	UNECONOMIC PRODUCTION	Sold to Coastal Oil & Gas Corp. 12/99
UTE TRIBAL 3-9D5	SENW 9-4S-5W	43-013-20179	Jul-97	UNECONOMIC PRODUCTION	Sold to Coastal Oil & Gas Corp. 12/99
ANDERSON 1-A-30B1	SWNE 30-2S-1W	43-013-30783	Jul-97	UNECONOMIC PRODUCTION	Sold to Coastal Oil & Gas Corp. 12/99

RECEIVED
JAN 24 2000
DIVISION OF
OIL, GAS AND MINING

WELL NAME		QTR QTR SEC-T-R	API NUMBER	LAST PRODUCED		FUTURE PLANS FOR WELL
CEDAR RIM 5		SWNE 16-3S-3W	43-013-30240	Jun-97	UNECONOMIC PRODUCTION	Sold to Coastal Oil & Gas Corp. 12/99
CEDAR RIM 6		SWNE 21-3S-6W	43-013-30243	Jun-97	UNECONOMIC PRODUCTION	Sold to Coastal Oil & Gas Corp. 12/99
CEDAR RIM 6A		CSW 21-3S-6W	43-013-31162	May-97	UNECONOMIC PRODUCTION	Sold to Coastal Oil & Gas Corp. 12/99
UTE TRIBAL 10-21	BC	NWSE 21-5S-4W	43-013-31283	Jun-97	UNECONOMIC PRODUCTION	Lease HBP; reviewing utility of wellbore in pending waterflood operation
UTE TRIBAL 13-22	BC	SWSW 22-5S-4W	43-013-31548	Jun-97	UNECONOMIC PRODUCTION	Lease HBP; reviewing utility of wellbore in pending waterflood operation
UTE TRIBAL 4-22	BC	NWNW 22-5S-4W	43-013-30755	Jun-97	UNECONOMIC PRODUCTION	Lease HBP; reviewing utility of wellbore in pending waterflood operation
UTE TRIBAL 9-23X	BC	NESE 23-5S-5W	43-013-30999	Nov-97	UNECONOMIC PRODUCTION	Lease HBP; reviewing utility of wellbore in pending waterflood operation
UTE TRIBAL 9-4B1		SENW 4-2S-1W	43-013-30194	Jul-97	UNECONOMIC PRODUCTION	Sold to Coastal Oil & Gas Corp. 12/99
UTE TRIBAL 1-30C5		SWNE 30-3S-5W	43-013-30475	Jul-97	UNECONOMIC PRODUCTION	Sold to Coastal Oil & Gas Corp. 12/99
UTE TRIBAL 5-1D5		SENW 5-4S-5W	43-013-30081	Jun-97	UNECONOMIC PRODUCTION	Sold to Coastal Oil & Gas Corp. 12/99
J. LAMICQ ST. 1-6B1		SENW 6-2S-1W	43-013-30210	Sep-87	UNECONOMIC PRODUCTION	Sold to Coastal Oil & Gas Corp. 12/99

RECEIVED
JAN 24 2000
DIVISION OF
OIL, GAS AND MINING

UTAH ANNUAL STATUS REPORT OF SHUT-IN WELLS 1999

WELL NAME		QTR QTR SEC-T-R	API NUMBER	LAST PRODUCED	REASON FOR SHUT-IN OR TA'D WELL	FUTURE PLANS FOR WELL
FEE 1-10B1E		SENW 10-2S-1E	43-047-30881	May-89	UNECONOMIC PRODUCTION	Sold to Coastal Oil & Gas Corp. 12/99
BLEY 2X-25C7		NESW 25-3S-7W	43-013-31083	na	NEVER PROD; NO ECONOMIC RESERVES	Sold to Coastal Oil & Gas Corp. 12/99
SMITH 2X-23C7		NENE 23-3S-7W	43-013-31634	na	NEVER PROD; NO ECONOMIC RESERVES	Sold to Coastal Oil & Gas Corp. 12/99
ANDERSON 1-28A2		NWSE 28-1S-2W	43-013-30150	Jul-83	UNECONOMIC PRODUCTION	Sold to Coastal Oil & Gas Corp. 12/99
BLANCHARD 1-3A2		NWSE 3-1S-2W	43-013-20316	Feb-93	UNECONOMIC PRODUCTION	Sold to Coastal Oil & Gas Corp. 12/99
BLANCHARD 2-3A2		SESW 3-1S-2W	43-013-30008	Feb-93	UNECONOMIC PRODUCTION	Sold to Coastal Oil & Gas Corp. 12/99
SMITH 1-17C5		CNE 17-3S-5W	43-013-30188	Nov-98	UNECONOMIC PRODUCTION	Sold to Coastal Oil & Gas Corp. 12/99
CEDAR RIM 11		NWNE 27-3S-6W	43-013-30352	Apr-96	UNECONOMIC PRODUCTION	Sold to Coastal Oil & Gas Corp. 12/99
CEDAR RIM 12		SWNE 28-3S-6W	43-013-30344	Oct-89	UNECONOMIC PRODUCTION	Sold to Coastal Oil & Gas Corp. 12/99
CEDAR RIM 14		SWNE 10-3S-6W	43-013-30345	Sep-86	UNECONOMIC PRODUCTION	Sold to Coastal Oil & Gas Corp. 12/99
CEDAR RIM 16		SWNE 33-3S-6W	43-013-30363	Nov-96	UNECONOMIC PRODUCTION	Sold to Coastal Oil & Gas Corp. 12/99
CEDAR RIM 2		SWNE 20-3S-6W	43-013-30019	Aug-92	UNECONOMIC PRODUCTION	Sold to Coastal Oil & Gas Corp. 12/99
CEDAR RIM 21		SESE 10-3S-6W	43-013-31169	Oct-91	UNECONOMIC PRODUCTION	Sold to Coastal Oil & Gas Corp. 12/99
CEDAR RIM 5A		SESW 16-3S-6W	43-013-31170	Feb-96	UNECONOMIC PRODUCTION	Sold to Coastal Oil & Gas Corp. 12/99
CEDAR RIM 8		SWNE 22-3S-6W	43-013-30257	Oct-96	UNECONOMIC PRODUCTION	Sold to Coastal Oil & Gas Corp. 12/99
CHENEY 1-33A2		SWNE 33-1S-2W	43-013-30202	May-94	UNECONOMIC PRODUCTION	Sold to Coastal Oil & Gas Corp. 12/99
CHENEY 2-33A2		NESE 33-1S-2W	43-013-31042	Dec-93	UNECONOMIC PRODUCTION	Sold to Coastal Oil & Gas Corp. 12/99
CAMPBELL 1-12B2		SWNE 12-2S-2W	43-013-30237	Dec-93	UNECONOMIC PRODUCTION	Sold to Coastal Oil & Gas Corp. 12/99
SMITH 1-6C5		NWNE 6-3S-5W	43-013-30163	Apr-92	UNECONOMIC PRODUCTION	Sold to Coastal Oil & Gas Corp. 12/99
DUCHESNE COUNTY 1-3C4		SENW 3-3S-4W	43-013-30065	Oct-96	UNECONOMIC PRODUCTION	Sold to Coastal Oil & Gas Corp. 12/99
DUCHESNE 1-17C4		NWNE 17-3S-4W	43-013-30410	Mar-82	UNECONOMIC PRODUCTION	Sold to Coastal Oil & Gas Corp. 12/99
JENSEN FENZEL 1-20C5		SWNE 20-3S-5W	43-013-30177	Feb-86	UNECONOMIC PRODUCTION	Sold to Coastal Oil & Gas Corp. 12/99
ESTHER ARHI 1-5B1E		NWSW 5-2S-1E	43-047-30205	Mar-98	UNECONOMIC PRODUCTION	Sold to Coastal Oil & Gas Corp. 12/99
HORROCKS 1-6A1		SENW 6-1S-1W	43-013-30390	May-84	UNECONOMIC PRODUCTION	Sold to Coastal Oil & Gas Corp. 12/99
VODA 1-19C5		SWNE 19-3S-5W	43-013-30382	Dec-81	UNECONOMIC PRODUCTION	Sold to Coastal Oil & Gas Corp. 12/99
UTE TRIBAL 2-21G	BC	NWNE 21-5S-4W	43-013-31313	na	NEVER PROD; NO ECONOMIC RESERVES	Lease HBP; reviewing utility of wellbore in pending waterflood operation

RECEIVED
JAN 24 2000
DIVISION OF
OIL, GAS AND MINING

Form 3160-5
(November, 1996)

UNITED STATES
DEPARTMENT OF THE INTERIOR
BUREAU OF LAND MANAGEMENT

FORM APPROVED
OMB No. 1004-0135
Expires: July 31, 1996

SUNDRY NOTICES AND REPORTS ON WELLS

Do not use this form for proposals to drill or to re-enter an abandoned well. Use Form 3160-3 (APD) for such proposals

SUBMIT IN TRIPLICATE-Other Instructions on the reverse side

5. Lease Serial No.: UTE 14-20-H62-3444

6. If Indian, Allottee, or Tribe Name: UTE TRIBE

7. If Unit or CA. Agreement Designation:

1. Type of Well: [X] Oil Well [ ] Gas Well [ ] Other

8. Well Name and No.: UTE TRIBAL 1-26

2. Name of Operator: Barrett Resources Corporation

9. API Well No.: 43-013-31912

3. Address: 1515 Arapahoe Street, Tower 3, Suite 1000, Denver, Colorado 80202

3b. Phone No. *(include area code)*: (303) 572-3900

10. Field and Pool, or Exploratory Area: BRUNDAGE CANYON

4. Location of Well *(Footage, Sec., T.,R,M., or Survey Description)*: 500' FNL x 468' FEL, NE/4 NE/4 Section 26-T5S-R5W

11. County or Parish, State: DUCHESNE COUNTY, UTAH

12. CHECK APPROPRIATE BOX(S) TO INDICATE NATURE OF NOTICE, REPORT, OR OTHER DATA

TYPE OF SUBMISSION	TYPE OF ACTION			
[ ] Notice of Intent	[ ] Acidize	[ ] Deepen	[ ] Production (Start/Resume)	[ ] Water Shut-off
	[ ] Altering Casing	[ ] Fracture Test	[ ] Reclamation	[ ] Well Integrity
[X] Subsequent Report	[ ] Casing Repair	[ ] New Construction	[ ] Recomplete	[X] Other NOTICE OF SPUD
	[ ] Change Plans	[ ] Plug and Abandon	[ ] Temporarily Abandon	
[ ]	[ ] Convert to Injection	[ ] Plug Back	[ ] Water Disposal	

13. Describe Proposed or Completed Operation (clearly state all pertinent details including estimated starting date of any proposed work and approximate duration thereof. If the proposal is to deepen directionally or recomplete horizontally, give subsurface locations and measured and true vertical depths or pertinent markers and sands. Attach the Bond under which the work be will performed or provide the Bond No. on file with the BLM/BIA. Required subsequent reports shall be filed within 30 days following completion of the involved operations. If the operation results in a multiple completion or recompletion in a new interval, a Form 3160-4 shall be filed once testing has been completed. Final abandonment Notice shall be filed only after all requirements, including reclamation, have been completed, and the operator has determined that the site is ready for final inspection.)

THIS WELL WAS ORIGINALLY SPUD 9/2/97 AND THEN GIVEN TEMPORARILY ABANDONED STATUS 12/29/98. 24#, 8-5/8" SURFACE CASING WAS SET ON THIS WELL AT 304.2' WITH 125 SACKS OF CEMENT.

PLEASE BE ADVISED THAT BARRETT HAS NOW RE-ENTERED THIS WELL EFFECTIVE AUGUST 9, 2000 IN ORDER TO DRILL TO A PROPOSED TOTAL DEPTH OF 5,649'.

14. I hereby certify that the foregoing is true and correct.

Name *(Printed/ Typed)*: Debra K. Stanberry, Mgr, D & K Permitting, LLC

Title: AGENT for Barrett Resources Corporation

Signature: Debra K. Stanberry

Date: 8/10/00

Approved by

Title

Date

Conditions of approval, if any are attached. Approval of this notice does not warrant or certify that the applicant holds legal or equitable title to those rights in the subject lease which would entitle the applicant to conduct operations thereon.

Office

Accepted by the Utah Division of Oil, Gas and Mining

FOR RECORD ONLY

Title 18 U.S.C. Section 1001, makes it a crime for any person knowingly and willfully to make any department or agency of the United States any false, fictitious fraudulent statements or representations as to any matter within its jurisdiction.

(Instructions on reverse)

RECEIVED
AUG 14 2000
DIVISION OF
OIL, GAS AND MINING

DIVISION OF OIL, GAS AND MINING

ENTITY ACTION FORM - FORM 6

OPERATOR BARRETT RESOURCES CORPORATION OPERATOR ACCT. NO. N 9305

ADDRESS 1515 Arapahoe Street, Tower 3, Suite 1000

Denver, Colorado 80202-2110

ACTION CODE	CURRENT ENTITY NO.	NEW ENTITY NO.	API NUMBER	WELL NAME	WELL LOCATION QQ	SC	TP	RG	COUNTY	SPUD DATE	EFFECTIVE DATE
E			43-013-31912	UTE TRIBAL 1-26	NENE	26	5S	5W	Duchesne	**	

WELL 1 COMMENTS: **THIS WELL WAS ORIGINALLY SPUD 9/2/97 AND THEN GIVEN TEMPORARILY ABANDONED STATUS 12/29/98. 24#, 8-5/8" SURFACE CASING WAS SET ON THIS WELL AT 304.2' WITH 125 SACKS OF CEMENT. BARRETT HAS RE-ENTERED THIS WELL 8/9/00 IN ORDER TO DRILL TO A PROPOSED TD OF 5649'.

WELL 2 COMMENTS:

WELL 3 COMMENTS:

WELL 4 COMMENTS:

WELL 5 COMMENTS:

ACTION CODES (See instructions on back of form)
- A - Establish new entity for new well (single well only)
- B - Add new well to existing entity (group or unit well)
- C - Re-assign well from one existing entity to another existing entity
- D - Re-assign well from one existing entity to a new entity
- E - Other (explain in comments section)

NOTE: Use COMMENT section to explain why each Action Code was selected.

(3/89)

RECEIVED

AUG 14 2000

DIVISION OF
OIL, GAS AND MINING

Signature Debra K. Stanberry

Manager, D & K Permitting, LLC
AGENT for Barrett Resources Corp.
Title Date

Phone No. (303) 606-4261

Form 3160-R
(November 1983)
(formerly 9-330)

UNITED STATES
DEPARTMENT OF THE INTERIOR
BUREAU OF LAND MANAGEMENT

SUBMIT IN DUPLICATE* (See other instructions on reverse side)

Form approved.
Budget Bureau No. 1004-0137
Expires: December 31, 1991

5. LEASE, DESIGNATION AND SERIAL NO.: UTE 14-20-H62-3444
6. IF INDIAN, ALLOTTEE OR TRIBE NAME: UTE TRIBE

WELL COMPLETION OR RECOMPLETION REPORT AND LOG*

1a. TYPE OF WELL: OIL WELL [ ] GAS WELL [X] DRY [ ] OTHER
7. UNIT AGREEMENT NAME

b. TYPE OF COMPLETION: NEW WELL [X] WORK OVER [ ] DEEP-EN [ ] PLUG BACK [ ] DIFF. RESVR. [ ] OTHER
8. FARM OR LEASE NAME: UTE TRIBE 1-26

2. NAME OF OPERATOR: Barrett Resources Corporation
9. API WELL NO.: 43-013-31912

3. ADDRESS OF OPERATOR: 1515 Arapahoe St., Tower 3, Ste., #1000, Denver, CO 80202 (303)606-4261
10. FIELD AND POOL, OR WILDCAT: Brundage Canyon

4. LOCATION OF WELL (Report location clearly and in accordance with any State requirements)*
At surface: 500' FNL x 468' FEL
At top prod. interval reported below
At total depth
11. SEC., T., R., M., OR BLOCK AND SURVEY OR AREA: NE NE Sec 26-T5S-R5W

14. PERMIT NO. (PER BLM LETTER DATED 6/22/00) — DATE ISSUED: 7/8/97
12. COUNTY OR PARISH: DUCHESNE
13. STATE: WY

15. DATE SPUDDED	16. DATE T.D. REACHED	17. DATE COMP. (Ready to prod.)	18. ELEVATIONS (DF, RKB, RT, GR, ETC.)*	19. ELEV. CASINGHEAD
~~9-2-97~~ re-entered 8/9/00	8/17/00	9/7/00	6732' ungraded GR	

20. TOTAL DEPTH, MD & TVD	21. PLUG, BACK T.D., MD & TVD	22. IF MULTIPLE COMPL., HOW MANY*	23. INTERVALS DRILLED BY	ROTARY TOOLS	CABLE TOOLS
5,670'	5681'		--------->	X	-

24. PRODUCING INTERVAL (S), OF THIS COMPLETION -- TOP, BOTTOM, NAME (MD AND TVD)*
Lower Green River top = 4600'
Producing Interval = 4,600' - 5,423'
25. WAS DIRECTIONAL SURVEY MADE: NO

26. TYPE ELECTRIC AND OTHER LOGS RUN: Neutron Litho Density/Array Induction/Gamma Ray 9-5-00 CBL - 10-2-00
27. WAS WELL CORED: No

28. CASING RECORD (Report all strings set in well)

CASING SIZE	WEIGHT, LB./FT.	DEPTH SET (MD)	HOLE SIZE	CEMENTING RECORD	AMOUNT PULLED
8-5/8"	24#	304.2'	11"	125 SX	
5-1/2"	15.5#	5660.34'	7-7/8"	696 SX	

29. LINER RECORD

SIZE	TOP (MD)	BOTTOM (MD)	SACKS CEMENT*	SCREEN (MD)

30. TUBING RECORD

SIZE	DEPTH SET (MD)	PACKER SET (MD)
2-7/8"	4,353'	

31. PERFORATION RECORD (Interval, size and number)

5,329 - 5,423'	48 holes
5,254 - 5,295'	40 holes
5,160 - 5,169'	36 holes
5,123 - 5,137'	56 holes

See ATT SHEET

32. ACID, SHOT, FRACTURE, CEMENT SQUEEZE, ETC.

DEPTH INTERVAL (MD)	AMOUNT AND KIND OF MATERIAL USED
5254-5423'	87,000# sand; 952.2 bbls fluid
	TAILED w/250 gal 7-1/2% HCL middle & upper zone perfs
5123-5169'	83,000# sand; 925.4 bbls fluid

33.* PRODUCTION

DATE FIRST PRODUCTION	PRODUCTION METHOD (Flowing, gas lift, pumping--size and type of pump)	WELL STATUS (Producing or shut-in)
9/7/00	Pumping	Producing

DATE OF TEST	HOURS TESTED	CHOKE SIZE	PROD'N. FOR TEST PERIOD	OIL--BBL.	GAS--MCF.	WATER--BBL.	GAS-OIL RATIO
9/20/00	24	2/64"					
~~FLOW. TUBING PRESS.~~	~~CASING PRESSURE~~	~~CALCULATED~~ 24-HOUR RATE	~~OIL--BBL.~~	~~GAS--MCF.~~	~~WATER--BBL.~~		~~OIL GRAVITY-API (CORR.)~~
60#	640#	--------->	70	260	7		

34. DISPOSITION OF GAS (Sold, used for fuel, vented, etc.): Sold
TEST WITNESSED BY

35. LIST OF ATTACHMENTS: CBL

36. I hereby certify that the foregoing and attached information is complete and correct as determined from available records

SIGNED Debra K. Stanberry, Manager, D&X Permitting, LLC TITLE Agent for Barrett Resources Corp. DATE 09/28/00

*(See Instructions and Spaces for Additional Data on Reverse Side)

Title 18 U.S.C. Section 1001, makes it a crime for any person knowingly and willfully to make to any department or agency of the United States any false, fictitious or fraudulent statements or representations as to any matter within its jurisdiction.

UTE TRIBAL 1-26

31. PERFORATION RECORD (INTERVAL, SIZE AND NUMBER)		32. ACID, SHOT, FRACTURE, CEMENT SQUEEZE ETC.	
		DEPTH INTERVAL (MD)	AMOUNT AND KIND OF MATERIAL USED
4,750 - 4,761'	44 Holes	4600-4761'	50,500# sand, 543.5 bbls gel
4,600 - 4,617'	68 Holes		

OCT 02 2003

37. SUMMARY OF POROUS ZONE (Show all important zones of porosity and contents thereof; cored intervals; and all drill-stem, tests, including depth interval tested, cushion used, time tool open, flowing and shut-in pressures, and recoveries):

FORMATION	TOP	BOTTOM	DESCRIPTION, CONTENTS, ETC.

38. GEOLOGIC MARKERS

NAME	TOP	
	MEAS. DEPTH	TRUE VERT. DEPTH
Uinta	surface	
Green River	1,140'	
Mahogany	2,356'	
TGR3 Marker	3,389'	
Douglas Creek	4,162'	
Castle Peak	5,081'	
Uteland Butte Ls.	5,483'	

Form 3160-R
(November 1983)
(formerly 9-330)

Form approved.
Budget Bureau No. 1004-0137
Expires: December 31, 1991

UNITED STATES
DEPARTMENT OF THE INTERIOR
BUREAU OF LAND MANAGEMENT

SUBMIT IN DUPLICATE* (See other instructions on reverse side)

AMENDED

WELL COMPLETION OR RECOMPLETION REPORT AND LOG*

5. LEASE, DESIGNATION AND SERIAL NO.: UTE 14-20-H62-3444
6. IF INDIAN, ALLOTTEE OR TRIBE NAME: UTE TRIBE

1a. TYPE OF WELL: OIL WELL [X] GAS WELL [ ] DRY [ ] OTHER [ ]

b. TYPE OF COMPLETION: NEW WELL [X] WORK OVER [ ] DEEP-EN [ ] PLUG BACK [ ] DIFF. RESVR. [ ] OTHER [ ]

7. UNIT AGREEMENT NAME:
8. FARM OR LEASE NAME: UTE TRIBE 1-26

2. NAME OF OPERATOR: Barrett Resources Corporation
9. API WELL NO.: 43-013-31912

3. ADDRESS OF OPERATOR: 1515 Arapahoe St., Tower 3, Ste., #1000, Denver, CO 80202 (303)606-4261
10. FIELD AND POOL, OR WILDCAT: Brundage Canyon

4. LOCATION OF WELL (Report location clearly and in accordance with any State requirements)*
At surface: 500' FNL x 468' FEL
At top prod. interval reported below
At total depth
11. SEC., T., R., M., OR BLOCK AND SURVEY OR AREA: NE NE Sec 26-T5S-R5W

14. PERMIT NO.	DATE ISSUED	12. COUNTY OR PARISH	13. STATE
(PER BLM LETTER DATED 6/22/00)	7/8/97	DUCHESNE	UT

15. DATE SPUDDED	16. DATE T.D. REACHED	17. DATE COMP. (Ready to prod.)	18. ELEVATIONS (DF, RKB, RT, GR, ETC.)*	19. ELEV. CASINGHEAD
re-entered 8/9/00	8/17/00	9/7/00	6732' ungraded GR	

20. TOTAL DEPTH, MD & TVD	21. PLUG, BACK T.D., MD & TVD	22. IF MULTIPLE COMPL., HOW MANY*	23. INTERVALS DRILLED BY	ROTARY TOOLS	CABLE TOOLS
5,670'	5681'		--------->	X	-

24. PRODUCING INTERVAL (S), OF THIS COMPLETION – TOP, BOTTOM, NAME (MD AND TVD)*
Lower Green River top = 4600'
Producing Interval = 4,600' - 5,423'

25. WAS DIRECTIONAL SURVEY MADE: NO

26. TYPE ELECTRIC AND OTHER LOGS RUN: Neutron Litho Density/Array Induction/Gamma Ray

27. WAS WELL CORED: No

28. CASING RECORD (Report all strings set in well)

CASING SIZE	WEIGHT, LB./FT.	DEPTH SET (MD)	HOLE SIZE	CEMENTING RECORD	AMOUNT PULLED
8-5/8"	24#	304.2'	11"	125 SX	
5-1/2"	15.5#	5660.34'	7-7/8"	696 SX	

29. LINER RECORD

SIZE	TOP (MD)	BOTTOM (MD)	SACKS CEMENT*	SCREEN (MD)

30. TUBING RECORD

SIZE	DEPTH SET (MD)	PACKER SET (MD)
2-7/8"	4,353'	

31. PERFORATION RECORD (Interval, size and number)

5,329 - 5,423'	48 holes
5,254 - 5,295'	40 holes
5,160 - 5,169'	36 holes
5,123 - 5,137'	56 holes

32. ACID, SHOT, FRACTURE, CEMENT SQUEEZE, ETC.

DEPTH INTERVAL (MD)	AMOUNT AND KIND OF MATERIAL USED
5254-5423'	87,000# sand; 952.2 bbls fluid
	TAILED w/250 gal 7-1/2% HCL middle & upper zone perfs
5123-5169'	83,000# sand; 925.4 bbls fluid

33.* PRODUCTION

DATE FIRST PRODUCTION	PRODUCTION METHOD (Flowing, gas lift, pumping--size and type of pump)	WELL STATUS (Producing or shut-in)
9/7/00	Pumping	Producing

DATE OF TEST	HOURS TESTED	CHOKE SIZE	PROD'N. FOR TEST PERIOD	OIL--BBL.	GAS--MCF.	WATER--BBL.	GAS-OIL RATIO
9/20/00	24	2/64"					

FLOW. TUBING PRESS.	CASING PRESSURE	CALCULATED 24-HOUR RATE	OIL--BBL.	GAS--MCF.	WATER--BBL.	OIL GRAVITY-API (CORR.)
60#	640#	--------->	70	260	7	

34. DISPOSITION OF GAS (Sold, used for fuel, vented, etc.): Sold
TEST WITNESSED BY

35. LIST OF ATTACHMENTS

36. I hereby certify that the foregoing and attached information is complete and correct as determined from available records

SIGNED Debra K. Stanberry, Manager, D&K Permitting, LLC TITLE Agent for Barrett Resources Corp. DATE 01/02/01

*(See Instructions and Spaces for Additional Data on Reverse Side)

Title 18 U.S.C. Section 1001, makes it a crime for any person knowingly and willfully to make to any department or agency of the United States any false, fictitious or fraudulent statements or representations as to any matter within its jurisdiction.

37. SUMMARY OF POROUS ZONE (Show all important zones of porosity and contents thereof; cored intervals; and all drill-stem, tests, including depth interval tested, cushion used, time tool open, flowing and shut-in pressures, and recoveries):

FORMATION	TOP	BOTTOM	DESCRIPTION, CONTENTS, ETC.

38. GEOLOGIC MARKERS

NAME	TOP	
	MEAS. DEPTH	TRUE VERT. DEPTH
Uinta	surface	
Green River	1,140'	
Mahogany	2,356'	
TGR3 Marker	3,389'	
Douglas Creek	4,162'	
Castle Peak	5,081'	
Uteland Butte Ls.	5,483'	

RECEIVED
OIL, GAS & MINING

Form 3160-5
(November, 1996)

UNITED STATES
DEPARTMENT OF THE INTERIOR
BUREAU OF LAND MANAGEMENT

FORM APPROVED
OMB No. 1004-0135
Expires: July 31, 1996

SUNDRY NOTICES AND REPORTS ON WELLS

Do not use this form for proposals to drill or to re-enter an abandoned well. Use Form 3160-3 (APD) for such proposals

SUBMIT IN TRIPLICATE-Other Instructions on the reverse side

5. Lease Serial No.: UTE 14-20-H62-3444

6. If Indian, Allottee, or Tribe Name: UTE TRIBE

7. If Unit or CA. Agreement Designation:

1. Type of Well: [X] Oil Well [ ] Gas Well [ ] Other

2. Name of Operator: Barrett Resources Corporation

8. Well Name and No.: UTE TRIBAL 1-26

3. Address: 1515 Arapahoe Street, Tower 3, Suite 1000, Denver, Colorado 80202

3b. Phone No. *(include area code)*: (303) 572-3900

9. API Well No.: 43-013-31912

10. Field and Pool, or Exploratory Area: Brundage Canyon

4. Location of Well *(Footage, Sec., T.,R,M., or Survey Description)*: 468' FEL x 500' FNL, NE/4 NE/4 Section 26-T5S-R5W

11. County or Parish, State: DUCHESNE, UTAH

12. CHECK APPROPRIATE BOX(S) TO INDICATE NATURE OF NOTICE, REPORT, OR OTHER DATA

TYPE OF SUBMISSION	TYPE OF ACTION			
[ ] Notice of Intent	[ ] Acidize	[ ] Deepen	[ ] Production (Start/Resume)	[ ] Water Shut-off
	[ ] Altering Casing	[ ] Fracture Test	[ ] Reclamation	[ ] Well Integrity
[X] Subsequent Report	[ ] Casing Repair	[ ] New Construction	[ ] Recomplete	[X] Other REPORTING additional perforations
	[ ] Change Plans	[ ] Plug and Abandon	[ ] Temporarily Abandon	
[ ]	[ ] Convert to Injection	[ ] Plug Back	[ ] Water Disposal	

13. Describe Proposed or Completed Operation (clearly state all pertinent details including estimated starting date of any proposed work and approximate duration thereof. If the proposal is to deepen directionally or recomplete horizontally, give subsurface locations and measured and true vertical depths or pertinent markers and sands. Attach the Bond under which the work be will performed or provide the Bond No. on file with the BLM/BIA. Required subsequent reports shall be filed within 30 days following completion of the involved operations. If the operation results in a multiple completion or recompletion in a new interval, a Form 3160-4 shall be filed once testing has been completed. Final abandonment Notice shall be filed only after all requirements, including reclamation, have been completed, and the operator has determined that the site is ready for final inspection.)

ON NOVEMBER 7, 2000 THE FOLLOWING PERFORATIONS WERE ADDED TO THIS WELLBORE IN THE GREEN RIVER FORMATION IN ORDER TO INCREASE PRODUCTION:

5,219' - 5,235' 64 holes frac'd with 75,000# sand, 653.6 bbls fluid

End of tubing now at 5,435' and PBTD now 5516' (chased bottom of plug to 5516'; approximately 102' of fill and 93' of rat hole)

WORK COMPLETED AND WELL RETURNED TO PRODUCTION 11/11/00.

RECEIVED
MAR 23 2001
DIVISION OF
OIL, GAS AND MINING

14. I hereby certify that the foregoing is true and correct.

Name *(Printed/ Typed)*: Debra K. Stanberry Title: Permitting Specialist

Signature: Debra K. Stanberry Date: 3/19/01

Approved by	Title	Date

Conditions of approval, if any are attached. Approval of this notice does not warrant or certify that the applicant holds legal or equitable title to those rights in the subject lease which would entitle the applicant to conduct operations thereon.	Office

Title 18 U.S.C. Section 1001, makes it a crime for any person knowingly and willfully to make any department or agency of the United States any false, fictitious fraudulent statements or representations as to any matter within its jurisdiction.

(Instructions on reverse)

Form 3160-5
(November, 1996)

UNITED STATES
DEPARTMENT OF THE INTERIOR
BUREAU OF LAND MANAGEMENT

FORM APPROVED
OMB No. 1004-0135
Expires: July 31, 1996

SUNDRY NOTICES AND REPORTS ON WELLS

Do not use this form for proposals to drill or to re-enter an abandoned well. Use Form 3160-3 (APD) for such proposals

SUBMIT IN TRIPLICATE-Other Instructions on the reverse side

5. Lease Serial No.: See attached Exhibit "A"

6. If Indian, Allottee, or Tribe Name: Ute Tribe

7. If Unit or CA. Agreement Designation:

1. Type of Well: [X] Oil Well [ ] Gas Well [ ] Other

8. Well Name and No.: See attached Exhibit "A"

2. Name of Operator: Barrett Resources Corporation

9. API Well No.: See attached Exhibit "A"

3. Address: 1515 Arapahoe Street, Tower 3, Suite 1000, Denver, Colorado 80202

3b. Phone No. *(include area code)*: (303) 572-3900

10. Field and Pool, or Exploratory Area: Brundage Canyon

4. Location of Well *(Footage, Sec., T.,R,M., or Survey Description)*: See attached Exhibit "A"

11. County or Parish, State: Duchesne, Utah

12. CHECK APPROPRIATE BOX(S) TO INDICATE NATURE OF NOTICE, REPORT, OR OTHER DATA

TYPE OF SUBMISSION	TYPE OF ACTION			
[X] Notice of Intent	[ ] Acidize	[ ] Deepen	[ ] Production (Start/Resume)	[ ] Water Shut-off
	[ ] Altering Casing	[ ] Fracture Test	[ ] Reclamation	[ ] Well Integrity
[ ] Subsequent Report	[ ] Casing Repair	[ ] New Construction	[ ] Recomplete	[X] Other Change of Operator
	[ ] Change Plans	[ ] Plug and Abandon	[ ] Temporarily Abandon	
[ ]	[ ] Convert to Injection	[ ] Plug Back	[ ] Water Disposal	

13. Describe Proposed or Completed Operation (clearly state all pertinent details including estimated starting date of any proposed work and approximate duration thereof. If the proposal is to deepen directionally or recomplete horizontally, give subsurface locations and measured and true vertical depths or pertinent markers and sands. Attach the Bond under which the work be will performed or provide the Bond No. on file with the BLM/BIA. Required subsequent reports shall be filed within 30 days following completion of the involved operations. If the operation results in a multiple completion or recompletion in a new interval, a Form 3160-4 shall be filed once testing has been completed. Final abandonment Notice shall be filed only after all requirements, including reclamation, have been completed, and the operator has determined that the site is ready for final inspection.)

Effective August 2, 2001 Williams Production RMT Company purchased Barrett Resources Corporation. Barrett Resources Corporation relinquishes operatorship of the wells listed on Exhibit "A" (attached to and made part of this form) to Williams Production RMT Company. Bond coverage pursuant to 43 CFR 3104 for lease activities will continue to be provided by Flood and Peterson Insurance, Inc. under their Nationwide bond, BLM Bond No. 6101757342.

14. I hereby certify that the foregoing is true and correct.

Name *(Printed/ Typed)*: Greg Davis

Title: Permitting Supervisor

Signature: Greg Davis

Date: 8/23/01

Approved by	Title	Date

Conditions of approval, if any are attached. Approval of this notice does not warrant or certify that the applicant holds legal or equitable title to those rights in the subject lease which would entitle the applicant to conduct operations thereon.

Office

Title 18 U.S.C. Section 1001, makes it a crime for any person knowingly and willfully to make any department or agency of the United States any false, fictitious fraudulent statements or representations as to any matter within its jurisdiction.

(Instructions on reverse)

EXHIBIT "A"

WILLIAMS PRODUCTION RMT COMPANY						
UINTAH BASIN (BRUNDAGE)						
DUCHESNE CO, UTAH					FOOTAGE	
UTAH OPERATED OIL WELLS	API#	STATUS	1/4 1/4	SEC-TWP-RGE	LOCATION	UTE LEASE
UTE TRIBAL 10-21	43-013-31283	PRODUCING	NWSE	21-5S-4W	1506' FSL & 2242' FEL	14-20-H62-3414
UTE TRIBAL 11-17	43-013-32145	PRODUCING	NESW	17-5S-4W	1980' FSL & 1980' FWL	14-20-H62-4919
UTE TRIBAL 11-19	43-013-31547	PRODUCING	NESW	19-5S-4W	1764' FSL & 1796' FWL	14-20-H62-3528
UTE TRIBAL 11-20	43-013-32168	PRODUCING	NESW	20-5S-4W	2146' FSL & 1630' FWL	14-20-H62-3529
UTE TRIBAL 11-24	43-013-31909	PRODUCING	NESW	24-5S-5W	2005' FSL & 2557' FWL	14-20-H62-4749
UTE TRIBAL 11-25	43-013-31911	PRODUCING	NESW	25-5S-5W	1871' FSL & 1982' FWL	14-20-H62-3537
UTE TRIBAL 11-28	43-013-32192	PRODUCING	NESW	28-5S-4W	2322' FSL & 1920' FWL	14-20-H62-4740
UTE TRIBAL 1-19	43-013-30933	PRODUCING	NENE	19-5S-4W	521' FNL & 558' FEL	14-20-H62-4919
UTE TRIBAL 1-20	43-013-30966	PRODUCING	NENE	20-5S-4W	678' FNL & 736' FEL	14-20-H62-3529
UTE TRIBAL 12-15	43-013-32205	PRODUCING	NWSW	15-5S-4W	1997' FSL & 481' FWL	14-20-H62-4661
UTE TRIBAL 12-17	43-013-31246	PRODUCING	NWSW	17-5S-4W	2000' FSL & 600' FWL	14-20-H62-4731
UTE TRIBAL 12-22	43-013-31311	PRODUCING	NWSW	22-5S-4W	1977' FSL & 658' FWL	14-20-H62-3415
UTE TRIBAL 1-25	43-013-30945	PRODUCING	NENE	25-5S-5W	661' FNL & 520' FEL	14-20-H62-3537
UTE TRIBAL 1-26	43-013-31912	PRODUCING	NENE	26-5S-5W	500' FNL & 468' FEL	14-20-H62-3444
UTE TRIBAL 1-28	43-013-31549	PRODUCING	NENE	28-5S-4W	778' FNL & 592' FEL	14-20-H62-4740
UTE TRIBAL 1-29	43-013-30964	SI	NENE	29-5S-4W	652' FNL & 760' FEL	14-20-H62-3416
UTE TRIBAL 1-30	43-013-30948	PRODUCING	NENE	30-5S-4W	627' FNL & 542' FEL	14-20-H62-4662
UTE TRIBAL 13-17	43-013-31546	PRODUCING	SWSW	17-5S-4W	796' FSL & 645' FWL	14-20-H62-4919
UTE TRIBAL 13-19	43-013-31284	PRODUCING	SWSW	19-5S-4W	612' FSL & 635' FWL	14-20-H62-3528
UTE TRIBAL 13-22	43-013-31548	SI	SWSW	22-5S-4W	715' FSL & 838' FWL	14-20-H62-3415
UTE TRIBAL 13-24	43-013-31910	PRODUCING	SWSW	24-2S-5W	520' FSL & 1051' FWL	14-20-H62-4749
UTE TRIBAL 13-25	43-013-32169	PRODUCING	SWSW	25-5S-5W	700' FSL & 501' FWL	14-20-H62-3537
UTE TRIBAL 1-32R	43-013-30872	PRODUCING	NENE	32-5S-4W	628' FNL & 635' FEL	14-20-H62-4659
UTE TRIBAL 13-20	43-013-31662	PRODUCING	SWSW	20-5S-4W	689'FSL & 909' FWL	14-20-H62-3529
UTE TRIBAL 1-33	43-013-32185	PRODUCING	NENE	33-5S-4W	720' FNL & 796' FEL	14-20-H62-4659
UTE TRIBAL 1-34	43-013-32186	PRODUCING	NENE	34-5S-4W	1150' FNL & 544' FEL	14-20-H62-4659
UTE TRIBAL 14-15	43-013-30842	PRODUCING	SESW	15-5S-4W	793' FSL & 1847' FWL	14-20-H62-4661
UTE TRIBAL 14-17	43-013-32147	PRODUCING	SESW	17-5S-4W	908' FSL & 1621' FWL	14-20-H62-4919
UTE TRIBAL 15-16	43-013-31648	PRODUCING	SWSE	16-5S-4W	1030' FSL & 1990' FEL	14-20-H62-3413
UTE TRIBAL 15-17	43-013-31649	PRODUCING	SWSE	17-5S-4W	660' FSL & 2080' FEL	14-20-H62-4731
UTE TRIBAL 15-18	43-013-32148	PRODUCING	SWSE	18-5S-4W	748' FSL & 1836' FEL	14-20-H62-4919
UTE TRIBAL 15-19	43-013-31832	PRODUCING	SWSE	19-5S-4W	477' FSL & 1868' FEL	14-20-H62-3528
UTE TRIBAL 15-23	43-013-31671	PRODUCING	SWSE	23-5S-5W	612' FSL & 1973' FEL	14-20-H62-3443
UTE TRIBAL 15-24R	43-013-31129	PRODUCING	SWSE	24-5S-5W	1048' FSL & 1364' FEL	14-20-H62-4749
UTE TRIBAL 16-16	43-013-30841	PRODUCING	SESE	16-5S-4W	733' FSL & 768' FEL	14-20-H62-3413
UTE TRIBAL 16-18	43-013-31650	SI	SESE	18-5S-4W	636' FSL & 586' FEL	14-20-H62-4919
UTE TRIBAL 2-21	43-013-31280	PRODUCING	NWNE	21-5S-4W	759' FNL & 1978' FEL	14-20-H62-3414
UTE TRIBAL 2-25	43-013-31833	PRODUCING	NWNE	25-5S-5W	760' FNL & 2000' FEL	14-20-H62-3537
UTE TRIBAL 2-27	43-013-32179	PRODUCING	NWNE	27-5S-4W	778' FNL & 2273' FEL	14-20-H62-3375
UTE TRIBAL 2-35	43-013-32187	PRODUCING	NWNE	35-5S-5W	951' FNL & 1566' FEL	14-20-H62-4659
UTE TRIBAL 23-3R	43-013-30886	PRODUCING	NENW	23-5S-4W	603' FNL & 2386' FWL	14-20-H62-4728
UTE TRIBAL 3-19	43-013-31830	PRODUCING	NENW	19-5S-4W	546' FNL & 2183' FWL	14-20-H62-3528
UTE TRIBAL 3-25	43-013-31834	PRODUCING	NENW	25-5S-5W	464' FNL & 2174' FWL	14-20-H62-3537
UTE TRIBAL 3-26	43-013-30955	PRODUCING	NENW	26-5S-5W	612' FNL & 2121' FWL	14-20-H62-3444
UTE TRIBAL 4-22	43-013-30755	SI	NWNW	22-5S-4W	749' FNL & 432' FWL	14-20-H62-3415
UTE TRIBAL 4-27	43-013-31131	PRODUCING	NWNW	27-5S-4W	736' FNL & 693' FWL	14-20-H62-3375
UTE TRIBAL 4-30	43-013-31550	PRODUCING	NWNW	30-5S-4W	751' FNL & 740' FWL	14-20-H62-4662
UTE TRIBAL 4-36	43-013-32188	PRODUCING	NWNW	36-5S-5W	860' FNL & 660' FWL	14-20-H62-4659
UTE TRIBAL 5-13	43-013-31152	PRODUCING	SWNW	13-5S-5W	1667' FNL & 905' FWL	14-20-H62-4845
UTE TRIBAL 5-19	43-013-32204	PRODUCING	SWNW	19-5S-4W	1940' FNL & 511' FWL	14-20-H62-3528
UTE TRIBAL 5-20	43-013-31651	PRODUCING	SWNW	20-5S-4W	1856' FNL & 683' FWL	14-20-H62-4919
UTE TRIBAL 5-28	43-013-32189	PRODUCING	SWNW	28-5S-4W	1940' FNL & 508' FWL	14-20-H62-4740
UTE TRIBAL 5-31	43-013-32190	PRODUCING	SWNW	31-5S-4W	1410' FNL & 585' FWL	14-20-H62-4659
UTE TRIBAL 6-21	43-013-32164	PRODUCING	SENW	21-5S-4W	1791' FNL & 1609' FWL	14-20-H62-3414
UTE TRIBAL 6-22	43-013-32163	PRODUCING	SENW	22-5S-4W	1710' FNL & 1850' FWL	14-20-H62-3415
UTE TRIBAL 6-25H	43-013-32143	PRODUCING	SENW	25-5S-5W	2127' FNL & 2218' FWL	14-20-H62-3537
UTE TRIBAL 7-19	43-013-31282	PRODUCING	SWNE	19-5S-4W	1824' FNL & 2023' FEL	14-20-H62-4919
UTE TRIBAL 7-25	43-013-31310	PRODUCING	SWNE	25-5S-5W	1973' FNL & 2106' FEL	14-20-H62-3537
UTE TRIBAL 7-28	43-013-32166	PRODUCING	SWNE	28-5S-4W	1711' FNL & 1949' FEL	14-20-H62-4740
UTE TRIBAL 7-30	43-013-32167	PRODUCING	SWNE	30-5S-4W	1811' FNL & 1818' FEL	14-20-H62-4662
UTE TRIBAL 8-21	43-013-30829	SI	SENE	21-5S-4W	2090' FNL & 722' FEL	14-20-H62-3414
UTE TRIBAL 9-18	43-013-32144	PRODUCING	NESE	18-5S-4W	1807' FSL & 1654' FEL	14-20-H62-4919
UTE TRIBAL 9-19	43-013-31831	PRODUCING	NESE	19-5S-4W	1797' FSL & 533' FEL	14-20-H62-3528
UTE TRIBAL 9-23X	43-013-30999	SI	NESE	23-5S-5W	1830' FSL & 665' FEL	14-20-H62-3443
UTE TRIBAL 9-26	43-013-32191	PRODUCING	NESE	26-5S-4W	2118' FSL & 777' FEL	14-20-H62-4728

WILLIAMS PRODUCTION RMT COMPANY						
UINTAH BASIN (BRUNDAGE)						
DUCHESNE CO, UTAH					FOOTAGE	
UTAH OPERATED OIL WELLS	API#	STATUS	1/4 1/4	SEC-TWP-RGE	LOCATION	UTE LEASE
UTAH OPERATED GAS WELLS						
UTE TRIBAL 2-21G	43-013-31313	SI	NWNE	21-5S-4W	760' FNL & 1982' FEL	14-20-H62-3414
UTAH OPERATED WATER SUPPLY WELLS						
UTE TRIBAL 3-24WSW	43-013-	WSW	SENE	24-5S-5W	1410' FNL & 1415' FWL	14-20-H62-4659
UTE TRIBAL 9-23WSW	43-013-	WSW	NESE	23-5S-5W	1840' FSL & 715' FEL	14-20-H62-3443
UTAH OPERATED LOCATIONS						
UTE TRIBAL 16-12	43-013-30922	TO BE DRLD	SESE	12-4S-5W	522' FSL & 796' FEL	14-20-H62-4531
UTE TRIBAL 3-29	43-013-32193	DRLG	NENW	29-5S-4W	585' FNL & 1802' FWL	14-20-H62-3416
UTE TRIBAL 2-19	43-013-32140	WOC	NWNE	19-5S-4W	381' FNL & 1846' FEL	14-20-H62-3528
UTE TRIBAL 13-17-54TMM	43-013-32237	WOC	SWSW	17-5S-4W	854' FSL & 671' FWL	14-20-H62-4731
UTE TRIBAL 5-28-54TMM	43-013-32236	WOC	SWNW	28-5S-4W	1992' FNL & 560' FWL	14-20-H62-4740
UTE TRIBAL 12-15-54TMM	43-013-32251	TO BE DRLD	NWSW	15-5S-4W	1991' FSL & 418' FWL	14-20-H62-4661
UTE TRIBAL 3-28-54	43-013-32261	TO BE DRLD	NENW	28-5S-4W	660' FNL & 1980' FWL	14-20-H62-4740
UTE TRIBAL 13-18-54	43-013-32270	TO BE DRLD	SWSW	18-5S-4W	656' FSL & 657' FWL	14-20-H62-4739
UTE TRIBAL 1-24-55	43-013-32259	TO BE DRLD	NENE	24-5S-5W	583' FNL & 852' FEL	14-20-H62-4749
UTE TRIBAL 9-24-55	43-013-32268	TO BE DRLD	NESE	24-5S-5W	2392' FSL & 486' FEL	14-20-H62-4749
UTE TRIBAL 1-7R-54	43-013-30925	RE-ENTRY	NENE	7-5S-4W	508' FNL & 792' FEL	14-20-H62-
UTE TRIBAL 5-18-54	43-013-32262	TO BE DRLD	SWNW	18-5S-4W	2029' FNL & 819' FWL	14-20-H62-4739
UTE TRIBAL 7-18-54	43-013-32266	TO BE DRLD	SWNE	18-5S-4W	2123' FNL & 1968' FEL	14-20-H62-4739
UTE TRIBAL 15-25-55	43-013-32271	TO BE DRLD	SWSE	25-5S-5W	693' FSL & 2021' FEL	14-20-H62-3537
UTE TRIBAL 6-36-55	43-013-32265	TO BE DRLD	SENW	36-5S-5W	2480' FNL & 1702' FWL	14-20-H62-
UTE TRIBAL 8-35-55	43-013-32267	TO BE DRLD	SENE	35-5S-5W	2464' FNL 7 552' FEL	14-20-H62-
UTE TRIBAL 16-14-55	43-013-32272	TO BE DRLD	SESE	14-5S-5W	379' FSL & 871' FEL	14-20-H62-
UTE TRIBAL 3-24R-55	43-013-30960	RE-ENTRY	NENW	24-5S-5W	619' FNL & 2035' FWL	14-20-H62-4749
UTE TRIBAL 5-24-55	43-013-32263	TO BE DRLD	SWNW	24-5S-5W	1911' FNL & 780' FWL	14-20-H62-4749
UTE TRIBAL 11-23-55	43-013-32269	TO BE DRLD	NESW	23-5S-5W	1875' FSL & 2187' FWL	14-20-H62-3443
UTE TRIBAL 5-26-55	43-013-32264	TO BE DRLD	SWNW	26-5S-5W	1810' FNL & 465' FWL	14-20-H62-3444

United States Department of the Interior

BUREAU OF LAND MANAGEMENT
Utah State Office
P.O. Box 45155
Salt Lake City, UT 84145-0155

RECEIVED
OCT 1 6 2001
DIVISION OF
OIL, GAS AND MINING

In Reply Refer To:
3106
UTU-77321
(UT-924)

SEP 2 7 2001

NOTICE

Williams Production RMT Co.	:	Oil and Gas
Tower 3, Suite 1000	:	
1515 Arapahoe Street	:	
Denver, Colorado 80202	:	

Name Change Recognized

Acceptable evidence has been received in this office concerning the name change of Barrett Resources Corporation into Williams Production RMT Company with Williams Production RMT Company being the surviving entity.

For our purposes, the name change is recognized effective August 2, 2001.

The oil and gas lease files identified on the enclosed exhibit have been noted as to the name change. The exhibit was compiled from a list of leases obtained from our computer program. We have not abstracted the lease files to determine if the entities affected by this name change hold an interest in the leases identified nor have we attempted to identify leases where the entities are the operator on the ground maintaining no vested recorded title or operating rights interests. We will be notifying the Minerals Management Service and all applicable Bureau of Land Management offices of the change by a copy of this notice. If additional documentation for changes of operator are required by our Field Offices, you will be contacted by them.

If you identify additional leases in which the entities maintain an interest, please contact this office and we will appropriately document those files with a copy of this Notice.

Due to the name change, the name of the principal/obligor on the bond is required to be changed from Barrett Resources Corporation to Williams Production RMT Company. You may accomplish this either by consent of surety rider on the original bond or a rider to the original bond. The bonds are held in New Mexico.

Robert Lopez
Chief, Branch of
Minerals Adjudication

Enclosure
1. Exhibit of Leases (1 pp)

cc: Moab Field Office
Vernal Field Office
MMS, Reference Data Branch, MS3130, PO Box 5860, Denver CO 80217
State of Utah, DOGM, Attn: Jim Thompson (Ste. 1210), Box 145801, SLC UT 84114
Teresa Thompson (UT-922)
Joe Incardine (UT-921)

Exhibit of Leases

UTU-77321
UTU-77322
UTU-77323
UTU-77324
UTU-77325
UTU-77326
UTU-77327
UTU-77328
UTU-77329
UTU-77330
UTU-60815
UTU-76965
UTU-76966
UTU-76967
UTU-76968

Form 3160-5
(November, 1996)

UNITED STATES
DEPARTMENT OF THE INTERIOR
BUREAU OF LAND MANAGEMENT

FORM APPROVED
OMB No. 1004-0135
Expires: July 31, 1996

SUNDRY NOTICES AND REPORTS ON WELLS

Do not use this form for proposals to drill or to re-enter an abandoned well. Use Form 3160-3 (APD) for such proposals

SUBMIT IN TRIPLICATE-Other Instructions on the reverse side

5. Lease Serial No.

6. If Indian, Allottee, or Tribe Name: UTE TRIBE

7. If Unit or CA. Agreement Designation

1. Type of Well: [X] Oil Well [ ] Gas Well [ ] Other

8. Well Name and No.: UTE TRIBAL

2. Name of Operator: Williams Production RMT Company (formerly Barrett Resources Corporation)

9. API Well No.

3. Address: 1515 Arapahoe Street, Tower 3, Suite 1000, Denver, Colorado 80202

3b. Phone No. *(include area code)*: (303) 572-3900

10. Field and Pool, or Exploratory Area: BRUNDAGE CANYON

4. Location of Well *(Footage, Sec., T.,R,M., or Survey Description)*

11. County or Parish, State: DUCHESNE COUNTY, UTAH

12. CHECK APPROPRIATE BOX(S) TO INDICATE NATURE OF NOTICE, REPORT, OR OTHER DATA

TYPE OF SUBMISSION	TYPE OF ACTION			
[X] Notice of Intent	[ ] Acidize	[ ] Deepen	[ ] Production (Start/Resume)	[ ] Water Shut-off
	[ ] Altering Casing	[ ] Fracture Test	[ ] Reclamation	[ ] Well Integrity
[ ] Subsequent Report	[ ] Casing Repair	[ ] New Construction	[ ] Recomplete	[X] Other requesting approval
	[ ] Change Plans	[ ] Plug and Abandon	[ ] Temporarily Abandon	change of operator
[ ]	[ ] Convert to Injection	[ ] Plug Back	[ ] Water Disposal	SOP

13. Describe Proposed or Completed Operation (clearly state all pertinent details including estimated starting date of any proposed work and approximate duration thereof. If the proposal is to deepen directionally or recomplete horizontally, give subsurface locations and measured and true vertical depths of pertinent markers and sands. Attach the Bond under which the work be will performed or provide the Bond No. on file with the BLM/BIA. Required subsequent reports shall be filed within 30 days following completion of the involved operations. If the operation results in a multiple completion or recompletion in a new interval, a Form 3160-4 shall be filed once testing has been completed. Final abandonment Notice shall be filed only after all requirements, including reclamation, have been completed, and the operator has determined that the site is ready for final inspection.)

BARRETT RESOURCES CORPORATION RECEIVED APPROVAL OF THEIR REVISED STANDARD OPERATING PRACTICES COVERING DRILLING PLANS FOR ALL FUTURE UTE TRIBAL WELLS ON FEBRUARY 2, 2001. EFFECTIVE AUGUST 2, 2001 WILLIAMS PRODUCTION RMT COMPANY ASSUMED OPERATORSHIP OF ALL UTE TRIBAL WELLS DUE TO A MERGER OF WILLIAMS ENERGY SERVICES AND BARRETT RESOURCES CORPORATION. BOND COVERAGE PURSUANT TO 43 CFR 3104 FOR OPERATION ACTIVITIES WILL CONTINUE TO BE PROVIDED BY FLOOD AND PETERSON INSURANCE, INC. UNDER NATIONWIDE BLM BOND NO. 6101757342. WILLIAMS PRODUCTION RMT COMPANY WILL BE RESPONSIBLE FOR COMPLIANCE UNDER THE TERMS AND CONDITIONS OF THIS STANDARD OPERATING PRACTICES DOCUMENT.

Greg Davis

Greg Davis, Permitting Supervisor
Barrett Resources Corporation

14. I hereby certify that the foregoing is true and correct.

Name *(Printed/ Typed)*: Joseph P. Barrett

Title: Land Manager, Denver
William Production RMT Company

Signature

Date: 10/8/01

Approved by	Title	Date

Conditions of approval, if any are attached. Approval of this notice does not warrant or certify that the applicant holds legal or equitable title to those rights in the subject lease which would entitle the applicant to conduct operations thereon.

Office

Title 18 U.S.C. Section 1001, makes it a crime for any person knowingly and willfully to make any department or agency of the United States any false, fictitious fraudulent statements or representations as to any matter within its jurisdiction.

(Instructions on reverse)

United States Department of the Interior
BUREAU OF INDIAN AFFAIRS
Uintah and Ouray Agency
P. O. Box 130
988 South 7500 East
Fort Duchesne, Utah 84026-0130
Phone: (435) 722-4300 Fax: (435) 722-2323

IN REPLY REFER TO:
Minerals and Mining
Phone: (435) 722-4310
Fax: (435) 722-2809

January 16, 2002

Williams Production RMT Company
Attn: Fritts Rosenberger
1515 Arapahoe St., T3-1000
Denver, CO 80202

Dear Mr. Rosenberger;

We are in receipt of the corporate documentation for the merger of Barrett Resources Corporation with and into Williams Production RMT Company.

All documents appear to be in order, and the approval is hereby authorized to change all records, including change of operator of certain oil and gas wells, Rights-of-Way, Communitization Agreements, Oil and Gas Leases, and Exploration and Development Agreements from Barrett Resources Corporation with and into Williams Production RMT Company.

Approval of this name change is the date of this letter, but effective on August 2, 2001. If you have any questions, please do not hesitate to contact this office.

Respectfully,

Charlie H Cameron

Acting Superintendent

Jim Thompson

801- 359- 3940

from Pat Sakurowicz

State of Delaware

Office of the Secretary of State

I, HARRIET SMITH WINDSOR, SECRETARY OF STATE OF THE STATE OF DELAWARE, DO HEREBY CERTIFY THE ATTACHED IS A TRUE AND CORRECT COPY OF THE CERTIFICATE OF MERGER, WHICH MERGES:

"BARRETT RESOURCES CORPORATION", A DELAWARE CORPORATION,

WITH AND INTO "RESOURCES ACQUISITION CORP." UNDER THE NAME OF "WILLIAMS PRODUCTION RMT COMPANY", A CORPORATION ORGANIZED AND EXISTING UNDER THE LAWS OF THE STATE OF DELAWARE, AS RECEIVED AND FILED IN THIS OFFICE THE SECOND DAY OF AUGUST, A.D. 2001, AT 12:15 O'CLOCK P.M.

3388640 8100M

010380140

Harriet Smith Windsor

Harriet Smith Windsor, Secretary of State

AUTHENTICATION: 1278982

DATE: 08-03-01

STATE OF DELAWARE
SECRETARY OF STATE
DIVISION OF CORPORATIONS
FILED 12:15 PM 08/02/2001
010376792 – 3369640

CERTIFICATE OF MERGER
OF
BARRETT RESOURCES CORPORATION
INTO
RESOURCES ACQUISITION CORP.

Pursuant to Section 251 of the General Corporation Law of the State of Delaware

Resources Acquisition Corp., a Delaware corporation ("Acquisition"), pursuant to Section 251 of the General Corporation Law of the State of Delaware (the "DGCL"), hereby certifies as follows:

FIRST: The name and state of incorporation of each of the constituent corporations to the merger are as follows:

Barrett Resources Corporation	-	Delaware
Resources Acquisition Corp.	-	Delaware

SECOND: An Agreement and Plan of Merger (the "Merger Agreement"), dated as of May 7, 2001, by and among The Williams Companies, Inc., Acquisition and Barrett Resources Corporation ("Barrett") has been approved, adopted, certified, executed and acknowledged by each of the constituent corporations in accordance with Section 251 of the DGCL.

THIRD: Acquisition shall be the corporation surviving the merger (the "Surviving Corporation").

FOURTH: The Certificate of Incorporation of Acquisition shall be the Certificate of Incorporation of the Surviving Corporation until thereafter changed or amended as provided therein or by applicable law; provided, however, that the following changes to the Certificate of Incorporation of Acquisition shall be effected as a result of the merger:

1. Article FIRST shall be amended and restated to read as follows:

"The name of the corporation is Williams Production RMT Company."; and

2. Article SIXTH, paragraph 4, shall be amended and restated to read as follows:

"No director shall be personally liable to the Corporation or any of its stockholders for monetary damages for breach of fiduciary duty as a director, except for liability (i) for any breach of the director's duty of loyalty to the Corporation or its stockholders, (ii) for acts or omissions not in good faith or which involve intentional misconduct or a knowing violation of law, (iii) pursuant to Section 174 of the GCL or (iv) for any transaction from which the director derived an improper personal benefit. If the GCL is amended to authorize corporate action further eliminating or limiting the personal liability of directors, then the liability of directors of the Corporation shall be eliminated or limited to the fullest extent permitted by the GCL, as so amended. Any repeal or modification of this Article SIXTH by the stockholders of the Corporation shall not adversely affect any right or protection of a director of the Corporation existing at the time of such repeal or modification with respect to acts or omissions occurring prior to such repeal or modification."

3. The following paragraph shall be added to Article Sixth as paragraph 6 thereto:

"The Corporation shall fully honor and abide by the provisions set forth in Section 7.9 of the Agreement and Plan of Merger dated as of May 7, 2001 (the "Merger Agreement") by and among the The Williams Companies, Inc., the Corporation and Barrett Resources Corporation. Any repeal or modification of this paragraph 6 of this Article SIXTH by the stockholders of the Corporation shall not adversely affect any rights or protections afforded to the Indemnified Persons (as defined in the Merger Agreement) pursuant to this paragraph and Section 7.9 of the Merger Agreement."

FIFTH: The executed Merger Agreement is on file at the office of the Surviving Corporation, 1515 Arapahoe Street, Tower 3 Suite 1000, Denver, Colorado 80202.

SIXTH: A copy of the Merger Agreement will be provided by the Surviving Corporation, upon request and without cost, to any stockholder of either constituent corporation.

SEVENTH: This Certificate of Merger shall be effective upon its filing with the Secretary of State of the State of Delaware.

IN WITNESS WHEREOF, Resources Acquisition Corp. has caused this Certificate of Merger to be executed in its corporate name this 2nd day of August, 2001.

RESOURCES ACQUISITION CORP.

By: _____
Name: Steven J. Malcolm
Title: President

Division of Oil, Gas and Mining

OPERATOR CHANGE WORKSHEET

ROUTING
1. GLH
2. CDW
3. FILE

X Change of Operator (Well Sold) Designation of Agent

Operator Name Change Merger

The operator of the well(s) listed below has changed, effective: **08-02-2001**

FROM: (Old Operator):	**TO:** (New Operator):
BARRETT RESOURCES CORPORATION	WILLIAMS PRODUCTION RMT COMPANY
Address: 1515 ARAPAHOE STREET, STE 1000	Address: 1515 ARAPAHOE STREET, STE 1000
DENVER, CO 80202	DENVER, CO 80202
Phone: 1-(303)-572-3900	Phone: 1-(303)-572-3900
Account No. N9305	Account No. N1945

CA No. **Unit:**

WELL(S)

NAME	SEC TWN RNG	API NO	ENTITY NO	LEASE TYPE	WELL TYPE	WELL STATUS
UTE TRIBAL 1-26	26-05S-05W	43-013-31912	12235	INDIAN	OW	P
SOWERS CYN UTE TRIBAL 3-26	26-05S-05W	43-013-30955	10423	INDIAN	OW	P
UTE TRIBAL 5-26-55	26-05S-05W	43-013-32264	99999	INDIAN	OW	APD
UTE TRIBAL 2-35	35-05S-05W	43-013-32187	13021	INDIAN	OW	P
UTE TRIBAL 8-35-55	35-05S-05W	43-013-32267	99999	INDIAN	OW	APD
UTE TRIBAL 4-36	36-05S-05W	43-013-32188	13063	INDIAN	OW	P
UTE TRIBAL 6-36-55	36-05S-05W	43-013-32265	99999	INDIAN	OW	APD

OPERATOR CHANGES DOCUMENTATION

Enter date after each listed item is completed

1. (R649-8-10) Sundry or legal documentation was received from the **FORMER** operator on: 08/30/2001
2. (R649-8-10) Sundry or legal documentation was received from the **NEW** operator on: 08/30/2001
3. The new company has been checked through the **Department of Commerce, Division of Corporations Database on:** 02/21/2002
4. Is the new operator registered in the State of Utah: YES Business Number: PENDING-2/21/02
5. If **NO**, the operator was contacted contacted on: N/A

6. **Federal and Indian Lease Wells:** The BLM and or the BIA has approved the merger, name change, or operator change for all wells listed on Federal or Indian leases on: BLM-BIA-08/02/2001

7. **Federal and Indian Units:**
The BLM or BIA has approved the successor of unit operator for wells listed on: 08/02/2001

8. **Federal and Indian Communization Agreements ("CA"):**
The BLM or BIA has approved the operator for all wells listed within a CA on: N/A

9. **Underground Injection Control ("UIC")** The Division has approved UIC Form 5, **Transfer of Authority to Inject,** for the enhanced/secondary recovery unit/project for the water disposal well(s) listed on: N/A

DATA ENTRY:

1. Changes entered in the **Oil and Gas Database on:** 02/22/2002
2. Changes have been entered on the **Monthly Operator Change Spread Sheet on:** 02/22/2002
3. Bond information entered in RBDMS on: N/A
4. Fee wells attached to bond in RBDMS on: N/A

STATE WELL(S) BOND VERIFICATION:

1. State well(s) covered by Bond Number: N/A

FEDERAL WELL(S) BOND VERIFICATION:

1. Federal well(s) covered by Bond Number: N/A

INDIAN WELL(S) BOND VERIFICATION:

1. Indian well(s) covered by Bond Number: 6101757342

FEE WELL(S) BOND VERIFICATION:

1. (R649-3-1) The **NEW** operator of any fee well(s) listed covered by Bond Number N/A
2. The **FORMER** operator has requested a release of liability from their bond on: N/A
   The Division sent response by letter on: N/A

LEASE INTEREST OWNER NOTIFICATION:

3. (R649-2-10) The **FORMER** operator of the fee wells has been contacted and informed by a letter from the Division of their responsibility to notify all interest owners of this change on: N/A

COMMENTS:

STATE OF UTAH
DEPARTMENT OF NATURAL RESOURCES
DIVISION OF OIL, GAS AND MINING

FORM 9

SUNDRY NOTICES AND REPORTS ON WELLS

Do not use this form for proposals to drill new wells, significantly deepen existing wells below current bottom-hole depth, reenter plugged wells, or to drill horizontal laterals. Use APPLICATION FOR PERMIT TO DRILL form for such proposals.

5. LEASE DESIGNATION AND SERIAL NUMBER:	
6. IF INDIAN, ALLOTTEE OR TRIBE NAME:	Ute Tribe
7. UNIT or CA AGREEMENT NAME:	
1. TYPE OF WELL: OIL WELL ☑ GAS WELL ☑ OTHER Water Injection Well	8. WELL NAME and NUMBER: See Attached
2. NAME OF OPERATOR: Berry Petroleum Company	9. API NUMBER: Attached
3. ADDRESS OF OPERATOR: 5201 Truxtun Ave., Suite 300, CITY Bakersfield STATE CA ZIP 93309-0640 PHONE NUMBER: (661)616-3900	10. FIELD AND POOL, OR WILDCAT: Brundage Canyon
4. LOCATION OF WELL FOOTAGES AT SURFACE: See attached listing QTR/QTR, SECTION, TOWNSHIP, RANGE, MERIDIAN:	COUNTY: Duchesne STATE: UTAH

11. CHECK APPROPRIATE BOXES TO INDICATE NATURE OF NOTICE, REPORT, OR OTHER DATA

TYPE OF SUBMISSION	TYPE OF ACTION		
☑ NOTICE OF INTENT (Submit in Duplicate) Approximate date work will start: _____	☐ ACIDIZE	☐ DEEPEN	☐ REPERFORATE CURRENT FORMATION
	☐ ALTER CASING	☐ FRACTURE TREAT	☐ SIDETRACK TO REPAIR WELL
	☐ CASING REPAIR	☐ NEW CONSTRUCTION	☐ TEMPORARILY ABANDON
	☐ CHANGE TO PREVIOUS PLANS	☐ OPERATOR CHANGE	☐ TUBING REPAIR
	☐ CHANGE TUBING	☐ PLUG AND ABANDON	☐ VENT OR FLARE
☐ SUBSEQUENT REPORT (Submit Original Form Only) Date of work completion: _____	☐ CHANGE WELL NAME	☐ PLUG BACK	☐ WATER DISPOSAL
	☐ CHANGE WELL STATUS	☐ PRODUCTION (START/RESUME)	☐ WATER SHUT-OFF
	☐ COMMINGLE PRODUCING FORMATIONS	☐ RECLAMATION OF WELL SITE	☑ OTHER: Change of Operator
	☐ CONVERT WELL TYPE	☐ RECOMPLETE - DIFFERENT FORMATION	

12. DESCRIBE PROPOSED OR COMPLETED OPERATIONS. Clearly show all pertinent details including dates, depths, volumes, etc.

Effective 8/28/03 Berry Petroleum Company will assume operatorship of the referenced wells (see attached list) from Williams Production RMT Company.

NAME (PLEASE PRINT) Jerry V. Hoffman TITLE Chairman, President, and CEO

SIGNATURE Jerry V. Hoffman DATE 8/28/03

(This space for State use only)

RECEIVED
SEP 04 2003
DIV. OF OIL, GAS & MINING

(5/2000) (See Instructions on Reverse Side)

STATE OF UTAH
DEPARTMENT OF NATURAL RESOURCES
DIVISION OF OIL, GAS AND MINING

FORM 9

SUNDRY NOTICES AND REPORTS ON WELLS

Do not use this form for proposals to drill new wells, significantly deepen existing wells below current bottom-hole depth, reenter plugged wells, or to drill horizontal laterals. Use APPLICATION FOR PERMIT TO DRILL form for such proposals.

5. LEASE DESIGNATION AND SERIAL NUMBER:

6. IF INDIAN, ALLOTTEE OR TRIBE NAME: Ute Tribe

7. UNIT or CA AGREEMENT NAME:

1. TYPE OF WELL: OIL WELL ☑ GAS WELL ☑ OTHER Water Injection Well

8. WELL NAME and NUMBER: See Attached

2. NAME OF OPERATOR: Williams Production RMT Company

9. API NUMBER: Attached

3. ADDRESS OF OPERATOR: 1515 Arapahoe Street, Tower 3, Suite 1000 CITY Denver STATE CO ZIP 80202

PHONE NUMBER: (303) 572-3900

10. FIELD AND POOL, OR WILDCAT: Brundage Canyon

4. LOCATION OF WELL

FOOTAGES AT SURFACE: See attached listing

COUNTY: Duchesne

QTR/QTR, SECTION, TOWNSHIP, RANGE, MERIDIAN:

STATE: UTAH

11. CHECK APPROPRIATE BOXES TO INDICATE NATURE OF NOTICE, REPORT, OR OTHER DATA

TYPE OF SUBMISSION	TYPE OF ACTION		
☑ NOTICE OF INTENT (Submit in Duplicate)	☐ ACIDIZE	☐ DEEPEN	☐ REPERFORATE CURRENT FORMATION
Approximate date work will start:	☐ ALTER CASING	☐ FRACTURE TREAT	☐ SIDETRACK TO REPAIR WELL
	☐ CASING REPAIR	☐ NEW CONSTRUCTION	☐ TEMPORARILY ABANDON
	☐ CHANGE TO PREVIOUS PLANS	☐ OPERATOR CHANGE	☐ TUBING REPAIR
	☐ CHANGE TUBING	☐ PLUG AND ABANDON	☐ VENT OR FLARE
☐ SUBSEQUENT REPORT (Submit Original Form Only)	☐ CHANGE WELL NAME	☐ PLUG BACK	☐ WATER DISPOSAL
Date of work completion:	☐ CHANGE WELL STATUS	☐ PRODUCTION (START/RESUME)	☐ WATER SHUT-OFF
	☐ COMMINGLE PRODUCING FORMATIONS	☐ RECLAMATION OF WELL SITE	☑ OTHER: Change of Operator
	☐ CONVERT WELL TYPE	☐ RECOMPLETE - DIFFERENT FORMATION	

12. DESCRIBE PROPOSED OR COMPLETED OPERATIONS. Clearly show all pertinent details including dates, depths, volumes, etc.

Effective 8/28/03 Williams Production RMT Company will relinquish operatorship of the referenced wells (see attached list) to Berry Petroleum Company.

NAME (PLEASE PRINT) Joseph P. Barrett TITLE Director - Land

SIGNATURE [signature] DATE 8/28/03

(This space for State use only)

RECEIVED
SEP 04 2003
DIV. OF OIL, GAS & MINING

(5/2000) (See Instructions on Reverse Side)

Well Name	Oil/Gas	API #	Lease	E&D	Location
Ute Tribal 12-14-54	OIL	43-013-32369		14-20-H62-4728	NWSW 2056' FSL, 586' FWL SEC. 14, T5S, R4W
Ute Tribal 12-15	OIL	43-013-32205	14-20-H62-4661	N/A	NWSW 1997' FSL, 481' FWL SEC. 15, T5S, R4W
Ute Tribal 14-15	OIL	43-013-30842	14-20-H62-4661	N/A	SESW 793' FSL, 1847' FWL SEC. 15, T5S, R4W
Ute Tribal 15-16	OIL	43-013-31648	14-20-H62-3413	N/A	SWSE 1030' FSL, 1990' FEL SEC. 16, T5S, R4W
Ute Tribal 16-16	OIL	43-013-30841	14-20-H62-3413	N/A	SESE 733' FSL, 786' FEL SEC. 16, T5S, R4W
Ute Tribal 11-17 (CB)	OIL	43-013-32145	14-20-H62-4919	14-20-H62-4659	NESW 1980' FSL, 1980' FWL SEC. 17, T5S, R4W
Ute Tribal 12-17 (CB)	OIL	43-013-32146	14-20-H62-4919	14-20-H62-4659	NWSW 2000' FSL, 660' FWL SEC. 17, T5S, R4W
Ute Tribal 13-17 (CB)	OIL	43-013-31546	14-20-H62-4919	14-20-H62-4659	SWSW 796' FSL, 645' FWL SEC. 17, T5S, R4W
Ute Tribal 13-17-54 TMM	GAS	43-013-32237	14-20-H62-4731	14-20-H62-4659	SWSW 854' FSL, 671' FWL SEC. 17, T5S, R4W
Ute Tribal 14-17 (CB)	OIL	43-013-32147	14-20-H62-4919	14-20-H62-4659	SESW 908' FSL, 1621' FWL SEC. 17, T5S, R4W
Ute Tribal 15-17	OIL	43-013-31649	14-20-H62-4731	14-20-H62-4659	SWSE 660' FSL, 2080' FEL SEC. 17, T5S, R4W
Ute Tribal 9-18 (CB)	OIL	43-013-32144	14-20-H62-4919	N/A	NESE 1807' FSL, 654' FEL SEC. 18, T5S, R4W
Ute Tribal 15-18 (CB)	OIL	43-013-32148	14-20-H62-4919	N/A	SWSE 748' FSL, 1836' FEL SEC. 18, T5S, R4W
Ute Tribal 16-18	INJ	43-013-31650	14-20-H62-4919	N/A	SESE 636' FSL, 586' FEL SEC. 18, T5S, R4W
Ute Tribal 1-19	OIL	43-013-30933	14-20-H62-4919	N/A	NENE 521' FNL, 558' FEL SEC. 19, T5S, R4W
Ute Tribal 2-19	INJ	43-013-32140	14-20-H62-4919	N/A	NWNE 381' FNL, 1846' FEL SEC. 19, T5S, R4W
Ute Tribal 3-19	OIL	43-013-31830	14-20-H62-3528	N/A	NENW 564' FNL, 2183' FWL SEC. 19, T5S, R4W
Ute Tribal 5-19	OIL	43-013-32204	14-20-H62-3528	N/A	SWNW 1940' FNL, 511' FWL SE. 19, T5S, R4W
Ute Tribal 7-19	OIL	43-013-31282	14-20-H62-4919	N/A	SWNE 1824' FNL, 2023' FEL SEC. 19, T5S, R4W
Ute Tribal 9-19	OIL	43-013-31831	14-20-H62-3528	N/A	NESE 1797' FSL, 533' FEL SEC. 19, T5S, R4W
Ute Tribal 11-19	OIL	43-013-31547	14-20-H62-3528	N/A	NESW 1764' FSL, 1796' FWL SEC. 19, T5S, R4W
Ute Tribal 13-19	OIL	43-013-31284	14-20-H62-3528	N/A	SWSW 612' FSL, 635' FWL SEC. 19, T5S, R4W
Ute Tribal 15-19	OIL	43-013-31832	14-20-H62-3528	N/A	SWSE 477' FNL, 1868' FEL SEC. 19, T5S, R4W
Ute Tribal 1-20	OIL	43-013-30966	14-20-H62-3529	N/A	NENE 678' FNL, 736' FEL SEC. 20, T5S, R4W
Ute Tribal 5-20	OIL	43-013-31651	14-20-H62-4919	N/A	SWNW 1856' FNL, 683' FWL SEC. 20, T5S, R4W
Ute Tribal 11-20	OIL	43-013-32168	14-20-H62-3529	N/A	NESW 2146' FSL, 1630' FWL SEC. 20, T5S, R4W
Ute Tribal 13-20	OIL	43-013-32206	14-20-H62-3529	N/A	SWSW 689' FSL, 909' FWL SEC. 20, T5S, R4W
Ute Tribal 2-21	OIL	43-013-31280	14-20-H62-3414	N/A	NWNE 759' FNL, 1978' FEL SEC. 21, T5S, R4W
Ute Tribal 2-21G	GAS	43-013-31313	14-20-H62-3414	N/A	NWNE 760' FNL, 1982' FEL SEC. 21, T5S, R4W
Ute Tribal 6-21	OIL	43-013-32164	14-20-H62-3414	N/A	SENW 1791' FNL, 1609' FWL SEC. 21, T5S, R4W
Ute Tribal 8-21	OIL	43-013-30829	14-20-H62-3414	N/A	SENE 2090' FNL, 722' FEL SEC. 21, T5S, R4W
Ute Tribal 10-21	OIL	43-013-31283	14-20-H62-3414	N/A	NWSE 1506' FSL, 2247' FEL SEC. 21, T5S, R4W
Ute Tribal 4-22	OIL	43-013-30755	14-20-H62-3415	N/A	NWNW 749' FNL, 507' FWL SEC. 22, T5S, R4W
Ute Tribal 6-22	OIL	43-013-32163	14-20-H62-3415	N/A	SENW 1710' FNL, 1850' FWL SEC. 22, T5S, R4W
Ute Tribal 12-22	OIL	43-013-31311	14-20-H62-3415	N/A	NWSW 1977' FSL, 658' FWL SEC. 22, T5S, R4W
Ute Tribal 13-22	OIL	43-013-31548	14-20-H62-3415	N/A	SWSW 715' FSL, 838' FWL SEC. 22, T5S, R4W
Ute Tribal 23-3R	OIL	43-013-30886	14-20-H62-4943	14-20-H62-4728	NENW 603' FNL, 2386' FWL SEC. 23, T5S, R4W
Ute Tribal 9-26	OIL	43-013-32191	14-20-H62-4954	14-20-H62-4728	NESE 2118' FSL, 777' FEL SEC. 26, T5S, R4W
Ute Tribal 2-27	OIL	43-013-32179	14-20-H62-3375	N/A	NWNE 778' FNL, 2273' FEL SEC. 27, T5S, R4W
Ute Tribal 4-27	OIL	43-013-31131	14-20-H62-3375	N/A	NWNW 736' FNL, 693' FWL SEC. 27, T5S, R4W
Ute Tribal 1-28	OIL	43-013-31549	14-20-H62-4740	14-20-H62-4659	NENE 778' FNL, 592' FEL SEC. 28, T5S, R4W
Ute Tribal 3-28-54	OIL	43-013-32261	14-20-H62-4740	14-20-H62-4659	NENW 660' FNL, 1980' FWL SEC. 28, T5S, R4W
Ute Tribal 5-28	OIL	43-013-32189	14-20-H62-4740	14-20-H62-4659	SWNW 1960' FNL, 575' FWL SEC. 28, T5S, R4W
Ute Tribal 5-28-54 TMM	GAS	43-013-32236	14-20-H62-4740	14-20-H62-4659	SWNW 1992' FNL, 560' FWL SEC. 28, T5S, R4W
Ute Tribal 7-28	OIL	43-013-32166	14-20-H62-4740	14-20-H62-4659	SWNE 1711' FNL, 1949' FEL SEC. 28, T5S, R4W
Ute Tribal 11-28	OIL	43-013-32192	14-20-H62-4740	14-20-H62-4659	NESW 2322' FSL, 1920' FWL SEC. 28, T5S, R4W
Ute Tribal 1-29	OIL	43-013-30964	14-20-H62-3416	14-20-H62-4659	NENE 652' FNL, 760' FEL SEC. 29, T5S, R4W
Ute Tribal 3-29	OIL	43-013-32193	14-20-H62-3416	14-20-H62-4659	NENW 585' FNL, 1802' FWL SEC. 29, T5S, R4W
Ute Tribal 1-30	OIL	43-013-30948	14-20-H62-4662	14-20-H62-4659	NENE 627' FNL, 542' FEL SEC. 30, T5S, R4W
Ute Tribal 4-30	OIL	43-013-31550	14-20-H62-4662	14-20-H62-4659	NWNW 751' FNL, 740' FWL SEC. 30, T5S, R4W
Ute Tribal 7-30	OIL	43-013-32167	14-20-H62-4662	14-20-H62-4659	SWNE 1811' FNL, 1818' FEL SEC. 30 T5S, R4W
Ute Tribal 5-31	OIL	43-013-32190	14-20-H62-4946	14-20-H62-4659	SWNW 1410' FNL, 585' FWL SEC. 31, T5S, R4W
Ute Tribal 1-32R	OIL	43-013-30872	14-20-H62-4947	14-20-H62-4659	NENE 628' FNL, 635' FEL SEC. 32, T5S, R4W

RECEIVED
SEP 0 4 2003
DIV. OF OIL, GAS & MINING

Well Name	Oil/Gas	API #	Lease	E&D	Location
Ute Tribal 1-33	OIL	43-013-32185	14-20-H62-4948	14-20-H62-4659	NENE 720' FNL, 796' FEL SEC. 33, T5S, R4W
Ute Tribal 1-34	OIL	43-013-32186	14-20-H62-4955	14-20-H62-4659	NENE 1150' FNL, 644' FEL SEC. 34, T5S, R4W
Ute Tribal 5-13	OIL	43-013-31152	14-20-H62-4845	14-20-H62-4659	SWNW 1667' FNL, 905' FWL SEC. 13, T5S, R5W
Ute Tribal 16-14-55	OIL	43-013-32272	14-20-H62-5016	14-20-H62-4728	SESE 379' FSL, 871' FEL SEC. 14, T5S, R5W
Ute Tribal 5-15-55	OIL	43-013-32344	14-20-H62-5017	14-20-H62-4728	SWNW 2050' FNL, 762' FWL SEC. 15, T5S, R5W
Ute Tribal 10-16-55	OIL	43-013-32345		14-20-H62-4728	NWSE 1802' FSL, 1970' FEL SEC. 16, T5S, R5W
Ute Tribal 15-17-55	OIL	43-013-32358		14-20-H62-4728	SWSE 179' FSL, 1733' FEL SEC. 17, T5S, R5W
Ute Tribal 7-20-55	OIL	43-013-32346	14-20-H62-5018	14-20-H62-4728	SWNE 2438' FNL, 2440' FEL SEC. 20, T5S, R5W
Ute Tribal 9-23WSW	WTR	WR#43-11041	14-20-H62-3443	N/A	NESE 1855' FSL, 715' FEL SEC. 23, T5S, R5W
Ute Tribal 9-23X	OIL	43-013-30999	14-20-H62-3443	N/A	NESE 1830' FSL, 665' FEL SEC. 23, T5S, R5W
Ute Tribal 11-23-55	OIL	43-013-32269	14-20-H62-3443	N/A	NESW 1875' FSL, 2187' FWL SEC. 23, T5S, R5W
Ute Tribal 15-23	OIL	43-013-31671	14-20-H62-3443	N/A	SWSE 612' FSL, 1973' FEL SEC. 23, T5S, R5W
Ute Tribal 1-24-55	OIL	43-013-32259	14-20-H62-4749	N/A	NENE 583' FNL, 852' FEL SEC. 24, T5S, R5W
Ute Tribal 3-24WSW	WTR	WR#43-10994	14-20-H62-4749	N/A	SENW 1430' FNL, 1425' FWL SEC. 24, T5S, R5W
Ute Tribal 5-24-55	OIL	43-013-32263	14-20-H62-4749	N/A	SWNW 1911' FNL, 780' FWL SEC. 24, T5S, R5W
Ute Tribal 9-24-55	OIL	43-013-32268	14-20-H62-4749	N/A	NWSE 2392' FSL, 486' FWL SEC. 24, T5S, R5W
Ute Tribal 11-24	OIL	43-013-31909	14-20-H62-4749	N/A	NESW 2005' FSL, 2557' FWL SEC. 24, T5S, R5W
Ute Tribal 13-24	OIL	43-013-31910	14-20-H62-4749	N/A	SWSW 520' FSL, 1051' FWL SEC. 24, T5S, R5W
Ute Tribal 15-24R	OIL	43-013-31129	14-20-H62-4749	N/A	SWSE 1048' FSL, 1364' FEL SEC. 24, T5S, R5W
Ute Tribal 1-25	OIL	43-013-30945	14-20-H62-3537	N/A	NENE 661' FNL, 520' FEL SEC. 25, T5S, R5W
Ute Tribal 2-25	OIL	43-013-31833	14-20-H62-3537	N/A	NWNE 760' FNL, 2000' FEL SEC. 25, T5S, R5W
Ute Tribal 3-25	OIL	43-013-31834	14-20-H62-3537	N/A	NENW 464' FNL, 2174' FWL SEC. 25, T5S, R5W
Ute Tribal 6-25H	OIL	43-013-32143	14-20-H62-3537	N/A	SENW 2127' FNL, 2218' FWL SEC. 25, T5S, R5W
Ute Tribal 7-25	OIL	43-013-31310	14-20-H62-3537	N/A	SWNE 1973' FNL, 2106' FEL SEC. 25, T5S, R5W
Ute Tribal 9-25-55	OIL	43-013-32390	14-20-H62-3537	N/A	NESE 2083' FSL, 751' FEL SEC. 25, T5S, R5W
Ute Tribal 11-25	OIL	43-013-31911	14-20-H62-3537	N/A	NESW 1871' FSL, 1982' FWL SEC. 25, T5S, R5W
Ute Tribal 13-25	OIL	43-013-32169	14-20-H62-3537	N/A	SWSW 700' FSL, 501' FWL SEC. 25, T5S, R5W
Ute Tribal 15-25-55	OIL	43-013-32271	14-20-H62-3537	N/A	SWSE 693' FSL, 2012' FEL SEC. 25, T5S, R5W
Ute Tribal 1-26	OIL	43-013-31912	14-20-H62-3444	N/A	NENE 500' FNL, 468' FEL SEC. 26, T5S, R5W
Ute Tribal 3-26	OIL	43-013-30955	14-20-H62-3444	N/A	NENW 612' FNL, 2121' FEL SEC. 26, T5S, R5W
Ute Tribal 5-26-55	OIL	43-013-32264	14-20-H62-3444	N/A	SWNW 1810' FNL, 465' FWL SEC. 26, T5S, R5W
Ute Tribal 14-28-55	OIL	43-013-32348	14-20-H62-5019	14-20-H62-4728	SESW 1107' FSL, 1548' FWL SEC. 28, T5S, R5W
Ute Tribal 16-29-55	OIL	43-013-32349	14-20-H62-5020	14-20-H62-4728	SESE 1250' FSL, 1027' FEL SEC. 29, T5S, R5W
Ute Tribal 2-32-55	OIL	43-013-32350		14-20-H62-4728	NWNE 800' FNL, 2000' FEL SEC. 32, T5S, R5W
Ute Tribal 4-33-55	OIL	43-013-32357		14-20-H62-4728	NWNW 87' FNL, 168' FWL SEC. 33, T5S, R5W
Ute Tribal 2-35	OIL	43-013-32187	14-20-H62-4945	14-20-H62-4659	NWNE 951' FNL, 1566' FEL SEC. 35, T5S, R5W
Ute Tribal 8-35-55	OIL	43-013-32267	14-20-H62-4945	14-20-H62-4659	SENE 2464' FNL, 552' FEL SEC. 35, T5S, R5W
Ute Tribal 10-35-55	OIL	43-013-32353	14-20-H62-4945	14-20-H62-4659	NWSE 1611' FSL, 1938' FEL SEC. 35, T5S, R5W
Ute Tribal 4-36	OIL	43-013-32188	14-20-H62-4944	14-20-H62-4659	NWNW 860' FNL, 660' FWL SEC. 36, T5S, R5W
Ute Tribal 6-36-55	OIL	43-013-32265	14-20-H62-4944	14-20-H62-4659	SENW 2480' FNL, 1702' FWL SEC. 36, T5S, R5W
Ute Tribal 12-36-55	OIL	43-013-32354	14-20-H62-4944	14-20-H62-4659	NWSW 1980' FSL, 659' FWL SEC. 36, T5S, R5W

Ute Tribal 3-2HR-55 43-013-30960

Permits	Status				
MOON TRIBAL 12-23-54	W/O RELEASE	43-013-32347	14-20-H62-4943		NWSW 1899' FSL, 771' FWL SEC. 23, T5S, R4W
MOON TRIBAL 14-27-54	HAVE STATE APRVL	43-013-32408	14-20-H62-3375		SESW 1073' FSL, 1928' FWL SEC. 27, T5S, R4W
MOON TRIBAL 6-27-54	HAVE STATE APRVL	43-013-32407	14-20-H62-3375		SENW 2041' FNL, 2101' FWL SEC. 27, T5S, R4W
STATE TRIBAL 1-7R-54	APPROVED	43-013-30925		14-20-H62-4728	NENE 508' FNL, 792' FEL SEC. 7, T5S, R4W
UTE TRIBAL 10-28-55	HAVE STATE APRVL	43-013-32419		14-20-H62-4728	NWSE 1783' FSL, 1879' FEL SEC. 28, T5S, R5W
UTE TRIBAL 11-20-55	HAVE STATE APRVL	43-013-32415		14-20-H62-4728	NESW 1863' FSL, 1983' FWL SEC. 20, T5S, R5W
UTE TRIBAL 1-20-55	HAVE STATE APRVL	43-013-32414		14-20-H62-4728	NENE 923' FNL, 315' FEL SEC. 20, T5S, R5W
UTE TRIBAL 12-21-54	APPROVED	43-013-32385	14-20-H62-3414		NWSW 1510' FSL, 366' FWL SEC. 21, T5S, R4W
~~UTE TRIBAL 13-18-54~~	~~APPROVED~~	~~43-013-32270~~	~~14-20-H62-4739~~	~~14-20-H62-4659~~	~~SWSW 656' FSL, 657' FWL SEC. 18, T5S, R4W~~

RECEIVED
SEP 0 4 2003
DIV. OF OIL, GAS & MINING

Well Name	Oil/Gas	API #	Lease	E&D	Location
UTE TRIBAL 13-28-54	W/O RELEASE	43-013-32387	14-20-H62-4740		SWSW 519' FSL, 1021' FWL SEC. 28, T5S, R4W
UTE TRIBAL 13-30-54	HAVE STATE APRVL	43-013-32409	14-20-H62-4662		SWSW 743' FSL, 482' FWL SEC. 30, T5S, R4W
UTE TRIBAL 14-21-54	W/O RELEASE	43-013-32384	14-20-H62-3414		SESW 894' FSL, 1567' FWL SEC. 21, T5S, R4W
UTE TRIBAL 14-36-55	W/O LOC	43-013-32355	14-20-H62-4945		SESW 839' FSL, 1802' FWL SEC. 36, T5S, R5W
UTE TRIBAL 15-20-54	W/O RELEASE	43-013-32386	14-20-H62-3529		SWSE 660' FSL, 1980' FEL SEC. 20, T5S, R4W
UTE TRIBAL 15-28-54	W/O RELEASE	43-013-32389	14-20-H62-4740		SWSE 660' FSL, 1980' FEL SEC. 28, T5S, R4W
UTE TRIBAL 15-30-54	W/O LOC	43-013-32382	14-20-H62-4662		SWSE 470' FSL, 1925' FEL SEC. 30, T5S, R4W
UTE TRIBAL 16-21-54	W/O RELEASE	43-013-32381	14-20-H62-3414		SESE 700' FSL, 690' FEL SEC. 21, T5S, R4W
UTE TRIBAL 16-35-55	W/O RELEASE	43-013-32352	14-20-H62-4945		SESE 657' FSL, 883' FEL SEC. 35, T5S, R5W
UTE TRIBAL 16-36-55	W/O RELEASE	43-013-32356	14-20-H62-4945		SESE 474' FSL, 576' FEL SEC. 36, T5S, R5W
UTE TRIBAL 2-36-55	HAVE STATE APRVL	43-013-32422	14-20-H62-4944		NWNE 375' FNL, 2225' FEL SEC. 36, T5S, R5W
UTE TRIBAL 3-20-54	W/O RELEASE	43-013-32377	14-20-H62-3529		NENW 320' FNL, 2090' FWL SEC. 20, T5S, R4W
UTE TRIBAL 3-32-54	HAVE STATE APRVL	43-013-32410	14-20-H62-4947		NENW 926' FNL, 1985' FWL SEC. 32, T5S, R4W
UTE TRIBAL 3-33-54	HAVE STATE APRVL	43-013-32412	14-20-H62-4948		NENW 749' FNL, 2113' FWL SEC. 33, T5S, R4W
UTE TRIBAL 4-21-54	W/O SPUD	43-013-32378	14-20-H62-3414		NWNW 928' FNL, 898' FWL SEC. 21, T5S, R4W
~~UTE TRIBAL 5-18-54~~	~~APPROVED~~	~~43-013-32262~~	~~14~~20-H62-4739		SENW 2029' FNL, 819' FWL SEC. 18, T5S, R4W
UTE TRIBAL 5-30-54	W/O SPUD	43-013-32380			SWNW 2100' FNL, 1020' FWL SEC. 30, T5S, R4W
UTE TRIBAL 6-32-55	HAVE STATE APRVL	43-013-32420		14-20-H62-4728	SENW 1864' FNL, 1846' FWL SEC. 32, T5S, R5W
~~UTE TRIBAL 7-18-54~~	~~APPROVED~~	~~43-013-32266~~	14-20-H62-4739		SWNE 2123' FNL, 1968' FWL SEC. 18, T5S, R4W
UTE TRIBAL 7-32-54	HAVE STATE APRVL	43-013-32411	14-20-H62-4947		SWNE 2334' FNL, 1840' FEL SEC. 32, T5S, R4W
UTE TRIBAL 7-33-54	HAVE STATE APRVL	43-013-32413	14-20-H62-4948		SWNE 2129' FNL, 2295' FEL SEC. 33, T5S, R4W
~~UTE TRIBAL 8-25-55~~	~~LOCATION BUILT~~	~~43-013-31835~~	~~14-20-H62-3537~~		SENE 1993' FNL, 583' FEL SEC. 25, T5S, R5W
UTE TRIBAL 8-32-55	HAVE STATE APRVL	43-013-32421		14-20-H62-4728	SENE 2502' FNL, 890' FEL SEC. 32, T5S, R5W
UTE TRIBAL 8-36-55	HAVE STATE APRVL	43-013-32423	14-20-H62-4944		SENE 2358' FNL, 956' FEL SEC. 36, T5S, R5W
UTE TRIBAL 9-20-54	W/O SPUD	43-013-32379	14-20-H62-3529		NESE 2547' FSL, 855' FEL SEC. 20, T5S, R4W
UTE TRIBAL 9-28-54	W/O LOC	43-013-32388	14-20-H62-4740		NESE 1665' FSL, 502' FEL SEC. 28, T5S, R4W
UTE TRIBAL 9-30-54	EXCEPTION LOCATION	43-013-32383	14-20-H62-4662		NESE 1848' FSL, 367' FEL SEC. 30, T5S, R4W

Permits with associated CA's

UTE TRIBAL 1-27-55	HAVE STATE APRVL	43-013-32416	UTU - 76967		NENE 501' FNL, 825' FEL SEC. 27, T5S, R5W
UTE TRIBAL 15-27-55	W/O LOC	43-013-32339	UTU - 76967	14-20-H62-4728	SWSE 413' FSL, 1346' FEL SEC. 27, T5S, R5W
UTE TRIBAL 3-27-55	HAVE STATE APRVL	43-013-32417	UTU - 76967		NENW 378' FNL, 1307' FWL SEC. 27, T5S, R5W
UTE TRIBAL 7-27-55	HAVE STATE APRVL	43-013-32418	UTU - 76967		SWNE 1799' FNL, 1983' FEL SEC. 27, T5S, R5W

Communitization Agreements

Tabby Canyon 1-21	OIL	43-013-31699	UTU 76965	14-20-H62-4728	NENE 613' FNL, 572' FEL SEC. 21, T5S, R5W
Tabby Canyon 8-22	OIL	43-013-31700	UTU 76966	14-20-H62-4728	SENE 1890' FNL, 840' FEL SEC. 22, T5S, R5W
Sowers Canyon 9-27	OIL	43-013-31701	UTU - 76967	14-20-H62-4728	NESE 2160' FSL, 850' FEL SEC. 27, T5S, R5W
Foy Tribal 11-34-55	OIL	43-013-32351	UTU - 76968	14-20-H62-4728	NESW 1979' FSL, 2101' FWL SEC. 34, T5S, R5W

RECEIVED
SEP 0 4 2003
DIV. OF OIL, GAS & MINING

Division of Oil, Gas and Mining

OPERATOR CHANGE WORKSHEET

ROUTING
1. GLH
2. CDW
3. FILE

X Change of Operator (Well Sold) Designation of Agent/Operator

Operator Name Change Merger

The operator of the well(s) listed below has changed, effective: **8/28/2003**

FROM: (Old Operator):	**TO:** (New Operator):
N1945 - Williams Production RMT Company	N2480 - Berry Petroleum Company
1515 Arapahoe St., Tower 3, #1000	5201 Truxtun Ave., Suite 300
Denver, CO 80202	Bakersfield, CA 93309-0640
Phone: 1-(303) 572-3900	Phone: 1-(661) 616-3900

CA No. **Unit:**

WELL(S)

NAME	SEC	TWN	RNG	API NO	ENTITY NO	LEASE TYPE	WELL TYPE	WELL STATUS
UTE TRIBAL 5-19	19	050S	040W	4301332204	13090	Indian	OW	P
UTE TRIBAL 11-20	20	050S	040W	4301332168	12946	Indian	OW	P
UTE TRIBAL 6-21	21	050S	040W	4301332164	12994	Indian	OW	P
UTE TRIBAL 6-22	22	050S	040W	4301332163	12974	Indian	OW	P
UTE TRIBAL 9-26	26	050S	040W	4301332191	13101	Indian	OW	P
UTE TRIBAL 2-27	27	050S	040W	4301332179	12975	Indian	OW	P
UTE TRIBAL 7-28	28	050S	040W	4301332166	12995	Indian	OW	P
UTE TRIBAL 5-28	28	050S	040W	4301332189	13026	Indian	OW	P
UTE TRIBAL 11-28	28	050S	040W	4301332192	13022	Indian	OW	P
UTE TRIBAL 3-29	29	050S	040W	4301332193	13042	Indian	OW	TA
UTE TRIBAL 7-30	30	050S	040W	4301332167	12945	Indian	OW	P
UTE TRIBAL 5-31	31	050S	040W	4301332190	13080	Indian	OW	P
UTE TRIBAL 1-33	33	050S	040W	4301332185	13024	Indian	OW	P
UTE TRIBAL 1-34	34	050S	040W	4301332186	13121	Indian	OW	P
UTE TRIBAL 11-25	25	050S	050W	4301331911	12182	Indian	OW	P
UTE TRIBAL 6-25H	25	050S	050W	4301332143	12750	Indian	OW	P
UTE TRIBAL 13-25	25	050S	050W	4301332169	12857	Indian	OW	P
UTE TRIBAL 1-26	26	050S	050W	4301331912	12235	Indian	OW	P
UTE TRIBAL 2-35	35	050S	050W	4301332187	13021	Indian	OW	P
UTE TRIBAL 4-36	36	050S	050W	4301332188	13063	Indian	OW	P

OPERATOR CHANGES DOCUMENTATION

Enter date after each listed item is completed

1. (R649-8-10) Sundry or legal documentation was received from the **FORMER** operator on: 9/4/2003
2. (R649-8-10) Sundry or legal documentation was received from the **NEW** operator on: 9/4/2003
3. The new company was checked on the **Department of Commerce, Division of Corporations Database on:** 8/13/2003
4. Is the new operator registered in the State of Utah: YES Business Number: 5307764-0143
5. If **NO**, the operator was contacted contacted on: _____

20

6. (R649-9-2)Waste Management Plan has been received on: IN PLACE

7. **Federal and Indian Lease Wells:** The BLM and or the BIA has approved the merger, name change, or operator change for all wells listed on Federal or Indian leases on: BLM N/A BIA not received

8. **Federal and Indian Units:**
The BLM or BIA has approved the successor of unit operator for wells listed on: not received

9. **Federal and Indian Communization Agreements ("CA"):**
The BLM or BIA has approved the operator for all wells listed within a CA on: n/a

10. **Underground Injection Control ("UIC")** The Division has approved UIC Form 5, **Transfer of Authority to Inject,** for the enhanced/secondary recovery unit/project for the water disposal well(s) listed on: 9/23/2003

DATA ENTRY:

1. Changes entered in the **Oil and Gas Database on:** 9/30/2003
2. Changes have been entered on the **Monthly Operator Change Spread Sheet on:** 9/30/2003
3. Bond information entered in RBDMS on: n/a
4. Fee wells attached to bond in RBDMS on: n/a

STATE WELL(S) BOND VERIFICATION:

1. State well(s) covered by Bond Number: N/A

FEDERAL WELL(S) BOND VERIFICATION:

1. Federal well(s) covered by Bond Number: N/A

INDIAN WELL(S) BOND VERIFICATION:

1. Indian well(s) covered by Bond Number: RLB0005647

FEE WELL(S) BOND VERIFICATION:

1. (R649-3-1) The **NEW** operator of any fee well(s) listed covered by Bond Number n/a

2. The **FORMER** operator has requested a release of liability from their bond on: 9/29/2003
The Division sent response by letter on: 10/2/2003

LEASE INTEREST OWNER NOTIFICATION:

3. (R649-2-10) The **FORMER** operator of the fee wells has been contacted and informed by a letter from the Division of their responsibility to notify all interest owners of this change on: n/a

COMMENTS:

Form 3160-5
(April 2004)

UNITED STATES
DEPARTMENT OF THE INTERIOR
BUREAU OF LAND MANAGEMENT

RECEIVED
JUL 26 2004
DIV. OF OIL, GAS & MINING

FORM APPROVED
OM B No. 1004-0137
Expires: March 31, 2007

SUNDRY NOTICES AND REPORTS ON WELLS

Do not use this form for proposals to drill or to re-enter an abandoned well. Use Form 3160-3 (APD) for such proposals.

SUBMIT IN TRIPLICATE- Other instructions on reverse side.

1. Type of Well
☑ Oil Well ☐ Gas Well ☐ Other

2. Name of Operator **Berry Petroleum Company**

3a. Address **410 17th Street Suite 2440 Denver, CO 80202**

3b. Phone No. *(include area code)* **303 825-3344**

4. Location of Well *(Footage, Sec., T., R., M., or Survey Description)*

500' FNL x 468' FEL (NENE) Section 26, Township 5 South, Range 5 West

5. Lease Serial No.
14-20-H62-3444

6. If Indian, Allottee or Tribe Name
Ute (Minerals)

7. If Unit or CA/Agreement, Name and/or No.

8. Well Name and No.
Ute Tribal 1-26

9. API Well No.
43-013-31912

10. Field and Pool, or Exploratory Area
Brundage Canyon

11. County or Parish, State
Duchesne County, Utah

12. CHECK APPROPRIATE BOX(ES) TO INDICATE NATURE OF NOTICE, REPORT, OR OTHER DATA

TYPE OF SUBMISSION	TYPE OF ACTION			
☑ Notice of Intent	☐ Acidize	☐ Deepen	☐ Production (Start/Resume)	☐ Water Shut-Off
☐ Subsequent Report	☐ Alter Casing	☐ Fracture Treat	☐ Reclamation	☐ Well Integrity
☐ Final Abandonment Notice	☐ Casing Repair	☐ New Construction	☑ Recomplete	☐ Other
	☐ Change Plans	☐ Plug and Abandon	☐ Temporarily Abandon	
	☐ Convert to Injection	☐ Plug Back	☐ Water Disposal	

13. Describe Proposed or Completed Operation (clearly state all pertinent details, including estimated starting date of any proposed work and approximate duration thereof. If the proposal is to deepen directionally or recomplete horizontally, give subsurface locations and measured and true vertical depths of all pertinent markers and zones. Attach the Bond under which the work will be performed or provide the Bond No. on file with BLM/BIA. Required subsequent reports shall be filed within 30 days following completion of the involved operations. If the operation results in a multiple completion or recompletion in a new interval, a Form 3160-4 shall be filed once testing has been completed. Final Abandonment Notices shall be filed only after all requirements, including reclamation, have been completed, and the operator has determined that the site is ready for final inspection.)

Please see the attached Recompletion Procedure for the Ute Tribal 1-26

14. I hereby certify that the foregoing is true and correct
Name *(Printed/Typed)* **Richard A. Haefele** Title **Technician**

Signature RAH Date 7/20/04

THIS SPACE FOR FEDERAL OR STATE OFFICE USE

Approved by _____ Date _____

Conditions of approval, if any, are attached. Approval of this notice does not warrant or certify that the applicant holds legal or equitable title to those rights in the subject lease which would entitle the applicant to conduct operations thereon.

Office

Accepted by the Utah Division of Oil, Gas and Mining
Date: 7/25/04
By:

Federal Approval Of This Action Is Necessary

Title 18 U.S.C. Section 1001 and Title 43 U.S.C. Section 1212, make it a crime for any person knowingly and willfully to make to any department or agency of the United States any false, fictitious or fraudulent statements or representations as to any matter within its jurisdiction.

(Instructions on page 2)

UTE TRIBAL #1-26 **July 19, 2004**
UTELAND BUTTE RECOMPLETION PROGRAM

Well Data:

Location: 500' FNL 468' FEL (NE NE)
Sec. 26, T5S-R5W
Duchesne County, Utah

API No: 43-013-31912

Depth: TD 5,670'; PBTD 5,584' (CBL tag 8/21/2000)
5,516' (CO per report 11/8/2000)

Elevation: KB 6,744'; GL 6,732'

CSG: 8 5/8" 24# J-55 STC set @ 304'GL cmt'd w/ 125 sx "Type V"
5 ½" 15.5# J-55 LTC set @ 5,660' cmt'd w/ 345 sx Hi Fil V + 351 sx 50/50 Poz

TBG: 2 7/8" 6.5# J-55 8rd
w/ 2 7/8" SN 1 jt off btm. EOT @ X,XXX' TAC @ X,XXX'

Fm Tops: Uinta @ surface, Green River @ 1,140', TGR 3 Mrkr @ 3,389', Dgls Crk Mbr @ 4,162', Upr Blk Shale @ 4,794', Cstl Pk Ls @ 5,081', Uteland Butte Ls @ 5,483'.

Top of good cmt. bond: 3,470' (CBL 8/00)

Open Perforations:

Douglas Creek:	4,600' - 4,761' OA
Upr Castle Peak:	5,123' - 5,169' OA
Mdl Castle Peak:	5,219' - 5,235' OA
Mdl/Lwr Castle Peak:	5,254' - 5,423' OA

Correlate Depths to the Schlumberger Compensated Neutron/ Litho-Density/Array Induction log, dated 8/16/00.

****

PROGRAM:

1) MIRU. Pump htd 3% KCl wtr down csg. Un-seat pump & flush tbg w/ htd 3% KCl wtr. POH w/ rods and pump. Kill well w/ htd wtr. Rel TAC. NU BOPE. PU 2 ⅞" tbg & RIH and CO to +/- 5,620' (current PBTD est. @ 5,516' – fill/cone from composite plug). POH.

   NOTE: Limited rathole. Well will need to be cleaned out beyond current PBTD.

2) RU wireline. RIH w/ 4" csg gun(s). Perf the following **Uteland Butte** interval @ 2 jspf, w/ 19.5 gm charges, 0.51" dia. holes:

5,508' – 12' (4', 8 holes)	**5,546' – 51'** (5', 10 holes)
5,530' – 33' (3', 6 holes)	**5,557' – 61'** (4', 8 holes)
5,538' – 41' (3', 6 holes)	**5,579' – 83'** (4', 8 holes)
(Total 23', 46 holes)	

3) PU 5½" pkr & 3½" workstring. RIH & set pkr @ +/- 5,475'. Load hole and breakdown perfs w/rig pump. Monitor annulus for communication during breakdown.

4) RU Halliburton & frac perfs via 3½" tbg per Halliburton design. SD & record ISIP. RD frac equip f/ wellhead. Open well ASAP and force close frac. Leave well flowing to pit.

5) After well dies, rel pkr & POOH. LD pkr & 3½" workstring.

6) RIH w/ 2⅞" tbg & anchor catcher w/ NC & SN and RIH to mid perf of Uteland Butte. RU swab. Swab until hole clean of sand. Verify hole clean to PBTD.

7) Set anchor catcher. ND BOPE. NU tbg head & flow tee. RIH w/ pump & rod string. Seat pump & space out. Fill tbg & test to 500psi. Hang on clamps. Start well pumping. RD & MO.

Form 3160-5
(April 2004)

UNITED STATES
DEPARTMENT OF THE INTERIOR
BUREAU OF LAND MANAGEMENT

FORM APPROVED
OM B No. 1004-0137
Expires: March 31, 2007

SUNDRY NOTICES AND REPORTS ON WELLS

Do not use this form for proposals to drill or to re-enter an abandoned well. Use Form 3160 - 3 (APD) for such proposals.

SUBMIT IN TRIPLICATE- Other instructions on reverse side.

1. Type of Well
☑ Oil Well ☐ Gas Well ☐ Other

2. Name of Operator **Berry Petroleum Company**

3a. Address **410 17th Street Suite 2440 Denver, CO 80202**

3b. Phone No. *(include area code)* **303 825-3344**

4. Location of Well *(Footage, Sec., T., R., M., or Survey Description)*

500' FNL x 468' FEL (NENE), Section 26, Township 5 South, Range 5 West

5. Lease Serial No.
14-20-H62-3444

6. If Indian, Allottee or Tribe Name
Ute Tribe

7. If Unit or CA/Agreement, Name and/or No.

8. Well Name and No.
Ute Tribe 1-26

9. API Well No.
43-013-31912

10. Field and Pool, or Exploratory Area
Brundage Canyon

11. County or Parish, State
Duchesne County, Utah

12. CHECK APPROPRIATE BOX(ES) TO INDICATE NATURE OF NOTICE, REPORT, OR OTHER DATA

TYPE OF SUBMISSION	TYPE OF ACTION			
☐ Notice of Intent	☐ Acidize	☐ Deepen	☐ Production (Start/Resume)	☐ Water Shut-Off
☑ Subsequent Report	☐ Alter Casing	☐ Fracture Treat	☐ Reclamation	☐ Well Integrity
☐ Final Abandonment Notice	☐ Casing Repair	☐ New Construction	☑ Recomplete	☐ Other **Recompletion History**
	☐ Change Plans	☐ Plug and Abandon	☐ Temporarily Abandon	
	☐ Convert to Injection	☐ Plug Back	☐ Water Disposal	

13. Describe Proposed or Completed Operation (clearly state all pertinent details, including estimated starting date of any proposed work and approximate duration thereof. If the proposal is to deepen directionally or recomplete horizontally, give subsurface locations and measured and true vertical depths of all pertinent markers and zones. Attach the Bond under which the work will be performed or provide the Bond No. on file with BLM/BIA. Required subsequent reports shall be filed within 30 days following completion of the involved operations. If the operation results in a multiple completion or recompletion in a new interval, a Form 3160-4 shall be filed once testing has been completed. Final Abandonment Notices shall be filed only after all requirements, including reclamation, have been completed, and the operator has determined that the site is ready for final inspection.)

Please see the attached recompletion procedure for the Ute Tribe 1-26.

14. I hereby certify that the foregoing is true and correct
Name *(Printed/Typed)* **Jeff Schroeder** Title **Regulatory**

Signature Date **08/27/2004**

AUG 31 2004

THIS SPACE FOR FEDERAL OR STATE OFFICE USE

Approved by _____ Title _____ Date _____

Conditions of approval, if any, are attached. Approval of this notice does not warrant or certify that the applicant holds legal or equitable title to those rights in the subject lease which would entitle the applicant to conduct operations thereon. Office

Title 18 U.S.C. Section 1001 and Title 43 U.S.C. Section 1212, make it a crime for any person knowingly and willfully to make to any department or agency of the United States any false, fictitious or fraudulent statements or representations as to any matter within its jurisdiction.

(Instructions on page 2)

BERRY PETROLEUM COMPANY

DAILY RECOMPLETION / REPAIR REPORT

DATE 7-27-2004 LOCATION UTE TRIBAL 1-26 REPORT SUBMITTED BY Gerry Courtright
AFE # RIG # MD Rig #3 DAYS 1
PBTD 5516' to ORIG TD 5670
PRESENT OPERATION MIRU. POOH w/rod & Pump. X-over TO POOH w/ Tbg. & BHA. IN AM

PRESENT WELL STATUS

FTP (PSI)		CHOKE		MCF/D		BOPD	BWPD
FCP (PSI)		CHOKE		MCF/D		BOPD	BWPD
SITP (PSI)		HRS SI		SI CONDUCTOR (PSI) 20"			HRS SI
SI SURFACE CP (PSI) 13 3/8"		HRS SI		SI INTERMEDIATE CP 9-7/8"			HRS SI
SI PROD CP (PSI) 5-1/2"		HRS SI					

ORIGINAL LOAD TO REC	BBLS OIL		BBLS WATER		SCF GAS	START UP INFO
RECOVRED LAST 24 HRS	BBLS OIL		BBLS WATER		SCF GAS	TIME ON
TOTAL LOAD RECOVERED	BBLS OIL		BBLS WATER		SCF GAS	ITP-
LOAD LEFT TO RECOVER	BBLS OIL		BBLS WATER		SCF GAS	ICP-
PROD LAST 24 HRS	BBLS OIL		BBLS WATER		SCF GAS	SPM X LNTH
						TOTAL LOAD
						LOAD LEFT

PERFORATIONS

FORMATION	FROM	TO	NO. AND SIZE OF HOLES	STATUS

DAILY OPERATIONAL DETAILS

(PREVIOUS 24 HOURS)

HOURS	
10AM	Road rig & equip. From U.T. 1-23-55 to loc. MIRU rig & rod equip. Spot in pipe racks & unload 3½" tbg. onto racks. LD horsehead & unseat pump. Flush rods w/ 35 bbls. htd. wtr. POOH w/ rods & pump. ND well head. Rel. TAC. NU Frac head & BOP. RU Floor & tbg. equip. POOH w/ 157 jts. 8rd Tbg. Next 157 Jts. are PS Hydrill. Had to Locate tbg. elevators to use on Hydrill tbg. RU Pump & Lines & other Circ. equip. Pull tbg. IN AM.
5PM	SWOT & SDFN

AUG 3 1 2004

			DAILY	CUM
RIG FUEL START	GALLONS			
FUEL ON HAND	GALLONS	FLUID COST		
USED LAST 24 HRS	GALLONS			
		WELL COST	8637	8637
TOTAL HOURS				

BERRY PETROLEUM COMPANY

DAILY RECOMPLETION / REPAIR REPORT

DATE 7-28-2004 LOCATION UTE TRIBAL 1-26 REPORT SUBMITTED BY Gerry Courtright

AFE # _____ RIG # MD Serv. Rig #3. DAYS 2

PBTD 5613' le ORIG TD 5670'

PRESENT OPERATION POOH w/ Tbg. & BHA. RIH w/ bit & Tbg. C/O sand to PBTD. POOH w/ 37 Stds. Tbg.

PRESENT WELL STATUS

FTP (PSI)		CHOKE		MCF/D		BOPD		BWPD
FCP (PSI)		CHOKE		MCF/D		BOPD		BWPD
SITP (PSI)		HRS SI		SI CONDUCTOR (PSI) 20"				HRS SI
SI SURFACE CP (PSI) 13 3/8"		HRS SI		SI INTERMEDIATE CP 9-7/8"				HRS SI
SI PROD CP (PSI) 5-1/2"		HRS SI						
ORIGINAL LOAD TO REC		BBLS OIL		BBLS WATER		SCF GAS		
RECOVRED LAST 24 HRS		BBLS OIL		BBLS WATER		SCF GAS		
TOTAL LOAD RECOVERED		BBLS OIL		BBLS WATER		SCF GAS		
LOAD LEFT TO RECOVER		BBLS OIL		BBLS WATER		SCF GAS		
PROD LAST 24 HRS		BBLS OIL		BBLS WATER		SCF GAS		

START UP INFO
TIME ON
ITP-
ICP-
SPM X LNTH
TOTAL LOAD
LOAD LEFT

PERFORATIONS

FORMATION	FROM	TO	NO. AND SIZE OF HOLES	STATUS

DAILY OPERATIONAL DETAILS

(PREVIOUS 24 HOURS)

HOURS	
7AM	Pull Tbg. Elevators & POOH w/ 155 Jts. Hydril Tbg. & BHA. (Tally out). RIH w/ 4 3/4" bit & Tbg. Tag @ 5300'. RU P. Swivel & Strip Off Head. Drlg. up cmt from Comp. plug & C/O sand to 5613'. (PBTD) Circ. Clean. POOH w/ 37 Stds. Tbg. EOT @ Approx. 3200'.
5PM	SWI & SDFN.
	NOTE: Lost 685 bbls. wtr. while Est. Circ & Circ. out sand.

AUG 3 1 2004

			DAILY	CUM
	RIG FUEL START	GALLONS		
	FUEL ON HAND	GALLONS	FLUID COST	
	USED LAST 24 HRS	GALLONS		
			WELL COST	4737	13374
	TOTAL HOURS			

BERRY PETROLEUM COMPANY

DAILY RECOMPLETION / REPAIR REPORT

DATE 7-29-2004 LOCATION UTE TRIBAL 1-26 REPORT SUBMITTED BY G Courtright
AFE # RIG # MD Rig #3 DAYS 3
PBTD 5613' ie ORIG TD 5670'
PRESENT OPERATION POOH w/tbg. Perf. Utel and Butte Interval. PU & RIH w/PKr. & 3½" tbg.

PRESENT WELL STATUS

FTP (PSI) CHOKE MCF/D BWPD
FCP (PSI) CHOKE MCF/D BWPD
SITP (PSI) HRS SI SI CONDUCTOR (PSI) HRS SI
SI SURFACE CP (PSI) 13 3/8" HRS SI SI INTERMEDIATE CP 9-7/8" HRS SI
SI PROD CP (PSI) 5-1/2" HRS SI

ORIGINAL LOAD TO REC		BBLS OIL		BBLS WATER		SCF GAS
RECOVRED LAST 24 HRS		BBLS OIL		BBLS WATER		SCF GAS
TOTAL LOAD RECOVERED		BBLS OIL		BBLS WATER		SCF GAS
LOAD LEFT TO RECOVER		BBLS OIL		BBLS WATER		SCF GAS
PROD LAST 24 HRS		BBLS OIL		BBLS WATER		SCF GAS

START UP INFO
TIME ON
ITP-
ICP-
SPM X LNTH
TOTAL LOAD
LOAD LEFT

PERFORATIONS

FORMATION	FROM	TO	NO. AND SIZE OF HOLES	STATUS
Utel and Butte	5508'	5512'	8 holes 0.51" Dia.	Complete
" "	5530'	5533'	6 " "	
" "	5538'	5541'	6 " "	
" "	5546'	5551'	10 " "	
" "	5557'	5561'	8 " "	
" "	5579'	5583'	8 " "	

DAILY OPERATIONAL DETAILS

(PREVIOUS 24 HOURS)

HOURS	
7AM	Con't. to POOH w/tbg. RU Hallco w/L to Perf. Utel and Butte Interval PU & RIH w/4" csg. guns. Perf. 5579'-83', 5557'-61', 5546'-51', 5538'-41', 5530'-33' & 5508'-12' (23' 46 holes) w/2 JSPF, 19.5 gm. Chrg's, & 0.51" Dia. Holes. POOH & RD Hallco w/L. PU Hallco compression PKr & 3½" P-110 Tbg. & RIH. Set PKr. @ 5457' & Land tbg. in Slips. Load hole w/38 bbls wtr. & break DN. Perfs. w/rig pump. Broke @ 2000 PSI Pump into Form. @ 2000 PSI @ 1.25 bpm rate.
4:30PM	SWI & SDFN

AUG 3 1 2004

			DAILY	CUM
RIG FUEL START	GALLONS			
FUEL ON HAND	GALLONS	FLUID COST		
USED LAST 24 HRS	GALLONS			
TOTAL HOURS		WELL COST	4727	13374

BERRY PETROLEUM COMPANY

DAILY RECOMPLETION / REPAIR REPORT

DATE 7-31-2004 LOCATION UTE TRIBAL 1-26 REPORT SUBMITTED BY Gerry Courtright

AFE # RIG # MD Well Serv. Rig DAYS 4

PBTD 5613' ie ORIG TD 5610'

PRESENT OPERATION Frac Ute Land Butte. Flowback U.B. Interval. POOH & LD 3½" Hyd. & 5½" PKR.

PRESENT WELL STATUS

FTP (PSI)		CHOKE		MCF/D		BOPD		BWPD	
FCP (PSI)		CHOKE		MCF/D		BOPD		BWPD	
SITP (PSI)		HRS SI				SI CONDUCTOR (PSI) 20"		HRS SI	
SI SURFACE CP (PSI) 13 3/8"		HRS SI				SI INTERMEDIATE CP 9-7/8"		HRS SI	
SI PROD CP (PSI) 5-1/2"		HRS SI							
ORIGINAL LOAD TO REC		BBLS OIL		BBLS WATER		SCF GAS	
RECOVRED LAST 24 HRS		BBLS OIL		BBLS WATER		SCF GAS	
TOTAL LOAD RECOVERED		BBLS OIL		BBLS WATER		SCF GAS	
LOAD LEFT TO RECOVER		BBLS OIL		BBLS WATER		SCF GAS	
PROD LAST 24 HRS		BBLS OIL		BBLS WATER		SCF GAS	

START UP INFO	
TIME ON	
ITP-	
ICP-	
SPM X LNTH	
TOTAL LOAD	
LOAD LEFT	

PERFORATIONS

FORMATION	FROM	TO	NO. AND SIZE OF HOLES	STATUS

DAILY OPERATIONAL DETAILS

(PREVIOUS 24 HOURS)

HOURS	
6AM	RU HALCO & FRAC Ute Land Butte Interval as follows: Form. broke @ 2240 PSI, Max. press. - 4960 PSI, Avg. press - 3700 PSI, MAX. rate - 30.1 bpm, Avg. rate - 29.8 bpm. Total Sand - 601 sx's, Total Fluid - 760 bbls. 5 stages. 55 gals S/E, 500 gal Spacer, 238 bbl. pad, 1 ppg Sand to 6 ppg Sand & 48 bbl. Flush. ISIP - 2450 PSI. RU Flowback line & open to rig TANK w/ 1200 PSI @ Approx. 1 bpm rate. Flowback 3½ hrs. & recov. Approx. 175 bbls. Fluid. Pump 30 bbls wtr. Dn. Csg. Rel. PKR & equalize press. POOH & LD 175 Jts. 3½" P-110 tbg & PKR - LD PKR.
5:30 PM	SWI & SDFN

AUG 3 1 2004

			DAILY	CUM
RIG FUEL START	GALLONS			
FUEL ON HAND	GALLONS	FLUID COST		
USED LAST 24 HRS	GALLONS			
TOTAL HOURS		WELL COST	5112	69030

FINAL Report

BERRY PETROLEUM COMPANY

DAILY RECOMPLETION / REPAIR REPORT

DATE 8-1-2004 LOCATION UTE TRIBAL 1-26 REPORT SUBMITTED BY Gerry Courtright
AFE # RIG # MD Well Serv. Rig #3. DAYS 5
PBTD 5613' to ORIG TD 5620
PRESENT OPERATION chg. over. RIH w/ Prod. Hbg. Chk. PBTD.

PRESENT WELL STATUS

FTP (PSI)		CHOKE		MCF/D		BOPD		BWPD
FCP (PSI)		CHOKE		MCF/D		BOPD		BWPD
SITP (PSI)		HRS SI				SI CONDUCTOR (PSI) 20"		HRS SI
SI SURFACE CP (PSI) 13 3/8"		HRS SI				SI INTERMEDIATE CP 9-7/8"		HRS SI
SI PROD CP (PSI) 5-1/2"		HRS SI						

ORIGINAL LOAD TO REC	BBLS OIL	1489	BBLS WATER	BBLS WATER	SCF GAS	
RECOVRED LAST 24 HRS	BBLS OIL	190	BBLS WATER	BBLS WATER	SCF GAS	
TOTAL LOAD RECOVERED	BBLS OIL	1299	BBLS WATER	BBLS WATER	SCF GAS	
LOAD LEFT TO RECOVER	BBLS OIL		BBLS WATER	BBLS WATER	SCF GAS	
PROD LAST 24 HRS	BBLS OIL		BBLS WATER	BBLS WATER	SCF GAS	

START UP INFO	
TIME ON	
ITP-	0
ICP-	0
SPM X LNTH	
TOTAL LOAD	1489
LOAD LEFT	1299

PERFORATIONS

FORMATION	FROM	TO	NO. AND SIZE OF HOLES	STATUS

DAILY OPERATIONAL DETAILS

(PREVIOUS 24 HOURS)

HOURS	
7AM	Chg. over to 2 7/8" Tbg. equip. from 3½" Tbg. equip. RIH w/ NC, 1 jt Tbg, SN, 5 Jts Tbg. TAC & Tbg. Tag @ 5554', RU circ. equip. circ dirt sand to 5613' (PBTD) circ. clean. PU & set TAC @ 5466'. RU swab & RIH IFL @ 1100'. Made 2 swab runs to chk for sand & recov. 15 bbls. Fluid. FFL @ 1500'. No sand. RD swab. RD Floor & Tbg. equip. ND BOP & csg. flg. NU well head & chg. over to run rods. RIH w/ rebuilt pump, 4-1½" wt. bars w/ stabilizers, 15-3/4" guided rods (rep. Lace 15 bad slick rods) 127-3/4" slick rods & 75-7/8" guided rods. (rep. Laced 28-7/8" "EL" rods in 7/8" string) seat pump & space out. All Tbg. w/ 14 bbls. Wtr. Press. Test & stroke to 700 PSI. Good test. Hang horse head & hang off rods. Left well ready for prod. Could not start well because of problem w/ pumping unit. Will rig dn. in AM.
6:30 PM	

AUG 31 2004

			DAILY	CUM
RIG FUEL START	GALLONS			
FUEL ON HAND	GALLONS	FLUID COST		
USED LAST 24 HRS	GALLONS			
TOTAL HOURS		WELL COST	10565	79545

BERRY PETROLEUM COMPANY

DAILY RECOMPLETION / REPAIR REPORT

DATE 8-6-2004 LOCATION UTE TRIBAL 1-26 REPORT SUBMITTED BY Gerry Courtright
AFE # RIG # Pool Rig #14. DAYS 6
PBTD 5613' ie ORIG TD 5670'
PRESENT OPERATION chg. pump.

PRESENT WELL STATUS

FTP (PSI) CHOKE MCF/D BOPD BWPD
FCP (PSI) CHOKE MCF/D BOPD BWPD
SITP (PSI) HRS SI SI CONDUCTOR (PSI) 20" HRS SI
SI SURFACE CP (PSI) 13 3/8" HRS SI SI INTERMEDIATE CP 9-7/8" HRS SI
SI PROD CP (PSI) 5-1/2" HRS SI
ORIGINAL LOAD TO REC BBLS OIL 40 BBLS WATER SCF GAS
RECOVRED LAST 24 HRS BBLS OIL — BBLS WATER SCF GAS
LOAD LEFT TO RECOVER BBLS OIL 40 BBLS WATER SCF GAS
PROD LAST 24 HRS BBLS OIL BBLS WATER SCF GAS

PERFORATIONS

FORMATION	FROM	TO	NO. AND SIZE OF HOLES	STATUS

DAILY OPERATIONAL DETAILS

(PREVIOUS 24 HOURS)

HOURS	
10 AM	Road rig from U.T. 8-22-54 to Loc. MIRU rig & rod equip. LD horsehead & Unseat pump. Flush rods w/30 bbls. htd. wtr. Pool w/rods & Pump. PU & RIH w/ rebuilt pump & rods. Seat pump & space out. Fill tbg w/10 bbls. wtr. Press. test & stroke to 600 PSI. Well pumped up very slowly & pumping erratic. Hang horsehead & hang off rods. Left well pumping to prod. Stayed RU. Will chk. well in am before RD.
5PM	SDFN.

AUG 3 1 2004

					DAILY	CUM
	RIG FUEL START		GALLONS			
	FUEL ON HAND		GALLONS	MUD COST	$0	$0
	USED LAST 24 HRS	0	GALLONS			
0	TOTAL HOURS			WELL COST	3377	82972

STATE OF UTAH
DEPARTMENT OF NATURAL RESOURCES
DIVISION OF OIL, GAS AND MINING

FORM 9

SUNDRY NOTICES AND REPORTS ON WELLS

Do not use this form for proposals to drill new wells, significantly deepen existing wells below current bottom-hole depth, reenter plugged wells, or to drill horizontal laterals. Use APPLICATION FOR PERMIT TO DRILL form for such proposals.

1. TYPE OF WELL: OIL WELL ☑ GAS WELL ☑ OTHER	5. LEASE DESIGNATION AND SERIAL NUMBER: See attached list
	6. IF INDIAN, ALLOTTEE OR TRIBE NAME:
	7. UNIT or CA AGREEMENT NAME:
	8. WELL NAME and NUMBER: See Attached List
2. NAME OF OPERATOR: Berry Petroleum	9. API NUMBER: Attached
3. ADDRESS OF OPERATOR: Rt 2 Box 7735 CITY Roosevelt STATE UT ZIP 84066 PHONE NUMBER: (435) 722-1325	10. FIELD AND POOL, OR WILDCAT:
4. LOCATION OF WELL FOOTAGES AT SURFACE: QTR/QTR, SECTION, TOWNSHIP, RANGE, MERIDIAN:	COUNTY: Duchesne STATE: UTAH

11. CHECK APPROPRIATE BOXES TO INDICATE NATURE OF NOTICE, REPORT, OR OTHER DATA

TYPE OF SUBMISSION	TYPE OF ACTION		
☐ NOTICE OF INTENT (Submit in Duplicate) Approximate date work will start:	☐ ACIDIZE	☐ DEEPEN	☐ REPERFORATE CURRENT FORMATION
	☐ ALTER CASING	☐ FRACTURE TREAT	☐ SIDETRACK TO REPAIR WELL
	☐ CASING REPAIR	☐ NEW CONSTRUCTION	☐ TEMPORARILY ABANDON
	☐ CHANGE TO PREVIOUS PLANS	☐ OPERATOR CHANGE	☐ TUBING REPAIR
	☐ CHANGE TUBING	☐ PLUG AND ABANDON	☐ VENT OR FLARE
☑ SUBSEQUENT REPORT (Submit Original Form Only) Date of work completion:	☐ CHANGE WELL NAME	☐ PLUG BACK	☑ WATER DISPOSAL
	☐ CHANGE WELL STATUS	☐ PRODUCTION (START/RESUME)	☐ WATER SHUT-OFF
	☐ COMMINGLE PRODUCING FORMATIONS	☐ RECLAMATION OF WELL SITE	☐ OTHER:
	☐ CONVERT WELL TYPE	☐ RECOMPLETE - DIFFERENT FORMATION	

12. DESCRIBE PROPOSED OR COMPLETED OPERATIONS. Clearly show all pertinent details including dates, depths, volumes, etc.

Produced wastewater from Berry Petroleum Company wells (see attached well list) will be or have been used for injection in our enhanced oil recovery project(s) in the Brundage Canyon Field or they will be trucked to one of the following approved waste water disposal sites:

- R.N. Industries, Inc. Sec. 4, T2S, R2W, Bluebell
- MC & MC Disposal Sec. 12, T6S, R19E, Vernal
- LaPoint Recycle & Storage Sec. 12, T5S, R19E, LaPoint
- Water Disposal Inc. Sec. 32, T1S, R1W, Roosevelt
- ITL 4461 W 3000 So Roosevelt Location Pleasant Valley
- IWM PO Box 430 Altamont or 20250 W 2000 S Duchesne Location – Blue Bench
- Pro Water 12223 Highland Ave Ste B503 Rancho Cucamonga Ca 91739 Location – Blue Bench

COPY SENT TO OPERATOR
Date: 12-13-2012
Initials: KS

Approved by the Utah Division of Oil, Gas and Mining

Date: 12/11/12

By:

NAME (PLEASE PRINT) Krista Mecham TITLE Sr. Regulatory & Permitting Tech

SIGNATURE Krista Mecham DATE 11/21/2012

(This space for State use only) Federal Approval of this action required for Federal wells.

RECEIVED
DEC 06 2012
DIV. OF OIL, GAS & MINING

(5/2000) (See Instructions on Reverse Side)

API	Well Name	Lease
43-013-32710	#1 DLB 12-15-56	Fee
43-013-33447	1-15-56 DLB	Fee
43-013-33378	14-11-56 DLB	Fee
43-013-30842	B C UTE TRIBAL 14-15	14-20-H62-3412
43-013-30841	B C UTE TRIBAL 16-16	14-20-H62-3413
43-013-30829	B C UTE TRIBAL 8-21	14-20-H62-3414
43-013-30755	BC UTE TRIBAL 4-22	14-20-H62-3415
43-013-33216	BERRY TRIBAL 1-23-54	14-20-H62-4943
43-013-33867	BERRY TRIBAL 2-34D-54	14-20-H62-4955
43-013-33384	BERRY TRIBAL 4-34-54	14-20-H62-4955
43-013-33381	BERRY TRIBAL 7-23-54	14-20-H62-4943
43-013-33383	BERRY TRIBAL 7-34-54	14-20-H62-4955
43-013-33417	BERRY TRIBAL 8-23D-54	14-20-H62-4943
43-013-33465	BERRY TRIBAL 9-23-54	14-20-H62-4943
43-013-33382	BERRY TRIBAL 9-34-54	14-20-H62-4955
43-013-33724	BERRY TRIBAL 10-23D-54	14-20-H62-4943
43-013-33422	BERRY TRIBAL 10-34D-54	14-20-H62-4955
43-013-33725	BERRY TRIBAL 11-23D-54	14-20-H62-4943
43-013-33529	BERRY TRIBAL 11-34D-54	14-20-H62-4955
43-013-50527	BERRY TRIBAL 12-34D-54	14-20-H62-4955
43-013-34043	BERRY TRIBAL 13-23-54	14-20-H62-4943
43-013-33989	BERRY TRIBAL 14-23D-54	14-20-H62-4943
43-013-33217	BERRY TRIBAL 15-23-54	14-20-H62-4943
43-013-33411	BERRY TRIBAL 15-34-54	14-20-H62-4955
43-013-33464	BERRY TRIBAL 16-34D-54	14-20-H62-4955
43-013-50524	FEDERAL 1-1D-64	UTU-77321
43-013-51142	FEDERAL 1-1D-65	UTU-77326
43-013-51232	FEDERAL 1-11-65	UTU-77330
43-013-50326	FEDERAL 10-1D-65	UTU-77326
43-013-33542	FEDERAL 10-2-65	UTU-77326
43-013-33386	FEDERAL 10-3-65	UTU-77326
43-013-50735	FEDERAL 10-6D-64	UTU-77322
43-013-33451	FEDERAL 11-10-65	UTU-77330
43-013-50327	FEDERAL 11-1D-65	UTU-77326
43-013-50763	FEDERAL 11-2D-65	UTU-77326
43-013-50565	FEDERAL 11-4D-64	UTU-77314
43-013-50348	FEDERAL 11-5D-64	UTU-8894A
43-013-34284	FEDERAL 11-6D-64	UTU-77322
43-013-50328	FEDERAL 12-1D-65	UTU-77326
43-013-50737	FEDERAL 12-3D-64	UTU-77321
43-013-50349	FEDERAL 12-5D-64	UTU-8894A
43-013-50261	FEDERAL 12-6D-64	UTU-77322
43-013-50730	FEDERAL 1-2D-64	UTU-77321
43-013-33966	FEDERAL 1-2D-65	UTU-77326
43-013-50329	FEDERAL 13-1D-65	UTU-77326
43-013-50337	FEDERAL 13-5D-64	UTU-8894A
43-013-50347	FEDERAL 13-6D-64	UTU77322
43-013-50330	FEDERAL 14-1D-65	UTU-77326

43-013-50338	FEDERAL 14-5D-64	UTU-8894A
43-013-34285	FEDERAL 14-6D-64	UTU-77322
43-013-51175	FEDERAL 15-1D-65	UTU-77326
43-013-50764	FEDERAL 15-2D-65	UTU-77326
43-013-50553	FEDERAL 15-5D-65	UTU-77327
43-013-51176	FEDERAL 16-1D-65	UTU-77326
43-013-33490	FEDERAL 16-5-65	UTU-77327
43-013-50266	FEDERAL 1-6-64	UTU-77322
43-013-51233	FEDERAL 2-11D-65	UTU-77326
43-013-50759	FEDERAL 2-1D-65	UTU-77326
43-013-33385	FEDERAL 2-2-65	UTU-77326
43-013-34018	FEDERAL 2-2D-64	UTU-77321
43-013-34286	FEDERAL 2-6D-64	UTU-77322
43-013-51093	FEDERAL 3-12D-65	UTU-77326
43-013-50760	FEDERAL 3-1D-65	UTU-77326
43-013-34001	FEDERAL 3-2D-65	UTU-77326
43-013-50782	FEDERAL 3-4D-65	UTU-77327
43-013-34287	FEDERAL 3-5D-64	UTU-8894A
43-013-50268	FEDERAL 3-6D-64	UTU-77322
43-013-51094	FEDERAL 4-12D-65	UTU-77326
43-013-50736	FEDERAL 4-3D-64	UTU-77321
43-013-50521	FEDERAL 4-4D-65	UTU-77327
43-013-50263	FEDERAL 4-5D-64	UTU-8894A
43-013-50267	FEDERAL 4-6D-64	UTU-77322
43-013-51095	FEDERAL 5-12D-65	UTU-77330
43-013-50761	FEDERAL 5-1D-65	UTU-77326
43-013-33448	FEDERAL 5-3-64	UTU-77321
43-013-33450	FEDERAL 5-4-64	UTU-77326
43-013-33387	FEDERAL 5-4-65	UTU-77327
43-013-50259	FEDERAL 5-5D-64	UTU-8894A
43-013-33489	FEDERAL 5-6-65	UTU-77327
43-013-50269	FEDERAL 5-6D-64	UTU-77322
43-013-33491	FEDERAL 6-11-65	UTU-77330
43-013-51096	FEDERAL 6-12D-65	UTU-77330
43-013-32699	FEDERAL 6-1-65	UTU-77325
43-013-32557	FEDERAL 6-2-65	UTU-77326
43-013-50522	FEDERAL 6-3D-64	UTU-77321
43-013-34288	FEDERAL 6-5D-64	UTU-8894A
43-013-33745	FEDERAL 6-6D-64	UTU-77322
43-013-50566	FEDERAL 6-6D-65	UTU-77327
43-013-34061	FEDERAL 7-11D-65	UTU-77330
43-013-34015	FEDERAL 7-1D-65	UTU-77325
43-013-50734	FEDERAL 7-2D-64	UTU-77321
43-013-50525	FEDERAL 7-2D-65	UTU-77326
43-013-34065	FEDERAL 7-3D-65	UTU-77326
43-013-34020	FEDERAL 7-6D-64	UTU-77322
43-013-51232	FEDERAL 8-11D-65	UTU-77326
43-013-33449	FEDERAL 8-1-64	UTU-77321
43-013-50350	FEDERAL 8-1D-65	UTU-77326

43-013-33581	FEDERAL 8-2D-64	UTU-77321
43-013-50719	FEDERAL 8-2D-65	UTU-77326
43-013-50325	FEDERAL 8-6D-64	UTU-77322
43-013-50342	FEDERAL 9-1D-65	UTU-77326
43-013-50762	FEDERAL 9-2D-65	UTU-77326
43-013-51218	FEDERAL 9-6D-64	UTU-77322
43-013-32351	FOY TRIBAL 11-34-55	UTU-76968
43-013-33799	FOY TRIBAL 12H-33-55	FEE
43-013-51288	LC FEE 10-28D-56	FEE
43-013-50994	LC FEE 10-31D-45	FEE
43-013-50965	LC FEE 1-22-57	FEE
43-013-50718	LC FEE 1-22D-56	FEE
43-013-51371	LC FEE 1-31D-45	FEE
43-013-50929	LC FEE 13-29-45	FEE
43-013-50870	LC FEE 15-23D-56	FEE
43-013-50601	LC FEE 16-16D-56	FEE
43-013-50777	LC FEE 2-20D-56	FEE
43-013-33593	LC FEE 6-12-57	FEE
43-013-50867	LC FEE 8-28D-56	FEE
43-013-50928	LC FEE 8-29-45	FEE
43-013-50963	LC FEE 9-12D-57	FEE
43-013-51192	LC FEE 9-19-56	FEE
43-013-50602	LC TRIBAL 10-16D-56	14-20-H62-6301
43-013-50999	LC TRIBAL 10-21-56	14-20-H62-3433
43-013-33677	LC TRIBAL 11-17-56	14-20-H62-6300
43-013-50751	LC TRIBAL 11-3D-56	14-20-H62-6435
43-013-50780	LC TRIBAL 12-22D-56	14-20-H62-6302
43-013-33606	LC TRIBAL 12H-6-56	14-20-H62-5500
43-013-34282	LC TRIBAL 13-16D-56	14-20-H62-5623
43-013-33591	LC TRIBAL 13H-3-56	14-20-H62-6435
43-013-50776	LC TRIBAL 14-14D-56	14-20-H62-6436
43-013-50834	LC TRIBAL 14-15D-56	14-20-H62-6435
43-013-33492	LC TRIBAL 14-2-56	14-20-H62-6472
43-013-51030	LC TRIBAL 15-15D-56	14-20-H62-6435
43-013-50606	LC TRIBAL 15-22D-56	14-20-H62-6302
43-013-50871	LC TRIBAL 15-26-56	14-20-H62-6471
43-013-51132	LC TRIBAL 16-30D-56	2OG-000-5500
43-013-33608	LC TRIBAL 1-9-56	14-20-H62-5657
43-013-33538	LC TRIBAL 2-16D-56	14-20-H62-5623
43-013-51429	LC TRIBAL 2-28D-45	2OG-000-5500
43-013-50866	LC TRIBAL 2-28D-56	14-20-H62-6473
43-013-50925	LC TRIBAL 2-5D-56	14-20-H62-6432
43-013-50926	LC TRIBAL 2-9D-56	14-20-H62-5657
43-013-50598	LC TRIBAL 3-15D-56	14-20-H62-6435
43-013-33541	LC TRIBAL 3-17-56	14-20-H62-5655
43-013-50751	LC TRIBAL 3-21D-56	14-20-H62-3433
43-013-50976	LC TRIBAL 3-34-45	2OG-000-5500
43-013-33580	LC TRIBAL 3-5-56	14-20-H62-6257
43-013-33539	LC TRIBAL 4-16-56	14-20-H62-6301

43-013-50262	LC TRIBAL 4-27D-56	14-20-H62-6303
43-013-50661	LC TRIBAL 5-14D-56	14-20-H62-6436
43-013-50752	LC TRIBAL 5-21D-56	14-20-H62-3433
43-013-50625	LC TRIBAL 5-23D-56	14-20-H62-6434
43-013-50260	LC TRIBAL 6-22D-56	14-20-H62-6302
43-013-50868	LC TRIBAL 6-27D-56	14-20-H62-6303
43-013-51034	LC TRIBAL 6-28-45	2OG-000-5500
43-013-51073	LC TRIBAL 7-27-45	2OG-000-5500
43-013-33577	LC TRIBAL 7-3-56	14-20-H62-5656
43-013-50599	LC TRIBAL 8-16D-56	14-20-H62-6301
43-013-33576	LC TRIBAL 8-28-46	14-20-H62-5500
43-013-51131	LC TRIBAL 8-30D-56	2OG-000-5500
43-013-33605	LC TRIBAL 8-4-56	14-20-H62-6256
43-013-51031	LC TRIBAL 9-15D-56	14-20-H62-6435
43-013-51430	LC TRIBAL 9-28D-45	2OG-000-5500
43-013-51112	LC TRIBAL 9-8D-56	2OG-000-5500
43-013-51198	LC TRIBAL 9-9D-56	2OG-000-5500
43-013-51076	LC Tribal 11-24-45	2OG-000-5500
43-013-32931	MOON TRIBAL 10-2-54	14-20-H62-3404
43-013-32540	MOON TRIBAL 10-27-54	14-20-H62-3375
43-013-32845	MOON TRIBAL 11-27-54	14-20-H62-3375
43-013-32347	MOON TRIBAL 12-23-54	14-20-H62-4943
43-013-32541	MOON TRIBAL 12-27-54	14-20-H62-3375
43-013-32937	MOON TRIBAL 1-27-54	14-20-H62-3375
43-013-32801	MOON TRIBAL 13-27-54	14-20-H62-3375
43-013-32408	MOON TRIBAL 14-27-54	14-20-H62-3375
43-013-32846	MOON TRIBAL 15-27-54	14-20-H62-3375
43-013-32927	MOON TRIBAL 16-23-54	14-20-H62-4943
43-013-34109	MOON TRIBAL 16-27D-54	14-20-H62-3375
43-013-32613	MOON TRIBAL 3-27-54	14-20-H62-3375
43-013-32800	MOON TRIBAL 4-23-54	14-20-H62-4943
43-013-32938	MOON TRIBAL 5-23-54	14-20-H62-4943
43-013-32802	MOON TRIBAL 5-27-54	14-20-H62-3375
43-013-32843	MOON TRIBAL 6-23-54	14-20-H62-4943
43-013-32407	MOON TRIBAL 6-27-54	14-20-H62-3375
43-013-33365	MOON TRIBAL 7-27D-54	14-20-H62-3375
43-013-32543	MOON TRIBAL 8-27-54	14-20-H62-3375
43-013-32782	MYRIN TRIBAL 14-19-55	14-20-H62-5058
43-013-32934	MYRIN TRIBAL 16-19-55	14-20-H62-5058
43-013-33152	NIELSEN FEE 13-11-56	14-20-H62-5620
43-013-32737	NIELSEN MARSING 13-14-56	FEE
43-013-31131	S BRUNDAGE CYN UTE TRIBAL 4-27	14-20-H62-3375
43-013-30948	S BRUNDAGE UTE TRIBAL 1-30	14-20-H62-3417
43-013-30933	S COTTONWOOD RIDGE UTE TRIBAL 1-19	14-20-H62-4919
43-007-30890	SCOFIELD THORPE 22-41X RIG SKID	FEE
43-007-31001	SCOFIELD-THORPE 23-31	FEE
43-007-30991	SCOFIELD-THORPE 35-13	FEE
43-013-50686	SFW FEE 14-10D-54	FEE
43-013-50247	SFW FEE 15-10-54	FEE

43-013-34295	SFW TRIBAL 10-10D-54	14-20-H62-5517
43-013-34296	SFW TRIBAL 9-10D-54	14-20-H62-5517
43-013-31701	SOWERS CANYON 9-27	14-20-H62-4753/UTU-76967
43-013-30955	SOWERS CYN UTE TRIBAL 3-26	14-20-H62-3444
43-013-33916	ST TRIBAL 1-15D-54	14-20-H62-4661
43-013-32849	ST TRIBAL 2-15-54	14-20-H62-4661
43-013-34059	ST TRIBAL 3-15D-54	14-20-H62-4661
43-013-32850	ST TRIBAL 4-15-54	14-20-H62-4661
43-013-34060	ST TRIBAL 5-15D-54	14-20-H62-4661
43-013-32848	ST TRIBAL 6-15-54	14-20-H62-4661
43-013-33950	ST TRIBAL 7-15D-54	14-20-H62-4661
43-013-32851	ST TRIBAL 8-15-54	14-20-H62-4661
43-013-33951	ST TRIBAL 9-15D-54	14-20-H62-4661
43-013-50245	STATE TRIBAL 16-10-54	14-20-H62-5517
43-013-32953	STATE TRIBAL 5-18-54	14-20-H62-5035
43-013-32952	STATE TRIBAL 7-18-54	14-20-H62-5035
43-013-30999	T C UTE TRIBAL 9-23X	14-20-H62-3443
43-013-31699	TABBY CANYON 1-21	14-20-H62-4825/UTU-76965
43-013-31700	TABBY CANYON 8-22	14-20-H62-4754/UTU-76966
43-013-30945	TABBY CYN UTE TRIBAL 1-25	14-20-H62-3537
43-013-33121	TAYLOR FEE 13-22-56	FEE
43-013-33140	TAYLOR FEE 7-14-56	FEE
43-013-32738	TAYLOR HERRICK 10-22-56	FEE
43-013-51271	UTE FEE 14-9D-54	FEE
43-013-51272	UTE FEE 15-9D-54	FEE
43-013-33720	UTE FEE 2-13-55	FEE
43-013-51259	UTE FEE 9-9-54	FEE
43-013-33055	UTE TRIBAL 10-12-55	14-20-H62-5056
43-013-33205	UTE TRIBAL 10-14-54	14-20-H62-5033
43-013-32601	UTE TRIBAL 10-14-55	14-20-H62-5016
43-013-32587	UTE TRIBAL 10-15-54	14-20-H62-4661
43-013-32977	UTE TRIBAL 10-15-55	14-20-H62-5017
43-013-33129	UTE TRIBAL 10-16-54	14-20-H62-3413
43-013-32345	UTE TRIBAL 10-16-55	14-20-H62-5024
43-013-33133	UTE TRIBAL 10-17-54	14-20-H62-4731
43-013-33300	UTE TRIBAL 10-18-54	14-20-H62-4919
43-013-32717	UTE TRIBAL 10-19-54	14-20-H62-3528
43-013-32740	UTE TRIBAL 10-20-54	14-20-H62-3529
43-013-32603	UTE TRIBAL 10-21-55	14-20-H62-4825
43-013-32592	UTE TRIBAL 10-22-54	14-20-H62-3415
43-013-33722	UTE TRIBAL 10-22D-55	14-20-H62-4754
43-013-33358	UTE TRIBAL 10-23D-55	14-20-H62-3443
43-013-32932	UTE TRIBAL 10-24-54	14-20-H62-4716
43-013-33156	UTE TRIBAL 10-24D-55	14-20-H62-4749
43-013-32749	UTE TRIBAL 10-25-55	14-20-H62-3537
43-013-33620	UTE TRIBAL 10-26D-54	14-20-H62-4954
43-013-33360	UTE TRIBAL 10-26D-55	14-20-H62-3444
43-013-33683	UTE TRIBAL 10-27D-55	14-20-H62-4753
43-013-32764	UTE TRIBAL 10-28-54	14-20-H62-4740

43-013-32419	UTE TRIBAL 10-28-55	14-20-H62-5019
43-013-33155	UTE TRIBAL 10-29-54	14-20-H62-5036
43-013-33157	UTE TRIBAL 10-29D-55	14-20-H62-5020
43-013-32847	UTE TRIBAL 10-31-54	14-20-H62-4946
43-013-32936	UTE TRIBAL 10-31-55	14-20-H62-5060
43-013-33902	UTE TRIBAL 10-32-54	14-20-H62-4947
43-013-33092	UTE TRIBAL 10-33-54	14-20-H62-4948
43-013-32353	UTE TRIBAL 10-35-55	14-20-H62-4945
43-013-33968	UTE TRIBAL 10-36D-55	14-20-H62-4944
43-013-50854	UTE TRIBAL 10S-21D-54	14-20-H62-3141
43-013-32721	UTE TRIBAL 11-12-55	14-20-H62-5518
43-013-32568	UTE TRIBAL 11-13-54	14-20-H62-4894
43-013-33268	UTE TRIBAL 11-13-55	14-20-H62-4845
43-013-32693	UTE TRIBAL 11-14-55	14-20-H62-5016
43-013-33206	UTE TRIBAL 11-15-54	14-20-H62-4661
43-013-32980	UTE TRIBAL 11-15-55	14-20-H62-5017
43-013-32589	UTE TRIBAL 11-16-54	14-20-H62-3413
43-013-32145	UTE TRIBAL 11-17	14-20-H62-4731
43-013-31547	UTE TRIBAL 11-19	14-20-H62-3528
43-013-32168	UTE TRIBAL 11-20	14-20-H62-3529
43-013-32415	UTE TRIBAL 11-20-55	14-20-H62-5018
43-013-33115	UTE TRIBAL 11-21-54	14-20-H62-3414
43-013-33116	UTE TRIBAL 11-22-54	14-20-H62-3415
43-013-32607	UTE TRIBAL 11-22-55	14-20-H62-4754
43-013-32269	UTE TRIBAL 11-23-55	14-20-H62-3443
43-013-31909	UTE TRIBAL 11-24	14-20-H62-4749
43-013-31911	UTE TRIBAL 11-25	14-20-H62-3537
43-013-32856	UTE TRIBAL 11-25-54	14-20-H62-3440
43-013-32990	UTE TRIBAL 11-25-56	14-20-H62-5065
43-013-32844	UTE TRIBAL 11-26-54	14-20-H62-4954
43-013-33478	UTE TRIBAL 11-26D-55	14-20-H62-3444
43-013-32615	UTE TRIBAL 11-27-55	14-20-H62-4753
43-013-32192	UTE TRIBAL 11-28	14-20-H62-4740
43-013-34057	UTE TRIBAL 11-28-55	14-20-H62-5019
43-013-32563	UTE TRIBAL 11-29-54	14-20-H62-5032
43-013-32512	UTE TRIBAL 11-30-54	14-20-H62-4662
43-013-32530	UTE TRIBAL 11-31-54	14-20-H62-4946
43-013-33793	UTE TRIBAL 11-32D-54	14-20-H62-4947
43-013-32522	UTE TRIBAL 11-33-54	14-20-H62-4948
43-013-33783	UTE TRIBAL 11-35-55	14-20-H62-5053
43-013-33214	UTE TRIBAL 11-36D-55	14-20-H62-4944
43-013-33769	UTE TRIBAL 1-14D-54	14-20-H62-5033
43-013-33279	UTE TRIBAL 1-14D-55	14-20-H62-5016
43-013-32664	UTE TRIBAL 11-5-54	14-20-H62-5516
43-013-32978	UTE TRIBAL 1-15-55	14-20-H62-5017
43-013-33128	UTE TRIBAL 1-16-54	14-20-H62-3413
43-013-30966	UTE TRIBAL 1-20	14-20-H62-3529
43-013-32414	UTE TRIBAL 1-20-55	14-20-H62-5018
43-013-32369	UTE TRIBAL 12-14-54	14-20-H62-5033

43-013-50476	UTE TRIBAL 12-14D-55	14-20-H62-4661
43-013-32205	UTE TRIBAL 12-15	14-20-H62-5017
43-013-32981	UTE TRIBAL 12-15-55	14-20-H62-3413
43-013-33131	UTE TRIBAL 12-16-54	14-20-H62-4919
43-013-32146	UTE TRIBAL 12-17	14-20-H62-5035
43-013-33077	UTE TRIBAL 12-18-54	14-20-H62-3528
43-013-32716	UTE TRIBAL 12-19-54	14-20-H62-3529
43-013-32866	UTE TRIBAL 12-20-54	14-20-H62-3414
43-013-32385	UTE TRIBAL 12-21-54	14-20-H62-4825
43-013-33694	UTE TRIBAL 12-21D-55	14-20-H62-4754
43-013-32616	UTE TRIBAL 12-22-55	14-20-H62-3443
43-013-33908	UTE TRIBAL 12-23D-55	14-20-H62-4749
43-013-33134	UTE TRIBAL 12-24D-55	14-20-H62-4749
43-013-32769	UTE TRIBAL 12-25-55	14-20-H62-3537
43-013-33801	UTE TRIBAL 12-26D-54	14-20-H62-3444
43-013-34118	UTE TRIBAL 12-26D-55	14-20-H62-4740
43-013-32765	UTE TRIBAL 12-28-54	14-20-H62-5019
43-013-33645	UTE TRIBAL 12-28D-55	14-20-H62-5036
43-013-32572	UTE TRIBAL 12-29-54	14-20-H62-5020
43-013-33418	UTE TRIBAL 12-29D-55	14-20-H62-5020
43-013-33215	UTE TRIBAL 1-22D-54	14-20-H62-3415
43-013-33626	UTE TRIBAL 1-22D-55	14-20-H62-4754
43-013-33907	UTE TRIBAL 12-31D-54	14-20-H62-4946
43-013-32925	UTE TRIBAL 12-32-54	14-20-H62-4947
43-013-33266	UTE TRIBAL 12-32-55	14-20-H62-5026
43-013-33090	UTE TRIBAL 12-33-54	14-20-562-4948
43-013-32524	UTE TRIBAL 1-23-55	14-20-H62-3443
43-013-33782	UTE TRIBAL 12-35D-55	14-20-H62-4945
43-013-32354	UTE TRIBAL 12-36-55	14-20-H62-4944
43-013-32259	UTE TRIBAL 1-24-55	14-20-H62-4749
43-013-31912	UTE TRIBAL 1-26	14-20-H62-3444
43-013-33680	UTE TRIBAL 1-26D-54	14-20-H62-4943
43-013-32416	UTE TRIBAL 1-27-55	14-20-H62-4753
43-013-31549	UTE TRIBAL 1-28	14-20-H62-4740
43-013-33784	UTE TRIBAL 1-28D-55	14-20-H62-5019
43-013-33184	UTE TRIBAL 12Q-25-55	14-20-H62-3537
43-013-32599	UTE TRIBAL 13-13-55	14-20-H62-4845
43-013-33364	UTE TRIBAL 13-14-54	14-20-H62-5033
43-013-32600	UTE TRIBAL 13-14-55	14-20-H62-5016
43-013-32526	UTE TRIBAL 1-31-54	14-20-H62-4946
43-013-32602	UTE TRIBAL 13-15-55	14-20-H62-5017
43-013-33039	UTE TRIBAL 13-15D-54	14-20-H662-4661
43-013-32511	UTE TRIBAL 13-16-54	14-20-H62-3413
43-013-31546	UTE TRIBAL 13-17	14-20-H62-4919
43-013-32571	UTE TRIBAL 13-18-54	14-20-H62-5032
43-013-31284	UTE TRIBAL 13-19	14-20-H62-3528
43-013-32206	UTE TRIBAL 13-20	14-20-H62-3529
43-013-32841	UTE TRIBAL 13-20-55	14-20-H62-5018
43-013-33113	UTE TRIBAL 13-21-54	14-20-H62-3414

43-013-31548	UTE TRIBAL 13-22	14-20-H62-3415
43-013-33716	UTE TRIBAL 13-22D-55	14-20-H62-4754
43-013-32513	UTE TRIBAL 13-23-55	14-20-H62-3443
43-013-31910	UTE TRIBAL 13-24	14-20-H62-4749
43-013-32169	UTE TRIBAL 13-25	14-20-H62-3537
43-013-32891	UTE TRIBAL 13-26-54	14-20-H62-4954
43-013-34002	UTE TRIBAL 13-26D-55	14-20-H62-3444
43-013-32387	UTE TRIBAL 13-28-54	14-20-H62-4740
43-013-33646	UTE TRIBAL 13-28D-55	14-20-H62-5019
43-013-32564	UTE TRIBAL 13-29-54	14-20-H62-5032
43-013-33501	UTE TRIBAL 1-31-55	14-20-H62-5060
43-013-30872	UTE TRIBAL 1-32R	14-20-H62-4947
43-013-32185	UTE TRIBAL 1-33	14-20-H62-4948
43-013-32409	UTE TRIBAL 13-30-54	14-20-H62-4662
43-013-32688	UTE TRIBAL 13-31-54	14-20-H62-4946
43-013-32692	UTE TRIBAL 13-32-54	14-20-H62-4947
43-013-32742	UTE TRIBAL 13-33-54	14-20-H62-4948
43-013-32806	UTE TRIBAL 13-35-54	14-20-H62-5053
43-013-34117	UTE TRIBAL 13-35D-55	14-20-H62-4945
43-013-33624	UTE TRIBAL 13-36D-55	14-20-H62-4944
43-013-32186	UTE TRIBAL 1-34	14-20-H62-4955
43-013-50408	UTE TRIBAL 1-34D-55	14-20-H62-5028
43-013-32567	UTE TRIBAL 1-35-54	14-20-H62-5032
43-013-33967	UTE TRIBAL 1-35D-55	14-20-H62-4945
43-013-32760	UTE TRIBAL 1-36-55	14-20-H62-4944
43-013-33380	UTE TRIBAL 13H-16-55	14-20-H62-5024
43-013-33112	UTE TRIBAL 14-14-54	14-20-H62-5033
43-013-32979	UTE TRIBAL 14-15-55	14-20-H62-5017
43-013-33123	UTE TRIBAL 14-16-54	14-20-H62-3413
43-013-32147	UTE TRIBAL 14-17	14-20-H62-4919
43-013-32984	UTE TRIBAL 14-18-55	14-20-H62-5057
43-013-32690	UTE TRIBAL 14-19-54	14-20-H62-3528
43-013-32702	UTE TRIBAL 14-20-54	14-20-H62-3529
43-013-32384	UTE TRIBAL 14-21-54	14-20-H62-3414
43-013-32593	UTE TRIBAL 14-22-54	14-20-H62-3415
43-013-33717	UTE TRIBAL 14-22D-55	14-20-H62-4754
43-013-33915	UTE TRIBAL 14-23D-55	14-20-H62-3443
43-013-33912	UTE TRIBAL 14-24D-55	14-20-H62-4749
43-013-32988	UTE TRIBAL 14-24-56	14-20-H62-5064
43-013-33912	UTE TRIBAL 14-24D-55	14-20-H62-4749
43-013-32776	UTE TRIBAL 14-25-54	14-20-H62-3440
43-013-32750	UTE TRIBAL 14-25-55	14-20-H62-3537
43-013-33673	UTE TRIBAL 14-26D-54	14-20-H62-4954
43-013-33361	UTE TRIBAL 14-26D-55	14-20-H62-3444
43-013-33684	UTE TRIBAL 14-27D-55	14-20-H62-4753
43-013-32348	UTE TRIBAL 14-28-55	14-20-H62-5019
43-013-33278	UTE TRIBAL 14-28D-54	14-20-H62-5036
43-013-33042	UTE TRIBAL 14-31D-54	14-20-H62-4946
43-013-32523	UTE TRIBAL 14-32-54	14-20-H62-4947

43-013-33093	UTE TRIBAL 14-33-54	14-20-H62-4949
43-013-33955	UTE TRIBAL 14-35D-55	14-20-H62-4945
43-013-32355	UTE TRIBAL 14-36-55	14-20-H62-4944
43-013-33277	UTE TRIBAL 14Q-28-54	14-20-H62-4740
43-013-33479	UTE TRIBAL 14Q-30-54	14-20-H62-4662
43-013-33212	UTE TRIBAL 15-13D-55	14-20-H62-4845
43-013-32971	UTE TRIBAL 15-15-54	14-20-H62-4661
43-013-32855	UTE TRIBAL 15-15-55	14-20-H62-5017
43-013-31648	UTE TRIBAL 15-16	14-20-H62-3413
43-013-31649	UTE TRIBAL 15-17	14-20-H62-4731
43-013-32358	UTE TRIBAL 15-17-55	14-20-H62-5025
43-013-32148	UTE TRIBAL 15-18	14-20-H62-4919
43-013-31832	UTE TRIBAL 15-19	14-20-H62-3528
43-013-32386	UTE TRIBAL 15-20-54	14-20-H62-3529
43-013-33357	UTE TRIBAL 15-21-55	14-20-H62-3414
43-013-32617	UTE TRIBAL 15-22-55	14-20-H62-4754
43-013-34116	UTE TRIBAL 15-22D-54	14-20-H62-3415
43-013-31671	UTE TRIBAL 15-23	14-20-H62-3443
43-013-31129	UTE TRIBAL 15-24R	14-20-H62-4749
43-013-32271	UTE TRIBAL 15-25-55	14-20-H62-3537
43-013-33768	UTE TRIBAL 15-26D-54	14-20-H62-4954
43-013-33362	UTE TRIBAL 15-26D-55	14-20-H62-3444
43-013-32339	UTE TRIBAL 15-27-55	14-20-H62-4753
43-013-32389	UTE TRIBAL 15-28-54	14-20-H62-4740
43-013-32561	UTE TRIBAL 15-29-54	14-20-H62-5036
43-013-32382	UTE TRIBAL 15-30-54	14-20-H62-4662
43-013-32743	UTE TRIBAL 15-31-54	14-20-H62-4946
43-013-32666	UTE TRIBAL 15-32-54	14-20-H62-4947
43-013-32768	UTE TRIBAL 15-33-54	14-20-H62-4948
43-013-32804	UTE TRIBAL 15-35-54	14-20-H62-5053
43-013-33954	UTE TRIBAL 15-35D-55	14-20-H62-4945
43-013-33049	UTE TRIBAL 15-36-55	14-20-H62-4944
43-013-33327	UTE TRIBAL 16-13D-55	14-20-H62-4845
43-013-32272	UTE TRIBAL 16-14-55	14-20-H62-5016
43-013-32588	UTE TRIBAL 16-15-54	14-20-H62-4661
43-013-32757	UTE TRIBAL 16-16-55	14-20-H62-5024
43-013-33132	UTE TRIBAL 16-17-54	14-20-H62-4731
43-013-31650	UTE TRIBAL 16-18	14-20-H62-4919
43-013-32691	UTE TRIBAL 16-19-54	14-20-H62-3528
43-013-32739	UTE TRIBAL 16-20-54	14-20-H62-3529
43-013-32381	UTE TRIBAL 16-21-54	14-20-H62-3414
43-013-32842	UTE TRIBAL 16-22-54	14-20-H62-3415
43-013-33267	UTE TRIBAL 16-22D-55	14-20-H62-4754
43-013-33046	UTE TRIBAL 16-23-55	14-20-H-62-3443
43-013-32775	UTE TRIBAL 16-24-54	14-20-H62-4716
43-013-32672	UTE TRIBAL 16-24-55	14-20-H62-3440
43-013-32759	UTE TRIBAL 16-25-55	14-20-H62-3537
43-013-34042	UTE TRIBAL 16-26-54	14-20-H62-4954
43-013-33965	UTE TRIBAL 16-26D-55	14-20-H62-3444

43-013-33786	UTE TRIBAL 16-27D-55	14-20-H62-4753
43-013-33041	UTE TRIBAL 16-28D-54	14-20-H62-4740
43-013-33076	UTE TRIBAL 16-29-54	14-20-H62-5036
43-013-32349	UTE TRIBAL 16-29-55	14-20-H62-5020
43-013-32665	UTE TRIBAL 16-3-54	14-20-H62-4778
43-013-32718	UTE TRIBAL 16-30-54	14-20-H62-4662
43-013-33326	UTE TRIBAL 16-31D-54	14-20-H62-4946
43-013-32926	UTE TRIBAL 16-32D-54	14-20-H62-4947
43-013-33091	UTE TRIBAL 16-33-54	14-20-H62-4948
43-013-32352	UTE TRIBAL 16-35-55	14-20-H62-4945
43-013-32356	UTE TRIBAL 16-36-55	14-20-H62-4944
43-013-33393	UTE TRIBAL 1A-29-54	14-20-H62-5036
43-013-33186	UTE TRIBAL 1I-36-55	14-20-H62-4944
43-013-33111	UTE TRIBAL 2-14-54	14-20-H962-5033
43-013-32140	UTE TRIBAL 2-19	14-20-H62-4919
43-013-32974	UTE TRIBAL 2-20-54	14-20-H62-3529
43-013-33117	UTE TRIBAL 2-21-55	14-20-H62-4825
43-013-32591	UTE TRIBAL 2-22-54	14-20-H62-3415
43-013-32604	UTE TRIBAL 2-22-55	14-20-H62-4754
43-013-33045	UTE TRIBAL 2-23-55	14-20-H62-3443
43-013-32569	UTE TRIBAL 2-24-54	14-20-H62-4716
43-013-31833	UTE TRIBAL 2-25	14-20-H62-3537
43-013-32868	UTE TRIBAL 2-26-54	14-20-H62-4954
43-013-33979	UTE TRIBAL 2-26D-55	14-20-H62-3444
43-013-32179	UTE TRIBAL 2-27	14-20-H62-3375
43-013-33628	UTE TRIBAL 2-27D-55	14-20-H62-4753
43-013-32763	UTE TRIBAL 2-28-54	14-20-H62-4740
43-013-33714	UTE TRIBAL 2-29D-55	14-20-H62-5036
43-013-32680	UTE TRIBAL 2-30-55	14-20-H62-5059
43-013-32894	UTE TRIBAL 2-30D-54	14-20-H62-4662
43-013-32762	UTE TRIBAL 2-31-54	14-20-H62-4946
43-013-32935	UTE TRIBAL 2-31-55	14-20-H62-5060
43-013-32803	UTE TRIBAL 2-32-54	14-20-H62-4947
43-013-32350	UTE TRIBAL 2-32-55	14-20-H62-5026
43-013-32898	UTE TRIBAL 2-33D-54	14-20-H62-4948
43-013-32187	UTE TRIBAL 2-35	14-20-H62-4945
43-013-32422	UTE TRIBAL 2-36-55	14-20-H62-4944
43-013-32663	UTE TRIBAL 3-10-54	14-20-H62-5517
43-013-50478	UTE TRIBAL 3-14-55	14-20-H62-5016
43-013-50389	UTE TRIBAL 3-14D-54	14-20-H62-5033
43-013-31830	UTE TRIBAL 3-19	14-20-H62-3528
43-013-32377	UTE TRIBAL 3-20-54	14-20-H62-4919
43-013-32867	UTE TRIBAL 3-21-54	14-20-H62-3414
43-013-32758	UTE TRIBAL 3-21-55	14-20-H62-4825
43-013-33208	UTE TRIBAL 3-22-54	14-20-H62-3415
43-013-32605	UTE TRIBAL 3-22-55	14-20-H62-4754
43-013-32536	UTE TRIBAL 3-23-55	14-20-H62-3443
43-013-30960	UTE TRIBAL 3-24R-55 (REENTRY)	14-20-H62-4749
43-013-31834	UTE TRIBAL 3-25	14-20-H62-3537

43-013-32993	UTE TRIBAL 3-25-56	14-20-H62-5065
43-013-33681	UTE TRIBAL 3-26D-54	14-20-H62-4954
43-013-32417	UTE TRIBAL 3-27-55	14-20-H62-4753
43-013-32261	UTE TRIBAL 3-28-54	14-20-H62-4740
43-013-33723	UTE TRIBAL 3-29-55	14-20-H62-5020
43-013-32625	UTE TRIBAL 3-30-54	14-20-H62-4662
43-013-32862	UTE TRIBAL 3-30-55	14-20-H62-5059
43-013-32527	UTE TRIBAL 3-31-54	14-20-H62-4946
43-013-32410	UTE TRIBAL 3-32-54	14-20-H62-4947
43-013-33363	UTE TRIBAL 3-32D-55	14-20-H62-5206
43-013-32412	UTE TRIBAL 3-33-54	14-20-H62-4948
43-013-33888	UTE TRIBAL 3-35D-55	14-20-H62-5053
43-013-33888	UTE TRIBAL 3-35D-55	14-20-H62-4945
43-013-32751	UTE TRIBAL 3-36-55	14-20-H62-4944
43-013-33185	UTE TRIBAL 3G-31-54	14-20-H62-4946
43-013-33270	UTE TRIBAL 4-14D-54	14-20-H62-5033
43-013-32972	UTE TRIBAL 4-19-54	14-20-H62-3528
43-013-32621	UTE TRIBAL 4-20-54	14-20-H62-4919
43-013-33549	UTE TRIBAL 4-20D-55	14-20-H62-5018
43-013-32378	UTE TRIBAL 4-21-54	14-20-H62-3414
43-013-33044	UTE TRIBAL 4-22-55	14-20-H62-4754
43-013-33627	UTE TRIBAL 4-23D-55	14-20-H62-3443
43-013-32573	UTE TRIBAL 4-24-54	14-20-H62-4716
43-013-33726	UTE TRIBAL 4-24D-55	14-20-H62-4749
43-013-32928	UTE TRIBAL 4-25-55	14-20-H62-3537
43-013-33595	UTE TRIBAL 4-26D-54	14-20-H62-4954
43-013-33978	UTE TRIBAL 4-26D-55	14-20-H62-3444
43-013-33797	UTE TRIBAL 4-27D-55	14-20-H62-4753
43-013-32741	UTE TRIBAL 4-28-54	14-20-H62-4740
43-013-33118	UTE TRIBAL 4-28-55	14-20-H62-5019
43-013-32565	UTE TRIBAL 4-29-54	14-20-H62-5036
43-013-31550	UTE TRIBAL 4-30	14-20-H62-4662
43-013-32767	UTE TRIBAL 4-31-54	14-20-H62-4946
43-013-32896	UTE TRIBAL 4-32-54	14-20-H62-4947
43-013-33379	UTE TRIBAL 4-32-55	14-20-H62-5026
43-013-32871	UTE TRIBAL 4-33-54	14-20-H62-4948
43-013-32357	UTE TRIBAL 4-33-55	14-20-H62-5027
43-013-32188	UTE TRIBAL 4-36	14-20-H62-4944
43-013-31152	UTE TRIBAL 5-13	14-20-H62-4845
43-013-33075	UTE TRIBAL 5-13-54	14-20-H62-4894
43-013-33619	UTE TRIBAL 5-14-54	14-20-H62-5033
43-013-50479	UTE TRIBAL 5-14-55	14-20-H62-5016
43-013-32344	UTE TRIBAL 5-15-55	14-20-H62-5017
43-013-50475	UTE TRIBAL 5-16D-54	14-20-H62-3413
43-013-32204	UTE TRIBAL 5-19	14-20-H62-3528
43-013-31651	UTE TRIBAL 5-20	14-20-H62-4919
43-013-33324	UTE TRIBAL 5-21-54	14-20-H62-3414
43-013-33706	UTE TRIBAL 5-21D-55	14-20-H62-4825
43-013-32624	UTE TRIBAL 5-22-54	14-20-H62-3415

43-013-32537	UTE TRIBAL 5-23-55	14-20-H62-3443
43-013-32263	UTE TRIBAL 5-24-55	14-20-H62-4749
43-013-32992	UTE TRIBAL 5-25-56	14-20-H62-5065
43-013-33421	UTE TRIBAL 5-25D-55	14-20-H62-3537
43-013-32890	UTE TRIBAL 5-26-54	14-20-H62-4954
43-013-32264	UTE TRIBAL 5-26-55	14-20-H62-3444
43-013-32614	UTE TRIBAL 5-27-55	14-20-H62-4753
43-013-32189	UTE TRIBAL 5-28	14-20-H62-4740
43-013-32525	UTE TRIBAL 5-29-54	14-20-H62-5032
43-013-32380	UTE TRIBAL 5-30-54	14-20-H62-4662
43-013-32190	UTE TRIBAL 5-31	14-20-H62-4946
43-013-32539	UTE TRIBAL 5-32-54	14-20-H62-4947
43-013-32521	UTE TRIBAL 5-33-54	14-20-H62-4948
43-013-32805	UTE TRIBAL 5-35-54	14-20-H62-5053
43-013-32930	UTE TRIBAL 5-36-55	14-20-H62-4944
43-013-32586	UTE TRIBAL 6-14-54	14-20-H62-5033
43-013-50246	UTE TRIBAL 6-14D-55	14-20-H62-5016
43-013-32865	UTE TRIBAL 6-19-54	14-20-H62-3528
43-013-32622	UTE TRIBAL 6-20-54	14-20-H62-4919
43-013-32164	UTE TRIBAL 6-21	14-20-H62-3414
43-013-32163	UTE TRIBAL 6-22	14-20-H62-3415
43-013-33213	UTE TRIBAL 6-22D-55	14-20-H62-4728
43-013-33187	UTE TRIBAL 6-23D-55	14-20-H62-3443
43-013-32570	UTE TRIBAL 6-24-54	14-20-H62-4716
43-013-32143	UTE TRIBAL 6-25H	14-20-H62-3537
43-013-33625	UTE TRIBAL 6-26D-54	14-20-H62-4954
43-013-33476	UTE TRIBAL 6-26D-55	14-20-H62-3444
43-013-32892	UTE TRIBAL 6-28D-54	14-20-H62-4740
43-013-33172	UTE TRIBAL 6-29-54	14-20-H62-5036
43-013-33120	UTE TRIBAL 6-29-55	14-20-H62-5020
43-013-32783	UTE TRIBAL 6-30-55	14-20-H62-5059
43-013-33325	UTE TRIBAL 6-31D-54	14-20-H62-4946
43-013-32420	UTE TRIBAL 6-32-55	14-20-H62-5026
43-013-32897	UTE TRIBAL 6-32D-54	14-20-H62-4947
43-013-32872	UTE TRIBAL 6-33-54	14-20-H62-4948
43-013-34028	UTE TRIBAL 6-35D-55	14-20-H62-4945
43-013-32265	UTE TRIBAL 6-36-55	14-20-H62-4944
43-013-50409	UTE TRIBAL 7-14-54	14-20-H62-5033
43-013-33269	UTE TRIBAL 7-14-55	14-20-H62-5016
43-013-32976	UTE TRIBAL 7-15-55	14-20-H62-5017
43-013-33130	UTE TRIBAL 7-16-54	14-20-H62-3413
43-013-32863	UTE TRIBAL 7-19-55	14-20-H62-5058
43-013-32346	UTE TRIBAL 7-20-55	14-20-H62-5018
43-013-31281	UTE TRIBAL 7-20R-54	14-20-H62-3529
43-013-32623	UTE TRIBAL 7-21-54	14-20-H62-3414
43-013-32761	UTE TRIBAL 7-22-54	14-20-H62-3415
43-013-33721	UTE TRIBAL 7-22D-55	14-20-H62-4754
43-013-32514	UTE TRIBAL 7-23-55	14-20-H62-3443
43-013-32991	UTE TRIBAL 7-24-56	14-20-H62-5064

43-013-32991	UTE TRIBAL 7-25-56	14-20-H62-5065
43-013-33621	UTE TRIBAL 7-26D-54	14-20-H62-4954
43-013-33477	UTE TRIBAL 7-26D-55	14-20-H62-3444
43-013-32418	UTE TRIBAL 7-27-55	14-20-H62-4753
43-013-32166	UTE TRIBAL 7-28	14-20-H62-4740
43-013-33788	UTE TRIBAL 7-28D-55	14-20-H62-5019
43-013-32562	UTE TRIBAL 7-29-54	14-20-H62-5036
43-013-33715	UTE TRIBAL 7-29D-55	14-20-H62-5020
43-013-32167	UTE TRIBAL 7-30	14-20-H62-4662
43-013-32528	UTE TRIBAL 7-31-54	14-20-H62-4946
43-013-32411	UTE TRIBAL 7-32-54	14-20-H62-4947
43-013-32413	UTE TRIBAL 7-33-54	14-20-H62-4948
43-013-50510	UTE TRIBAL 7-34-55	14-20-H62-5028
43-013-32774	UTE TRIBAL 7-35-54	14-20-H62-5053
43-013-33048	UTE TRIBAL 7-35-55	14-20-H62-4945
43-013-32929	UTE TRIBAL 7-36-55	14-20-H62-4944
43-013-50852	UTE TRIBAL 7I-21-54	14-20-H62-3414
43-013-50488	UTE TRIBAL 8-10D-54	14-20-H62-5517
43-013-33204	UTE TRIBAL 8-14-54	14-20-H62-5033
43-013-50477	UTE TRIBAL 8-15D-55	14-20-H62-5017
43-013-32840	UTE TRIBAL 8-19-54	14-20-H62-3528
43-013-32864	UTE TRIBAL 8-19-55	14-20-H62-5058
43-013-32973	UTE TRIBAL 8-20-54	14-20-H62-3529
43-013-50435	UTE TRIBAL 8-21D-55	14-20-H62-4825
43-013-32590	UTE TRIBAL 8-22-54	14-20-H62-3415
43-013-33552	UTE TRIBAL 8-23D-55	14-20-H62-3443
43-013-33420	UTE TRIBAL 8-24-55	14-20-H62-4716
43-013-32780	UTE TRIBAL 8-25-54	14-20-H62-3440
43-013-32620	UTE TRIBAL 8-25-55	14-20-H62-3537
43-013-33682	UTE TRIBAL 8-26D-54	14-20-H62-4954
43-013-33859	UTE TRIBAL 8-26D-55	14-20-H62-3444
43-013-34058	UTE TRIBAL 8-27D-55	14-20-H62-4753
43-013-32766	UTE TRIBAL 8-28-54	14-20-H62-4740
43-013-32694	UTE TRIBAL 8-28-55	14-20-H62-5019
43-013-33119	UTE TRIBAL 8-29-55	14-20-H62-5020
43-013-32746	UTE TRIBAL 8-30-54	14-20-H62-4662
43-013-32869	UTE TRIBAL 8-31-54	14-20-H62-4946
43-013-32673	UTE TRIBAL 8-31-55	14-20-H62-5032
43-013-32870	UTE TRIBAL 8-32-54	14-20-H62-4947
43-013-32421	UTE TRIBAL 8-32-55	14-20-H62-5026
43-013-33089	UTE TRIBAL 8-33-54	14-20-H62-4948
43-013-50436	UTE TRIBAL 8-34D-55	14-20-H62-5028
43-013-32267	UTE TRIBAL 8-35-55	14-20-H62-4945
43-013-32423	UTE TRIBAL 8-36-55	14-20-H62-4944
43-013-50853	UTE TRIBAL 8L-21D-54	14-20-H62-3141
43-013-33328	UTE TRIBAL 9-13D-55	14-20-H62-4845
43-013-33796	UTE TRIBAL 9-14D-54	14-20-H62-5033
43-013-32701	UTE TRIBAL 9-15-55	14-20-H62-5017
43-013-33207	UTE TRIBAL 9-16-54	14-20-H62-3413

43-013-32687	UTE TRIBAL 9-17-54	14-20-H62-4731
43-013-32144	UTE TRIBAL 9-18	14-20-H62-4919
43-013-31831	UTE TRIBAL 9-19	14-20-H62-3528
43-013-32379	UTE TRIBAL 9-20-54	14-20-H62-3529
43-013-33675	UTE TRIBAL 9-20D-55	14-20-H62-5018
43-013-33040	UTE TRIBAL 9-21-54	14-20-H62-3414
43-013-32889	UTE TRIBAL 9-22-54	14-20-H62-3415
43-013-32606	UTE TRIBAL 9-22-55	14-20-H62-4754
43-013-32268	UTE TRIBAL 9-24-55	14-20-H62-4749
43-013-32390	UTE TRIBAL 9-25-55	14-20-H62-3537
43-013-32191	UTE TRIBAL 9-26	14-20-H62-4728
43-013-33359	UTE TRIBAL 9-26D-55	14-20-H62-3444
43-013-32388	UTE TRIBAL 9-28-54	14-20-H62-4740
43-013-33787	UTE TRIBAL 9-28D-55	14-20-H62-5019
43-013-32566	UTE TRIBAL 9-29-54	14-20-H62-5036
43-013-32383	UTE TRIBAL 9-30-54	14-20-H62-4662
43-013-32529	UTE TRIBAL 9-31-54	14-20-H62-4946
43-013-33508	UTE TRIBAL 9-31-55	14-20-H62-5060
43-013-32538	UTE TRIBAL 9-32-54	14-20-H62-4947
43-013-32549	UTE TRIBAL 9-33-54	14-20-H62-4948
43-013-32781	UTE TRIBAL 9-35-54	14-20-H62-5053
43-013-33047	UTE TRIBAL 9-35-55	14-20-H62-4945
43-013-33239	UTE TRIBAL 9-36D-55	14-20-H62-4944
43-013-33276	UTE TRIBAL 9S-19-54	14-20-H62-3528
43-013-33245	UTE TRIBAL 9S-25-55	14-20-H62-3537
43-013-50997	Vieira Tribal 4-4-54	14-20-H62-5659
43-013-33122	WILCOX ELIASON 7-15-56	FEE
43-013-33150	WILCOX FEE 1-20-56	FEE
43-013-33151	WILCOX FEE 15-16-56	FEE
43-013-32550	WILLIAMSON TRIBAL 3-34-54	14-20-H62-4955
43-013-32551	WILLIAMSON TRIBAL 5-34-54	14-20-H62-4955
43-013-31311	Z and T UTE TRIBAL 12-22	14-20-H62-3415
43-013-31280	Z and T UTE TRIBAL 2-21	14-20-H62-3414
43-013-31282	Z and T UTE TRIBAL 7-19	14-20-H62-4919
43-013-31310	Z and T UTE TRIBAL 7-25	14-20-H62-3537

Division of Oil, Gas and Mining

OPERATOR CHANGE WORKSHEET (for state use only)

ROUTING
CDW

X - Change of Operator (Well Sold) Operator Name Change/Merger

The operator of the well(s) listed below has changed, effective: **6/1/2014**

FROM: (Old Operator):	**TO:** (New Operator):
Berry Petroelum Company, LLC N4075	Linn Operating, Inc. N4115
1999 Broadway Street , Suite 3700	1999 Broadway Street, Suite 3700
Denver, CO 80202	Denver, CO 80202
Phone: 1 (303) 999-4400	Phone: 1 (303) 999-4400

CA No. **Unit:** **Berry Pilot EOR 246-02 Brundage Canyon**

WELL NAME	SEC	TWN	RNG	API NO	ENTITY NO	LEASE TYPE	WELL TYPE	WELL STATUS
See Attached List								

OPERATOR CHANGES DOCUMENTATION

Enter date after each listed item is completed

1. (R649-8-10) Sundry or legal documentation was received from the **FORMER** operator on: 6/13/2014
2. (R649-8-10) Sundry or legal documentation was received from the **NEW** operator on: 6/13/2014
3. The new company was checked on the **Department of Commerce, Division of Corporations Database on:** 6/17/2014
4a. Is the new operator registered in the State of Utah: _____ Business Number: 9031632-0143
5a. (R649-9-2)Waste Management Plan has been received on: N/A
5b. Inspections of LA PA state/fee well sites complete on: Yes
5c. Reports current for Production/Disposition & Sundries on: 6/17/2014
6. **Federal and Indian Lease Wells:** The BLM and or the BIA has approved the merger, name change, or operator change for all wells listed on Federal or Indian leases on: BLM Not Yet BIA Not Yet
7. **Federal and Indian Units:**
   The BLM or BIA has approved the successor of unit operator for wells listed on: Not Yet
8. **Federal and Indian Communization Agreements ("CA"):**
   The BLM or BIA has approved the operator for all wells listed within a CA on: N/A
9. **Underground Injection Control ("UIC")** Division has approved UIC Form 5 Transfer of Authority to **Inject,** for the enhanced/secondary recovery unit/project for the water disposal well(s) listed on: N/A

DATA ENTRY:

1. Changes entered in the **Oil and Gas Database on:** 6/18/2014
2. Changes have been entered on the **Monthly Operator Change Spread Sheet on:** 6/18/2014
3. Bond information entered in RBDMS on: 6/23/2014
4. Fee/State wells attached to bond in RBDMS on: 6/23/2014
5. Injection Projects to new operator in RBDMS on: N/A
6. Receipt of Acceptance of Drilling Procedures for APD/New on: 6/18/2014
7. Surface Agreement Sundry from **NEW** operator on Fee Surface wells received on: Yes

BOND VERIFICATION:

1. Federal well(s) covered by Bond Number: NMB000501
2. Indian well(s) covered by Bond Number: NMB000501
3a. (R649-3-1) The **NEW** operator of any state/fee well(s) listed covered by Bond Number LPM9149893
3b. The **FORMER** operator has requested a release of liability from their bond on: N/A

LEASE INTEREST OWNER NOTIFICATION:

4. (R649-2-10) The **NEW** operator of the fee wells has been contacted and informed by a letter from the Division of their responsibility to notify all interest owners of this change on: 6/23/2014

COMMENTS:

STATE OF UTAH
DEPARTMENT OF NATURAL RESOURCES
DIVISION OF OIL, GAS AND MINING

FORM 9

SUNDRY NOTICES AND REPORTS ON WELLS

Do not use this form for proposals to drill new wells, significantly deepen existing wells below current bottom-hole depth, reenter plugged wells, or to drill horizontal laterals. Use APPLICATION FOR PERMIT TO DRILL form for such proposals.

5. LEASE DESIGNATION AND SERIAL NUMBER: See attached list

6. IF INDIAN, ALLOTTEE OR TRIBE NAME:

7. UNIT or CA AGREEMENT NAME:

1. TYPE OF WELL: OIL WELL ☑ GAS WELL ☐ OTHER

8. WELL NAME and NUMBER:

2. NAME OF OPERATOR: Linn Operating, Inc.

9. API NUMBER:

3. ADDRESS OF OPERATOR: 1999 Broadway, Ste 3700 CITY Denver STATE CO ZIP 80202

PHONE NUMBER: (303) 999-4400

10. FIELD AND POOL, OR WILDCAT:

4. LOCATION OF WELL

FOOTAGES AT SURFACE:

COUNTY:

QTR/QTR, SECTION, TOWNSHIP, RANGE, MERIDIAN:

STATE: UTAH

11. CHECK APPROPRIATE BOXES TO INDICATE NATURE OF NOTICE, REPORT, OR OTHER DATA

TYPE OF SUBMISSION	TYPE OF ACTION		
☑ NOTICE OF INTENT (Submit in Duplicate)	☐ ACIDIZE	☐ DEEPEN	☐ REPERFORATE CURRENT FORMATION
Approximate date work will start:	☐ ALTER CASING	☐ FRACTURE TREAT	☐ SIDETRACK TO REPAIR WELL
	☐ CASING REPAIR	☐ NEW CONSTRUCTION	☐ TEMPORARILY ABANDON
	☐ CHANGE TO PREVIOUS PLANS	☐ OPERATOR CHANGE	☐ TUBING REPAIR
	☐ CHANGE TUBING	☐ PLUG AND ABANDON	☐ VENT OR FLARE
☐ SUBSEQUENT REPORT (Submit Original Form Only)	☐ CHANGE WELL NAME	☐ PLUG BACK	☐ WATER DISPOSAL
Date of work completion:	☐ CHANGE WELL STATUS	☐ PRODUCTION (START/RESUME)	☐ WATER SHUT-OFF
	☐ COMMINGLE PRODUCING FORMATIONS	☐ RECLAMATION OF WELL SITE	☑ OTHER: Change of operator
	☐ CONVERT WELL TYPE	☐ RECOMPLETE - DIFFERENT FORMATION	

12. DESCRIBE PROPOSED OR COMPLETED OPERATIONS. Clearly show all pertinent details including dates, depths, volumes, etc.

Notice of Change of Operator from Berry Petroleum Company, LLC to Linn Operating, Inc., effective June 1, 2014. On December 16, 2013, Berry Petroleum Company became an indirect subsidiary of Linn Energy, LLC. As a result, Berry Petroleum Company converted into a limited liability company named, "Berry Petroleum Company, LLC". On March 5, 2014, Berry Petroleum Company, LLC authorized and empowered Linn Operating, Inc. to act as operator on its behalf. I have attached a copy of the original declaration amending the name change along with a copy of the agency agreement and power of attorney for the operator change.

RECEIVED
JUN 1 3 2014
Div. of Oil, Gas & Mining

NAME (PLEASE PRINT) Beverly Decker TITLE Sr Engineering Technician

SIGNATURE Beverly Decker DATE 6/1/2014

(This space for State use only)

APPROVED
JUN 18 2014
DIV. OIL GAS & MINING
BY: Rachel Medina

(5/2000) (See Instructions on Reverse Side)

STATE OF UTAH
DEPARTMENT OF NATURAL RESOURCES
DIVISION OF OIL, GAS AND MINING

FORM 9

SUNDRY NOTICES AND REPORTS ON WELLS

Do not use this form for proposals to drill new wells, significantly deepen existing wells below current bottom-hole depth, reenter plugged wells, or to drill horizontal laterals. Use APPLICATION FOR PERMIT TO DRILL form for such proposals.

5. LEASE DESIGNATION AND SERIAL NUMBER: See attached list

6. IF INDIAN, ALLOTTEE OR TRIBE NAME:

7. UNIT or CA AGREEMENT NAME:

1. TYPE OF WELL: OIL WELL ☑ GAS WELL ☐ OTHER

8. WELL NAME and NUMBER:

2. NAME OF OPERATOR: Berry Petroleum Company, LLC

9. API NUMBER:

3. ADDRESS OF OPERATOR: 1999 Broadway, Ste 3700 CITY Denver STATE CO ZIP 80202

PHONE NUMBER: (303) 999-4400

10. FIELD AND POOL, OR WILDCAT:

4. LOCATION OF WELL

FOOTAGES AT SURFACE:

COUNTY:

QTR/QTR, SECTION, TOWNSHIP, RANGE, MERIDIAN:

STATE: UTAH

11. CHECK APPROPRIATE BOXES TO INDICATE NATURE OF NOTICE, REPORT, OR OTHER DATA

TYPE OF SUBMISSION	TYPE OF ACTION		
☑ NOTICE OF INTENT (Submit in Duplicate)	☐ ACIDIZE	☐ DEEPEN	☐ REPERFORATE CURRENT FORMATION
Approximate date work will start:	☐ ALTER CASING	☐ FRACTURE TREAT	☐ SIDETRACK TO REPAIR WELL
	☐ CASING REPAIR	☐ NEW CONSTRUCTION	☐ TEMPORARILY ABANDON
	☐ CHANGE TO PREVIOUS PLANS	☐ OPERATOR CHANGE	☐ TUBING REPAIR
	☐ CHANGE TUBING	☐ PLUG AND ABANDON	☐ VENT OR FLARE
☐ SUBSEQUENT REPORT (Submit Original Form Only)	☐ CHANGE WELL NAME	☐ PLUG BACK	☐ WATER DISPOSAL
Date of work completion:	☐ CHANGE WELL STATUS	☐ PRODUCTION (START/RESUME)	☐ WATER SHUT-OFF
	☐ COMMINGLE PRODUCING FORMATIONS	☐ RECLAMATION OF WELL SITE	☑ OTHER: Change of operator
	☐ CONVERT WELL TYPE	☐ RECOMPLETE - DIFFERENT FORMATION	

12. DESCRIBE PROPOSED OR COMPLETED OPERATIONS. Clearly show all pertinent details including dates, depths, volumes, etc.

On December 16th, 2013 Berry Petroleum Company and Linn Energy merged. As a result of this merger the companies name has changed to "Berry Petroleum Company, LLC". On March 5th, 2014 Berry Petroleum Company, LLC agreed that Linn Operating, Inc would become the operator of record effective June 1, 2014. I have attached a copy of the original declaration amending the name change along with a copy of the agency agreement and power of attorney for the operator change.

Should you have any questions please don't hesitate to contact me.

RECEIVED
JUN 1 3 2014
Div. of Oil, Gas & Mining

NAME (PLEASE PRINT) Beverly Decker TITLE Sr Engineering Technician

SIGNATURE Beverly Decker DATE 6/1/2014

(This space for State use only)

APPROVED
JUN 18 2014
DIV. OIL GAS & MINING
BY: Rachel Medina

(5/2000) (See Instructions on Reverse Side)

STATE OF UTAH
DEPARTMENT OF NATURAL RESOURCES
DIVISION OF OIL, GAS AND MINING

Request to Transfer Application or Permit to Drill

(This form should accompany a Sundry Notice, Form 9, requesting APD transfer)

Well name:	See Attached
API number:	
Location:	Qtr-Qtr: Section Township Range:
Company that filed original application:	Berry Petroleum Company LLC
Date original permit was issued:	
Company that permit was issued to:	Linn Operating, Inc

Check one	Desired Action:
	Transfer pending (unapproved) Application for Permit to Drill to new operator
	The undersigned as owner with legal rights to drill on the property, hereby verifies that the information as submitted in the pending Application for Permit to Drill, remains valid and does not require revision. The new owner of the application accepts and agrees to the information and procedures as stated in the application.
✓	**Transfer approved Application for Permit to Drill to new operator**
	The undersigned as owner with legal rights to drill on the property as permitted, hereby verifies that the information as submitted in the previously approved application to drill, remains valid and does not require revision.

Following is a checklist of some items related to the application, which should be verified.	**Yes**	**No**
If located on private land, has the ownership changed?		✓
If so, has the surface agreement been updated?		
Have any wells been drilled in the vicinity of the proposed well which would affect the spacing or siting requirements for this location?		✓
Have there been any unit or other agreements put in place that could affect the permitting or operation of this proposed well?		✓
Have there been any changes to the access route including ownership or right-of-way, which could affect the proposed location?		✓
Has the approved source of water for drilling changed?		✓
Have there been any physical changes to the surface location or access route which will require a change in plans from what was discussed at the onsite evaluation?		✓
Is bonding still in place, which covers this proposed well? Bond No. LPM9149893	✓	

Any desired or necessary changes to either a pending or approved Application for Permit to Drill that is being transferred, should be filed on a Sundry Notice, Form 9, or amended Application for Permit to Drill, Form 3, as appropriate, with necessary supporting information as required.

Name (please print) Beverly Decker Title Sr Engineering Technician

Signature Beverly Decker Date

Representing (company name) Berry Petroleum Company LLC and Linn Operating, Inc

The person signing this form must have legal authority to represent the company or individual(s) to be listed as the new operator on the Application for Permit to Drill.

(3/2004)

STATE OF UTAH
DEPARTMENT OF NATURAL RESOURCES
DIVISION OF OIL, GAS AND MINING

Request to Transfer Application or Permit to Drill

(This form should accompany a Sundry Notice, Form 9, requesting APD transfer)

Well name:	See Attached
API number:	
Location:	Qtr-Qtr: Section: Township: Range:
Company that filed original application:	Berry Petroleum Company LLC
Date original permit was issued:	
Company that permit was issued to:	Linn Operating, Inc

Check one	Desired Action:
✓	**Transfer pending (unapproved) Application for Permit to Drill to new operator**
	The undersigned as owner with legal rights to drill on the property, hereby verifies that the information as submitted in the pending Application for Permit to Drill, remains valid and does not require revision. The new owner of the application accepts and agrees to the information and procedures as stated in the application.
	Transfer approved Application for Permit to Drill to new operator
	The undersigned as owner with legal rights to drill on the property as permitted, hereby verifies that the information as submitted in the previously approved application to drill, remains valid and does not require revision.

Following is a checklist of some items related to the application, which should be verified.	**Yes**	**No**
If located on private land, has the ownership changed?		✓
If so, has the surface agreement been updated?		
Have any wells been drilled in the vicinity of the proposed well which would affect the spacing or siting requirements for this location?		✓
Have there been any unit or other agreements put in place that could affect the permitting or operation of this proposed well?		✓
Have there been any changes to the access route including ownership or right-of-way, which could affect the proposed location?		✓
Has the approved source of water for drilling changed?		✓
Have there been any physical changes to the surface location or access route which will require a change in plans from what was discussed at the onsite evaluation?		✓
Is bonding still in place, which covers this proposed well? Bond No. LPM9149893	✓	

Any desired or necessary changes to either a pending or approved Application for Permit to Drill that is being transferred, should be filed on a Sundry Notice, Form 9, or amended Application for Permit to Drill, Form 3, as appropriate, with necessary supporting information as required.

Name (please print) Beverly Decker Title Sr Engineering Technician

Signature Beverly Decker Date

Representing (company name) Berry Petroleum Company LLC and Linn Operating, Inc

The person signing this form must have legal authority to represent the company or individual(s) to be listed as the new operator on the Application for Permit to Drill.

(3/2004)

Berry Petroleum Company, LLC N4075) to Linn Operating, Inc. (N4115)
Effective June 1, 2014

Well Name	Section	TWN	RNG	API Number	Entity	Mineral Lease	Well Type	Well Status	Unit
Z and T UTE TRIBAL 2-21	21	050S	040W	4301331280	11130	Indian	WI	A	BRUNDAGE CANYON
UTE TRIBAL 12-30-54	30	050S	040W	4301332747	14747	Indian	WI	A	BRUNDAGE CANYON
UTE TRIBAL 14-30-54	30	050S	040W	4301332748	14778	Indian	WI	A	BRUNDAGE CANYON
UTE TRIBAL 10-30D-54	30	050S	040W	4301332893	15246	Indian	WI	A	BRUNDAGE CANYON
UTE TRIBAL 6-30-54	30	050S	040W	4301332975	15300	Indian	WI	A	BRUNDAGE CANYON
UTE TRIBAL 1-21-54	21	050S	040W	4301333388	15937	Indian	WI	A	BRUNDAGE CANYON
UTE TRIBAL 13-17D-55	17	050S	050W	4301333550		Indian	OW	APD	
UTE TRIBAL 11-14D-54	14	050S	040W	4301333596		Indian	OW	APD	
UTE TRIBAL 16-17D-55	17	050S	050W	4301333622		Indian	OW	APD	
UTE TRIBAL 15-28D-55	28	050S	050W	4301333623		Indian	OW	APD	
LC TRIBAL 14-16D-56	16	050S	060W	4301334283		Indian	OW	APD	
FEDERAL 10-10D-65	10	060S	050W	4301350523		Federal	OW	APD	
LC TRIBAL 3-23D-56	23	050S	060W	4301350624		Indian	OW	APD	
FEDERAL 2-1D-64	1	060S	040W	4301350765		Federal	OW	APD	
FEDERAL 7-1D-64	1	060S	040W	4301350766		Federal	OW	APD	
FEDERAL 9-1D-64	1	060S	040W	4301350767		Federal	OW	APD	
LC TRIBAL 1-28D-56	28	050S	060W	4301350865		Indian	OW	APD	
LC TRIBAL 13H-9-56	10	050S	060W	4301350874		Indian	OW	APD	
CC FEE 8-24-38	24	030S	080W	4301350885		Fee	OW	APD	
LC TRIBAL 4H-26-56	26	050S	060W	4301350951		Indian	OW	APD	
LC FEE 4H-12-57	12	050S	070W	4301350952		Fee	OW	APD	
CC TRIBAL 4-2-48	2	040S	080W	4301350964		Indian	OW	APD	
LC TRIBAL 5H-34-45	34	040S	050W	4301350974		Indian	OW	APD	
LC TRIBAL 11-34-45	34	040S	050W	4301350975		Indian	OW	APD	
LC TRIBAL 7-2D-56	2	050S	060W	4301350988		Indian	OW	APD	
LC TRIBAL 10-18D-56	18	050S	060W	4301350989		Indian	OW	APD	
CC TRIBAL 4-30D-38	19	030S	080W	4301350993		Indian	OW	APD	
FEDERAL 4-1-65	1	060S	050W	4301351016		Federal	OW	APD	
LC TRIBAL 3-16D-56	16	050S	060W	4301351032		Indian	OW	APD	
CC FEE 6-21-38	21	030S	080W	4301351059		Fee	OW	APD	
LC TRIBAL 13H-28-45	28	040S	050W	4301351061		Indian	OW	APD	
LC TRIBAL 5H-23-45	23	040S	050W	4301351071		Indian	OW	APD	
LC TRIBAL 4H-27-45	27	040S	050W	4301351072		Indian	OW	APD	
LC TRIBAL 16-27-45	27	040S	050W	4301351074		Indian	OW	APD	
LC TRIBAL 12-27-45	27	040S	050W	4301351075		Indian	OW	APD	
LC TRIBAL 16-23-45	23	040S	050W	4301351077		Indian	OW	APD	
LC TRIBAL 12H-30-56	30	050S	060W	4301351133		Indian	OW	APD	
LC TRIBAL 5-29D-56	29	050S	060W	4301351184		Indian	OW	APD	
LC TRIBAL 12H-19-56	19	050S	060W	4301351193		Indian	OW	APD	
LC FEE 15-11D-56	11	050S	060W	4301351197		Fee	OW	APD	
LC TRIBAL 13H-10-56	11	050S	060W	4301351209		Indian	OW	APD	
LC TRIBAL 2-31D-45	31	040S	050W	4301351261		Indian	OW	APD	
LC TRIBAL 13H-24-45	24	040S	050W	4301351273		Indian	OW	APD	
UTE TRIBAL 6-21D-55	21	050S	050W	4301351274		Indian	OW	APD	
UTE TRIBAL 15-16D-55	16	050S	050W	4301351284		Indian	OW	APD	
UTE TRIBAL 4H-15-55	15	050S	050W	4301351292		Indian	OW	APD	
UTE TRIBAL 13H-14-54	14	050S	040W	4301351297		Indian	OW	APD	
UTE TRIBAL 1-32-55	32	050S	050W	4301351298		Indian	OW	APD	
UTE TRIBAL 4-21D-55	21	050S	050W	4301351299		Indian	OW	APD	
LC TRIBAL 12-33-45	33	040S	050W	4301351301		Indian	OW	APD	
UTE TRIBAL 16-15D-55	15	050S	050W	4301351302		Indian	OW	APD	
UTE TRIBAL 2-24-55	24	050S	050W	4301351304		Indian	OW	APD	
LC TRIBAL 11-32D-56	32	050S	060W	4301351315		Indian	OW	APD	
LC TRIBAL 1-32D-56	32	050S	060W	4301351317		Indian	OW	APD	
LC TRIBAL 5H-32-56	32	050S	060W	4301351318		Indian	OW	APD	
LC TRIBAL 5H-33-45	33	040S	050W	4301351338		Indian	OW	APD	
LC TRIBAL 14-28-45	28	040S	050W	4301351339		Indian	OW	APD	
LC TRIBAL 16-32D-45	32	040S	050W	4301351340		Indian	OW	APD	
LC TRIBAL 3-31-45	31	040S	050W	4301351347		Indian	OW	APD	
LC TRIBAL 1-18D-56	18	050S	060W	4301351367		Indian	OW	APD	
LC TRIBAL 9-18D-56	18	050S	060W	4301351368		Indian	OW	APD	
LC FEE 9-23D-56	23	050S	060W	4301351380		Fee	OW	APD	
LC TRIBAL 1-34D-45	34	040S	050W	4301351382		Indian	OW	APD	
LC TRIBAL 12-21D-56	21	050S	060W	4301351383		Indian	OW	APD	
LC TRIBAL 7-29D-56	29	050S	060W	4301351386		Indian	OW	APD	

UTE TRIBAL 6-15-55	15	050S	050W	4301351399		Indian	OW	APD	
UTE TRIBAL 13H-21-55	21	050S	050W	4301351403		Indian	OW	APD	
LC TRIBAL 6-16D-56	16	050S	060W	4301351406		Indian	OW	APD	
LC TRIBAL 3-14D-56	14	050S	060W	4301351408		Indian	OW	APD	
CC FEE 13-9D-37	9	030S	070W	4301351409		Fee	OW	APD	
CC FEE 16-21D-38	21	030S	080W	4301351410		Fee	OW	APD	
UTE TRIBAL 5H-10-54	10	050S	040W	4301351415		Indian	OW	APD	
LC TRIBAL 13-6D-57	6	050S	070W	4301351417		Indian	OW	APD	
LC TRIBAL 9-23-45	23	040S	050W	4301351432		Indian	OW	APD	
LC TRIBAL 5-28D-56	29	050S	060W	4301351441		Indian	OW	APD	
LC TRIBAL 15-20D-56	29	050S	060W	4301351443		Indian	OW	APD	
LC FEE 14-1-56	1	050S	060W	4301351457		Fee	OW	APD	
LC TRIBAL 5-3D-56	3	050S	060W	4301351459		Indian	OW	APD	
LC Tribal 16-33-45	33	040S	050W	4301351463		Indian	OW	APD	
LC TRIBAL 7-23D-56	23	050S	060W	4301351479		Indian	OW	APD	
LC TRIBAL 4-7-56	7	050S	060W	4301351482		Indian	OW	APD	
LC TRIBAL 3-2-56	2	050S	060W	4301351483		Indian	OW	APD	
LC TRIBAL 12H-23-56	23	050S	060W	4301351488		Indian	OW	APD	
CC TRIBAL 15-34D-38	2	040S	080W	4301351490		Indian	OW	APD	
CC TRIBAL 14-35D-38	2	040S	080W	4301351491		Indian	OW	APD	
CC TRIBAL 8-3D-48	2	040S	080W	4301351493		Indian	OW	APD	
LC TRIBAL 12HH-31-45	32	040S	050W	4301351499		Indian	OW	APD	
LC TRIBAL 1-10D-56	10	050S	060W	4301351510		Indian	OW	APD	
LC TRIBAL 3-10D-56	10	050S	060W	4301351511		Indian	OW	APD	
LC TRIBAL 7-10D-56	10	050S	060W	4301351512		Indian	OW	APD	
LC TRIBAL 9-29D-56	29	050S	060W	4301351513		Indian	OW	APD	
UTE TRIBAL 1-16-55	16	050S	050W	4301351519		Indian	OW	APD	
CC Tribal 3-27D-38	27	030S	080W	4301351604		Indian	OW	APD	
LC FEE 10-36D-56	36	050S	060W	4301351622		Fee	OW	APD	
Myrin Fee 3-16D-55	16	050S	050W	4301351633		Fee	OW	APD	
LC TRIBAL 12H-34-56	34	050S	060W	4301351634		Indian	OW	APD	
UTE FEE 12-16D-55	16	050S	050W	4301351635		Fee	OW	APD	
LC TRIBAL 15-27-56	27	050S	060W	4301351649		Indian	OW	APD	
LC TRIBAL 11-27D-56	27	050S	060W	4301351650		Indian	OW	APD	
LC TRIBAL 1-17-56	17	050S	060W	4301351704		Indian	OW	APD	
LC Tribal 13-11D-58	11	050S	080W	4301351708		Indian	OW	APD	
LC Tribal 15-11D-58	11	050S	080W	4301351709		Indian	OW	APD	
LC Tribal 4HW-8-56	8	050S	060W	4301351710		Indian	OW	APD	
LC FEE 1-11D-56	11	050S	060W	4301351712		Fee	OW	APD	
LC TRIBAL 3-11D-56	11	050S	060W	4301351713		Indian	OW	APD	
LC TRIBAL 7-11D-56	11	050S	060W	4301351714		Indian	OW	APD	
LC TRIBAL 9-34D-45	34	040S	050W	4301351717		Indian	OW	APD	
LC Tribal 8M-23-45	23	040S	050W	4301351722		Indian	OW	APD	
LC TRIBAL 4-34D-45	34	040S	050W	4301351723		Indian	OW	APD	
LC TRIBAL 7-34D-45	34	040S	050W	4301351724		Indian	OW	APD	
LC Tribal 3-14D-58	11	050S	080W	4301351726		Indian	OW	APD	
LC Tribal 11-11D-58	11	050S	080W	4301351729		Indian	OW	APD	
LC TRIBAL 8-31D-56	31	050S	060W	4301351746		Indian	OW	APD	
LC TRIBAL 13-34D-45	34	040S	050W	4301351747		Indian	OW	APD	
LC Fee 2-6D-57	6	050S	070W	4301351749		Fee	OW	APD	
LC Tribal 15-12D-58	12	050S	080W	4301351783		Indian	OW	APD	
LC Tribal 9-12D-58	12	050S	080W	4301351784		Indian	OW	APD	
LC Tribal 1-13D-58	12	050S	080W	4301351785		Indian	OW	APD	
LC Tribal 13-7D-57	12	050S	080W	4301351786		Indian	OW	APD	
LC Tribal 9-2D-58	2	050S	080W	4301351788		Indian	OW	APD	
LC Tribal 1-2D-58	2	050S	080W	4301351789		Indian	OW	APD	
LC Tribal 5-1D-58	2	050S	080W	4301351790		Indian	OW	APD	
LC TRIBAL 12-31D-56	31	050S	060W	4301351799		Indian	OW	APD	
LC TRIBAL 8-20D-56	20	050S	060W	4301351800		Indian	OW	APD	
LC TRIBAL 6-31D-56	31	050S	060W	4301351801		Indian	OW	APD	
LC Tribal 11-7D-57	7	050S	070W	4301351814		Indian	OW	APD	
LC Tribal 5-7D-57	7	050S	070W	4301351815		Indian	OW	APD	
LC Fee 15-6D-57	6	050S	070W	4301351816		Fee	OW	APD	
LC Tribal 11-6D-57	6	050S	070W	4301351817		Indian	OW	APD	
LC TRIBAL 9-27-56	27	050S	060W	4301351822		Indian	OW	APD	
LC TRIBAL 7-27D-56	27	050S	060W	4301351823		Indian	OW	APD	

LC Fee 7-31D-45	31	040S	050W	4301351857		Fee	OW	APD	
LC Tribal 5-31D-45	31	040S	050W	4301351858		Indian	OW	APD	
LC Tribal 8-33-45	33	040S	050W	4301351859		Indian	OW	APD	
LC Tribal 16-31-45	31	040S	050W	4301351863		Indian	OW	APD	
LC Tribal 7-23D-45	23	040S	050W	4301351865		Indian	OW	APD	
LC Tribal 1-23D-56	23	050S	060W	4301351866		Indian	OW	APD	
LC TRIBAL 1-19-56	19	050S	060W	4301351867		Indian	OW	APD	
LC TRIBAL 7-19D-56	19	050S	060W	4301351868		Indian	OW	APD	
LC TRIBAL 9-4D-56	4	050S	060W	4301351869		Indian	OW	APD	
LC Tribal 14-32D-45	32	040S	050W	4301351879		Indian	OW	APD	
LC TRIBAL 7-17D-56	17	050S	060W	4301351886		Indian	OW	APD	
LC TRIBAL 5-17D-56	17	050S	060W	4301351887		Indian	OW	APD	
LC FEE 4-32D-45	31	040S	050W	4301351892		Fee	OW	APD	
LC TRIBAL 9-2D-56	2	050S	060W	4301351893		Indian	OW	APD	
LC TRIBAL 1-2D-56	2	050S	060W	4301351894		Indian	OW	APD	
LC Tribal 15-23D-45	23	040S	050W	4301351895		Indian	OW	APD	
LC TRIBAL 11-34D-56	34	050S	060W	4301351900		Indian	OW	APD	
LC TRIBAL 9-5D-56	4	050S	060W	4301351901		Indian	OW	APD	
LC Tribal 10-28D-45	28	040S	050W	4301351903		Indian	OW	APD	
LC TRIBAL 13-20D-56	20	050S	060W	4301351904		Indian	OW	APD	
Ute Tribal 14-17-55	17	050S	050W	4301351908		Indian	OW	APD	
LC Tribal 3-27D-45	27	040S	050W	4301351911		Indian	OW	APD	
LC TRIBAL 9-34D-56	34	050S	060W	4301351914		Indian	OW	APD	
CC Fee 8R-9-37	9	030S	070W	4301351937		Fee	OW	APD	
LC Tribal 10-33D-45	33	040S	050W	4301351939		Indian	OW	APD	
LC Tribal 14-33D-45	33	040S	050W	4301351940		Indian	OW	APD	
LC Tribal 10-27D-45	27	040S	050W	4301351941		Indian	OW	APD	
LC Tribal 14-27D-45	27	040S	050W	4301351951		Indian	OW	APD	
LC Tribal 6-33D-45	33	040S	050W	4301351955		Indian	OW	APD	
LC Tribal 6-32D-45	32	040S	050W	4301351956		Indian	OW	APD	
Federal 3-11D-65	11	060S	050W	4301351982		Federal	OW	APD	
Federal 2-4-64	4	060S	040W	4301351983		Federal	OW	APD	
Federal 5-11D-65	11	060S	050W	4301351984		Federal	OW	APD	
Federal 7-4D-64	4	060S	040W	4301351985		Federal	OW	APD	
Federal 3-4D-64	4	060S	040W	4301351986		Federal	OW	APD	
Federal 8-4D-64	4	060S	040W	4301351988		Federal	OW	APD	
Federal 6-4D-64	4	060S	040W	4301351989		Federal	OW	APD	
Federal 7-9D-64	9	060S	040W	4301351990		Federal	OW	APD	
Federal 4-4D-64	4	060S	040W	4301351991		Federal	OW	APD	
Federal 9-4D-64	4	060S	040W	4301352004		Federal	OW	APD	
Federal 10-4D-64	4	060S	040W	4301352011		Federal	OW	APD	
Federal 3-9D-64	9	060S	040W	4301352015		Federal	OW	APD	
Federal 1-9D-64	9	060S	040W	4301352020		Federal	OW	APD	
Federal 6-9-64	9	060S	040W	4301352021		Federal	OW	APD	
Federal 8-9D-64	9	060S	040W	4301352023		Federal	OW	APD	
Federal 1-4D-64	4	060S	040W	4301352025		Federal	OW	APD	
Federal 16-4D-64	4	060S	040W	4301352026		Federal	OW	APD	
LC Tribal 10-23D-45	23	040S	050W	4301352029		Indian	OW	APD	
Federal 15-4D-64	4	060S	040W	4301352032		Federal	OW	APD	
Federal 5-9D-64	9	060S	040W	4301352035		Federal	OW	APD	
Federal 9-9D-64	9	060S	040W	4301352036		Federal	OW	APD	
Federal 11-9D-64	9	060S	040W	4301352037		Federal	OW	APD	
Federal 12-9D-64	9	060S	040W	4301352038		Federal	OW	APD	
Federal 13-9D-64	9	060S	040W	4301352039		Federal	OW	APD	
FEDERAL 14-9D-64	9	060S	040W	4301352040		Federal	OW	APD	
Federal 10-9D-64	9	060S	040W	4301352041		Federal	OW	APD	
Federal 2-9D-64	9	060S	040W	4301352042		Federal	OW	APD	
Federal 15-9D-64	9	060S	040W	4301352043		Federal	OW	APD	
Federal 16-9D-64	9	060S	040W	4301352044		Federal	OW	APD	
LC Tribal 10-32D-45	32	040S	050W	4301352065		Indian	OW	APD	
LC Tribal 16-28D-45	28	040S	050W	4301352073		Indian	OW	APD	
LC Tribal 15-24D-45	24	040S	050W	4301352074		Indian	OW	APD	
LC Tribal 13-17D-56	17	050S	060W	4301352076		Indian	OW	APD	
LC Tribal 15-17D-56	17	050S	060W	4301352077		Indian	OW	APD	
LC Tribal 5-26D-56	26	050S	060W	4301352097		Indian	OW	APD	
LC Tribal 11-26D-56	26	050S	060W	4301352098		Indian	OW	APD	

LC Tribal 13-26D-56	26	050S	060W	4301352099		Indian	OW	APD	
LC Tribal 2-27D-45	27	040S	050W	4301352100		Indian	OW	APD	
LC Tribal 8-27D-45	27	040S	050W	4301352101		Indian	OW	APD	
LC Tribal 4-9D-56	9	050S	060W	4301352102		Indian	OW	APD	
LC Tribal 8-32D-45	32	040S	050W	4301352135		Indian	OW	APD	
UTE Tribal 15-24D-54	24	050S	040W	4301352156		Indian	GW	APD	
UTE Tribal 9-24D-54	24	050S	040W	4301352157		Indian	GW	APD	
UTE Tribal 1-25D-54	25	050S	040W	4301352173		Indian	GW	APD	
UTE Tribal 9-25D-54	25	050S	040W	4301352177		Indian	GW	APD	
Myrin Tribal 9-10D-55	10	050S	050W	4301352189		Indian	OW	APD	
Myrin Tribal 16-10D-55	10	050S	050W	4301352190		Indian	OW	APD	
Myrin Tribal 10-10D-55	10	050S	050W	4301352191		Indian	OW	APD	
UTE Tribal 1-24D-54	24	050S	040W	4301352304		Indian	GW	APD	
UTE Tribal 7-24D-54	24	050S	040W	4301352306		Indian	GW	APD	
UTE Tribal 12-25D-54	25	050S	040W	4301352308		Indian	GW	APD	
UTE Tribal 4-13D-54	13	050S	040W	4301352321		Indian	GW	APD	
UTE Tribal 13-25D-54	25	050S	040W	4301352322		Indian	GW	APD	
Abbott Fee 1-6D-54	6	050S	040W	4301352324		Fee	OW	APD	
Abbott Fee 7-6D-54	6	050S	040W	4301352327		Fee	OW	APD	
UTE Tribal 3-24D-54	24	050S	040W	4301352347		Indian	GW	APD	
UTE Tribal 5-24D-54	24	050S	040W	4301352348		Indian	GW	APD	
State Tribal 7-12D-55	12	050S	050W	4301352369		Indian	OW	APD	
State Tribal 14-1D-55	1	050S	050W	4301352372		Indian	OW	APD	
State Tribal 11-1D-55	1	050S	050W	4301352373		Indian	OW	APD	
State Tribal 13-1D-55	1	050S	050W	4301352374		Indian	OW	APD	
State Tribal 12-2D-55	2	050S	050W	4301352391		Indian	OW	APD	
State Tribal 14-2D-55	2	050S	050W	4301352392		Indian	OW	APD	
State Tribal 13-2D-55	2	050S	050W	4301352393		Indian	OW	APD	
State Tribal 14-3D-55	3	050S	050W	4301352430		Indian	OW	APD	
State Tribal 11-3D-55	3	050S	050W	4301352434		Indian	OW	APD	
State Tribal 13-3D-55	3	050S	050W	4301352435		Indian	OW	APD	
UTE TRIBAL 2-5D-55	5	050S	050W	4301352450		Indian	OW	APD	
Ute Tribal 1-5D-55	5	050S	050W	4301352456		Indian	OW	APD	BRUNDAGE CANYON
Ute Tribal 7-5-55	5	050S	050W	4301352459		Indian	OW	APD	
Ute Tribal 3-16D-54	9	050S	040W	4301352467		Indian	OW	APD	
State Tribal 1-3D-55	3	050S	050W	4301352471		Indian	OW	APD	
State Tribal 2-3D-55	3	050S	050W	4301352472		Indian	OW	APD	
State Tribal 7-3D-55	3	050S	050W	4301352473		Indian	OW	APD	
State Tribal 8-3D-55	3	050S	050W	4301352474		Indian	OW	APD	
UTE FEE 10-9D-54	9	050S	040W	4301352475		Fee	OW	APD	
UTE FEE 12-9D-54	9	050S	040W	4301352476		Fee	OW	APD	
UTE FEE 16-9D-54	9	050S	040W	4301352478		Fee	OW	APD	
Ute Tribal 2-16D-54	9	050S	040W	4301352481		Indian	OW	APD	
Federal 14-6D-65	6	060S	050W	4301352495		Federal	OW	APD	
Federal 13-6D-65	6	060S	050W	4301352496		Federal	OW	APD	
Federal 11-6D-65	6	060S	050W	4301352497		Federal	OW	APD	
Federal 10-6D-65	6	060S	050W	4301352498		Federal	OW	APD	
State Tribal 3-3D-55	3	050S	050W	4301352532		Indian	OW	APD	
State Tribal 4-3D-55	3	050S	050W	4301352533		Indian	OW	APD	
State Tribal 5-3D-55	3	050S	050W	4301352535		Indian	OW	APD	
State Tribal 6-3D-55	3	050S	050W	4301352536		Indian	OW	APD	
Federal 2-7D-65	7	060S	050W	4301352537		Federal	OW	APD	
Federal 5-7D-65	7	060S	050W	4301352538		Federal	OW	APD	
Federal 4-7D-65	7	060S	050W	4301352541		Federal	OW	APD	
UTE FEE 11-9D-54	9	050S	040W	4301352544		Fee	OW	APD	
UTE TRIBAL 15-12D-55	12	050S	050W	4301352549		Indian	OW	APD	
UTE TRIBAL 6-5D-55	5	050S	050W	4301352556		Indian	OW	APD	
UTE TRIBAL 5-5D-55	5	050S	050W	4301352557		Indian	OW	APD	
UTE TRIBAL 4-5D-55	5	050S	050W	4301352558		Indian	OW	APD	
UTE TRIBAL 3-5D-55	5	050S	050W	4301352559		Indian	OW	APD	
Federal 3-7-65	7	060S	050W	4301352560		Federal	OW	APD	
Ute Tribal 9-11D-55	11	050S	050W	4301352564		Indian	OW	APD	
UTE TRIBAL 10-11D-55	11	050S	050W	4301352566		Indian	OW	APD	
UTE TRIBAL 15-11D-55	11	050S	050W	4301352567		Indian	OW	APD	
Federal 1-7D-65	6	060S	050W	4301352589		Federal	OW	APD	
Federal 16-6D-65	6	060S	050W	4301352590		Federal	OW	APD	

Federal 15-6D-65	6	060S	050W	4301352591		Federal	OW	APD	
UTE TRIBAL 14-12D-55	12	050S	050W	4301352592		Indian	OW	APD	
UTE TRIBAL 13-12D-55	12	050S	050W	4301352593		Indian	OW	APD	
UTE TRIBAL 10-11D-54	11	050S	040W	4301352603		Indian	OW	APD	
UTE TRIBAL 9-11D-54	11	050S	040W	4301352604		Indian	OW	APD	
UTE TRIBAL 15-11-54	11	050S	040W	4301352605		Indian	OW	APD	
UTE TRIBAL 16-11D-54	11	050S	040W	4301352606		Indian	OW	APD	
UTE TRIBAL 14-11D-55	11	050S	050W	4301352610		Indian	OW	APD	
UTE TRIBAL 13-11D-55	11	050S	050W	4301352611		Indian	OW	APD	
UTE TRIBAL 12-11D-55	11	050S	050W	4301352612		Indian	OW	APD	
UTE TRIBAL 11-11D-55	11	050S	050W	4301352613		Indian	OW	APD	
Federal 6-7D-65	7	060S	050W	4301352682		Federal	OW	APD	
Federal 11-7D-65	7	060S	050W	4301352683		Federal	OW	APD	
Federal 10-7D-65	7	060S	050W	4301352684		Federal	OW	APD	
Federal 7-7D-65	7	060S	050W	4301352685		Federal	OW	APD	
UTE TRIBAL 14-30D-55	30	050S	050W	4301352687		Indian	OW	APD	
UTE TRIBAL 13-30D-55	30	050S	050W	4301352688		Indian	OW	APD	
UTE TRIBAL 12-30D-55	30	050S	050W	4301352689		Indian	OW	APD	
UTE TRIBAL 11-30D-55	30	050S	050W	4301352690		Indian	OW	APD	
UTE TRIBAL 7-17D-55	17	050S	050W	4301352691		Indian	OW	APD	
UTE TRIBAL 6-17D-55	17	050S	050W	4301352692		Indian	OW	APD	
UTE TRIBAL 3-17D-55	17	050S	050W	4301352693		Indian	OW	APD	
UTE TRIBAL 2-17D-55	17	050S	050W	4301352694		Indian	OW	APD	
UTE TRIBAL 4-17D-55	17	050S	050W	4301352695		Indian	OW	APD	
State Tribal 3-12D-55	12	050S	050W	4301352697		Indian	OW	APD	
State Tribal 4-12D-55	12	050S	050W	4301352698		Indian	OW	APD	
UTE TRIBAL 12-31D-55	31	050S	050W	4301352699		Indian	OW	APD	
UTE TRIBAL 13-31D-55	31	050S	050W	4301352700		Indian	OW	APD	
UTE TRIBAL 14-31D-55	31	050S	050W	4301352701		Indian	OW	APD	
UTE TRIBAL 14-13D-54	13	050S	040W	4301352702		Indian	OW	APD	
UTE TRIBAL 11-31-55	31	050S	050W	4301352703		Indian	OW	APD	
State Tribal 3-11D-55	11	050S	050W	4301352704		Indian	OW	APD	
State Tribal 4-11D-55	11	050S	050W	4301352705		Indian	OW	APD	
State Tribal 5-11D-55	11	050S	050W	4301352706		Indian	OW	APD	
State Tribal 6-11D-55	11	050S	050W	4301352707		Indian	OW	APD	
State Tribal 8-11D-55	11	050S	050W	4301352708		Indian	OW	APD	
State Tribal 7-11D-55	11	050S	050W	4301352709		Indian	OW	APD	
State Tribal 2-11D-55	11	050S	050W	4301352710		Indian	OW	APD	
State Tribal 1-11D-55	11	050S	050W	4301352711		Indian	OW	APD	
UTE TRIBAL 9-4D-55	4	050S	050W	4301352713		Indian	OW	APD	
State Tribal 2-10D-55	10	050S	050W	4301352714		Indian	OW	APD	
State Tribal 7-10D-55	10	050S	050W	4301352715		Indian	OW	APD	
State Tribal 8-10D-55	10	050S	050W	4301352716		Indian	OW	APD	
UTE TRIBAL 10-4D-55	4	050S	050W	4301352717		Indian	OW	APD	
UTE TRIBAL 15-4D-55	4	050S	050W	4301352718		Indian	OW	APD	
State Tribal 1-10D-55	10	050S	050W	4301352720		Indian	OW	APD	
UTE TRIBAL 16-4D-55	4	050S	050W	4301352721		Indian	OW	APD	
State Tribal 3-10D-55	10	050S	050W	4301352723		Indian	OW	APD	
State Tribal 4-10D-55	10	050S	050W	4301352724		Indian	OW	APD	
State Tribal 5-10D-55	10	050S	050W	4301352725		Indian	OW	APD	
State Tribal 6-10D-55	10	050S	050W	4301352726		Indian	OW	APD	
UTE TRIBAL 11-5D-55	5	050S	050W	4301352727		Indian	OW	APD	
UTE TRIBAL 12-5D-55	5	050S	050W	4301352728		Indian	OW	APD	
UTE TRIBAL 13-5D-55	5	050S	050W	4301352729		Indian	OW	APD	
UTE TRIBAL 14-5D-55	5	050S	050W	4301352730		Indian	OW	APD	
UTE TRIBAL 9-30D-55	30	050S	050W	4301352731		Indian	OW	APD	
State Tribal 15-2D-55	2	050S	050W	4301352732		Indian	OW	APD	
State Tribal 16-2D-55	2	050S	050W	4301352733		Indian	OW	APD	
State Tribal 10-2D-55	2	050S	050W	4301352734		Indian	OW	APD	
State Tribal 9-2D-55	2	050S	050W	4301352735		Indian	OW	APD	
UTE TRIBAL 10-30D-55	30	050S	050W	4301352736		Indian	OW	APD	
UTE TRIBAL 15-30D-55	30	050S	050W	4301352737		Indian	OW	APD	
UTE TRIBAL 16-30D-55	30	050S	050W	4301352738		Indian	OW	APD	
Myrin Tribal 9-19D-55	19	050S	050W	4301352739		Indian	OW	APD	
State Tribal 16-3D-55	3	050S	050W	4301352740		Indian	OW	APD	
State Tribal 15-3D-55	3	050S	050W	4301352741		Indian	OW	APD	

State Tribal 10-3D-55	3	050S	050W	4301352742		Indian	OW	APD
State Tribal 9-3D-55	3	050S	050W	4301352743		Indian	OW	APD
Myrin Tribal 15-19D-55	19	050S	050W	4301352744		Indian	OW	APD
Myrin Tribal 13-19D-55	19	050S	050W	4301352745		Indian	OW	APD
Myrin Tribal 12-19D-55	19	050S	050W	4301352746		Indian	OW	APD
UTE TRIBAL 5-4D-55	4	050S	050W	4301352747		Indian	OW	APD
UTE TRIBAL 4-4D-55	4	050S	050W	4301352748		Indian	OW	APD
UTE TRIBAL 3-4D-55	4	050S	050W	4301352749		Indian	OW	APD
UTE TRIBAL 6-4D-55	4	050S	050W	4301352754		Indian	OW	APD
UTE TRIBAL 3-31D-55	31	050S	050W	4301352757		Indian	OW	APD
UTE TRIBAL 5-31D-55	31	050S	050W	4301352758		Indian	OW	APD
UTE TRIBAL 6-31D-55	31	050S	050W	4301352759		Indian	OW	APD
UTE TRIBAL 7-31D-55	31	050S	050W	4301352764		Indian	OW	APD
Myrin Tribal 11-19D-55	19	050S	050W	4301352765		Indian	OW	APD
Federal 8-14D-65	14	060S	050W	4301352767		Federal	OW	APD
Federal 7-14D-65	14	060S	050W	4301352768		Federal	OW	APD
Federal 2-14D-65	14	060S	050W	4301352769		Federal	OW	APD
Federal 1-14D-65	14	060S	050W	4301352770		Federal	OW	APD
UTE TRIBAL 8-5D-55	5	050S	050W	4301352773		Indian	OW	APD
UTE TRIBAL 4-31D-55	31	050S	050W	4301352795		Indian	OW	APD
UTE TRIBAL 4-30D-55	30	050S	050W	4301352796		Indian	OW	APD
UTE TRIBAL 5-30D-55	30	050S	050W	4301352797		Indian	OW	APD
UTE TRIBAL 7-30D-55	30	050S	050W	4301352799		Indian	OW	APD
Federal 1-13D-65	13	060S	050W	4301352800		Federal	OW	APD
Federal 7-13D-65	13	060S	050W	4301352802		Federal	OW	APD
UTE TRIBAL 1-30D-55	30	050S	050W	4301352809		Indian	OW	APD
LC TRIBAL 6-25D-56	25	050S	060W	4301352810		Indian	OW	APD
LC TRIBAL 4-25D-56	25	050S	060W	4301352812		Indian	OW	APD
Federal 6-13D-65	13	060S	050W	4301352813		Federal	OW	APD
Federal 4-13D-65	13	060S	050W	4301352814		Federal	OW	APD
Federal 3-13D-65	13	060S	050W	4301352815		Federal	OW	APD
Federal 3-16D-64	16	060S	040W	4301352823		Federal	OW	APD
Federal 4-16D-64	16	060S	040W	4301352824		Federal	OW	APD
Federal 5-16D-64	16	060S	040W	4301352825		Federal	OW	APD
Federal 6-16D-64	16	060S	040W	4301352826		Federal	OW	APD
Federal 5-13D-65	13	060S	050W	4301352827		Federal	OW	APD
LC TRIBAL 1-25D-56	25	050S	060W	4301352835		Indian	OW	APD
LC TRIBAL 2-25D-56	25	050S	060W	4301352836		Indian	OW	APD
LC TRIBAL 8-25D-56	25	050S	060W	4301352837		Indian	OW	APD
UTE FEE 1-13D-55	13	050S	050W	4301352838		Fee	OW	APD
LC TRIBAL 9-25D-56	25	050S	060W	4301352840		Indian	OW	APD
LC TRIBAL 15-25-56	25	050S	060W	4301352844		Indian	OW	APD
Federal 9-5D-65	5	060S	050W	4301352846		Federal	OW	APD
Federal 10-5D-65	5	060S	050W	4301352847		Federal	OW	APD
LC TRIBAL 16-25D-56	25	050S	060W	4301352848		Indian	OW	APD
LC TRIBAL 10-25D-56	25	050S	060W	4301352849		Indian	OW	APD
UTE TRIBAL 8-30D-55	29	050S	050W	4301352855		Indian	OW	APD
UTE TRIBAL 9-29D-55	29	050S	050W	4301352870		Indian	OW	APD
UTE TRIBAL 6-24D-55	24	050S	050W	4301352871		Indian	OW	APD
UTE TRIBAL 16-17D-55	17	050S	050W	4301352872		Indian	OW	APD
UTE TRIBAL 13-27D-55	27	050S	050W	4301352882		Indian	OW	APD
UTE TRIBAL 4-29D-55	29	050S	050W	4301352883		Indian	OW	APD
UTE TRIBAL 1-29D-55	29	050S	050W	4301352884		Indian	OW	APD
Federal 4-2D-65	2	060S	050W	4301352885		Federal	OW	APD
Federal 5-2D-65	2	060S	050W	4301352886		Federal	OW	APD
Federal 12-2D-65	2	060S	050W	4301352887		Federal	OW	APD
LC TRIBAL 12-25D-56	25	050S	060W	4301352888		Indian	OW	APD
LC TRIBAL 13-25D-56	25	050S	060W	4301352890		Indian	OW	APD
LC TRIBAL 14-25D-56	25	050S	060W	4301352891		Indian	OW	APD
Federal 15-3D-65	3	060S	050W	4301352892		Federal	OW	APD
Federal 9-3D-65	3	060S	050W	4301352893		Federal	OW	APD
Federal 8-3D-65	3	060S	050W	4301352894		Federal	OW	APD
Federal 6-3D-65	3	060S	050W	4301352895		Federal	OW	APD
UTE TRIBAL 6-28D-55	28	050S	050W	4301334056	18593	Indian	OW	DRL
MOON TRIBAL 9-27D-54	27	050S	040W	4301334108	19095	Indian	OW	DRL
LC TRIBAL 9-16D-56	16	050S	060W	4301350600	99999	Indian	OW	DRL

FEDERAL 15-6D-64	6	060S	040W	4301351219	18793	Federal	OW	DRL	
UTE TRIBAL 9-21D-55	21	050S	050W	4301351258	19401	Indian	OW	DRL	
STATE TRIBAL 2-12D-55	12	050S	050W	4301351310	19444	Indian	OW	DRL	
UTE TRIBAL 7-10D-54	10	050S	040W	4301351365	19391	Indian	OW	DRL	
LC TRIBAL 9-26D-56	26	050S	060W	4301351381	19433	Indian	OW	DRL	
UTE TRIBAL 8-17D-55	17	050S	050W	4301351413	19388	Indian	OW	DRL	
LC TRIBAL 9-24D-45	24	040S	050W	4301351431	18861	Indian	OW	DRL	
LC TRIBAL 2-29D-45	29	040S	050W	4301351705	99999	Indian	OW	DRL	
LC TAYLOR FEE 14-22D-56	22	050S	060W	4301351744	19508	Fee	OW	DRL	
LC FEE 14-6D-56	6	050S	060W	4301351787	18910	Fee	OW	DRL	
LC FEE 15-6-56	6	050S	060W	4301351792	19334	Fee	OW	DRL	
LC Fee 14-36D-56	36	050S	060W	4301351878	19376	Fee	OW	DRL	
LC Fee 12-36-56	36	050S	060W	4301351883	19377	Fee	OW	DRL	
LC Tribal 6-29D-45	29	040S	050W	4301351902	19402	Indian	OW	DRL	
Federal 4-6D-65	6	060S	050W	4301352005	19173	Federal	OW	DRL	
Federal 12-6D-65	6	060S	050W	4301352006	19174	Federal	OW	DRL	
UTE Tribal 14-18D-54	18	050S	040W	4301352213	19509	Indian	GW	DRL	
UTE Tribal 15-31D-55	31	050S	050W	4301352309	19472	Indian	GW	DRL	
UTE Tribal 16-31D-55	31	050S	050W	4301352318	19473	Indian	GW	DRL	
State Tribal 1-12D-55	12	050S	050W	4301352390	19445	Indian	OW	DRL	
State Tribal 16-6D-54	6	050S	040W	4301352394	19424	Indian	OW	DRL	
State Tribal 10-6D-54	6	050S	040W	4301352395	19425	Indian	OW	DRL	
State Tribal 9-6D-54	6	050S	040W	4301352396	19426	Indian	OW	DRL	
State Tribal 7-7D-54	7	050S	040W	4301352426	19496	Indian	OW	DRL	
State Tribal 1-7D-54	7	050S	040W	4301352427	19497	Indian	OW	DRL	
State Tribal 2-7D-54	7	050S	040W	4301352428	19498	Indian	OW	DRL	
State Tribal 3-7D-54	7	050S	040W	4301352429	19517	Indian	OW	DRL	
State Tribal 4-7D-54	7	050S	040W	4301352431	99999	Indian	OW	DRL	
State Tribal 5-7D-54	7	050S	040W	4301352432	99999	Indian	OW	DRL	
State Tribal 6-7D-54	7	050S	040W	4301352433	19518	Indian	OW	DRL	
State Tribal 11-6D-54	6	050S	040W	4301352452	19474	Indian	OW	DRL	
State Tribal 12-6D-54	6	050S	040W	4301352453	19475	Indian	OW	DRL	
State Tribal 13-6D-54	6	050S	040W	4301352454	19476	Indian	OW	DRL	
State Tribal 14-6D-54	6	050S	040W	4301352455	19477	Indian	OW	DRL	
Ute Tribal 1-9D-54	9	050S	040W	4301352465	19356	Indian	OW	DRL	
Ute Tribal 7-9D-54	9	050S	040W	4301352466	19357	Indian	OW	DRL	
UTE TRIBAL 12-5D-54	5	050S	040W	4301352480	19499	Indian	OW	DRL	
UTE TRIBAL 13-5D-54	5	050S	040W	4301352484	19500	Indian	OW	DRL	
UTE TRIBAL 14-5D-54	5	050S	040W	4301352493	19510	Indian	OW	DRL	
State Tribal 13-11D-54	10	050S	040W	4301352561	19519	Indian	OW	DRL	
State Tribal 1-18D-54	18	050S	040W	4301352568	19434	Indian	OW	DRL	
State Tribal 2-18D-54	18	050S	040W	4301352576	19427	Indian	OW	DRL	
State Tribal 8-18D-54	18	050S	040W	4301352577	19428	Indian	OW	DRL	
State Tribal 4-18D-54	18	050S	040W	4301352607	19435	Indian	OW	DRL	
State Tribal 3-18D-54	18	050S	040W	4301352608	19436	Indian	OW	DRL	
State Tribal 6-18D-54	18	050S	040W	4301352609	19437	Indian	OW	DRL	
State Tribal 5-12-55	12	050S	050W	4301352643	19446	Indian	OW	DRL	
State Tribal 12-12D-55	12	050S	050W	4301352644	19447	Indian	OW	DRL	
State Tribal 6-12D-55	12	050S	050W	4301352645	19438	Indian	OW	DRL	
State Tribal 16-1D-55	1	050S	050W	4301352646	19483	Indian	OW	DRL	
State Tribal 15-1D-55	1	050S	050W	4301352647	19484	Indian	OW	DRL	
State Tribal 10-1D-55	1	050S	050W	4301352648	19485	Indian	OW	DRL	
State Tribal 9-1D-55	1	050S	050W	4301352649	19486	Indian	OW	DRL	
LC FEE 16-15D-56	14	050S	060W	4301352655	19520	Fee	OW	DRL	
LC Tribal 2-22D-56	22	050S	060W	4301352663	99999	Indian	OW	DRL	
LC Tribal 3-22D-56	22	050S	060W	4301352664	99999	Indian	OW	DRL	
Federal 2-13-65	13	060S	050W	4301352801	19501	Federal	OW	DRL	
Federal 8-13D-65	13	060S	050W	4301352803	19502	Federal	OW	DRL	
Federal 12-8D-64	7	060S	040W	4301352832	99999	Federal	OW	DRL	
Federal 5-8D-64	7	060S	040W	4301352833	99999	Federal	OW	DRL	
Federal 4-8D-64	7	060S	040W	4301352834	99999	Federal	OW	DRL	
Federal 3-8D-64	5	060S	040W	4301352845	19503	Federal	OW	DRL	
LC TRIBAL 4H-31-56	31	050S	060W	4301351738		Indian	OW	NEW	
Federal 14-7D-65	31	050S	060W	4301351910		Indian	OW	NEW	
LC Fee 11-22-57	22	050S	070W	4301352127		Fee	OW	NEW	
LC Fee 13-22D-57	22	050S	070W	4301352131		Fee	OW	NEW	

LC Tribal 5-22D-57	22	050S	070W	4301352133		Indian	OW	NEW
LC Tribal 15-22D-57	22	050S	070W	4301352134		Indian	OW	NEW
LC Tribal 11-18D-56	18	050S	060W	4301352140		Indian	OW	NEW
LC Tribal 13-18D-56	18	050S	060W	4301352141		Indian	OW	NEW
LC Tribal 15-18D-56	18	050S	060W	4301352142		Indian	OW	NEW
LC Tribal 7-18D-56	18	050S	060W	4301352153		Indian	OW	NEW
LC Tribal 5-18D-56	18	050S	060W	4301352154		Indian	OW	NEW
LC Tribal 3-18-56	18	050S	060W	4301352155		Indian	OW	NEW
LC Tribal 6-19D-56	19	050S	060W	4301352247		Indian	OW	NEW
LC Tribal 4-19D-56	19	050S	060W	4301352248		Indian	OW	NEW
Abbott Fee 3-6D-54	6	050S	040W	4301352325		Fee	OW	NEW
LC Fee 9-11D-56	11	050S	060W	4301352479		Fee	OW	NEW
Williams Tribal 8-4D-54	4	050S	040W	4301352650		Indian	OW	NEW
Williams Tribal 7-4D-54	4	050S	040W	4301352651		Indian	OW	NEW
Williams Tribal 2-4D-54	4	050S	040W	4301352652		Indian	OW	NEW
Williams Tribal 1-4D-54	4	050S	040W	4301352653		Indian	OW	NEW
Federal 9-8D-64	9	060S	040W	4301352880		Federal	OW	NEW
Federal 16-8D-64	9	060S	040W	4301352881		Federal	OW	NEW
LC Nielsen Tribal 6-33D-56	33	050S	060W	4301352896		Indian	OW	NEW
LC Nielsen Tribal 2-33D-56	33	050S	060W	4301352897		Indian	OW	NEW
LC Nielsen Tribal 4-33D-56	33	050S	060W	4301352898		Indian	OW	NEW
LC Nielsen Tribal 5-33D-56	33	050S	060W	4301352899		Indian	OW	NEW
UTE FEE 13-9D-54	9	050S	040W	4301352906		Fee	OW	NEW
UTE FEE 2-34D-55	27	050S	050W	4301352971		Fee	OW	NEW
Federal 13-7D-65	7	060S	050W	4301352974		Federal	OW	NEW
Federal 14-7D-65	7	060S	050W	4301352975		Federal	OW	NEW
UTE TRIBAL 6-27D-55	27	050S	050W	4301352976		Indian	OW	NEW
LC Nielsen Tribal 12-27D-56	27	050S	060W	4301352977		Indian	OW	NEW
LC Nielsen Tribal 13-27D-56	27	050S	060W	4301352978		Indian	OW	NEW
LC Nielsen Tribal 16-28D-56	27	050S	060W	4301352979		Indian	OW	NEW
LC Nielsen Fee 9-28D-56	27	050S	060W	4301352980		Fee	OW	NEW
LC FEE 9-36D-56	36	050S	060W	4301352982		Fee	OW	NEW
LC FEE 15-36D-56	36	050S	060W	4301352983		Fee	OW	NEW
LC TRIBAL 6-36D-56	36	050S	060W	4301352984		Indian	OW	NEW
LC TRIBAL 5-36D-56	36	050S	060W	4301352985		Indian	OW	NEW
LC TRIBAL 4-36D-56	36	050S	060W	4301352986		Indian	OW	NEW
LC TRIBAL 3-36D-56	36	050S	060W	4301352987		Indian	OW	NEW
LC TRIBAL 2-35D-56	35	050S	060W	4301352988		Indian	OW	NEW
LC TRIBAL 1-35D-56	35	050S	060W	4301352989		Indian	OW	NEW
UTE TRIBAL 13-3R-54	3	050S	040W	4301330924	9488	Indian	OW	OPS
UTE TRIBAL 3-20D-55	20	050S	050W	4301333280	18424	Indian	OW	OPS
LC TRIBAL 4H-17-56	17	050S	060W	4301333540	18067	Indian	OW	OPS
LC TRIBAL 16-21-46	21	040S	060W	4301333575	16156	Indian	OW	OPS
UTE TRIBAL 8-20D-55	20	050S	050W	4301333676	17308	Indian	OW	OPS
UTE TRIBAL 14-14D-55	14	050S	050W	4301333699	18409	Indian	OW	OPS
UTE TRIBAL 5-29D-55	29	050S	050W	4301333740	17306	Indian	OW	OPS
UTE TRIBAL 7-32D-55	32	050S	050W	4301333794	18359	Indian	OW	OPS
UTE TRIBAL 12-27D-55	27	050S	050W	4301333798	18360	Indian	OW	OPS
FOY 9-33D-55	33	050S	050W	4301333802	17125	Fee	OW	OPS
BERRY TRIBAL 2-23D-54	23	050S	040W	4301333805	18546	Indian	OW	OPS
UTE TRIBAL 13-29D-55	29	050S	050W	4301333807	18378	Indian	OW	OPS
UTE TRIBAL 16-28D-55	28	050S	050W	4301333887	18594	Indian	OW	OPS
LC FEE 8-15D-56	15	050S	060W	4301350597	19347	Fee	OW	OPS
SFW FEE 13-10D-54	10	050S	040W	4301350892	19186	Fee	OW	OPS
SFW TRIBAL 11-10D-54	10	050S	040W	4301350893	19215	Indian	OW	OPS
LC TRIBAL 5HH-5-56	4	050S	060W	4301350927	18463	Indian	OW	OPS
LC TRIBAL 16-34D-45	34	040S	050W	4301350977	18658	Indian	OW	OPS
LC TRIBAL 3-4D-56	4	050S	060W	4301351000	18852	Indian	OW	OPS
FEDERAL 7-12D-65	12	060S	050W	4301351058	18717	Federal	OW	OPS
LC TRIBAL 2-33D-45	33	040S	050W	4301351402	18854	Indian	OW	OPS
LC TRIBAL 9-3D-56	3	050S	060W	4301351514	18948	Indian	OW	OPS
LC Tribal 3-34D-56	34	050S	060W	4301352087	19234	Indian	OW	OPS
LC Tribal 7-34D-56	34	050S	060W	4301352088	19235	Indian	OW	OPS
Ute Tribal 5-9D-54	9	050S	040W	4301352463	19354	Indian	OW	OPS
Ute Tribal 3-9D-54	9	050S	040W	4301352464	19355	Indian	OW	OPS
BC UTE TRIBAL 4-22	22	050S	040W	4301330755	2620	Indian	OW	P

B C UTE TRIBAL 16-16	16	050S	040W	4301330841	9489	Indian	OW	P	
B C UTE TRIBAL 14-15	15	050S	040W	4301330842	9440	Indian	OW	P	
UTE TRIBAL 1-32R	32	050S	040W	4301330872	13020	Indian	OW	P	
UTE TRIBAL 23-3R	23	050S	040W	4301330886	13034	Indian	OW	P	
S COTTONWOOD RIDGE UTE TRIBAL 1-19	19	050S	040W	4301330933	9845	Indian	OW	P	BRUNDAGE CANYON
TABBY CYN UTE TRIBAL 1-25	25	050S	050W	4301330945	9722	Indian	OW	P	
S BRUNDAGE UTE TRIBAL 1-30	30	050S	040W	4301330948	9850	Indian	OW	P	
SOWERS CYN UTE TRIBAL 3-26	26	050S	050W	4301330955	10423	Indian	OW	P	
UTE TRIBAL 3-24R-55 (REENTRY)	24	050S	050W	4301330960	15173	Indian	OW	P	
UTE TRIBAL 1-20	20	050S	040W	4301330966	9925	Indian	OW	P	
T C UTE TRIBAL 9-23X	23	050S	050W	4301330999	9720	Indian	OW	P	
UTE TRIBAL 15-24R	24	050S	050W	4301331129	11985	Indian	OW	P	
S BRUNDAGE CYN UTE TRIBAL 4-27	27	050S	040W	4301331131	9851	Indian	OW	P	
UTE TRIBAL 5-13	13	050S	050W	4301331152	10421	Indian	OW	P	
UTE TRIBAL 7-20R-54	20	050S	040W	4301331281	14088	Indian	OW	P	
Z and T UTE TRIBAL 7-19	19	050S	040W	4301331282	11131	Indian	OW	P	BRUNDAGE CANYON
UTE TRIBAL 13-19	19	050S	040W	4301331284	11134	Indian	OW	P	
Z and T UTE TRIBAL 7-25	25	050S	050W	4301331310	11416	Indian	OW	P	
UTE TRIBAL 13-17	17	050S	040W	4301331546	11921	Indian	OW	P	BRUNDAGE CANYON
UTE TRIBAL 11-19	19	050S	040W	4301331547	11920	Indian	OW	P	
UTE TRIBAL 13-22	22	050S	040W	4301331548	11926	Indian	OW	P	
UTE TRIBAL 1-28	28	050S	040W	4301331549	11925	Indian	OW	P	
UTE TRIBAL 4-30	30	050S	040W	4301331550	11914	Indian	OW	P	
UTE TRIBAL 15-16	16	050S	040W	4301331648	11951	Indian	OW	P	
UTE TRIBAL 16-18	18	050S	040W	4301331650	11946	Indian	OW	P	BRUNDAGE CANYON
UTE TRIBAL 5-20	20	050S	040W	4301331651	11957	Indian	OW	P	
UTE TRIBAL 15-23	23	050S	050W	4301331671	11989	Indian	OW	P	
TABBY CANYON 1-21	21	050S	050W	4301331699	12225	Indian	OW	P	
TABBY CANYON 8-22	22	050S	050W	4301331700	12008	Indian	OW	P	
SOWERS CANYON 9-27	27	050S	050W	4301331701	11997	Indian	OW	P	
UTE TRIBAL 3-19	19	050S	040W	4301331830	12197	Indian	OW	P	
UTE TRIBAL 9-19	19	050S	040W	4301331831	12175	Indian	OW	P	
UTE TRIBAL 15-19	19	050S	040W	4301331832	12180	Indian	OW	P	
UTE TRIBAL 2-25	25	050S	050W	4301331833	12153	Indian	OW	P	
UTE TRIBAL 3-25	25	050S	050W	4301331834	12152	Indian	OW	P	
UTE TRIBAL 11-24	24	050S	050W	4301331909	12190	Indian	OW	P	
UTE TRIBAL 13-24	24	050S	050W	4301331910	12217	Indian	OW	P	
UTE TRIBAL 11-25	25	050S	050W	4301331911	12182	Indian	OW	P	
UTE TRIBAL 1-26	26	050S	050W	4301331912	12235	Indian	OW	P	
UTE TRIBAL 2-19	19	050S	040W	4301332140	12795	Indian	OW	P	BRUNDAGE CANYON
UTE TRIBAL 6-25H	25	050S	050W	4301332143	12750	Indian	OW	P	
UTE TRIBAL 9-18	18	050S	040W	4301332144	12746	Indian	OW	P	BRUNDAGE CANYON
UTE TRIBAL 11-17	17	050S	040W	4301332145	12747	Indian	OW	P	BRUNDAGE CANYON
UTE TRIBAL 12-17	17	050S	040W	4301332146	12745	Indian	OW	P	BRUNDAGE CANYON
UTE TRIBAL 14-17	17	050S	040W	4301332147	12755	Indian	OW	P	BRUNDAGE CANYON
UTE TRIBAL 15-18	18	050S	040W	4301332148	12794	Indian	OW	P	BRUNDAGE CANYON
UTE TRIBAL 6-22	22	050S	040W	4301332163	12974	Indian	OW	P	
UTE TRIBAL 6-21	21	050S	040W	4301332164	12994	Indian	OW	P	
UTE TRIBAL 7-28	28	050S	040W	4301332166	12995	Indian	OW	P	
UTE TRIBAL 11-20	20	050S	040W	4301332168	12946	Indian	OW	P	
UTE TRIBAL 13-25	25	050S	050W	4301332169	12857	Indian	OW	P	
UTE TRIBAL 2-27	27	050S	040W	4301332179	12975	Indian	OW	P	
UTE TRIBAL 1-33	33	050S	040W	4301332185	13024	Indian	OW	P	
UTE TRIBAL 1-34	34	050S	040W	4301332186	13121	Indian	OW	P	
UTE TRIBAL 2-35	35	050S	050W	4301332187	13021	Indian	OW	P	
UTE TRIBAL 4-36	36	050S	050W	4301332188	13063	Indian	OW	P	
UTE TRIBAL 5-28	28	050S	040W	4301332189	13026	Indian	OW	P	
UTE TRIBAL 5-31	31	050S	040W	4301332190	13080	Indian	OW	P	
UTE TRIBAL 9-26	26	050S	040W	4301332191	13101	Indian	OW	P	
UTE TRIBAL 11-28	28	050S	040W	4301332192	13022	Indian	OW	P	
UTE TRIBAL 3-29	29	050S	040W	4301332193	13042	Indian	OW	P	
UTE TRIBAL 5-19	19	050S	040W	4301332204	13090	Indian	OW	P	
UTE TRIBAL 12-15	15	050S	040W	4301332205	13100	Indian	OW	P	
UTE TRIBAL 13-20	20	050S	040W	4301332206	13048	Indian	OW	P	
UTE TRIBAL 1-24-55	24	050S	050W	4301332259	13618	Indian	OW	P	
UTE TRIBAL 3-28-54	28	050S	040W	4301332261	13644	Indian	OW	P	

UTE TRIBAL 5-24-55	24	050S	050W	4301332263	13621	Indian	OW	P	
UTE TRIBAL 5-26-55	26	050S	050W	4301332264	13642	Indian	OW	P	
UTE TRIBAL 6-36-55	36	050S	050W	4301332265	13600	Indian	OW	P	
UTE TRIBAL 9-24-55	24	050S	050W	4301332268	13620	Indian	OW	P	
UTE TRIBAL 11-23-55	23	050S	050W	4301332269	13572	Indian	OW	P	
UTE TRIBAL 15-25-55	25	050S	050W	4301332271	13566	Indian	OW	P	
UTE TRIBAL 16-14-55	14	050S	050W	4301332272	13567	Indian	OW	P	
UTE TRIBAL 15-27-55	27	050S	050W	4301332339	14020	Indian	OW	P	
UTE TRIBAL 5-15-55	15	050S	050W	4301332344	13606	Indian	OW	P	
UTE TRIBAL 7-20-55	20	050S	050W	4301332346	13607	Indian	OW	P	
MOON TRIBAL 12-23-54	23	050S	040W	4301332347	14008	Indian	OW	P	
UTE TRIBAL 14-28-55	28	050S	050W	4301332348	13580	Indian	OW	P	
UTE TRIBAL 16-29-55	29	050S	050W	4301332349	13581	Indian	OW	P	
UTE TRIBAL 2-32-55	32	050S	050W	4301332350	13695	Indian	OW	P	
UTE TRIBAL 16-35-55	35	050S	050W	4301332352	14267	Indian	OW	P	
UTE TRIBAL 10-35-55	35	050S	050W	4301332353	13645	Indian	OW	P	
UTE TRIBAL 12-36-55	36	050S	050W	4301332354	13643	Indian	OW	P	
UTE TRIBAL 14-36-55	36	050S	050W	4301332355	14262	Indian	OW	P	
UTE TRIBAL 16-36-55	36	050S	050W	4301332356	14122	Indian	OW	P	
UTE TRIBAL 4-33-55	33	050S	050W	4301332357	13685	Indian	OW	P	
UTE TRIBAL 15-17-55	17	050S	050W	4301332358	13698	Indian	OW	P	
UTE TRIBAL 12-14-54	14	050S	040W	4301332369	13647	Indian	OW	P	
UTE TRIBAL 3-20-54	20	050S	040W	4301332377	13955	Indian	OW	P	BRUNDAGE CANYON
UTE TRIBAL 4-21-54	21	050S	040W	4301332378	13907	Indian	OW	P	
UTE TRIBAL 9-20-54	20	050S	040W	4301332379	13906	Indian	OW	P	
UTE TRIBAL 5-30-54	30	050S	040W	4301332380	13905	Indian	OW	P	
UTE TRIBAL 16-21-54	21	050S	040W	4301332381	13912	Indian	OW	P	BERRY PILOT EOR 246-02
UTE TRIBAL 15-30-54	30	050S	040W	4301332382	13944	Indian	OW	P	
UTE TRIBAL 9-30-54	30	050S	040W	4301332383	14050	Indian	OW	P	
UTE TRIBAL 14-21-54	21	050S	040W	4301332384	13946	Indian	OW	P	
UTE TRIBAL 12-21-54	21	050S	040W	4301332385	13928	Indian	OW	P	
UTE TRIBAL 15-20-54	20	050S	040W	4301332386	13911	Indian	OW	P	
UTE TRIBAL 13-28-54	28	050S	040W	4301332387	13908	Indian	OW	P	
UTE TRIBAL 9-28-54	28	050S	040W	4301332388	13910	Indian	OW	P	
UTE TRIBAL 15-28-54	28	050S	040W	4301332389	13909	Indian	OW	P	
UTE TRIBAL 9-25-55	25	050S	050W	4301332390	13715	Indian	OW	P	
MOON TRIBAL 6-27-54	27	050S	040W	4301332407	13969	Indian	OW	P	
MOON TRIBAL 14-27-54	27	050S	040W	4301332408	13998	Indian	OW	P	
UTE TRIBAL 3-32-54	32	050S	040W	4301332410	13949	Indian	OW	P	
UTE TRIBAL 7-32-54	32	050S	040W	4301332411	13936	Indian	OW	P	
UTE TRIBAL 7-33-54	33	050S	040W	4301332413	13945	Indian	OW	P	
UTE TRIBAL 11-20-55	20	050S	050W	4301332415	14269	Indian	OW	P	
UTE TRIBAL 1-27-55	27	050S	050W	4301332416	13947	Indian	OW	P	
UTE TRIBAL 3-27-55	27	050S	050W	4301332417	14022	Indian	OW	P	
UTE TRIBAL 7-27-55	27	050S	050W	4301332418	13948	Indian	OW	P	
UTE TRIBAL 10-28-55	28	050S	050W	4301332419	14580	Indian	OW	P	
UTE TRIBAL 6-32-55	32	050S	050W	4301332420	14895	Indian	OW	P	
UTE TRIBAL 8-32-55	32	050S	050W	4301332421	14896	Indian	OW	P	
UTE TRIBAL 2-36-55	36	050S	050W	4301332422	13937	Indian	OW	P	
UTE TRIBAL 8-36-55	36	050S	050W	4301332423	14021	Indian	OW	P	
UTE TRIBAL 13-16-54	16	050S	040W	4301332511	13981	Indian	OW	P	
UTE TRIBAL 13-23-55	23	050S	050W	4301332513	13975	Indian	OW	P	
UTE TRIBAL 7-23-55	23	050S	050W	4301332514	13976	Indian	OW	P	
UTE TRIBAL 5-33-54	33	050S	040W	4301332521	14060	Indian	OW	P	
UTE TRIBAL 11-33-54	33	050S	040W	4301332522	14061	Indian	OW	P	
UTE TRIBAL 14-32-54	32	050S	040W	4301332523	14062	Indian	OW	P	
UTE TRIBAL 1-23-55	23	050S	050W	4301332524	14044	Indian	OW	P	
UTE TRIBAL 5-29-54	29	050S	040W	4301332525	14045	Indian	OW	P	
UTE TRIBAL 1-31-54	31	050S	040W	4301332526	14116	Indian	OW	P	
UTE TRIBAL 3-31-54	31	050S	040W	4301332527	14109	Indian	OW	P	
UTE TRIBAL 7-31-54	31	050S	040W	4301332528	14160	Indian	OW	P	
UTE TRIBAL 9-31-54	31	050S	040W	4301332529	14177	Indian	OW	P	
UTE TRIBAL 11-31-54	31	050S	040W	4301332530	14163	Indian	OW	P	
UTE TRIBAL 3-23-55	23	050S	050W	4301332536	14077	Indian	OW	P	
UTE TRIBAL 5-23-55	23	050S	050W	4301332537	14108	Indian	OW	P	
UTE TRIBAL 9-32-54	32	050S	040W	4301332538	14199	Indian	OW	P	

UTE TRIBAL 5-32-54	32	050S	040W	4301332539	14112	Indian	OW	P	
MOON TRIBAL 10-27-54	27	050S	040W	4301332540	14195	Indian	OW	P	
MOON TRIBAL 12-27-54	27	050S	040W	4301332541	14161	Indian	OW	P	
MOON TRIBAL 8-27-54	27	050S	040W	4301332543	14139	Indian	OW	P	
UTE TRIBAL 9-33-54	33	050S	040W	4301332549	14162	Indian	OW	P	
WILLIAMSON TRIBAL 3-34-54	34	050S	040W	4301332550	14222	Indian	OW	P	
WILLIAMSON TRIBAL 5-34-54	34	050S	040W	4301332551	14235	Indian	OW	P	
FEDERAL 6-2-65	2	060S	050W	4301332557	14655	Federal	OW	P	
UTE TRIBAL 15-29-54	29	050S	040W	4301332561	14316	Indian	OW	P	
UTE TRIBAL 7-29-54	29	050S	040W	4301332562	14354	Indian	OW	P	
UTE TRIBAL 11-29-54	29	050S	040W	4301332563	14337	Indian	OW	P	
UTE TRIBAL 13-29-54	29	050S	040W	4301332564	14315	Indian	OW	P	
UTE TRIBAL 4-29-54	29	050S	040W	4301332565	14367	Indian	OW	P	
UTE TRIBAL 9-29-54	29	050S	040W	4301332566	14369	Indian	OW	P	
UTE TRIBAL 1-35-54	35	050S	040W	4301332567	14266	Indian	OW	P	
UTE TRIBAL 11-13-54	13	050S	040W	4301332568	14281	Indian	OW	P	
UTE TRIBAL 6-24-54	24	050S	040W	4301332570	14299	Indian	OW	P	
UTE TRIBAL 13-18-54	18	050S	040W	4301332571	14388	Indian	OW	P	
UTE TRIBAL 12-29-54	29	050S	040W	4301332572	14336	Indian	OW	P	
UTE TRIBAL 4-24-54	24	050S	040W	4301332573	14247	Indian	OW	P	
UTE TRIBAL 6-14-54	14	050S	040W	4301332586	15270	Indian	OW	P	
UTE TRIBAL 10-15-54	15	050S	040W	4301332587	14194	Indian	OW	P	
UTE TRIBAL 16-15-54	15	050S	040W	4301332588	14311	Indian	OW	P	
UTE TRIBAL 11-16-54	16	050S	040W	4301332589	14178	Indian	OW	P	
UTE TRIBAL 8-22-54	22	050S	040W	4301332590	14219	Indian	OW	P	
UTE TRIBAL 2-22-54	22	050S	040W	4301332591	14328	Indian	OW	P	
UTE TRIBAL 10-22-54	22	050S	040W	4301332592	14218	Indian	OW	P	
UTE TRIBAL 14-22-54	22	050S	040W	4301332593	14220	Indian	OW	P	
UTE TRIBAL 13-13-55	13	050S	050W	4301332599	15134	Indian	OW	P	
UTE TRIBAL 13-14-55	14	050S	050W	4301332600	14236	Indian	OW	P	
UTE TRIBAL 13-15-55	15	050S	050W	4301332602	14263	Indian	OW	P	
UTE TRIBAL 10-21-55	21	050S	050W	4301332603	14385	Indian	OW	P	
UTE TRIBAL 2-22-55	22	050S	050W	4301332604	14268	Indian	OW	P	
UTE TRIBAL 3-22-55	22	050S	050W	4301332605	14298	Indian	OW	P	
UTE TRIBAL 9-22-55	22	050S	050W	4301332606	14330	Indian	OW	P	
UTE TRIBAL 11-22-55	22	050S	050W	4301332607	14329	Indian	OW	P	
UTE TRIBAL 5-27-55	27	050S	050W	4301332614	14881	Indian	OW	P	
UTE TRIBAL 11-27-55	27	050S	050W	4301332615	14882	Indian	OW	P	
UTE TRIBAL 12-22-55	22	050S	050W	4301332616	14370	Indian	OW	P	
UTE TRIBAL 15-22-55	22	050S	050W	4301332617	14921	Indian	OW	P	
UTE TRIBAL 8-25-55	25	050S	050W	4301332620	14365	Indian	OW	P	
UTE TRIBAL 4-20-54	20	050S	040W	4301332621	14518	Indian	OW	P	BRUNDAGE CANYON
UTE TRIBAL 6-20-54	20	050S	040W	4301332622	14382	Indian	OW	P	BRUNDAGE CANYON
UTE TRIBAL 5-22-54	22	050S	040W	4301332624	14547	Indian	OW	P	
UTE TRIBAL 3-30-54	30	050S	040W	4301332625	14364	Indian	OW	P	
UTE TRIBAL 3-10-54	10	050S	040W	4301332663	14414	Indian	OW	P	
UTE TRIBAL 11-5-54	5	050S	040W	4301332664	14415	Indian	OW	P	
UTE TRIBAL 15-32-54	32	050S	040W	4301332666	14460	Indian	OW	P	
UTE TRIBAL 8-31-55	31	050S	050W	4301332673	14407	Indian	OW	P	
UTE TRIBAL 3-35-54	35	050S	040W	4301332675	14656	Indian	OW	P	
UTE TRIBAL 2-30-55	30	050S	050W	4301332680	14427	Indian	OW	P	
UTE TRIBAL 9-17-54	17	050S	040W	4301332687	15309	Indian	OW	P	
UTE TRIBAL 13-31-54	31	050S	040W	4301332688	14517	Indian	OW	P	
UTE TRIBAL 14-19-54	19	050S	040W	4301332690	14546	Indian	OW	P	
UTE TRIBAL 16-19-54	19	050S	040W	4301332691	14491	Indian	OW	P	
UTE TRIBAL 13-32-54	32	050S	040W	4301332692	14490	Indian	OW	P	
UTE TRIBAL 11-14-55	14	050S	050W	4301332693	15136	Indian	OW	P	
UTE TRIBAL 8-28-55	28	050S	050W	4301332694	14574	Indian	OW	P	
FEDERAL 6-1-65	1	060S	050W	4301332699	15776	Federal	OW	P	
UTE TRIBAL 9-15-55	15	050S	050W	4301332701	14573	Indian	OW	P	
UTE TRIBAL 14-20-54	20	050S	040W	4301332702	14459	Indian	OW	P	
#1 DLB 12-15-56	15	050S	060W	4301332710	14943	Fee	GW	P	
UTE TRIBAL 12-19-54	19	050S	040W	4301332716	14627	Indian	OW	P	
UTE TRIBAL 10-19-54	19	050S	040W	4301332717	14628	Indian	OW	P	
UTE TRIBAL 16-30-54	30	050S	040W	4301332718	14604	Indian	OW	P	
UTE TRIBAL 11-12-55	12	050S	050W	4301332721	14605	Indian	OW	P	

NIELSEN MARSING 13-14-56	14	050S	060W	4301332737	15060	Fee	OW	P	
TAYLOR HERRICK 10-22-56	22	050S	060W	4301332738	15058	Fee	OW	P	
UTE TRIBAL 16-20-54	20	050S	040W	4301332739	14671	Indian	OW	P	
UTE TRIBAL 10-20-54	20	050S	040W	4301332740	14691	Indian	OW	P	
UTE TRIBAL 4-28-54	28	050S	040W	4301332741	14672	Indian	OW	P	
UTE TRIBAL 13-33-54	33	050S	040W	4301332742	14736	Indian	OW	P	
UTE TRIBAL 15-31-54	31	050S	040W	4301332743	14690	Indian	OW	P	
UTE TRIBAL 8-30-54	30	050S	040W	4301332746	15583	Indian	OW	P	
UTE TRIBAL 10-25-55	25	050S	050W	4301332749	14758	Indian	OW	P	
UTE TRIBAL 14-25-55	25	050S	050W	4301332750	14798	Indian	OW	P	
UTE TRIBAL 3-36-55	36	050S	050W	4301332751	14842	Indian	OW	P	
UTE TRIBAL 16-16-55	16	050S	050W	4301332757	14865	Indian	OW	P	
UTE TRIBAL 3-21-55	21	050S	050W	4301332758	15112	Indian	OW	P	
UTE TRIBAL 16-25-55	25	050S	050W	4301332759	14821	Indian	OW	P	
UTE TRIBAL 1-36-55	36	050S	050W	4301332760	14822	Indian	OW	P	
UTE TRIBAL 7-22-54	22	050S	040W	4301332761	15661	Indian	OW	P	
UTE TRIBAL 2-31-54	31	050S	040W	4301332762	14845	Indian	OW	P	
UTE TRIBAL 2-28-54	28	050S	040W	4301332763	14723	Indian	OW	P	
UTE TRIBAL 10-28-54	28	050S	040W	4301332764	14722	Indian	OW	P	
UTE TRIBAL 12-28-54	28	050S	040W	4301332765	14701	Indian	OW	P	
UTE TRIBAL 8-28-54	28	050S	040W	4301332766	14777	Indian	OW	P	
UTE TRIBAL 4-31-54	31	050S	040W	4301332767	14494	Indian	OW	P	
UTE TRIBAL 15-33-54	33	050S	040W	4301332768	15210	Indian	OW	P	
UTE TRIBAL 12-25-55	25	050S	050W	4301332769	14799	Indian	OW	P	
UTE TRIBAL 16-24-54	24	050S	040W	4301332775	14762	Indian	OW	P	
UTE TRIBAL 14-25-54	25	050S	040W	4301332776	14753	Indian	OW	P	
UTE TRIBAL 8-25-54	25	050S	040W	4301332780	15280	Indian	OW	P	
UTE TRIBAL 9-35-54	35	050S	040W	4301332781	15535	Indian	OW	P	
MYRIN TRIBAL 14-19-55	19	050S	050W	4301332782	15184	Indian	OW	P	
UTE TRIBAL 6-30-55	30	050S	050W	4301332783	15163	Indian	OW	P	
MOON TRIBAL 4-23-54	23	050S	040W	4301332800	14985	Indian	OW	P	
MOON TRIBAL 5-27-54	27	050S	040W	4301332802	14984	Indian	OW	P	
UTE TRIBAL 2-32-54	32	050S	040W	4301332803	15151	Indian	OW	P	
UTE TRIBAL 15-35-54	35	050S	040W	4301332804	15185	Indian	OW	P	
UTE TRIBAL 5-35-54	35	050S	040W	4301332805	15485	Indian	OW	P	
UTE TRIBAL 13-35-54	35	050S	040W	4301332806	15292	Indian	OW	P	
UTE TRIBAL 11-35-54	35	050S	040W	4301332807	15317	Indian	OW	P	
UTE TRIBAL 8-19-54	19	050S	040W	4301332840	14946	Indian	OW	P	BRUNDAGE CANYON
UTE TRIBAL 13-20-55	20	050S	050W	4301332841	15097	Indian	OW	P	
UTE TRIBAL 16-22-54	22	050S	040W	4301332842	15015	Indian	OW	P	
MOON TRIBAL 6-23-54	23	050S	040W	4301332843	15113	Indian	OW	P	
UTE TRIBAL 11-26-54	26	050S	040W	4301332844	15233	Indian	OW	P	
MOON TRIBAL 11-27-54	27	050S	040W	4301332845	15135	Indian	OW	P	
MOON TRIBAL 15-27-54	27	050S	040W	4301332846	15115	Indian	OW	P	
UTE TRIBAL 10-31-54	31	050S	040W	4301332847	14956	Indian	OW	P	
ST TRIBAL 6-15-54	15	050S	040W	4301332848	16656	Indian	OW	P	
ST TRIBAL 2-15-54	15	050S	040W	4301332849	16959	Indian	OW	P	
ST TRIBAL 4-15-54	15	050S	040W	4301332850	17478	Indian	OW	P	
ST TRIBAL 8-15-54	15	050S	040W	4301332851	16279	Indian	OW	P	
UTE TRIBAL 11-25-54	25	050S	040W	4301332856	15430	Indian	OW	P	
UTE TRIBAL 3-30-55	30	050S	050W	4301332862	15340	Indian	OW	P	
UTE TRIBAL 7-19-55	19	050S	050W	4301332863	15279	Indian	OW	P	
UTE TRIBAL 8-19-55	19	050S	050W	4301332864	15241	Indian	OW	P	
UTE TRIBAL 6-19-54	19	050S	040W	4301332865	14947	Indian	OW	P	
UTE TRIBAL 12-20-54	20	050S	040W	4301332866	14924	Indian	OW	P	
UTE TRIBAL 3-21-54	21	050S	040W	4301332867	15554	Indian	OW	P	
UTE TRIBAL 2-26-54	26	050S	040W	4301332868	15231	Indian	OW	P	
UTE TRIBAL 8-31-54	31	050S	040W	4301332869	14970	Indian	OW	P	
UTE TRIBAL 8-32-54	32	050S	040W	4301332870	15152	Indian	OW	P	
UTE TRIBAL 4-33-54	33	050S	040W	4301332871	15040	Indian	OW	P	
UTE TRIBAL 6-33-54	33	050S	040W	4301332872	15059	Indian	OW	P	
UTE TRIBAL 9-22-54	22	050S	040W	4301332889	15607	Indian	OW	P	
UTE TRIBAL 5-26-54	26	050S	040W	4301332890	15268	Indian	OW	P	
UTE TRIBAL 13-26-54	26	050S	040W	4301332891	15287	Indian	OW	P	
UTE TRIBAL 6-28D-54	28	050S	040W	4301332892	15232	Indian	OW	P	
UTE TRIBAL 2-30D-54	30	050S	040W	4301332894	15298	Indian	OW	P	

UTE TRIBAL 4-32-54	32	050S	040W	4301332896	15555	Indian	OW	P	
UTE TRIBAL 6-32D-54	32	050S	040W	4301332897	15312	Indian	OW	P	
UTE TRIBAL 2-33D-54	33	050S	040W	4301332898	15271	Indian	OW	P	
UTE TRIBAL 12-32-54	32	050S	040W	4301332925	15503	Indian	OW	P	
UTE TRIBAL 16-32D-54	32	050S	040W	4301332926	16971	Indian	OW	P	
MOON TRIBAL 16-23-54	23	050S	040W	4301332927	15219	Indian	OW	P	
UTE TRIBAL 4-25-55	25	050S	050W	4301332928	15421	Indian	OW	P	
UTE TRIBAL 7-36-55	36	050S	050W	4301332929	15341	Indian	OW	P	
MOON TRIBAL 10-2-54	2	050S	040W	4301332931	15429	Indian	OW	P	
UTE TRIBAL 10-24-54	24	050S	040W	4301332932	15364	Indian	OW	P	
MYRIN TRIBAL 16-19-55	19	050S	050W	4301332934	15339	Indian	OW	P	
UTE TRIBAL 2-31-55	31	050S	050W	4301332935	15428	Indian	OW	P	
UTE TRIBAL 10-31-55	31	050S	050W	4301332936	15354	Indian	OW	P	
MOON TRIBAL 1-27-54	27	050S	040W	4301332937	15308	Indian	OW	P	
MOON TRIBAL 5-23-54	23	050S	040W	4301332938	15584	Indian	OW	P	
ST TRIBAL 7-18-54	18	050S	040W	4301332952	15724	Indian	OW	P	
ST TRIBAL 5-18-54	18	050S	040W	4301332953	15781	Indian	OW	P	
UTE TRIBAL 15-15-54	15	050S	040W	4301332971	15310	Indian	OW	P	
UTE TRIBAL 4-19-54	19	050S	040W	4301332972	15382	Indian	OW	P	
UTE TRIBAL 8-20-54	20	050S	040W	4301332973	15245	Indian	OW	P	
UTE TRIBAL 2-20-54	20	050S	040W	4301332974	15269	Indian	OW	P	
UTE TRIBAL 7-15-55	15	050S	050W	4301332976	15311	Indian	OW	P	
UTE TRIBAL 10-15-55	15	050S	050W	4301332977	15380	Indian	OW	P	
UTE TRIBAL 1-15-55	15	050S	050W	4301332978	15299	Indian	OW	P	
UTE TRIBAL 14-15-55	15	050S	050W	4301332979	15369	Indian	OW	P	
UTE TRIBAL 11-15-55	15	050S	050W	4301332980	15342	Indian	OW	P	
UTE TRIBAL 14-18-55	18	050S	050W	4301332984	15671	Indian	OW	P	
UTE TRIBAL 14-24-56	24	050S	060W	4301332988	15740	Indian	OW	P	
UTE TRIBAL 7-24-56	24	050S	060W	4301332989	15782	Indian	OW	P	
UTE TRIBAL 11-25-56	25	050S	060W	4301332990	15627	Indian	OW	P	
UTE TRIBAL 7-25-56	25	050S	060W	4301332991	15617	Indian	OW	P	
UTE TRIBAL 5-25-56	25	050S	060W	4301332992	15648	Indian	OW	P	
UTE TRIBAL 3-25-56	25	050S	060W	4301332993	15561	Indian	OW	P	
UTE TRIBAL 13-15D-54	15	050S	040W	4301333039	15368	Indian	OW	P	
UTE TRIBAL 16-28D-54	28	050S	040W	4301333041	15377	Indian	OW	P	
UTE TRIBAL 14-31D-54	31	050S	040W	4301333042	15419	Indian	OW	P	
UTE TRIBAL 4-22-55	22	050S	050W	4301333044	15381	Indian	OW	P	
UTE TRIBAL 2-23-55	23	050S	050W	4301333045	15416	Indian	OW	P	
UTE TRIBAL 16-23-55	23	050S	050W	4301333046	15211	Indian	OW	P	
UTE TRIBAL 9-35-55	35	050S	050W	4301333047	15378	Indian	OW	P	
UTE TRIBAL 7-35-55	35	050S	050W	4301333048	15367	Indian	OW	P	
UTE TRIBAL 15-36-55	36	050S	050W	4301333049	15379	Indian	OW	P	
UTE TRIBAL 10-12-55	12	050S	050W	4301333055	15618	Indian	OW	P	
UTE TRIBAL 5-13-54	13	050S	040W	4301333075	15873	Indian	OW	P	
UTE TRIBAL 16-29-54	29	050S	040W	4301333076	17074	Indian	OW	P	
UTE TRIBAL 12-18-54	18	050S	040W	4301333077	15575	Indian	OW	P	
UTE TRIBAL 8-33-54	33	050S	040W	4301333089	15398	Indian	OW	P	
UTE TRIBAL 12-33-54	33	050S	040W	4301333090	15417	Indian	OW	P	
UTE TRIBAL 16-33-54	33	050S	040W	4301333091	15397	Indian	OW	P	
UTE TRIBAL 10-33-54	33	050S	040W	4301333092	15418	Indian	OW	P	
UTE TRIBAL 14-33-54	33	050S	040W	4301333093	15399	Indian	OW	P	
UTE TRIBAL 2-14-54	14	050S	040W	4301333111	16832	Indian	OW	P	
UTE TRIBAL 14-14-54	14	050S	040W	4301333112	15440	Indian	OW	P	
UTE TRIBAL 13-21-54	21	050S	040W	4301333113	15471	Indian	OW	P	
UTE TRIBAL 11-21-54	21	050S	040W	4301333115	15470	Indian	OW	P	
UTE TRIBAL 11-22-54	22	050S	040W	4301333116	15662	Indian	OW	P	
UTE TRIBAL 2-21-55	21	050S	050W	4301333117	15582	Indian	OW	P	
UTE TRIBAL 4-28-55	28	050S	050W	4301333118	15506	Indian	OW	P	
UTE TRIBAL 8-29-55	29	050S	050W	4301333119	15507	Indian	OW	P	
UTE TRIBAL 6-29-55	29	050S	050W	4301333120	15504	Indian	OW	P	
TAYLOR FEE 13-22-56	22	050S	060W	4301333121	15525	Fee	OW	P	
WILCOX ELIASON 7-15-56	15	050S	060W	4301333122	15526	Fee	OW	P	
UTE TRIBAL 14-16-54	16	050S	040W	4301333123	15639	Indian	OW	P	
UTE TRIBAL 1-16-54	16	050S	040W	4301333128	15420	Indian	OW	P	
UTE TRIBAL 7-16-54	16	050S	040W	4301333130	15455	Indian	OW	P	
UTE TRIBAL 12-16-54	16	050S	040W	4301333131	15456	Indian	OW	P	

UTE TRIBAL 16-17-54	17	050S	040W	4301333132	15524	Indian	OW	P	
UTE TRIBAL 10-17-54	17	050S	040W	4301333133	15581	Indian	OW	P	
UTE TRIBAL 12-24D-55	24	050S	050W	4301333134	15567	Indian	OW	P	
WILCOX FEE 1-20-56	20	050S	060W	4301333150	15745	Fee	OW	P	
WILCOX FEE 15-16-56	16	050S	060W	4301333151	15527	Fee	OW	P	
NIELSEN FEE 13-11-56	11	050S	060W	4301333152	15600	Fee	OW	P	
UTE TRIBAL 2-29-54	29	050S	040W	4301333153	15919	Indian	OW	P	
UTE TRIBAL 14-29-54	29	050S	040W	4301333154	15831	Indian	OW	P	
UTE TRIBAL 10-29-54	29	050S	040W	4301333155	15847	Indian	OW	P	
UTE TRIBAL 10-24D-55	24	050S	050W	4301333156	15556	Indian	OW	P	
UTE TRIBAL 10-29D-55	29	050S	050W	4301333157	15505	Indian	OW	P	
UTE TRIBAL 6-29-54	29	050S	040W	4301333172	15846	Indian	OW	P	
UTE TRIBAL 12Q-25-55	25	050S	050W	4301333184	15744	Indian	OW	P	
UTE TRIBAL 3G-31-54	31	050S	040W	4301333185	15746	Indian	OW	P	
UTE TRIBAL 1I-36-55	36	050S	050W	4301333186	15865	Indian	OW	P	
UTE TRIBAL 6-23D-55	23	050S	050W	4301333187	15996	Indian	OW	P	
UTE TRIBAL 8-14-54	14	050S	040W	4301333204	15656	Indian	OW	P	
UTE TRIBAL 10-14-54	14	050S	040W	4301333205	15680	Indian	OW	P	
UTE TRIBAL 11-15-54	15	050S	040W	4301333206	15643	Indian	OW	P	
UTE TRIBAL 9-16-54	16	050S	040W	4301333207	15660	Indian	OW	P	
UTE TRIBAL 3-22-54	22	050S	040W	4301333208	15640	Indian	OW	P	
UTE TRIBAL 15-13D-55	13	050S	050W	4301333212	15642	Indian	OW	P	
UTE TRIBAL 6-22D-55	22	050S	050W	4301333213	16831	Indian	OW	P	
UTE TRIBAL 11-36D-55	36	050S	050W	4301333214	15702	Indian	OW	P	
UTE TRIBAL 1-22D-54	22	050S	040W	4301333215	15641	Indian	OW	P	
BERRY TRIBAL 1-23-54	23	050S	040W	4301333216	15931	Indian	OW	P	
BERRY TRIBAL 15-23-54	23	050S	040W	4301333217	15932	Indian	OW	P	
UTE TRIBAL 9-36D-55	36	050S	050W	4301333239	15933	Indian	OW	P	
UTE TRIBAL 12-32-55	32	050S	050W	4301333266	15681	Indian	OW	P	
UTE TRIBAL 16-22D-55	22	050S	050W	4301333267	15703	Indian	OW	P	
UTE TRIBAL 11-13-55	13	050S	050W	4301333268	15692	Indian	OW	P	
UTE TRIBAL 7-14-55	14	050S	050W	4301333269	15693	Indian	OW	P	
UTE TRIBAL 4-14D-54	14	050S	040W	4301333270	15679	Indian	OW	P	
UTE TRIBAL 9S-19-54	19	050S	040W	4301333276	16153	Indian	OW	P	
UTE TRIBAL 14Q-28-54	28	050S	040W	4301333277	15818	Indian	OW	P	
UTE TRIBAL 14-28D-54	28	050S	040W	4301333278	15817	Indian	OW	P	
UTE TRIBAL 1-14D-55	14	050S	050W	4301333279	18408	Indian	OW	P	
UTE TRIBAL 10-18-54	18	050S	040W	4301333300	15747	Indian	OW	P	
UTE TRIBAL 5-21-54	21	050S	040W	4301333324	15748	Indian	OW	P	
UTE TRIBAL 6-31D-54	31	050S	040W	4301333325	16185	Indian	OW	P	
UTE TRIBAL 16-31D-54	31	050S	040W	4301333326	15800	Indian	OW	P	
UTE TRIBAL 16-13D-55	13	050S	050W	4301333327	15891	Indian	OW	P	
UTE TRIBAL 9-13D-55	13	050S	050W	4301333328	15892	Indian	OW	P	
UTE TRIBAL 15-21-55	21	050S	050W	4301333357	15791	Indian	OW	P	
UTE TRIBAL 10-23D-55	23	050S	050W	4301333358	15799	Indian	OW	P	
UTE TRIBAL 9-26D-55	26	050S	050W	4301333359	15853	Indian	OW	P	
UTE TRIBAL 10-26D-55	26	050S	050W	4301333360	15852	Indian	OW	P	
UTE TRIBAL 14-26D-55	26	050S	050W	4301333361	15938	Indian	OW	P	
UTE TRIBAL 15-26D-55	26	050S	050W	4301333362	15869	Indian	OW	P	
UTE TRIBAL 3-32D-55	32	050S	050W	4301333363	15936	Indian	OW	P	
UTE TRIBAL 13-14-54	14	050S	040W	4301333364	15790	Indian	OW	P	
MOON TRIBAL 7-27D-54	27	050S	040W	4301333365	15935	Indian	OW	P	
14-11-56 DLB	11	050S	060W	4301333378	15801	Fee	OW	P	
UTE TRIBAL 4-32-55	32	050S	050W	4301333379	15819	Indian	OW	P	
UTE TRIBAL 13H-16-55	16	050S	050W	4301333380	18357	Indian	OW	P	
BERRY TRIBAL 7-23-54	23	050S	040W	4301333381	15934	Indian	OW	P	
BERRY TRIBAL 9-34-54	34	050S	040W	4301333382	16024	Indian	OW	P	
BERRY TRIBAL 7-34-54	34	050S	040W	4301333383	16102	Indian	OW	P	
BERRY TRIBAL 4-34-54	34	050S	040W	4301333384	16588	Indian	OW	P	
FEDERAL 2-2-65	2	060S	050W	4301333385	16150	Federal	OW	P	
FEDERAL 10-3-65	3	060S	050W	4301333386	16297	Federal	OW	P	
FEDERAL 5-4-65	4	060S	050W	4301333387	17599	Federal	OW	P	
UTE TRIBAL 1A-29-54	29	050S	040W	4301333393	17075	Indian	OW	P	
BERRY TRIBAL 15-34-54	34	050S	040W	4301333411	16037	Indian	OW	P	
BERRY TRIBAL 8-23D-54	23	050S	040W	4301333417	16101	Indian	OW	P	
UTE TRIBAL 12-29D-55	29	050S	050W	4301333418	17307	Indian	OW	P	

UTE TRIBAL 8-24-55	24	050S	050W	4301333420	15997	Indian	OW	P	
UTE TRIBAL 5-25D-55	25	050S	050W	4301333421	16589	Indian	OW	P	
BERRY TRIBAL 10-34D-54	34	050S	040W	4301333422	16038	Indian	OW	P	
1-15-56 DLB	15	050S	060W	4301333447	15854	Fee	OW	P	
FEDERAL 5-3-64	3	060S	040W	4301333448	16098	Federal	OW	P	
FEDERAL 8-1-64	1	060S	040W	4301333449	16152	Federal	OW	P	
FEDERAL 5-4-64	4	060S	040W	4301333450	17851	Federal	OW	P	
FEDERAL 11-10-65	10	060S	050W	4301333451	16281	Federal	OW	P	
BERRY TRIBAL 16-34D-54	34	050S	040W	4301333464	16280	Indian	OW	P	
BERRY TRIBAL 9-23-54	23	050S	040W	4301333465	16590	Indian	OW	P	
UTE TRIBAL 6-26D-55	26	050S	050W	4301333476	16657	Indian	OW	P	
UTE TRIBAL 7-26D-55	26	050S	050W	4301333477	16658	Indian	OW	P	
UTE TRIBAL 11-26D-55	26	050S	050W	4301333478	16659	Indian	OW	P	
UTE TRIBAL 14Q-30-54	30	050S	040W	4301333479	16151	Indian	OW	P	
FEDERAL 5-6-65	6	060S	050W	4301333489	17852	Federal	OW	P	
FEDERAL 16-5-65	5	060S	050W	4301333490	16833	Federal	OW	P	
FEDERAL 6-11-65	11	060S	050W	4301333491	16335	Federal	OW	P	
LC TRIBAL 14-2-56	2	050S	060W	4301333492	18358	Indian	OW	P	
UTE TRIBAL 1-31-55	31	050S	050W	4301333501	17104	Indian	OW	P	
UTE TRIBAL 9-31-55	31	050S	050W	4301333508	17103	Indian	OW	P	
BERRY TRIBAL 11-34D-54	34	050S	040W	4301333529	16099	Indian	OW	P	
LC TRIBAL 2-16D-56	16	050S	060W	4301333538	17305	Indian	OW	P	
LC TRIBAL 4-16-56	16	050S	060W	4301333539	16272	Indian	OW	P	
LC TRIBAL 3-17-56	17	050S	060W	4301333541	16459	Indian	OW	P	
FEDERAL 10-2-65	2	060S	050W	4301333542	16181	Federal	OW	P	
UTE TRIBAL 4-20D-55	20	050S	050W	4301333549	18075	Indian	OW	P	
UTE TRIBAL 8-23D-55	23	050S	050W	4301333552	16662	Indian	OW	P	
LC TRIBAL 8-28-46	28	040S	060W	4301333576	16155	Indian	OW	P	
LC TRIBAL 7-3-56	3	050S	060W	4301333577	16379	Indian	OW	P	
LC TRIBAL 3-5-56	5	050S	060W	4301333580	17082	Indian	OW	P	
FEDERAL 8-2D-64	2	060S	040W	4301333581	16100	Federal	OW	P	
LC TRIBAL 13H-3-56	3	050S	060W	4301333591	18129	Indian	OW	P	
LC FEE 6-12-57	12	050S	070W	4301333593	17083	Fee	OW	P	
UTE TRIBAL 4-26D-54	26	050S	040W	4301333595	16591	Indian	OW	P	
LC TRIBAL 8-4-56	4	050S	060W	4301333605	17046	Indian	OW	P	
LC TRIBAL 12H-6-56	6	050S	060W	4301333606	18037	Indian	OW	P	
LC TRIBAL 7-7D-56	7	050S	060W	4301333607	18038	Indian	OW	P	
LC TRIBAL 1-9-56	9	050S	060W	4301333608	16380	Indian	OW	P	
UTE TRIBAL 5-14-54	14	050S	040W	4301333619	16945	Indian	OW	P	
UTE TRIBAL 10-26D-54	26	050S	040W	4301333620	16663	Indian	OW	P	
UTE TRIBAL 7-26D-54	26	050S	040W	4301333621	16664	Indian	OW	P	
UTE TRIBAL 13-36D-55	36	050S	050W	4301333624	17744	Indian	OW	P	
UTE TRIBAL 6-26D-54	26	050S	040W	4301333625	16619	Indian	OW	P	
UTE TRIBAL 1-22D-55	22	050S	050W	4301333626	16777	Indian	OW	P	
UTE TRIBAL 4-23D-55	23	050S	050W	4301333627	16818	Indian	OW	P	
UTE TRIBAL 2-27D-55	27	050S	050W	4301333628	16746	Indian	OW	P	
UTE TRIBAL 12-28D-55	28	050S	050W	4301333645	17999	Indian	OW	P	
UTE TRIBAL 13-28D-55	28	050S	050W	4301333646	18000	Indian	OW	P	
UTE TRIBAL 14-26D-54	26	050S	040W	4301333673	16299	Indian	OW	P	
UTE FEE 7-13D-55	13	050S	050W	4301333674	18089	Fee	OW	P	
UTE TRIBAL 9-20D-55	20	050S	050W	4301333675	17309	Indian	OW	P	
LC TRIBAL 11-17-56	17	050S	060W	4301333677	17600	Indian	OW	P	
UTE TRIBAL 1-26D-54	26	050S	040W	4301333680	16638	Indian	OW	P	
UTE TRIBAL 3-26D-54	26	050S	040W	4301333681	16665	Indian	OW	P	
UTE TRIBAL 8-26D-54	26	050S	040W	4301333682	17031	Indian	OW	P	
UTE TRIBAL 10-27D-55	27	050S	050W	4301333683	16666	Indian	OW	P	
UTE TRIBAL 14-27D-55	27	050S	050W	4301333684	16667	Indian	OW	P	
UTE TRIBAL 12-21D-55	21	050S	050W	4301333694	16296	Indian	OW	P	
UTE TRIBAL 5-21D-55	21	050S	050W	4301333706	16298	Indian	OW	P	
UTE TRIBAL 2-29D-55	29	050S	050W	4301333714	16854	Indian	OW	P	
UTE TRIBAL 7-29D-55	29	050S	050W	4301333715	16853	Indian	OW	P	
UTE TRIBAL 13-22D-55	22	050S	050W	4301333716	16668	Indian	OW	P	
UTE TRIBAL 14-22D-55	22	050S	050W	4301333717	16669	Indian	OW	P	
UTE FEE 2-13-55	13	050S	050W	4301333720	18659	Indian	OW	P	
UTE TRIBAL 7-22D-55	22	050S	050W	4301333721	16670	Indian	OW	P	
UTE TRIBAL 10-22D-55	22	050S	050W	4301333722	16671	Indian	OW	P	

UTE TRIBAL 3-29-55	29	050S	050W	4301333723	16857	Indian	OW	P	
BERRY TRIBAL 10-23D-54	23	050S	040W	4301333724	16592	Indian	OW	P	
BERRY TRIBAL 11-23D-54	23	050S	040W	4301333725	16672	Indian	OW	P	
UTE TRIBAL 4-24D-55	24	050S	050W	4301333726	16673	Indian	OW	P	
FEDERAL 6-6D-64	6	060S	040W	4301333745	17084	Federal	OW	P	
UTE TRIBAL 15-26D-54	26	050S	040W	4301333768	17450	Indian	OW	P	
UTE TRIBAL 1-14D-54	14	050S	040W	4301333769	17483	Indian	OW	P	
UTE TRIBAL 12-35D-55	35	050S	050W	4301333782	16856	Indian	OW	P	
UTE TRIBAL 11-35-55	35	050S	050W	4301333783	16855	Indian	OW	P	
UTE TRIBAL 1-28D-55	28	050S	050W	4301333784	16852	Indian	OW	P	
UTE TRIBAL 16-27D-55	27	050S	050W	4301333786	17800	Indian	OW	P	
UTE TRIBAL 9-28D-55	28	050S	050W	4301333787	16887	Indian	OW	P	
UTE TRIBAL 7-28D-55	28	050S	050W	4301333788	16886	Indian	OW	P	
UTE TRIBAL 11-32D-54	32	050S	040W	4301333793	17003	Indian	OW	P	
UTE TRIBAL 9-14D-54	14	050S	040W	4301333796	17482	Indian	OW	P	
UTE TRIBAL 4-27D-55	27	050S	050W	4301333797	16700	Indian	OW	P	
FOY TRIBAL 12H-33-55	33	050S	050W	4301333799	18232	Indian	OW	P	
UTE TRIBAL 9-32D-55	32	050S	050W	4301333800	18361	Indian	OW	P	
UTE TRIBAL 12-26D-54	26	050S	040W	4301333801	16639	Indian	OW	P	
UTE TRIBAL 8-26D-55	26	050S	050W	4301333859	17859	Indian	OW	P	
BERRY TRIBAL 2-34D-54	34	050S	040W	4301333867	17889	Indian	OW	P	
UTE TRIBAL 3-35D-55	35	050S	050W	4301333888	17421	Indian	OW	P	
UTE TRIBAL 10-32-54	32	050S	040W	4301333902	16819	Indian	OW	P	
UTE TRIBAL 12-31D-54	31	050S	040W	4301333907	17480	Indian	OW	P	
UTE TRIBAL 12-23D-55	23	050S	050W	4301333908	17814	Indian	OW	P	
UTE TRIBAL 14-20D-55	20	050S	050W	4301333909	18559	Indian	OW	P	
UTE TRIBAL 6-20D-55	20	050S	050W	4301333910	18481	Indian	OW	P	
UTE TRIBAL 12-20-55	20	050S	050W	4301333911	18520	Indian	OW	P	
UTE TRIBAL 14-24D-55	24	050S	050W	4301333912	16943	Indian	OW	P	
UTE TRIBAL 14-23D-55	23	050S	050W	4301333915	17457	Indian	OW	P	
ST TRIBAL 1-15D-54	15	050S	040W	4301333916	16889	Indian	OW	P	
ST TRIBAL 7-15D-54	15	050S	040W	4301333950	16972	Indian	OW	P	
ST TRIBAL 9-15D-54	15	050S	040W	4301333951	16973	Indian	OW	P	
UTE TRIBAL 15-35D-55	35	050S	050W	4301333954	17417	Indian	OW	P	
UTE TRIBAL 14-35D-55	35	050S	050W	4301333955	17416	Indian	OW	P	
UTE TRIBAL 16-26D-55	26	050S	050W	4301333965	17418	Indian	OW	P	
FEDERAL 1-2D-65	2	060S	050W	4301333966	16888	Federal	OW	P	
UTE TRIBAL 1-35D-55	35	050S	050W	4301333967	17420	Indian	OW	P	
UTE TRIBAL 10-36D-55	36	050S	050W	4301333968	17743	Indian	OW	P	
UTE TRIBAL 4-26D-55	26	050S	050W	4301333978	17455	Indian	OW	P	
UTE TRIBAL 2-26D-55	26	050S	050W	4301333979	17456	Indian	OW	P	
BERRY TRIBAL 14-23D-54	23	050S	040W	4301333989	17903	Indian	OW	P	
FEDERAL 3-2D-65	2	060S	050W	4301334001	16944	Federal	OW	P	
UTE TRIBAL 13-26D-55	26	050S	050W	4301334002	17481	Indian	OW	P	
FEDERAL 7-1D-65	1	060S	050W	4301334015	17775	Federal	OW	P	
FEDERAL 2-2D-64	2	060S	040W	4301334018	17086	Federal	OW	P	
FEDERAL 7-6D-64	6	060S	040W	4301334020	17085	Federal	OW	P	
UTE TRIBAL 6-35D-55	35	050S	050W	4301334028	17785	Indian	OW	P	
UTE TRIBAL 16-26-54	26	050S	040W	4301334042	17413	Indian	OW	P	
BERRY TRIBAL 13-23-54	23	050S	040W	4301334043	17100	Indian	OW	P	
UTE TRIBAL 11-28-55	28	050S	050W	4301334057	18001	Indian	OW	P	
UTE TRIBAL 8-27D-55	27	050S	050W	4301334058	17842	Indian	OW	P	
ST TRIBAL 3-15D-54	15	050S	040W	4301334059	17477	Indian	OW	P	
ST TRIBAL 5-15D-54	15	050S	040W	4301334060	17479	Indian	OW	P	
FEDERAL 7-11D-65	11	060S	050W	4301334061	17776	Federal	OW	P	
FEDERAL 7-3D-65	3	060S	050W	4301334065	17124	Federal	OW	P	
MOON TRIBAL 16-27D-54	27	050S	040W	4301334109	17414	Indian	OW	P	
UTE TRIBAL 15-22D-54	22	050S	040W	4301334116	17415	Indian	OW	P	
UTE TRIBAL 13-35D-55	35	050S	050W	4301334117	18442	Indian	OW	P	
UTE TRIBAL 12-26D-55	26	050S	050W	4301334118	17786	Indian	OW	P	
LC TRIBAL 13-16D-56	16	050S	060W	4301334282	17601	Indian	OW	P	
FEDERAL 11-6D-64	6	060S	040W	4301334284	17615	Federal	OW	P	
FEDERAL 14-6D-64	6	060S	040W	4301334285	17616	Federal	OW	P	
FEDERAL 2-6D-64	6	060S	040W	4301334286	17663	Federal	OW	P	
FEDERAL 3-5D-64	5	060S	040W	4301334287	17617	Federal	OW	P	
FEDERAL 6-5D-64	5	060S	040W	4301334288	17649	Federal	OW	P	

SFW TRIBAL 10-10D-54	10	050S	040W	4301334295	17564	Indian	OW	P
SFW TRIBAL 9-10D-54	10	050S	040W	4301334296	17565	Indian	OW	P
STATE TRIBAL 16-10-54	10	050S	040W	4301350245	17553	Indian	OW	P
UTE TRIBAL 6-14D-55	14	050S	050W	4301350246	17602	Indian	OW	P
SFW FEE 15-10-54	10	050S	040W	4301350247	17566	Fee	OW	P
FEDERAL 5-5D-64	5	060S	040W	4301350259	17648	Federal	OW	P
LC TRIBAL 6-22D-56	22	050S	060W	4301350260	17567	Indian	OW	P
FEDERAL 12-6D-64	6	060S	040W	4301350261	17618	Federal	OW	P
LC TRIBAL 4-27D-56	27	050S	060W	4301350262	17568	Indian	OW	P
FEDERAL 4-5D-64	5	060S	040W	4301350263	17661	Federal	OW	P
FEDERAL 1-6-64	6	060S	040W	4301350266	17662	Federal	OW	P
FEDERAL 4-6D-64	6	060S	040W	4301350267	17651	Federal	OW	P
FEDERAL 3-6D-64	6	060S	040W	4301350268	17650	Federal	OW	P
FEDERAL 5-6D-64	6	060S	040W	4301350269	17652	Federal	OW	P
FEDERAL 8-6D-64	6	060S	040W	4301350325	17664	Federal	OW	P
FEDERAL 10-1D-65	1	060S	050W	4301350326	18027	Federal	OW	P
FEDERAL 11-1D-65	1	060S	050W	4301350327	18039	Federal	OW	P
FEDERAL 12-1D-65	1	060S	050W	4301350328	18040	Federal	OW	P
FEDERAL 13-1D-65	1	060S	050W	4301350329	18042	Federal	OW	P
FEDERAL 14-1D-65	1	060S	050W	4301350330	18041	Federal	OW	P
FEDERAL 13-5D-64	5	060S	040W	4301350337	17714	Federal	OW	P
FEDERAL 14-5D-64	5	060S	040W	4301350338	17715	Federal	OW	P
FEDERAL 9-1D-65	1	060S	050W	4301350342	18026	Federal	OW	P
FEDERAL 13-6D-64	6	060S	040W	4301350347	17619	Federal	OW	P
FEDERAL 11-5D-64	5	060S	040W	4301350348	17690	Federal	OW	P
FEDERAL 12-5D-64	5	060S	040W	4301350349	17713	Federal	OW	P
FEDERAL 8-1D-65	1	060S	050W	4301350350	18025	Federal	OW	P
UTE TRIBAL 3-14D-54	14	050S	040W	4301350389	17904	Indian	OW	P
UTE TRIBAL 1-34D-55	34	050S	050W	4301350408	17931	Indian	OW	P
UTE TRIBAL 7-14-54	14	050S	040W	4301350409	17924	Indian	OW	P
UTE TRIBAL 8-21D-55	21	050S	050W	4301350435	17963	Indian	OW	P
UTE TRIBAL 8-34D-55	34	050S	050W	4301350436	17952	Indian	OW	P
UTE TRIBAL 5-16D-54	16	050S	040W	4301350475	17991	Indian	OW	P
UTE TRIBAL 12-14D-55	14	050S	050W	4301350476	17973	Indian	OW	P
UTE TRIBAL 8-15D-55	15	050S	050W	4301350477	17974	Indian	OW	P
UTE TRIBAL 3-14-55	14	050S	050W	4301350478	18002	Indian	OW	P
UTE TRIBAL 5-14-55	14	050S	050W	4301350479	18021	Indian	OW	P
UTE TRIBAL 8-10D-54	10	050S	040W	4301350488	18099	Indian	OW	P
UTE TRIBAL 7-34-55	34	050S	050W	4301350510	17949	Indian	OW	P
FEDERAL 4-4D-65	4	060S	050W	4301350521	18557	Federal	OW	P
FEDERAL 6-3D-64	3	060S	040W	4301350522	18073	Federal	OW	P
FEDERAL 1-1D-64	1	060S	040W	4301350524	18088	Federal	OW	P
FEDERAL 7-2D-65	2	060S	050W	4301350525	18100	Federal	OW	P
BERRY TRIBAL 12-34D-54	34	050S	040W	4301350527	17998	Indian	OW	P
FEDERAL 15-5D-65	5	060S	050W	4301350553	18537	Federal	OW	P
FEDERAL 11-4D-64	4	060S	040W	4301350565	18043	Federal	OW	P
FEDERAL 6-6D-65	6	060S	050W	4301350566	18521	Federal	OW	P
LC TRIBAL 3-15D-56	15	050S	060W	4301350598	18097	Indian	OW	P
LC TRIBAL 8-16D-56	16	050S	060W	4301350599	18161	Indian	OW	P
LC FEE 16-16D-56	16	050S	060W	4301350601	18165	Fee	OW	P
LC TRIBAL 10-16D-56	16	050S	060W	4301350602	18586	Indian	OW	P
LC TRIBAL 15-22D-56	22	050S	060W	4301350606	18278	Indian	OW	P
LC TRIBAL 5-23D-56	23	050S	060W	4301350625	18285	Indian	OW	P
LC TRIBAL 5-14D-56	14	050S	060W	4301350661	18219	Indian	OW	P
SFW FEE 14-10D-54	10	050S	040W	4301350686	18070	Fee	OW	P
LC FEE 1-22D-56	22	050S	060W	4301350718	18101	Fee	OW	P
FEDERAL 8-2D-65	2	060S	050W	4301350719	18614	Federal	OW	P
FEDERAL 1-2D-64	2	060S	040W	4301350730	18585	Federal	OW	P
FEDERAL 7-2D-64	2	060S	040W	4301350734	18584	Federal	OW	P
FEDERAL 10-6D-64	6	060S	040W	4301350735	18162	Federal	OW	P
FEDERAL 4-3D-64	3	060S	040W	4301350736	18621	Federal	OW	P
FEDERAL 12-3D-64	3	060S	040W	4301350737	18620	Federal	OW	P
LC TRIBAL 3-21D-56	21	050S	060W	4301350751	18462	Indian	OW	P
LC TRIBAL 5-21D-56	21	050S	060W	4301350752	18286	Indian	OW	P
FEDERAL 2-1D-65	1	060S	050W	4301350759	18172	Federal	OW	P
FEDERAL 3-1D-65	1	060S	050W	4301350760	18173	Federal	OW	P

FEDERAL 5-1D-65	1	060S	050W	4301350761	18174	Federal	OW	P	
FEDERAL 9-2D-65	2	060S	050W	4301350762	18245	Federal	OW	P	
FEDERAL 11-2D-65	2	060S	050W	4301350763	18589	Federal	OW	P	
FEDERAL 15-2D-65	2	060S	050W	4301350764	18590	Federal	OW	P	
LC TRIBAL 14-14D-56	14	050S	060W	4301350776	18287	Indian	OW	P	
LC FEE 2-20D-56	20	050S	060W	4301350777	18622	Fee	OW	P	
LC TRIBAL 12-22D-56	22	050S	060W	4301350780	18341	Indian	OW	P	
FEDERAL 3-4D-65	4	060S	050W	4301350782	18556	Federal	OW	P	
FEDERAL 6-4D-65	4	060S	050W	4301350783	19162	Federal	OW	P	
FEDERAL 12-4D-65	4	060S	050W	4301350784	19171	Federal	OW	P	
LC TRIBAL 14-15D-56	15	050S	060W	4301350834	18362	Indian	OW	P	
UTE TRIBAL 7I-21D-54	21	050S	040W	4301350852	18423	Indian	OW	P	BERRY PILOT EOR 246-02
UTE TRIBAL 8L-21D-54	21	050S	040W	4301350853	18423	Indian	OW	P	BERRY PILOT EOR 246-02
UTE TRIBAL 10S-21D-54	21	050S	040W	4301350854	18423	Indian	OW	P	BERRY PILOT EOR 246-02
UTE TRIBAL 11-11-54	11	050S	040W	4301350861	18775	Indian	OW	P	
LC TRIBAL 2-28D-56	28	050S	060W	4301350866	18592	Indian	OW	P	
LC FEE 8-28D-56	28	050S	060W	4301350867	18342	Fee	OW	P	
LC TRIBAL 6-27D-56	27	050S	060W	4301350868	18480	Indian	OW	P	
LC FEE 15-23D-56	23	050S	060W	4301350870	18410	Fee	OW	P	
LC TRIBAL 15-26-56	26	050S	060W	4301350871	18377	Indian	OW	P	
UTE TRIBAL 16-11-55	11	050S	050W	4301350888	18707	Indian	OW	P	
LC TRIBAL 2-5D-56	5	050S	060W	4301350925	18568	Indian	OW	P	
LC TRIBAL 2-9D-56	9	050S	060W	4301350926	18425	Indian	OW	P	
LC FEE 8-29-45	29	040S	050W	4301350928	18313	Fee	OW	P	
LC FEE 13-29-45	29	040S	050W	4301350929	18426	Fee	OW	P	
LC FEE 9-12D-57	12	050S	070W	4301350963	18541	Fee	OW	P	
LC FEE 1-22-57	22	050S	070W	4301350965	18558	Fee	OW	P	
LC TRIBAL 11-3D-56	3	050S	060W	4301350966	18464	Indian	OW	P	
LC TRIBAL 3-34-45	34	040S	050W	4301350976	18661	Indian	OW	P	
LC TRIBAL 9-10D-56	10	050S	060W	4301350987	18944	Indian	OW	P	
LC TRIBAL 10-9D-56	9	050S	060W	4301350990	18864	Indian	OW	P	
LC FEE 10-31D-45	31	040S	050W	4301350994	18443	Fee	OW	P	
VIEIRA TRIBAL 4-4-54	4	050S	040W	4301350997	18747	Indian	OW	P	
LC TRIBAL 10-21-56	21	050S	060W	4301350999	18439	Indian	OW	P	
FEDERAL 1-5D-64	5	060S	040W	4301351012	18720	Federal	OW	P	
FEDERAL 2-5D-64	5	060S	040W	4301351013	18723	Federal	OW	P	
FEDERAL 7-5D-64	5	060S	040W	4301351014	18722	Federal	OW	P	
FEDERAL 8-5D-64	5	060S	040W	4301351015	18721	Federal	OW	P	
MYRIN TRIBAL 15-10-55	10	050S	050W	4301351024	18771	Indian	OW	P	
LC TRIBAL 15-15D-56	15	050S	060W	4301351030	18440	Indian	OW	P	
LC TRIBAL 9-15D-56	15	050S	060W	4301351031	18441	Indian	OW	P	
LC TRIBAL 6-28-45	28	040S	050W	4301351034	18700	Indian	OW	P	
FEDERAL 1-12D-65	12	060S	050W	4301351055	18739	Federal	OW	P	
FEDERAL 8-12D-65	12	060S	050W	4301351056	18718	Federal	OW	P	
FEDERAL 2-12D-65	12	060S	050W	4301351057	18738	Federal	OW	P	
LC TRIBAL 15-8D-56	8	050S	060W	4301351060	18862	Indian	OW	P	
LC TRIBAL 8-22D-56	22	050S	060W	4301351069	19233	Indian	OW	P	
LC TRIBAL 9-17D-56	17	050S	060W	4301351070	18945	Indian	OW	P	
LC TRIBAL 7-27-45	27	040S	050W	4301351073	18685	Indian	OW	P	
LC TRIBAL 11-24-45	24	040S	050W	4301351076	18745	Indian	OW	P	
FEDERAL 3-12D-65	12	060S	050W	4301351093	18705	Federal	OW	P	
FEDERAL 4-12D-65	12	060S	050W	4301351094	18704	Federal	OW	P	
FEDERAL 5-12D-65	12	060S	050W	4301351095	18702	Federal	OW	P	
FEDERAL 6-12D-65	12	060S	050W	4301351096	18703	Federal	OW	P	
LC TRIBAL 9-8D-56	8	050S	060W	4301351112	18522	Indian	OW	P	
UTE TRIBAL 4-9-54	9	050S	040W	4301351126	19059	Indian	OW	P	
UTE TRIBAL 6-9-54	9	050S	040W	4301351127	19017	Indian	OW	P	
UTE TRIBAL 2-9-54	9	050S	040W	4301351128	18946	Indian	OW	P	
UTE TRIBAL 1-10-54	10	050S	040W	4301351129	18879	Indian	OW	P	
LC TRIBAL 8-30D-56	30	050S	060W	4301351131	18539	Indian	OW	P	
LC TRIBAL 16-30D-56	30	050S	060W	4301351132	18540	Indian	OW	P	
FEDERAL 1-1D-65	1	060S	050W	4301351142	18623	Federal	OW	P	
UTE TRIBAL 8-9-54	9	050S	040W	4301351143	18947	Indian	OW	P	
FEDERAL 15-1D-65	1	060S	050W	4301351175	18654	Federal	OW	P	
FEDERAL 16-1D-65	1	060S	050W	4301351176	18655	Federal	OW	P	
LC TRIBAL 11-29D-56	29	050S	060W	4301351183	18873	Indian	OW	P	

STATE TRIBAL 8-12-55	12	050S	050W	4301351188	18986	Indian	OW	P	
LC TRIBAL 11-20D-56	20	050S	060W	4301351189	18819	Indian	OW	P	
LC FEE 5-20D-56	20	050S	060W	4301351190	18818	Fee	OW	P	
LC FEE 9-19-56	19	050S	060W	4301351192	18596	Fee	OW	P	
LC TRIBAL 9-9D-56	9	050S	060W	4301351198	18595	Indian	OW	P	
FEDERAL 16-6-64	6	060S	040W	4301351217	18792	Federal	OW	P	
FEDERAL 9-6D-64	6	060S	040W	4301351218	18791	Federal	OW	P	
UTE TRIBAL 5-17-55	17	050S	050W	4301351220	18841	Indian	OW	P	
UTE TRIBAL 16-3-54	3	050S	040W	4301351226	18664	Indian	OW	P	
STATE TRIBAL 15-6-54	6	050S	040W	4301351227	18746	Indian	OW	P	
STATE TRIBAL 8-7-54	7	050S	040W	4301351228	18743	Indian	OW	P	
STATE TRIBAL 12-1-55	1	050S	050W	4301351229	18741	Indian	OW	P	
STATE TRIBAL 11-2-55	2	050S	050W	4301351230	18742	Indian	OW	P	
FEDERAL 1-11-65	11	060S	050W	4301351231	18689	Federal	OW	P	
FEDERAL 8-11D-65	11	060S	050W	4301351232	18688	Federal	OW	P	
FEDERAL 2-11D-65	11	060S	050W	4301351233	18690	Federal	OW	P	
STATE TRIBAL 12-3-55	3	050S	050W	4301351236	18744	Indian	OW	P	
UTE TRIBAL 11-4-55	4	050S	050W	4301351237	18663	Indian	OW	P	
UTE TRIBAL 4-9-55	9	050S	050W	4301351238	18796	Indian	OW	P	
UTE TRIBAL 15-5-55	5	050S	050W	4301351239	18740	Indian	OW	P	
UTE FEE 9-9-54	9	050S	040W	4301351259	18642	Fee	OW	P	
LC TRIBAL 4-29-45	29	040S	050W	4301351260	18719	Indian	OW	P	
UTE FEE 14-9D-54	9	050S	040W	4301351271	18684	Fee	OW	P	
UTE FEE 15-9D-54	9	050S	040W	4301351272	18687	Fee	OW	P	
LC FEE 10-28D-56	28	050S	060W	4301351288	18591	Fee	OW	P	
UTE TRIBAL 8-16D-54	16	050S	040W	4301351295	19003	Indian	OW	P	
FEE TRIBAL 4-5-54	5	050S	040W	4301351303	19187	Indian	OW	P	
LC TRIBAL 1-26-56	26	050S	060W	4301351306	18816	Indian	OW	P	
UTE TRIBAL 6-16D-54	16	050S	040W	4301351307	19060	Indian	OW	P	
LC TRIBAL 7-22D-56	22	050S	060W	4301351308	18795	Indian	OW	P	
LC TRIBAL 9-22D-56	22	050S	060W	4301351309	18794	Indian	OW	P	
LC TRIBAL 9-32D-56	32	050S	060W	4301351316	19228	Indian	OW	P	
LC TRIBAL 7-26D-56	26	050S	060W	4301351319	18817	Indian	OW	P	
LC FEE 8-6D-56	6	050S	060W	4301351342	18657	Fee	OW	P	
LC FEE 10-29D-45	29	040S	050W	4301351343	18850	Fee	OW	P	
LC TRIBAL 1-7D-56	7	050S	060W	4301351344	18774	Indian	OW	P	
LC TRIBAL 9-7D-56	7	050S	060W	4301351346	18773	Indian	OW	P	
LC TRIBAL 11-10D-56	10	050S	060W	4301351369	18840	Indian	OW	P	
LC FEE 1-31D-45	31	040S	050W	4301351371	18686	Fee	OW	P	
LC TRIBAL 14-21D-56	21	050S	060W	4301351384	18877	Indian	OW	P	
LC TRIBAL 4-22D-56	22	050S	060W	4301351385	18878	Indian	OW	P	
LC TRIBAL 8-21D-56	21	050S	060W	4301351392	18874	Indian	OW	P	
UTE TRIBAL 1-17-55	17	050S	050W	4301351393	18848	Indian	OW	P	
LC TRIBAL 4-33D-45	33	040S	050W	4301351401	18853	Indian	OW	P	
LC TRIBAL 16-21D-56	21	050S	060W	4301351407	18875	Indian	OW	P	
UTE TRIBAL 2-10D-54	10	050S	040W	4301351411	19172	Indian	OW	P	
UTE TRIBAL 4-10D-54	10	050S	040W	4301351414	19069	Indian	OW	P	
LC TRIBAL 2-21D-56	16	050S	060W	4301351418	19252	Indian	OW	P	
LC TRIBAL 1-23D-45	23	040S	050W	4301351425	18855	Indian	OW	P	
LC TRIBAL 2-28D-45	28	040S	050W	4301351429	18701	Indian	OW	P	
LC TRIBAL 9-28D-45	28	040S	050W	4301351430	18656	Indian	OW	P	
LC TRIBAL 1-29-56	29	050S	060W	4301351442	18876	Indian	OW	P	
LC FEE 1-1-56	1	050S	060W	4301351458	18829	Fee	OW	P	
LC Tribal 12-32-45	32	040S	050W	4301351465	18772	Indian	OW	P	
UTE TRIBAL 2-5-54	5	050S	040W	4301351520	18880	Indian	OW	P	
LC Tribal 3-32D-45	32	040S	050W	4301351561	18842	Indian	OW	P	
LC TRIBAL 5-15D-56	15	050S	060W	4301351562	19253	Indian	OW	P	
LC FEE 16-36-56	36	050S	060W	4301351611	19096	Fee	OW	P	
LC TRIBAL 15-34-56	34	050S	060W	4301351647	18962	Indian	OW	P	
LC TRIBAL 1-34D-56	34	050S	060W	4301351660	18988	Indian	OW	P	
LC FEE 13-23-56	23	050S	060W	4301351706	18994	Fee	OW	P	
LC FEE 11-23D-56	23	050S	060W	4301351707	18995	Fee	OW	P	
LC TRIBAL 3-33-56	33	050S	060W	4301351711	19242	Indian	OW	P	
LC FEE 11-29D-45	29	040S	050W	4301351743	19188	Fee	OW	P	
LC FEE 4-28D-45	29	040S	050W	4301351745	18849	Fee	OW	P	
CC Fee 7R-28-38	28	030S	080W	4301351852	18863	Fee	OW	P	

FEDERAL 6-7-64	7	060S	040W	4301351915	19117	Federal	OW	P	
FEDERAL 3-7D-64	7	060S	040W	4301351916	19115	Federal	OW	P	
FEDERAL 4-7D-64	7	060S	040W	4301351917	19110	Federal	OW	P	
FEDERAL 5-7D-64	7	060S	040W	4301351918	19111	Federal	OW	P	
FEDERAL 2-7-64	7	060S	040W	4301351919	19139	Federal	OW	P	
FEDERAL 1-7D-64	7	060S	040W	4301351920	19140	Federal	OW	P	
FEDERAL 12-7D-64	7	060S	040W	4301351924	19025	Federal	OW	P	
FEDERAL 11-7D-64	7	060S	040W	4301351925	19039	Federal	OW	P	
FEDERAL 13-7D-64	7	060S	040W	4301351926	19026	Federal	OW	P	
FEDERAL 14-7D-64	7	060S	040W	4301351927	19040	Federal	OW	P	
FEDERAL 7-7D-64	7	060S	040W	4301351933	19141	Federal	OW	P	
FEDERAL 8-7D-64	7	060S	040W	4301351934	19142	Federal	OW	P	
FEDERAL 9-7D-64	7	060S	040W	4301351935	19143	Federal	OW	P	
FEDERAL 10-7D-64	7	060S	040W	4301351936	19144	Federal	OW	P	
ABBOTT FEE 2-6D-54	6	050S	040W	4301351949	18974	Fee	OW	P	
ABBOTT FEE 8-6D-54	6	050S	040W	4301351950	18964	Fee	OW	P	
ABBOTT FEE 4-6-54	6	050S	040W	4301351952	18965	Fee	OW	P	
Federal 15-12D-65	12	060S	050W	4301351992	19051	Federal	OW	P	
Federal 10-12D-65	12	060S	050W	4301351999	19052	Federal	OW	P	
Federal 9-12D-65	12	060S	050W	4301352000	19053	Federal	OW	P	
Federal 16-12D-65	12	060S	050W	4301352003	19054	Federal	OW	P	
Federal 1-6D-65	6	060S	050W	4301352012	19189	Federal	OW	P	
Federal 3-6D-65	6	060S	050W	4301352014	19190	Federal	OW	P	
Federal 2-6-65	6	060S	050W	4301352017	19191	Federal	OW	P	
Federal 7-6D-65	6	060S	050W	4301352018	19192	Federal	OW	P	
Federal 16-11D-65	11	060S	050W	4301352045	19070	Federal	OW	P	
Federal 15-11D-65	11	060S	050W	4301352046	19076	Federal	OW	P	
Federal 10-11D-65	11	060S	050W	4301352047	19077	Federal	OW	P	
Federal 9-11D-65	11	060S	050W	4301352048	19071	Federal	OW	P	
Federal 11-12D-65	12	060S	050W	4301352049	19121	Federal	OW	P	
Federal 12-12D-65	12	060S	050W	4301352050	19122	Federal	OW	P	
Federal 13-12D-65	12	060S	050W	4301352052	19123	Federal	OW	P	
Federal 14-12D-65	12	060S	050W	4301352053	19124	Federal	OW	P	
LC Tribal 12-28D-45	28	040S	050W	4301352089	19378	Indian	OW	P	
LC Tribal 2-32D-45	32	040S	050W	4301352113	19348	Indian	OW	P	
LC Tribal 16-29D-45	32	040S	050W	4301352114	19349	Indian	OW	P	
Vieira Tribal 3-4D-54	4	050S	040W	4301352145	19210	Indian	OW	P	
Vieira Tribal 5-4D-54	4	050S	040W	4301352146	19193	Indian	OW	P	
Vieira Tribal 6-4D-54	4	050S	040W	4301352147	19216	Indian	OW	P	
Lamplugh Tribal 6-3D-54	3	050S	040W	4301352148	19289	Indian	OW	P	
Lamplugh Tribal 5-3D-54	3	050S	040W	4301352149	19290	Indian	GW	P	
Lamplugh Tribal 4-3D-54	3	050S	040W	4301352150	19291	Indian	OW	P	
Lamplugh Tribal 3-3D-54	3	050S	040W	4301352151	19292	Indian	OW	P	
UTE Tribal 6-35D-54	35	050S	040W	4301352158	19254	Indian	GW	P	
UTE Tribal 4-35D-54	35	050S	040W	4301352159	19255	Indian	GW	P	
Heiner Tribal 3-11D-54	11	050S	040W	4301352165	19194	Indian	OW	P	
Heiner Tribal 4-11-54	11	050S	040W	4301352166	19195	Indian	OW	P	
Heiner Tribal 5-11D-54	11	050S	040W	4301352167	19196	Indian	OW	P	
Conolly Tribal 1-11D-54	11	050S	040W	4301352168	19270	Indian	OW	P	
Conolly Tribal 2-11D-54	11	050S	040W	4301352169	19197	Indian	OW	P	
Conolly Tribal 7-11D-54	11	050S	040W	4301352170	19280	Indian	OW	P	
Conolly Tribal 8-11D-54	11	050S	040W	4301352171	19281	Indian	OW	P	
Casper Tribal 1-5D-54	5	050S	040W	4301352180	19198	Indian	OW	P	
Fee Tribal 6-5D-54	5	050S	040W	4301352181	19199	Indian	OW	P	
Fee Tribal 5-5D-54	5	050S	040W	4301352182	19200	Indian	OW	P	
Fee Tribal 3-5D-54	5	050S	040W	4301352184	19201	Indian	OW	P	
Casper Tribal 7-5D-54	5	050S	040W	4301352185	19202	Indian	OW	P	
UTE Tribal 10-35D-54	35	050S	040W	4301352198	19320	Indian	OW	P	
UTE Tribal 14-35D-54	35	050S	040W	4301352199	19311	Indian	GW	P	
UTE Tribal 12-35D-54	35	050S	040W	4301352200	19312	Indian	OW	P	
UTE Tribal 16-35D-54	35	050S	040W	4301352230	19321	Indian	OW	P	
Evans Tribal 1-3-54	3	050S	040W	4301352234	19264	Indian	OW	P	
Evans Tribal 2-3D-54	3	050S	040W	4301352235	19265	Indian	OW	P	
Evans Tribal 7-3D-54	3	050S	040W	4301352236	19256	Indian	OW	P	
Evans Tribal 8-3D-54	3	050S	040W	4301352237	19257	Indian	OW	P	
Ute Tribal 9-3D-54	3	050S	040W	4301352249	19236	Indian	OW	P	

Ute Tribal 15-3D-54	3	050S	040W	4301352250	19237	Indian	OW	P	
Ute Tribal 10-3-54	3	050S	040W	4301352251	19238	Indian	OW	P	
Ute Tribal 14-3D-54	3	050S	040W	4301352298	19258	Indian	OW	P	
Ute Tribal 12-3D-54	3	050S	040W	4301352299	19259	Indian	OW	P	
Ute Tribal 11-3D-54	3	050S	040W	4301352300	19260	Indian	OW	P	
Ute Tribal 16-4D-54	4	050S	040W	4301352302	19350	Indian	OW	P	
Ute Tribal 15-4D-54	4	050S	040W	4301352303	19293	Indian	OW	P	
Ute Tribal 9-4D-54	4	050S	040W	4301352305	19304	Indian	OW	P	
Ute Tribal 10-4D-54	4	050S	040W	4301352307	19294	Indian	OW	P	
UTE Tribal 2-35D-54	35	050S	040W	4301352319	19322	Indian	OW	P	
UTE Tribal 8-35D-54	35	050S	040W	4301352320	19323	Indian	OW	P	
Abbott Fee 5-6D-54	6	050S	040W	4301352326	19351	Fee	OW	P	
Ute Tribal 6-11D-54	11	050S	040W	4301352330	19243	Indian	OW	P	
Ute Tribal 12-11D-54	11	050S	040W	4301352331	19244	Indian	OW	P	
Ute Tribal 14-11D-54	11	050S	040W	4301352332	19245	Indian	OW	P	
Ute Tribal 11-4D-54	4	050S	040W	4301352343	19305	Indian	OW	P	
Ute Tribal 12-4D-54	4	050S	040W	4301352344	19352	Indian	OW	P	
Ute Tribal 13-4D-54	4	050S	040W	4301352345	19353	Indian	OW	P	
Ute Tribal 14-4D-54	4	050S	040W	4301352346	19306	Indian	OW	P	
Ute Tribal 16-5D-54	5	050S	040W	4301352545	99999	Indian	OW	P	
Ute Tribal 15-5D-54	5	050S	040W	4301352546	99999	Indian	OW	P	
Ute Tribal 10-5D-54	5	050S	040W	4301352547	99999	Indian	OW	P	
Ute Tribal 8-5D-54	5	050S	040W	4301352548	99999	Indian	OW	P	
SCOFIELD-THORPE 26-31	26	120S	070E	4300730987	15218	Fee	D	PA	
SCOFIELD-THORPE 26-43	26	120S	070E	4300730990	14922	Fee	D	PA	
SCOFIELD CHRISTIANSEN 8-23	8	120S	070E	4300730999	15172	Fee	D	PA	
CC FEE 7-28-38	28	030S	080W	4301350887	18288	Fee	D	PA	
CC FEE 8-9-37	9	030S	070W	4301350896	18660	Fee	D	PA	
ST LOST CREEK 32-44	32	110S	070E	4304930023	14450	State	D	PA	
SCOFIELD THORPE 22-41X RIG SKID	22	120S	070E	4300730890	13719	Fee	GW	S	
SCOFIELD-THORPE 35-13	35	120S	070E	4300730991	14846	Fee	GW	S	
SCOFIELD-THORPE 23-31	23	120S	070E	4300731001	14923	Fee	GW	S	
NUTTERS RIDGE FED 5-1	5	060S	040W	4301330403	8231	Federal	OW	S	
WIRE FENCE CYN FED 15-1	15	060S	050W	4301330404	8233	Federal	GW	S	
R FORK ANTELOPE CYN FED 25-1	25	060S	050W	4301330406	8234	Federal	OW	S	
WOLF HOLLOW 22-1	22	060S	050W	4301330425	10370	Federal	GW	S	
ANTELOPE RIDGE 24-1	24	060S	050W	4301330426	10371	Federal	OW	S	
B C UTE TRIBAL 8-21	21	050S	040W	4301330829	8414	Indian	OW	S	BERRY PILOT EOR 246-02
Z and T UTE TRIBAL 10-21	21	050S	040W	4301331283	11133	Indian	GW	S	BERRY PILOT EOR 246-02
Z and T UTE TRIBAL 12-22	22	050S	040W	4301331311	11421	Indian	OW	S	
UTE TRIBAL 15-17	17	050S	040W	4301331649	11956	Indian	OW	S	
UTE TRIBAL 7-30	30	050S	040W	4301332167	12945	Indian	OW	S	
UTE TRIBAL 8-35-55	35	050S	050W	4301332267	13571	Indian	OW	S	
UTE TRIBAL 10-16-55	16	050S	050W	4301332345	13693	Indian	OW	S	
FOY TRIBAL 11-34-55	34	050S	050W	4301332351	13648	Indian	OW	S	
UTE TRIBAL 13-30-54	30	050S	040W	4301332409	13968	Indian	OW	S	
UTE TRIBAL 3-33-54	33	050S	040W	4301332412	13938	Indian	OW	S	
UTE TRIBAL 1-20-55	20	050S	050W	4301332414	14548	Indian	OW	S	
UTE TRIBAL 11-30-54	30	050S	040W	4301332512	13982	Indian	OW	S	
UTE TRIBAL 2-24-54	24	050S	040W	4301332569	14314	Indian	OW	S	
UTE TRIBAL 10-14-55	14	050S	050W	4301332601	14331	Indian	OW	S	
MOON TRIBAL 3-27-54	27	050S	040W	4301332613	14416	Indian	OW	S	
UTE TRIBAL 7-21-54	21	050S	040W	4301332623	14383	Indian	OW	S	BERRY PILOT EOR 246-02
UTE TRIBAL 16-24-55	24	050S	050W	4301332672	14384	Indian	GW	S	
UTE TRIBAL 7-35-54	35	050S	040W	4301332774	15019	Indian	OW	S	
UTE TRIBAL 16-25-54	25	050S	040W	4301332779	15078	Indian	OW	S	
MOON TRIBAL 13-27-54	27	050S	040W	4301332801	15057	Indian	OW	S	
UTE TRIBAL 15-15-55	15	050S	050W	4301332855	15114	Indian	OW	S	
UTE TRIBAL 5-36-55	36	050S	050W	4301332930	15301	Indian	OW	S	
UTE TRIBAL 8-24-54	24	050S	040W	4301332933	15402	Indian	OW	S	
UTE TRIBAL 12-15-55	15	050S	050W	4301332981	15348	Indian	OW	S	
UTE TRIBAL 9-21-54	21	050S	040W	4301333040	15360	Indian	OW	S	BERRY PILOT EOR 246-02
UTE TRIBAL 15-21-54	21	050S	040W	4301333114	15441	Indian	OW	S	BERRY PILOT EOR 246-02
UTE TRIBAL 10-16-54	16	050S	040W	4301333129	15454	Indian	OW	S	
TAYLOR FEE 7-14-56	14	050S	060W	4301333140	15601	Fee	OW	S	
UTE TRIBAL 9S-25-55	25	050S	050W	4301333245	15962	Indian	OW	S	

UTE TRIBAL 9-5-54	5	050S	040W	4301351111	18909	Indian	OW	S	
ABBOTT FEE 6-6-54	6	050S	040W	4301351948	18963	Fee	OW	S	

Division of Oil, Gas and Mining
Operator Change/Name Change Worksheet-for State use only

Effective Date: 3/1/2017

FORMER OPERATOR:	NEW OPERATOR:
Linn Operating, Inc. 600 Travis Street, Suite 140 Houston, TX 77002	Linn Operating, LLC 600 Travis Street, Suite 140 Houston, TX 77002
CA Number(s):	Unit(s): Bradford Canyon Berry Pilot EOR 246-02 Brundage Canyon

WELL INFORMATION:

Well Name	Sec	TWN	RNG	API	Entity	Mineral	Surface	Type	Status
See Attached List									

OPERATOR CHANGES DOCUMENTATION:

1. Sundry or legal documentation was received from the **FORMER** operator on: 4/11/2017
2. Sundry or legal documentation was received from the **NEW** operator on: 4/11/2017
3. New operator Division of Corporations Business Number: 9031632-0161

REVIEW:

1. Surface Agreement Sundry from **NEW** operator on Fee Surface wells received on: 4/11/2017
2. Receipt of Acceptance of Drilling Procedures for APD on: 4/11/2017
3. Reports current for Production/Disposition & Sundries: 6/13/2017
4. OPS/SI/TA well(s) reviewed for full cost bonding: 6/13/2017
5. UIC5 on all disposal/injection/storage well(s) approved on: Per DJJ, not required
6. Surface Facility(s) included in operator change: See Attached List
7. Inspections of PA state/fee well sites complete on (only upon operators request): 6/13/2017

NEW OPERATOR BOND VERIFICATION:

1. Federal well(s) covered by Bond Number: LPM8898781
2. Indian well(s) covered by Bond Number: LPM9149926
3. State/fee well(s) covered by Bond Number(s): K0915367-Blanket
   K09515434
   K09515409
   K09515392
   K09622597
   K09622615
   K09622603
   K09622627

DATA ENTRY:

1. Well(s) moved in RBDMS on: 6/14/2017
2. Entity Number(s) updated in **RBDMS** on: 6/14/2017
3. Unit(s) update in **RBDMS** on: 6/14/2017
4. Surface Facilities moved in RBDMS on: 6/14/2017
5. State/Fee well(s) attached to bond(s) in **RBDMS** on: 6/14/2017
6. Surface Facilities attached to bond(s) in **RBDMS** on: 6/14/2017

COMMENTS:

Well Transfer
From: Linn Operating, Inc.
To: Linn Operation, LLC
Effective: 3/1/2017

Well Name	Sec	Town	Twp Dir	Range	Rng Dir	API	Entity Number	Well Type	Well Status
SWD 4-11A2	11	1	S	2	W	4301320255	99990	Water Disposal Well	Active
VIRGIL MECHAM 1-11A2	11	1	S	2	W	4301330009	5760	Water Disposal Well	Active
1-3A2	3	1	S	2	W	4301330021	99990	Water Disposal Well	Active
BLUEBELL 2-28A2	28	1	S	2	W	4301330346	99990	Water Disposal Well	Active
SALERATUS 2-17C5	17	3	S	5	W	4301330388	99990	Water Disposal Well	Active
CENTRAL BLUEBELL 2-26A2	26	1	S	2	W	4301330389	99990	Water Disposal Well	Active
Z and T UTE TRIBAL 2-21	21	5	S	4	W	4301331280	11130	Water Injection Well	Active
Z and T UTE TRIBAL 10-21	21	5	S	4	W	4301331283	11133	Water Injection Well	Active
UTE TRIBAL 16-21-54	21	5	S	4	W	4301332381	13912	Water Injection Well	Active
UTE TRIBAL 7-21-54	21	5	S	4	W	4301332623	14383	Water Injection Well	Active
UTE TRIBAL 12-30-54	30	5	S	4	W	4301332747	14747	Water Injection Well	Active
UTE TRIBAL 14-30-54	30	5	S	4	W	4301332748	14778	Water Injection Well	Active
UTE TRIBAL 10-30D-54	30	5	S	4	W	4301332893	15246	Water Injection Well	Active
UTE TRIBAL 6-30-54	30	5	S	4	W	4301332975	15300	Water Injection Well	Active
UTE TRIBAL 9-21-54	21	5	S	4	W	4301333040	15360	Water Injection Well	Active
UTE TRIBAL 15-21-54	21	5	S	4	W	4301333114	15441	Water Injection Well	Active
UTE TRIBAL 1-21-54	21	5	S	4	W	4301333388	15937	Water Injection Well	Active
BALLARD 2-15B1	15	2	S	1	W	4304732351	11476	Water Disposal Well	Active
UTE TRIBAL 15-28D-55	28	5	S	5	W	4301333623		Oil Well	Approved Permit
LC TRIBAL 13H-9-56	10	5	S	6	W	4301350874		Oil Well	Approved Permit
LC TRIBAL 4H-26-56	26	5	S	6	W	4301350951		Oil Well	Approved Permit
LC TRIBAL 5H-34-45	34	4	S	5	W	4301350974		Oil Well	Approved Permit
LC TRIBAL 11-34-45	34	4	S	5	W	4301350975		Oil Well	Approved Permit
CC TRIBAL 4-30D-38	19	3	S	8	W	4301350993		Oil Well	Approved Permit
FEDERAL 4-1-65	1	6	S	5	W	4301351016		Oil Well	Approved Permit
LC TRIBAL 13H-28-45	28	4	S	5	W	4301351061		Oil Well	Approved Permit
LC TRIBAL 5H-23-45	23	4	S	5	W	4301351071		Oil Well	Approved Permit
LC TRIBAL 4H-27-45	27	4	S	5	W	4301351072		Oil Well	Approved Permit
LC TRIBAL 16-27-45	27	4	S	5	W	4301351074		Oil Well	Approved Permit
LC TRIBAL 12-27-45	27	4	S	5	W	4301351075		Oil Well	Approved Permit
LC TRIBAL 16-23-45	23	4	S	5	W	4301351077		Oil Well	Approved Permit
LC TRIBAL 12H-30-56	30	5	S	6	W	4301351133		Oil Well	Approved Permit
LC TRIBAL 5H-33-45	33	4	S	5	W	4301351338		Oil Well	Approved Permit
LC TRIBAL 6-16D-56	16	5	S	6	W	4301351406		Oil Well	Approved Permit
LC TRIBAL 3-14D-56	14	5	S	6	W	4301351408		Oil Well	Approved Permit
LC TRIBAL 13-6D-57	6	5	S	7	W	4301351417		Oil Well	Approved Permit
LC TRIBAL 9-23-45	23	4	S	5	W	4301351432		Oil Well	Approved Permit
LC TRIBAL 5-28D-56	29	5	S	6	W	4301351441		Oil Well	Approved Permit
LC TRIBAL 15-20D-56	29	5	S	6	W	4301351443		Oil Well	Approved Permit
LC Tribal 16-33-45	33	4	S	5	W	4301351463		Oil Well	Approved Permit
LC TRIBAL 7-23D-56	23	5	S	6	W	4301351479		Oil Well	Approved Permit
LC TRIBAL 4-7-56	7	5	S	6	W	4301351482		Oil Well	Approved Permit
LC TRIBAL 3-2-56	2	5	S	6	W	4301351483		Oil Well	Approved Permit
CC TRIBAL 15-34D-38	2	4	S	8	W	4301351490		Oil Well	Approved Permit

Well Transfer
From: Linn Operating, Inc.
To: Linn Operation, LLC
Effective: 3/1/2017

CC TRIBAL 14-35D-38	2	4	S	8	W	4301351491		Oil Well	Approved Permit
CC TRIBAL 8-3D-48	2	4	S	8	W	4301351493		Oil Well	Approved Permit
LC TRIBAL 1-10D-56	10	5	S	6	W	4301351510		Oil Well	Approved Permit
LC TRIBAL 3-10D-56	10	5	S	6	W	4301351511		Oil Well	Approved Permit
LC TRIBAL 7-10D-56	10	5	S	6	W	4301351512		Oil Well	Approved Permit
LC TRIBAL 9-29D-56	29	5	S	6	W	4301351513		Oil Well	Approved Permit
UTE TRIBAL 1-16-55	16	5	S	5	W	4301351519		Oil Well	Approved Permit
LC TRIBAL 1-17-56	17	5	S	6	W	4301351704		Oil Well	Approved Permit
LC Tribal 4HW-8-56	8	5	S	6	W	4301351710		Oil Well	Approved Permit
LC TRIBAL 3-11D-56	11	5	S	6	W	4301351713		Oil Well	Approved Permit
LC TRIBAL 7-11D-56	11	5	S	6	W	4301351714		Oil Well	Approved Permit
LC TRIBAL 9-34D-45	34	4	S	5	W	4301351717		Oil Well	Approved Permit
LC TRIBAL 4-34D-45	34	4	S	5	W	4301351723		Oil Well	Approved Permit
LC TRIBAL 7-34D-45	34	4	S	5	W	4301351724		Oil Well	Approved Permit
LC TRIBAL 13-34D-45	34	4	S	5	W	4301351747		Oil Well	Approved Permit
LC TRIBAL 12-31D-56	31	5	S	6	W	4301351799		Oil Well	Approved Permit
LC TRIBAL 8-20D-56	20	5	S	6	W	4301351800		Oil Well	Approved Permit
LC TRIBAL 6-31D-56	31	5	S	6	W	4301351801		Oil Well	Approved Permit
LC Tribal 11-7D-57	7	5	S	7	W	4301351814		Oil Well	Approved Permit
LC Tribal 5-7D-57	7	5	S	7	W	4301351815		Oil Well	Approved Permit
LC Tribal 11-6D-57	6	5	S	7	W	4301351817		Oil Well	Approved Permit
LC Tribal 8-33-45	33	4	S	5	W	4301351859		Oil Well	Approved Permit
LC Tribal 7-23D-45	23	4	S	5	W	4301351865		Oil Well	Approved Permit
LC Tribal 1-23D-56	23	5	S	6	W	4301351866		Oil Well	Approved Permit
LC TRIBAL 1-19-56	19	5	S	6	W	4301351867		Oil Well	Approved Permit
LC TRIBAL 7-19D-56	19	5	S	6	W	4301351868		Oil Well	Approved Permit
LC TRIBAL 9-4D-56	4	5	S	6	W	4301351869		Oil Well	Approved Permit
LC Tribal 14-32D-45	32	4	S	5	W	4301351879		Oil Well	Approved Permit
LC TRIBAL 7-17D-56	17	5	S	6	W	4301351886		Oil Well	Approved Permit
LC TRIBAL 5-17D-56	17	5	S	6	W	4301351887		Oil Well	Approved Permit
LC TRIBAL 9-2D-56	2	5	S	6	W	4301351893		Oil Well	Approved Permit
LC TRIBAL 1-2D-56	2	5	S	6	W	4301351894		Oil Well	Approved Permit
LC Tribal 15-23D-45	23	4	S	5	W	4301351895		Oil Well	Approved Permit
LC TRIBAL 11-34D-56	34	5	S	6	W	4301351900		Oil Well	Approved Permit
LC TRIBAL 9-5D-56	4	5	S	6	W	4301351901		Oil Well	Approved Permit
LC Tribal 10-28D-45	28	4	S	5	W	4301351903		Oil Well	Approved Permit
LC TRIBAL 13-20D-56	20	5	S	6	W	4301351904		Oil Well	Approved Permit
Ute Tribal 14-17-55	17	5	S	5	W	4301351908		Oil Well	Approved Permit
Federal 14-7D-65	31	5	S	6	W	4301351910		Oil Well	Approved Permit
LC Tribal 3-27D-45	27	4	S	5	W	4301351911		Oil Well	Approved Permit
LC TRIBAL 9-34D-56	34	5	S	6	W	4301351914		Oil Well	Approved Permit
LC Tribal 10-33D-45	33	4	S	5	W	4301351939		Oil Well	Approved Permit
LC Tribal 14-33D-45	33	4	S	5	W	4301351940		Oil Well	Approved Permit
LC Tribal 10-27D-45	27	4	S	5	W	4301351941		Oil Well	Approved Permit
LC Tribal 14-27D-45	27	4	S	5	W	4301351951		Oil Well	Approved Permit

Well Transfer
From: Linn Operating, Inc.
To: Linn Operation, LLC
Effective: 3/1/2017

LC Tribal 6-33D-45	33	4	S	5	W	4301351955		Oil Well	Approved Permit
LC Tribal 6-32D-45	32	4	S	5	W	4301351956		Oil Well	Approved Permit
Federal 3-11D-65	11	6	S	5	W	4301351982		Oil Well	Approved Permit
Federal 2-4-64	4	6	S	4	W	4301351983		Oil Well	Approved Permit
Federal 5-11D-65	11	6	S	5	W	4301351984		Oil Well	Approved Permit
Federal 7-4D-64	4	6	S	4	W	4301351985		Oil Well	Approved Permit
Federal 3-4D-64	4	6	S	4	W	4301351986		Oil Well	Approved Permit
Federal 8-4D-64	4	6	S	4	W	4301351988		Oil Well	Approved Permit
Federal 6-4D-64	4	6	S	4	W	4301351989		Oil Well	Approved Permit
Federal 4-4D-64	4	6	S	4	W	4301351991		Oil Well	Approved Permit
Federal 9-4D-64	4	6	S	4	W	4301352004		Oil Well	Approved Permit
Federal 10-4D-64	4	6	S	4	W	4301352011		Oil Well	Approved Permit
Federal 1-4D-64	4	6	S	4	W	4301352025		Oil Well	Approved Permit
Federal 16-4D-64	4	6	S	4	W	4301352026		Oil Well	Approved Permit
LC Tribal 10-23D-45	23	4	S	5	W	4301352029		Oil Well	Approved Permit
Federal 15-4D-64	4	6	S	4	W	4301352032		Oil Well	Approved Permit
Federal 9-9D-64	9	6	S	4	W	4301352036		Oil Well	Approved Permit
Federal 10-9D-64	9	6	S	4	W	4301352041		Oil Well	Approved Permit
Federal 15-9D-64	9	6	S	4	W	4301352043		Oil Well	Approved Permit
Federal 16-9D-64	9	6	S	4	W	4301352044		Oil Well	Approved Permit
LC Tribal 10-32D-45	32	4	S	5	W	4301352065		Oil Well	Approved Permit
LC Tribal 16-28D-45	28	4	S	5	W	4301352073		Oil Well	Approved Permit
LC Tribal 15-24D-45	24	4	S	5	W	4301352074		Oil Well	Approved Permit
LC Tribal 13-17D-56	17	5	S	6	W	4301352076		Oil Well	Approved Permit
LC Tribal 15-17D-56	17	5	S	6	W	4301352077		Oil Well	Approved Permit
LC Tribal 5-26D-56	26	5	S	6	W	4301352097		Oil Well	Approved Permit
LC Tribal 11-26D-56	26	5	S	6	W	4301352098		Oil Well	Approved Permit
LC Tribal 4-9D-56	9	5	S	6	W	4301352102		Oil Well	Approved Permit
LC Tribal 8-32D-45	32	4	S	5	W	4301352135		Oil Well	Approved Permit
UTE Tribal 15-24D-54	24	5	S	4	W	4301352156		Gas Well	Approved Permit
UTE Tribal 9-24D-54	24	5	S	4	W	4301352157		Gas Well	Approved Permit
UTE Tribal 1-25D-54	25	5	S	4	W	4301352173		Gas Well	Approved Permit
UTE Tribal 9-25D-54	25	5	S	4	W	4301352177		Gas Well	Approved Permit
Myrin Tribal 9-10D-55	10	5	S	5	W	4301352189		Oil Well	Approved Permit
Myrin Tribal 16-10D-55	10	5	S	5	W	4301352190		Oil Well	Approved Permit
Myrin Tribal 10-10D-55	10	5	S	5	W	4301352191		Oil Well	Approved Permit
UTE Tribal 1-24D-54	24	5	S	4	W	4301352304		Gas Well	Approved Permit
UTE Tribal 7-24D-54	24	5	S	4	W	4301352306		Gas Well	Approved Permit
UTE Tribal 12-25D-54	25	5	S	4	W	4301352308		Gas Well	Approved Permit
UTE Tribal 4-13D-54	13	5	S	4	W	4301352321		Gas Well	Approved Permit
UTE Tribal 13-25D-54	25	5	S	4	W	4301352322		Gas Well	Approved Permit
UTE Tribal 3-24D-54	24	5	S	4	W	4301352347		Gas Well	Approved Permit
UTE Tribal 5-24D-54	24	5	S	4	W	4301352348		Gas Well	Approved Permit
State Tribal 14-1D-55	1	5	S	5	W	4301352372		Oil Well	Approved Permit
State Tribal 11-1D-55	1	5	S	5	W	4301352373		Oil Well	Approved Permit

Well Transfer
From: Linn Operating, Inc.
To: Linn Operation, LLC
Effective: 3/1/2017

State Tribal 13-1D-55	1	5	S	5	W	4301352374		Oil Well	Approved Permit
State Tribal 12-2D-55	2	5	S	5	W	4301352391		Oil Well	Approved Permit
State Tribal 14-2D-55	2	5	S	5	W	4301352392		Oil Well	Approved Permit
State Tribal 13-2D-55	2	5	S	5	W	4301352393		Oil Well	Approved Permit
State Tribal 14-3D-55	3	5	S	5	W	4301352430		Oil Well	Approved Permit
State Tribal 11-3D-55	3	5	S	5	W	4301352434		Oil Well	Approved Permit
State Tribal 13-3D-55	3	5	S	5	W	4301352435		Oil Well	Approved Permit
UTE TRIBAL 2-5D-55	5	5	S	5	W	4301352450		Oil Well	Approved Permit
Ute Tribal 1-5D-55	5	5	S	5	W	4301352456		Oil Well	Approved Permit
Ute Tribal 7-5-55	5	5	S	5	W	4301352459		Oil Well	Approved Permit
Ute Tribal 3-16D-54	9	5	S	4	W	4301352467		Oil Well	Approved Permit
State Tribal 1-3D-55	3	5	S	5	W	4301352471		Oil Well	Approved Permit
State Tribal 2-3D-55	3	5	S	5	W	4301352472		Oil Well	Approved Permit
State Tribal 7-3D-55	3	5	S	5	W	4301352473		Oil Well	Approved Permit
State Tribal 8-3D-55	3	5	S	5	W	4301352474		Oil Well	Approved Permit
Ute Tribal 2-16D-54	9	5	S	4	W	4301352481		Oil Well	Approved Permit
State Tribal 3-3D-55	3	5	S	5	W	4301352532		Oil Well	Approved Permit
State Tribal 4-3D-55	3	5	S	5	W	4301352533		Oil Well	Approved Permit
State Tribal 5-3D-55	3	5	S	5	W	4301352535		Oil Well	Approved Permit
State Tribal 6-3D-55	3	5	S	5	W	4301352536		Oil Well	Approved Permit
UTE TRIBAL 15-12D-55	12	5	S	5	W	4301352549		Oil Well	Approved Permit
Ute Tribal 9-11D-55	11	5	S	5	W	4301352564		Oil Well	Approved Permit
UTE TRIBAL 10-11D-55	11	5	S	5	W	4301352566		Oil Well	Approved Permit
UTE TRIBAL 15-11D-55	11	5	S	5	W	4301352567		Oil Well	Approved Permit
UTE TRIBAL 14-12D-55	12	5	S	5	W	4301352592		Oil Well	Approved Permit
UTE TRIBAL 13-12D-55	12	5	S	5	W	4301352593		Oil Well	Approved Permit
UTE TRIBAL 10-11D-54	11	5	S	4	W	4301352603		Oil Well	Approved Permit
UTE TRIBAL 9-11D-54	11	5	S	4	W	4301352604		Oil Well	Approved Permit
UTE TRIBAL 15-11-54	11	5	S	4	W	4301352605		Oil Well	Approved Permit
UTE TRIBAL 16-11D-54	11	5	S	4	W	4301352606		Oil Well	Approved Permit
UTE TRIBAL 14-11D-55	11	5	S	5	W	4301352610		Oil Well	Approved Permit
UTE TRIBAL 13-11D-55	11	5	S	5	W	4301352611		Oil Well	Approved Permit
UTE TRIBAL 12-11D-55	11	5	S	5	W	4301352612		Oil Well	Approved Permit
UTE TRIBAL 11-11D-55	11	5	S	5	W	4301352613		Oil Well	Approved Permit
Federal 6-7D-65	7	6	S	5	W	4301352682		Oil Well	Approved Permit
Federal 11-7D-65	7	6	S	5	W	4301352683		Oil Well	Approved Permit
Federal 10-7D-65	7	6	S	5	W	4301352684		Oil Well	Approved Permit
Federal 7-7D-65	7	6	S	5	W	4301352685		Oil Well	Approved Permit
UTE TRIBAL 4-17D-55	17	5	S	5	W	4301352695		Oil Well	Approved Permit
UTE TRIBAL 14-13D-54	13	5	S	4	W	4301352702		Oil Well	Approved Permit
State Tribal 3-11D-55	11	5	S	5	W	4301352704		Oil Well	Approved Permit
State Tribal 4-11D-55	11	5	S	5	W	4301352705		Oil Well	Approved Permit
State Tribal 5-11D-55	11	5	S	5	W	4301352706		Oil Well	Approved Permit
State Tribal 6-11D-55	11	5	S	5	W	4301352707		Oil Well	Approved Permit
State Tribal 8-11D-55	11	5	S	5	W	4301352708		Oil Well	Approved Permit

Well Transfer
From: Linn Operating, Inc.
To: Linn Operation, LLC
Effective: 3/1/2017

State Tribal 7-11D-55	11	5	S	5	W	4301352709		Oil Well	Approved Permit
State Tribal 2-11D-55	11	5	S	5	W	4301352710		Oil Well	Approved Permit
State Tribal 1-11D-55	11	5	S	5	W	4301352711		Oil Well	Approved Permit
UTE TRIBAL 9-4D-55	4	5	S	5	W	4301352713		Oil Well	Approved Permit
State Tribal 2-10D-55	10	5	S	5	W	4301352714		Oil Well	Approved Permit
State Tribal 7-10D-55	10	5	S	5	W	4301352715		Oil Well	Approved Permit
State Tribal 8-10D-55	10	5	S	5	W	4301352716		Oil Well	Approved Permit
UTE TRIBAL 10-4D-55	4	5	S	5	W	4301352717		Oil Well	Approved Permit
UTE TRIBAL 15-4D-55	4	5	S	5	W	4301352718		Oil Well	Approved Permit
State Tribal 1-10D-55	10	5	S	5	W	4301352720		Oil Well	Approved Permit
UTE TRIBAL 16-4D-55	4	5	S	5	W	4301352721		Oil Well	Approved Permit
State Tribal 3-10D-55	10	5	S	5	W	4301352723		Oil Well	Approved Permit
State Tribal 4-10D-55	10	5	S	5	W	4301352724		Oil Well	Approved Permit
State Tribal 5-10D-55	10	5	S	5	W	4301352725		Oil Well	Approved Permit
State Tribal 6-10D-55	10	5	S	5	W	4301352726		Oil Well	Approved Permit
UTE TRIBAL 11-5D-55	5	5	S	5	W	4301352727		Oil Well	Approved Permit
UTE TRIBAL 12-5D-55	5	5	S	5	W	4301352728		Oil Well	Approved Permit
UTE TRIBAL 13-5D-55	5	5	S	5	W	4301352729		Oil Well	Approved Permit
UTE TRIBAL 14-5D-55	5	5	S	5	W	4301352730		Oil Well	Approved Permit
State Tribal 15-2D-55	2	5	S	5	W	4301352732		Oil Well	Approved Permit
State Tribal 16-2D-55	2	5	S	5	W	4301352733		Oil Well	Approved Permit
State Tribal 9-2D-55	2	5	S	5	W	4301352735		Oil Well	Approved Permit
UTE TRIBAL 16-30D-55	30	5	S	5	W	4301352738		Oil Well	Approved Permit
Myrin Tribal 9-19D-55	19	5	S	5	W	4301352739		Oil Well	Approved Permit
State Tribal 16-3D-55	3	5	S	5	W	4301352740		Oil Well	Approved Permit
State Tribal 15-3D-55	3	5	S	5	W	4301352741		Oil Well	Approved Permit
State Tribal 10-3D-55	3	5	S	5	W	4301352742		Oil Well	Approved Permit
State Tribal 9-3D-55	3	5	S	5	W	4301352743		Oil Well	Approved Permit
Myrin Tribal 15-19D-55	19	5	S	5	W	4301352744		Oil Well	Approved Permit
Myrin Tribal 13-19D-55	19	5	S	5	W	4301352745		Oil Well	Approved Permit
Myrin Tribal 12-19D-55	19	5	S	5	W	4301352746		Oil Well	Approved Permit
UTE TRIBAL 5-4D-55	4	5	S	5	W	4301352747		Oil Well	Approved Permit
UTE TRIBAL 4-4D-55	4	5	S	5	W	4301352748		Oil Well	Approved Permit
UTE TRIBAL 3-4D-55	4	5	S	5	W	4301352749		Oil Well	Approved Permit
UTE TRIBAL 6-4D-55	4	5	S	5	W	4301352754		Oil Well	Approved Permit
UTE TRIBAL 7-31D-55	31	5	S	5	W	4301352764		Oil Well	Approved Permit
Myrin Tribal 11-19D-55	19	5	S	5	W	4301352765		Oil Well	Approved Permit
UTE TRIBAL 4-30D-55	30	5	S	5	W	4301352796		Oil Well	Approved Permit
UTE TRIBAL 5-30D-55	30	5	S	5	W	4301352797		Oil Well	Approved Permit
UTE TRIBAL 7-30D-55	30	5	S	5	W	4301352799		Oil Well	Approved Permit
UTE TRIBAL 1-30D-55	30	5	S	5	W	4301352809		Oil Well	Approved Permit
LC TRIBAL 6-25D-56	25	5	S	6	W	4301352810		Oil Well	Approved Permit
LC TRIBAL 4-25D-56	25	5	S	6	W	4301352812		Oil Well	Approved Permit
Federal 6-13D-65	13	6	S	5	W	4301352813		Oil Well	Approved Permit
Federal 4-13D-65	13	6	S	5	W	4301352814		Oil Well	Approved Permit

Well Transfer
From: Linn Operating, Inc.
To: Linn Operation, LLC
Effective: 3/1/2017

Federal 3-13D-65	13	6	S	5	W	4301352815		Oil Well	Approved Permit
Federal 3-16D-64	16	6	S	4	W	4301352823		Oil Well	Approved Permit
Federal 4-16D-64	16	6	S	4	W	4301352824		Oil Well	Approved Permit
Federal 5-16D-64	16	6	S	4	W	4301352825		Oil Well	Approved Permit
Federal 6-16D-64	16	6	S	4	W	4301352826		Oil Well	Approved Permit
Federal 5-13D-65	13	6	S	5	W	4301352827		Oil Well	Approved Permit
LC TRIBAL 1-25D-56	25	5	S	6	W	4301352835		Oil Well	Approved Permit
LC TRIBAL 2-25D-56	25	5	S	6	W	4301352836		Oil Well	Approved Permit
LC TRIBAL 8-25D-56	25	5	S	6	W	4301352837		Oil Well	Approved Permit
LC TRIBAL 9-25D-56	25	5	S	6	W	4301352840		Oil Well	Approved Permit
LC TRIBAL 15-25-56	25	5	S	6	W	4301352844		Oil Well	Approved Permit
Federal 9-5D-65	5	6	S	5	W	4301352846		Oil Well	Approved Permit
Federal 10-5D-65	5	6	S	5	W	4301352847		Oil Well	Approved Permit
LC TRIBAL 16-25D-56	25	5	S	6	W	4301352848		Oil Well	Approved Permit
LC TRIBAL 10-25D-56	25	5	S	6	W	4301352849		Oil Well	Approved Permit
UTE TRIBAL 8-30D-55	29	5	S	5	W	4301352855		Oil Well	Approved Permit
UTE TRIBAL 9-29D-55	29	5	S	5	W	4301352870		Oil Well	Approved Permit
UTE TRIBAL 6-24D-55	24	5	S	5	W	4301352871		Oil Well	Approved Permit
UTE TRIBAL 16-17D-55	17	5	S	5	W	4301352872		Oil Well	Approved Permit
Federal 9-8D-64	9	6	S	4	W	4301352880		Oil Well	Approved Permit
Federal 16-8D-64	9	6	S	4	W	4301352881		Oil Well	Approved Permit
UTE TRIBAL 13-27D-55	27	5	S	5	W	4301352882		Oil Well	Approved Permit
UTE TRIBAL 4-29D-55	29	5	S	5	W	4301352883		Oil Well	Approved Permit
UTE TRIBAL 1-29D-55	29	5	S	5	W	4301352884		Oil Well	Approved Permit
Federal 4-2D-65	2	6	S	5	W	4301352885		Oil Well	Approved Permit
Federal 5-2D-65	2	6	S	5	W	4301352886		Oil Well	Approved Permit
Federal 12-2D-65	2	6	S	5	W	4301352887		Oil Well	Approved Permit
LC TRIBAL 12-25D-56	25	5	S	6	W	4301352888		Oil Well	Approved Permit
LC TRIBAL 13-25D-56	25	5	S	6	W	4301352890		Oil Well	Approved Permit
LC TRIBAL 14-25D-56	25	5	S	6	W	4301352891		Oil Well	Approved Permit
Federal 15-3D-65	3	6	S	5	W	4301352892		Oil Well	Approved Permit
Federal 9-3D-65	3	6	S	5	W	4301352893		Oil Well	Approved Permit
Federal 8-3D-65	3	6	S	5	W	4301352894		Oil Well	Approved Permit
Federal 6-3D-65	3	6	S	5	W	4301352895		Oil Well	Approved Permit
LC Nielsen Tribal 6-33D-56	33	5	S	6	W	4301352896		Oil Well	Approved Permit
LC Nielsen Tribal 2-33D-56	33	5	S	6	W	4301352897		Oil Well	Approved Permit
LC Nielsen Tribal 4-33D-56	33	5	S	6	W	4301352898		Oil Well	Approved Permit
LC Nielsen Tribal 5-33D-56	33	5	S	6	W	4301352899		Oil Well	Approved Permit
UTE FEE 13-9D-54	9	5	S	4	W	4301352906		Oil Well	Approved Permit
UTE FEE 2-34D-55	27	5	S	5	W	4301352971		Oil Well	Approved Permit
Federal 13-7D-65	7	6	S	5	W	4301352974		Oil Well	Approved Permit
Federal 14-7D-65	7	6	S	5	W	4301352975		Oil Well	Approved Permit
UTE TRIBAL 6-27D-55	27	5	S	5	W	4301352976		Oil Well	Approved Permit
LC Nielsen Tribal 12-27D-56	27	5	S	6	W	4301352977		Oil Well	Approved Permit
LC Nielsen Tribal 13-27D-56	27	5	S	6	W	4301352978		Oil Well	Approved Permit

Well Transfer
From: Linn Operating, Inc.
To: Linn Operation, LLC
Effective: 3/1/2017

LC Nielsen Tribal 16-28D-56	27	5	S	6	W	4301352979		Oil Well	Approved Permit
LC Nielsen Fee 9-28D-56	27	5	S	6	W	4301352980		Oil Well	Approved Permit
LC FEE 9-36D-56	36	5	S	6	W	4301352982		Oil Well	Approved Permit
LC FEE 15-36D-56	36	5	S	6	W	4301352983		Oil Well	Approved Permit
LC TRIBAL 6-36D-56	36	5	S	6	W	4301352984		Oil Well	Approved Permit
LC TRIBAL 5-36D-56	36	5	S	6	W	4301352985		Oil Well	Approved Permit
LC TRIBAL 4-36D-56	36	5	S	6	W	4301352986		Oil Well	Approved Permit
LC TRIBAL 3-36D-56	36	5	S	6	W	4301352987		Oil Well	Approved Permit
LC TRIBAL 2-35D-56	35	5	S	6	W	4301352988		Oil Well	Approved Permit
LC TRIBAL 1-35D-56	35	5	S	6	W	4301352989		Oil Well	Approved Permit
LC TRIBAL 9-35D-56	35	5	S	6	W	4301353018		Oil Well	Approved Permit
LC TRIBAL 6-35D-56	35	5	S	6	W	4301353019		Oil Well	Approved Permit
LC TRIBAL 10-35D-56	35	5	S	6	W	4301353020		Oil Well	Approved Permit
UTE TRIBAL 9-17D-55	17	5	S	5	W	4301353022		Oil Well	Approved Permit
LC TRIBAL 8-35D-56	35	5	S	6	W	4301353023		Oil Well	Approved Permit
UTE TRIBAL 10-17D-55	17	5	S	5	W	4301353024		Oil Well	Approved Permit
LC TRIBAL 7-35D-56	35	5	S	6	W	4301353025		Oil Well	Approved Permit
LC TRIBAL 5-35D-56	35	5	S	6	W	4301353026		Oil Well	Approved Permit
LC TRIBAL 15-35D-56	35	5	S	6	W	4301353027		Oil Well	Approved Permit
LC TRIBAL 16-35D-56	35	5	S	6	W	4301353028		Oil Well	Approved Permit
LC TRIBAL 3-35D-56	35	5	S	6	W	4301353029		Oil Well	Approved Permit
LC TRIBAL 4-35D-56	35	5	S	6	W	4301353030		Oil Well	Approved Permit
LC TRIBAL 14-35D-56	35	5	S	6	W	4301353036		Oil Well	Approved Permit
LC TRIBAL 13-35D-56	35	5	S	6	W	4301353038		Oil Well	Approved Permit
LC TRIBAL 12-35D-56	35	5	S	6	W	4301353039		Oil Well	Approved Permit
LC TRIBAL 11-35D-56	35	5	S	6	W	4301353040		Oil Well	Approved Permit
UTE TRIBAL 8-14D-55	14	5	S	5	W	4301353099		Oil Well	Approved Permit
LC FEE 13-36D-56	36	5	S	6	W	4301353114		Oil Well	Approved Permit
LC FEE 11-36D-56	36	5	S	6	W	4301353115		Oil Well	Approved Permit
LC Nielsen Fee 15-28D-56	28	5	S	6	W	4301353131		Oil Well	Approved Permit
UTE TRIBAL 3-20D-55	20	5	S	5	W	4301333280	18424	Oil Well	Drilling Operations Suspended
LC TRIBAL 4H-17-56	17	5	S	6	W	4301333540	18067	Oil Well	Drilling Operations Suspended
UTE TRIBAL 8-20D-55	20	5	S	5	W	4301333676	17308	Oil Well	Drilling Operations Suspended
UTE TRIBAL 14-14D-55	14	5	S	5	W	4301333699	18409	Oil Well	Drilling Operations Suspended
UTE TRIBAL 5-29D-55	29	5	S	5	W	4301333740	17306	Oil Well	Drilling Operations Suspended
UTE TRIBAL 7-32D-55	32	5	S	5	W	4301333794	18359	Oil Well	Drilling Operations Suspended
UTE TRIBAL 12-27D-55	27	5	S	5	W	4301333798	18360	Oil Well	Drilling Operations Suspended
BERRY TRIBAL 2-23D-54	23	5	S	4	W	4301333805	18546	Oil Well	Drilling Operations Suspended
UTE TRIBAL 13-29D-55	29	5	S	5	W	4301333807	18378	Oil Well	Drilling Operations Suspended
UTE TRIBAL 16-28D-55	28	5	S	5	W	4301333887	18594	Oil Well	Drilling Operations Suspended
FEDERAL 10-10D-65	10	6	S	5	W	4301350523	19773	Oil Well	Drilling Operations Suspended
LC FEE 8-15D-56	15	5	S	6	W	4301350597	19347	Oil Well	Drilling Operations Suspended
SFW FEE 13-10D-54	10	5	S	4	W	4301350892	19186	Oil Well	Drilling Operations Suspended
SFW TRIBAL 11-10D-54	10	5	S	4	W	4301350893	19215	Oil Well	Drilling Operations Suspended
LC TRIBAL 16-34D-45	34	4	S	5	W	4301350977	18658	Oil Well	Drilling Operations Suspended

Well Transfer
From: Linn Operating, Inc.
To: Linn Operation, LLC
Effective: 3/1/2017

LC TRIBAL 5-29D-56	29	5	S	6	W	4301351184		Oil Well	Drilling Operations Suspended
LC TRIBAL 2-33D-45	33	4	S	5	W	4301351402	18854	Oil Well	Drilling Operations Suspended
LC TRIBAL 9-24D-45	24	4	S	5	W	4301351431	18861	Oil Well	Drilling Operations Suspended
LC TRIBAL 9-3D-56	3	5	S	6	W	4301351514	18948	Oil Well	Drilling Operations Suspended
GALLOWAY #2-14B2	14	2	S	2	W	4301351739	19044	Oil Well	Drilling Operations Suspended
LC Tribal 3-34D-56	34	5	S	6	W	4301352087	19234	Oil Well	Drilling Operations Suspended
LC Tribal 7-34D-56	34	5	S	6	W	4301352088	19235	Oil Well	Drilling Operations Suspended
Ute Tribal 5-9D-54	9	5	S	4	W	4301352463	19354	Oil Well	Drilling Operations Suspended
Ute Tribal 3-9D-54	9	5	S	4	W	4301352464	19355	Oil Well	Drilling Operations Suspended
UTE TRIBAL 7-17D-55	17	5	S	5	W	4301352691	19691	Oil Well	Drilling Operations Suspended
UTE TRIBAL 6-17D-55	17	5	S	5	W	4301352692	19708	Oil Well	Drilling Operations Suspended
UTE TRIBAL 3-17D-55	17	5	S	5	W	4301352693	19709	Oil Well	Drilling Operations Suspended
UTE TRIBAL 2-17D-55	17	5	S	5	W	4301352694	19692	Oil Well	Drilling Operations Suspended
State Tribal 3-12D-55	12	5	S	5	W	4301352697	19667	Oil Well	Drilling Operations Suspended
State Tribal 4-12D-55	12	5	S	5	W	4301352698	19668	Oil Well	Drilling Operations Suspended
State Tribal 10-2D-55	2	5	S	5	W	4301352734	19710	Oil Well	Drilling Operations Suspended
LC TRIBAL 1-36D-56	36	5	S	6	W	4301353021		Oil Well	Drilling Operations Suspended
LC TRIBAL 8-36D-56	36	5	S	6	W	4301353034		Oil Well	Drilling Operations Suspended
LC TRIBAL 7-36D-56	36	5	S	6	W	4301353035		Oil Well	Drilling Operations Suspended
LC TRIBAL 2-36D-56	36	5	S	6	W	4301353037		Oil Well	Drilling Operations Suspended
UTE TRIBAL 13-17D-55	17	5	S	5	W	4301333550		Oil Well	Location Abandoned
UTE TRIBAL 11-14D-54	14	5	S	4	W	4301333596		Oil Well	Location Abandoned
UTE TRIBAL 16-17D-55	17	5	S	5	W	4301333622		Oil Well	Location Abandoned
LC TRIBAL 14-16D-56	16	5	S	6	W	4301334283		Oil Well	Location Abandoned
LC TRIBAL 3-23D-56	23	5	S	6	W	4301350624		Oil Well	Location Abandoned
FEDERAL 2-1D-64	1	6	S	4	W	4301350765		Oil Well	Location Abandoned
FEDERAL 7-1D-64	1	6	S	4	W	4301350766		Oil Well	Location Abandoned
FEDERAL 9-1D-64	1	6	S	4	W	4301350767		Oil Well	Location Abandoned
CC FEE 8-24-38	24	3	S	8	W	4301350885		Oil Well	Location Abandoned
LC FEE 4H-12-57	12	5	S	7	W	4301350952		Oil Well	Location Abandoned
CC TRIBAL 4-2-48	2	4	S	8	W	4301350964		Oil Well	Location Abandoned
LC TRIBAL 7-2D-56	2	5	S	6	W	4301350988		Oil Well	Location Abandoned
LC TRIBAL 10-18D-56	18	5	S	6	W	4301350989		Oil Well	Location Abandoned
LC TRIBAL 3-16D-56	16	5	S	6	W	4301351032		Oil Well	Location Abandoned
CC FEE 6-21-38	21	3	S	8	W	4301351059		Oil Well	Location Abandoned
LC TRIBAL 12H-19-56	19	5	S	6	W	4301351193		Oil Well	Location Abandoned
LC FEE 15-11D-56	11	5	S	6	W	4301351197		Oil Well	Location Abandoned
LC TRIBAL 13H-10-56	11	5	S	6	W	4301351209		Oil Well	Location Abandoned
LC TRIBAL 2-31D-45	31	4	S	5	W	4301351261		Oil Well	Location Abandoned
LC TRIBAL 13H-24-45	24	4	S	5	W	4301351273		Oil Well	Location Abandoned
UTE TRIBAL 6-21D-55	21	5	S	5	W	4301351274		Oil Well	Location Abandoned
UTE TRIBAL 15-16D-55	16	5	S	5	W	4301351284		Oil Well	Location Abandoned
UTE TRIBAL 4H-15-55	15	5	S	5	W	4301351292		Oil Well	Location Abandoned
UTE TRIBAL 13H-14-54	14	5	S	4	W	4301351297		Oil Well	Location Abandoned
UTE TRIBAL 1-32-55	32	5	S	5	W	4301351298		Oil Well	Location Abandoned

Well Transfer
From: Linn Operating, Inc.
To: Linn Operation, LLC
Effective: 3/1/2017

UTE TRIBAL 4-21D-55	21	5	S	5	W	4301351299		Oil Well	Location Abandoned
LC TRIBAL 12-33-45	33	4	S	5	W	4301351301		Oil Well	Location Abandoned
UTE TRIBAL 16-15D-55	15	5	S	5	W	4301351302		Oil Well	Location Abandoned
UTE TRIBAL 2-24-55	24	5	S	5	W	4301351304		Oil Well	Location Abandoned
LC TRIBAL 11-32D-56	32	5	S	6	W	4301351315		Oil Well	Location Abandoned
LC TRIBAL 1-32D-56	32	5	S	6	W	4301351317		Oil Well	Location Abandoned
LC TRIBAL 5H-32-56	32	5	S	6	W	4301351318		Oil Well	Location Abandoned
LC TRIBAL 14-28-45	28	4	S	5	W	4301351339		Oil Well	Location Abandoned
LC TRIBAL 16-32D-45	32	4	S	5	W	4301351340		Oil Well	Location Abandoned
LC TRIBAL 3-31-45	31	4	S	5	W	4301351347		Oil Well	Location Abandoned
LC TRIBAL 1-18D-56	18	5	S	6	W	4301351367		Oil Well	Location Abandoned
LC TRIBAL 9-18D-56	18	5	S	6	W	4301351368		Oil Well	Location Abandoned
LC FEE 9-23D-56	23	5	S	6	W	4301351380		Oil Well	Location Abandoned
LC TRIBAL 1-34D-45	34	4	S	5	W	4301351382		Oil Well	Location Abandoned
LC TRIBAL 12-21D-56	21	5	S	6	W	4301351383		Oil Well	Location Abandoned
LC TRIBAL 7-29D-56	29	5	S	6	W	4301351386		Oil Well	Location Abandoned
UTE TRIBAL 6-15-55	15	5	S	5	W	4301351399		Oil Well	Location Abandoned
UTE TRIBAL7-21D-55	21	5	S	5	W	4301351403		Oil Well	Location Abandoned
CC FEE 13-9D-37	9	3	S	7	W	4301351409		Oil Well	Location Abandoned
CC FEE 16-21D-38	21	3	S	8	W	4301351410		Oil Well	Location Abandoned
UTE TRIBAL 5H-10-54	10	5	S	4	W	4301351415		Oil Well	Location Abandoned
LC FEE 14-1-56	1	5	S	6	W	4301351457		Oil Well	Location Abandoned
LC TRIBAL 5-3D-56	3	5	S	6	W	4301351459		Oil Well	Location Abandoned
LC TRIBAL 12H-23-56	23	5	S	6	W	4301351488		Oil Well	Location Abandoned
LC TRIBAL 12HH-31-45	32	4	S	5	W	4301351499		Oil Well	Location Abandoned
CC Tribal 3-27D-38	27	3	S	8	W	4301351604		Oil Well	Location Abandoned
Myrin Fee 3-16D-55	16	5	S	5	W	4301351633		Oil Well	Location Abandoned
LC TRIBAL 12H-34-56	34	5	S	6	W	4301351634		Oil Well	Location Abandoned
UTE FEE 12-16D-55	16	5	S	5	W	4301351635		Oil Well	Location Abandoned
LC Tribal 13-11D-58	11	5	S	8	W	4301351708		Oil Well	Location Abandoned
LC Tribal 15-11D-58	11	5	S	8	W	4301351709		Oil Well	Location Abandoned
LC FEE 1-11D-56	11	5	S	6	W	4301351712		Oil Well	Location Abandoned
LC Tribal 8M-23-45	23	4	S	5	W	4301351722		Oil Well	Location Abandoned
LC Tribal 3-14D-58	11	5	S	8	W	4301351726		Oil Well	Location Abandoned
LC Tribal 11-11D-58	11	5	S	8	W	4301351729		Oil Well	Location Abandoned
GALLOWAY #3-12B2	12	2	S	2	W	4301351742		Oil Well	Location Abandoned
LC TRIBAL 8-31D-56	31	5	S	6	W	4301351746		Oil Well	Location Abandoned
LC Fee 2-6D-57	6	5	S	7	W	4301351749		Oil Well	Location Abandoned
LC Tribal 15-12D-58	12	5	S	8	W	4301351783		Oil Well	Location Abandoned
LC Tribal 9-12D-58	12	5	S	8	W	4301351784		Oil Well	Location Abandoned
LC Tribal 1-13D-58	12	5	S	8	W	4301351785		Oil Well	Location Abandoned
LC Tribal 13-7D-57	12	5	S	8	W	4301351786		Oil Well	Location Abandoned
LC Tribal 9-2D-58	2	5	S	8	W	4301351788		Oil Well	Location Abandoned
LC Tribal 1-2D-58	2	5	S	8	W	4301351789		Oil Well	Location Abandoned
LC Tribal 5-1D-58	2	5	S	8	W	4301351790		Oil Well	Location Abandoned

Well Transfer
From: Linn Operating, Inc.
To: Linn Operation, LLC
Effective: 3/1/2017

LC Fee 15-6D-57	6	5	S	7	W	4301351816		Oil Well	Location Abandoned
GALLOWAY 4-14B2	14	2	S	2	W	4301351818		Oil Well	Location Abandoned
MORRIS #3-8B1	8	2	S	1	W	4301351836		Oil Well	Location Abandoned
FRITZ #3-24A2	24	1	S	2	W	4301351837		Oil Well	Location Abandoned
LC Fee 7-31D-45	31	4	S	5	W	4301351857		Oil Well	Location Abandoned
LC Tribal 5-31D-45	31	4	S	5	W	4301351858		Oil Well	Location Abandoned
LC Tribal 16-31-45	31	4	S	5	W	4301351863		Oil Well	Location Abandoned
LC FEE 4-32D-45	31	4	S	5	W	4301351892		Oil Well	Location Abandoned
CC Fee 8R-9-37	9	3	S	7	W	4301351937		Oil Well	Location Abandoned
LC Tribal 13-26D-56	26	5	S	6	W	4301352099		Oil Well	Location Abandoned
LC Tribal 2-27D-45	27	4	S	5	W	4301352100		Oil Well	Location Abandoned
LC Tribal 8-27D-45	27	4	S	5	W	4301352101		Oil Well	Location Abandoned
Abbott Fee 1-6D-54	6	5	S	4	W	4301352324		Oil Well	Location Abandoned
Abbott Fee 7-6D-54	6	5	S	4	W	4301352327		Oil Well	Location Abandoned
UTE FEE 10-9D-54	9	5	S	4	W	4301352475		Oil Well	Location Abandoned
UTE FEE 12-9D-54	9	5	S	4	W	4301352476		Oil Well	Location Abandoned
UTE FEE 16-9D-54	9	5	S	4	W	4301352478		Oil Well	Location Abandoned
UTE FEE 11-9D-54	9	5	S	4	W	4301352544		Oil Well	Location Abandoned
UTE TRIBAL 6-5D-55	5	5	S	5	W	4301352556		Oil Well	Location Abandoned
UTE TRIBAL 5-5D-55	5	5	S	5	W	4301352557		Oil Well	Location Abandoned
UTE TRIBAL 4-5D-55	5	5	S	5	W	4301352558		Oil Well	Location Abandoned
UTE TRIBAL 3-5D-55	5	5	S	5	W	4301352559		Oil Well	Location Abandoned
UTE TRIBAL 10-30D-55	30	5	S	5	W	4301352736		Oil Well	Location Abandoned
UTE TRIBAL 8-5D-55	5	5	S	5	W	4301352773		Oil Well	Location Abandoned
UTE FEE 1-13D-55	13	5	S	5	W	4301352838		Oil Well	Location Abandoned
SCOFIELD-THORPE 26-31	26	12	S	7	E	4300730987		Dry Hole	Plugged & Abandoned
SCOFIELD-THORPE 26-43	26	12	S	7	E	4300730990		Dry Hole	Plugged & Abandoned
SCOFIELD CHRISTIANSEN 8-23	8	12	S	7	E	4300730999		Dry Hole	Plugged & Abandoned
MAUREL TAYLOR FEE 1-36A2	36	1	S	2	W	4301330143	5525	Oil Well	Plugged & Abandoned
NUTTERS RIDGE FED 5-1	5	6	S	4	W	4301330403	8231	Oil Well	Plugged & Abandoned
ANTELOPE RIDGE 24-1	24	6	S	5	W	4301330426		Dry Hole	Plugged & Abandoned
B C UTE TRIBAL 8-21	21	5	S	4	W	4301330829	8414	Water Injection Well	Plugged & Abandoned
LC TRIBAL 16-21-46	21	4	S	6	W	4301333575		Dry Hole	Plugged & Abandoned
LC TRIBAL 8-4-56	4	5	S	6	W	4301333605	17046	Oil Well	Plugged & Abandoned
FOY 9-33D-55	33	5	S	5	W	4301333802		Dry Hole	Plugged & Abandoned
EMERALD 2-32A1	32	1	S	1	W	4301350059		Dry Hole	Plugged & Abandoned
CC FEE 7-28-38	28	3	S	8	W	4301350887		Dry Hole	Plugged & Abandoned
CC FEE 8-9-37	9	3	S	7	W	4301350896		Dry Hole	Plugged & Abandoned
LC TRIBAL 5HH-5-56	4	5	S	6	W	4301350927		Dry Hole	Plugged & Abandoned
LC TRIBAL 3-4D-56	4	5	S	6	W	4301351000		Dry Hole	Plugged & Abandoned
GALLOWAY #3-14B2	14	2	S	2	W	4301351741		Dry Hole	Plugged & Abandoned
ST LOST CREEK 32-44	32	11	S	7	E	4304930023		Dry Hole	Plugged & Abandoned
CLYDE MURRAY 1-2A2	2	1	S	2	W	4301330005	5876	Oil Well	Producing
VICTOR C BROWN 1-4A2	4	1	S	2	W	4301330011	5780	Oil Well	Producing
L BOREN U 3-15A2	15	1	S	2	W	4301330086	5755	Oil Well	Producing

Well Transfer
From: Linn Operating, Inc.
To: Linn Operation, LLC
Effective: 3/1/2017

LAMICQ-URTY U 3-17A2	17	1	S	2	W	4301330099	5745	Oil Well	Producing
L BOREN U 4-23A2	23	1	S	2	W	4301330115	5905	Oil Well	Producing
TOMLINSON FED 1-25A2	25	1	S	2	W	4301330120	5535	Oil Well	Producing
WOODWARD 1-21A2	21	1	S	2	W	4301330130	5665	Oil Well	Producing
LAMICQ 1-20A2	20	1	S	2	W	4301330133	5400	Gas Well	Producing
L RBRTSN ST 1-1B2	1	2	S	2	W	4301330200	5410	Oil Well	Producing
SMITH ALBERT 1-8C5	8	3	S	5	W	4301330245	5490	Oil Well	Producing
FRESTON ST 1-8B1	8	2	S	1	W	4301330294	5345	Oil Well	Producing
GEORGE MURRAY 1-16B1	16	2	S	1	W	4301330297	5950	Oil Well	Producing
LAMICQ-URTY U 4-5A2	5	1	S	2	W	4301330347	5845	Oil Well	Producing
H G COLTHARP 1-15B1	15	2	S	1	W	4301330359	5945	Oil Well	Producing
STATE 3-18A1	18	1	S	1	W	4301330369	5810	Oil Well	Producing
BC UTE TRIBAL 4-22	22	5	S	4	W	4301330755	2620	Oil Well	Producing
DILLMAN 2-28A2	28	1	S	2	W	4301330821	5666	Oil Well	Producing
B C UTE TRIBAL 16-16	16	5	S	4	W	4301330841	9489	Oil Well	Producing
B C UTE TRIBAL 14-15	15	5	S	4	W	4301330842	9440	Oil Well	Producing
UTE TRIBAL 1-32R	32	5	S	4	W	4301330872	13020	Oil Well	Producing
UTE TRIBAL 23-3R	23	5	S	4	W	4301330886	13034	Oil Well	Producing
UTE TRIBAL 13-3R-54	3	5	S	4	W	4301330924	9488	Oil Well	Producing
S COTTONWOOD RIDGE UTE TRIBAL 1-19	19	5	S	4	W	4301330933	9845	Oil Well	Producing
TABBY CYN UTE TRIBAL 1-25	25	5	S	5	W	4301330945	9722	Oil Well	Producing
S BRUNDAGE UTE TRIBAL 1-30	30	5	S	4	W	4301330948	9850	Oil Well	Producing
SOWERS CYN UTE TRIBAL 3-26	26	5	S	5	W	4301330955	10423	Oil Well	Producing
UTE TRIBAL 3-24R-55 (REENTRY)	24	5	S	5	W	4301330960	15173	Oil Well	Producing
UTE TRIBAL 1-20	20	5	S	4	W	4301330966	9925	Oil Well	Producing
JOHN 2-3-B2	3	2	S	2	W	4301330975	5387	Oil Well	Producing
LAMICQ-ROBERTSON ST 2-1B2	1	2	S	2	W	4301330995	5412	Oil Well	Producing
T C UTE TRIBAL 9-23X	23	5	S	5	W	4301330999	9720	Oil Well	Producing
UTE TRIBAL 2-7A2	7	1	S	2	W	4301331009	5836	Oil Well	Producing
UTE TRIBAL 15-24R	24	5	S	5	W	4301331129	11985	Oil Well	Producing
S BRUNDAGE CYN UTE TRIBAL 4-27	27	5	S	4	W	4301331131	9851	Oil Well	Producing
HATCH 2-3B1	3	2	S	1	W	4301331147	10615	Oil Well	Producing
NORLING 2-9B1	9	2	S	1	W	4301331151	10616	Oil Well	Producing
UTE TRIBAL 5-13	13	5	S	5	W	4301331152	10421	Oil Well	Producing
SHAW 2-27A2	27	1	S	2	W	4301331184	10753	Oil Well	Producing
LAMICQ-URRITY 4-17A2	17	1	S	2	W	4301331190	10764	Oil Well	Producing
FRESTON 2-8B1	8	2	S	1	W	4301331203	10851	Oil Well	Producing
WISSE 3-35A2	35	1	S	2	W	4301331215	10925	Oil Well	Producing
MECCA 2-8A2	8	1	S	2	W	4301331231	10981	Oil Well	Producing
SWYKES 2-21A2	21	1	S	2	W	4301331235	10998	Oil Well	Producing
SHERMAN 2-12B2	12	2	S	2	W	4301331238	11009	Oil Well	Producing
DUNCAN 4-2A2	2	1	S	2	W	4301331276	11258	Gas Well	Producing
HAMBLIN 3-9A2	9	1	S	2	W	4301331278	11094	Gas Well	Producing
UTE TRIBAL 7-20R-54	20	5	S	4	W	4301331281	14088	Oil Well	Producing
Z and T UTE TRIBAL 7-19	19	5	S	4	W	4301331282	11131	Oil Well	Producing

Well Transfer
From: Linn Operating, Inc.
To: Linn Operation, LLC
Effective: 3/1/2017

UTE TRIBAL 13-19	19	5	S	4	W	4301331284	11134	Oil Well	Producing
BAR-F 2-5B1	5	2	S	1	W	4301331286	11113	Oil Well	Producing
Z and T UTE TRIBAL 7-25	25	5	S	5	W	4301331310	11416	Oil Well	Producing
SMITH 2-9C5	9	3	S	5	W	4301331321	11245	Oil Well	Producing
LORANGER 2-24A2	24	1	S	2	W	4301331322	11244	Oil Well	Producing
UTE 2-6B3	6	2	S	3	W	4301331325	11446	Oil Well	Producing
MCELPRANG 2-30A1	30	1	S	1	W	4301331326	11252	Oil Well	Producing
SMITH 2-7C5	7	3	S	5	W	4301331327	11324	Oil Well	Producing
SMITH 2-18C5	18	3	S	5	W	4301331328	11336	Oil Well	Producing
UTE 2-24A3	24	1	S	3	W	4301331329	11339	Oil Well	Producing
UTE 5-19A2	19	1	S	2	W	4301331330	11277	Oil Well	Producing
EDWARDS 3-10B1	10	2	S	1	W	4301331332	11264	Oil Well	Producing
SUNDANCE 4-15A2	15	1	S	2	W	4301331333	11269	Oil Well	Producing
LORANGER 6-22A2	22	1	S	2	W	4301331334	11335	Oil Well	Producing
COX 2-36A2	36	1	S	2	W	4301331335	11330	Oil Well	Producing
SMITH 2-6C5	6	3	S	5	W	4301331338	11367	Oil Well	Producing
FRESTON 2-7B1	7	2	S	1	W	4301331341	11338	Oil Well	Producing
PEARSON 2-11B2	11	2	S	2	W	4301331356	11359	Oil Well	Producing
LAMB 2-16A2	16	1	S	2	W	4301331390	11487	Oil Well	Producing
LABRUM 2-23A2	23	1	S	2	W	4301331393	11514	Oil Well	Producing
UTE TRIBAL 13-17	17	5	S	4	W	4301331546	11921	Oil Well	Producing
UTE TRIBAL 11-19	19	5	S	4	W	4301331547	11920	Oil Well	Producing
UTE TRIBAL 13-22	22	5	S	4	W	4301331548	11926	Oil Well	Producing
UTE TRIBAL 1-28	28	5	S	4	W	4301331549	11925	Oil Well	Producing
UTE TRIBAL 4-30	30	5	S	4	W	4301331550	11914	Oil Well	Producing
UTE TRIBAL 15-16	16	5	S	4	W	4301331648	11951	Oil Well	Producing
UTE TRIBAL 16-18	18	5	S	4	W	4301331650	11946	Oil Well	Producing
UTE TRIBAL 5-20	20	5	S	4	W	4301331651	11957	Oil Well	Producing
UTE TRIBAL 15-23	23	5	S	5	W	4301331671	11989	Oil Well	Producing
TABBY CANYON 1-21	21	5	S	5	W	4301331699	12225	Oil Well	Producing
TABBY CANYON 8-22	22	5	S	5	W	4301331700	12008	Oil Well	Producing
SOWERS CANYON 9-27	27	5	S	5	W	4301331701	11997	Oil Well	Producing
UTE TRIBAL 9-19	19	5	S	4	W	4301331831	12175	Oil Well	Producing
UTE TRIBAL 15-19	19	5	S	4	W	4301331832	12180	Oil Well	Producing
UTE TRIBAL 2-25	25	5	S	5	W	4301331833	12153	Oil Well	Producing
UTE TRIBAL 3-25	25	5	S	5	W	4301331834	12152	Oil Well	Producing
UTE TRIBAL 11-24	24	5	S	5	W	4301331909	12190	Oil Well	Producing
UTE TRIBAL 13-24	24	5	S	5	W	4301331910	12217	Oil Well	Producing
UTE TRIBAL 11-25	25	5	S	5	W	4301331911	12182	Oil Well	Producing
UTE TRIBAL 1-26	26	5	S	5	W	4301331912	12235	Oil Well	Producing
UTE TRIBAL 2-19	19	5	S	4	W	4301332140	12795	Oil Well	Producing
UTE TRIBAL 6-25H	25	5	S	5	W	4301332143	12750	Oil Well	Producing
UTE TRIBAL 9-18	18	5	S	4	W	4301332144	12746	Oil Well	Producing
UTE TRIBAL 11-17	17	5	S	4	W	4301332145	12747	Oil Well	Producing
UTE TRIBAL 12-17	17	5	S	4	W	4301332146	12745	Oil Well	Producing

Well Transfer
From: Linn Operating, Inc.
To: Linn Operation, LLC
Effective: 3/1/2017

UTE TRIBAL 15-18	18	5	S	4	W	4301332148	12794	Oil Well	Producing
UTE TRIBAL 6-22	22	5	S	4	W	4301332163	12974	Oil Well	Producing
UTE TRIBAL 6-21	21	5	S	4	W	4301332164	12994	Oil Well	Producing
UTE TRIBAL 7-28	28	5	S	4	W	4301332166	12995	Oil Well	Producing
UTE TRIBAL 11-20	20	5	S	4	W	4301332168	12946	Oil Well	Producing
UTE TRIBAL 13-25	25	5	S	5	W	4301332169	12857	Oil Well	Producing
UTE TRIBAL 2-27	27	5	S	4	W	4301332179	12975	Oil Well	Producing
UTE TRIBAL 1-34	34	5	S	4	W	4301332186	13121	Oil Well	Producing
UTE TRIBAL 2-35	35	5	S	5	W	4301332187	13021	Oil Well	Producing
UTE TRIBAL 4-36	36	5	S	5	W	4301332188	13063	Oil Well	Producing
UTE TRIBAL 5-28	28	5	S	4	W	4301332189	13026	Oil Well	Producing
UTE TRIBAL 5-31	31	5	S	4	W	4301332190	13080	Oil Well	Producing
UTE TRIBAL 9-26	26	5	S	4	W	4301332191	13101	Oil Well	Producing
UTE TRIBAL 11-28	28	5	S	4	W	4301332192	13022	Oil Well	Producing
UTE TRIBAL 3-29	29	5	S	4	W	4301332193	13042	Oil Well	Producing
BOWMAN 5-5A2	5	1	S	2	W	4301332202	13043	Oil Well	Producing
BOREN 4-9A2	9	1	S	2	W	4301332203	13079	Oil Well	Producing
UTE TRIBAL 5-19	19	5	S	4	W	4301332204	13090	Oil Well	Producing
UTE TRIBAL 12-15	15	5	S	4	W	4301332205	13100	Oil Well	Producing
UTE TRIBAL 13-20	20	5	S	4	W	4301332206	13048	Oil Well	Producing
BLANCHARD 3-10A2	10	1	S	2	W	4301332223	13149	Oil Well	Producing
SQUIRES 3-8A2	8	1	S	2	W	4301332227	13176	Oil Well	Producing
UTE TRIBAL 1-24-55	24	5	S	5	W	4301332259	13618	Oil Well	Producing
UTE TRIBAL 3-28-54	28	5	S	4	W	4301332261	13644	Oil Well	Producing
UTE TRIBAL 5-26-55	26	5	S	5	W	4301332264	13642	Oil Well	Producing
UTE TRIBAL 6-36-55	36	5	S	5	W	4301332265	13600	Oil Well	Producing
UTE TRIBAL 8-35-55	35	5	S	5	W	4301332267	13571	Oil Well	Producing
UTE TRIBAL 9-24-55	24	5	S	5	W	4301332268	13620	Oil Well	Producing
UTE TRIBAL 11-23-55	23	5	S	5	W	4301332269	13572	Oil Well	Producing
UTE TRIBAL 15-25-55	25	5	S	5	W	4301332271	13566	Oil Well	Producing
UTE TRIBAL 16-14-55	14	5	S	5	W	4301332272	13567	Oil Well	Producing
UTE TRIBAL 15-27-55	27	5	S	5	W	4301332339	14020	Oil Well	Producing
UTE TRIBAL 5-15-55	15	5	S	5	W	4301332344	13606	Oil Well	Producing
UTE TRIBAL 7-20-55	20	5	S	5	W	4301332346	13607	Oil Well	Producing
MOON TRIBAL 12-23-54	23	5	S	4	W	4301332347	14008	Oil Well	Producing
UTE TRIBAL 14-28-55	28	5	S	5	W	4301332348	13580	Oil Well	Producing
UTE TRIBAL 16-29-55	29	5	S	5	W	4301332349	13581	Oil Well	Producing
UTE TRIBAL 2-32-55	32	5	S	5	W	4301332350	13695	Oil Well	Producing
FOY TRIBAL 11-34-55	34	5	S	5	W	4301332351	13648	Oil Well	Producing
UTE TRIBAL 16-35-55	35	5	S	5	W	4301332352	14267	Oil Well	Producing
UTE TRIBAL 10-35-55	35	5	S	5	W	4301332353	13645	Oil Well	Producing
UTE TRIBAL 12-36-55	36	5	S	5	W	4301332354	13643	Oil Well	Producing
UTE TRIBAL 14-36-55	36	5	S	5	W	4301332355	14262	Oil Well	Producing
UTE TRIBAL 16-36-55	36	5	S	5	W	4301332356	14122	Oil Well	Producing
UTE TRIBAL 4-33-55	33	5	S	5	W	4301332357	13685	Oil Well	Producing

Well Transfer
From: Linn Operating, Inc.
To: Linn Operation, LLC
Effective: 3/1/2017

UTE TRIBAL 15-17-55	17	5	S	5	W	4301332358	13698	Oil Well	Producing
UTE TRIBAL 12-14-54	14	5	S	4	W	4301332369	13647	Oil Well	Producing
UTE TRIBAL 3-20-54	20	5	S	4	W	4301332377	13955	Oil Well	Producing
UTE TRIBAL 4-21-54	21	5	S	4	W	4301332378	13907	Oil Well	Producing
UTE TRIBAL 9-20-54	20	5	S	4	W	4301332379	13906	Oil Well	Producing
UTE TRIBAL 5-30-54	30	5	S	4	W	4301332380	13905	Oil Well	Producing
UTE TRIBAL 9-30-54	30	5	S	4	W	4301332383	14050	Oil Well	Producing
UTE TRIBAL 12-21-54	21	5	S	4	W	4301332385	13928	Oil Well	Producing
UTE TRIBAL 15-20-54	20	5	S	4	W	4301332386	13911	Oil Well	Producing
UTE TRIBAL 13-28-54	28	5	S	4	W	4301332387	13908	Oil Well	Producing
UTE TRIBAL 9-28-54	28	5	S	4	W	4301332388	13910	Oil Well	Producing
UTE TRIBAL 15-28-54	28	5	S	4	W	4301332389	13909	Oil Well	Producing
UTE TRIBAL 9-25-55	25	5	S	5	W	4301332390	13715	Oil Well	Producing
MOON TRIBAL 6-27-54	27	5	S	4	W	4301332407	13969	Oil Well	Producing
MOON TRIBAL 14-27-54	27	5	S	4	W	4301332408	13998	Oil Well	Producing
UTE TRIBAL 3-32-54	32	5	S	4	W	4301332410	13949	Oil Well	Producing
UTE TRIBAL 7-32-54	32	5	S	4	W	4301332411	13936	Oil Well	Producing
UTE TRIBAL 7-33-54	33	5	S	4	W	4301332413	13945	Oil Well	Producing
UTE TRIBAL 11-20-55	20	5	S	5	W	4301332415	14269	Oil Well	Producing
UTE TRIBAL 1-27-55	27	5	S	5	W	4301332416	13947	Oil Well	Producing
UTE TRIBAL 3-27-55	27	5	S	5	W	4301332417	14022	Oil Well	Producing
UTE TRIBAL 7-27-55	27	5	S	5	W	4301332418	13948	Oil Well	Producing
UTE TRIBAL 10-28-55	28	5	S	5	W	4301332419	14580	Oil Well	Producing
UTE TRIBAL 6-32-55	32	5	S	5	W	4301332420	14895	Oil Well	Producing
UTE TRIBAL 8-32-55	32	5	S	5	W	4301332421	14896	Oil Well	Producing
UTE TRIBAL 2-36-55	36	5	S	5	W	4301332422	13937	Oil Well	Producing
UTE TRIBAL 8-36-55	36	5	S	5	W	4301332423	14021	Oil Well	Producing
UTE TRIBAL 13-16-54	16	5	S	4	W	4301332511	13981	Oil Well	Producing
UTE TRIBAL 11-30-54	30	5	S	4	W	4301332512	13982	Oil Well	Producing
UTE TRIBAL 13-23-55	23	5	S	5	W	4301332513	13975	Oil Well	Producing
UTE TRIBAL 7-23-55	23	5	S	5	W	4301332514	13976	Oil Well	Producing
UTE TRIBAL 5-33-54	33	5	S	4	W	4301332521	14060	Oil Well	Producing
UTE TRIBAL 11-33-54	33	5	S	4	W	4301332522	14061	Oil Well	Producing
UTE TRIBAL 14-32-54	32	5	S	4	W	4301332523	14062	Oil Well	Producing
UTE TRIBAL 1-23-55	23	5	S	5	W	4301332524	14044	Oil Well	Producing
UTE TRIBAL 5-29-54	29	5	S	4	W	4301332525	14045	Oil Well	Producing
UTE TRIBAL 1-31-54	31	5	S	4	W	4301332526	14116	Oil Well	Producing
UTE TRIBAL 3-31-54	31	5	S	4	W	4301332527	14109	Oil Well	Producing
UTE TRIBAL 7-31-54	31	5	S	4	W	4301332528	14160	Oil Well	Producing
UTE TRIBAL 9-31-54	31	5	S	4	W	4301332529	14177	Oil Well	Producing
UTE TRIBAL 11-31-54	31	5	S	4	W	4301332530	14163	Oil Well	Producing
UTE TRIBAL 3-23-55	23	5	S	5	W	4301332536	14077	Oil Well	Producing
UTE TRIBAL 5-23-55	23	5	S	5	W	4301332537	14108	Oil Well	Producing
UTE TRIBAL 9-32-54	32	5	S	4	W	4301332538	14199	Oil Well	Producing
UTE TRIBAL 5-32-54	32	5	S	4	W	4301332539	14112	Oil Well	Producing

Well Transfer
From: Linn Operating, Inc.
To: Linn Operation, LLC
Effective: 3/1/2017

MOON TRIBAL 10-27-54	27	5	S	4	W	4301332540	14195	Oil Well	Producing
MOON TRIBAL 12-27-54	27	5	S	4	W	4301332541	14161	Oil Well	Producing
MOON TRIBAL 8-27-54	27	5	S	4	W	4301332543	14139	Oil Well	Producing
UTE TRIBAL 9-33-54	33	5	S	4	W	4301332549	14162	Oil Well	Producing
WILLIAMSON TRIBAL 3-34-54	34	5	S	4	W	4301332550	14222	Oil Well	Producing
WILLIAMSON TRIBAL 5-34-54	34	5	S	4	W	4301332551	14235	Oil Well	Producing
FEDERAL 6-2-65	2	6	S	5	W	4301332557	14655	Oil Well	Producing
UTE TRIBAL 15-29-54	29	5	S	4	W	4301332561	14316	Oil Well	Producing
UTE TRIBAL 7-29-54	29	5	S	4	W	4301332562	14354	Oil Well	Producing
UTE TRIBAL 11-29-54	29	5	S	4	W	4301332563	14337	Oil Well	Producing
UTE TRIBAL 13-29-54	29	5	S	4	W	4301332564	14315	Oil Well	Producing
UTE TRIBAL 4-29-54	29	5	S	4	W	4301332565	14367	Oil Well	Producing
UTE TRIBAL 1-35-54	35	5	S	4	W	4301332567	14266	Oil Well	Producing
UTE TRIBAL 11-13-54	13	5	S	4	W	4301332568	14281	Oil Well	Producing
UTE TRIBAL 2-24-54	24	5	S	4	W	4301332569	14314	Oil Well	Producing
UTE TRIBAL 13-18-54	18	5	S	4	W	4301332571	14388	Oil Well	Producing
UTE TRIBAL 12-29-54	29	5	S	4	W	4301332572	14336	Oil Well	Producing
UTE TRIBAL 4-24-54	24	5	S	4	W	4301332573	14247	Oil Well	Producing
UTE TRIBAL 6-14-54	14	5	S	4	W	4301332586	15270	Oil Well	Producing
UTE TRIBAL 10-15-54	15	5	S	4	W	4301332587	14194	Oil Well	Producing
UTE TRIBAL 16-15-54	15	5	S	4	W	4301332588	14311	Oil Well	Producing
UTE TRIBAL 11-16-54	16	5	S	4	W	4301332589	14178	Oil Well	Producing
UTE TRIBAL 8-22-54	22	5	S	4	W	4301332590	14219	Oil Well	Producing
UTE TRIBAL 2-22-54	22	5	S	4	W	4301332591	14328	Oil Well	Producing
UTE TRIBAL 10-22-54	22	5	S	4	W	4301332592	14218	Oil Well	Producing
UTE TRIBAL 14-22-54	22	5	S	4	W	4301332593	14220	Oil Well	Producing
UTE TRIBAL 13-13-55	13	5	S	5	W	4301332599	15134	Oil Well	Producing
UTE TRIBAL 13-14-55	14	5	S	5	W	4301332600	14236	Oil Well	Producing
UTE TRIBAL 13-15-55	15	5	S	5	W	4301332602	14263	Oil Well	Producing
UTE TRIBAL 10-21-55	21	5	S	5	W	4301332603	14385	Oil Well	Producing
UTE TRIBAL 2-22-55	22	5	S	5	W	4301332604	14268	Oil Well	Producing
UTE TRIBAL 3-22-55	22	5	S	5	W	4301332605	14298	Oil Well	Producing
UTE TRIBAL 9-22-55	22	5	S	5	W	4301332606	14330	Oil Well	Producing
UTE TRIBAL 11-22-55	22	5	S	5	W	4301332607	14329	Oil Well	Producing
MOON TRIBAL 3-27-54	27	5	S	4	W	4301332613	14416	Oil Well	Producing
UTE TRIBAL 5-27-55	27	5	S	5	W	4301332614	14881	Oil Well	Producing
UTE TRIBAL 11-27-55	27	5	S	5	W	4301332615	14882	Oil Well	Producing
UTE TRIBAL 12-22-55	22	5	S	5	W	4301332616	14370	Oil Well	Producing
UTE TRIBAL 15-22-55	22	5	S	5	W	4301332617	14921	Oil Well	Producing
UTE TRIBAL 8-25-55	25	5	S	5	W	4301332620	14365	Oil Well	Producing
UTE TRIBAL 4-20-54	20	5	S	4	W	4301332621	14518	Oil Well	Producing
UTE TRIBAL 6-20-54	20	5	S	4	W	4301332622	14382	Oil Well	Producing
UTE TRIBAL 5-22-54	22	5	S	4	W	4301332624	14547	Oil Well	Producing
UTE TRIBAL 3-30-54	30	5	S	4	W	4301332625	14364	Oil Well	Producing
UTE TRIBAL 3-10-54	10	5	S	4	W	4301332663	14414	Oil Well	Producing

Well Transfer
From: Linn Operating, Inc.
To: Linn Operation, LLC
Effective: 3/1/2017

UTE TRIBAL 15-32-54	32	5	S	4	W	4301332666	14460	Oil Well	Producing
UTE TRIBAL 8-31-55	31	5	S	5	W	4301332673	14407	Oil Well	Producing
UTE TRIBAL 3-35-54	35	5	S	4	W	4301332675	14656	Oil Well	Producing
UTE TRIBAL 2-30-55	30	5	S	5	W	4301332680	14427	Oil Well	Producing
BROWN 3-4A2	4	1	S	2	W	4301332684	14673	Oil Well	Producing
UTE TRIBAL 9-17-54	17	5	S	4	W	4301332687	15309	Oil Well	Producing
UTE TRIBAL 13-31-54	31	5	S	4	W	4301332688	14517	Oil Well	Producing
UTE TRIBAL 14-19-54	19	5	S	4	W	4301332690	14546	Oil Well	Producing
UTE TRIBAL 16-19-54	19	5	S	4	W	4301332691	14491	Oil Well	Producing
UTE TRIBAL 13-32-54	32	5	S	4	W	4301332692	14490	Oil Well	Producing
UTE TRIBAL 11-14-55	14	5	S	5	W	4301332693	15136	Oil Well	Producing
UTE TRIBAL 8-28-55	28	5	S	5	W	4301332694	14574	Oil Well	Producing
FEDERAL 6-1-65	1	6	S	5	W	4301332699	15776	Oil Well	Producing
UTE TRIBAL 9-15-55	15	5	S	5	W	4301332701	14573	Oil Well	Producing
UTE TRIBAL 14-20-54	20	5	S	4	W	4301332702	14459	Oil Well	Producing
#1 DLB 12-15-56	15	5	S	6	W	4301332710	14943	Gas Well	Producing
UTE TRIBAL 12-19-54	19	5	S	4	W	4301332716	14627	Oil Well	Producing
UTE TRIBAL 10-19-54	19	5	S	4	W	4301332717	14628	Oil Well	Producing
UTE TRIBAL 16-30-54	30	5	S	4	W	4301332718	14604	Oil Well	Producing
UTE TRIBAL 11-12-55	12	5	S	5	W	4301332721	14605	Oil Well	Producing
NIELSEN MARSING 13-14-56	14	5	S	6	W	4301332737	15060	Oil Well	Producing
TAYLOR HERRICK 10-22-56	22	5	S	6	W	4301332738	15058	Oil Well	Producing
UTE TRIBAL 16-20-54	20	5	S	4	W	4301332739	14671	Oil Well	Producing
UTE TRIBAL 10-20-54	20	5	S	4	W	4301332740	14691	Oil Well	Producing
UTE TRIBAL 4-28-54	28	5	S	4	W	4301332741	14672	Oil Well	Producing
UTE TRIBAL 13-33-54	33	5	S	4	W	4301332742	14736	Oil Well	Producing
UTE TRIBAL 15-31-54	31	5	S	4	W	4301332743	14690	Oil Well	Producing
UTE TRIBAL 8-30-54	30	5	S	4	W	4301332746	15583	Oil Well	Producing
UTE TRIBAL 10-25-55	25	5	S	5	W	4301332749	14758	Oil Well	Producing
UTE TRIBAL 14-25-55	25	5	S	5	W	4301332750	14798	Oil Well	Producing
UTE TRIBAL 3-36-55	36	5	S	5	W	4301332751	14842	Oil Well	Producing
UTE TRIBAL 16-16-55	16	5	S	5	W	4301332757	14865	Oil Well	Producing
UTE TRIBAL 3-21-55	21	5	S	5	W	4301332758	15112	Oil Well	Producing
UTE TRIBAL 16-25-55	25	5	S	5	W	4301332759	14821	Oil Well	Producing
UTE TRIBAL 1-36-55	36	5	S	5	W	4301332760	14822	Oil Well	Producing
UTE TRIBAL 7-22-54	22	5	S	4	W	4301332761	15661	Oil Well	Producing
UTE TRIBAL 2-31-54	31	5	S	4	W	4301332762	14845	Oil Well	Producing
UTE TRIBAL 2-28-54	28	5	S	4	W	4301332763	14723	Oil Well	Producing
UTE TRIBAL 10-28-54	28	5	S	4	W	4301332764	14722	Oil Well	Producing
UTE TRIBAL 12-28-54	28	5	S	4	W	4301332765	14701	Oil Well	Producing
UTE TRIBAL 8-28-54	28	5	S	4	W	4301332766	14777	Oil Well	Producing
UTE TRIBAL 4-31-54	31	5	S	4	W	4301332767	14494	Oil Well	Producing
UTE TRIBAL 15-33-54	33	5	S	4	W	4301332768	15210	Oil Well	Producing
UTE TRIBAL 12-25-55	25	5	S	5	W	4301332769	14799	Oil Well	Producing
UTE TRIBAL 7-35-54	35	5	S	4	W	4301332774	15019	Oil Well	Producing

Well Transfer
From: Linn Operating, Inc.
To: Linn Operation, LLC
Effective: 3/1/2017

UTE TRIBAL 16-24-54	24	5	S	4	W	4301332775	14762	Oil Well	Producing
UTE TRIBAL 14-25-54	25	5	S	4	W	4301332776	14753	Oil Well	Producing
UTE TRIBAL 16-25-54	25	5	S	4	W	4301332779	15078	Oil Well	Producing
UTE TRIBAL 8-25-54	25	5	S	4	W	4301332780	15280	Oil Well	Producing
UTE TRIBAL 9-35-54	35	5	S	4	W	4301332781	15535	Oil Well	Producing
UTE TRIBAL 6-30-55	30	5	S	5	W	4301332783	15163	Oil Well	Producing
MOON TRIBAL 4-23-54	23	5	S	4	W	4301332800	14985	Oil Well	Producing
MOON TRIBAL 5-27-54	27	5	S	4	W	4301332802	14984	Oil Well	Producing
UTE TRIBAL 2-32-54	32	5	S	4	W	4301332803	15151	Oil Well	Producing
UTE TRIBAL 15-35-54	35	5	S	4	W	4301332804	15185	Oil Well	Producing
UTE TRIBAL 5-35-54	35	5	S	4	W	4301332805	15485	Oil Well	Producing
UTE TRIBAL 13-35-54	35	5	S	4	W	4301332806	15292	Oil Well	Producing
UTE TRIBAL 11-35-54	35	5	S	4	W	4301332807	15317	Oil Well	Producing
UTE TRIBAL 8-19-54	19	5	S	4	W	4301332840	14946	Oil Well	Producing
UTE TRIBAL 13-20-55	20	5	S	5	W	4301332841	15097	Oil Well	Producing
UTE TRIBAL 16-22-54	22	5	S	4	W	4301332842	15015	Oil Well	Producing
MOON TRIBAL 6-23-54	23	5	S	4	W	4301332843	15113	Oil Well	Producing
UTE TRIBAL 11-26-54	26	5	S	4	W	4301332844	15233	Oil Well	Producing
MOON TRIBAL 15-27-54	27	5	S	4	W	4301332846	15115	Oil Well	Producing
UTE TRIBAL 10-31-54	31	5	S	4	W	4301332847	14956	Oil Well	Producing
ST TRIBAL 6-15-54	15	5	S	4	W	4301332848	16656	Oil Well	Producing
ST TRIBAL 2-15-54	15	5	S	4	W	4301332849	16959	Oil Well	Producing
ST TRIBAL 4-15-54	15	5	S	4	W	4301332850	17478	Oil Well	Producing
ST TRIBAL 8-15-54	15	5	S	4	W	4301332851	16279	Oil Well	Producing
UTE TRIBAL 11-25-54	25	5	S	4	W	4301332856	15430	Oil Well	Producing
UTE TRIBAL 3-30-55	30	5	S	5	W	4301332862	15340	Oil Well	Producing
UTE TRIBAL 7-19-55	19	5	S	5	W	4301332863	15279	Oil Well	Producing
UTE TRIBAL 8-19-55	19	5	S	5	W	4301332864	15241	Oil Well	Producing
UTE TRIBAL 6-19-54	19	5	S	4	W	4301332865	14947	Oil Well	Producing
UTE TRIBAL 12-20-54	20	5	S	4	W	4301332866	14924	Oil Well	Producing
UTE TRIBAL 3-21-54	21	5	S	4	W	4301332867	15554	Oil Well	Producing
UTE TRIBAL 2-26-54	26	5	S	4	W	4301332868	15231	Oil Well	Producing
UTE TRIBAL 8-31-54	31	5	S	4	W	4301332869	14970	Oil Well	Producing
UTE TRIBAL 8-32-54	32	5	S	4	W	4301332870	15152	Oil Well	Producing
UTE TRIBAL 4-33-54	33	5	S	4	W	4301332871	15040	Oil Well	Producing
UTE TRIBAL 6-33-54	33	5	S	4	W	4301332872	15059	Oil Well	Producing
UTE TRIBAL 9-22-54	22	5	S	4	W	4301332889	15607	Oil Well	Producing
UTE TRIBAL 5-26-54	26	5	S	4	W	4301332890	15268	Oil Well	Producing
UTE TRIBAL 13-26-54	26	5	S	4	W	4301332891	15287	Oil Well	Producing
UTE TRIBAL 6-28D-54	28	5	S	4	W	4301332892	15232	Oil Well	Producing
UTE TRIBAL 2-30D-54	30	5	S	4	W	4301332894	15298	Oil Well	Producing
UTE TRIBAL 4-32-54	32	5	S	4	W	4301332896	15555	Oil Well	Producing
UTE TRIBAL 6-32D-54	32	5	S	4	W	4301332897	15312	Oil Well	Producing
UTE TRIBAL 2-33D-54	33	5	S	4	W	4301332898	15271	Oil Well	Producing
UTE TRIBAL 12-32-54	32	5	S	4	W	4301332925	15503	Oil Well	Producing

Well Transfer
From: Linn Operating, Inc.
To: Linn Operation, LLC
Effective: 3/1/2017

UTE TRIBAL 16-32D-54	32	5	S	4	W	4301332926	16971	Oil Well	Producing
MOON TRIBAL 16-23-54	23	5	S	4	W	4301332927	15219	Oil Well	Producing
UTE TRIBAL 4-25-55	25	5	S	5	W	4301332928	15421	Oil Well	Producing
UTE TRIBAL 7-36-55	36	5	S	5	W	4301332929	15341	Oil Well	Producing
UTE TRIBAL 5-36-55	36	5	S	5	W	4301332930	15301	Oil Well	Producing
MOON TRIBAL 10-2-54	2	5	S	4	W	4301332931	15429	Oil Well	Producing
MYRIN TRIBAL 16-19-55	19	5	S	5	W	4301332934	15339	Oil Well	Producing
UTE TRIBAL 2-31-55	31	5	S	5	W	4301332935	15428	Oil Well	Producing
UTE TRIBAL 10-31-55	31	5	S	5	W	4301332936	15354	Oil Well	Producing
MOON TRIBAL 1-27-54	27	5	S	4	W	4301332937	15308	Oil Well	Producing
MOON TRIBAL 5-23-54	23	5	S	4	W	4301332938	15584	Oil Well	Producing
ST TRIBAL 7-18-54	18	5	S	4	W	4301332952	15724	Oil Well	Producing
ST TRIBAL 5-18-54	18	5	S	4	W	4301332953	15781	Oil Well	Producing
UTE TRIBAL 15-15-54	15	5	S	4	W	4301332971	15310	Oil Well	Producing
UTE TRIBAL 4-19-54	19	5	S	4	W	4301332972	15382	Oil Well	Producing
UTE TRIBAL 8-20-54	20	5	S	4	W	4301332973	15245	Oil Well	Producing
UTE TRIBAL 2-20-54	20	5	S	4	W	4301332974	15269	Oil Well	Producing
UTE TRIBAL 7-15-55	15	5	S	5	W	4301332976	15311	Oil Well	Producing
UTE TRIBAL 10-15-55	15	5	S	5	W	4301332977	15380	Oil Well	Producing
UTE TRIBAL 1-15-55	15	5	S	5	W	4301332978	15299	Oil Well	Producing
UTE TRIBAL 14-15-55	15	5	S	5	W	4301332979	15369	Oil Well	Producing
UTE TRIBAL 11-15-55	15	5	S	5	W	4301332980	15342	Oil Well	Producing
UTE TRIBAL 14-18-55	18	5	S	5	W	4301332984	15671	Oil Well	Producing
UTE TRIBAL 14-24-56	24	5	S	6	W	4301332988	15740	Oil Well	Producing
UTE TRIBAL 7-24-56	24	5	S	6	W	4301332989	15782	Oil Well	Producing
UTE TRIBAL 11-25-56	25	5	S	6	W	4301332990	15627	Oil Well	Producing
UTE TRIBAL 7-25-56	25	5	S	6	W	4301332991	15617	Oil Well	Producing
UTE TRIBAL 5-25-56	25	5	S	6	W	4301332992	15648	Oil Well	Producing
UTE TRIBAL 3-25-56	25	5	S	6	W	4301332993	15561	Oil Well	Producing
UTE TRIBAL 13-15D-54	15	5	S	4	W	4301333039	15368	Oil Well	Producing
UTE TRIBAL 16-28D-54	28	5	S	4	W	4301333041	15377	Oil Well	Producing
UTE TRIBAL 14-31D-54	31	5	S	4	W	4301333042	15419	Oil Well	Producing
UTE TRIBAL 4-22-55	22	5	S	5	W	4301333044	15381	Oil Well	Producing
UTE TRIBAL 16-23-55	23	5	S	5	W	4301333046	15211	Oil Well	Producing
UTE TRIBAL 9-35-55	35	5	S	5	W	4301333047	15378	Oil Well	Producing
UTE TRIBAL 7-35-55	35	5	S	5	W	4301333048	15367	Oil Well	Producing
UTE TRIBAL 15-36-55	36	5	S	5	W	4301333049	15379	Oil Well	Producing
UTE TRIBAL 10-12-55	12	5	S	5	W	4301333055	15618	Oil Well	Producing
UTE TRIBAL 5-13-54	13	5	S	4	W	4301333075	15873	Oil Well	Producing
UTE TRIBAL 16-29-54	29	5	S	4	W	4301333076	17074	Oil Well	Producing
UTE TRIBAL 12-18-54	18	5	S	4	W	4301333077	15575	Oil Well	Producing
UTE TRIBAL 8-33-54	33	5	S	4	W	4301333089	15398	Oil Well	Producing
UTE TRIBAL 12-33-54	33	5	S	4	W	4301333090	15417	Oil Well	Producing
UTE TRIBAL 16-33-54	33	5	S	4	W	4301333091	15397	Oil Well	Producing
UTE TRIBAL 10-33-54	33	5	S	4	W	4301333092	15418	Oil Well	Producing

Well Transfer
From: Linn Operating, Inc.
To: Linn Operation, LLC
Effective: 3/1/2017

UTE TRIBAL 14-33-54	33	5	S	4	W	4301333093	15399	Oil Well	Producing
UTE TRIBAL 2-14-54	14	5	S	4	W	4301333111	16832	Oil Well	Producing
UTE TRIBAL 14-14-54	14	5	S	4	W	4301333112	15440	Oil Well	Producing
UTE TRIBAL 13-21-54	21	5	S	4	W	4301333113	15471	Oil Well	Producing
UTE TRIBAL 11-21-54	21	5	S	4	W	4301333115	15470	Oil Well	Producing
UTE TRIBAL 11-22-54	22	5	S	4	W	4301333116	15662	Oil Well	Producing
UTE TRIBAL 2-21-55	21	5	S	5	W	4301333117	15582	Oil Well	Producing
UTE TRIBAL 4-28-55	28	5	S	5	W	4301333118	15506	Oil Well	Producing
UTE TRIBAL 8-29-55	29	5	S	5	W	4301333119	15507	Oil Well	Producing
UTE TRIBAL 6-29-55	29	5	S	5	W	4301333120	15504	Oil Well	Producing
TAYLOR FEE 13-22-56	22	5	S	6	W	4301333121	15525	Oil Well	Producing
WILCOX ELIASON 7-15-56	15	5	S	6	W	4301333122	15526	Oil Well	Producing
UTE TRIBAL 14-16-54	16	5	S	4	W	4301333123	15639	Oil Well	Producing
UTE TRIBAL 1-16-54	16	5	S	4	W	4301333128	15420	Oil Well	Producing
UTE TRIBAL 10-16-54	16	5	S	4	W	4301333129	15454	Oil Well	Producing
UTE TRIBAL 7-16-54	16	5	S	4	W	4301333130	15455	Oil Well	Producing
UTE TRIBAL 12-16-54	16	5	S	4	W	4301333131	15456	Oil Well	Producing
UTE TRIBAL 16-17-54	17	5	S	4	W	4301333132	15524	Oil Well	Producing
UTE TRIBAL 10-17-54	17	5	S	4	W	4301333133	15581	Oil Well	Producing
UTE TRIBAL 12-24D-55	24	5	S	5	W	4301333134	15567	Oil Well	Producing
WILCOX FEE 1-20-56	20	5	S	6	W	4301333150	15745	Oil Well	Producing
NIELSEN FEE 13-11-56	11	5	S	6	W	4301333152	15600	Oil Well	Producing
UTE TRIBAL 2-29-54	29	5	S	4	W	4301333153	15919	Oil Well	Producing
UTE TRIBAL 14-29-54	29	5	S	4	W	4301333154	15831	Oil Well	Producing
UTE TRIBAL 10-29-54	29	5	S	4	W	4301333155	15847	Oil Well	Producing
UTE TRIBAL 10-24D-55	24	5	S	5	W	4301333156	15556	Oil Well	Producing
UTE TRIBAL 10-29D-55	29	5	S	5	W	4301333157	15505	Oil Well	Producing
UTE TRIBAL 6-29-54	29	5	S	4	W	4301333172	15846	Oil Well	Producing
UTE TRIBAL 12Q-25-55	25	5	S	5	W	4301333184	15744	Oil Well	Producing
UTE TRIBAL 3G-31-54	31	5	S	4	W	4301333185	15746	Oil Well	Producing
UTE TRIBAL 1I-36-55	36	5	S	5	W	4301333186	15865	Oil Well	Producing
UTE TRIBAL 6-23D-55	23	5	S	5	W	4301333187	15996	Oil Well	Producing
UTE TRIBAL 8-14-54	14	5	S	4	W	4301333204	15656	Oil Well	Producing
UTE TRIBAL 10-14-54	14	5	S	4	W	4301333205	15680	Oil Well	Producing
UTE TRIBAL 11-15-54	15	5	S	4	W	4301333206	15643	Oil Well	Producing
UTE TRIBAL 9-16-54	16	5	S	4	W	4301333207	15660	Oil Well	Producing
UTE TRIBAL 3-22-54	22	5	S	4	W	4301333208	15640	Oil Well	Producing
UTE TRIBAL 15-13D-55	13	5	S	5	W	4301333212	15642	Oil Well	Producing
UTE TRIBAL 6-22D-55	22	5	S	5	W	4301333213	16831	Oil Well	Producing
UTE TRIBAL 11-36D-55	36	5	S	5	W	4301333214	15702	Oil Well	Producing
UTE TRIBAL 1-22D-54	22	5	S	4	W	4301333215	15641	Oil Well	Producing
BERRY TRIBAL 1-23-54	23	5	S	4	W	4301333216	15931	Oil Well	Producing
BERRY TRIBAL 15-23-54	23	5	S	4	W	4301333217	15932	Oil Well	Producing
UTE TRIBAL 9-36D-55	36	5	S	5	W	4301333239	15933	Oil Well	Producing
UTE TRIBAL 9S-25-55	25	5	S	5	W	4301333245	15962	Oil Well	Producing

Well Transfer
From: Linn Operating, Inc.
To: Linn Operation, LLC
Effective: 3/1/2017

UTE TRIBAL 12-32-55	32	5	S	5	W	4301333266	15681	Oil Well	Producing
UTE TRIBAL 16-22D-55	22	5	S	5	W	4301333267	15703	Oil Well	Producing
UTE TRIBAL 4-14D-54	14	5	S	4	W	4301333270	15679	Oil Well	Producing
UTE TRIBAL 9S-19-54	19	5	S	4	W	4301333276	16153	Oil Well	Producing
UTE TRIBAL 14Q-28-54	28	5	S	4	W	4301333277	15818	Oil Well	Producing
UTE TRIBAL 14-28D-54	28	5	S	4	W	4301333278	15817	Oil Well	Producing
UTE TRIBAL 1-14D-55	14	5	S	5	W	4301333279	18408	Oil Well	Producing
UTE TRIBAL 10-18-54	18	5	S	4	W	4301333300	15747	Oil Well	Producing
UTE TRIBAL 5-21-54	21	5	S	4	W	4301333324	15748	Oil Well	Producing
UTE TRIBAL 6-31D-54	31	5	S	4	W	4301333325	16185	Oil Well	Producing
UTE TRIBAL 16-31D-54	31	5	S	4	W	4301333326	15800	Oil Well	Producing
UTE TRIBAL 16-13D-55	13	5	S	5	W	4301333327	15891	Oil Well	Producing
UTE TRIBAL 9-13D-55	13	5	S	5	W	4301333328	15892	Oil Well	Producing
UTE TRIBAL 15-21-55	21	5	S	5	W	4301333357	15791	Oil Well	Producing
UTE TRIBAL 10-23D-55	23	5	S	5	W	4301333358	15799	Oil Well	Producing
UTE TRIBAL 9-26D-55	26	5	S	5	W	4301333359	15853	Oil Well	Producing
UTE TRIBAL 10-26D-55	26	5	S	5	W	4301333360	15852	Oil Well	Producing
UTE TRIBAL 14-26D-55	26	5	S	5	W	4301333361	15938	Oil Well	Producing
UTE TRIBAL 15-26D-55	26	5	S	5	W	4301333362	15869	Oil Well	Producing
UTE TRIBAL 3-32D-55	32	5	S	5	W	4301333363	15936	Oil Well	Producing
UTE TRIBAL 13-14-54	14	5	S	4	W	4301333364	15790	Oil Well	Producing
MOON TRIBAL 7-27D-54	27	5	S	4	W	4301333365	15935	Oil Well	Producing
UTE TRIBAL 4-32-55	32	5	S	5	W	4301333379	15819	Oil Well	Producing
UTE TRIBAL 13H-16-55	16	5	S	5	W	4301333380	18357	Oil Well	Producing
BERRY TRIBAL 7-23-54	23	5	S	4	W	4301333381	15934	Oil Well	Producing
BERRY TRIBAL 9-34-54	34	5	S	4	W	4301333382	16024	Oil Well	Producing
BERRY TRIBAL 7-34-54	34	5	S	4	W	4301333383	16102	Oil Well	Producing
BERRY TRIBAL 4-34-54	34	5	S	4	W	4301333384	16588	Oil Well	Producing
FEDERAL 2-2-65	2	6	S	5	W	4301333385	16150	Oil Well	Producing
FEDERAL 5-4-65	4	6	S	5	W	4301333387	17599	Oil Well	Producing
UTE TRIBAL 1A-29-54	29	5	S	4	W	4301333393	17075	Oil Well	Producing
BERRY TRIBAL 15-34-54	34	5	S	4	W	4301333411	16037	Oil Well	Producing
BERRY TRIBAL 8-23D-54	23	5	S	4	W	4301333417	16101	Oil Well	Producing
UTE TRIBAL 12-29D-55	29	5	S	5	W	4301333418	17307	Oil Well	Producing
UTE TRIBAL 8-24-55	24	5	S	5	W	4301333420	15997	Oil Well	Producing
UTE TRIBAL 5-25D-55	25	5	S	5	W	4301333421	16589	Oil Well	Producing
BERRY TRIBAL 10-34D-54	34	5	S	4	W	4301333422	16038	Oil Well	Producing
1-15-56 DLB	15	5	S	6	W	4301333447	15854	Oil Well	Producing
FEDERAL 5-3-64	3	6	S	4	W	4301333448	16098	Oil Well	Producing
FEDERAL 8-1-64	1	6	S	4	W	4301333449	16152	Oil Well	Producing
FEDERAL 5-4-64	4	6	S	4	W	4301333450	17851	Oil Well	Producing
FEDERAL 11-10-65	10	6	S	5	W	4301333451	16281	Oil Well	Producing
BERRY TRIBAL 9-23-54	23	5	S	4	W	4301333465	16590	Oil Well	Producing
UTE TRIBAL 6-26D-55	26	5	S	5	W	4301333476	16657	Oil Well	Producing
UTE TRIBAL 7-26D-55	26	5	S	5	W	4301333477	16658	Oil Well	Producing

Well Transfer
From: Linn Operating, Inc.
To: Linn Operation, LLC
Effective: 3/1/2017

UTE TRIBAL 11-26D-55	26	5	S	5	W	4301333478	16659	Oil Well	Producing
UTE TRIBAL 14Q-30-54	30	5	S	4	W	4301333479	16151	Oil Well	Producing
FEDERAL 5-6-65	6	6	S	5	W	4301333489	17852	Oil Well	Producing
FEDERAL 16-5-65	5	6	S	5	W	4301333490	16833	Oil Well	Producing
FEDERAL 6-11-65	11	6	S	5	W	4301333491	16335	Oil Well	Producing
LC TRIBAL 14-2-56	2	5	S	6	W	4301333492	18358	Oil Well	Producing
UTE TRIBAL 1-31-55	31	5	S	5	W	4301333501	17104	Oil Well	Producing
UTE TRIBAL 9-31-55	31	5	S	5	W	4301333508	17103	Oil Well	Producing
BERRY TRIBAL 11-34D-54	34	5	S	4	W	4301333529	16099	Oil Well	Producing
LC TRIBAL 2-16D-56	16	5	S	6	W	4301333538	17305	Oil Well	Producing
LC TRIBAL 4-16-56	16	5	S	6	W	4301333539	16272	Oil Well	Producing
LC TRIBAL 3-17-56	17	5	S	6	W	4301333541	16459	Oil Well	Producing
UTE TRIBAL 4-20D-55	20	5	S	5	W	4301333549	18075	Oil Well	Producing
UTE TRIBAL 8-23D-55	23	5	S	5	W	4301333552	16662	Oil Well	Producing
LC TRIBAL 8-28-46	28	4	S	6	W	4301333576	16155	Oil Well	Producing
LC TRIBAL 7-3-56	3	5	S	6	W	4301333577	16379	Oil Well	Producing
LC TRIBAL 3-5-56	5	5	S	6	W	4301333580	17082	Oil Well	Producing
FEDERAL 8-2D-64	2	6	S	4	W	4301333581	16100	Oil Well	Producing
LC TRIBAL 13H-3-56	3	5	S	6	W	4301333591	18129	Oil Well	Producing
LC FEE 6-12-57	12	5	S	7	W	4301333593	17083	Oil Well	Producing
UTE TRIBAL 4-26D-54	26	5	S	4	W	4301333595	16591	Oil Well	Producing
LC FEE 12H-6-56	6	5	S	6	W	4301333606	18037	Oil Well	Producing
LC TRIBAL 7-7D-56	7	5	S	6	W	4301333607	18038	Oil Well	Producing
LC TRIBAL 1-9-56	9	5	S	6	W	4301333608	16380	Oil Well	Producing
UTE TRIBAL 5-14-54	14	5	S	4	W	4301333619	16945	Oil Well	Producing
UTE TRIBAL 10-26D-54	26	5	S	4	W	4301333620	16663	Oil Well	Producing
UTE TRIBAL 7-26D-54	26	5	S	4	W	4301333621	16664	Oil Well	Producing
UTE TRIBAL 13-36D-55	36	5	S	5	W	4301333624	17744	Oil Well	Producing
UTE TRIBAL 6-26D-54	26	5	S	4	W	4301333625	16619	Oil Well	Producing
UTE TRIBAL 1-22D-55	22	5	S	5	W	4301333626	16777	Oil Well	Producing
UTE TRIBAL 4-23D-55	23	5	S	5	W	4301333627	16818	Oil Well	Producing
UTE TRIBAL 2-27D-55	27	5	S	5	W	4301333628	16746	Oil Well	Producing
UTE TRIBAL 12-28D-55	28	5	S	5	W	4301333645	17999	Oil Well	Producing
UTE TRIBAL 13-28D-55	28	5	S	5	W	4301333646	18000	Oil Well	Producing
UTE TRIBAL 14-26D-54	26	5	S	4	W	4301333673	16299	Oil Well	Producing
UTE FEE 7-13D-55	13	5	S	5	W	4301333674	18089	Oil Well	Producing
UTE TRIBAL 9-20D-55	20	5	S	5	W	4301333675	17309	Oil Well	Producing
LC TRIBAL 11-17-56	17	5	S	6	W	4301333677	17600	Oil Well	Producing
UTE TRIBAL 1-26D-54	26	5	S	4	W	4301333680	16638	Oil Well	Producing
UTE TRIBAL 3-26D-54	26	5	S	4	W	4301333681	16665	Oil Well	Producing
UTE TRIBAL 8-26D-54	26	5	S	4	W	4301333682	17031	Oil Well	Producing
UTE TRIBAL 10-27D-55	27	5	S	5	W	4301333683	16666	Oil Well	Producing
UTE TRIBAL 14-27D-55	27	5	S	5	W	4301333684	16667	Oil Well	Producing
UTE TRIBAL 12-21D-55	21	5	S	5	W	4301333694	16296	Oil Well	Producing
UTE TRIBAL 5-21D-55	21	5	S	5	W	4301333706	16298	Oil Well	Producing

Well Transfer
From: Linn Operating, Inc.
To: Linn Operation, LLC
Effective: 3/1/2017

UTE TRIBAL 2-29D-55	29	5	S	5	W	4301333714	16854	Oil Well	Producing
UTE TRIBAL 7-29D-55	29	5	S	5	W	4301333715	16853	Oil Well	Producing
UTE TRIBAL 13-22D-55	22	5	S	5	W	4301333716	16668	Oil Well	Producing
UTE TRIBAL 14-22D-55	22	5	S	5	W	4301333717	16669	Oil Well	Producing
UTE TRIBAL 7-22D-55	22	5	S	5	W	4301333721	16670	Oil Well	Producing
UTE TRIBAL 10-22D-55	22	5	S	5	W	4301333722	16671	Oil Well	Producing
UTE TRIBAL 3-29-55	29	5	S	5	W	4301333723	16857	Oil Well	Producing
BERRY TRIBAL 10-23D-54	23	5	S	4	W	4301333724	16592	Oil Well	Producing
BERRY TRIBAL 11-23D-54	23	5	S	4	W	4301333725	16672	Oil Well	Producing
UTE TRIBAL 4-24D-55	24	5	S	5	W	4301333726	16673	Oil Well	Producing
FEDERAL 6-6D-64	6	6	S	4	W	4301333745	17084	Oil Well	Producing
UTE TRIBAL 15-26D-54	26	5	S	4	W	4301333768	17450	Oil Well	Producing
UTE TRIBAL 1-14D-54	14	5	S	4	W	4301333769	17483	Oil Well	Producing
UTE TRIBAL 12-35D-55	35	5	S	5	W	4301333782	16856	Oil Well	Producing
UTE TRIBAL 11-35-55	35	5	S	5	W	4301333783	16855	Oil Well	Producing
UTE TRIBAL 1-28D-55	28	5	S	5	W	4301333784	16852	Oil Well	Producing
UTE TRIBAL 16-27D-55	27	5	S	5	W	4301333786	17800	Oil Well	Producing
UTE TRIBAL 9-28D-55	28	5	S	5	W	4301333787	16887	Oil Well	Producing
UTE TRIBAL 7-28D-55	28	5	S	5	W	4301333788	16886	Oil Well	Producing
UTE TRIBAL 11-32D-54	32	5	S	4	W	4301333793	17003	Oil Well	Producing
UTE TRIBAL 9-14D-54	14	5	S	4	W	4301333796	17482	Oil Well	Producing
UTE TRIBAL 4-27D-55	27	5	S	5	W	4301333797	16700	Oil Well	Producing
FOY TRIBAL 12H-33-55	33	5	S	5	W	4301333799	18232	Oil Well	Producing
UTE TRIBAL 9-32D-55	32	5	S	5	W	4301333800	18361	Oil Well	Producing
UTE TRIBAL 12-26D-54	26	5	S	4	W	4301333801	16639	Oil Well	Producing
UTE TRIBAL 8-26D-55	26	5	S	5	W	4301333859	17859	Oil Well	Producing
BERRY TRIBAL 2-34D-54	34	5	S	4	W	4301333867	17889	Oil Well	Producing
UTE TRIBAL 3-35D-55	35	5	S	5	W	4301333888	17421	Oil Well	Producing
UTE TRIBAL 10-32-54	32	5	S	4	W	4301333902	16819	Oil Well	Producing
UTE TRIBAL 12-31D-54	31	5	S	4	W	4301333907	17480	Oil Well	Producing
UTE TRIBAL 12-23D-55	23	5	S	5	W	4301333908	17814	Oil Well	Producing
UTE TRIBAL 14-20D-55	20	5	S	5	W	4301333909	18559	Oil Well	Producing
UTE TRIBAL 6-20D-55	20	5	S	5	W	4301333910	18481	Oil Well	Producing
UTE TRIBAL 12-20-55	20	5	S	5	W	4301333911	18520	Oil Well	Producing
UTE TRIBAL 14-24D-55	24	5	S	5	W	4301333912	16943	Oil Well	Producing
UTE TRIBAL 14-23D-55	23	5	S	5	W	4301333915	17457	Oil Well	Producing
ST TRIBAL 1-15D-54	15	5	S	4	W	4301333916	16889	Oil Well	Producing
ST TRIBAL 7-15D-54	15	5	S	4	W	4301333950	16972	Oil Well	Producing
ST TRIBAL 9-15D-54	15	5	S	4	W	4301333951	16973	Oil Well	Producing
UTE TRIBAL 15-35D-55	35	5	S	5	W	4301333954	17417	Oil Well	Producing
UTE TRIBAL 14-35D-55	35	5	S	5	W	4301333955	17416	Oil Well	Producing
UTE TRIBAL 16-26D-55	26	5	S	5	W	4301333965	17418	Oil Well	Producing
FEDERAL 1-2D-65	2	6	S	5	W	4301333966	16888	Oil Well	Producing
UTE TRIBAL 1-35D-55	35	5	S	5	W	4301333967	17420	Oil Well	Producing
UTE TRIBAL 10-36D-55	36	5	S	5	W	4301333968	17743	Oil Well	Producing

Well Transfer
From: Linn Operating, Inc.
To: Linn Operation, LLC
Effective: 3/1/2017

UTE TRIBAL 4-26D-55	26	5	S	5	W	4301333978	17455	Oil Well	Producing
UTE TRIBAL 2-26D-55	26	5	S	5	W	4301333979	17456	Oil Well	Producing
BERRY TRIBAL 14-23D-54	23	5	S	4	W	4301333989	17903	Oil Well	Producing
FEDERAL 3-2D-65	2	6	S	5	W	4301334001	16944	Oil Well	Producing
UTE TRIBAL 13-26D-55	26	5	S	5	W	4301334002	17481	Oil Well	Producing
FEDERAL 7-1D-65	1	6	S	5	W	4301334015	17775	Oil Well	Producing
FEDERAL 2-2D-64	2	6	S	4	W	4301334018	17086	Oil Well	Producing
FEDERAL 7-6D-64	6	6	S	4	W	4301334020	17085	Oil Well	Producing
UTE TRIBAL 6-35D-55	35	5	S	5	W	4301334028	17785	Oil Well	Producing
UTE TRIBAL 16-26-54	26	5	S	4	W	4301334042	17413	Oil Well	Producing
BERRY TRIBAL 13-23-54	23	5	S	4	W	4301334043	17100	Oil Well	Producing
UTE TRIBAL 6-28D-55	28	5	S	5	W	4301334056	18593	Oil Well	Producing
UTE TRIBAL 11-28-55	28	5	S	5	W	4301334057	18001	Oil Well	Producing
UTE TRIBAL 8-27D-55	27	5	S	5	W	4301334058	17842	Oil Well	Producing
ST TRIBAL 3-15D-54	15	5	S	4	W	4301334059	17477	Oil Well	Producing
ST TRIBAL 5-15D-54	15	5	S	4	W	4301334060	17479	Oil Well	Producing
FEDERAL 7-11D-65	11	6	S	5	W	4301334061	17776	Oil Well	Producing
FEDERAL 7-3D-65	3	6	S	5	W	4301334065	17124	Oil Well	Producing
MOON TRIBAL 9-27D-54	27	5	S	4	W	4301334108	19095	Oil Well	Producing
MOON TRIBAL 16-27D-54	27	5	S	4	W	4301334109	17414	Oil Well	Producing
UTE TRIBAL 15-22D-54	22	5	S	4	W	4301334116	17415	Oil Well	Producing
UTE TRIBAL 13-35D-55	35	5	S	5	W	4301334117	18442	Oil Well	Producing
UTE TRIBAL 12-26D-55	26	5	S	5	W	4301334118	17786	Oil Well	Producing
FEDERAL 11-6D-64	6	6	S	4	W	4301334284	17615	Oil Well	Producing
FEDERAL 14-6D-64	6	6	S	4	W	4301334285	17616	Oil Well	Producing
FEDERAL 2-6D-64	6	6	S	4	W	4301334286	17663	Oil Well	Producing
FEDERAL 3-5D-64	5	6	S	4	W	4301334287	17617	Oil Well	Producing
FEDERAL 6-5D-64	5	6	S	4	W	4301334288	17649	Oil Well	Producing
SFW TRIBAL 10-10D-54	10	5	S	4	W	4301334295	17564	Oil Well	Producing
SFW TRIBAL 9-10D-54	10	5	S	4	W	4301334296	17565	Oil Well	Producing
GALLOWAY 3-11B2	11	2	S	2	W	4301334304	18527	Oil Well	Producing
STATE TRIBAL 16-10-54	10	5	S	4	W	4301350245	17553	Oil Well	Producing
UTE TRIBAL 6-14D-55	14	5	S	5	W	4301350246	17602	Oil Well	Producing
SFW FEE 15-10-54	10	5	S	4	W	4301350247	17566	Oil Well	Producing
FEDERAL 5-5D-64	5	6	S	4	W	4301350259	17648	Oil Well	Producing
LC TRIBAL 6-22D-56	22	5	S	6	W	4301350260	17567	Oil Well	Producing
FEDERAL 12-6D-64	6	6	S	4	W	4301350261	17618	Oil Well	Producing
FEDERAL 4-5D-64	5	6	S	4	W	4301350263	17661	Oil Well	Producing
FEDERAL 1-6-64	6	6	S	4	W	4301350266	17662	Oil Well	Producing
FEDERAL 4-6D-64	6	6	S	4	W	4301350267	17651	Oil Well	Producing
FEDERAL 3-6D-64	6	6	S	4	W	4301350268	17650	Oil Well	Producing
FEDERAL 5-6D-64	6	6	S	4	W	4301350269	17652	Oil Well	Producing
FEDERAL 8-6D-64	6	6	S	4	W	4301350325	17664	Oil Well	Producing
FEDERAL 10-1D-65	1	6	S	5	W	4301350326	18027	Oil Well	Producing
FEDERAL 11-1D-65	1	6	S	5	W	4301350327	18039	Oil Well	Producing

Well Transfer
From: Linn Operating, Inc.
To: Linn Operation, LLC
Effective: 3/1/2017

FEDERAL 12-1D-65	1	6	S	5	W	4301350328	18040	Oil Well	Producing
FEDERAL 13-1D-65	1	6	S	5	W	4301350329	18042	Oil Well	Producing
FEDERAL 14-1D-65	1	6	S	5	W	4301350330	18041	Oil Well	Producing
FEDERAL 13-5D-64	5	6	S	4	W	4301350337	17714	Oil Well	Producing
FEDERAL 14-5D-64	5	6	S	4	W	4301350338	17715	Oil Well	Producing
FEDERAL 9-1D-65	1	6	S	5	W	4301350342	18026	Oil Well	Producing
FEDERAL 13-6D-64	6	6	S	4	W	4301350347	17619	Oil Well	Producing
FEDERAL 11-5D-64	5	6	S	4	W	4301350348	17690	Oil Well	Producing
FEDERAL 12-5D-64	5	6	S	4	W	4301350349	17713	Oil Well	Producing
FEDERAL 8-1D-65	1	6	S	5	W	4301350350	18025	Oil Well	Producing
UTE TRIBAL 3-14D-54	14	5	S	4	W	4301350389	17904	Oil Well	Producing
UTE TRIBAL 1-34D-55	34	5	S	5	W	4301350408	17931	Oil Well	Producing
UTE TRIBAL 7-14-54	14	5	S	4	W	4301350409	17924	Oil Well	Producing
UTE TRIBAL 8-21D-55	21	5	S	5	W	4301350435	17963	Oil Well	Producing
UTE TRIBAL 8-34D-55	34	5	S	5	W	4301350436	17952	Oil Well	Producing
UTE TRIBAL 5-16D-54	16	5	S	4	W	4301350475	17991	Oil Well	Producing
UTE TRIBAL 12-14D-55	14	5	S	5	W	4301350476	17973	Oil Well	Producing
UTE TRIBAL 8-15D-55	15	5	S	5	W	4301350477	17974	Oil Well	Producing
UTE TRIBAL 3-14-55	14	5	S	5	W	4301350478	18002	Oil Well	Producing
UTE TRIBAL 5-14-55	14	5	S	5	W	4301350479	18021	Oil Well	Producing
UTE TRIBAL 8-10D-54	10	5	S	4	W	4301350488	18099	Oil Well	Producing
UTE TRIBAL 7-34-55	34	5	S	5	W	4301350510	17949	Oil Well	Producing
FEDERAL 4-4D-65	4	6	S	5	W	4301350521	18557	Oil Well	Producing
FEDERAL 6-3D-64	3	6	S	4	W	4301350522	18073	Oil Well	Producing
FEDERAL 1-1D-64	1	6	S	4	W	4301350524	18088	Oil Well	Producing
FEDERAL 7-2D-65	2	6	S	5	W	4301350525	18100	Oil Well	Producing
BERRY TRIBAL 12-34D-54	34	5	S	4	W	4301350527	17998	Oil Well	Producing
FEDERAL 15-5D-65	5	6	S	5	W	4301350553	18537	Oil Well	Producing
FEDERAL 11-4D-64	4	6	S	4	W	4301350565	18043	Oil Well	Producing
FEDERAL 6-6D-65	6	6	S	5	W	4301350566	18521	Oil Well	Producing
LC TRIBAL 3-15D-56	15	5	S	6	W	4301350598	18097	Oil Well	Producing
LC TRIBAL 9-16D-56	16	5	S	6	W	4301350600	19544	Oil Well	Producing
LC FEE 16-16D-56	16	5	S	6	W	4301350601	18165	Oil Well	Producing
LC TRIBAL 10-16D-56	16	5	S	6	W	4301350602	18586	Oil Well	Producing
LC TRIBAL 15-22D-56	22	5	S	6	W	4301350606	18278	Oil Well	Producing
LC TRIBAL 5-23D-56	23	5	S	6	W	4301350625	18285	Oil Well	Producing
LC TRIBAL 5-14D-56	14	5	S	6	W	4301350661	18219	Oil Well	Producing
SFW FEE 14-10D-54	10	5	S	4	W	4301350686	18070	Oil Well	Producing
LC FEE 1-22D-56	22	5	S	6	W	4301350718	18101	Oil Well	Producing
FEDERAL 8-2D-65	2	6	S	5	W	4301350719	18614	Oil Well	Producing
FEDERAL 1-2D-64	2	6	S	4	W	4301350730	18585	Oil Well	Producing
FEDERAL 7-2D-64	2	6	S	4	W	4301350734	18584	Oil Well	Producing
FEDERAL 10-6D-64	6	6	S	4	W	4301350735	18162	Oil Well	Producing
FEDERAL 4-3D-64	3	6	S	4	W	4301350736	18621	Oil Well	Producing
FEDERAL 12-3D-64	3	6	S	4	W	4301350737	18620	Oil Well	Producing

Well Transfer
From: Linn Operating, Inc.
To: Linn Operation, LLC
Effective: 3/1/2017

LC TRIBAL 3-21D-56	21	5	S	6	W	4301350751	18462	Oil Well	Producing
LC TRIBAL 5-21D-56	21	5	S	6	W	4301350752	18286	Oil Well	Producing
FEDERAL 2-1D-65	1	6	S	5	W	4301350759	18172	Oil Well	Producing
FEDERAL 3-1D-65	1	6	S	5	W	4301350760	18173	Oil Well	Producing
FEDERAL 5-1D-65	1	6	S	5	W	4301350761	18174	Oil Well	Producing
FEDERAL 9-2D-65	2	6	S	5	W	4301350762	18245	Oil Well	Producing
FEDERAL 11-2D-65	2	6	S	5	W	4301350763	18589	Oil Well	Producing
FEDERAL 15-2D-65	2	6	S	5	W	4301350764	18590	Oil Well	Producing
LC TRIBAL 14-14D-56	14	5	S	6	W	4301350776	18287	Oil Well	Producing
LC FEE 2-20D-56	20	5	S	6	W	4301350777	18622	Oil Well	Producing
LC TRIBAL 12-22D-56	22	5	S	6	W	4301350780	18341	Oil Well	Producing
FEDERAL 3-4D-65	4	6	S	5	W	4301350782	18556	Oil Well	Producing
FEDERAL 6-4D-65	4	6	S	5	W	4301350783	19162	Oil Well	Producing
FEDERAL 12-4D-65	4	6	S	5	W	4301350784	19171	Oil Well	Producing
LC TRIBAL 14-15D-56	15	5	S	6	W	4301350834	18362	Oil Well	Producing
UTE TRIBAL 7I-21D-54	21	5	S	4	W	4301350852	18423	Oil Well	Producing
UTE TRIBAL 8L-21D-54	21	5	S	4	W	4301350853	18423	Oil Well	Producing
UTE TRIBAL 10S-21D-54	21	5	S	4	W	4301350854	18423	Oil Well	Producing
UTE TRIBAL 11-11-54	11	5	S	4	W	4301350861	18775	Oil Well	Producing
LC TRIBAL 1-28D-56	28	5	S	6	W	4301350865	19575	Oil Well	Producing
LC TRIBAL 2-28D-56	28	5	S	6	W	4301350866	18592	Oil Well	Producing
LC FEE 8-28D-56	28	5	S	6	W	4301350867	18342	Oil Well	Producing
LC TRIBAL 6-27D-56	27	5	S	6	W	4301350868	18480	Oil Well	Producing
LC FEE 15-23D-56	23	5	S	6	W	4301350870	18410	Oil Well	Producing
LC TRIBAL 15-26-56	26	5	S	6	W	4301350871	18377	Oil Well	Producing
UTE TRIBAL 16-11-55	11	5	S	5	W	4301350888	18707	Oil Well	Producing
LC TRIBAL 2-5D-56	5	5	S	6	W	4301350925	18568	Oil Well	Producing
LC TRIBAL 2-9D-56	9	5	S	6	W	4301350926	18425	Oil Well	Producing
LC FEE 8-29-45	29	4	S	5	W	4301350928	18313	Oil Well	Producing
LC FEE 13-29-45	29	4	S	5	W	4301350929	18426	Oil Well	Producing
LC FEE 9-12D-57	12	5	S	7	W	4301350963	18541	Oil Well	Producing
LC FEE 1-22-57	22	5	S	7	W	4301350965	18558	Oil Well	Producing
LC TRIBAL 11-3D-56	3	5	S	6	W	4301350966	18464	Oil Well	Producing
LC TRIBAL 3-34-45	34	4	S	5	W	4301350976	18661	Oil Well	Producing
LC TRIBAL 9-10D-56	10	5	S	6	W	4301350987	18944	Oil Well	Producing
LC TRIBAL 10-9D-56	9	5	S	6	W	4301350990	18864	Oil Well	Producing
LC FEE 10-31D-45	31	4	S	5	W	4301350994	18443	Oil Well	Producing
VIEIRA TRIBAL 4-4-54	4	5	S	4	W	4301350997	18747	Oil Well	Producing
LC TRIBAL 10-21-56	21	5	S	6	W	4301350999	18439	Oil Well	Producing
FEDERAL 1-5D-64	5	6	S	4	W	4301351012	18720	Oil Well	Producing
FEDERAL 2-5D-64	5	6	S	4	W	4301351013	18723	Oil Well	Producing
FEDERAL 7-5D-64	5	6	S	4	W	4301351014	18722	Oil Well	Producing
FEDERAL 8-5D-64	5	6	S	4	W	4301351015	18721	Oil Well	Producing
MYRIN TRIBAL 15-10-55	10	5	S	5	W	4301351024	18771	Oil Well	Producing
LC TRIBAL 15-15D-56	15	5	S	6	W	4301351030	18440	Oil Well	Producing

Well Transfer
From: Linn Operating, Inc.
To: Linn Operation, LLC
Effective: 3/1/2017

LC TRIBAL 9-15D-56	15	5	S	6	W	4301351031	18441	Oil Well	Producing
LC TRIBAL 6-28-45	28	4	S	5	W	4301351034	18700	Oil Well	Producing
FEDERAL 1-12D-65	12	6	S	5	W	4301351055	18739	Oil Well	Producing
FEDERAL 8-12D-65	12	6	S	5	W	4301351056	18718	Oil Well	Producing
FEDERAL 2-12D-65	12	6	S	5	W	4301351057	18738	Oil Well	Producing
FEDERAL 7-12D-65	12	6	S	5	W	4301351058	18717	Oil Well	Producing
LC TRIBAL 8-22D-56	22	5	S	6	W	4301351069	19233	Oil Well	Producing
LC TRIBAL 9-17D-56	17	5	S	6	W	4301351070	18945	Oil Well	Producing
LC TRIBAL 7-27-45	27	4	S	5	W	4301351073	18685	Oil Well	Producing
LC TRIBAL 11-24-45	24	4	S	5	W	4301351076	18745	Oil Well	Producing
FEDERAL 3-12D-65	12	6	S	5	W	4301351093	18705	Oil Well	Producing
FEDERAL 4-12D-65	12	6	S	5	W	4301351094	18704	Oil Well	Producing
FEDERAL 5-12D-65	12	6	S	5	W	4301351095	18702	Oil Well	Producing
FEDERAL 6-12D-65	12	6	S	5	W	4301351096	18703	Oil Well	Producing
UTE TRIBAL 9-5-54	5	5	S	4	W	4301351111	18909	Oil Well	Producing
LC TRIBAL 9-8D-56	8	5	S	6	W	4301351112	18522	Oil Well	Producing
UTE TRIBAL 4-9-54	9	5	S	4	W	4301351126	19059	Oil Well	Producing
UTE TRIBAL 2-9-54	9	5	S	4	W	4301351128	18946	Oil Well	Producing
UTE TRIBAL 1-10-54	10	5	S	4	W	4301351129	18879	Oil Well	Producing
LC TRIBAL 8-30D-56	30	5	S	6	W	4301351131	18539	Oil Well	Producing
FEDERAL 1-1D-65	1	6	S	5	W	4301351142	18623	Oil Well	Producing
UTE TRIBAL 8-9-54	9	5	S	4	W	4301351143	18947	Oil Well	Producing
FEDERAL 15-1D-65	1	6	S	5	W	4301351175	18654	Oil Well	Producing
FEDERAL 16-1D-65	1	6	S	5	W	4301351176	18655	Oil Well	Producing
LC TRIBAL 11-29D-56	29	5	S	6	W	4301351183	18873	Oil Well	Producing
STATE TRIBAL 8-12-55	12	5	S	5	W	4301351188	18986	Oil Well	Producing
LC TRIBAL 11-20D-56	20	5	S	6	W	4301351189	18819	Oil Well	Producing
LC FEE 5-20D-56	20	5	S	6	W	4301351190	18818	Oil Well	Producing
LC FEE 9-19-56	19	5	S	6	W	4301351192	18596	Oil Well	Producing
LC TRIBAL 9-9D-56	9	5	S	6	W	4301351198	18595	Oil Well	Producing
OWL AND THE HAWK 3-9C5	9	3	S	5	W	4301351214	18649	Oil Well	Producing
FEDERAL 16-6-64	6	6	S	4	W	4301351217	18792	Oil Well	Producing
FEDERAL 9-6D-64	6	6	S	4	W	4301351218	18791	Oil Well	Producing
FEDERAL 15-6D-64	6	6	S	4	W	4301351219	18793	Oil Well	Producing
UTE TRIBAL 5-17-55	17	5	S	5	W	4301351220	18841	Oil Well	Producing
UTE TRIBAL 16-3-54	3	5	S	4	W	4301351226	18664	Oil Well	Producing
STATE TRIBAL 8-7-54	7	5	S	4	W	4301351228	18743	Oil Well	Producing
STATE TRIBAL 12-1-55	1	5	S	5	W	4301351229	18741	Oil Well	Producing
STATE TRIBAL 11-2-55	2	5	S	5	W	4301351230	18742	Oil Well	Producing
FEDERAL 1-11-65	11	6	S	5	W	4301351231	18689	Oil Well	Producing
FEDERAL 8-11D-65	11	6	S	5	W	4301351232	18688	Oil Well	Producing
FEDERAL 2-11D-65	11	6	S	5	W	4301351233	18690	Oil Well	Producing
STATE TRIBAL 12-3-55	3	5	S	5	W	4301351236	18744	Oil Well	Producing
UTE TRIBAL 11-4-55	4	5	S	5	W	4301351237	18663	Oil Well	Producing
UTE TRIBAL 4-9-55	9	5	S	5	W	4301351238	18796	Oil Well	Producing

Well Transfer
From: Linn Operating, Inc.
To: Linn Operation, LLC
Effective: 3/1/2017

UTE TRIBAL 15-5-55	5	5	S	5	W	4301351239	18740	Oil Well	Producing
UTE TRIBAL 9-21D-55	21	5	S	5	W	4301351258	19401	Oil Well	Producing
UTE FEE 9-9-54	9	5	S	4	W	4301351259	18642	Oil Well	Producing
LC TRIBAL 4-29-45	29	4	S	5	W	4301351260	18719	Oil Well	Producing
UTE FEE 14-9D-54	9	5	S	4	W	4301351271	18684	Oil Well	Producing
UTE FEE 15-9D-54	9	5	S	4	W	4301351272	18687	Oil Well	Producing
LC FEE 10-28D-56	28	5	S	6	W	4301351288	18591	Oil Well	Producing
UTE TRIBAL 8-16D-54	16	5	S	4	W	4301351295	19003	Oil Well	Producing
FEE TRIBAL 4-5-54	5	5	S	4	W	4301351303	19187	Oil Well	Producing
LC TRIBAL 1-26-56	26	5	S	6	W	4301351306	18816	Oil Well	Producing
UTE TRIBAL 6-16D-54	16	5	S	4	W	4301351307	19060	Oil Well	Producing
LC TRIBAL 7-22D-56	22	5	S	6	W	4301351308	18795	Oil Well	Producing
LC TRIBAL 9-22D-56	22	5	S	6	W	4301351309	18794	Oil Well	Producing
STATE TRIBAL 2-12D-55	12	5	S	5	W	4301351310	19444	Oil Well	Producing
LC TRIBAL 9-32D-56	32	5	S	6	W	4301351316	19228	Oil Well	Producing
LC TRIBAL 7-26D-56	26	5	S	6	W	4301351319	18817	Oil Well	Producing
LC FEE 8-6D-56	6	5	S	6	W	4301351342	18657	Oil Well	Producing
LC FEE 10-29D-45	29	4	S	5	W	4301351343	18850	Oil Well	Producing
LC TRIBAL 1-7D-56	7	5	S	6	W	4301351344	18774	Oil Well	Producing
LC TRIBAL 9-7D-56	7	5	S	6	W	4301351346	18773	Oil Well	Producing
UTE TRIBAL 7-10D-54	10	5	S	4	W	4301351365	19391	Oil Well	Producing
LC TRIBAL 11-10D-56	10	5	S	6	W	4301351369	18840	Oil Well	Producing
LC FEE 1-31D-45	31	4	S	5	W	4301351371	18686	Oil Well	Producing
LC TRIBAL 9-26D-56	26	5	S	6	W	4301351381	19433	Oil Well	Producing
LC TRIBAL 14-21D-56	21	5	S	6	W	4301351384	18877	Oil Well	Producing
LC TRIBAL 4-22D-56	22	5	S	6	W	4301351385	18878	Oil Well	Producing
LC TRIBAL 8-21D-56	21	5	S	6	W	4301351392	18874	Oil Well	Producing
UTE TRIBAL 1-17-55	17	5	S	5	W	4301351393	18848	Oil Well	Producing
LC TRIBAL 4-33D-45	33	4	S	5	W	4301351401	18853	Oil Well	Producing
LC TRIBAL 16-21D-56	21	5	S	6	W	4301351407	18875	Oil Well	Producing
UTE TRIBAL 2-10D-54	10	5	S	4	W	4301351411	19172	Oil Well	Producing
UTE TRIBAL 8-17D-55	17	5	S	5	W	4301351413	19388	Oil Well	Producing
UTE TRIBAL 4-10D-54	10	5	S	4	W	4301351414	19069	Oil Well	Producing
LC TRIBAL 2-21D-56	16	5	S	6	W	4301351418	19252	Oil Well	Producing
LC TRIBAL 1-23D-45	23	4	S	5	W	4301351425	18855	Oil Well	Producing
LC TRIBAL 2-28D-45	28	4	S	5	W	4301351429	18701	Oil Well	Producing
LC TRIBAL 9-28D-45	28	4	S	5	W	4301351430	18656	Oil Well	Producing
LC FEE 1-1-56	1	5	S	6	W	4301351458	18829	Oil Well	Producing
Bingham #3-4B1	4	2	S	1	W	4301351464	18825	Oil Well	Producing
LC Tribal 12-32-45	32	4	S	5	W	4301351465	18772	Oil Well	Producing
UTE TRIBAL 2-5-54	5	5	S	4	W	4301351520	18880	Oil Well	Producing
LC Tribal 3-32D-45	32	4	S	5	W	4301351561	18842	Oil Well	Producing
LC TRIBAL 5-15D-56	15	5	S	6	W	4301351562	19253	Oil Well	Producing
LC FEE 16-36-56	36	5	S	6	W	4301351611	19096	Oil Well	Producing
LC FEE 10-36D-56	36	5	S	6	W	4301351622	19583	Oil Well	Producing

Well Transfer
From: Linn Operating, Inc.
To: Linn Operation, LLC
Effective: 3/1/2017

RED MOUNTAIN 3-5B1	5	2	S	1	W	4301351632	18954	Oil Well	Producing
LC TRIBAL 15-34-56	34	5	S	6	W	4301351647	18962	Oil Well	Producing
LC TRIBAL 15-27-56	27	5	S	6	W	4301351649	19605	Oil Well	Producing
LC TRIBAL 11-27D-56	27	5	S	6	W	4301351650	19606	Oil Well	Producing
LC TRIBAL 1-34D-56	34	5	S	6	W	4301351660	18988	Oil Well	Producing
LC TRIBAL 2-29D-45	29	4	S	5	W	4301351705	19545	Oil Well	Producing
LC FEE 13-23-56	23	5	S	6	W	4301351706	18994	Oil Well	Producing
LC FEE 11-23D-56	23	5	S	6	W	4301351707	18995	Oil Well	Producing
LC TRIBAL 3-33-56	33	5	S	6	W	4301351711	19242	Oil Well	Producing
LC FEE 11-29D-45	29	4	S	5	W	4301351743	19188	Oil Well	Producing
LC TAYLOR FEE 14-22D-56	22	5	S	6	W	4301351744	19508	Oil Well	Producing
LC FEE 4-28D-45	29	4	S	5	W	4301351745	18849	Oil Well	Producing
LC FEE 14-6D-56	6	5	S	6	W	4301351787	18910	Oil Well	Producing
LC FEE 15-6-56	6	5	S	6	W	4301351792	19334	Oil Well	Producing
LC TRIBAL 9-27-56	27	5	S	6	W	4301351822	19607	Oil Well	Producing
LC TRIBAL 7-27D-56	27	5	S	6	W	4301351823	19608	Oil Well	Producing
MECHAM #3-1B2	1	2	S	2	W	4301351844	19082	Oil Well	Producing
MIKE AND SHELLEY #3-4B2	4	2	S	2	W	4301351845	19083	Oil Well	Producing
LC Fee 14-36D-56	36	5	S	6	W	4301351878	19376	Oil Well	Producing
LC Fee 12-36-56	36	5	S	6	W	4301351883	19377	Oil Well	Producing
LC Tribal 6-29D-45	29	4	S	5	W	4301351902	19402	Oil Well	Producing
FEDERAL 6-7-64	7	6	S	4	W	4301351915	19117	Oil Well	Producing
FEDERAL 3-7D-64	7	6	S	4	W	4301351916	19115	Oil Well	Producing
FEDERAL 4-7D-64	7	6	S	4	W	4301351917	19110	Oil Well	Producing
FEDERAL 5-7D-64	7	6	S	4	W	4301351918	19111	Oil Well	Producing
FEDERAL 2-7-64	7	6	S	4	W	4301351919	19139	Oil Well	Producing
FEDERAL 1-7D-64	7	6	S	4	W	4301351920	19140	Oil Well	Producing
FEDERAL 12-7D-64	7	6	S	4	W	4301351924	19025	Oil Well	Producing
FEDERAL 11-7D-64	7	6	S	4	W	4301351925	19039	Oil Well	Producing
FEDERAL 13-7D-64	7	6	S	4	W	4301351926	19026	Oil Well	Producing
FEDERAL 14-7D-64	7	6	S	4	W	4301351927	19040	Oil Well	Producing
FEDERAL 7-7D-64	7	6	S	4	W	4301351933	19141	Oil Well	Producing
FEDERAL 8-7D-64	7	6	S	4	W	4301351934	19142	Oil Well	Producing
FEDERAL 9-7D-64	7	6	S	4	W	4301351935	19143	Oil Well	Producing
FEDERAL 10-7D-64	7	6	S	4	W	4301351936	19144	Oil Well	Producing
ABBOTT FEE 6-6-54	6	5	S	4	W	4301351948	18963	Oil Well	Producing
ABBOTT FEE 2-6D-54	6	5	S	4	W	4301351949	18974	Oil Well	Producing
ABBOTT FEE 4-6-54	6	5	S	4	W	4301351952	18965	Oil Well	Producing
Federal 7-9D-64	9	6	S	4	W	4301351990	19721	Oil Well	Producing
Federal 15-12D-65	12	6	S	5	W	4301351992	19051	Oil Well	Producing
Federal 10-12D-65	12	6	S	5	W	4301351999	19052	Oil Well	Producing
Federal 9-12D-65	12	6	S	5	W	4301352000	19053	Oil Well	Producing
Federal 16-12D-65	12	6	S	5	W	4301352003	19054	Oil Well	Producing
Federal 4-6D-65	6	6	S	5	W	4301352005	19173	Oil Well	Producing
Federal 12-6D-65	6	6	S	5	W	4301352006	19174	Oil Well	Producing

Well Transfer
From: Linn Operating, Inc.
To: Linn Operation, LLC
Effective: 3/1/2017

Federal 1-6D-65	6	6	S	5	W	4301352012	19189	Oil Well	Producing
Federal 3-6D-65	6	6	S	5	W	4301352014	19190	Oil Well	Producing
Federal 3-9D-64	9	6	S	4	W	4301352015	19678	Oil Well	Producing
Federal 2-6-65	6	6	S	5	W	4301352017	19191	Oil Well	Producing
Federal 7-6D-65	6	6	S	5	W	4301352018	19192	Oil Well	Producing
Federal 6-9-64	9	6	S	4	W	4301352021	19679	Oil Well	Producing
Federal 8-9D-64	9	6	S	4	W	4301352023	19723	Oil Well	Producing
Federal 5-9D-64	9	6	S	4	W	4301352035	19680	Oil Well	Producing
Federal 11-9D-64	9	6	S	4	W	4301352037	19687	Oil Well	Producing
Federal 12-9D-64	9	6	S	4	W	4301352038	19688	Oil Well	Producing
Federal 13-9D-64	9	6	S	4	W	4301352039	19689	Oil Well	Producing
Federal 2-9D-64	9	6	S	4	W	4301352042	19724	Oil Well	Producing
Federal 16-11D-65	11	6	S	5	W	4301352045	19070	Oil Well	Producing
Federal 15-11D-65	11	6	S	5	W	4301352046	19076	Oil Well	Producing
Federal 10-11D-65	11	6	S	5	W	4301352047	19077	Oil Well	Producing
Federal 9-11D-65	11	6	S	5	W	4301352048	19071	Oil Well	Producing
Federal 11-12D-65	12	6	S	5	W	4301352049	19121	Oil Well	Producing
Federal 12-12D-65	12	6	S	5	W	4301352050	19122	Oil Well	Producing
Federal 13-12D-65	12	6	S	5	W	4301352052	19123	Oil Well	Producing
Federal 14-12D-65	12	6	S	5	W	4301352053	19124	Oil Well	Producing
LC Tribal 12-28D-45	28	4	S	5	W	4301352089	19378	Oil Well	Producing
LC Tribal 2-32D-45	32	4	S	5	W	4301352113	19348	Oil Well	Producing
LC Tribal 16-29D-45	32	4	S	5	W	4301352114	19349	Oil Well	Producing
Vieira Tribal 3-4D-54	4	5	S	4	W	4301352145	19210	Oil Well	Producing
Vieira Tribal 5-4D-54	4	5	S	4	W	4301352146	19193	Oil Well	Producing
Vieira Tribal 6-4D-54	4	5	S	4	W	4301352147	19216	Oil Well	Producing
Lamplugh Tribal 6-3D-54	3	5	S	4	W	4301352148	19289	Oil Well	Producing
Lamplugh Tribal 5-3D-54	3	5	S	4	W	4301352149	19290	Gas Well	Producing
Lamplugh Tribal 4-3D-54	3	5	S	4	W	4301352150	19291	Oil Well	Producing
Lamplugh Tribal 3-3D-54	3	5	S	4	W	4301352151	19292	Oil Well	Producing
UTE Tribal 6-35D-54	35	5	S	4	W	4301352158	19254	Gas Well	Producing
UTE Tribal 4-35D-54	35	5	S	4	W	4301352159	19255	Gas Well	Producing
Heiner Tribal 3-11D-54	11	5	S	4	W	4301352165	19194	Oil Well	Producing
Heiner Tribal 4-11-54	11	5	S	4	W	4301352166	19195	Oil Well	Producing
Heiner Tribal 5-11D-54	11	5	S	4	W	4301352167	19196	Oil Well	Producing
Conolly Tribal 1-11D-54	11	5	S	4	W	4301352168	19270	Oil Well	Producing
Conolly Tribal 2-11D-54	11	5	S	4	W	4301352169	19197	Oil Well	Producing
Conolly Tribal 7-11D-54	11	5	S	4	W	4301352170	19280	Oil Well	Producing
Conolly Tribal 8-11D-54	11	5	S	4	W	4301352171	19281	Oil Well	Producing
Casper Tribal 1-5D-54	5	5	S	4	W	4301352180	19198	Oil Well	Producing
Fee Tribal 6-5D-54	5	5	S	4	W	4301352181	19199	Oil Well	Producing
Fee Tribal 5-5D-54	5	5	S	4	W	4301352182	19200	Oil Well	Producing
Fee Tribal 3-5D-54	5	5	S	4	W	4301352184	19201	Oil Well	Producing
Casper Tribal 7-5D-54	5	5	S	4	W	4301352185	19202	Oil Well	Producing
UTE Tribal 10-35D-54	35	5	S	4	W	4301352198	19320	Oil Well	Producing

Well Transfer
From: Linn Operating, Inc.
To: Linn Operation, LLC
Effective: 3/1/2017

UTE Tribal 14-35D-54	35	5	S	4	W	4301352199	19311	Gas Well	Producing
UTE Tribal 12-35D-54	35	5	S	4	W	4301352200	19312	Oil Well	Producing
UTE Tribal 14-18D-54	18	5	S	4	W	4301352213	19509	Gas Well	Producing
UTE Tribal 16-35D-54	35	5	S	4	W	4301352230	19321	Oil Well	Producing
Evans Tribal 1-3-54	3	5	S	4	W	4301352234	19264	Oil Well	Producing
Evans Tribal 2-3D-54	3	5	S	4	W	4301352235	19265	Oil Well	Producing
Evans Tribal 7-3D-54	3	5	S	4	W	4301352236	19256	Oil Well	Producing
Evans Tribal 8-3D-54	3	5	S	4	W	4301352237	19257	Oil Well	Producing
Ute Tribal 9-3D-54	3	5	S	4	W	4301352249	19236	Oil Well	Producing
Ute Tribal 15-3D-54	3	5	S	4	W	4301352250	19237	Oil Well	Producing
Ute Tribal 10-3-54	3	5	S	4	W	4301352251	19238	Oil Well	Producing
Ute Tribal 14-3D-54	3	5	S	4	W	4301352298	19258	Oil Well	Producing
Ute Tribal 12-3D-54	3	5	S	4	W	4301352299	19259	Oil Well	Producing
Ute Tribal 11-3D-54	3	5	S	4	W	4301352300	19260	Oil Well	Producing
Ute Tribal 16-4D-54	4	5	S	4	W	4301352302	19350	Oil Well	Producing
Ute Tribal 15-4D-54	4	5	S	4	W	4301352303	19293	Oil Well	Producing
Ute Tribal 9-4D-54	4	5	S	4	W	4301352305	19304	Oil Well	Producing
Ute Tribal 10-4D-54	4	5	S	4	W	4301352307	19294	Oil Well	Producing
UTE Tribal 15-31D-55	31	5	S	5	W	4301352309	19472	Gas Well	Producing
UTE Tribal 16-31D-55	31	5	S	5	W	4301352318	19473	Gas Well	Producing
UTE Tribal 2-35D-54	35	5	S	4	W	4301352319	19322	Oil Well	Producing
UTE Tribal 8-35D-54	35	5	S	4	W	4301352320	19323	Oil Well	Producing
Abbott Fee 5-6D-54	6	5	S	4	W	4301352326	19351	Oil Well	Producing
Ute Tribal 6-11D-54	11	5	S	4	W	4301352330	19243	Oil Well	Producing
Ute Tribal 12-11D-54	11	5	S	4	W	4301352331	19244	Oil Well	Producing
Ute Tribal 14-11D-54	11	5	S	4	W	4301352332	19245	Oil Well	Producing
Ute Tribal 11-4D-54	4	5	S	4	W	4301352343	19305	Oil Well	Producing
Ute Tribal 13-4D-54	4	5	S	4	W	4301352345	19353	Oil Well	Producing
Ute Tribal 14-4D-54	4	5	S	4	W	4301352346	19306	Oil Well	Producing
State Tribal 7-12D-55	12	5	S	5	W	4301352369	19651	Oil Well	Producing
State Tribal 1-12D-55	12	5	S	5	W	4301352390	19445	Oil Well	Producing
State Tribal 16-6D-54	6	5	S	4	W	4301352394	19424	Oil Well	Producing
State Tribal 9-6D-54	6	5	S	4	W	4301352396	19426	Oil Well	Producing
State Tribal 7-7D-54	7	5	S	4	W	4301352426	19496	Oil Well	Producing
State Tribal 1-7D-54	7	5	S	4	W	4301352427	19497	Oil Well	Producing
State Tribal 2-7D-54	7	5	S	4	W	4301352428	19498	Oil Well	Producing
State Tribal 3-7D-54	7	5	S	4	W	4301352429	19517	Oil Well	Producing
State Tribal 4-7D-54	7	5	S	4	W	4301352431	19546	Oil Well	Producing
State Tribal 5-7D-54	7	5	S	4	W	4301352432	19547	Oil Well	Producing
State Tribal 6-7D-54	7	5	S	4	W	4301352433	19518	Oil Well	Producing
State Tribal 11-6D-54	6	5	S	4	W	4301352452	19474	Oil Well	Producing
State Tribal 12-6D-54	6	5	S	4	W	4301352453	19475	Oil Well	Producing
State Tribal 13-6D-54	6	5	S	4	W	4301352454	19476	Oil Well	Producing
Ute Tribal 1-9D-54	9	5	S	4	W	4301352465	19356	Oil Well	Producing
Ute Tribal 7-9D-54	9	5	S	4	W	4301352466	19357	Oil Well	Producing

Well Transfer
From: Linn Operating, Inc.
To: Linn Operation, LLC
Effective: 3/1/2017

UTE TRIBAL 12-5D-54	5	5	S	4	W	4301352480	19499	Oil Well	Producing
UTE TRIBAL 13-5D-54	5	5	S	4	W	4301352484	19500	Oil Well	Producing
UTE TRIBAL 14-5D-54	5	5	S	4	W	4301352493	19510	Oil Well	Producing
Federal 14-6D-65	6	6	S	5	W	4301352495	19610	Oil Well	Producing
Federal 13-6D-65	6	6	S	5	W	4301352496	19611	Oil Well	Producing
Federal 11-6D-65	6	6	S	5	W	4301352497	19591	Oil Well	Producing
Ute Tribal 16-5D-54	5	5	S	4	W	4301352545	19335	Oil Well	Producing
Ute Tribal 15-5D-54	5	5	S	4	W	4301352546	19358	Oil Well	Producing
Ute Tribal 10-5D-54	5	5	S	4	W	4301352547	19359	Oil Well	Producing
Ute Tribal 8-5D-54	5	5	S	4	W	4301352548	19336	Oil Well	Producing
State Tribal 13-11D-54	10	5	S	4	W	4301352561	19519	Oil Well	Producing
State Tribal 1-18D-54	18	5	S	4	W	4301352568	19434	Oil Well	Producing
State Tribal 2-18D-54	18	5	S	4	W	4301352576	19427	Oil Well	Producing
State Tribal 8-18D-54	18	5	S	4	W	4301352577	19428	Oil Well	Producing
Federal 16-6D-65	6	6	S	5	W	4301352590	19616	Oil Well	Producing
Federal 15-6D-65	6	6	S	5	W	4301352591	19617	Oil Well	Producing
State Tribal 4-18D-54	18	5	S	4	W	4301352607	19435	Oil Well	Producing
State Tribal 3-18D-54	18	5	S	4	W	4301352608	19436	Oil Well	Producing
State Tribal 6-18D-54	18	5	S	4	W	4301352609	19437	Oil Well	Producing
State Tribal 5-12-55	12	5	S	5	W	4301352643	19446	Oil Well	Producing
State Tribal 12-12D-55	12	5	S	5	W	4301352644	19447	Oil Well	Producing
State Tribal 6-12D-55	12	5	S	5	W	4301352645	19438	Oil Well	Producing
State Tribal 16-1D-55	1	5	S	5	W	4301352646	19483	Oil Well	Producing
State Tribal 15-1D-55	1	5	S	5	W	4301352647	19484	Oil Well	Producing
State Tribal 10-1D-55	1	5	S	5	W	4301352648	19485	Oil Well	Producing
State Tribal 9-1D-55	1	5	S	5	W	4301352649	19486	Oil Well	Producing
LC FEE 16-15D-56	14	5	S	6	W	4301352655	19520	Oil Well	Producing
LC Tribal 2-22D-56	22	5	S	6	W	4301352663	19548	Oil Well	Producing
LC Tribal 3-22D-56	22	5	S	6	W	4301352664	19549	Oil Well	Producing
UTE TRIBAL 14-30D-55	30	5	S	5	W	4301352687	19836	Oil Well	Producing
UTE TRIBAL 13-30D-55	30	5	S	5	W	4301352688	19743	Oil Well	Producing
UTE TRIBAL 12-30D-55	30	5	S	5	W	4301352689	19744	Oil Well	Producing
UTE TRIBAL 11-30D-55	30	5	S	5	W	4301352690	19745	Oil Well	Producing
UTE TRIBAL 12-31D-55	31	5	S	5	W	4301352699	19774	Oil Well	Producing
UTE TRIBAL 13-31D-55	31	5	S	5	W	4301352700	19775	Oil Well	Producing
UTE TRIBAL 14-31D-55	31	5	S	5	W	4301352701	19776	Oil Well	Producing
UTE TRIBAL 11-31-55	31	5	S	5	W	4301352703	19777	Oil Well	Producing
UTE TRIBAL 9-30D-55	30	5	S	5	W	4301352731	19732	Oil Well	Producing
UTE TRIBAL 15-30D-55	30	5	S	5	W	4301352737	19725	Oil Well	Producing
UTE TRIBAL 3-31D-55	31	5	S	5	W	4301352757	19778	Oil Well	Producing
UTE TRIBAL 5-31D-55	31	5	S	5	W	4301352758	19779	Oil Well	Producing
UTE TRIBAL 6-31D-55	31	5	S	5	W	4301352759	19746	Oil Well	Producing
Federal 8-14D-65	14	6	S	5	W	4301352767	19592	Oil Well	Producing
Federal 7-14D-65	14	6	S	5	W	4301352768	19593	Oil Well	Producing
Federal 2-14D-65	14	6	S	5	W	4301352769	19594	Oil Well	Producing

Well Transfer
From: Linn Operating, Inc.
To: Linn Operation, LLC
Effective: 3/1/2017

Federal 1-14D-65	14	6	S	5	W	4301352770	19595	Oil Well	Producing
UTE TRIBAL 4-31D-55	31	5	S	5	W	4301352795	19780	Oil Well	Producing
Federal 1-13D-65	13	6	S	5	W	4301352800	19596	Oil Well	Producing
Federal 2-13-65	13	6	S	5	W	4301352801	19501	Oil Well	Producing
Federal 7-13D-65	13	6	S	5	W	4301352802	19597	Oil Well	Producing
Federal 8-13D-65	13	6	S	5	W	4301352803	19502	Oil Well	Producing
Federal 12-8D-64	7	6	S	4	W	4301352832	19550	Oil Well	Producing
Federal 5-8D-64	7	6	S	4	W	4301352833	19551	Oil Well	Producing
Federal 4-8D-64	7	6	S	4	W	4301352834	19552	Oil Well	Producing
Federal 3-8D-64	5	6	S	4	W	4301352845	19503	Oil Well	Producing
MAY UTE FED 1-13B1	13	2	S	1	W	4304730176	5435	Oil Well	Producing
COOK 1-26B1	26	2	S	1	W	4304731981	11212	Oil Well	Producing
CHRISTIANSEN 2-12B1	12	2	S	1	W	4304732178	11350	Oil Well	Producing
RICH 2-13B1	13	2	S	1	W	4304732744	12046	Oil Well	Producing
THOMAS 4-10B1	10	2	S	1	W	4304734080	13284	Oil Well	Producing
HAMAKER 3-12B1	12	2	S	1	W	4304752294	18650	Oil Well	Producing
BETTS 2-26B1	26	2	S	1	W	4304752435	18698	Oil Well	Producing
LC TRIBAL 4H-31-56	31	5	S	6	W	4301351738		Oil Well	Returned APD (Unapproved)
LC Fee 11-22-57	22	5	S	7	W	4301352127		Oil Well	Returned APD (Unapproved)
LC Fee 13-22D-57	22	5	S	7	W	4301352131		Oil Well	Returned APD (Unapproved)
LC Tribal 5-22D-57	22	5	S	7	W	4301352133		Oil Well	Returned APD (Unapproved)
LC Tribal 15-22D-57	22	5	S	7	W	4301352134		Oil Well	Returned APD (Unapproved)
LC Tribal 11-18D-56	18	5	S	6	W	4301352140		Oil Well	Returned APD (Unapproved)
LC Tribal 13-18D-56	18	5	S	6	W	4301352141		Oil Well	Returned APD (Unapproved)
LC Tribal 15-18D-56	18	5	S	6	W	4301352142		Oil Well	Returned APD (Unapproved)
LC Tribal 7-18D-56	18	5	S	6	W	4301352153		Oil Well	Returned APD (Unapproved)
LC Tribal 5-18D-56	18	5	S	6	W	4301352154		Oil Well	Returned APD (Unapproved)
LC Tribal 3-18-56	18	5	S	6	W	4301352155		Oil Well	Returned APD (Unapproved)
LC Tribal 6-19D-56	19	5	S	6	W	4301352247		Oil Well	Returned APD (Unapproved)
LC Tribal 4-19D-56	19	5	S	6	W	4301352248		Oil Well	Returned APD (Unapproved)
Abbott Fee 3-6D-54	6	5	S	4	W	4301352325		Oil Well	Returned APD (Unapproved)
LC Fee 9-11D-56	11	5	S	6	W	4301352479		Oil Well	Returned APD (Unapproved)
Williams Tribal 8-4D-54	4	5	S	4	W	4301352650		Oil Well	Returned APD (Unapproved)
Williams Tribal 7-4D-54	4	5	S	4	W	4301352651		Oil Well	Returned APD (Unapproved)
Williams Tribal 2-4D-54	4	5	S	4	W	4301352652		Oil Well	Returned APD (Unapproved)
Williams Tribal 1-4D-54	4	5	S	4	W	4301352653		Oil Well	Returned APD (Unapproved)
Foy Fee 12-34D-55	34	5	S	5	W	4301353087		Oil Well	Returned APD (Unapproved)
Foy Fee 6-34D-55	34	5	S	5	W	4301353088		Oil Well	Returned APD (Unapproved)
Foy Fee 5-34D-55	34	5	S	5	W	4301353089		Oil Well	Returned APD (Unapproved)
Foy Fee 3-34D-55	34	5	S	5	W	4301353090		Oil Well	Returned APD (Unapproved)
Foy Tribal 13-34D-55	34	5	S	5	W	4301353119		Oil Well	Returned APD (Unapproved)
Foy Tribal 14-34-55	34	5	S	5	W	4301353120		Oil Well	Returned APD (Unapproved)
UTE FEE 10-13D-55	13	5	S	5	W	4301353129		Oil Well	Returned APD (Unapproved)
LC Tribal 10-15D-56	15	5	S	6	W	4301353163		Oil Well	Returned APD (Unapproved)
LC Tribal 9-21D-56	21	5	S	6	W	4301353164		Oil Well	Returned APD (Unapproved)

Well Transfer
From: Linn Operating, Inc.
To: Linn Operation, LLC
Effective: 3/1/2017

LC Tribal 7-21D-56	21	5	S	6	W	4301353165		Oil Well	Returned APD (Unapproved)
LC Tribal 11-15D-56	15	5	S	6	W	4301353189		Oil Well	Returned APD (Unapproved)
SCOFIELD THORPE 22-41X RIG SKID	22	12	S	7	E	4300730890	13719	Gas Well	Shut-in
SCOFIELD-THORPE 35-13	35	12	S	7	E	4300730991	14846	Gas Well	Shut-in
SCOFIELD-THORPE 23-31	23	12	S	7	E	4300731001	14923	Gas Well	Shut-in
STATE 1-10A2 (3-10C)	10	1	S	2	W	4301330006	5860	Gas Well	Shut-in
DOUG BROWN 2-4A2	4	1	S	2	W	4301330017	5840	Oil Well	Shut-in
L BOREN U 5-22A2	22	1	S	2	W	4301330107	5900	Oil Well	Shut-in
L BOREN U 6-16A2	16	1	S	2	W	4301330123	5750	Oil Well	Shut-in
UTE TRIBAL 1-6B3	6	2	S	3	W	4301330136	5705	Oil Well	Shut-in
CAMPBELL UTE ST 1-7B1	7	2	S	1	W	4301330236	5295	Oil Well	Shut-in
WIRE FENCE CYN FED 15-1	15	6	S	5	W	4301330404	8233	Gas Well	Shut-in
R FORK ANTELOPE CYN FED 25-1	25	6	S	5	W	4301330406	8234	Oil Well	Shut-in
WOLF HOLLOW 22-1	22	6	S	5	W	4301330425	10370	Gas Well	Shut-in
D L GALLOWAY 1-14B2	14	2	S	2	W	4301330564	5965	Oil Well	Shut-in
LAMICQ 2-6B1	6	2	S	1	W	4301330809	2301	Oil Well	Shut-in
HAMBLIN 2-26-A2	26	1	S	2	W	4301330903	5361	Oil Well	Shut-in
LAMICQ 2-20A2	20	1	S	2	W	4301331191	10794	Oil Well	Shut-in
MARK 2-25A2	25	1	S	2	W	4301331232	10986	Oil Well	Shut-in
Z and T UTE TRIBAL 12-22	22	5	S	4	W	4301331311	11421	Oil Well	Shut-in
MITCHELL 2-4B1	4	2	S	1	W	4301331317	11231	Oil Well	Shut-in
CHAPMAN 2-4B2	4	2	S	2	W	4301331378	11485	Oil Well	Shut-in
UTE TRIBAL 15-17	17	5	S	4	W	4301331649	11956	Oil Well	Shut-in
POWELL 2-16B1	16	2	S	1	W	4301331820	12342	Oil Well	Shut-in
UTE TRIBAL 3-19	19	5	S	4	W	4301331830	12197	Oil Well	Shut-in
UTE TRIBAL 14-17	17	5	S	4	W	4301332147	12755	Oil Well	Shut-in
UTE TRIBAL 7-30	30	5	S	4	W	4301332167	12945	Oil Well	Shut-in
UTE TRIBAL 1-33	33	5	S	4	W	4301332185	13024	Oil Well	Shut-in
UTE TRIBAL 5-24-55	24	5	S	5	W	4301332263	13621	Oil Well	Shut-in
UTE TRIBAL 10-16-55	16	5	S	5	W	4301332345	13693	Oil Well	Shut-in
UTE TRIBAL 15-30-54	30	5	S	4	W	4301332382	13944	Oil Well	Shut-in
UTE TRIBAL 14-21-54	21	5	S	4	W	4301332384	13946	Oil Well	Shut-in
UTE TRIBAL 13-30-54	30	5	S	4	W	4301332409	13968	Oil Well	Shut-in
UTE TRIBAL 3-33-54	33	5	S	4	W	4301332412	13938	Oil Well	Shut-in
UTE TRIBAL 1-20-55	20	5	S	5	W	4301332414	14548	Oil Well	Shut-in
UTE TRIBAL 9-29-54	29	5	S	4	W	4301332566	14369	Oil Well	Shut-in
UTE TRIBAL 6-24-54	24	5	S	4	W	4301332570	14299	Oil Well	Shut-in
UTE TRIBAL 10-14-55	14	5	S	5	W	4301332601	14331	Oil Well	Shut-in
UTE TRIBAL 11-5-54	5	5	S	4	W	4301332664	14415	Oil Well	Shut-in
UTE TRIBAL 16-24-55	24	5	S	5	W	4301332672	14384	Gas Well	Shut-in
MYRIN TRIBAL 14-19-55	19	5	S	5	W	4301332782	15184	Oil Well	Shut-in
MOON TRIBAL 13-27-54	27	5	S	4	W	4301332801	15057	Oil Well	Shut-in
MOON TRIBAL 11-27-54	27	5	S	4	W	4301332845	15135	Oil Well	Shut-in
UTE TRIBAL 15-15-55	15	5	S	5	W	4301332855	15114	Oil Well	Shut-in
UTE TRIBAL 10-24-54	24	5	S	4	W	4301332932	15364	Oil Well	Shut-in

Well Transfer
From: Linn Operating, Inc.
To: Linn Operation, LLC
Effective: 3/1/2017

UTE TRIBAL 8-24-54	24	5	S	4	W	4301332933	15402	Oil Well	Shut-in
UTE TRIBAL 12-15-55	15	5	S	5	W	4301332981	15348	Oil Well	Shut-in
UTE TRIBAL 2-23-55	23	5	S	5	W	4301333045	15416	Oil Well	Shut-in
TAYLOR FEE 7-14-56	14	5	S	6	W	4301333140	15601	Oil Well	Shut-in
WILCOX FEE 15-16-56	16	5	S	6	W	4301333151	15527	Oil Well	Shut-in
UTE TRIBAL 11-13-55	13	5	S	5	W	4301333268	15692	Oil Well	Shut-in
UTE TRIBAL 7-14-55	14	5	S	5	W	4301333269	15693	Oil Well	Shut-in
14-11-56 DLB	11	5	S	6	W	4301333378	15801	Oil Well	Shut-in
FEDERAL 10-3-65	3	6	S	5	W	4301333386	16297	Oil Well	Shut-in
BERRY TRIBAL 16-34D-54	34	5	S	4	W	4301333464	16280	Oil Well	Shut-in
FEDERAL 10-2-65	2	6	S	5	W	4301333542	16181	Oil Well	Shut-in
UTE FEE 2-13-55	13	5	S	5	W	4301333720	18659	Oil Well	Shut-in
LC TRIBAL 13-16D-56	16	5	S	6	W	4301334282	17601	Oil Well	Shut-in
LC TRIBAL 4-27D-56	27	5	S	6	W	4301350262	17568	Oil Well	Shut-in
LC TRIBAL 8-16D-56	16	5	S	6	W	4301350599	18161	Oil Well	Shut-in
LC TRIBAL 15-8D-56	8	5	S	6	W	4301351060	18862	Oil Well	Shut-in
UTE TRIBAL 6-9-54	9	5	S	4	W	4301351127	19017	Oil Well	Shut-in
LC TRIBAL 16-30D-56	30	5	S	6	W	4301351132	18540	Oil Well	Shut-in
STATE TRIBAL 15-6-54	6	5	S	4	W	4301351227	18746	Oil Well	Shut-in
LC TRIBAL 1-29-56	29	5	S	6	W	4301351442	18876	Oil Well	Shut-in
CC Fee 7R-28-38	28	3	S	8	W	4301351852	18863	Oil Well	Shut-in
ABBOTT FEE 8-6D-54	6	5	S	4	W	4301351950	18964	Oil Well	Shut-in
Federal 1-9D-64	9	6	S	4	W	4301352020	19722	Oil Well	Shut-in
FEDERAL 14-9D-64	9	6	S	4	W	4301352040	19690	Oil Well	Shut-in
Ute Tribal 12-4D-54	4	5	S	4	W	4301352344	19352	Oil Well	Shut-in
State Tribal 10-6D-54	6	5	S	4	W	4301352395	19425	Oil Well	Shut-in
State Tribal 14-6D-54	6	5	S	4	W	4301352455	19477	Oil Well	Shut-in
Federal 10-6D-65	6	6	S	5	W	4301352498	19612	Oil Well	Shut-in
Federal 2-7D-65	7	6	S	5	W	4301352537	19630	Oil Well	Shut-in
Federal 5-7D-65	7	6	S	5	W	4301352538	19613	Oil Well	Shut-in
Federal 4-7D-65	7	6	S	5	W	4301352541	19614	Oil Well	Shut-in
Federal 3-7-65	7	6	S	5	W	4301352560	19609	Oil Well	Shut-in
Federal 1-7D-65	6	6	S	5	W	4301352589	19615	Oil Well	Shut-in
RBRTSN UTE ST 1-12B1	12	2	S	1	W	4304730164	5475	Oil Well	Shut-in

Facility Transfer
From: Linn Operating, Inc.
To: Linn Operating, LLC
Effective: March 1, 2017

Facility Name	Facility Status	Facility Type	Sec	TWN	RNG	Qtr/Qtr
Boren	Active	Tank Battery	23	1	2	NENW
Chevron Pump Station	Active	Tank Battery	22	1	2	
Davis Hollow	Active	Compressor Station		5	6	SESW
LINN ENERGY, LLC	Active	Gas Plant				
Scofield	Active	Compressor Station	26	12	7	
Section 21	Active	Compressor Station	21	5	5	NENE
Section 22	Active	Compressor Station	22	5	4	NWSW
Section 23	Active	Compressor Station	23	5	4	NESE
Section 34	Active	Compressor Station	34	5	4	NENW
Section 7	Active	Compressor Station	7	5	4	NWSW
Skitzy	Active	Compressor Station	3	5	6	SWSW
Ute Pipeline	Active	Compressor Station	22	5	4	NWSW
Ute Pipeline 21	Active	Compressor Station	21	5	5	NENE
Ute Pipeline 7	Active	Compressor Station	7	5	5	NESW

STATE OF UTAH
DEPARTMENT OF NATURAL RESOURCES
DIVISION OF OIL, GAS AND MINING

FORM 9

SUNDRY NOTICES AND REPORTS ON WELLS

Do not use this form for proposals to drill new wells, significantly deepen existing wells below current bottom-hole depth, reenter plugged wells, or to drill horizontal laterals. Use APPLICATION FOR PERMIT TO DRILL form for such proposals.

5. LEASE DESIGNATION AND SERIAL NUMBER: see attached list

6. IF INDIAN, ALLOTTEE OR TRIBE NAME:

7. UNIT or CA AGREEMENT NAME:

1. TYPE OF WELL: OIL WELL ☐ GAS WELL ☐ OTHER see attached

8. WELL NAME and NUMBER: see attached list

2. NAME OF OPERATOR: LINN OPERATING, LLC N4365

9. API NUMBER:

3. ADDRESS OF OPERATOR: 600 TRAVIS ST., SUITE 140 CITY HOUSTON STATE TX ZIP 77002

PHONE NUMBER: (281) 840-4000

10. FIELD AND POOL, OR WILDCAT:

4. LOCATION OF WELL

FOOTAGES AT SURFACE:

COUNTY: Duchesne

QTR/QTR, SECTION, TOWNSHIP, RANGE, MERIDIAN:

STATE: UTAH

11. CHECK APPROPRIATE BOXES TO INDICATE NATURE OF NOTICE, REPORT, OR OTHER DATA

TYPE OF SUBMISSION	TYPE OF ACTION		
☑ NOTICE OF INTENT (Submit in Duplicate)	☐ ACIDIZE	☐ DEEPEN	☐ REPERFORATE CURRENT FORMATION
Approximate date work will start: _____	☐ ALTER CASING	☐ FRACTURE TREAT	☐ SIDETRACK TO REPAIR WELL
	☐ CASING REPAIR	☐ NEW CONSTRUCTION	☐ TEMPORARILY ABANDON
	☐ CHANGE TO PREVIOUS PLANS	☑ OPERATOR CHANGE	☐ TUBING REPAIR
	☐ CHANGE TUBING	☐ PLUG AND ABANDON	☐ VENT OR FLARE
☐ SUBSEQUENT REPORT (Submit Original Form Only)	☐ CHANGE WELL NAME	☐ PLUG BACK	☐ WATER DISPOSAL
Date of work completion: _____	☐ CHANGE WELL STATUS	☐ PRODUCTION (START/RESUME)	☐ WATER SHUT-OFF
	☐ COMMINGLE PRODUCING FORMATIONS	☐ RECLAMATION OF WELL SITE	☐ OTHER: _____
	☐ CONVERT WELL TYPE	☐ RECOMPLETE - DIFFERENT FORMATION	

12. DESCRIBE PROPOSED OR COMPLETED OPERATIONS. Clearly show all pertinent details including dates, depths, volumes, etc.

Effective March 1, 2017, we respectfully submit for your review a Change of Operator from Linn Operating, Inc. to Linn Operating, LLC.

Attached is a list of wells that are associated with this Change of Operator. The bonds covering these wells are State of Utah Surety Bond #K09515367, BIA Bond #B004292, BLM Bond #K09515124. All lease agreements remain in place, unchanged.

Linn Operating, Inc. (N4115)
600 Travis St., Suite 1400
Houston, Texas 77002
281-840-4000

RECEIVED
APR 11 2017
DIV. OF OIL, GAS & MINING

Jamin McNeil
Vice President, Sr. Operations

NAME (PLEASE PRINT) Nancy Fitzwater TITLE Regulatory Supervisor

SIGNATURE Nancy Fitzwater DATE 4/6/2017

(This space for State use only)

APPROVED
JUN 14 2017
DIV. OIL GAS & MINING
BY: Rachel Medina

(5/2000) (See Instructions on Reverse Side)

STATE OF UTAH
DEPARTMENT OF NATURAL RESOURCES
DIVISION OF OIL, GAS AND MINING

FORM 9

SUNDRY NOTICES AND REPORTS ON WELLS

Do not use this form for proposals to drill new wells, significantly deepen existing wells below current bottom-hole depth, reenter plugged wells, or to drill horizontal laterals. Use APPLICATION FOR PERMIT TO DRILL form for such proposals.

5. LEASE DESIGNATION AND SERIAL NUMBER: see attached list

6. IF INDIAN, ALLOTTEE OR TRIBE NAME:

7. UNIT or CA AGREEMENT NAME:

1. TYPE OF WELL: OIL WELL ☐ GAS WELL ☐ OTHER see attached

8. WELL NAME and NUMBER: see attached list

2. NAME OF OPERATOR: LINN OPERATING, LLC (N4365)

9. API NUMBER:

3. ADDRESS OF OPERATOR: 600 TRAVIS ST., SUITE 140 CITY HOUSTON STATE TX ZIP 77002

PHONE NUMBER: (281) 840-4000

10. FIELD AND POOL, OR WILDCAT:

4. LOCATION OF WELL

FOOTAGES AT SURFACE:

COUNTY: Duchesne

QTR/QTR, SECTION, TOWNSHIP, RANGE, MERIDIAN:

STATE: UTAH

11. CHECK APPROPRIATE BOXES TO INDICATE NATURE OF NOTICE, REPORT, OR OTHER DATA

TYPE OF SUBMISSION	TYPE OF ACTION		
☑ NOTICE OF INTENT (Submit in Duplicate)	☐ ACIDIZE	☐ DEEPEN	☐ REPERFORATE CURRENT FORMATION
Approximate date work will start:	☐ ALTER CASING	☐ FRACTURE TREAT	☐ SIDETRACK TO REPAIR WELL
	☐ CASING REPAIR	☐ NEW CONSTRUCTION	☐ TEMPORARILY ABANDON
	☐ CHANGE TO PREVIOUS PLANS	☑ OPERATOR CHANGE	☐ TUBING REPAIR
☐ SUBSEQUENT REPORT (Submit Original Form Only)	☐ CHANGE TUBING	☐ PLUG AND ABANDON	☐ VENT OR FLARE
Date of work completion:	☐ CHANGE WELL NAME	☐ PLUG BACK	☐ WATER DISPOSAL
	☐ CHANGE WELL STATUS	☐ PRODUCTION (START/RESUME)	☐ WATER SHUT-OFF
	☐ COMMINGLE PRODUCING FORMATIONS	☐ RECLAMATION OF WELL SITE	☐ OTHER:
	☐ CONVERT WELL TYPE	☐ RECOMPLETE - DIFFERENT FORMATION	

12. DESCRIBE PROPOSED OR COMPLETED OPERATIONS. Clearly show all pertinent details including dates, depths, volumes, etc.

Effective March 1, 2017, we respectfully submit for your review a Change of Operator from Linn Operating, Inc. to Linn Operating, LLC.

Attached is a list of surface facilities that are associated with this Change of Operator. The bonds covering these facilities are State of Utah Surety Bond #K09515367, BIA Bond #B004292, BLM Bond #K09515124. All lease agreements remain in place, unchanged.

Linn Operating, Inc. (N4115)
600 Travis St., Suite 1400
Houston, Texas 77002
281-840-4000

RECEIVED
APR 11 2017
DIV. OF OIL, GAS & MINING

Jamin McNeil
Vice President, Sr. Operations

NAME (PLEASE PRINT) Nancy Fitzwater TITLE Regulatory Supervisor

SIGNATURE Nancy Fitzwater DATE 4/6/2017

(This space for State use only)

APPROVED

JUN 14 2017

DIV. OIL GAS & MINING

BY: Rachel Medina

(5/2000)

(See Instructions on Reverse Side)

UPDATE ON SI WELLS FOR NAME CHANGE 4/10/17

Future Berry Petroleum Wells

Scofield Thorpe 22-41X Rig Skid:
Future Berry Petroleum well as of May 1st, 2017.

Scofield Thorpe 35-13
Future Berry Petroleum well as of May 1st, 2017.

Scofield Thorpe 23-31
Future Berry Petroleum well as of May 1st, 2017.

Wilcox Fee 15-16-56
Future Berry Petroleum well as of May 1st, 2017.

LC Fee 8-15D-56
Future Berry Petroleum well as of May 1st, 2017.

CC Fee 7R-28-38
Future Berry Petroleum well as of May 1st, 2017.

Taylor Fee 7-14-56
Future Berry Petroleum well as of May 1st, 2017.

SFW Fee 13-10D-54
Future Berry Petroleum well as of May 1st, 2017.

LINN Energy Wells

Mark 2-25A2
Received approved LINN Energy budget this month. Repair work under review.

Mitchell 2-4B1
Received approved LINN Energy budget this month. Repair work under review.

Galloway #2-14B2
Reclaim existing pit in Q2 2017. Project delayed due to winter weather.

Hamblin 2-26-A2
Received approved LINN Energy budget this month. Repair work under review.

LINN Energy

STATE OF UTAH SHUT IN LIST ESTIMATED P/A COSTS

4/10/2017

WELLNAME	FUTURE OPERATOR		ESTIMATED P/A COSTS
Scofield Thorpe 22-41X Rig Skid	Berry Petroleum Company	$	45,000
Scofield Thorpe 35-13	Berry Petroleum Company	$	45,000
Scofield Thorpe 23-31	Berry Petroleum Company	$	45,000
SFW Fee 13-10D-54	Berry Petroleum Company	$	35,000
Wilcox Fee 15-16-56	Berry Petroleum Company	$	35,000
LC Fee 8-15D-56	Berry Petroleum Company	$	35,000
CC Fee 7R-28-38	Berry Petroleum Company	$	75,000
Taylor Fee 7-14-56	Berry Petroleum Company	$	35,000
	Berry Petroleum Company TOTAL	**$**	**350,000**
Mark 2-25A2	LINN Operating	$	75,000
Mitchell 2-4B1	LINN Operating	$	75,000
Galloway 2-14B2	LINN Operating	$	30,000
Hamblin 2-26A2	LINN Operating	$	75,000
	LINN Operating TOTAL	**$**	**255,000**

Rachel Medina <rachelmedina@utah.gov>

Linn Name Change and Berry Operator Change

2 messages

Rachel Medina <rachelmedina@utah.gov> Thu, Apr 20, 2017 at 11:58 AM
To: Dustin Doucet <dustindoucet@utah.gov>, Randy Thackeray <randythackeray@utah.gov>

Dustin,

Linn is planning on moving all the wells from Linn Inc. to Linn LLC, then complete an operator change for the Berry wells. Eight of the wells on the non-compliance list will be move to Berry. Are you okay with us moving all the wells to Berry, putting the eight wells on the blanket bond, then getting the shut in plans and full cost bond when the move to Berry is complete?

The blanket bond and full cost bonding for the Linn wells will of course be in place before we complete the move.

Attached is the plugging estimates for all twelve wells, as well as a list of which wells are going to the new Linn and Berry. They have some details on what they plan to do with the wells on the Update list. Will this be acceptable for a shut in plan and plugging estimates?

--
Rachel Medina
Division of Oil, Gas & Mining
Bonding Technician
801-538-5260

20170420110137.pdf
58K

Dustin Doucet <dustindoucet@utah.gov> Thu, Apr 27, 2017 at 10:40 AM
To: Rachel Medina <rachelmedina@utah.gov>
Cc: Randy Thackeray <randythackeray@utah.gov>

I'm o.k. with those amounts. They should send in their plans for the wells.
[Quoted text hidden]

--
Dustin K. Doucet
Petroleum Engineer
Division of Oil, Gas and Mining
1594 West North Temple, Ste 1210
Salt Lake City, Utah 84116
801.538.5281 (ofc)
801.359.3940 (fax)

web: www.ogm.utah.gov

600 Travis, Suite 1400
Houston, TX 77002
phone: (281) 840-4000
fax: (281) 840-4001

RECEIVED
MAY 30 2017
DIV. OF OIL, GAS & MINING

May 25, 2017

Mr. Dustin Doucet
State of Utah – DNR
Division of Oil, Gas and Mining
1594 West North Temple
Salt Lake City, Utah 84116

Re: Extended Shut-in and Temporary Abandoned Well Requirements for Fee or State Leases
Four (4) Fee Lease Wells (see attachment A)

Dear Mr. Doucet:

In response to your request for more detailed six (6) month plans, Linn respectfully submits the following plans to bring these wells into compliance:

Mark 2-25A2
Plan to P/A this well. A sundry will be submitted in June 2017 and the P/A work will be completed by September 30, 2017.

Mitchell 2-4B1
Plan to return well to production. This repair work will be completed by June 30, 2017.

Galloway #2-14B2
The existing pit will be reclaimed in May 2017. We are requesting a T/A extension through December 2018 on this well to maintain the constructed surface location and surface pipe. This will allow for review of results from planned horizontal drilling this year to provide a detailed plan for this wellbore.

Hamblin 2-26-A2
Plan to P/A this well. A sundry will be submitted in June 2017 and the P/A work will be completed by September 30, 2017.

Linn appreciates your time and consideration. If you require any additional information please do not hesitate to contact me at 281-840-4266 or by e-mail at nfitzwater@linnenergy.com.

LINN OPERATING, LLC

Nancy Fitzwater

Nancy Fitzwater
Regulatory Supervisor

Rachel Medina <rachelmedina@utah.gov>

Linn's Shut-In Plan

2 messages

Rachel Medina <rachelmedina@utah.gov> Fri, Jun 2, 2017 at 9:56 AM
To: Dustin Doucet <dustindoucet@utah.gov>

Hi Dustin,

Attached is the shut in plan that Linn has for the four wells they will be keeping. Is this enough for me to complete the Linn, Inc, to Linn, LLC operator change?

--
Rachel Medina
Division of Oil, Gas & Mining
Bonding Technician
801-538-5260

20170602090508.pdf
56K

Dustin Doucet <dustindoucet@utah.gov> Mon, Jun 5, 2017 at 11:26 AM
To: Rachel Medina <rachelmedina@utah.gov>

Looks good.
[Quoted text hidden]
--
Dustin K. Doucet
Petroleum Engineer
Division of Oil, Gas and Mining
1594 West North Temple, Ste 1210
Salt Lake City, Utah 84116
801.538.5281 (ofc)
801.359.3940 (fax)

web: www.ogm.utah.gov

Division of Oil, Gas and Mining
Operator Change/Name Change Worksheet-for State use only

Effective Date: 5/1/2017

FORMER OPERATOR:	NEW OPERATOR:
Linn Operating, LLC 600 Travis Street, Suite 1400 Houston, TX 77002	Berry Petroleum Company, LLc 5201 Truztun Avenue Bakersfield, CA 93309
CA Number(s):	Unit(s): Bradford Canyon, Berry Pilot EOR, Brundage Canyon

WELL INFORMATION:

Well Name	Sec	TWN	RNG	API	Entity	Mineral	Surface	Type	Status
See Attached List									

OPERATOR CHANGES DOCUMENTATION:

1. Sundry or legal documentation was received from the **FORMER** operator on: 4/21/2017
2. Sundry or legal documentation was received from the **NEW** operator on: 4/21/2017
3. New operator Division of Corporations Business Number: 9783541-0161

REVIEW:

1. Surface Agreement Sundry from **NEW** operator on Fee Surface wells received on: 4/21/2017
2. Receipt of Acceptance of Drilling Procedures for APD on: 4/21/2017
3. Reports current for Production/Disposition & Sundries: 6/27/2017
4. OPS/SI/TA well(s) reviewed for full cost bonding: 4/22/2017
5. UIC5 on all disposal/injection/storage well(s) approved on: 5/25/2017
6. Surface Facility(s) included in operator change:
   Section 23
   ~~Unnamed~~ Section 7
   Section 22
   Section 21
   Davis Hollow
   Scofield
   Section 34
   Ute Pipeline
   Ute Pipeline 21
   Ute Pipeline 7
   Skitzy
   Linn Energy, LLC-Gas Plant
7. Inspections of PA state/fee well sites complete on (only upon operators request): All bonded

NEW OPERATOR BOND VERIFICATION:

3.State/fee well(s) covered by Bond Number(s):
   B010538-Blanket
   B010630
   B010629
   B010628
   B010627
   B010626
   B010625
   B010624
   B010623

DATA ENTRY:

1. Well(s) update in the RBDMS on: 6/27/2017
2. Group(s) update in RDBMS on: 6/27/2017
3. Surface Facilities update in RBDMS on: 6/29/2017

COMMENTS:

STATE OF UTAH
DEPARTMENT OF NATURAL RESOURCES
DIVISION OF OIL, GAS AND MINING

FORM 9

SUNDRY NOTICES AND REPORTS ON WELLS

Do not use this form for proposals to drill new wells, significantly deepen existing wells below current bottom-hole depth, reenter plugged wells, or to drill horizontal laterals. Use APPLICATION FOR PERMIT TO DRILL form for such proposals.

1 TYPE OF WELL: OIL WELL ☐ GAS WELL ☐ OTHER see attached

2 NAME OF OPERATOR: BERRY PETROLEUM COMPANY, LLC

3 ADDRESS OF OPERATOR: 5201 TRUXTUN AVENUE BAKERSFIELD CA 93309

PHONE NUMBER: (661) 616-3900

4 LOCATION OF WELL

FOOTAGES AT SURFACE

QTR/QTR, SECTION TOWNSHIP RANGE MERIDIAN

5 LEASE DESIGNATION AND SERIAL NUMBER: see attached list

6 IF INDIAN, ALLOTTEE OR TRIBE NAME

7 UNIT or CA AGREEMENT NAME

8 WELL NAME and NUMBER: see attached list

9 API NUMBER

10 FIELD AND POOL, OR WILDCAT

COUNTY Duchesne

STATE UTAH

11 CHECK APPROPRIATE BOXES TO INDICATE NATURE OF NOTICE, REPORT, OR OTHER DATA

TYPE OF SUBMISSION	TYPE OF ACTION		
☑ NOTICE OF INTENT (Submit in Duplicate)	☐ ACIDIZE	☐ DEEPEN	☐ REPERFORATE CURRENT FORMATION
Approximate date work will start:	☐ ALTER CASING	☐ FRACTURE TREAT	☐ SIDETRACK TO REPAIR WELL
	☐ CASING REPAIR	☐ NEW CONSTRUCTION	☐ TEMPORARILY ABANDON
	☐ CHANGE TO PREVIOUS PLANS	☑ OPERATOR CHANGE	☐ TUBING REPAIR
☐ SUBSEQUENT REPORT (Submit Original Form Only)	☐ CHANGE TUBING	☐ PLUG AND ABANDON	☐ VENT OR FLARE
Date of work completion	☐ CHANGE WELL NAME	☐ PLUG BACK	☐ WATER DISPOSAL
	☐ CHANGE WELL STATUS	☐ PRODUCTION (START/RESUME)	☐ WATER SHUT-OFF
	☐ COMMINGLE PRODUCING FORMATIONS	☐ RECLAMATION OF WELL SITE	☐ OTHER:
	☐ CONVERT WELL TYPE	☐ RECOMPLETE - DIFFERENT FORMATION	

12 DESCRIBE PROPOSED OR COMPLETED OPERATIONS. Clearly show all pertinent details including dates depths volumes, etc.

Effective May 1, 2017, we respectfully submit for your review a Change of Operator from Linn Operating, LLC (N4365) to Berry Petroleum Company, LLC (N4075).

Attached is a list of surface facilities that are associated with this Change of Operator. The bonds covering these facilities are State of Utah Surety Bond #B010538, BIA Bond #B010546, BLM Bond #B010580.

Linn Operating, LLC (N4365)
600 Travis St., Suite 1400
Houston, Texas 77002
281-840-4000

RECEIVED
APR 21 2017
DIV. OF OIL, GAS & MINING

Jamin McNeil
Vice President, Sr. Operations

NAME (PLEASE PRINT) Steve Wilson TITLE CFO

SIGNATURE DATE April 20, 2017

(This space for State use only)

APPROVED
JUN 27 2017
DIV. OIL GAS & MINING
BY: Rachel Medina

(5/2000) (See Instructions on Reverse Side)

From: Linn Operating, LLC
To: Berry Petroleum Company, LLC
Effective:May 1, 2017

Well Name	API	Town	Twp Dir	Range	Rng Dir	Sec	Entity Number	Well Type	Well Status
Z and T UTE TRIBAL 2-21	4301331280	5	S	4	W	21	11130	Water Injection Well	Active
Z and T UTE TRIBAL 10-21	4301331283	5	S	4	W	21	11133	Water Injection Well	Active
UTE TRIBAL 16-21-54	4301332381	5	S	4	W	21	13912	Water Injection Well	Active
UTE TRIBAL 7-21-54	4301332623	5	S	4	W	21	14383	Water Injection Well	Active
UTE TRIBAL 12-30-54	4301332747	5	S	4	W	30	14747	Water Injection Well	Active
UTE TRIBAL 14-30-54	4301332748	5	S	4	W	30	14778	Water Injection Well	Active
UTE TRIBAL 10-30D-54	4301332893	5	S	4	W	30	15246	Water Injection Well	Active
UTE TRIBAL 6-30-54	4301332975	5	S	4	W	30	15300	Water Injection Well	Active
UTE TRIBAL 9-21-54	4301333040	5	S	4	W	21	15360	Water Injection Well	Active
UTE TRIBAL 15-21-54	4301333114	5	S	4	W	21	15441	Water Injection Well	Active
UTE TRIBAL 1-21-54	4301333388	5	S	4	W	21	15937	Water Injection Well	Active
UTE TRIBAL 15-28D-55	4301333623	5	S	5	W	28		Oil Well	Approved Permit
LC TRIBAL 13H-9-56	4301350874	5	S	6	W	10		Oil Well	Approved Permit
LC TRIBAL 4H-26-56	4301350951	5	S	6	W	26		Oil Well	Approved Permit
LC TRIBAL 5H-34-45	4301350974	4	S	5	W	34		Oil Well	Approved Permit
LC TRIBAL 11-34-45	4301350975	4	S	5	W	34		Oil Well	Approved Permit
CC TRIBAL 4-30D-38	4301350993	3	S	8	W	19		Oil Well	Approved Permit
FEDERAL 4-1-65	4301351016	6	S	5	W	1		Oil Well	Approved Permit
LC TRIBAL 13H-28-45	4301351061	4	S	5	W	28		Oil Well	Approved Permit
LC TRIBAL 5H-23-45	4301351071	4	S	5	W	23		Oil Well	Approved Permit
LC TRIBAL 4H-27-45	4301351072	4	S	5	W	27		Oil Well	Approved Permit
LC TRIBAL 16-27-45	4301351074	4	S	5	W	27		Oil Well	Approved Permit
LC TRIBAL 12-27-45	4301351075	4	S	5	W	27		Oil Well	Approved Permit
LC TRIBAL 16-23-45	4301351077	4	S	5	W	23		Oil Well	Approved Permit
LC TRIBAL 12H-30-56	4301351133	5	S	6	W	30		Oil Well	Approved Permit
LC TRIBAL 5H-33-45	4301351338	4	S	5	W	33		Oil Well	Approved Permit
LC TRIBAL 6-16D-56	4301351406	5	S	6	W	16		Oil Well	Approved Permit
LC TRIBAL 3-14D-56	4301351408	5	S	6	W	14		Oil Well	Approved Permit
LC TRIBAL 13-6D-57	4301351417	5	S	7	W	6		Oil Well	Approved Permit
LC TRIBAL 9-23-45	4301351432	4	S	5	W	23		Oil Well	Approved Permit
LC TRIBAL 5-28D-56	4301351441	5	S	6	W	29		Oil Well	Approved Permit
LC TRIBAL 15-20D-56	4301351443	5	S	6	W	29		Oil Well	Approved Permit
LC Tribal 16-33-45	4301351463	4	S	5	W	33		Oil Well	Approved Permit
LC TRIBAL 7-23D-56	4301351479	5	S	6	W	23		Oil Well	Approved Permit
LC TRIBAL 4-7-56	4301351482	5	S	6	W	7		Oil Well	Approved Permit
LC TRIBAL 3-2-56	4301351483	5	S	6	W	2		Oil Well	Approved Permit
CC TRIBAL 15-34D-38	4301351490	4	S	8	W	2		Oil Well	Approved Permit
CC TRIBAL 14-35D-38	4301351491	4	S	8	W	2		Oil Well	Approved Permit
CC TRIBAL 8-3D-48	4301351493	4	S	8	W	2		Oil Well	Approved Permit
LC TRIBAL 1-10D-56	4301351510	5	S	6	W	10		Oil Well	Approved Permit
LC TRIBAL 3-10D-56	4301351511	5	S	6	W	10		Oil Well	Approved Permit
LC TRIBAL 7-10D-56	4301351512	5	S	6	W	10		Oil Well	Approved Permit
LC TRIBAL 9-29D-56	4301351513	5	S	6	W	29		Oil Well	Approved Permit

From: Linn Operating, LLC
To: Berry Petroleum Company, LLC
Effective:May 1, 2017

UTE TRIBAL 1-16-55	4301351519	5	S	5	W	16		Oil Well	Approved Permit
LC TRIBAL 1-17-56	4301351704	5	S	6	W	17		Oil Well	Approved Permit
LC Tribal 4HW-8-56	4301351710	5	S	6	W	8		Oil Well	Approved Permit
LC TRIBAL 3-11D-56	4301351713	5	S	6	W	11		Oil Well	Approved Permit
LC TRIBAL 7-11D-56	4301351714	5	S	6	W	11		Oil Well	Approved Permit
LC TRIBAL 9-34D-45	4301351717	4	S	5	W	34		Oil Well	Approved Permit
LC TRIBAL 4-34D-45	4301351723	4	S	5	W	34		Oil Well	Approved Permit
LC TRIBAL 7-34D-45	4301351724	4	S	5	W	34		Oil Well	Approved Permit
LC TRIBAL 13-34D-45	4301351747	4	S	5	W	34		Oil Well	Approved Permit
LC TRIBAL 12-31D-56	4301351799	5	S	6	W	31		Oil Well	Approved Permit
LC TRIBAL 8-20D-56	4301351800	5	S	6	W	20		Oil Well	Approved Permit
LC TRIBAL 6-31D-56	4301351801	5	S	6	W	31		Oil Well	Approved Permit
LC Tribal 11-7D-57	4301351814	5	S	7	W	7		Oil Well	Approved Permit
LC Tribal 5-7D-57	4301351815	5	S	7	W	7		Oil Well	Approved Permit
LC Tribal 11-6D-57	4301351817	5	S	7	W	6		Oil Well	Approved Permit
LC Tribal 8-33-45	4301351859	4	S	5	W	33		Oil Well	Approved Permit
LC Tribal 7-23D-45	4301351865	4	S	5	W	23		Oil Well	Approved Permit
LC Tribal 1-23D-56	4301351866	5	S	6	W	23		Oil Well	Approved Permit
LC TRIBAL 1-19-56	4301351867	5	S	6	W	19		Oil Well	Approved Permit
LC TRIBAL 7-19D-56	4301351868	5	S	6	W	19		Oil Well	Approved Permit
LC TRIBAL 9-4D-56	4301351869	5	S	6	W	4		Oil Well	Approved Permit
LC Tribal 14-32D-45	4301351879	4	S	5	W	32		Oil Well	Approved Permit
LC TRIBAL 7-17D-56	4301351886	5	S	6	W	17		Oil Well	Approved Permit
LC TRIBAL 5-17D-56	4301351887	5	S	6	W	17		Oil Well	Approved Permit
LC TRIBAL 9-2D-56	4301351893	5	S	6	W	2		Oil Well	Approved Permit
LC TRIBAL 1-2D-56	4301351894	5	S	6	W	2		Oil Well	Approved Permit
LC Tribal 15-23D-45	4301351895	4	S	5	W	23		Oil Well	Approved Permit
LC TRIBAL 11-34D-56	4301351900	5	S	6	W	34		Oil Well	Approved Permit
LC TRIBAL 9-5D-56	4301351901	5	S	6	W	4		Oil Well	Approved Permit
LC Tribal 10-28D-45	4301351903	4	S	5	W	28		Oil Well	Approved Permit
LC TRIBAL 13-20D-56	4301351904	5	S	6	W	20		Oil Well	Approved Permit
Ute Tribal 14-17-55	4301351908	5	S	5	W	17		Oil Well	Approved Permit
Federal 14-7D-65	4301351910	5	S	6	W	31		Oil Well	Approved Permit
LC Tribal 3-27D-45	4301351911	4	S	5	W	27		Oil Well	Approved Permit
LC TRIBAL 9-34D-56	4301351914	5	S	6	W	34		Oil Well	Approved Permit
LC Tribal 10-33D-45	4301351939	4	S	5	W	33		Oil Well	Approved Permit
LC Tribal 14-33D-45	4301351940	4	S	5	W	33		Oil Well	Approved Permit
LC Tribal 10-27D-45	4301351941	4	S	5	W	27		Oil Well	Approved Permit
LC Tribal 14-27D-45	4301351951	4	S	5	W	27		Oil Well	Approved Permit
LC Tribal 6-33D-45	4301351955	4	S	5	W	33		Oil Well	Approved Permit
LC Tribal 6-32D-45	4301351956	4	S	5	W	32		Oil Well	Approved Permit
Federal 3-11D-65	4301351982	6	S	5	W	11		Oil Well	Approved Permit
Federal 2-4-64	4301351983	6	S	4	W	4		Oil Well	Approved Permit
Federal 5-11D-65	4301351984	6	S	5	W	11		Oil Well	Approved Permit

From: Linn Operating, LLC
To: Berry Petroleum Company, LLC
Effective:May 1, 2017

Federal 7-4D-64	4301351985	6	S	4	W	4		Oil Well	Approved Permit
Federal 3-4D-64	4301351986	6	S	4	W	4		Oil Well	Approved Permit
Federal 8-4D-64	4301351988	6	S	4	W	4		Oil Well	Approved Permit
Federal 6-4D-64	4301351989	6	S	4	W	4		Oil Well	Approved Permit
Federal 4-4D-64	4301351991	6	S	4	W	4		Oil Well	Approved Permit
Federal 9-4D-64	4301352004	6	S	4	W	4		Oil Well	Approved Permit
Federal 10-4D-64	4301352011	6	S	4	W	4		Oil Well	Approved Permit
Federal 1-4D-64	4301352025	6	S	4	W	4		Oil Well	Approved Permit
Federal 16-4D-64	4301352026	6	S	4	W	4		Oil Well	Approved Permit
LC Tribal 10-23D-45	4301352029	4	S	5	W	23		Oil Well	Approved Permit
Federal 15-4D-64	4301352032	6	S	4	W	4		Oil Well	Approved Permit
Federal 9-9D-64	4301352036	6	S	4	W	9		Oil Well	Approved Permit
Federal 10-9D-64	4301352041	6	S	4	W	9		Oil Well	Approved Permit
Federal 15-9D-64	4301352043	6	S	4	W	9		Oil Well	Approved Permit
Federal 16-9D-64	4301352044	6	S	4	W	9		Oil Well	Approved Permit
LC Tribal 10-32D-45	4301352065	4	S	5	W	32		Oil Well	Approved Permit
LC Tribal 16-28D-45	4301352073	4	S	5	W	28		Oil Well	Approved Permit
LC Tribal 15-24D-45	4301352074	4	S	5	W	24		Oil Well	Approved Permit
LC Tribal 13-17D-56	4301352076	5	S	6	W	17		Oil Well	Approved Permit
LC Tribal 15-17D-56	4301352077	5	S	6	W	17		Oil Well	Approved Permit
LC Tribal 5-26D-56	4301352097	5	S	6	W	26		Oil Well	Approved Permit
LC Tribal 11-26D-56	4301352098	5	S	6	W	26		Oil Well	Approved Permit
LC Tribal 4-9D-56	4301352102	5	S	6	W	9		Oil Well	Approved Permit
LC Tribal 8-32D-45	4301352135	4	S	5	W	32		Oil Well	Approved Permit
UTE Tribal 15-24D-54	4301352156	5	S	4	W	24		Gas Well	Approved Permit
UTE Tribal 9-24D-54	4301352157	5	S	4	W	24		Gas Well	Approved Permit
UTE Tribal 1-25D-54	4301352173	5	S	4	W	25		Gas Well	Approved Permit
UTE Tribal 9-25D-54	4301352177	5	S	4	W	25		Gas Well	Approved Permit
Myrin Tribal 9-10D-55	4301352189	5	S	5	W	10		Oil Well	Approved Permit
Myrin Tribal 16-10D-55	4301352190	5	S	5	W	10		Oil Well	Approved Permit
Myrin Tribal 10-10D-55	4301352191	5	S	5	W	10		Oil Well	Approved Permit
UTE Tribal 1-24D-54	4301352304	5	S	4	W	24		Gas Well	Approved Permit
UTE Tribal 7-24D-54	4301352306	5	S	4	W	24		Gas Well	Approved Permit
UTE Tribal 12-25D-54	4301352308	5	S	4	W	25		Gas Well	Approved Permit
UTE Tribal 4-13D-54	4301352321	5	S	4	W	13		Gas Well	Approved Permit
UTE Tribal 13-25D-54	4301352322	5	S	4	W	25		Gas Well	Approved Permit
UTE Tribal 3-24D-54	4301352347	5	S	4	W	24		Gas Well	Approved Permit
UTE Tribal 5-24D-54	4301352348	5	S	4	W	24		Gas Well	Approved Permit
State Tribal 14-1D-55	4301352372	5	S	5	W	1		Oil Well	Approved Permit
State Tribal 11-1D-55	4301352373	5	S	5	W	1		Oil Well	Approved Permit
State Tribal 13-1D-55	4301352374	5	S	5	W	1		Oil Well	Approved Permit
State Tribal 12-2D-55	4301352391	5	S	5	W	2		Oil Well	Approved Permit
State Tribal 14-2D-55	4301352392	5	S	5	W	2		Oil Well	Approved Permit
State Tribal 13-2D-55	4301352393	5	S	5	W	2		Oil Well	Approved Permit

From: Linn Operating, LLC
To: Berry Petroleum Company, LLC
Effective:May 1, 2017

State Tribal 14-3D-55	4301352430	5	S	5	W	3		Oil Well	Approved Permit
State Tribal 11-3D-55	4301352434	5	S	5	W	3		Oil Well	Approved Permit
State Tribal 13-3D-55	4301352435	5	S	5	W	3		Oil Well	Approved Permit
UTE TRIBAL 2-5D-55	4301352450	5	S	5	W	5		Oil Well	Approved Permit
Ute Tribal 1-5D-55	4301352456	5	S	5	W	5		Oil Well	Approved Permit
Ute Tribal 7-5-55	4301352459	5	S	5	W	5		Oil Well	Approved Permit
Ute Tribal 3-16D-54	4301352467	5	S	4	W	9		Oil Well	Approved Permit
State Tribal 1-3D-55	4301352471	5	S	5	W	3		Oil Well	Approved Permit
State Tribal 2-3D-55	4301352472	5	S	5	W	3		Oil Well	Approved Permit
State Tribal 7-3D-55	4301352473	5	S	5	W	3		Oil Well	Approved Permit
State Tribal 8-3D-55	4301352474	5	S	5	W	3		Oil Well	Approved Permit
Ute Tribal 2-16D-54	4301352481	5	S	4	W	9		Oil Well	Approved Permit
State Tribal 3-3D-55	4301352532	5	S	5	W	3		Oil Well	Approved Permit
State Tribal 4-3D-55	4301352533	5	S	5	W	3		Oil Well	Approved Permit
State Tribal 5-3D-55	4301352535	5	S	5	W	3		Oil Well	Approved Permit
State Tribal 6-3D-55	4301352536	5	S	5	W	3		Oil Well	Approved Permit
UTE TRIBAL 15-12D-55	4301352549	5	S	5	W	12		Oil Well	Approved Permit
Ute Tribal 9-11D-55	4301352564	5	S	5	W	11		Oil Well	Approved Permit
UTE TRIBAL 10-11D-55	4301352566	5	S	5	W	11		Oil Well	Approved Permit
UTE TRIBAL 15-11D-55	4301352567	5	S	5	W	11		Oil Well	Approved Permit
UTE TRIBAL 14-12D-55	4301352592	5	S	5	W	12		Oil Well	Approved Permit
UTE TRIBAL 13-12D-55	4301352593	5	S	5	W	12		Oil Well	Approved Permit
UTE TRIBAL 10-11D-54	4301352603	5	S	4	W	11		Oil Well	Approved Permit
UTE TRIBAL 9-11D-54	4301352604	5	S	4	W	11		Oil Well	Approved Permit
UTE TRIBAL 15-11-54	4301352605	5	S	4	W	11		Oil Well	Approved Permit
UTE TRIBAL 16-11D-54	4301352606	5	S	4	W	11		Oil Well	Approved Permit
UTE TRIBAL 14-11D-55	4301352610	5	S	5	W	11		Oil Well	Approved Permit
UTE TRIBAL 13-11D-55	4301352611	5	S	5	W	11		Oil Well	Approved Permit
UTE TRIBAL 12-11D-55	4301352612	5	S	5	W	11		Oil Well	Approved Permit
UTE TRIBAL 11-11D-55	4301352613	5	S	5	W	11		Oil Well	Approved Permit
Federal 6-7D-65	4301352682	6	S	5	W	7		Oil Well	Approved Permit
Federal 11-7D-65	4301352683	6	S	5	W	7		Oil Well	Approved Permit
Federal 10-7D-65	4301352684	6	S	5	W	7		Oil Well	Approved Permit
Federal 7-7D-65	4301352685	6	S	5	W	7		Oil Well	Approved Permit
UTE TRIBAL 4-17D-55	4301352695	5	S	5	W	17		Oil Well	Approved Permit
UTE TRIBAL 14-13D-54	4301352702	5	S	4	W	13		Oil Well	Approved Permit
State Tribal 3-11D-55	4301352704	5	S	5	W	11		Oil Well	Approved Permit
State Tribal 4-11D-55	4301352705	5	S	5	W	11		Oil Well	Approved Permit
State Tribal 5-11D-55	4301352706	5	S	5	W	11		Oil Well	Approved Permit
State Tribal 6-11D-55	4301352707	5	S	5	W	11		Oil Well	Approved Permit
State Tribal 8-11D-55	4301352708	5	S	5	W	11		Oil Well	Approved Permit
State Tribal 7-11D-55	4301352709	5	S	5	W	11		Oil Well	Approved Permit
State Tribal 2-11D-55	4301352710	5	S	5	W	11		Oil Well	Approved Permit
State Tribal 1-11D-55	4301352711	5	S	5	W	11		Oil Well	Approved Permit

From: Linn Operating, LLC
To: Berry Petroleum Company, LLC
Effective:May 1, 2017

UTE TRIBAL 9-4D-55	4301352713	5	S	5	W	4		Oil Well	Approved Permit
State Tribal 2-10D-55	4301352714	5	S	5	W	10		Oil Well	Approved Permit
State Tribal 7-10D-55	4301352715	5	S	5	W	10		Oil Well	Approved Permit
State Tribal 8-10D-55	4301352716	5	S	5	W	10		Oil Well	Approved Permit
UTE TRIBAL 10-4D-55	4301352717	5	S	5	W	4		Oil Well	Approved Permit
UTE TRIBAL 15-4D-55	4301352718	5	S	5	W	4		Oil Well	Approved Permit
State Tribal 1-10D-55	4301352720	5	S	5	W	10		Oil Well	Approved Permit
UTE TRIBAL 16-4D-55	4301352721	5	S	5	W	4		Oil Well	Approved Permit
State Tribal 3-10D-55	4301352723	5	S	5	W	10		Oil Well	Approved Permit
State Tribal 4-10D-55	4301352724	5	S	5	W	10		Oil Well	Approved Permit
State Tribal 5-10D-55	4301352725	5	S	5	W	10		Oil Well	Approved Permit
State Tribal 6-10D-55	4301352726	5	S	5	W	10		Oil Well	Approved Permit
UTE TRIBAL 11-5D-55	4301352727	5	S	5	W	5		Oil Well	Approved Permit
UTE TRIBAL 12-5D-55	4301352728	5	S	5	W	5		Oil Well	Approved Permit
UTE TRIBAL 13-5D-55	4301352729	5	S	5	W	5		Oil Well	Approved Permit
UTE TRIBAL 14-5D-55	4301352730	5	S	5	W	5		Oil Well	Approved Permit
State Tribal 15-2D-55	4301352732	5	S	5	W	2		Oil Well	Approved Permit
State Tribal 16-2D-55	4301352733	5	S	5	W	2		Oil Well	Approved Permit
State Tribal 9-2D-55	4301352735	5	S	5	W	2		Oil Well	Approved Permit
UTE TRIBAL 16-30D-55	4301352738	5	S	5	W	30		Oil Well	Approved Permit
Myrin Tribal 9-19D-55	4301352739	5	S	5	W	19		Oil Well	Approved Permit
State Tribal 16-3D-55	4301352740	5	S	5	W	3		Oil Well	Approved Permit
State Tribal 15-3D-55	4301352741	5	S	5	W	3		Oil Well	Approved Permit
State Tribal 10-3D-55	4301352742	5	S	5	W	3		Oil Well	Approved Permit
State Tribal 9-3D-55	4301352743	5	S	5	W	3		Oil Well	Approved Permit
Myrin Tribal 15-19D-55	4301352744	5	S	5	W	19		Oil Well	Approved Permit
Myrin Tribal 13-19D-55	4301352745	5	S	5	W	19		Oil Well	Approved Permit
Myrin Tribal 12-19D-55	4301352746	5	S	5	W	19		Oil Well	Approved Permit
UTE TRIBAL 5-4D-55	4301352747	5	S	5	W	4		Oil Well	Approved Permit
UTE TRIBAL 4-4D-55	4301352748	5	S	5	W	4		Oil Well	Approved Permit
UTE TRIBAL 3-4D-55	4301352749	5	S	5	W	4		Oil Well	Approved Permit
UTE TRIBAL 6-4D-55	4301352754	5	S	5	W	4		Oil Well	Approved Permit
UTE TRIBAL 7-31D-55	4301352764	5	S	5	W	31		Oil Well	Approved Permit
Myrin Tribal 11-19D-55	4301352765	5	S	5	W	19		Oil Well	Approved Permit
UTE TRIBAL 4-30D-55	4301352796	5	S	5	W	30		Oil Well	Approved Permit
UTE TRIBAL 5-30D-55	4301352797	5	S	5	W	30		Oil Well	Approved Permit
UTE TRIBAL 7-30D-55	4301352799	5	S	5	W	30		Oil Well	Approved Permit
UTE TRIBAL 1-30D-55	4301352809	5	S	5	W	30		Oil Well	Approved Permit
LC TRIBAL 6-25D-56	4301352810	5	S	6	W	25		Oil Well	Approved Permit
LC TRIBAL 4-25D-56	4301352812	5	S	6	W	25		Oil Well	Approved Permit
Federal 6-13D-65	4301352813	6	S	5	W	13		Oil Well	Approved Permit
Federal 4-13D-65	4301352814	6	S	5	W	13		Oil Well	Approved Permit
Federal 3-13D-65	4301352815	6	S	5	W	13		Oil Well	Approved Permit
Federal 3-16D-64	4301352823	6	S	4	W	16		Oil Well	Approved Permit

From: Linn Operating, LLC
To: Berry Petroleum Company, LLC
Effective:May 1, 2017

Federal 4-16D-64	4301352824	6	S	4	W	16		Oil Well	Approved Permit
Federal 5-16D-64	4301352825	6	S	4	W	16		Oil Well	Approved Permit
Federal 6-16D-64	4301352826	6	S	4	W	16		Oil Well	Approved Permit
Federal 5-13D-65	4301352827	6	S	5	W	13		Oil Well	Approved Permit
LC TRIBAL 1-25D-56	4301352835	5	S	6	W	25		Oil Well	Approved Permit
LC TRIBAL 2-25D-56	4301352836	5	S	6	W	25		Oil Well	Approved Permit
LC TRIBAL 8-25D-56	4301352837	5	S	6	W	25		Oil Well	Approved Permit
LC TRIBAL 9-25D-56	4301352840	5	S	6	W	25		Oil Well	Approved Permit
LC TRIBAL 15-25-56	4301352844	5	S	6	W	25		Oil Well	Approved Permit
Federal 9-5D-65	4301352846	6	S	5	W	5		Oil Well	Approved Permit
Federal 10-5D-65	4301352847	6	S	5	W	5		Oil Well	Approved Permit
LC TRIBAL 16-25D-56	4301352848	5	S	6	W	25		Oil Well	Approved Permit
LC TRIBAL 10-25D-56	4301352849	5	S	6	W	25		Oil Well	Approved Permit
UTE TRIBAL 8-30D-55	4301352855	5	S	5	W	29		Oil Well	Approved Permit
UTE TRIBAL 9-29D-55	4301352870	5	S	5	W	29		Oil Well	Approved Permit
UTE TRIBAL 6-24D-55	4301352871	5	S	5	W	24		Oil Well	Approved Permit
UTE TRIBAL 16-17D-55	4301352872	5	S	5	W	17		Oil Well	Approved Permit
Federal 9-8D-64	4301352880	6	S	4	W	9		Oil Well	Approved Permit
Federal 16-8D-64	4301352881	6	S	4	W	9		Oil Well	Approved Permit
UTE TRIBAL 13-27D-55	4301352882	5	S	5	W	27		Oil Well	Approved Permit
UTE TRIBAL 4-29D-55	4301352883	5	S	5	W	29		Oil Well	Approved Permit
UTE TRIBAL 1-29D-55	4301352884	5	S	5	W	29		Oil Well	Approved Permit
Federal 4-2D-65	4301352885	6	S	5	W	2		Oil Well	Approved Permit
Federal 5-2D-65	4301352886	6	S	5	W	2		Oil Well	Approved Permit
Federal 12-2D-65	4301352887	6	S	5	W	2		Oil Well	Approved Permit
LC TRIBAL 12-25D-56	4301352888	5	S	6	W	25		Oil Well	Approved Permit
LC TRIBAL 13-25D-56	4301352890	5	S	6	W	25		Oil Well	Approved Permit
LC TRIBAL 14-25D-56	4301352891	5	S	6	W	25		Oil Well	Approved Permit
Federal 15-3D-65	4301352892	6	S	5	W	3		Oil Well	Approved Permit
Federal 9-3D-65	4301352893	6	S	5	W	3		Oil Well	Approved Permit
Federal 8-3D-65	4301352894	6	S	5	W	3		Oil Well	Approved Permit
Federal 6-3D-65	4301352895	6	S	5	W	3		Oil Well	Approved Permit
LC Nielsen Tribal 6-33D-56	4301352896	5	S	6	W	33		Oil Well	Approved Permit
LC Nielsen Tribal 2-33D-56	4301352897	5	S	6	W	33		Oil Well	Approved Permit
LC Nielsen Tribal 4-33D-56	4301352898	5	S	6	W	33		Oil Well	Approved Permit
LC Nielsen Tribal 5-33D-56	4301352899	5	S	6	W	33		Oil Well	Approved Permit
UTE FEE 13-9D-54	4301352906	5	S	4	W	9		Oil Well	Approved Permit
UTE FEE 2-34D-55	4301352971	5	S	5	W	27		Oil Well	Approved Permit
Federal 13-7D-65	4301352974	6	S	5	W	7		Oil Well	Approved Permit
Federal 14-7D-65	4301352975	6	S	5	W	7		Oil Well	Approved Permit
UTE TRIBAL 6-27D-55	4301352976	5	S	5	W	27		Oil Well	Approved Permit
LC Nielsen Tribal 12-27D-56	4301352977	5	S	6	W	27		Oil Well	Approved Permit
LC Nielsen Tribal 13-27D-56	4301352978	5	S	6	W	27		Oil Well	Approved Permit
LC Nielsen Tribal 16-28D-56	4301352979	5	S	6	W	27		Oil Well	Approved Permit

From: Linn Operating, LLC
To: Berry Petroleum Company, LLC
Effective:May 1, 2017

LC Nielsen Fee 9-28D-56	4301352980	5	S	6	W	27		Oil Well	Approved Permit
LC FEE 9-36D-56	4301352982	5	S	6	W	36		Oil Well	Approved Permit
LC FEE 15-36D-56	4301352983	5	S	6	W	36		Oil Well	Approved Permit
LC TRIBAL 6-36D-56	4301352984	5	S	6	W	36		Oil Well	Approved Permit
LC TRIBAL 5-36D-56	4301352985	5	S	6	W	36		Oil Well	Approved Permit
LC TRIBAL 4-36D-56	4301352986	5	S	6	W	36		Oil Well	Approved Permit
LC TRIBAL 3-36D-56	4301352987	5	S	6	W	36		Oil Well	Approved Permit
LC TRIBAL 2-35D-56	4301352988	5	S	6	W	35		Oil Well	Approved Permit
LC TRIBAL 1-35D-56	4301352989	5	S	6	W	35		Oil Well	Approved Permit
LC TRIBAL 9-35D-56	4301353018	5	S	6	W	35		Oil Well	Approved Permit
LC TRIBAL 6-35D-56	4301353019	5	S	6	W	35		Oil Well	Approved Permit
LC TRIBAL 10-35D-56	4301353020	5	S	6	W	35		Oil Well	Approved Permit
UTE TRIBAL 9-17D-55	4301353022	5	S	5	W	17		Oil Well	Approved Permit
LC TRIBAL 8-35D-56	4301353023	5	S	6	W	35		Oil Well	Approved Permit
UTE TRIBAL 10-17D-55	4301353024	5	S	5	W	17		Oil Well	Approved Permit
LC TRIBAL 7-35D-56	4301353025	5	S	6	W	35		Oil Well	Approved Permit
LC TRIBAL 5-35D-56	4301353026	5	S	6	W	35		Oil Well	Approved Permit
LC TRIBAL 15-35D-56	4301353027	5	S	6	W	35		Oil Well	Approved Permit
LC TRIBAL 16-35D-56	4301353028	5	S	6	W	35		Oil Well	Approved Permit
LC TRIBAL 3-35D-56	4301353029	5	S	6	W	35		Oil Well	Approved Permit
LC TRIBAL 4-35D-56	4301353030	5	S	6	W	35		Oil Well	Approved Permit
LC TRIBAL 14-35D-56	4301353036	5	S	6	W	35		Oil Well	Approved Permit
LC TRIBAL 13-35D-56	4301353038	5	S	6	W	35		Oil Well	Approved Permit
LC TRIBAL 12-35D-56	4301353039	5	S	6	W	35		Oil Well	Approved Permit
LC TRIBAL 11-35D-56	4301353040	5	S	6	W	35		Oil Well	Approved Permit
UTE TRIBAL 8-14D-55	4301353099	5	S	5	W	14		Oil Well	Approved Permit
LC FEE 13-36D-56	4301353114	5	S	6	W	36		Oil Well	Approved Permit
LC FEE 11-36D-56	4301353115	5	S	6	W	36		Oil Well	Approved Permit
LC Nielsen Fee 15-28D-56	4301353131	5	S	6	W	28		Oil Well	Approved Permit
UTE TRIBAL 3-20D-55	4301333280	5	S	5	W	20	18424	Oil Well	Drilling Operations Suspended
LC TRIBAL 4H-17-56	4301333540	5	S	6	W	17	18067	Oil Well	Drilling Operations Suspended
UTE TRIBAL 8-20D-55	4301333676	5	S	5	W	20	17308	Oil Well	Drilling Operations Suspended
UTE TRIBAL 14-14D-55	4301333699	5	S	5	W	14	18409	Oil Well	Drilling Operations Suspended
UTE TRIBAL 5-29D-55	4301333740	5	S	5	W	29	17306	Oil Well	Drilling Operations Suspended
UTE TRIBAL 7-32D-55	4301333794	5	S	5	W	32	18359	Oil Well	Drilling Operations Suspended
UTE TRIBAL 12-27D-55	4301333798	5	S	5	W	27	18360	Oil Well	Drilling Operations Suspended
BERRY TRIBAL 2-23D-54	4301333805	5	S	4	W	23	18546	Oil Well	Drilling Operations Suspended
UTE TRIBAL 13-29D-55	4301333807	5	S	5	W	29	18378	Oil Well	Drilling Operations Suspended
UTE TRIBAL 16-28D-55	4301333887	5	S	5	W	28	18594	Oil Well	Drilling Operations Suspended
FEDERAL 10-10D-65	4301350523	6	S	5	W	10	19773	Oil Well	Drilling Operations Suspended
LC FEE 8-15D-56	4301350597	5	S	6	W	15	19347	Oil Well	Drilling Operations Suspended
SFW FEE 13-10D-54	4301350892	5	S	4	W	10	19186	Oil Well	Drilling Operations Suspended
SFW TRIBAL 11-10D-54	4301350893	5	S	4	W	10	19215	Oil Well	Drilling Operations Suspended
LC TRIBAL 16-34D-45	4301350977	4	S	5	W	34	18658	Oil Well	Drilling Operations Suspended

From: Linn Operating, LLC
To: Berry Petroleum Company, LLC
Effective:May 1, 2017

LC TRIBAL 5-29D-56	4301351184	5	S	6	W	29		Oil Well	Drilling Operations Suspended
LC TRIBAL 2-33D-45	4301351402	4	S	5	W	33	18854	Oil Well	Drilling Operations Suspended
LC TRIBAL 9-24D-45	4301351431	4	S	5	W	24	18861	Oil Well	Drilling Operations Suspended
LC TRIBAL 9-3D-56	4301351514	5	S	6	W	3	18948	Oil Well	Drilling Operations Suspended
LC Tribal 3-34D-56	4301352087	5	S	6	W	34	19234	Oil Well	Drilling Operations Suspended
LC Tribal 7-34D-56	4301352088	5	S	6	W	34	19235	Oil Well	Drilling Operations Suspended
Ute Tribal 5-9D-54	4301352463	5	S	4	W	9	19354	Oil Well	Drilling Operations Suspended
Ute Tribal 3-9D-54	4301352464	5	S	4	W	9	19355	Oil Well	Drilling Operations Suspended
UTE TRIBAL 7-17D-55	4301352691	5	S	5	W	17	19691	Oil Well	Drilling Operations Suspended
UTE TRIBAL 6-17D-55	4301352692	5	S	5	W	17	19708	Oil Well	Drilling Operations Suspended
UTE TRIBAL 3-17D-55	4301352693	5	S	5	W	17	19709	Oil Well	Drilling Operations Suspended
UTE TRIBAL 2-17D-55	4301352694	5	S	5	W	17	19692	Oil Well	Drilling Operations Suspended
State Tribal 3-12D-55	4301352697	5	S	5	W	12	19667	Oil Well	Drilling Operations Suspended
State Tribal 4-12D-55	4301352698	5	S	5	W	12	19668	Oil Well	Drilling Operations Suspended
State Tribal 10-2D-55	4301352734	5	S	5	W	2	19710	Oil Well	Drilling Operations Suspended
LC TRIBAL 1-36D-56	4301353021	5	S	6	W	36		Oil Well	Drilling Operations Suspended
LC TRIBAL 8-36D-56	4301353034	5	S	6	W	36		Oil Well	Drilling Operations Suspended
LC TRIBAL 7-36D-56	4301353035	5	S	6	W	36		Oil Well	Drilling Operations Suspended
LC TRIBAL 2-36D-56	4301353037	5	S	6	W	36		Oil Well	Drilling Operations Suspended
UTE TRIBAL 13-17D-55	4301333550	5	S	5	W	17		Oil Well	Location Abandoned
UTE TRIBAL 11-14D-54	4301333596	5	S	4	W	14		Oil Well	Location Abandoned
UTE TRIBAL 16-17D-55	4301333622	5	S	5	W	17		Oil Well	Location Abandoned
LC TRIBAL 14-16D-56	4301334283	5	S	6	W	16		Oil Well	Location Abandoned
LC TRIBAL 3-23D-56	4301350624	5	S	6	W	23		Oil Well	Location Abandoned
FEDERAL 2-1D-64	4301350765	6	S	4	W	1		Oil Well	Location Abandoned
FEDERAL 7-1D-64	4301350766	6	S	4	W	1		Oil Well	Location Abandoned
FEDERAL 9-1D-64	4301350767	6	S	4	W	1		Oil Well	Location Abandoned
CC FEE 8-24-38	4301350885	3	S	8	W	24		Oil Well	Location Abandoned
LC FEE 4H-12-57	4301350952	5	S	7	W	12		Oil Well	Location Abandoned
CC TRIBAL 4-2-48	4301350964	4	S	8	W	2		Oil Well	Location Abandoned
LC TRIBAL 7-2D-56	4301350988	5	S	6	W	2		Oil Well	Location Abandoned
LC TRIBAL 10-18D-56	4301350989	5	S	6	W	18		Oil Well	Location Abandoned
LC TRIBAL 3-16D-56	4301351032	5	S	6	W	16		Oil Well	Location Abandoned
CC FEE 6-21-38	4301351059	3	S	8	W	21		Oil Well	Location Abandoned
LC TRIBAL 12H-19-56	4301351193	5	S	6	W	19		Oil Well	Location Abandoned
LC FEE 15-11D-56	4301351197	5	S	6	W	11		Oil Well	Location Abandoned
LC TRIBAL 13H-10-56	4301351209	5	S	6	W	11		Oil Well	Location Abandoned
LC TRIBAL 2-31D-45	4301351261	4	S	5	W	31		Oil Well	Location Abandoned
LC TRIBAL 13H-24-45	4301351273	4	S	5	W	24		Oil Well	Location Abandoned
UTE TRIBAL 6-21D-55	4301351274	5	S	5	W	21		Oil Well	Location Abandoned
UTE TRIBAL 15-16D-55	4301351284	5	S	5	W	16		Oil Well	Location Abandoned
UTE TRIBAL 4H-15-55	4301351292	5	S	5	W	15		Oil Well	Location Abandoned
UTE TRIBAL 13H-14-54	4301351297	5	S	4	W	14		Oil Well	Location Abandoned
UTE TRIBAL 1-32-55	4301351298	5	S	5	W	32		Oil Well	Location Abandoned

From: Linn Operating, LLC
To: Berry Petroleum Company, LLC
Effective:May 1, 2017

UTE TRIBAL 4-21D-55	4301351299	5	S	5	W	21		Oil Well	Location Abandoned
LC TRIBAL 12-33-45	4301351301	4	S	5	W	33		Oil Well	Location Abandoned
UTE TRIBAL 16-15D-55	4301351302	5	S	5	W	15		Oil Well	Location Abandoned
UTE TRIBAL 2-24-55	4301351304	5	S	5	W	24		Oil Well	Location Abandoned
LC TRIBAL 11-32D-56	4301351315	5	S	6	W	32		Oil Well	Location Abandoned
LC TRIBAL 1-32D-56	4301351317	5	S	6	W	32		Oil Well	Location Abandoned
LC TRIBAL 5H-32-56	4301351318	5	S	6	W	32		Oil Well	Location Abandoned
LC TRIBAL 14-28-45	4301351339	4	S	5	W	28		Oil Well	Location Abandoned
LC TRIBAL 16-32D-45	4301351340	4	S	5	W	32		Oil Well	Location Abandoned
LC TRIBAL 3-31-45	4301351347	4	S	5	W	31		Oil Well	Location Abandoned
LC TRIBAL 1-18D-56	4301351367	5	S	6	W	18		Oil Well	Location Abandoned
LC TRIBAL 9-18D-56	4301351368	5	S	6	W	18		Oil Well	Location Abandoned
LC FEE 9-23D-56	4301351380	5	S	6	W	23		Oil Well	Location Abandoned
LC TRIBAL 1-34D-45	4301351382	4	S	5	W	34		Oil Well	Location Abandoned
LC TRIBAL 12-21D-56	4301351383	5	S	6	W	21		Oil Well	Location Abandoned
LC TRIBAL 7-29D-56	4301351386	5	S	6	W	29		Oil Well	Location Abandoned
UTE TRIBAL 6-15-55	4301351399	5	S	5	W	15		Oil Well	Location Abandoned
UTE TRIBAL7-21D-55	4301351403	5	S	5	W	21		Oil Well	Location Abandoned
CC FEE 13-9D-37	4301351409	3	S	7	W	9		Oil Well	Location Abandoned
CC FEE 16-21D-38	4301351410	3	S	8	W	21		Oil Well	Location Abandoned
UTE TRIBAL 5H-10-54	4301351415	5	S	4	W	10		Oil Well	Location Abandoned
LC FEE 14-1-56	4301351457	5	S	6	W	1		Oil Well	Location Abandoned
LC TRIBAL 5-3D-56	4301351459	5	S	6	W	3		Oil Well	Location Abandoned
LC TRIBAL 12H-23-56	4301351488	5	S	6	W	23		Oil Well	Location Abandoned
LC TRIBAL 12HH-31-45	4301351499	4	S	5	W	32		Oil Well	Location Abandoned
CC Tribal 3-27D-38	4301351604	3	S	8	W	27		Oil Well	Location Abandoned
Myrin Fee 3-16D-55	4301351633	5	S	5	W	16		Oil Well	Location Abandoned
LC TRIBAL 12H-34-56	4301351634	5	S	6	W	34		Oil Well	Location Abandoned
UTE FEE 12-16D-55	4301351635	5	S	5	W	16		Oil Well	Location Abandoned
LC Tribal 13-11D-58	4301351708	5	S	8	W	11		Oil Well	Location Abandoned
LC Tribal 15-11D-58	4301351709	5	S	8	W	11		Oil Well	Location Abandoned
LC FEE 1-11D-56	4301351712	5	S	6	W	11		Oil Well	Location Abandoned
LC Tribal 8M-23-45	4301351722	4	S	5	W	23		Oil Well	Location Abandoned
LC Tribal 3-14D-58	4301351726	5	S	8	W	11		Oil Well	Location Abandoned
LC Tribal 11-11D-58	4301351729	5	S	8	W	11		Oil Well	Location Abandoned
LC TRIBAL 8-31D-56	4301351746	5	S	6	W	31		Oil Well	Location Abandoned
LC Fee 2-6D-57	4301351749	5	S	7	W	6		Oil Well	Location Abandoned
LC Tribal 15-12D-58	4301351783	5	S	8	W	12		Oil Well	Location Abandoned
LC Tribal 9-12D-58	4301351784	5	S	8	W	12		Oil Well	Location Abandoned
LC Tribal 1-13D-58	4301351785	5	S	8	W	12		Oil Well	Location Abandoned
LC Tribal 13-7D-57	4301351786	5	S	8	W	12		Oil Well	Location Abandoned
LC Tribal 9-2D-58	4301351788	5	S	8	W	2		Oil Well	Location Abandoned
LC Tribal 1-2D-58	4301351789	5	S	8	W	2		Oil Well	Location Abandoned
LC Tribal 5-1D-58	4301351790	5	S	8	W	2		Oil Well	Location Abandoned

From: Linn Operating, LLC
To: Berry Petroleum Company, LLC
Effective:May 1, 2017

LC Fee 15-6D-57	4301351816	5	S	7	W	6		Oil Well	Location Abandoned
LC Fee 7-31D-45	4301351857	4	S	5	W	31		Oil Well	Location Abandoned
LC Tribal 5-31D-45	4301351858	4	S	5	W	31		Oil Well	Location Abandoned
LC Tribal 16-31-45	4301351863	4	S	5	W	31		Oil Well	Location Abandoned
LC FEE 4-32D-45	4301351892	4	S	5	W	31		Oil Well	Location Abandoned
CC Fee 8R-9-37	4301351937	3	S	7	W	9		Oil Well	Location Abandoned
LC Tribal 13-26D-56	4301352099	5	S	6	W	26		Oil Well	Location Abandoned
LC Tribal 2-27D-45	4301352100	4	S	5	W	27		Oil Well	Location Abandoned
LC Tribal 8-27D-45	4301352101	4	S	5	W	27		Oil Well	Location Abandoned
Abbott Fee 1-6D-54	4301352324	5	S	4	W	6		Oil Well	Location Abandoned
Abbott Fee 7-6D-54	4301352327	5	S	4	W	6		Oil Well	Location Abandoned
UTE FEE 10-9D-54	4301352475	5	S	4	W	9		Oil Well	Location Abandoned
UTE FEE 12-9D-54	4301352476	5	S	4	W	9		Oil Well	Location Abandoned
UTE FEE 16-9D-54	4301352478	5	S	4	W	9		Oil Well	Location Abandoned
UTE FEE 11-9D-54	4301352544	5	S	4	W	9		Oil Well	Location Abandoned
UTE TRIBAL 6-5D-55	4301352556	5	S	5	W	5		Oil Well	Location Abandoned
UTE TRIBAL 5-5D-55	4301352557	5	S	5	W	5		Oil Well	Location Abandoned
UTE TRIBAL 4-5D-55	4301352558	5	S	5	W	5		Oil Well	Location Abandoned
UTE TRIBAL 3-5D-55	4301352559	5	S	5	W	5		Oil Well	Location Abandoned
UTE TRIBAL 10-30D-55	4301352736	5	S	5	W	30		Oil Well	Location Abandoned
UTE TRIBAL 8-5D-55	4301352773	5	S	5	W	5		Oil Well	Location Abandoned
UTE FEE 1-13D-55	4301352838	5	S	5	W	13		Oil Well	Location Abandoned
SCOFIELD-THORPE 26-31	4300730987	12	S	7	E	26		Dry Hole	Plugged & Abandoned
SCOFIELD-THORPE 26-43	4300730990	12	S	7	E	26		Dry Hole	Plugged & Abandoned
SCOFIELD CHRISTIANSEN 8-23	4300730999	12	S	7	E	8		Dry Hole	Plugged & Abandoned
NUTTERS RIDGE FED 5-1	4301330403	6	S	4	W	5	8231	Oil Well	Plugged & Abandoned
ANTELOPE RIDGE 24-1	4301330426	6	S	5	W	24		Dry Hole	Plugged & Abandoned
B C UTE TRIBAL 8-21	4301330829	5	S	4	W	21	8414	Water Injection Well	Plugged & Abandoned
LC TRIBAL 16-21-46	4301333575	4	S	6	W	21		Dry Hole	Plugged & Abandoned
LC TRIBAL 8-4-56	4301333605	5	S	6	W	4	17046	Oil Well	Plugged & Abandoned
FOY 9-33D-55	4301333802	5	S	5	W	33		Dry Hole	Plugged & Abandoned
CC FEE 7-28-38	4301350887	3	S	8	W	28		Dry Hole	Plugged & Abandoned
CC FEE 8-9-37	4301350896	3	S	7	W	9		Dry Hole	Plugged & Abandoned
LC TRIBAL 5HH-5-56	4301350927	5	S	6	W	4		Dry Hole	Plugged & Abandoned
LC TRIBAL 3-4D-56	4301351000	5	S	6	W	4		Dry Hole	Plugged & Abandoned
ST LOST CREEK 32-44	4304930023	11	S	7	E	32		Dry Hole	Plugged & Abandoned
BC UTE TRIBAL 4-22	4301330755	5	S	4	W	22	2620	Oil Well	Producing
B C UTE TRIBAL 16-16	4301330841	5	S	4	W	16	9489	Oil Well	Producing
B C UTE TRIBAL 14-15	4301330842	5	S	4	W	15	9440	Oil Well	Producing
UTE TRIBAL 1-32R	4301330872	5	S	4	W	32	13020	Oil Well	Producing
UTE TRIBAL 23-3R	4301330886	5	S	4	W	23	13034	Oil Well	Producing
UTE TRIBAL 13-3R-54	4301330924	5	S	4	W	3	9488	Oil Well	Producing
S COTTONWOOD RIDGE UTE TRIBAL 1-19	4301330933	5	S	4	W	19	9845	Oil Well	Producing
TABBY CYN UTE TRIBAL 1-25	4301330945	5	S	5	W	25	9722	Oil Well	Producing

From: Linn Operating, LLC
To: Berry Petroleum Company, LLC
Effective:May 1, 2017

S BRUNDAGE UTE TRIBAL 1-30	4301330948	5	S	4	W	30	9850	Oil Well	Producing
SOWERS CYN UTE TRIBAL 3-26	4301330955	5	S	5	W	26	10423	Oil Well	Producing
UTE TRIBAL 3-24R-55 (REENTRY)	4301330960	5	S	5	W	24	15173	Oil Well	Producing
UTE TRIBAL 1-20	4301330966	5	S	4	W	20	9925	Oil Well	Producing
T C UTE TRIBAL 9-23X	4301330999	5	S	5	W	23	9720	Oil Well	Producing
UTE TRIBAL 15-24R	4301331129	5	S	5	W	24	11985	Oil Well	Producing
S BRUNDAGE CYN UTE TRIBAL 4-27	4301331131	5	S	4	W	27	9851	Oil Well	Producing
UTE TRIBAL 5-13	4301331152	5	S	5	W	13	10421	Oil Well	Producing
UTE TRIBAL 7-20R-54	4301331281	5	S	4	W	20	14088	Oil Well	Producing
Z and T UTE TRIBAL 7-19	4301331282	5	S	4	W	19	11131	Oil Well	Producing
UTE TRIBAL 13-19	4301331284	5	S	4	W	19	11134	Oil Well	Producing
Z and T UTE TRIBAL 7-25	4301331310	5	S	5	W	25	11416	Oil Well	Producing
UTE TRIBAL 13-17	4301331546	5	S	4	W	17	11921	Oil Well	Producing
UTE TRIBAL 11-19	4301331547	5	S	4	W	19	11920	Oil Well	Producing
UTE TRIBAL 13-22	4301331548	5	S	4	W	22	11926	Oil Well	Producing
UTE TRIBAL 1-28	4301331549	5	S	4	W	28	11925	Oil Well	Producing
UTE TRIBAL 4-30	4301331550	5	S	4	W	30	11914	Oil Well	Producing
UTE TRIBAL 15-16	4301331648	5	S	4	W	16	11951	Oil Well	Producing
UTE TRIBAL 16-18	4301331650	5	S	4	W	18	11946	Oil Well	Producing
UTE TRIBAL 5-20	4301331651	5	S	4	W	20	11957	Oil Well	Producing
UTE TRIBAL 15-23	4301331671	5	S	5	W	23	11989	Oil Well	Producing
TABBY CANYON 1-21	4301331699	5	S	5	W	21	12225	Oil Well	Producing
TABBY CANYON 8-22	4301331700	5	S	5	W	22	12008	Oil Well	Producing
SOWERS CANYON 9-27	4301331701	5	S	5	W	27	11997	Oil Well	Producing
UTE TRIBAL 9-19	4301331831	5	S	4	W	19	12175	Oil Well	Producing
UTE TRIBAL 15-19	4301331832	5	S	4	W	19	12180	Oil Well	Producing
UTE TRIBAL 2-25	4301331833	5	S	5	W	25	12153	Oil Well	Producing
UTE TRIBAL 3-25	4301331834	5	S	5	W	25	12152	Oil Well	Producing
UTE TRIBAL 11-24	4301331909	5	S	5	W	24	12190	Oil Well	Producing
UTE TRIBAL 13-24	4301331910	5	S	5	W	24	12217	Oil Well	Producing
UTE TRIBAL 11-25	4301331911	5	S	5	W	25	12182	Oil Well	Producing
UTE TRIBAL 1-26	4301331912	5	S	5	W	26	12235	Oil Well	Producing
UTE TRIBAL 2-19	4301332140	5	S	4	W	19	12795	Oil Well	Producing
UTE TRIBAL 6-25H	4301332143	5	S	5	W	25	12750	Oil Well	Producing
UTE TRIBAL 9-18	4301332144	5	S	4	W	18	12746	Oil Well	Producing
UTE TRIBAL 11-17	4301332145	5	S	4	W	17	12747	Oil Well	Producing
UTE TRIBAL 12-17	4301332146	5	S	4	W	17	12745	Oil Well	Producing
UTE TRIBAL 15-18	4301332148	5	S	4	W	18	12794	Oil Well	Producing
UTE TRIBAL 6-22	4301332163	5	S	4	W	22	12974	Oil Well	Producing
UTE TRIBAL 6-21	4301332164	5	S	4	W	21	12994	Oil Well	Producing
UTE TRIBAL 7-28	4301332166	5	S	4	W	28	12995	Oil Well	Producing
UTE TRIBAL 11-20	4301332168	5	S	4	W	20	12946	Oil Well	Producing
UTE TRIBAL 13-25	4301332169	5	S	5	W	25	12857	Oil Well	Producing
UTE TRIBAL 2-27	4301332179	5	S	4	W	27	12975	Oil Well	Producing

From: Linn Operating, LLC
To: Berry Petroleum Company, LLC
Effective:May 1, 2017

UTE TRIBAL 1-34	4301332186	5	S	4	W	34	13121	Oil Well	Producing
UTE TRIBAL 2-35	4301332187	5	S	5	W	35	13021	Oil Well	Producing
UTE TRIBAL 4-36	4301332188	5	S	5	W	36	13063	Oil Well	Producing
UTE TRIBAL 5-28	4301332189	5	S	4	W	28	13026	Oil Well	Producing
UTE TRIBAL 5-31	4301332190	5	S	4	W	31	13080	Oil Well	Producing
UTE TRIBAL 9-26	4301332191	5	S	4	W	26	13101	Oil Well	Producing
UTE TRIBAL 11-28	4301332192	5	S	4	W	28	13022	Oil Well	Producing
UTE TRIBAL 3-29	4301332193	5	S	4	W	29	13042	Oil Well	Producing
UTE TRIBAL 5-19	4301332204	5	S	4	W	19	13090	Oil Well	Producing
UTE TRIBAL 12-15	4301332205	5	S	4	W	15	13100	Oil Well	Producing
UTE TRIBAL 13-20	4301332206	5	S	4	W	20	13048	Oil Well	Producing
UTE TRIBAL 1-24-55	4301332259	5	S	5	W	24	13618	Oil Well	Producing
UTE TRIBAL 3-28-54	4301332261	5	S	4	W	28	13644	Oil Well	Producing
UTE TRIBAL 5-26-55	4301332264	5	S	5	W	26	13642	Oil Well	Producing
UTE TRIBAL 6-36-55	4301332265	5	S	5	W	36	13600	Oil Well	Producing
UTE TRIBAL 8-35-55	4301332267	5	S	5	W	35	13571	Oil Well	Producing
UTE TRIBAL 9-24-55	4301332268	5	S	5	W	24	13620	Oil Well	Producing
UTE TRIBAL 11-23-55	4301332269	5	S	5	W	23	13572	Oil Well	Producing
UTE TRIBAL 15-25-55	4301332271	5	S	5	W	25	13566	Oil Well	Producing
UTE TRIBAL 16-14-55	4301332272	5	S	5	W	14	13567	Oil Well	Producing
UTE TRIBAL 15-27-55	4301332339	5	S	5	W	27	14020	Oil Well	Producing
UTE TRIBAL 5-15-55	4301332344	5	S	5	W	15	13606	Oil Well	Producing
UTE TRIBAL 7-20-55	4301332346	5	S	5	W	20	13607	Oil Well	Producing
MOON TRIBAL 12-23-54	4301332347	5	S	4	W	23	14008	Oil Well	Producing
UTE TRIBAL 14-28-55	4301332348	5	S	5	W	28	13580	Oil Well	Producing
UTE TRIBAL 16-29-55	4301332349	5	S	5	W	29	13581	Oil Well	Producing
UTE TRIBAL 2-32-55	4301332350	5	S	5	W	32	13695	Oil Well	Producing
FOY TRIBAL 11-34-55	4301332351	5	S	5	W	34	13648	Oil Well	Producing
UTE TRIBAL 16-35-55	4301332352	5	S	5	W	35	14267	Oil Well	Producing
UTE TRIBAL 10-35-55	4301332353	5	S	5	W	35	13645	Oil Well	Producing
UTE TRIBAL 12-36-55	4301332354	5	S	5	W	36	13643	Oil Well	Producing
UTE TRIBAL 14-36-55	4301332355	5	S	5	W	36	14262	Oil Well	Producing
UTE TRIBAL 16-36-55	4301332356	5	S	5	W	36	14122	Oil Well	Producing
UTE TRIBAL 4-33-55	4301332357	5	S	5	W	33	13685	Oil Well	Producing
UTE TRIBAL 15-17-55	4301332358	5	S	5	W	17	13698	Oil Well	Producing
UTE TRIBAL 12-14-54	4301332369	5	S	4	W	14	13647	Oil Well	Producing
UTE TRIBAL 3-20-54	4301332377	5	S	4	W	20	13955	Oil Well	Producing
UTE TRIBAL 4-21-54	4301332378	5	S	4	W	21	13907	Oil Well	Producing
UTE TRIBAL 9-20-54	4301332379	5	S	4	W	20	13906	Oil Well	Producing
UTE TRIBAL 5-30-54	4301332380	5	S	4	W	30	13905	Oil Well	Producing
UTE TRIBAL 9-30-54	4301332383	5	S	4	W	30	14050	Oil Well	Producing
UTE TRIBAL 12-21-54	4301332385	5	S	4	W	21	13928	Oil Well	Producing
UTE TRIBAL 15-20-54	4301332386	5	S	4	W	20	13911	Oil Well	Producing
UTE TRIBAL 13-28-54	4301332387	5	S	4	W	28	13908	Oil Well	Producing

From: Linn Operating, LLC
To: Berry Petroleum Company, LLC
Effective:May 1, 2017

UTE TRIBAL 9-28-54	4301332388	5	S	4	W	28	13910	Oil Well	Producing
UTE TRIBAL 15-28-54	4301332389	5	S	4	W	28	13909	Oil Well	Producing
UTE TRIBAL 9-25-55	4301332390	5	S	5	W	25	13715	Oil Well	Producing
MOON TRIBAL 6-27-54	4301332407	5	S	4	W	27	13969	Oil Well	Producing
MOON TRIBAL 14-27-54	4301332408	5	S	4	W	27	13998	Oil Well	Producing
UTE TRIBAL 3-32-54	4301332410	5	S	4	W	32	13949	Oil Well	Producing
UTE TRIBAL 7-32-54	4301332411	5	S	4	W	32	13936	Oil Well	Producing
UTE TRIBAL 7-33-54	4301332413	5	S	4	W	33	13945	Oil Well	Producing
UTE TRIBAL 11-20-55	4301332415	5	S	5	W	20	14269	Oil Well	Producing
UTE TRIBAL 1-27-55	4301332416	5	S	5	W	27	13947	Oil Well	Producing
UTE TRIBAL 3-27-55	4301332417	5	S	5	W	27	14022	Oil Well	Producing
UTE TRIBAL 7-27-55	4301332418	5	S	5	W	27	13948	Oil Well	Producing
UTE TRIBAL 10-28-55	4301332419	5	S	5	W	28	14580	Oil Well	Producing
UTE TRIBAL 6-32-55	4301332420	5	S	5	W	32	14895	Oil Well	Producing
UTE TRIBAL 8-32-55	4301332421	5	S	5	W	32	14896	Oil Well	Producing
UTE TRIBAL 2-36-55	4301332422	5	S	5	W	36	13937	Oil Well	Producing
UTE TRIBAL 8-36-55	4301332423	5	S	5	W	36	14021	Oil Well	Producing
UTE TRIBAL 13-16-54	4301332511	5	S	4	W	16	13981	Oil Well	Producing
UTE TRIBAL 11-30-54	4301332512	5	S	4	W	30	13982	Oil Well	Producing
UTE TRIBAL 13-23-55	4301332513	5	S	5	W	23	13975	Oil Well	Producing
UTE TRIBAL 7-23-55	4301332514	5	S	5	W	23	13976	Oil Well	Producing
UTE TRIBAL 5-33-54	4301332521	5	S	4	W	33	14060	Oil Well	Producing
UTE TRIBAL 11-33-54	4301332522	5	S	4	W	33	14061	Oil Well	Producing
UTE TRIBAL 14-32-54	4301332523	5	S	4	W	32	14062	Oil Well	Producing
UTE TRIBAL 1-23-55	4301332524	5	S	5	W	23	14044	Oil Well	Producing
UTE TRIBAL 5-29-54	4301332525	5	S	4	W	29	14045	Oil Well	Producing
UTE TRIBAL 1-31-54	4301332526	5	S	4	W	31	14116	Oil Well	Producing
UTE TRIBAL 3-31-54	4301332527	5	S	4	W	31	14109	Oil Well	Producing
UTE TRIBAL 7-31-54	4301332528	5	S	4	W	31	14160	Oil Well	Producing
UTE TRIBAL 9-31-54	4301332529	5	S	4	W	31	14177	Oil Well	Producing
UTE TRIBAL 11-31-54	4301332530	5	S	4	W	31	14163	Oil Well	Producing
UTE TRIBAL 3-23-55	4301332536	5	S	5	W	23	14077	Oil Well	Producing
UTE TRIBAL 5-23-55	4301332537	5	S	5	W	23	14108	Oil Well	Producing
UTE TRIBAL 9-32-54	4301332538	5	S	4	W	32	14199	Oil Well	Producing
UTE TRIBAL 5-32-54	4301332539	5	S	4	W	32	14112	Oil Well	Producing
MOON TRIBAL 10-27-54	4301332540	5	S	4	W	27	14195	Oil Well	Producing
MOON TRIBAL 12-27-54	4301332541	5	S	4	W	27	14161	Oil Well	Producing
MOON TRIBAL 8-27-54	4301332543	5	S	4	W	27	14139	Oil Well	Producing
UTE TRIBAL 9-33-54	4301332549	5	S	4	W	33	14162	Oil Well	Producing
WILLIAMSON TRIBAL 3-34-54	4301332550	5	S	4	W	34	14222	Oil Well	Producing
WILLIAMSON TRIBAL 5-34-54	4301332551	5	S	4	W	34	14235	Oil Well	Producing
FEDERAL 6-2-65	4301332557	6	S	5	W	2	14655	Oil Well	Producing
UTE TRIBAL 15-29-54	4301332561	5	S	4	W	29	14316	Oil Well	Producing
UTE TRIBAL 7-29-54	4301332562	5	S	4	W	29	14354	Oil Well	Producing

From: Linn Operating, LLC
To: Berry Petroleum Company, LLC
Effective:May 1, 2017

UTE TRIBAL 11-29-54	4301332563	5	S	4	W	29	14337	Oil Well	Producing
UTE TRIBAL 13-29-54	4301332564	5	S	4	W	29	14315	Oil Well	Producing
UTE TRIBAL 4-29-54	4301332565	5	S	4	W	29	14367	Oil Well	Producing
UTE TRIBAL 1-35-54	4301332567	5	S	4	W	35	14266	Oil Well	Producing
UTE TRIBAL 11-13-54	4301332568	5	S	4	W	13	14281	Oil Well	Producing
UTE TRIBAL 2-24-54	4301332569	5	S	4	W	24	14314	Oil Well	Producing
UTE TRIBAL 13-18-54	4301332571	5	S	4	W	18	14388	Oil Well	Producing
UTE TRIBAL 12-29-54	4301332572	5	S	4	W	29	14336	Oil Well	Producing
UTE TRIBAL 4-24-54	4301332573	5	S	4	W	24	14247	Oil Well	Producing
UTE TRIBAL 6-14-54	4301332586	5	S	4	W	14	15270	Oil Well	Producing
UTE TRIBAL 10-15-54	4301332587	5	S	4	W	15	14194	Oil Well	Producing
UTE TRIBAL 16-15-54	4301332588	5	S	4	W	15	14311	Oil Well	Producing
UTE TRIBAL 11-16-54	4301332589	5	S	4	W	16	14178	Oil Well	Producing
UTE TRIBAL 8-22-54	4301332590	5	S	4	W	22	14219	Oil Well	Producing
UTE TRIBAL 2-22-54	4301332591	5	S	4	W	22	14328	Oil Well	Producing
UTE TRIBAL 10-22-54	4301332592	5	S	4	W	22	14218	Oil Well	Producing
UTE TRIBAL 14-22-54	4301332593	5	S	4	W	22	14220	Oil Well	Producing
UTE TRIBAL 13-13-55	4301332599	5	S	5	W	13	15134	Oil Well	Producing
UTE TRIBAL 13-14-55	4301332600	5	S	5	W	14	14236	Oil Well	Producing
UTE TRIBAL 13-15-55	4301332602	5	S	5	W	15	14263	Oil Well	Producing
UTE TRIBAL 10-21-55	4301332603	5	S	5	W	21	14385	Oil Well	Producing
UTE TRIBAL 2-22-55	4301332604	5	S	5	W	22	14268	Oil Well	Producing
UTE TRIBAL 3-22-55	4301332605	5	S	5	W	22	14298	Oil Well	Producing
UTE TRIBAL 9-22-55	4301332606	5	S	5	W	22	14330	Oil Well	Producing
UTE TRIBAL 11-22-55	4301332607	5	S	5	W	22	14329	Oil Well	Producing
MOON TRIBAL 3-27-54	4301332613	5	S	4	W	27	14416	Oil Well	Producing
UTE TRIBAL 5-27-55	4301332614	5	S	5	W	27	14881	Oil Well	Producing
UTE TRIBAL 11-27-55	4301332615	5	S	5	W	27	14882	Oil Well	Producing
UTE TRIBAL 12-22-55	4301332616	5	S	5	W	22	14370	Oil Well	Producing
UTE TRIBAL 15-22-55	4301332617	5	S	5	W	22	14921	Oil Well	Producing
UTE TRIBAL 8-25-55	4301332620	5	S	5	W	25	14365	Oil Well	Producing
UTE TRIBAL 4-20-54	4301332621	5	S	4	W	20	14518	Oil Well	Producing
UTE TRIBAL 6-20-54	4301332622	5	S	4	W	20	14382	Oil Well	Producing
UTE TRIBAL 5-22-54	4301332624	5	S	4	W	22	14547	Oil Well	Producing
UTE TRIBAL 3-30-54	4301332625	5	S	4	W	30	14364	Oil Well	Producing
UTE TRIBAL 3-10-54	4301332663	5	S	4	W	10	14414	Oil Well	Producing
UTE TRIBAL 15-32-54	4301332666	5	S	4	W	32	14460	Oil Well	Producing
UTE TRIBAL 8-31-55	4301332673	5	S	5	W	31	14407	Oil Well	Producing
UTE TRIBAL 3-35-54	4301332675	5	S	4	W	35	14656	Oil Well	Producing
UTE TRIBAL 2-30-55	4301332680	5	S	5	W	30	14427	Oil Well	Producing
UTE TRIBAL 9-17-54	4301332687	5	S	4	W	17	15309	Oil Well	Producing
UTE TRIBAL 13-31-54	4301332688	5	S	4	W	31	14517	Oil Well	Producing
UTE TRIBAL 14-19-54	4301332690	5	S	4	W	19	14546	Oil Well	Producing
UTE TRIBAL 16-19-54	4301332691	5	S	4	W	19	14491	Oil Well	Producing

From: Linn Operating, LLC
To: Berry Petroleum Company, LLC
Effective:May 1, 2017

UTE TRIBAL 13-32-54	4301332692	5	S	4	W	32	14490	Oil Well	Producing
UTE TRIBAL 11-14-55	4301332693	5	S	5	W	14	15136	Oil Well	Producing
UTE TRIBAL 8-28-55	4301332694	5	S	5	W	28	14574	Oil Well	Producing
FEDERAL 6-1-65	4301332699	6	S	5	W	1	15776	Oil Well	Producing
UTE TRIBAL 9-15-55	4301332701	5	S	5	W	15	14573	Oil Well	Producing
UTE TRIBAL 14-20-54	4301332702	5	S	4	W	20	14459	Oil Well	Producing
#1 DLB 12-15-56	4301332710	5	S	6	W	15	14943	Gas Well	Producing
UTE TRIBAL 12-19-54	4301332716	5	S	4	W	19	14627	Oil Well	Producing
UTE TRIBAL 10-19-54	4301332717	5	S	4	W	19	14628	Oil Well	Producing
UTE TRIBAL 16-30-54	4301332718	5	S	4	W	30	14604	Oil Well	Producing
UTE TRIBAL 11-12-55	4301332721	5	S	5	W	12	14605	Oil Well	Producing
NIELSEN MARSING 13-14-56	4301332737	5	S	6	W	14	15060	Oil Well	Producing
TAYLOR HERRICK 10-22-56	4301332738	5	S	6	W	22	15058	Oil Well	Producing
UTE TRIBAL 16-20-54	4301332739	5	S	4	W	20	14671	Oil Well	Producing
UTE TRIBAL 10-20-54	4301332740	5	S	4	W	20	14691	Oil Well	Producing
UTE TRIBAL 4-28-54	4301332741	5	S	4	W	28	14672	Oil Well	Producing
UTE TRIBAL 13-33-54	4301332742	5	S	4	W	33	14736	Oil Well	Producing
UTE TRIBAL 15-31-54	4301332743	5	S	4	W	31	14690	Oil Well	Producing
UTE TRIBAL 8-30-54	4301332746	5	S	4	W	30	15583	Oil Well	Producing
UTE TRIBAL 10-25-55	4301332749	5	S	5	W	25	14758	Oil Well	Producing
UTE TRIBAL 14-25-55	4301332750	5	S	5	W	25	14798	Oil Well	Producing
UTE TRIBAL 3-36-55	4301332751	5	S	5	W	36	14842	Oil Well	Producing
UTE TRIBAL 16-16-55	4301332757	5	S	5	W	16	14865	Oil Well	Producing
UTE TRIBAL 3-21-55	4301332758	5	S	5	W	21	15112	Oil Well	Producing
UTE TRIBAL 16-25-55	4301332759	5	S	5	W	25	14821	Oil Well	Producing
UTE TRIBAL 1-36-55	4301332760	5	S	5	W	36	14822	Oil Well	Producing
UTE TRIBAL 7-22-54	4301332761	5	S	4	W	22	15661	Oil Well	Producing
UTE TRIBAL 2-31-54	4301332762	5	S	4	W	31	14845	Oil Well	Producing
UTE TRIBAL 2-28-54	4301332763	5	S	4	W	28	14723	Oil Well	Producing
UTE TRIBAL 10-28-54	4301332764	5	S	4	W	28	14722	Oil Well	Producing
UTE TRIBAL 12-28-54	4301332765	5	S	4	W	28	14701	Oil Well	Producing
UTE TRIBAL 8-28-54	4301332766	5	S	4	W	28	14777	Oil Well	Producing
UTE TRIBAL 4-31-54	4301332767	5	S	4	W	31	14494	Oil Well	Producing
UTE TRIBAL 15-33-54	4301332768	5	S	4	W	33	15210	Oil Well	Producing
UTE TRIBAL 12-25-55	4301332769	5	S	5	W	25	14799	Oil Well	Producing
UTE TRIBAL 7-35-54	4301332774	5	S	4	W	35	15019	Oil Well	Producing
UTE TRIBAL 16-24-54	4301332775	5	S	4	W	24	14762	Oil Well	Producing
UTE TRIBAL 14-25-54	4301332776	5	S	4	W	25	14753	Oil Well	Producing
UTE TRIBAL 16-25-54	4301332779	5	S	4	W	25	15078	Oil Well	Producing
UTE TRIBAL 8-25-54	4301332780	5	S	4	W	25	15280	Oil Well	Producing
UTE TRIBAL 9-35-54	4301332781	5	S	4	W	35	15535	Oil Well	Producing
UTE TRIBAL 6-30-55	4301332783	5	S	5	W	30	15163	Oil Well	Producing
MOON TRIBAL 4-23-54	4301332800	5	S	4	W	23	14985	Oil Well	Producing
MOON TRIBAL 5-27-54	4301332802	5	S	4	W	27	14984	Oil Well	Producing

From: Linn Operating, LLC
To: Berry Petroleum Company, LLC
Effective:May 1, 2017

UTE TRIBAL 2-32-54	4301332803	5	S	4	W	32	15151	Oil Well	Producing
UTE TRIBAL 15-35-54	4301332804	5	S	4	W	35	15185	Oil Well	Producing
UTE TRIBAL 5-35-54	4301332805	5	S	4	W	35	15485	Oil Well	Producing
UTE TRIBAL 13-35-54	4301332806	5	S	4	W	35	15292	Oil Well	Producing
UTE TRIBAL 11-35-54	4301332807	5	S	4	W	35	15317	Oil Well	Producing
UTE TRIBAL 8-19-54	4301332840	5	S	4	W	19	14946	Oil Well	Producing
UTE TRIBAL 13-20-55	4301332841	5	S	5	W	20	15097	Oil Well	Producing
UTE TRIBAL 16-22-54	4301332842	5	S	4	W	22	15015	Oil Well	Producing
MOON TRIBAL 6-23-54	4301332843	5	S	4	W	23	15113	Oil Well	Producing
UTE TRIBAL 11-26-54	4301332844	5	S	4	W	26	15233	Oil Well	Producing
MOON TRIBAL 15-27-54	4301332846	5	S	4	W	27	15115	Oil Well	Producing
UTE TRIBAL 10-31-54	4301332847	5	S	4	W	31	14956	Oil Well	Producing
ST TRIBAL 6-15-54	4301332848	5	S	4	W	15	16656	Oil Well	Producing
ST TRIBAL 2-15-54	4301332849	5	S	4	W	15	16959	Oil Well	Producing
ST TRIBAL 4-15-54	4301332850	5	S	4	W	15	17478	Oil Well	Producing
ST TRIBAL 8-15-54	4301332851	5	S	4	W	15	16279	Oil Well	Producing
UTE TRIBAL 11-25-54	4301332856	5	S	4	W	25	15430	Oil Well	Producing
UTE TRIBAL 3-30-55	4301332862	5	S	5	W	30	15340	Oil Well	Producing
UTE TRIBAL 7-19-55	4301332863	5	S	5	W	19	15279	Oil Well	Producing
UTE TRIBAL 8-19-55	4301332864	5	S	5	W	19	15241	Oil Well	Producing
UTE TRIBAL 6-19-54	4301332865	5	S	4	W	19	14947	Oil Well	Producing
UTE TRIBAL 12-20-54	4301332866	5	S	4	W	20	14924	Oil Well	Producing
UTE TRIBAL 3-21-54	4301332867	5	S	4	W	21	15554	Oil Well	Producing
UTE TRIBAL 2-26-54	4301332868	5	S	4	W	26	15231	Oil Well	Producing
UTE TRIBAL 8-31-54	4301332869	5	S	4	W	31	14970	Oil Well	Producing
UTE TRIBAL 8-32-54	4301332870	5	S	4	W	32	15152	Oil Well	Producing
UTE TRIBAL 4-33-54	4301332871	5	S	4	W	33	15040	Oil Well	Producing
UTE TRIBAL 6-33-54	4301332872	5	S	4	W	33	15059	Oil Well	Producing
UTE TRIBAL 9-22-54	4301332889	5	S	4	W	22	15607	Oil Well	Producing
UTE TRIBAL 5-26-54	4301332890	5	S	4	W	26	15268	Oil Well	Producing
UTE TRIBAL 13-26-54	4301332891	5	S	4	W	26	15287	Oil Well	Producing
UTE TRIBAL 6-28D-54	4301332892	5	S	4	W	28	15232	Oil Well	Producing
UTE TRIBAL 2-30D-54	4301332894	5	S	4	W	30	15298	Oil Well	Producing
UTE TRIBAL 4-32-54	4301332896	5	S	4	W	32	15555	Oil Well	Producing
UTE TRIBAL 6-32D-54	4301332897	5	S	4	W	32	15312	Oil Well	Producing
UTE TRIBAL 2-33D-54	4301332898	5	S	4	W	33	15271	Oil Well	Producing
UTE TRIBAL 12-32-54	4301332925	5	S	4	W	32	15503	Oil Well	Producing
UTE TRIBAL 16-32D-54	4301332926	5	S	4	W	32	16971	Oil Well	Producing
MOON TRIBAL 16-23-54	4301332927	5	S	4	W	23	15219	Oil Well	Producing
UTE TRIBAL 4-25-55	4301332928	5	S	5	W	25	15421	Oil Well	Producing
UTE TRIBAL 7-36-55	4301332929	5	S	5	W	36	15341	Oil Well	Producing
UTE TRIBAL 5-36-55	4301332930	5	S	5	W	36	15301	Oil Well	Producing
MOON TRIBAL 10-2-54	4301332931	5	S	4	W	2	15429	Oil Well	Producing
MYRIN TRIBAL 16-19-55	4301332934	5	S	5	W	19	15339	Oil Well	Producing

From: Linn Operating, LLC
To: Berry Petroleum Company, LLC
Effective:May 1, 2017

UTE TRIBAL 2-31-55	4301332935	5	S	5	W	31	15428	Oil Well	Producing
UTE TRIBAL 10-31-55	4301332936	5	S	5	W	31	15354	Oil Well	Producing
MOON TRIBAL 1-27-54	4301332937	5	S	4	W	27	15308	Oil Well	Producing
MOON TRIBAL 5-23-54	4301332938	5	S	4	W	23	15584	Oil Well	Producing
ST TRIBAL 7-18-54	4301332952	5	S	4	W	18	15724	Oil Well	Producing
ST TRIBAL 5-18-54	4301332953	5	S	4	W	18	15781	Oil Well	Producing
UTE TRIBAL 15-15-54	4301332971	5	S	4	W	15	15310	Oil Well	Producing
UTE TRIBAL 4-19-54	4301332972	5	S	4	W	19	15382	Oil Well	Producing
UTE TRIBAL 8-20-54	4301332973	5	S	4	W	20	15245	Oil Well	Producing
UTE TRIBAL 2-20-54	4301332974	5	S	4	W	20	15269	Oil Well	Producing
UTE TRIBAL 7-15-55	4301332976	5	S	5	W	15	15311	Oil Well	Producing
UTE TRIBAL 10-15-55	4301332977	5	S	5	W	15	15380	Oil Well	Producing
UTE TRIBAL 1-15-55	4301332978	5	S	5	W	15	15299	Oil Well	Producing
UTE TRIBAL 14-15-55	4301332979	5	S	5	W	15	15369	Oil Well	Producing
UTE TRIBAL 11-15-55	4301332980	5	S	5	W	15	15342	Oil Well	Producing
UTE TRIBAL 14-18-55	4301332984	5	S	5	W	18	15671	Oil Well	Producing
UTE TRIBAL 14-24-56	4301332988	5	S	6	W	24	15740	Oil Well	Producing
UTE TRIBAL 7-24-56	4301332989	5	S	6	W	24	15782	Oil Well	Producing
UTE TRIBAL 11-25-56	4301332990	5	S	6	W	25	15627	Oil Well	Producing
UTE TRIBAL 7-25-56	4301332991	5	S	6	W	25	15617	Oil Well	Producing
UTE TRIBAL 5-25-56	4301332992	5	S	6	W	25	15648	Oil Well	Producing
UTE TRIBAL 3-25-56	4301332993	5	S	6	W	25	15561	Oil Well	Producing
UTE TRIBAL 13-15D-54	4301333039	5	S	4	W	15	15368	Oil Well	Producing
UTE TRIBAL 16-28D-54	4301333041	5	S	4	W	28	15377	Oil Well	Producing
UTE TRIBAL 14-31D-54	4301333042	5	S	4	W	31	15419	Oil Well	Producing
UTE TRIBAL 4-22-55	4301333044	5	S	5	W	22	15381	Oil Well	Producing
UTE TRIBAL 16-23-55	4301333046	5	S	5	W	23	15211	Oil Well	Producing
UTE TRIBAL 9-35-55	4301333047	5	S	5	W	35	15378	Oil Well	Producing
UTE TRIBAL 7-35-55	4301333048	5	S	5	W	35	15367	Oil Well	Producing
UTE TRIBAL 15-36-55	4301333049	5	S	5	W	36	15379	Oil Well	Producing
UTE TRIBAL 10-12-55	4301333055	5	S	5	W	12	15618	Oil Well	Producing
UTE TRIBAL 5-13-54	4301333075	5	S	4	W	13	15873	Oil Well	Producing
UTE TRIBAL 16-29-54	4301333076	5	S	4	W	29	17074	Oil Well	Producing
UTE TRIBAL 12-18-54	4301333077	5	S	4	W	18	15575	Oil Well	Producing
UTE TRIBAL 8-33-54	4301333089	5	S	4	W	33	15398	Oil Well	Producing
UTE TRIBAL 12-33-54	4301333090	5	S	4	W	33	15417	Oil Well	Producing
UTE TRIBAL 16-33-54	4301333091	5	S	4	W	33	15397	Oil Well	Producing
UTE TRIBAL 10-33-54	4301333092	5	S	4	W	33	15418	Oil Well	Producing
UTE TRIBAL 14-33-54	4301333093	5	S	4	W	33	15399	Oil Well	Producing
UTE TRIBAL 2-14-54	4301333111	5	S	4	W	14	16832	Oil Well	Producing
UTE TRIBAL 14-14-54	4301333112	5	S	4	W	14	15440	Oil Well	Producing
UTE TRIBAL 13-21-54	4301333113	5	S	4	W	21	15471	Oil Well	Producing
UTE TRIBAL 11-21-54	4301333115	5	S	4	W	21	15470	Oil Well	Producing
UTE TRIBAL 11-22-54	4301333116	5	S	4	W	22	15662	Oil Well	Producing

From: Linn Operating, LLC
To: Berry Petroleum Company, LLC
Effective:May 1, 2017

UTE TRIBAL 2-21-55	4301333117	5	S	5	W	21	15582	Oil Well	Producing
UTE TRIBAL 4-28-55	4301333118	5	S	5	W	28	15506	Oil Well	Producing
UTE TRIBAL 8-29-55	4301333119	5	S	5	W	29	15507	Oil Well	Producing
UTE TRIBAL 6-29-55	4301333120	5	S	5	W	29	15504	Oil Well	Producing
TAYLOR FEE 13-22-56	4301333121	5	S	6	W	22	15525	Oil Well	Producing
WILCOX ELIASON 7-15-56	4301333122	5	S	6	W	15	15526	Oil Well	Producing
UTE TRIBAL 14-16-54	4301333123	5	S	4	W	16	15639	Oil Well	Producing
UTE TRIBAL 1-16-54	4301333128	5	S	4	W	16	15420	Oil Well	Producing
UTE TRIBAL 10-16-54	4301333129	5	S	4	W	16	15454	Oil Well	Producing
UTE TRIBAL 7-16-54	4301333130	5	S	4	W	16	15455	Oil Well	Producing
UTE TRIBAL 12-16-54	4301333131	5	S	4	W	16	15456	Oil Well	Producing
UTE TRIBAL 16-17-54	4301333132	5	S	4	W	17	15524	Oil Well	Producing
UTE TRIBAL 10-17-54	4301333133	5	S	4	W	17	15581	Oil Well	Producing
UTE TRIBAL 12-24D-55	4301333134	5	S	5	W	24	15567	Oil Well	Producing
WILCOX FEE 1-20-56	4301333150	5	S	6	W	20	15745	Oil Well	Producing
NIELSEN FEE 13-11-56	4301333152	5	S	6	W	11	15600	Oil Well	Producing
UTE TRIBAL 2-29-54	4301333153	5	S	4	W	29	15919	Oil Well	Producing
UTE TRIBAL 14-29-54	4301333154	5	S	4	W	29	15831	Oil Well	Producing
UTE TRIBAL 10-29-54	4301333155	5	S	4	W	29	15847	Oil Well	Producing
UTE TRIBAL 10-24D-55	4301333156	5	S	5	W	24	15556	Oil Well	Producing
UTE TRIBAL 10-29D-55	4301333157	5	S	5	W	29	15505	Oil Well	Producing
UTE TRIBAL 6-29-54	4301333172	5	S	4	W	29	15846	Oil Well	Producing
UTE TRIBAL 12Q-25-55	4301333184	5	S	5	W	25	15744	Oil Well	Producing
UTE TRIBAL 3G-31-54	4301333185	5	S	4	W	31	15746	Oil Well	Producing
UTE TRIBAL 1I-36-55	4301333186	5	S	5	W	36	15865	Oil Well	Producing
UTE TRIBAL 6-23D-55	4301333187	5	S	5	W	23	15996	Oil Well	Producing
UTE TRIBAL 8-14-54	4301333204	5	S	4	W	14	15656	Oil Well	Producing
UTE TRIBAL 10-14-54	4301333205	5	S	4	W	14	15680	Oil Well	Producing
UTE TRIBAL 11-15-54	4301333206	5	S	4	W	15	15643	Oil Well	Producing
UTE TRIBAL 9-16-54	4301333207	5	S	4	W	16	15660	Oil Well	Producing
UTE TRIBAL 3-22-54	4301333208	5	S	4	W	22	15640	Oil Well	Producing
UTE TRIBAL 15-13D-55	4301333212	5	S	5	W	13	15642	Oil Well	Producing
UTE TRIBAL 6-22D-55	4301333213	5	S	5	W	22	16831	Oil Well	Producing
UTE TRIBAL 11-36D-55	4301333214	5	S	5	W	36	15702	Oil Well	Producing
UTE TRIBAL 1-22D-54	4301333215	5	S	4	W	22	15641	Oil Well	Producing
BERRY TRIBAL 1-23-54	4301333216	5	S	4	W	23	15931	Oil Well	Producing
BERRY TRIBAL 15-23-54	4301333217	5	S	4	W	23	15932	Oil Well	Producing
UTE TRIBAL 9-36D-55	4301333239	5	S	5	W	36	15933	Oil Well	Producing
UTE TRIBAL 9S-25-55	4301333245	5	S	5	W	25	15962	Oil Well	Producing
UTE TRIBAL 12-32-55	4301333266	5	S	5	W	32	15681	Oil Well	Producing
UTE TRIBAL 16-22D-55	4301333267	5	S	5	W	22	15703	Oil Well	Producing
UTE TRIBAL 4-14D-54	4301333270	5	S	4	W	14	15679	Oil Well	Producing
UTE TRIBAL 9S-19-54	4301333276	5	S	4	W	19	16153	Oil Well	Producing
UTE TRIBAL 14Q-28-54	4301333277	5	S	4	W	28	15818	Oil Well	Producing

From: Linn Operating, LLC
To: Berry Petroleum Company, LLC
Effective:May 1, 2017

UTE TRIBAL 14-28D-54	4301333278	5	S	4	W	28	15817	Oil Well	Producing
UTE TRIBAL 1-14D-55	4301333279	5	S	5	W	14	18408	Oil Well	Producing
UTE TRIBAL 10-18-54	4301333300	5	S	4	W	18	15747	Oil Well	Producing
UTE TRIBAL 5-21-54	4301333324	5	S	4	W	21	15748	Oil Well	Producing
UTE TRIBAL 6-31D-54	4301333325	5	S	4	W	31	16185	Oil Well	Producing
UTE TRIBAL 16-31D-54	4301333326	5	S	4	W	31	15800	Oil Well	Producing
UTE TRIBAL 16-13D-55	4301333327	5	S	5	W	13	15891	Oil Well	Producing
UTE TRIBAL 9-13D-55	4301333328	5	S	5	W	13	15892	Oil Well	Producing
UTE TRIBAL 15-21-55	4301333357	5	S	5	W	21	15791	Oil Well	Producing
UTE TRIBAL 10-23D-55	4301333358	5	S	5	W	23	15799	Oil Well	Producing
UTE TRIBAL 9-26D-55	4301333359	5	S	5	W	26	15853	Oil Well	Producing
UTE TRIBAL 10-26D-55	4301333360	5	S	5	W	26	15852	Oil Well	Producing
UTE TRIBAL 14-26D-55	4301333361	5	S	5	W	26	15938	Oil Well	Producing
UTE TRIBAL 15-26D-55	4301333362	5	S	5	W	26	15869	Oil Well	Producing
UTE TRIBAL 3-32D-55	4301333363	5	S	5	W	32	15936	Oil Well	Producing
UTE TRIBAL 13-14-54	4301333364	5	S	4	W	14	15790	Oil Well	Producing
MOON TRIBAL 7-27D-54	4301333365	5	S	4	W	27	15935	Oil Well	Producing
UTE TRIBAL 4-32-55	4301333379	5	S	5	W	32	15819	Oil Well	Producing
UTE TRIBAL 13H-16-55	4301333380	5	S	5	W	16	18357	Oil Well	Producing
BERRY TRIBAL 7-23-54	4301333381	5	S	4	W	23	15934	Oil Well	Producing
BERRY TRIBAL 9-34-54	4301333382	5	S	4	W	34	16024	Oil Well	Producing
BERRY TRIBAL 7-34-54	4301333383	5	S	4	W	34	16102	Oil Well	Producing
BERRY TRIBAL 4-34-54	4301333384	5	S	4	W	34	16588	Oil Well	Producing
FEDERAL 2-2-65	4301333385	6	S	5	W	2	16150	Oil Well	Producing
FEDERAL 5-4-65	4301333387	6	S	5	W	4	17599	Oil Well	Producing
UTE TRIBAL 1A-29-54	4301333393	5	S	4	W	29	17075	Oil Well	Producing
BERRY TRIBAL 15-34-54	4301333411	5	S	4	W	34	16037	Oil Well	Producing
BERRY TRIBAL 8-23D-54	4301333417	5	S	4	W	23	16101	Oil Well	Producing
UTE TRIBAL 12-29D-55	4301333418	5	S	5	W	29	17307	Oil Well	Producing
UTE TRIBAL 8-24-55	4301333420	5	S	5	W	24	15997	Oil Well	Producing
UTE TRIBAL 5-25D-55	4301333421	5	S	5	W	25	16589	Oil Well	Producing
BERRY TRIBAL 10-34D-54	4301333422	5	S	4	W	34	16038	Oil Well	Producing
1-15-56 DLB	4301333447	5	S	6	W	15	15854	Oil Well	Producing
FEDERAL 5-3-64	4301333448	6	S	4	W	3	16098	Oil Well	Producing
FEDERAL 8-1-64	4301333449	6	S	4	W	1	16152	Oil Well	Producing
FEDERAL 5-4-64	4301333450	6	S	4	W	4	17851	Oil Well	Producing
FEDERAL 11-10-65	4301333451	6	S	5	W	10	16281	Oil Well	Producing
BERRY TRIBAL 9-23-54	4301333465	5	S	4	W	23	16590	Oil Well	Producing
UTE TRIBAL 6-26D-55	4301333476	5	S	5	W	26	16657	Oil Well	Producing
UTE TRIBAL 7-26D-55	4301333477	5	S	5	W	26	16658	Oil Well	Producing
UTE TRIBAL 11-26D-55	4301333478	5	S	5	W	26	16659	Oil Well	Producing
UTE TRIBAL 14Q-30-54	4301333479	5	S	4	W	30	16151	Oil Well	Producing
FEDERAL 5-6-65	4301333489	6	S	5	W	6	17852	Oil Well	Producing
FEDERAL 16-5-65	4301333490	6	S	5	W	5	16833	Oil Well	Producing

From: Linn Operating, LLC
To: Berry Petroleum Company, LLC
Effective:May 1, 2017

FEDERAL 6-11-65	4301333491	6	S	5	W	11	16335	Oil Well	Producing
LC TRIBAL 14-2-56	4301333492	5	S	6	W	2	18358	Oil Well	Producing
UTE TRIBAL 1-31-55	4301333501	5	S	5	W	31	17104	Oil Well	Producing
UTE TRIBAL 9-31-55	4301333508	5	S	5	W	31	17103	Oil Well	Producing
BERRY TRIBAL 11-34D-54	4301333529	5	S	4	W	34	16099	Oil Well	Producing
LC TRIBAL 2-16D-56	4301333538	5	S	6	W	16	17305	Oil Well	Producing
LC TRIBAL 4-16-56	4301333539	5	S	6	W	16	16272	Oil Well	Producing
LC TRIBAL 3-17-56	4301333541	5	S	6	W	17	16459	Oil Well	Producing
UTE TRIBAL 4-20D-55	4301333549	5	S	5	W	20	18075	Oil Well	Producing
UTE TRIBAL 8-23D-55	4301333552	5	S	5	W	23	16662	Oil Well	Producing
LC TRIBAL 8-28-46	4301333576	4	S	6	W	28	16155	Oil Well	Producing
LC TRIBAL 7-3-56	4301333577	5	S	6	W	3	16379	Oil Well	Producing
LC TRIBAL 3-5-56	4301333580	5	S	6	W	5	17082	Oil Well	Producing
FEDERAL 8-2D-64	4301333581	6	S	4	W	2	16100	Oil Well	Producing
LC TRIBAL 13H-3-56	4301333591	5	S	6	W	3	18129	Oil Well	Producing
LC FEE 6-12-57	4301333593	5	S	7	W	12	17083	Oil Well	Producing
UTE TRIBAL 4-26D-54	4301333595	5	S	4	W	26	16591	Oil Well	Producing
LC FEE 12H-6-56	4301333606	5	S	6	W	6	18037	Oil Well	Producing
LC TRIBAL 7-7D-56	4301333607	5	S	6	W	7	18038	Oil Well	Producing
LC TRIBAL 1-9-56	4301333608	5	S	6	W	9	16380	Oil Well	Producing
UTE TRIBAL 5-14-54	4301333619	5	S	4	W	14	16945	Oil Well	Producing
UTE TRIBAL 10-26D-54	4301333620	5	S	4	W	26	16663	Oil Well	Producing
UTE TRIBAL 7-26D-54	4301333621	5	S	4	W	26	16664	Oil Well	Producing
UTE TRIBAL 13-36D-55	4301333624	5	S	5	W	36	17744	Oil Well	Producing
UTE TRIBAL 6-26D-54	4301333625	5	S	4	W	26	16619	Oil Well	Producing
UTE TRIBAL 1-22D-55	4301333626	5	S	5	W	22	16777	Oil Well	Producing
UTE TRIBAL 4-23D-55	4301333627	5	S	5	W	23	16818	Oil Well	Producing
UTE TRIBAL 2-27D-55	4301333628	5	S	5	W	27	16746	Oil Well	Producing
UTE TRIBAL 12-28D-55	4301333645	5	S	5	W	28	17999	Oil Well	Producing
UTE TRIBAL 13-28D-55	4301333646	5	S	5	W	28	18000	Oil Well	Producing
UTE TRIBAL 14-26D-54	4301333673	5	S	4	W	26	16299	Oil Well	Producing
UTE FEE 7-13D-55	4301333674	5	S	5	W	13	18089	Oil Well	Producing
UTE TRIBAL 9-20D-55	4301333675	5	S	5	W	20	17309	Oil Well	Producing
LC TRIBAL 11-17-56	4301333677	5	S	6	W	17	17600	Oil Well	Producing
UTE TRIBAL 1-26D-54	4301333680	5	S	4	W	26	16638	Oil Well	Producing
UTE TRIBAL 3-26D-54	4301333681	5	S	4	W	26	16665	Oil Well	Producing
UTE TRIBAL 8-26D-54	4301333682	5	S	4	W	26	17031	Oil Well	Producing
UTE TRIBAL 10-27D-55	4301333683	5	S	5	W	27	16666	Oil Well	Producing
UTE TRIBAL 14-27D-55	4301333684	5	S	5	W	27	16667	Oil Well	Producing
UTE TRIBAL 12-21D-55	4301333694	5	S	5	W	21	16296	Oil Well	Producing
UTE TRIBAL 5-21D-55	4301333706	5	S	5	W	21	16298	Oil Well	Producing
UTE TRIBAL 2-29D-55	4301333714	5	S	5	W	29	16854	Oil Well	Producing
UTE TRIBAL 7-29D-55	4301333715	5	S	5	W	29	16853	Oil Well	Producing
UTE TRIBAL 13-22D-55	4301333716	5	S	5	W	22	16668	Oil Well	Producing

From: Linn Operating, LLC
To: Berry Petroleum Company, LLC
Effective:May 1, 2017

UTE TRIBAL 14-22D-55	4301333717	5	S	5	W	22	16669	Oil Well	Producing
UTE TRIBAL 7-22D-55	4301333721	5	S	5	W	22	16670	Oil Well	Producing
UTE TRIBAL 10-22D-55	4301333722	5	S	5	W	22	16671	Oil Well	Producing
UTE TRIBAL 3-29-55	4301333723	5	S	5	W	29	16857	Oil Well	Producing
BERRY TRIBAL 10-23D-54	4301333724	5	S	4	W	23	16592	Oil Well	Producing
BERRY TRIBAL 11-23D-54	4301333725	5	S	4	W	23	16672	Oil Well	Producing
UTE TRIBAL 4-24D-55	4301333726	5	S	5	W	24	16673	Oil Well	Producing
FEDERAL 6-6D-64	4301333745	6	S	4	W	6	17084	Oil Well	Producing
UTE TRIBAL 15-26D-54	4301333768	5	S	4	W	26	17450	Oil Well	Producing
UTE TRIBAL 1-14D-54	4301333769	5	S	4	W	14	17483	Oil Well	Producing
UTE TRIBAL 12-35D-55	4301333782	5	S	5	W	35	16856	Oil Well	Producing
UTE TRIBAL 11-35-55	4301333783	5	S	5	W	35	16855	Oil Well	Producing
UTE TRIBAL 1-28D-55	4301333784	5	S	5	W	28	16852	Oil Well	Producing
UTE TRIBAL 16-27D-55	4301333786	5	S	5	W	27	17800	Oil Well	Producing
UTE TRIBAL 9-28D-55	4301333787	5	S	5	W	28	16887	Oil Well	Producing
UTE TRIBAL 7-28D-55	4301333788	5	S	5	W	28	16886	Oil Well	Producing
UTE TRIBAL 11-32D-54	4301333793	5	S	4	W	32	17003	Oil Well	Producing
UTE TRIBAL 9-14D-54	4301333796	5	S	4	W	14	17482	Oil Well	Producing
UTE TRIBAL 4-27D-55	4301333797	5	S	5	W	27	16700	Oil Well	Producing
FOY TRIBAL 12H-33-55	4301333799	5	S	5	W	33	18232	Oil Well	Producing
UTE TRIBAL 9-32D-55	4301333800	5	S	5	W	32	18361	Oil Well	Producing
UTE TRIBAL 12-26D-54	4301333801	5	S	4	W	26	16639	Oil Well	Producing
UTE TRIBAL 8-26D-55	4301333859	5	S	5	W	26	17859	Oil Well	Producing
BERRY TRIBAL 2-34D-54	4301333867	5	S	4	W	34	17889	Oil Well	Producing
UTE TRIBAL 3-35D-55	4301333888	5	S	5	W	35	17421	Oil Well	Producing
UTE TRIBAL 10-32-54	4301333902	5	S	4	W	32	16819	Oil Well	Producing
UTE TRIBAL 12-31D-54	4301333907	5	S	4	W	31	17480	Oil Well	Producing
UTE TRIBAL 12-23D-55	4301333908	5	S	5	W	23	17814	Oil Well	Producing
UTE TRIBAL 14-20D-55	4301333909	5	S	5	W	20	18559	Oil Well	Producing
UTE TRIBAL 6-20D-55	4301333910	5	S	5	W	20	18481	Oil Well	Producing
UTE TRIBAL 12-20-55	4301333911	5	S	5	W	20	18520	Oil Well	Producing
UTE TRIBAL 14-24D-55	4301333912	5	S	5	W	24	16943	Oil Well	Producing
UTE TRIBAL 14-23D-55	4301333915	5	S	5	W	23	17457	Oil Well	Producing
ST TRIBAL 1-15D-54	4301333916	5	S	4	W	15	16889	Oil Well	Producing
ST TRIBAL 7-15D-54	4301333950	5	S	4	W	15	16972	Oil Well	Producing
ST TRIBAL 9-15D-54	4301333951	5	S	4	W	15	16973	Oil Well	Producing
UTE TRIBAL 15-35D-55	4301333954	5	S	5	W	35	17417	Oil Well	Producing
UTE TRIBAL 14-35D-55	4301333955	5	S	5	W	35	17416	Oil Well	Producing
UTE TRIBAL 16-26D-55	4301333965	5	S	5	W	26	17418	Oil Well	Producing
FEDERAL 1-2D-65	4301333966	6	S	5	W	2	16888	Oil Well	Producing
UTE TRIBAL 1-35D-55	4301333967	5	S	5	W	35	17420	Oil Well	Producing
UTE TRIBAL 10-36D-55	4301333968	5	S	5	W	36	17743	Oil Well	Producing
UTE TRIBAL 4-26D-55	4301333978	5	S	5	W	26	17455	Oil Well	Producing
UTE TRIBAL 2-26D-55	4301333979	5	S	5	W	26	17456	Oil Well	Producing

From: Linn Operating, LLC
To: Berry Petroleum Company, LLC
Effective:May 1, 2017

BERRY TRIBAL 14-23D-54	4301333989	5	S	4	W	23	17903	Oil Well	Producing
FEDERAL 3-2D-65	4301334001	6	S	5	W	2	16944	Oil Well	Producing
UTE TRIBAL 13-26D-55	4301334002	5	S	5	W	26	17481	Oil Well	Producing
FEDERAL 7-1D-65	4301334015	6	S	5	W	1	17775	Oil Well	Producing
FEDERAL 2-2D-64	4301334018	6	S	4	W	2	17086	Oil Well	Producing
FEDERAL 7-6D-64	4301334020	6	S	4	W	6	17085	Oil Well	Producing
UTE TRIBAL 6-35D-55	4301334028	5	S	5	W	35	17785	Oil Well	Producing
UTE TRIBAL 16-26-54	4301334042	5	S	4	W	26	17413	Oil Well	Producing
BERRY TRIBAL 13-23-54	4301334043	5	S	4	W	23	17100	Oil Well	Producing
UTE TRIBAL 6-28D-55	4301334056	5	S	5	W	28	18593	Oil Well	Producing
UTE TRIBAL 11-28-55	4301334057	5	S	5	W	28	18001	Oil Well	Producing
UTE TRIBAL 8-27D-55	4301334058	5	S	5	W	27	17842	Oil Well	Producing
ST TRIBAL 3-15D-54	4301334059	5	S	4	W	15	17477	Oil Well	Producing
ST TRIBAL 5-15D-54	4301334060	5	S	4	W	15	17479	Oil Well	Producing
FEDERAL 7-11D-65	4301334061	6	S	5	W	11	17776	Oil Well	Producing
FEDERAL 7-3D-65	4301334065	6	S	5	W	3	17124	Oil Well	Producing
MOON TRIBAL 9-27D-54	4301334108	5	S	4	W	27	19095	Oil Well	Producing
MOON TRIBAL 16-27D-54	4301334109	5	S	4	W	27	17414	Oil Well	Producing
UTE TRIBAL 15-22D-54	4301334116	5	S	4	W	22	17415	Oil Well	Producing
UTE TRIBAL 13-35D-55	4301334117	5	S	5	W	35	18442	Oil Well	Producing
UTE TRIBAL 12-26D-55	4301334118	5	S	5	W	26	17786	Oil Well	Producing
FEDERAL 11-6D-64	4301334284	6	S	4	W	6	17615	Oil Well	Producing
FEDERAL 14-6D-64	4301334285	6	S	4	W	6	17616	Oil Well	Producing
FEDERAL 2-6D-64	4301334286	6	S	4	W	6	17663	Oil Well	Producing
FEDERAL 3-5D-64	4301334287	6	S	4	W	5	17617	Oil Well	Producing
FEDERAL 6-5D-64	4301334288	6	S	4	W	5	17649	Oil Well	Producing
SFW TRIBAL 10-10D-54	4301334295	5	S	4	W	10	17564	Oil Well	Producing
SFW TRIBAL 9-10D-54	4301334296	5	S	4	W	10	17565	Oil Well	Producing
STATE TRIBAL 16-10-54	4301350245	5	S	4	W	10	17553	Oil Well	Producing
UTE TRIBAL 6-14D-55	4301350246	5	S	5	W	14	17602	Oil Well	Producing
SFW FEE 15-10-54	4301350247	5	S	4	W	10	17566	Oil Well	Producing
FEDERAL 5-5D-64	4301350259	6	S	4	W	5	17648	Oil Well	Producing
LC TRIBAL 6-22D-56	4301350260	5	S	6	W	22	17567	Oil Well	Producing
FEDERAL 12-6D-64	4301350261	6	S	4	W	6	17618	Oil Well	Producing
FEDERAL 4-5D-64	4301350263	6	S	4	W	5	17661	Oil Well	Producing
FEDERAL 1-6-64	4301350266	6	S	4	W	6	17662	Oil Well	Producing
FEDERAL 4-6D-64	4301350267	6	S	4	W	6	17651	Oil Well	Producing
FEDERAL 3-6D-64	4301350268	6	S	4	W	6	17650	Oil Well	Producing
FEDERAL 5-6D-64	4301350269	6	S	4	W	6	17652	Oil Well	Producing
FEDERAL 8-6D-64	4301350325	6	S	4	W	6	17664	Oil Well	Producing
FEDERAL 10-1D-65	4301350326	6	S	5	W	1	18027	Oil Well	Producing
FEDERAL 11-1D-65	4301350327	6	S	5	W	1	18039	Oil Well	Producing
FEDERAL 12-1D-65	4301350328	6	S	5	W	1	18040	Oil Well	Producing
FEDERAL 13-1D-65	4301350329	6	S	5	W	1	18042	Oil Well	Producing

From: Linn Operating, LLC
To: Berry Petroleum Company, LLC
Effective:May 1, 2017

FEDERAL 14-1D-65	4301350330	6	S	5	W	1	18041	Oil Well	Producing
FEDERAL 13-5D-64	4301350337	6	S	4	W	5	17714	Oil Well	Producing
FEDERAL 14-5D-64	4301350338	6	S	4	W	5	17715	Oil Well	Producing
FEDERAL 9-1D-65	4301350342	6	S	5	W	1	18026	Oil Well	Producing
FEDERAL 13-6D-64	4301350347	6	S	4	W	6	17619	Oil Well	Producing
FEDERAL 11-5D-64	4301350348	6	S	4	W	5	17690	Oil Well	Producing
FEDERAL 12-5D-64	4301350349	6	S	4	W	5	17713	Oil Well	Producing
FEDERAL 8-1D-65	4301350350	6	S	5	W	1	18025	Oil Well	Producing
UTE TRIBAL 3-14D-54	4301350389	5	S	4	W	14	17904	Oil Well	Producing
UTE TRIBAL 1-34D-55	4301350408	5	S	5	W	34	17931	Oil Well	Producing
UTE TRIBAL 7-14-54	4301350409	5	S	4	W	14	17924	Oil Well	Producing
UTE TRIBAL 8-21D-55	4301350435	5	S	5	W	21	17963	Oil Well	Producing
UTE TRIBAL 8-34D-55	4301350436	5	S	5	W	34	17952	Oil Well	Producing
UTE TRIBAL 5-16D-54	4301350475	5	S	4	W	16	17991	Oil Well	Producing
UTE TRIBAL 12-14D-55	4301350476	5	S	5	W	14	17973	Oil Well	Producing
UTE TRIBAL 8-15D-55	4301350477	5	S	5	W	15	17974	Oil Well	Producing
UTE TRIBAL 3-14-55	4301350478	5	S	5	W	14	18002	Oil Well	Producing
UTE TRIBAL 5-14-55	4301350479	5	S	5	W	14	18021	Oil Well	Producing
UTE TRIBAL 8-10D-54	4301350488	5	S	4	W	10	18099	Oil Well	Producing
UTE TRIBAL 7-34-55	4301350510	5	S	5	W	34	17949	Oil Well	Producing
FEDERAL 4-4D-65	4301350521	6	S	5	W	4	18557	Oil Well	Producing
FEDERAL 6-3D-64	4301350522	6	S	4	W	3	18073	Oil Well	Producing
FEDERAL 1-1D-64	4301350524	6	S	4	W	1	18088	Oil Well	Producing
FEDERAL 7-2D-65	4301350525	6	S	5	W	2	18100	Oil Well	Producing
BERRY TRIBAL 12-34D-54	4301350527	5	S	4	W	34	17998	Oil Well	Producing
FEDERAL 15-5D-65	4301350553	6	S	5	W	5	18537	Oil Well	Producing
FEDERAL 11-4D-64	4301350565	6	S	4	W	4	18043	Oil Well	Producing
FEDERAL 6-6D-65	4301350566	6	S	5	W	6	18521	Oil Well	Producing
LC TRIBAL 3-15D-56	4301350598	5	S	6	W	15	18097	Oil Well	Producing
LC TRIBAL 9-16D-56	4301350600	5	S	6	W	16	19544	Oil Well	Producing
LC FEE 16-16D-56	4301350601	5	S	6	W	16	18165	Oil Well	Producing
LC TRIBAL 10-16D-56	4301350602	5	S	6	W	16	18586	Oil Well	Producing
LC TRIBAL 15-22D-56	4301350606	5	S	6	W	22	18278	Oil Well	Producing
LC TRIBAL 5-23D-56	4301350625	5	S	6	W	23	18285	Oil Well	Producing
LC TRIBAL 5-14D-56	4301350661	5	S	6	W	14	18219	Oil Well	Producing
SFW FEE 14-10D-54	4301350686	5	S	4	W	10	18070	Oil Well	Producing
LC FEE 1-22D-56	4301350718	5	S	6	W	22	18101	Oil Well	Producing
FEDERAL 8-2D-65	4301350719	6	S	5	W	2	18614	Oil Well	Producing
FEDERAL 1-2D-64	4301350730	6	S	4	W	2	18585	Oil Well	Producing
FEDERAL 7-2D-64	4301350734	6	S	4	W	2	18584	Oil Well	Producing
FEDERAL 10-6D-64	4301350735	6	S	4	W	6	18162	Oil Well	Producing
FEDERAL 4-3D-64	4301350736	6	S	4	W	3	18621	Oil Well	Producing
FEDERAL 12-3D-64	4301350737	6	S	4	W	3	18620	Oil Well	Producing
LC TRIBAL 3-21D-56	4301350751	5	S	6	W	21	18462	Oil Well	Producing

From: Linn Operating, LLC
To: Berry Petroleum Company, LLC
Effective:May 1, 2017

LC TRIBAL 5-21D-56	4301350752	5	S	6	W	21	18286	Oil Well	Producing
FEDERAL 2-1D-65	4301350759	6	S	5	W	1	18172	Oil Well	Producing
FEDERAL 3-1D-65	4301350760	6	S	5	W	1	18173	Oil Well	Producing
FEDERAL 5-1D-65	4301350761	6	S	5	W	1	18174	Oil Well	Producing
FEDERAL 9-2D-65	4301350762	6	S	5	W	2	18245	Oil Well	Producing
FEDERAL 11-2D-65	4301350763	6	S	5	W	2	18589	Oil Well	Producing
FEDERAL 15-2D-65	4301350764	6	S	5	W	2	18590	Oil Well	Producing
LC TRIBAL 14-14D-56	4301350776	5	S	6	W	14	18287	Oil Well	Producing
LC FEE 2-20D-56	4301350777	5	S	6	W	20	18622	Oil Well	Producing
LC TRIBAL 12-22D-56	4301350780	5	S	6	W	22	18341	Oil Well	Producing
FEDERAL 3-4D-65	4301350782	6	S	5	W	4	18556	Oil Well	Producing
FEDERAL 6-4D-65	4301350783	6	S	5	W	4	19162	Oil Well	Producing
FEDERAL 12-4D-65	4301350784	6	S	5	W	4	19171	Oil Well	Producing
LC TRIBAL 14-15D-56	4301350834	5	S	6	W	15	18362	Oil Well	Producing
UTE TRIBAL 7I-21D-54	4301350852	5	S	4	W	21	18423	Oil Well	Producing
UTE TRIBAL 8L-21D-54	4301350853	5	S	4	W	21	18423	Oil Well	Producing
UTE TRIBAL 10S-21D-54	4301350854	5	S	4	W	21	18423	Oil Well	Producing
UTE TRIBAL 11-11-54	4301350861	5	S	4	W	11	18775	Oil Well	Producing
LC TRIBAL 1-28D-56	4301350865	5	S	6	W	28	19575	Oil Well	Producing
LC TRIBAL 2-28D-56	4301350866	5	S	6	W	28	18592	Oil Well	Producing
LC FEE 8-28D-56	4301350867	5	S	6	W	28	18342	Oil Well	Producing
LC TRIBAL 6-27D-56	4301350868	5	S	6	W	27	18480	Oil Well	Producing
LC FEE 15-23D-56	4301350870	5	S	6	W	23	18410	Oil Well	Producing
LC TRIBAL 15-26-56	4301350871	5	S	6	W	26	18377	Oil Well	Producing
UTE TRIBAL 16-11-55	4301350888	5	S	5	W	11	18707	Oil Well	Producing
LC TRIBAL 2-5D-56	4301350925	5	S	6	W	5	18568	Oil Well	Producing
LC TRIBAL 2-9D-56	4301350926	5	S	6	W	9	18425	Oil Well	Producing
LC FEE 8-29-45	4301350928	4	S	5	W	29	18313	Oil Well	Producing
LC FEE 13-29-45	4301350929	4	S	5	W	29	18426	Oil Well	Producing
LC FEE 9-12D-57	4301350963	5	S	7	W	12	18541	Oil Well	Producing
LC FEE 1-22-57	4301350965	5	S	7	W	22	18558	Oil Well	Producing
LC TRIBAL 11-3D-56	4301350966	5	S	6	W	3	18464	Oil Well	Producing
LC TRIBAL 3-34-45	4301350976	4	S	5	W	34	18661	Oil Well	Producing
LC TRIBAL 9-10D-56	4301350987	5	S	6	W	10	18944	Oil Well	Producing
LC TRIBAL 10-9D-56	4301350990	5	S	6	W	9	18864	Oil Well	Producing
LC FEE 10-31D-45	4301350994	4	S	5	W	31	18443	Oil Well	Producing
VIEIRA TRIBAL 4-4-54	4301350997	5	S	4	W	4	18747	Oil Well	Producing
LC TRIBAL 10-21-56	4301350999	5	S	6	W	21	18439	Oil Well	Producing
FEDERAL 1-5D-64	4301351012	6	S	4	W	5	18720	Oil Well	Producing
FEDERAL 2-5D-64	4301351013	6	S	4	W	5	18723	Oil Well	Producing
FEDERAL 7-5D-64	4301351014	6	S	4	W	5	18722	Oil Well	Producing
FEDERAL 8-5D-64	4301351015	6	S	4	W	5	18721	Oil Well	Producing
MYRIN TRIBAL 15-10-55	4301351024	5	S	5	W	10	18771	Oil Well	Producing
LC TRIBAL 15-15D-56	4301351030	5	S	6	W	15	18440	Oil Well	Producing

From: Linn Operating, LLC
To: Berry Petroleum Company, LLC
Effective:May 1, 2017

LC TRIBAL 9-15D-56	4301351031	5	S	6	W	15	18441	Oil Well	Producing
LC TRIBAL 6-28-45	4301351034	4	S	5	W	28	18700	Oil Well	Producing
FEDERAL 1-12D-65	4301351055	6	S	5	W	12	18739	Oil Well	Producing
FEDERAL 8-12D-65	4301351056	6	S	5	W	12	18718	Oil Well	Producing
FEDERAL 2-12D-65	4301351057	6	S	5	W	12	18738	Oil Well	Producing
FEDERAL 7-12D-65	4301351058	6	S	5	W	12	18717	Oil Well	Producing
LC TRIBAL 8-22D-56	4301351069	5	S	6	W	22	19233	Oil Well	Producing
LC TRIBAL 9-17D-56	4301351070	5	S	6	W	17	18945	Oil Well	Producing
LC TRIBAL 7-27-45	4301351073	4	S	5	W	27	18685	Oil Well	Producing
LC TRIBAL 11-24-45	4301351076	4	S	5	W	24	18745	Oil Well	Producing
FEDERAL 3-12D-65	4301351093	6	S	5	W	12	18705	Oil Well	Producing
FEDERAL 4-12D-65	4301351094	6	S	5	W	12	18704	Oil Well	Producing
FEDERAL 5-12D-65	4301351095	6	S	5	W	12	18702	Oil Well	Producing
FEDERAL 6-12D-65	4301351096	6	S	5	W	12	18703	Oil Well	Producing
UTE TRIBAL 9-5-54	4301351111	5	S	4	W	5	18909	Oil Well	Producing
LC TRIBAL 9-8D-56	4301351112	5	S	6	W	8	18522	Oil Well	Producing
UTE TRIBAL 4-9-54	4301351126	5	S	4	W	9	19059	Oil Well	Producing
UTE TRIBAL 2-9-54	4301351128	5	S	4	W	9	18946	Oil Well	Producing
UTE TRIBAL 1-10-54	4301351129	5	S	4	W	10	18879	Oil Well	Producing
LC TRIBAL 8-30D-56	4301351131	5	S	6	W	30	18539	Oil Well	Producing
FEDERAL 1-1D-65	4301351142	6	S	5	W	1	18623	Oil Well	Producing
UTE TRIBAL 8-9-54	4301351143	5	S	4	W	9	18947	Oil Well	Producing
FEDERAL 15-1D-65	4301351175	6	S	5	W	1	18654	Oil Well	Producing
FEDERAL 16-1D-65	4301351176	6	S	5	W	1	18655	Oil Well	Producing
LC TRIBAL 11-29D-56	4301351183	5	S	6	W	29	18873	Oil Well	Producing
STATE TRIBAL 8-12-55	4301351188	5	S	5	W	12	18986	Oil Well	Producing
LC TRIBAL 11-20D-56	4301351189	5	S	6	W	20	18819	Oil Well	Producing
LC FEE 5-20D-56	4301351190	5	S	6	W	20	18818	Oil Well	Producing
LC FEE 9-19-56	4301351192	5	S	6	W	19	18596	Oil Well	Producing
LC TRIBAL 9-9D-56	4301351198	5	S	6	W	9	18595	Oil Well	Producing
OWL AND THE HAWK 3-9C5	4301351214	3	S	5	W	9	18649	Oil Well	Producing
FEDERAL 16-6-64	4301351217	6	S	4	W	6	18792	Oil Well	Producing
FEDERAL 9-6D-64	4301351218	6	S	4	W	6	18791	Oil Well	Producing
FEDERAL 15-6D-64	4301351219	6	S	4	W	6	18793	Oil Well	Producing
UTE TRIBAL 5-17-55	4301351220	5	S	5	W	17	18841	Oil Well	Producing
UTE TRIBAL 16-3-54	4301351226	5	S	4	W	3	18664	Oil Well	Producing
STATE TRIBAL 8-7-54	4301351228	5	S	4	W	7	18743	Oil Well	Producing
STATE TRIBAL 12-1-55	4301351229	5	S	5	W	1	18741	Oil Well	Producing
STATE TRIBAL 11-2-55	4301351230	5	S	5	W	2	18742	Oil Well	Producing
FEDERAL 1-11-65	4301351231	6	S	5	W	11	18689	Oil Well	Producing
FEDERAL 8-11D-65	4301351232	6	S	5	W	11	18688	Oil Well	Producing
FEDERAL 2-11D-65	4301351233	6	S	5	W	11	18690	Oil Well	Producing
STATE TRIBAL 12-3-55	4301351236	5	S	5	W	3	18744	Oil Well	Producing
UTE TRIBAL 11-4-55	4301351237	5	S	5	W	4	18663	Oil Well	Producing

From: Linn Operating, LLC
To: Berry Petroleum Company, LLC
Effective:May 1, 2017

UTE TRIBAL 4-9-55	4301351238	5	S	5	W	9	18796	Oil Well	Producing
UTE TRIBAL 15-5-55	4301351239	5	S	5	W	5	18740	Oil Well	Producing
UTE TRIBAL 9-21D-55	4301351258	5	S	5	W	21	19401	Oil Well	Producing
UTE FEE 9-9-54	4301351259	5	S	4	W	9	18642	Oil Well	Producing
LC TRIBAL 4-29-45	4301351260	4	S	5	W	29	18719	Oil Well	Producing
UTE FEE 14-9D-54	4301351271	5	S	4	W	9	18684	Oil Well	Producing
UTE FEE 15-9D-54	4301351272	5	S	4	W	9	18687	Oil Well	Producing
LC FEE 10-28D-56	4301351288	5	S	6	W	28	18591	Oil Well	Producing
UTE TRIBAL 8-16D-54	4301351295	5	S	4	W	16	19003	Oil Well	Producing
FEE TRIBAL 4-5-54	4301351303	5	S	4	W	5	19187	Oil Well	Producing
LC TRIBAL 1-26-56	4301351306	5	S	6	W	26	18816	Oil Well	Producing
UTE TRIBAL 6-16D-54	4301351307	5	S	4	W	16	19060	Oil Well	Producing
LC TRIBAL 7-22D-56	4301351308	5	S	6	W	22	18795	Oil Well	Producing
LC TRIBAL 9-22D-56	4301351309	5	S	6	W	22	18794	Oil Well	Producing
STATE TRIBAL 2-12D-55	4301351310	5	S	5	W	12	19444	Oil Well	Producing
LC TRIBAL 9-32D-56	4301351316	5	S	6	W	32	19228	Oil Well	Producing
LC TRIBAL 7-26D-56	4301351319	5	S	6	W	26	18817	Oil Well	Producing
LC FEE 8-6D-56	4301351342	5	S	6	W	6	18657	Oil Well	Producing
LC FEE 10-29D-45	4301351343	4	S	5	W	29	18850	Oil Well	Producing
LC TRIBAL 1-7D-56	4301351344	5	S	6	W	7	18774	Oil Well	Producing
LC TRIBAL 9-7D-56	4301351346	5	S	6	W	7	18773	Oil Well	Producing
UTE TRIBAL 7-10D-54	4301351365	5	S	4	W	10	19391	Oil Well	Producing
LC TRIBAL 11-10D-56	4301351369	5	S	6	W	10	18840	Oil Well	Producing
LC FEE 1-31D-45	4301351371	4	S	5	W	31	18686	Oil Well	Producing
LC TRIBAL 9-26D-56	4301351381	5	S	6	W	26	19433	Oil Well	Producing
LC TRIBAL 14-21D-56	4301351384	5	S	6	W	21	18877	Oil Well	Producing
LC TRIBAL 4-22D-56	4301351385	5	S	6	W	22	18878	Oil Well	Producing
LC TRIBAL 8-21D-56	4301351392	5	S	6	W	21	18874	Oil Well	Producing
UTE TRIBAL 1-17-55	4301351393	5	S	5	W	17	18848	Oil Well	Producing
LC TRIBAL 4-33D-45	4301351401	4	S	5	W	33	18853	Oil Well	Producing
LC TRIBAL 16-21D-56	4301351407	5	S	6	W	21	18875	Oil Well	Producing
UTE TRIBAL 2-10D-54	4301351411	5	S	4	W	10	19172	Oil Well	Producing
UTE TRIBAL 8-17D-55	4301351413	5	S	5	W	17	19388	Oil Well	Producing
UTE TRIBAL 4-10D-54	4301351414	5	S	4	W	10	19069	Oil Well	Producing
LC TRIBAL 2-21D-56	4301351418	5	S	6	W	16	19252	Oil Well	Producing
LC TRIBAL 1-23D-45	4301351425	4	S	5	W	23	18855	Oil Well	Producing
LC TRIBAL 2-28D-45	4301351429	4	S	5	W	28	18701	Oil Well	Producing
LC TRIBAL 9-28D-45	4301351430	4	S	5	W	28	18656	Oil Well	Producing
LC FEE 1-1-56	4301351458	5	S	6	W	1	18829	Oil Well	Producing
LC Tribal 12-32-45	4301351465	4	S	5	W	32	18772	Oil Well	Producing
UTE TRIBAL 2-5-54	4301351520	5	S	4	W	5	18880	Oil Well	Producing
LC Tribal 3-32D-45	4301351561	4	S	5	W	32	18842	Oil Well	Producing
LC TRIBAL 5-15D-56	4301351562	5	S	6	W	15	19253	Oil Well	Producing
LC FEE 16-36-56	4301351611	5	S	6	W	36	19096	Oil Well	Producing

From: Linn Operating, LLC
To: Berry Petroleum Company, LLC
Effective:May 1, 2017

LC FEE 10-36D-56	4301351622	5	S	6	W	36	19583	Oil Well	Producing
LC TRIBAL 15-34-56	4301351647	5	S	6	W	34	18962	Oil Well	Producing
LC TRIBAL 15-27-56	4301351649	5	S	6	W	27	19605	Oil Well	Producing
LC TRIBAL 11-27D-56	4301351650	5	S	6	W	27	19606	Oil Well	Producing
LC TRIBAL 1-34D-56	4301351660	5	S	6	W	34	18988	Oil Well	Producing
LC TRIBAL 2-29D-45	4301351705	4	S	5	W	29	19545	Oil Well	Producing
LC FEE 13-23-56	4301351706	5	S	6	W	23	18994	Oil Well	Producing
LC FEE 11-23D-56	4301351707	5	S	6	W	23	18995	Oil Well	Producing
LC TRIBAL 3-33-56	4301351711	5	S	6	W	33	19242	Oil Well	Producing
LC FEE 11-29D-45	4301351743	4	S	5	W	29	19188	Oil Well	Producing
LC TAYLOR FEE 14-22D-56	4301351744	5	S	6	W	22	19508	Oil Well	Producing
LC FEE 4-28D-45	4301351745	4	S	5	W	29	18849	Oil Well	Producing
LC FEE 14-6D-56	4301351787	5	S	6	W	6	18910	Oil Well	Producing
LC FEE 15-6-56	4301351792	5	S	6	W	6	19334	Oil Well	Producing
LC TRIBAL 7-27D-56	4301351823	5	S	6	W	27	19608	Oil Well	Producing
LC Fee 14-36D-56	4301351878	5	S	6	W	36	19376	Oil Well	Producing
LC Fee 12-36-56	4301351883	5	S	6	W	36	19377	Oil Well	Producing
LC Tribal 6-29D-45	4301351902	4	S	5	W	29	19402	Oil Well	Producing
FEDERAL 6-7-64	4301351915	6	S	4	W	7	19117	Oil Well	Producing
FEDERAL 3-7D-64	4301351916	6	S	4	W	7	19115	Oil Well	Producing
FEDERAL 4-7D-64	4301351917	6	S	4	W	7	19110	Oil Well	Producing
FEDERAL 5-7D-64	4301351918	6	S	4	W	7	19111	Oil Well	Producing
FEDERAL 2-7-64	4301351919	6	S	4	W	7	19139	Oil Well	Producing
FEDERAL 1-7D-64	4301351920	6	S	4	W	7	19140	Oil Well	Producing
FEDERAL 12-7D-64	4301351924	6	S	4	W	7	19025	Oil Well	Producing
FEDERAL 11-7D-64	4301351925	6	S	4	W	7	19039	Oil Well	Producing
FEDERAL 13-7D-64	4301351926	6	S	4	W	7	19026	Oil Well	Producing
FEDERAL 14-7D-64	4301351927	6	S	4	W	7	19040	Oil Well	Producing
FEDERAL 7-7D-64	4301351933	6	S	4	W	7	19141	Oil Well	Producing
FEDERAL 8-7D-64	4301351934	6	S	4	W	7	19142	Oil Well	Producing
FEDERAL 9-7D-64	4301351935	6	S	4	W	7	19143	Oil Well	Producing
FEDERAL 10-7D-64	4301351936	6	S	4	W	7	19144	Oil Well	Producing
ABBOTT FEE 6-6-54	4301351948	5	S	4	W	6	18963	Oil Well	Producing
ABBOTT FEE 2-6D-54	4301351949	5	S	4	W	6	18974	Oil Well	Producing
ABBOTT FEE 4-6-54	4301351952	5	S	4	W	6	18965	Oil Well	Producing
Federal 7-9D-64	4301351990	6	S	4	W	9	19721	Oil Well	Producing
Federal 15-12D-65	4301351992	6	S	5	W	12	19051	Oil Well	Producing
Federal 10-12D-65	4301351999	6	S	5	W	12	19052	Oil Well	Producing
Federal 9-12D-65	4301352000	6	S	5	W	12	19053	Oil Well	Producing
Federal 16-12D-65	4301352003	6	S	5	W	12	19054	Oil Well	Producing
Federal 4-6D-65	4301352005	6	S	5	W	6	19173	Oil Well	Producing
Federal 12-6D-65	4301352006	6	S	5	W	6	19174	Oil Well	Producing
Federal 1-6D-65	4301352012	6	S	5	W	6	19189	Oil Well	Producing
Federal 3-6D-65	4301352014	6	S	5	W	6	19190	Oil Well	Producing

From: Linn Operating, LLC
To: Berry Petroleum Company, LLC
Effective:May 1, 2017

Federal 3-9D-64	4301352015	6	S	4	W	9	19678	Oil Well	Producing
Federal 2-6-65	4301352017	6	S	5	W	6	19191	Oil Well	Producing
Federal 7-6D-65	4301352018	6	S	5	W	6	19192	Oil Well	Producing
Federal 6-9-64	4301352021	6	S	4	W	9	19679	Oil Well	Producing
Federal 8-9D-64	4301352023	6	S	4	W	9	19723	Oil Well	Producing
Federal 5-9D-64	4301352035	6	S	4	W	9	19680	Oil Well	Producing
Federal 11-9D-64	4301352037	6	S	4	W	9	19687	Oil Well	Producing
Federal 12-9D-64	4301352038	6	S	4	W	9	19688	Oil Well	Producing
Federal 13-9D-64	4301352039	6	S	4	W	9	19689	Oil Well	Producing
Federal 2-9D-64	4301352042	6	S	4	W	9	19724	Oil Well	Producing
Federal 16-11D-65	4301352045	6	S	5	W	11	19070	Oil Well	Producing
Federal 15-11D-65	4301352046	6	S	5	W	11	19076	Oil Well	Producing
Federal 10-11D-65	4301352047	6	S	5	W	11	19077	Oil Well	Producing
Federal 9-11D-65	4301352048	6	S	5	W	11	19071	Oil Well	Producing
Federal 11-12D-65	4301352049	6	S	5	W	12	19121	Oil Well	Producing
Federal 12-12D-65	4301352050	6	S	5	W	12	19122	Oil Well	Producing
Federal 13-12D-65	4301352052	6	S	5	W	12	19123	Oil Well	Producing
Federal 14-12D-65	4301352053	6	S	5	W	12	19124	Oil Well	Producing
LC Tribal 12-28D-45	4301352089	4	S	5	W	28	19378	Oil Well	Producing
LC Tribal 2-32D-45	4301352113	4	S	5	W	32	19348	Oil Well	Producing
LC Tribal 16-29D-45	4301352114	4	S	5	W	32	19349	Oil Well	Producing
Vieira Tribal 3-4D-54	4301352145	5	S	4	W	4	19210	Oil Well	Producing
Vieira Tribal 5-4D-54	4301352146	5	S	4	W	4	19193	Oil Well	Producing
Vieira Tribal 6-4D-54	4301352147	5	S	4	W	4	19216	Oil Well	Producing
Lamplugh Tribal 6-3D-54	4301352148	5	S	4	W	3	19289	Oil Well	Producing
Lamplugh Tribal 5-3D-54	4301352149	5	S	4	W	3	19290	Gas Well	Producing
Lamplugh Tribal 4-3D-54	4301352150	5	S	4	W	3	19291	Oil Well	Producing
Lamplugh Tribal 3-3D-54	4301352151	5	S	4	W	3	19292	Oil Well	Producing
UTE Tribal 6-35D-54	4301352158	5	S	4	W	35	19254	Gas Well	Producing
UTE Tribal 4-35D-54	4301352159	5	S	4	W	35	19255	Gas Well	Producing
Heiner Tribal 3-11D-54	4301352165	5	S	4	W	11	19194	Oil Well	Producing
Heiner Tribal 4-11-54	4301352166	5	S	4	W	11	19195	Oil Well	Producing
Heiner Tribal 5-11D-54	4301352167	5	S	4	W	11	19196	Oil Well	Producing
Conolly Tribal 1-11D-54	4301352168	5	S	4	W	11	19270	Oil Well	Producing
Conolly Tribal 2-11D-54	4301352169	5	S	4	W	11	19197	Oil Well	Producing
Conolly Tribal 7-11D-54	4301352170	5	S	4	W	11	19280	Oil Well	Producing
Conolly Tribal 8-11D-54	4301352171	5	S	4	W	11	19281	Oil Well	Producing
Casper Tribal 1-5D-54	4301352180	5	S	4	W	5	19198	Oil Well	Producing
Fee Tribal 6-5D-54	4301352181	5	S	4	W	5	19199	Oil Well	Producing
Fee Tribal 5-5D-54	4301352182	5	S	4	W	5	19200	Oil Well	Producing
Fee Tribal 3-5D-54	4301352184	5	S	4	W	5	19201	Oil Well	Producing
Casper Tribal 7-5D-54	4301352185	5	S	4	W	5	19202	Oil Well	Producing
UTE Tribal 10-35D-54	4301352198	5	S	4	W	35	19320	Oil Well	Producing
UTE Tribal 14-35D-54	4301352199	5	S	4	W	35	19311	Gas Well	Producing

From: Linn Operating, LLC
To: Berry Petroleum Company, LLC
Effective:May 1, 2017

UTE Tribal 12-35D-54	4301352200	5	S	4	W	35	19312	Oil Well	Producing
UTE Tribal 14-18D-54	4301352213	5	S	4	W	18	19509	Gas Well	Producing
UTE Tribal 16-35D-54	4301352230	5	S	4	W	35	19321	Oil Well	Producing
Evans Tribal 1-3-54	4301352234	5	S	4	W	3	19264	Oil Well	Producing
Evans Tribal 2-3D-54	4301352235	5	S	4	W	3	19265	Oil Well	Producing
Evans Tribal 7-3D-54	4301352236	5	S	4	W	3	19256	Oil Well	Producing
Evans Tribal 8-3D-54	4301352237	5	S	4	W	3	19257	Oil Well	Producing
Ute Tribal 9-3D-54	4301352249	5	S	4	W	3	19236	Oil Well	Producing
Ute Tribal 15-3D-54	4301352250	5	S	4	W	3	19237	Oil Well	Producing
Ute Tribal 10-3-54	4301352251	5	S	4	W	3	19238	Oil Well	Producing
Ute Tribal 14-3D-54	4301352298	5	S	4	W	3	19258	Oil Well	Producing
Ute Tribal 12-3D-54	4301352299	5	S	4	W	3	19259	Oil Well	Producing
Ute Tribal 11-3D-54	4301352300	5	S	4	W	3	19260	Oil Well	Producing
Ute Tribal 16-4D-54	4301352302	5	S	4	W	4	19350	Oil Well	Producing
Ute Tribal 15-4D-54	4301352303	5	S	4	W	4	19293	Oil Well	Producing
Ute Tribal 9-4D-54	4301352305	5	S	4	W	4	19304	Oil Well	Producing
Ute Tribal 10-4D-54	4301352307	5	S	4	W	4	19294	Oil Well	Producing
UTE Tribal 15-31D-55	4301352309	5	S	5	W	31	19472	Gas Well	Producing
UTE Tribal 16-31D-55	4301352318	5	S	5	W	31	19473	Gas Well	Producing
UTE Tribal 2-35D-54	4301352319	5	S	4	W	35	19322	Oil Well	Producing
UTE Tribal 8-35D-54	4301352320	5	S	4	W	35	19323	Oil Well	Producing
Abbott Fee 5-6D-54	4301352326	5	S	4	W	6	19351	Oil Well	Producing
Ute Tribal 6-11D-54	4301352330	5	S	4	W	11	19243	Oil Well	Producing
Ute Tribal 12-11D-54	4301352331	5	S	4	W	11	19244	Oil Well	Producing
Ute Tribal 14-11D-54	4301352332	5	S	4	W	11	19245	Oil Well	Producing
Ute Tribal 11-4D-54	4301352343	5	S	4	W	4	19305	Oil Well	Producing
Ute Tribal 13-4D-54	4301352345	5	S	4	W	4	19353	Oil Well	Producing
Ute Tribal 14-4D-54	4301352346	5	S	4	W	4	19306	Oil Well	Producing
State Tribal 7-12D-55	4301352369	5	S	5	W	12	19651	Oil Well	Producing
State Tribal 1-12D-55	4301352390	5	S	5	W	12	19445	Oil Well	Producing
State Tribal 16-6D-54	4301352394	5	S	4	W	6	19424	Oil Well	Producing
State Tribal 9-6D-54	4301352396	5	S	4	W	6	19426	Oil Well	Producing
State Tribal 7-7D-54	4301352426	5	S	4	W	7	19496	Oil Well	Producing
State Tribal 1-7D-54	4301352427	5	S	4	W	7	19497	Oil Well	Producing
State Tribal 2-7D-54	4301352428	5	S	4	W	7	19498	Oil Well	Producing
State Tribal 3-7D-54	4301352429	5	S	4	W	7	19517	Oil Well	Producing
State Tribal 4-7D-54	4301352431	5	S	4	W	7	19546	Oil Well	Producing
State Tribal 5-7D-54	4301352432	5	S	4	W	7	19547	Oil Well	Producing
State Tribal 6-7D-54	4301352433	5	S	4	W	7	19518	Oil Well	Producing
State Tribal 11-6D-54	4301352452	5	S	4	W	6	19474	Oil Well	Producing
State Tribal 12-6D-54	4301352453	5	S	4	W	6	19475	Oil Well	Producing
State Tribal 13-6D-54	4301352454	5	S	4	W	6	19476	Oil Well	Producing
Ute Tribal 1-9D-54	4301352465	5	S	4	W	9	19356	Oil Well	Producing
Ute Tribal 7-9D-54	4301352466	5	S	4	W	9	19357	Oil Well	Producing

From: Linn Operating, LLC
To: Berry Petroleum Company, LLC
Effective:May 1, 2017

UTE TRIBAL 12-5D-54	4301352480	5	S	4	W	5	19499	Oil Well	Producing
UTE TRIBAL 13-5D-54	4301352484	5	S	4	W	5	19500	Oil Well	Producing
UTE TRIBAL 14-5D-54	4301352493	5	S	4	W	5	19510	Oil Well	Producing
Federal 14-6D-65	4301352495	6	S	5	W	6	19610	Oil Well	Producing
Federal 13-6D-65	4301352496	6	S	5	W	6	19611	Oil Well	Producing
Federal 11-6D-65	4301352497	6	S	5	W	6	19591	Oil Well	Producing
Ute Tribal 16-5D-54	4301352545	5	S	4	W	5	19335	Oil Well	Producing
Ute Tribal 15-5D-54	4301352546	5	S	4	W	5	19358	Oil Well	Producing
Ute Tribal 10-5D-54	4301352547	5	S	4	W	5	19359	Oil Well	Producing
Ute Tribal 8-5D-54	4301352548	5	S	4	W	5	19336	Oil Well	Producing
State Tribal 13-11D-54	4301352561	5	S	4	W	10	19519	Oil Well	Producing
State Tribal 1-18D-54	4301352568	5	S	4	W	18	19434	Oil Well	Producing
State Tribal 2-18D-54	4301352576	5	S	4	W	18	19427	Oil Well	Producing
State Tribal 8-18D-54	4301352577	5	S	4	W	18	19428	Oil Well	Producing
Federal 16-6D-65	4301352590	6	S	5	W	6	19616	Oil Well	Producing
Federal 15-6D-65	4301352591	6	S	5	W	6	19617	Oil Well	Producing
State Tribal 4-18D-54	4301352607	5	S	4	W	18	19435	Oil Well	Producing
State Tribal 3-18D-54	4301352608	5	S	4	W	18	19436	Oil Well	Producing
State Tribal 6-18D-54	4301352609	5	S	4	W	18	19437	Oil Well	Producing
State Tribal 5-12-55	4301352643	5	S	5	W	12	19446	Oil Well	Producing
State Tribal 12-12D-55	4301352644	5	S	5	W	12	19447	Oil Well	Producing
State Tribal 6-12D-55	4301352645	5	S	5	W	12	19438	Oil Well	Producing
State Tribal 16-1D-55	4301352646	5	S	5	W	1	19483	Oil Well	Producing
State Tribal 15-1D-55	4301352647	5	S	5	W	1	19484	Oil Well	Producing
State Tribal 10-1D-55	4301352648	5	S	5	W	1	19485	Oil Well	Producing
State Tribal 9-1D-55	4301352649	5	S	5	W	1	19486	Oil Well	Producing
LC FEE 16-15D-56	4301352655	5	S	6	W	14	19520	Oil Well	Producing
LC Tribal 2-22D-56	4301352663	5	S	6	W	22	19548	Oil Well	Producing
LC Tribal 3-22D-56	4301352664	5	S	6	W	22	19549	Oil Well	Producing
UTE TRIBAL 14-30D-55	4301352687	5	S	5	W	30	19836	Oil Well	Producing
UTE TRIBAL 13-30D-55	4301352688	5	S	5	W	30	19743	Oil Well	Producing
UTE TRIBAL 12-30D-55	4301352689	5	S	5	W	30	19744	Oil Well	Producing
UTE TRIBAL 11-30D-55	4301352690	5	S	5	W	30	19745	Oil Well	Producing
UTE TRIBAL 12-31D-55	4301352699	5	S	5	W	31	19774	Oil Well	Producing
UTE TRIBAL 13-31D-55	4301352700	5	S	5	W	31	19775	Oil Well	Producing
UTE TRIBAL 14-31D-55	4301352701	5	S	5	W	31	19776	Oil Well	Producing
UTE TRIBAL 11-31-55	4301352703	5	S	5	W	31	19777	Oil Well	Producing
UTE TRIBAL 9-30D-55	4301352731	5	S	5	W	30	19732	Oil Well	Producing
UTE TRIBAL 15-30D-55	4301352737	5	S	5	W	30	19725	Oil Well	Producing
UTE TRIBAL 3-31D-55	4301352757	5	S	5	W	31	19778	Oil Well	Producing
UTE TRIBAL 5-31D-55	4301352758	5	S	5	W	31	19779	Oil Well	Producing
UTE TRIBAL 6-31D-55	4301352759	5	S	5	W	31	19746	Oil Well	Producing
Federal 8-14D-65	4301352767	6	S	5	W	14	19592	Oil Well	Producing
Federal 7-14D-65	4301352768	6	S	5	W	14	19593	Oil Well	Producing

From: Linn Operating, LLC
To: Berry Petroleum Company, LLC
Effective:May 1, 2017

Federal 2-14D-65	4301352769	6	S	5	W	14	19594	Oil Well	Producing
Federal 1-14D-65	4301352770	6	S	5	W	14	19595	Oil Well	Producing
UTE TRIBAL 4-31D-55	4301352795	5	S	5	W	31	19780	Oil Well	Producing
Federal 1-13D-65	4301352800	6	S	5	W	13	19596	Oil Well	Producing
Federal 2-13-65	4301352801	6	S	5	W	13	19501	Oil Well	Producing
Federal 7-13D-65	4301352802	6	S	5	W	13	19597	Oil Well	Producing
Federal 8-13D-65	4301352803	6	S	5	W	13	19502	Oil Well	Producing
Federal 12-8D-64	4301352832	6	S	4	W	7	19550	Oil Well	Producing
Federal 5-8D-64	4301352833	6	S	4	W	7	19551	Oil Well	Producing
Federal 4-8D-64	4301352834	6	S	4	W	7	19552	Oil Well	Producing
Federal 3-8D-64	4301352845	6	S	4	W	5	19503	Oil Well	Producing
LC TRIBAL 4H-31-56	4301351738	5	S	6	W	31		Oil Well	Returned APD (Unapproved)
LC Fee 11-22-57	4301352127	5	S	7	W	22		Oil Well	Returned APD (Unapproved)
LC Fee 13-22D-57	4301352131	5	S	7	W	22		Oil Well	Returned APD (Unapproved)
LC Tribal 5-22D-57	4301352133	5	S	7	W	22		Oil Well	Returned APD (Unapproved)
LC Tribal 15-22D-57	4301352134	5	S	7	W	22		Oil Well	Returned APD (Unapproved)
LC Tribal 11-18D-56	4301352140	5	S	6	W	18		Oil Well	Returned APD (Unapproved)
LC Tribal 13-18D-56	4301352141	5	S	6	W	18		Oil Well	Returned APD (Unapproved)
LC Tribal 15-18D-56	4301352142	5	S	6	W	18		Oil Well	Returned APD (Unapproved)
LC Tribal 7-18D-56	4301352153	5	S	6	W	18		Oil Well	Returned APD (Unapproved)
LC Tribal 5-18D-56	4301352154	5	S	6	W	18		Oil Well	Returned APD (Unapproved)
LC Tribal 3-18-56	4301352155	5	S	6	W	18		Oil Well	Returned APD (Unapproved)
LC Tribal 6-19D-56	4301352247	5	S	6	W	19		Oil Well	Returned APD (Unapproved)
LC Tribal 4-19D-56	4301352248	5	S	6	W	19		Oil Well	Returned APD (Unapproved)
Abbott Fee 3-6D-54	4301352325	5	S	4	W	6		Oil Well	Returned APD (Unapproved)
LC Fee 9-11D-56	4301352479	5	S	6	W	11		Oil Well	Returned APD (Unapproved)
Williams Tribal 8-4D-54	4301352650	5	S	4	W	4		Oil Well	Returned APD (Unapproved)
Williams Tribal 7-4D-54	4301352651	5	S	4	W	4		Oil Well	Returned APD (Unapproved)
Williams Tribal 2-4D-54	4301352652	5	S	4	W	4		Oil Well	Returned APD (Unapproved)
Williams Tribal 1-4D-54	4301352653	5	S	4	W	4		Oil Well	Returned APD (Unapproved)
Foy Fee 12-34D-55	4301353087	5	S	5	W	34		Oil Well	Returned APD (Unapproved)
Foy Fee 6-34D-55	4301353088	5	S	5	W	34		Oil Well	Returned APD (Unapproved)
Foy Fee 5-34D-55	4301353089	5	S	5	W	34		Oil Well	Returned APD (Unapproved)
Foy Fee 3-34D-55	4301353090	5	S	5	W	34		Oil Well	Returned APD (Unapproved)
Foy Tribal 13-34D-55	4301353119	5	S	5	W	34		Oil Well	Returned APD (Unapproved)
Foy Tribal 14-34-55	4301353120	5	S	5	W	34		Oil Well	Returned APD (Unapproved)
UTE FEE 10-13D-55	4301353129	5	S	5	W	13		Oil Well	Returned APD (Unapproved)
LC Tribal 10-15D-56	4301353163	5	S	6	W	15		Oil Well	Returned APD (Unapproved)
LC Tribal 9-21D-56	4301353164	5	S	6	W	21		Oil Well	Returned APD (Unapproved)
LC Tribal 7-21D-56	4301353165	5	S	6	W	21		Oil Well	Returned APD (Unapproved)
LC Tribal 11-15D-56	4301353189	5	S	6	W	15		Oil Well	Returned APD (Unapproved)
SCOFIELD THORPE 22-41X RIG SKID	4300730890	12	S	7	E	22	13719	Gas Well	Shut-in
SCOFIELD-THORPE 35-13	4300730991	12	S	7	E	35	14846	Gas Well	Shut-in
SCOFIELD-THORPE 23-31	4300731001	12	S	7	E	23	14923	Gas Well	Shut-in

From: Linn Operating, LLC
To: Berry Petroleum Company, LLC
Effective:May 1, 2017

WIRE FENCE CYN FED 15-1	4301330404	6	S	5	W	15	8233	Gas Well	Shut-in
R FORK ANTELOPE CYN FED 25-1	4301330406	6	S	5	W	25	8234	Oil Well	Shut-in
WOLF HOLLOW 22-1	4301330425	6	S	5	W	22	10370	Gas Well	Shut-in
Z and T UTE TRIBAL 12-22	4301331311	5	S	4	W	22	11421	Oil Well	Shut-in
UTE TRIBAL 15-17	4301331649	5	S	4	W	17	11956	Oil Well	Shut-in
UTE TRIBAL 3-19	4301331830	5	S	4	W	19	12197	Oil Well	Shut-in
UTE TRIBAL 14-17	4301332147	5	S	4	W	17	12755	Oil Well	Shut-in
UTE TRIBAL 7-30	4301332167	5	S	4	W	30	12945	Oil Well	Shut-in
UTE TRIBAL 1-33	4301332185	5	S	4	W	33	13024	Oil Well	Shut-in
UTE TRIBAL 5-24-55	4301332263	5	S	5	W	24	13621	Oil Well	Shut-in
UTE TRIBAL 10-16-55	4301332345	5	S	5	W	16	13693	Oil Well	Shut-in
UTE TRIBAL 15-30-54	4301332382	5	S	4	W	30	13944	Oil Well	Shut-in
UTE TRIBAL 14-21-54	4301332384	5	S	4	W	21	13946	Oil Well	Shut-in
UTE TRIBAL 13-30-54	4301332409	5	S	4	W	30	13968	Oil Well	Shut-in
UTE TRIBAL 3-33-54	4301332412	5	S	4	W	33	13938	Oil Well	Shut-in
UTE TRIBAL 1-20-55	4301332414	5	S	5	W	20	14548	Oil Well	Shut-in
UTE TRIBAL 9-29-54	4301332566	5	S	4	W	29	14369	Oil Well	Shut-in
UTE TRIBAL 6-24-54	4301332570	5	S	4	W	24	14299	Oil Well	Shut-in
UTE TRIBAL 10-14-55	4301332601	5	S	5	W	14	14331	Oil Well	Shut-in
UTE TRIBAL 11-5-54	4301332664	5	S	4	W	5	14415	Oil Well	Shut-in
UTE TRIBAL 16-24-55	4301332672	5	S	5	W	24	14384	Gas Well	Shut-in
MYRIN TRIBAL 14-19-55	4301332782	5	S	5	W	19	15184	Oil Well	Shut-in
MOON TRIBAL 13-27-54	4301332801	5	S	4	W	27	15057	Oil Well	Shut-in
MOON TRIBAL 11-27-54	4301332845	5	S	4	W	27	15135	Oil Well	Shut-in
UTE TRIBAL 15-15-55	4301332855	5	S	5	W	15	15114	Oil Well	Shut-in
UTE TRIBAL 10-24-54	4301332932	5	S	4	W	24	15364	Oil Well	Shut-in
UTE TRIBAL 8-24-54	4301332933	5	S	4	W	24	15402	Oil Well	Shut-in
UTE TRIBAL 12-15-55	4301332981	5	S	5	W	15	15348	Oil Well	Shut-in
UTE TRIBAL 2-23-55	4301333045	5	S	5	W	23	15416	Oil Well	Shut-in
TAYLOR FEE 7-14-56	4301333140	5	S	6	W	14	15601	Oil Well	Shut-in
WILCOX FEE 15-16-56	4301333151	5	S	6	W	16	15527	Oil Well	Shut-in
UTE TRIBAL 11-13-55	4301333268	5	S	5	W	13	15692	Oil Well	Shut-in
UTE TRIBAL 7-14-55	4301333269	5	S	5	W	14	15693	Oil Well	Shut-in
FEDERAL 10-3-65	4301333386	6	S	5	W	3	16297	Oil Well	Shut-in
BERRY TRIBAL 16-34D-54	4301333464	5	S	4	W	34	16280	Oil Well	Shut-in
FEDERAL 10-2-65	4301333542	6	S	5	W	2	16181	Oil Well	Shut-in
UTE FEE 2-13-55	4301333720	5	S	5	W	13	18659	Oil Well	Shut-in
LC TRIBAL 13-16D-56	4301334282	5	S	6	W	16	17601	Oil Well	Shut-in
LC TRIBAL 4-27D-56	4301350262	5	S	6	W	27	17568	Oil Well	Shut-in
LC TRIBAL 8-16D-56	4301350599	5	S	6	W	16	18161	Oil Well	Shut-in
LC TRIBAL 15-8D-56	4301351060	5	S	6	W	8	18862	Oil Well	Shut-in
UTE TRIBAL 6-9-54	4301351127	5	S	4	W	9	19017	Oil Well	Shut-in
LC TRIBAL 16-30D-56	4301351132	5	S	6	W	30	18540	Oil Well	Shut-in
STATE TRIBAL 15-6-54	4301351227	5	S	4	W	6	18746	Oil Well	Shut-in

From: Linn Operating, LLC
To: Berry Petroleum Company, LLC
Effective:May 1, 2017

LC TRIBAL 1-29-56	4301351442	5	S	6	W	29	18876	Oil Well	Shut-in
CC Fee 7R-28-38	4301351852	3	S	8	W	28	18863	Oil Well	Shut-in
ABBOTT FEE 8-6D-54	4301351950	5	S	4	W	6	18964	Oil Well	Shut-in
Federal 1-9D-64	4301352020	6	S	4	W	9	19722	Oil Well	Shut-in
FEDERAL 14-9D-64	4301352040	6	S	4	W	9	19690	Oil Well	Shut-in
Ute Tribal 12-4D-54	4301352344	5	S	4	W	4	19352	Oil Well	Shut-in
State Tribal 10-6D-54	4301352395	5	S	4	W	6	19425	Oil Well	Shut-in
State Tribal 14-6D-54	4301352455	5	S	4	W	6	19477	Oil Well	Shut-in
Federal 10-6D-65	4301352498	6	S	5	W	6	19612	Oil Well	Shut-in
Federal 2-7D-65	4301352537	6	S	5	W	7	19630	Oil Well	Shut-in
Federal 5-7D-65	4301352538	6	S	5	W	7	19613	Oil Well	Shut-in
Federal 4-7D-65	4301352541	6	S	5	W	7	19614	Oil Well	Shut-in
Federal 3-7-65	4301352560	6	S	5	W	7	19609	Oil Well	Shut-in
Federal 1-7D-65	4301352589	6	S	5	W	6	19615	Oil Well	Shut-in

UPDATE ON SI WELLS FOR NAME CHANGE 4/10/17

Future Berry Petroleum Wells

Scofield Thorpe 22-41X Rig Skid:
Future Berry Petroleum well as of May 1st, 2017.

Scofield Thorpe 35-13
Future Berry Petroleum well as of May 1st, 2017.

Scofield Thorpe 23-31
Future Berry Petroleum well as of May 1st, 2017.

Wilcox Fee 15-16-56
Future Berry Petroleum well as of May 1st, 2017.

LC Fee 8-15D-56
Future Berry Petroleum well as of May 1st, 2017.

CC Fee 7R-28-38
Future Berry Petroleum well as of May 1st, 2017.

Taylor Fee 7-14-56
Future Berry Petroleum well as of May 1st, 2017.

SFW Fee 13-10D-54
Future Berry Petroleum well as of May 1st, 2017.

LINN Energy Wells

Mark 2-25A2
Received approved LINN Energy budget this month. Repair work under review.

Mitchell 2-4B1
Received approved LINN Energy budget this month. Repair work under review.

Galloway #2-14B2
Reclaim existing pit in Q2 2017. Project delayed due to winter weather.

Hamblin 2-26-A2
Received approved LINN Energy budget this month. Repair work under review.

LINN Energy

STATE OF UTAH SHUT IN LIST ESTIMATED P/A COSTS

4/10/2017

WELLNAME	FUTURE OPERATOR		ESTIMATED P/A COSTS
Scofield Thorpe 22-41X Rig Skid	Berry Petroleum Company	$	45,000
Scofield Thorpe 35-13	Berry Petroleum Company	$	45,000
Scofield Thorpe 23-31	Berry Petroleum Company	$	45,000
SFW Fee 13-10D-54	Berry Petroleum Company	$	35,000
Wilcox Fee 15-16-56	Berry Petroleum Company	$	35,000
LC Fee 8-15D-56	Berry Petroleum Company	$	35,000
CC Fee 7R-28-38	Berry Petroleum Company	$	75,000
Taylor Fee 7-14-56	Berry Petroleum Company	$	35,000
	Berry Petroleum Company TOTAL	**$**	**350,000**
Mark 2-25A2	LINN Operating	$	75,000
Mitchell 2-4B1	LINN Operating	$	75,000
Galloway 2-14B2	LINN Operating	$	30,000
Hamblin 2-26A2	LINN Operating	$	75,000
	LINN Operating TOTAL	**$**	**255,000**

Rachel Medina <rachelmedina@utah.gov>

Linn Name Change and Berry Operator Change

2 messages

Rachel Medina <rachelmedina@utah.gov> Thu, Apr 20, 2017 at 11:58 AM
To: Dustin Doucet <dustindoucet@utah.gov>, Randy Thackeray <randythackeray@utah.gov>

Dustin,

Linn is planning on moving all the wells from Linn Inc. to Linn LLC, then complete an operator change for the Berry wells. Eight of the wells on the non-compliance list will be move to Berry. Are you okay with us moving all the wells to Berry, putting the eight wells on the blanket bond, then getting the shut in plans and full cost bond when the move to Berry is complete?

The blanket bond and full cost bonding for the Linn wells will of course be in place before we complete the move.

Attached is the plugging estimates for all twelve wells, as well as a list of which wells are going to the new Linn and Berry. They have some details on what they plan to do with the wells on the Update list. Will this be acceptable for a shut in plan and plugging estimates?

–

Rachel Medina
Division of Oil, Gas & Mining
Bonding Technician
801-538-5260

20170420110137.pdf
58K

Dustin Doucet <dustindoucet@utah.gov> Thu, Apr 27, 2017 at 10:40 AM
To: Rachel Medina <rachelmedina@utah.gov>
Cc: Randy Thackeray <randythackeray@utah.gov>

I'm o.k. with those amounts. They should send in their plans for the wells.
[Quoted text hidden]

–

Dustin K. Doucet
Petroleum Engineer
Division of Oil, Gas and Mining
1594 West North Temple, Ste 1210
Salt Lake City, Utah 84116
801.538.5281 (ofc)
801.359.3940 (fax)

web: www.ogm.utah.gov

Berry Petroleum Company, LLC

June 14, 2017

Mr. Dustin Doucet
State of Utah – DNR
Division of Oil, Gas and Mining
1594 West North Temple
Salt Lake City, Utah 84116

Re: Extended Shut-in and Temporary Abandoned requirements for eight (8) Fee Leases

Dear Mr. Doucet:

Berry Petroleum Company, LLC., and Linn Operating, LLC. emerged from bankruptcy as two standalone companies on May 1, 2017. Due to this recent action, Berry Petroleum Company, LLC. is currently evaluating the potential for eight (8) wells, and respectfully submits the following plans to bring these wells into compliance as follows:

Scofield Thorpe 22-41X Rig Skid
API # 43-007-30890
Berry Petroleum Company, LLC is currently evaluating the entire Scofield acreage block for potential and would like to respectfully request a 90-day shut- in extension to September 15, 2017. After the well review is complete, Berry Petroleum Company, LLC. will follow up with 1 of the 2 following procedures prior to August 15, 2017: (1) File for approval to PA well with a completion date prior to October 1, 2017, or (2) Berry will commit to return the well to production prior to June 1, 2018. The roads to this well are not open in the winter, so this well is not operated during winter months.

Scofield Thorpe 35-13
API # 43-007-30991
Berry Petroleum Company, LLC is currently evaluating the entire Scofield acreage block for potential and would like to respectfully request a 90-day shut- in extension to September 15, 2017. After the well review is complete, Berry Petroleum Company, LLC. will follow up with 1 of the 2 following procedures prior to August 15, 2017: (1) File for approval to PA well with a completion date prior to October 1, 2017, or (2) Berry will commit to return the well to production prior to June 1, 2018. The roads to this well are not open in the winter, so this well is not operated during winter months.

Scofield Thorpe 23-31
API # 43-007-31001
Berry Petroleum Company, LLC is currently evaluating the entire Scofield acreage block for potential and would like to respectfully request a 90-day shut- in extension to September 15, 2017. After the well review is complete, Berry Petroleum Company, LLC. will follow up with 1 of the 2 following procedures prior to August 15, 2017: (1) File for approval to PA well with a completion date prior to October 1, 2017, or (2) Berry will commit to return the well to production prior to June 1, 2018. The roads to this well are not open in the winter, so this well is not operated during winter months.

SWF Fee 13-10D-54
API# 43-013-50892
Berry Petroleum Company, LLC proposes to Plug and Abandon in Q3 of 2017. We will be submitting sundry/procedures for approval prior to September 15, 2017. Due to this, Berry Petroleum Company, LLC respectfully requests a 90-day shut-in extension to September 15, 2017.

Wilcox Fee 15-16-56
API # 43-013-50597

Berry Petroleum Company, LLC proposes to return this well to production prior to September 1, 2017, following the end of raptor stipulations in August 2017. Berry respectfully requests a shut-in extension to September 1 ,2017.

LC Fee 8-15D-56
API # 43-013-50597
Berry Petroleum Company, LLC proposes to complete this well in Q3 of 2017, following raptor stipulations in August 2017. Berry respectfully requests a shut-in extension to September 30, 2017.

CC Fee 7R-28-38
API# 43-013-51852
Plan to return to production in Q4 of 2017. Linn had submitted for a preconstruction permit with UDAQ to operate well below flaring limits, and we are currently transferring this documentation to Berry Petroleum Company, LLC. Due to this, Berry respectfully requests a 6-month Temporary Abandonment extension thru December 31, 2017.

Taylor Fee 7-14-56
API# 43-013-33140
Berry Petroleum Company, LLC proposes to return this well to production prior to July 15, 2017, and respectfully requests a shut-in extension to July 15, 2017.

Sincerely,

Andrea Gurr
Regulatory Specialist 2
4028 W. 4000 S
Roosevelt, UT 84066
T: 435.722.0065
C. 435.823.1846
ang@bry.com

LINN Energy

Schematic - Current

Well Name: SCOFIELD THORPE 22-41X RIG SKID

API/UWI	Field Name	County	State/Province	Section	Township	Range	Survey	Block
43007308900000	UNTA - AREA A - SCOFIELD	Carbon	UT	22	012-S	007-E		

Ground Elevation (ft)	Orig KB Elev (ft)	KB-Grd (ft)	Initial Spud Date	Rig Release Date	TD Date	Latitude (°)	Longitude (°)	Operated?
8,457.00	8,472.00	15.00	9/24/2002	11/28/2002	11/24/2002	39° 46' 40.659" N	111° 7' 11.829" W	Yes

Most Recent Job

Job Category	Primary Job Type	Secondary Job Type	Start Date	End Date
Workover/Maint	Tubing	Repair / Replace	9/11/2007	9/13/2007

TD: 6,247.0

Vertical - Original Hole, 5/3/2017 10:09:24 AM

MD (ftKB)	Zones	Zone Depth
4.9		
15.1		
35.1		
53.1		
83.0		
1,128.0		
1,144.0		
1,878.0		
2,628.0		
2,857.0		
2,881.9		
5,497.0		
5,596.1		
5,598.4		
5,599.4		
5,611.9		
5,618.1		
5,631.2		
5,631.9		
5,716.9		
5,989.5		
5,989.8		
5,995.1		
6,003.9		
6,007.9		
6,013.1		
6,020.0		
6,023.0		
6,035.1		
6,055.1		
6,071.9		
6,075.1		
6,078.1		
6,087.9		
6,154.9		
6,245.1		
6,247.0		

Vertical schematic (actual)

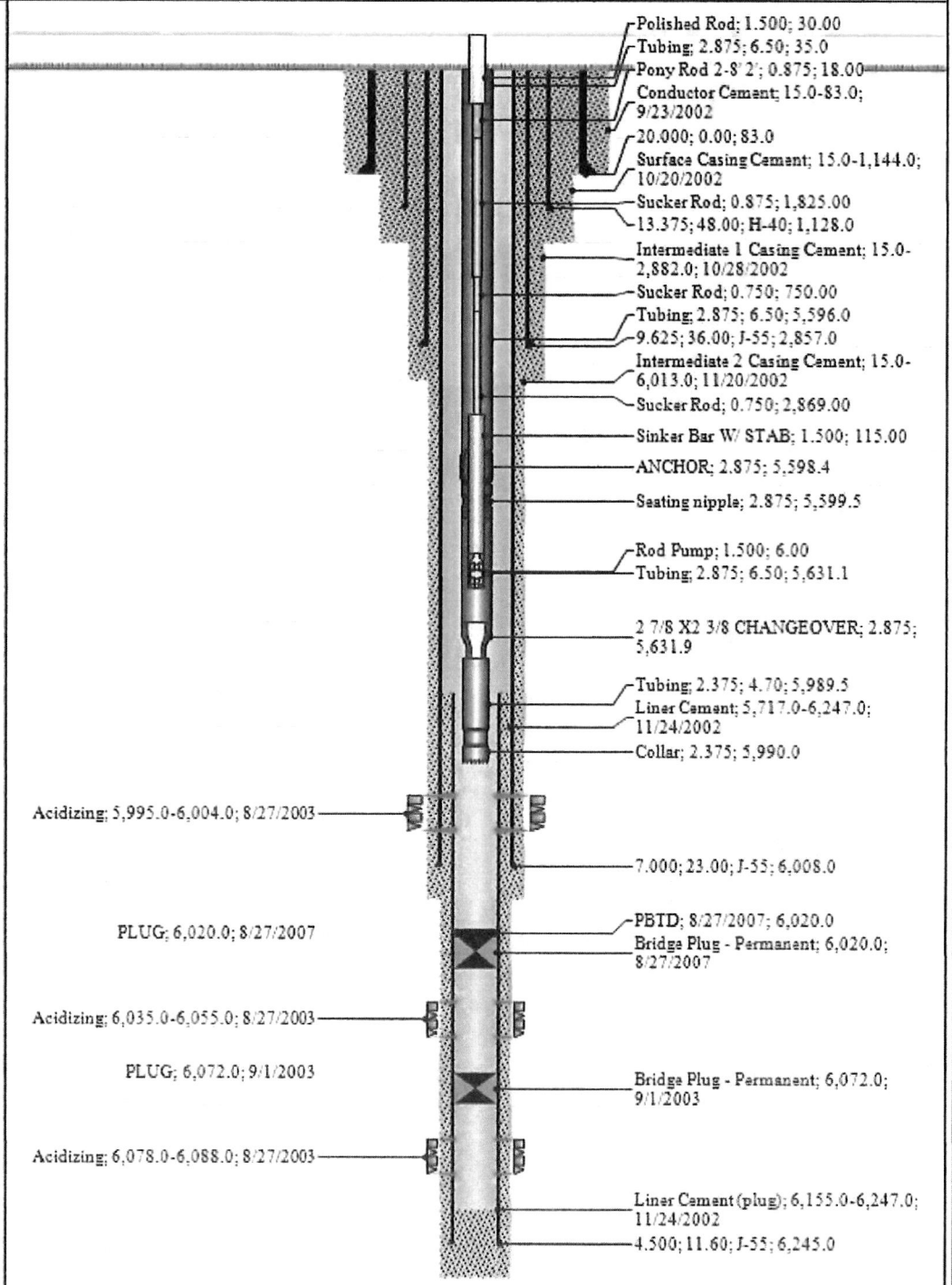

LINN Energy

Schematic - Current

Well Name: SCOFIELD-THORPE 35-13

API/UWI	Field Name	County	State/Province	Section	Township	Range	Survey	Block
43007309910000	UNTA - AREA A - SCOFIELD	Carbon	UT	35	012-S	007-E		

Ground Elevation (ft)	Orig KB Elev (ft)	KB-Grd (ft)	Initial Spud Date	Rig Release Date	TD Date	Latitude (°)	Longitude (°)	Operated?
9,018.00	9,032.00	14.00	7/30/2005	8/31/2005	8/25/2005	39° 44' 8.922" N	111° 6' 18.95" W	Yes

Most Recent Job

Job Category	Primary Job Type	Secondary Job Type	Start Date	End Date
Workover/Maint	Swabbing	Swabbing	11/8/2010	11/10/2010

TD: 7,045.0

Vertical - Original Hole, 5/3/2017 10:14:14 AM

MD (ftKB)	Zones	Zone Depth
3.9		
13.5		
14.1		
29.9		
94.2		
968.8		
970.5		
1,014.8		
1,016.1		
1,040.0		
1,981.0	GR(NEW)	1,981.0
2,629.9	MAHOGANY	2,630.0
3,679.1	TGR3	3,679.0
4,454.1	DC	4,454.0
4,879.9		
5,110.9	BLACK SH...	5,111.0
5,381.9	CASTLE PE...	5,382.0
5,790.0	UTELAND	5,790.0
6,006.9	WASATCH	6,007.0
6,299.9	FERRON	6,300.0
6,318.9		
6,334.0		
6,349.1		
6,350.1		
6,351.0		
6,351.7		
6,371.1		
6,450.1		
6,454.1		
6,522.0		
6,567.9		
6,705.1		
6,717.8		
6,859.9		
6,919.3		
6,920.6		
6,965.9		
6,966.9		
7,044.9		

Vertical schematic (actual)

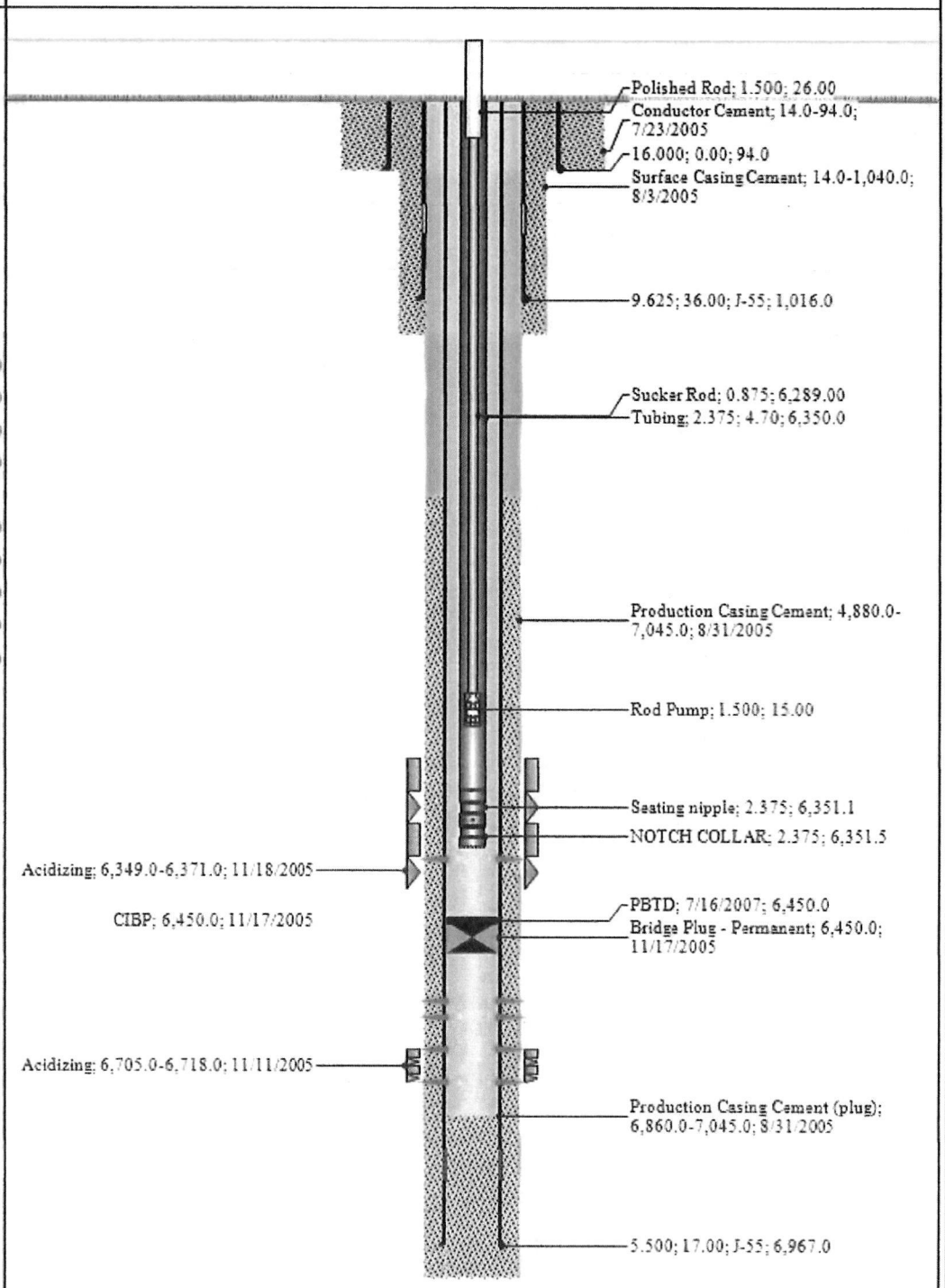

LINN Energy

Schematic - Current

Well Name: SCOFIELD-THORPE 23-31

API/UWI	Field Name	County	State/Province	Section	Township	Range	Survey	Block
43007310010000	UNTA - AREA A - SCOFIELD	Carbon	UT	23	012-S	007-E		

Ground Elevation (ft)	Orig KB Elev (ft)	KB-Grd (ft)	Initial Spud Date	Rig Release Date	TD Date	Latitude (°)	Longitude (°)	Operated?
8,991.00	9,005.00	14.00	9/20/2005	12/21/2005	12/15/2005	39° 46' 39.388" N	111° 6' 38.25" W	Yes

Most Recent Job

Job Category	Primary Job Type	Secondary Job Type	Start Date	End Date
Completion	Initial Completion		1/5/2006	3/25/2006

TD: 7,200.0

Original Hole, 5/3/2017 10:14:56 AM

MD (ftKB)	Zones	Zone Depth
4		
14		
26		
94		
1,039		
1,050		
1,078		
1,360		
1,422		
1,496		
1,618		
1,931		
4,731		
6,335		
6,374	UPPER FER...	6,410.0
	MIDDLE FE...	6,588.0
	LOWER FE...	6,749.0

Vertical schematic (actual)

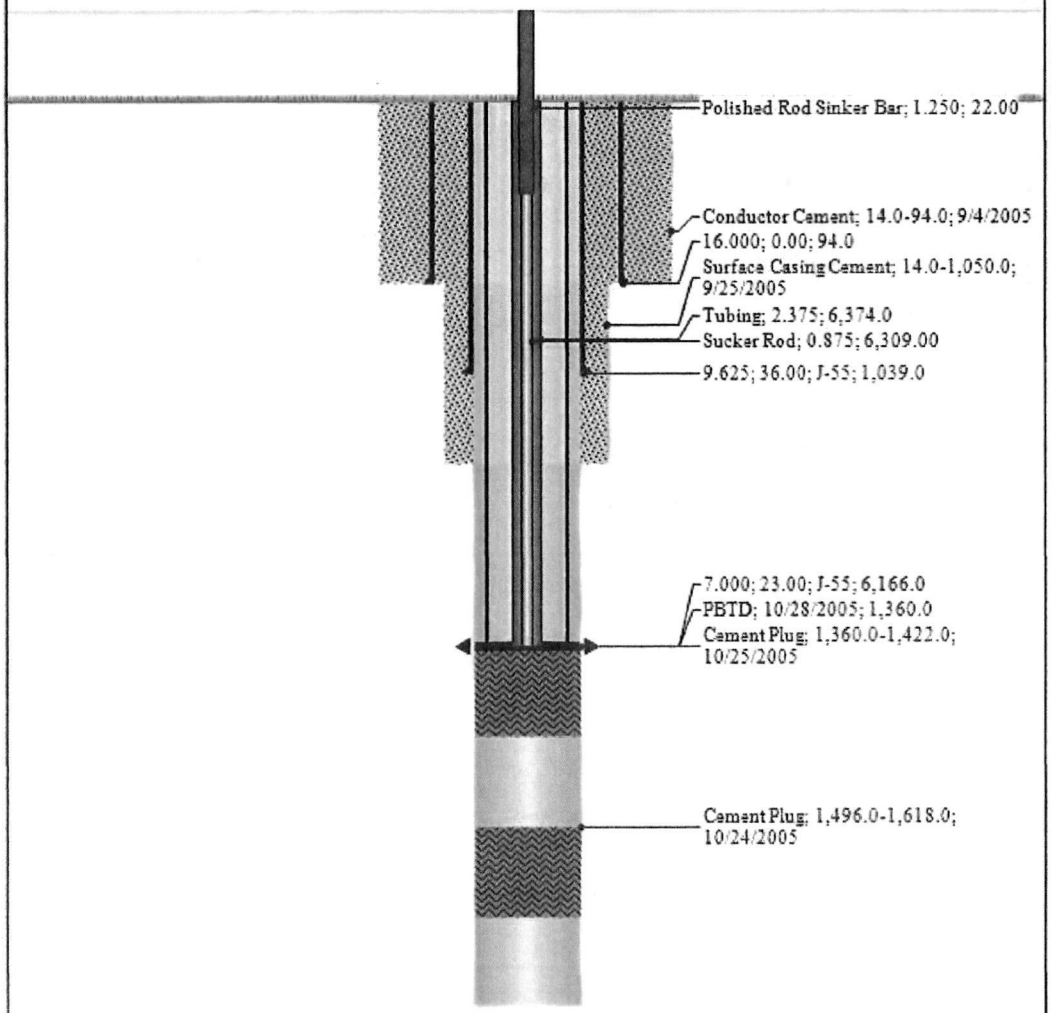

LINN Energy

Schematic - Current

Well Name: WILCOX FEE 15-16-56

API/UWI	Field Name	County	State/Province	Section	Township	Range	Survey	Block
43013331510000	UNTA / AREA A - LAKE CANYON	Duchesne	UT	16	006-S	006-W		

Ground Elevation (ft)	Orig KB Elev (ft)	KB-Grd (ft)	Initial Spud Date	Rig Release Date	TD Date	Latitude (°)	Longitude (°)	Operated?
6,612.00	6,626.00	14.00	8/17/2006	8/26/2006	8/25/2006	40° 2' 31.488" N	110° 33' 47.524" W	Yes

Most Recent Job

Job Category	Primary Job Type	Secondary Job Type	Start Date	End Date
Workover/Maint	Tubing	Repair/Replace	11/3/2007	11/5/2007

TD: 4,995.0

Vertical - Original Hole, 5/3/2017 10:15:44 AM

MD (ftKB)	Zones	Zone Depth
3.9		
14.1		
29.9		
357.9		
421.9		
961.9	GR	962.0
	Mahogany	1,549.0
1,555.1		
2,577.1	TGR3	2,577.0
3,200.1		
3,344.2		
	Douglas Creek	3,354.0
3,942.9		
3,996.1	Black Shale	3,996.0
	Castle Peak	4,283.0
4,345.5		
4,403.9		
4,536.1		
	Uteland Butte	4,634.0
4,654.9		
4,660.1		
4,835.6		
4,851.0		
	Wasatch	4,865.0
4,867.5		
4,901.2		
4,925.9		
4,935.0		
4,980.0		

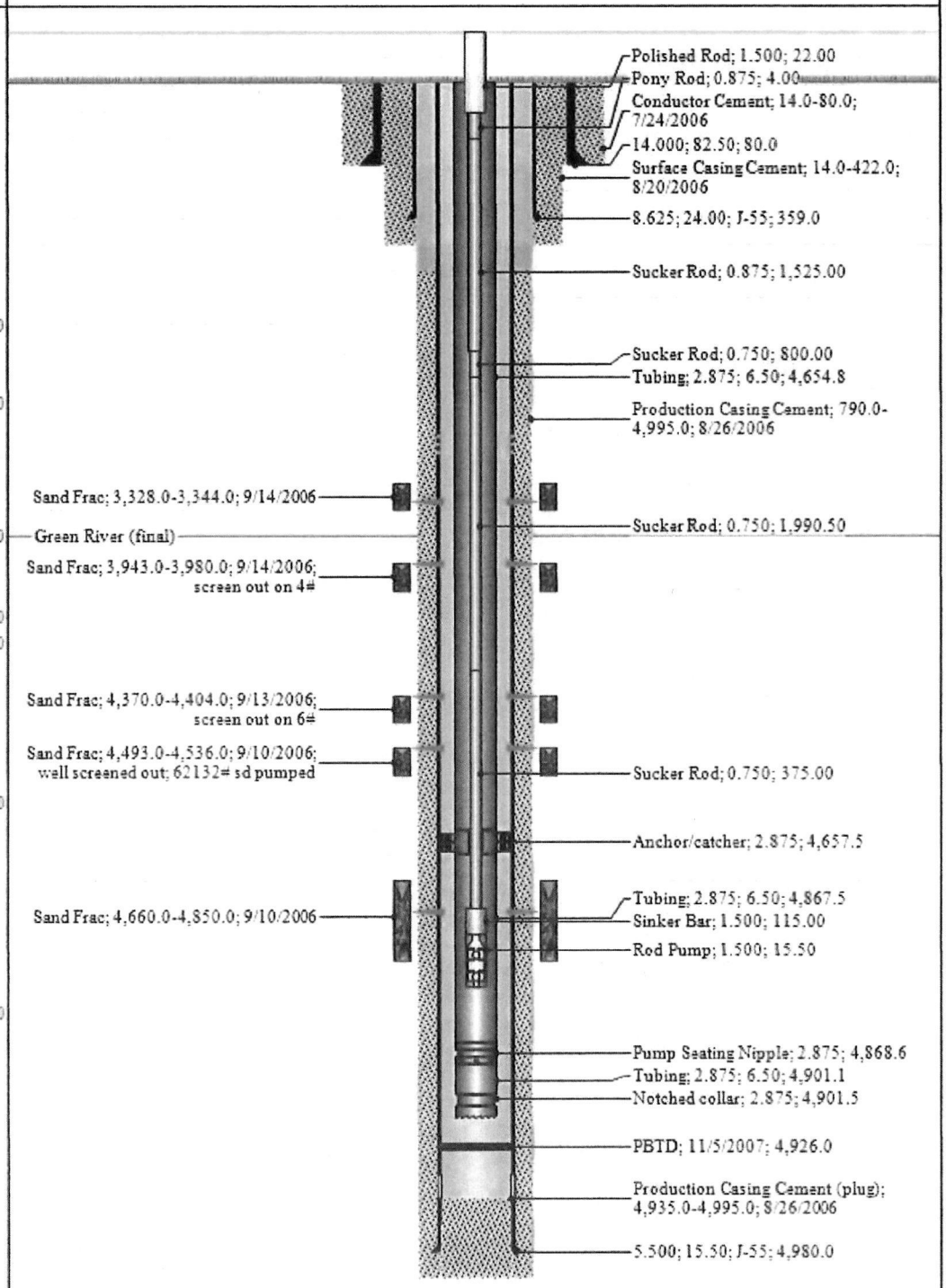

Schematic - Current

Well Name: LC FEE 8-15D-56

API/UWI	Field Name	County	State/Province	Section	Township	Range	Survey	Block
43013506970O	UNTA-AREA A-LAKE CANYON	Duchesne	UT	15	005-S	006-W		

Ground Elevation (ft)	Orig KB Elev (ft)	KB-Grd (ft)	Initial Spud Date	Rig Release Date	TD Date	Latitude (°)	Longitude (°)	Operated?
6,483.00	6,502.00	19.00	1/4/2015	1/16/2015	1/10/2015	40° 2' 55.076" N	110° 32' 43.157" W	Yes

Most Recent Job

Job Category	Primary Job Type	Secondary Job Type	Start Date	End Date
Completion	Initial Completion	AFE	1/23/2015	1/27/2015

TD: 6,256.0

Directional - Original Hole, 5/3/2017 10:16:27 AM

MD (ftKB)	Zones	Zone Depth
0.0		
19.0		
481.0		
615.8		
616.8		
659.1		
660.1		
974.1		
1,607.9		
1,860.6		
1,879.9		
2,759.8		
2,850.1		
2,860.6		
3,612.9		
4,298.9		
4,588.9		
4,945.9		
5,174.9		
5,518.7		
5,520.0		
5,520.3		
5,562.7		
5,564.0		
6,125.0		
6,174.9		
6,255.9		

Vertical schematic (actual)

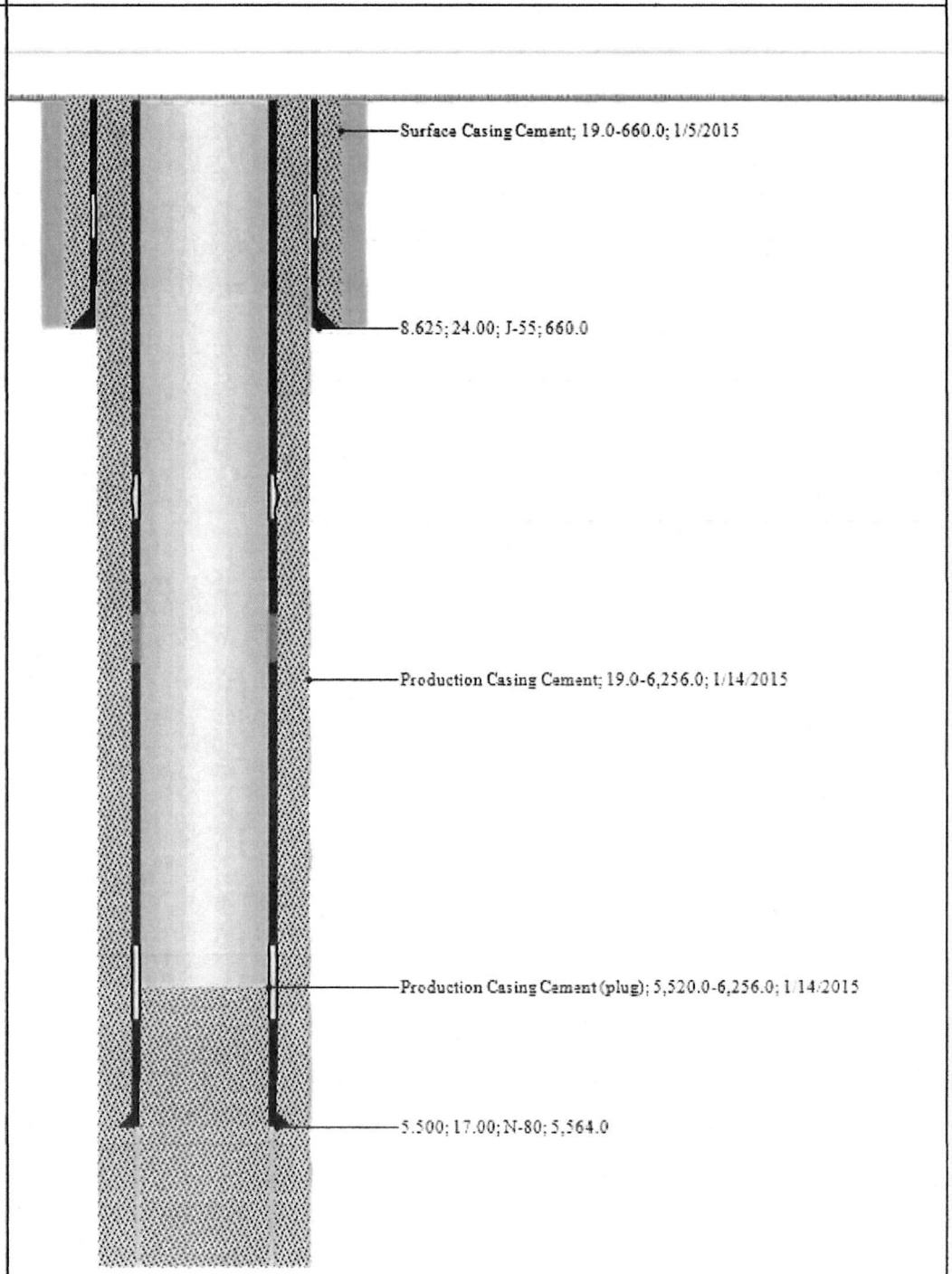

LINN Energy

Schematic - Current

Well Name: CC FEE 7R-28-38

API/UWI	Field Name	County	State/Province	Section	Township	Range	Survey	Block
43013518520000	UNTA - AREA A - CURRANT CREEK	Duchesne	UT					

Ground Elevation (ft)	Orig KB Elev (ft)	KB-Grd (ft)	Initial Spud Date	Rig Release Date	TD Date	Latitude (°)	Longitude (°)	Operated?
6,543.00	6,562.00	19.00	2/3/2013	3/24/2013	3/19/2013	40° 11' 34.505" N	110° 47' 21.343" W	Yes

Most Recent Job

Job Category	Primary Job Type	Secondary Job Type	Start Date	End Date
Workover/Maint	Artificial Lift	Repair/Replace Rod	3/4/2014	3/5/2014

TD: 11,382.0

Vertical - Original Hole, 5/3/2017 10:17:26 AM

MD (ftKB)	Zones	Zone Depth
25.3		
484.9		
1,540.0		
2,664.0	TOC	3,308.0
3,961.9	GR (Fouch...	4,140.0
4,868.1	Mahogany	4,868.0
7,454.1	TGR3 / Douglas Creek / Black Shale / Castle Peak / Wasatch	
8,657.2	CR2	
9,086.0	CR3	9,000.0
9,548.9	CR4	9,301.0
9,681.1	CR4A	9,607.0
9,742.8	CR5	9,743.0
9,818.9		
9,905.8	CR6	9,906.0
10,029.9		
10,297.9	CR7A	10,2...
10,578.1	Flatstaff	10,5...
10,588.9		
10,642.1		
10,659.1		
10,681.1		
10,794.0		
10,907.2		
10,942.9		
10,976.0		
11,005.9		
11,020.0		
11,051.8		
11,080.1		
11,310.4	North Horn	11,2...

Vertical schematic (actual)

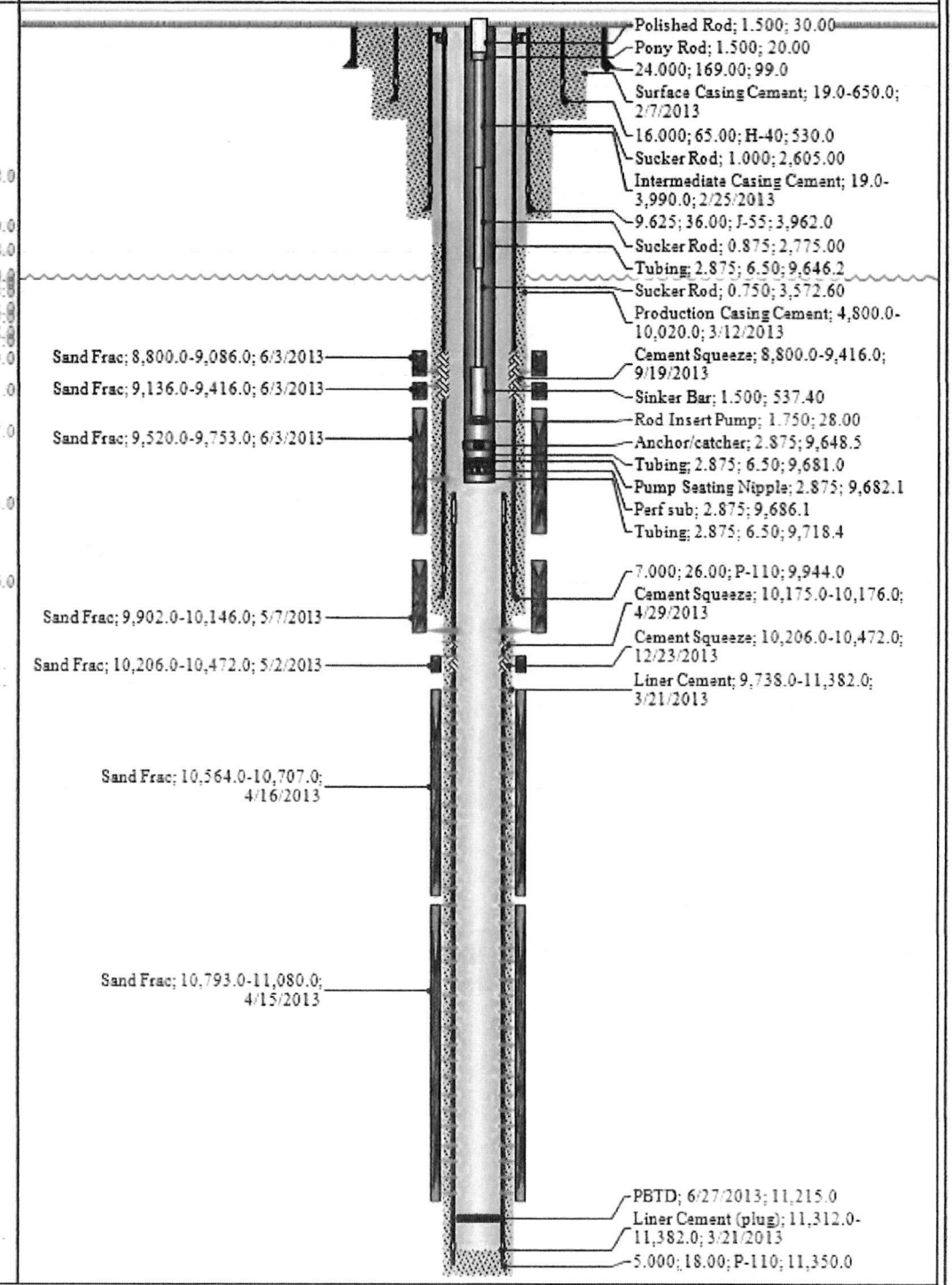

Schematic - Current

Well Name: TAYLOR FEE 7-14-56

API/UWI	Field Name	County	State/Province	Section	Township	Range	Survey	Block
43013331400000	UNTA-UINTA A - LAKE CANYON	Duchesne	UT	14	005-S	006-W		

Ground Elevation (ft)	Orig KB Elev (ft)	KB-Grd (ft)	Initial Spud Date	Rig Release Date	TD Date	Latitude (°)	Longitude (°)	Operated?
6,415.00	6,429.00	14.00	8/6/2006	8/15/2006	8/13/2006	40° 2' 52.606" N	110° 31' 36.911" W	Yes

Most Recent Job

Job Category	Primary Job Type	Secondary Job Type	Start Date	End Date
Workover/Maint	Tubing	Repair/Replace	6/22/2007	6/26/2007

TD: 5,020.0

Vertical - Original Hole, 5/3/2017 10:18:05 AM

MD (ftKB)	Zones	Zone Depth
-0.3		
14.1		
41.0		
400.9		
419.9		
1,590.9		
2,590.9		
	TGR3	2,595.0
3,073.5		
3,100.1	Garden Gulch	3,100.0
3,182.1		
	Douglas Creek	3,356.0
3,850.1		
4,003.9	Black Shale	4,004.0
	Castle Peak	4,288.0
4,294.0		
4,498.0		
4,574.1		
	Uteland Butte	4,646.0
4,648.0		
4,831.0		
4,841.9		
4,849.4		
	Wasatch	4,875.0
4,879.6		
4,943.9		
4,959.0		
4,960.6		
5,005.6		

Vertical schematic (actual)

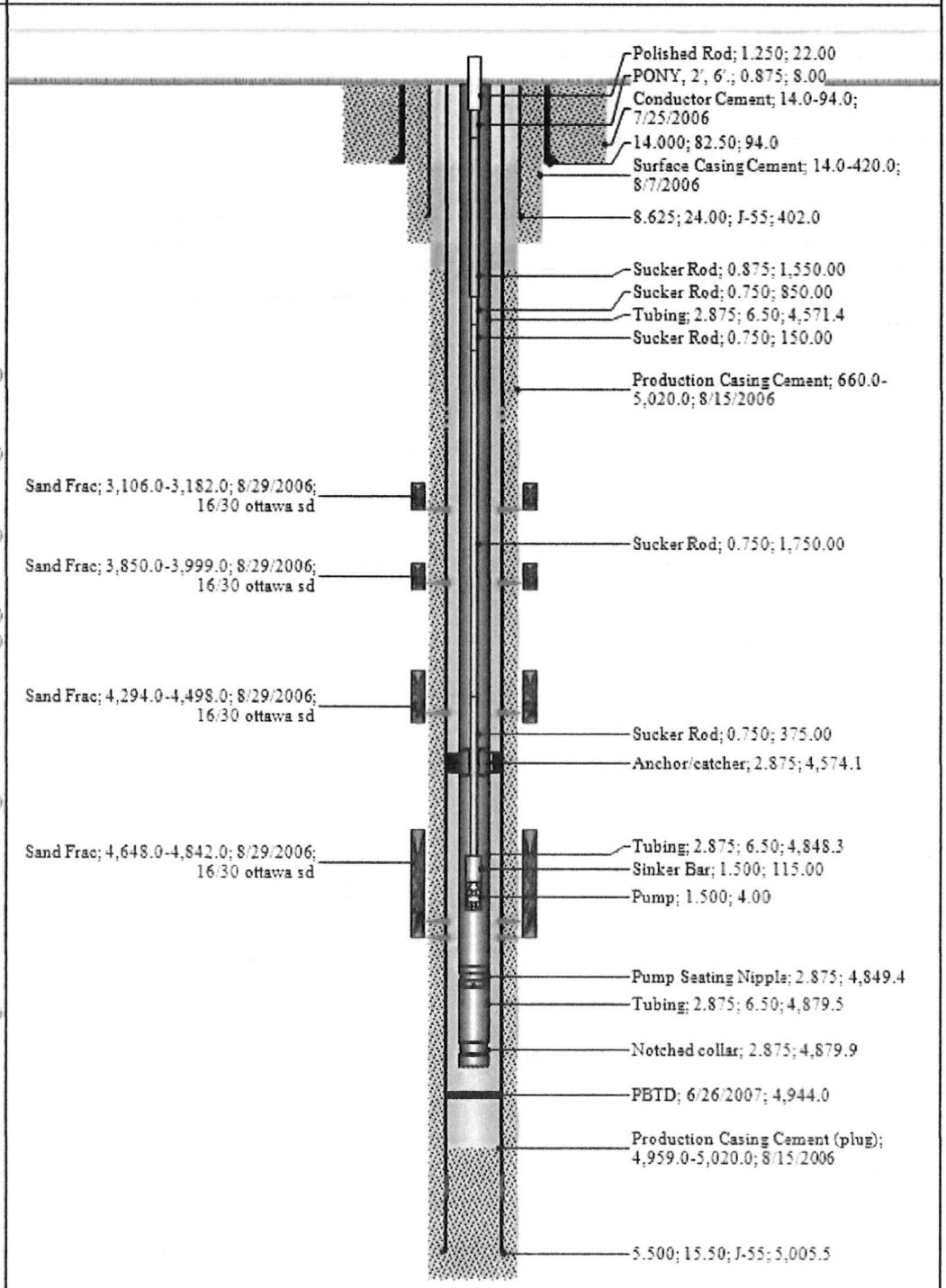

Rachel Medina <rachelmedina@utah.gov>

RE: Follow up to VM I left you re Berry Petroleum Company, LLC non compliant wells

3 messages

Gurr, Andrea N. <ang@bry.com> Thu, Jun 15, 2017 at 7:55 AM
To: Rachel Medina <rachelmedina@utah.gov>
Cc: "Hyder, John W." <jwh@bry.com>, "Rosenlieb, Trent R." <trr@bry.com>

Rachel,

Thank you for your suggestions yesterday– per your response below, Berry has chosen to submit a letter. Please submit the attached letter & wellbore diagrams re the 8 non-compliant wells for Dustin's review.

As I mentioned yesterday, Trent Rosenlieb @ Bakersfield office will be meeting with your team on Tuesday to discuss.

Thank you,

Berry Petroleum Company, LLC

Andrea Gurr

Regulatory Specialist II

4028 W. 4000 S.

Roosevelt, UT 84066

T: 435.722.0065

C. 435.823.1846

From: Rachel Medina [mailto:rachelmedina@utah.gov]
Sent: Wednesday, June 14, 2017 2:27 PM
To: Gurr, Andrea N. <ang@bry.com>
Cc: Hyder, John W. <jwh@bry.com>; Rosenlieb, Trent R. <trr@bry.com>
Subject: Re: Follow up to VM I left you re Berry Petroleum Company, LLC non compliant wells

Hi Andrea,

Berry's inactive status is due to the face that they currently have no open well-bores attached to the company. Once the operator change is complete that status will move to active.

As for the 8 non-compliance wells, you can either do a sundry for each wells, or you can do a letter covering each well individually. Dustin will want the plans to be detailed so please be sure to include as mush information as possible.

Either way (sundries or letter) you can email the plans to me for Dustin's review.

Thanks!

On Wed, Jun 14, 2017 at 10:25 AM, Gurr, Andrea N. <ang@bry.com> wrote:

Rachel,

I left you a voicemail, but wanted to follow up with an email to a question I have. Currently, Berry Petroleum Company, LLC operator status is inactive & being held up by 8 non-compliant wells. When Berry applied for active operator status it was believed to PA these wells, however, after a review has been conducted upper management has suggested alternate options. I would like to submit the new proposals for review, so my question to you is, should I prepare each proposal on a Form 9 (old school paper form), and send them to Dayne, Dustin, and yourself? Or should I submit electronically, selecting one of the Berry Petroleum options as operator in the E-permitting system?

Trent Rosenlieb will be traveling to Utah next week and plans to visit your office, so I would like to get these to your team and in review for discussion when he is there. Let me know your thoughts, I am happy to submit as you think will work best.

Thank you,

Andi

Berry Petroleum Company, LLC

Andrea Gurr

Regulatory Specialist II

4028 W. 4000 S.

Roosevelt, UT 84066

T: 435.722.0065

C. 435.823.1846

--

Rachel Medina

Division of Oil, Gas & Mining

Bonding Technician

801-538-5260

2017_06-15_UDOGM letter re 8 non compliant wells.pdf
2304K

Rachel Medina <rachelmedina@utah.gov> Thu, Jun 15, 2017 at 12:46 PM
To: Dustin Doucet <dustindoucet@utah.gov>

Here is Berry's shut in plans for the 8 non-compliance wells they will be taking, Can we complete the operator change?
[Quoted text hidden]

2017_06-15_UDOGM letter re 8 non compliant wells.pdf
2304K

Dustin Doucet <dustindoucet@utah.gov> Mon, Jun 19, 2017 at 3:43 PM
To: Rachel Medina <rachelmedina@utah.gov>

Looks o.k. on any they are proposing to plug by Sept 15th and decide not to to put online by 2018, they will need MIT to get an extension beyond sept
[Quoted text hidden]
--
Dustin K. Doucet
Petroleum Engineer
Division of Oil, Gas and Mining
1594 West North Temple, Ste 1210
Salt Lake City, Utah 84116
801.538.5281 (ofc)
801.359.3940 (fax)

web: www.ogm.utah.gov

STATE OF UTAH
DEPARTMENT OF NATURAL RESOURCES
DIVISION OF OIL, GAS AND MINING

UIC FORM 5

TRANSFER OF AUTHORITY TO INJECT

Well Name and Number	API Number
Z and T Ute Tribal 2-21	4301331280
Location of Well	Field or Unit Name
Footage : 759' FNL, 1978' FEL County : Duchesne	Brundage Canyon
QQ, Section, Township, Range: NWNE 21 5S 4W State : UTAH	Lease Designation and Number 14-20-H62-3414

EFFECTIVE DATE OF TRANSFER: 5/1/2017

CURRENT OPERATOR

Company: Linn Operating, LLC
Address: 600 Travis Street, Suite 1400
city Houston state TX zip 77002
Phone: (281) 840-4010
Comments:

Name: Debra Gordon
Signature: Debra Gordon
Title: Regulatory Manager
Date: 4-13-17

NEW OPERATOR

Company: Berry Petroleum Company, LLC
Address: 5201 Truxtun Avenue
city Bakersfield state CA zip 93309
Phone:
Comments:

Name: Arthur T. Smith
Signature: A. T. Smith
Title: Chief Executive Officer
Date: 18 April 2017

(This space for State use only)

Transfer approved by: Dan Jarvis
Title: Geologist
Approval Date: 5/25/17

Comments: EPA approval needed.

RECEIVED
MAY 03 2017
DIV. OF OIL, GAS & MINING

(5/2000)