Form 3160-3
(November 1983)
(formerly 9-331C)

CONFIDENTIAL

SUBMIT IN TRIPLICATE*
(Other instructions on reverse side)

Form approved.
Budget Bureau No. 1004-0136
Expires August 31, 1985

UNITED STATES
DEPARTMENT OF THE INTERIOR
BUREAU OF LAND MANAGEMENT

CONFIDENTIAL

APPLICATION FOR PERMIT TO DRILL, DEEPEN, OR PLUG BACK

5. LEASE DESIGNATION AND SERIAL NO.: UTU-73086

6. IF INDIAN, ALLOTTEE OR TRIBE NAME: n/a

7. UNIT AGREEMENT NAME: n/a

8. FARM OR LEASE NAME: Monument Federal

9. WELL NO.: #13-4-9-16

10. FIELD AND POOL, OR WILDCAT: Monument Butte/Green River

11. SEC., T., R., M., OR BLK. AND SURVEY OR AREA: Sec. 4, T9S, R16E

12. COUNTY OR PARISH: Duchesne

13. STATE: UTAH

1a. TYPE OF WORK: DRILL [X] DEEPEN [ ] PLUG BACK [ ]

b. TYPE OF WELL: OIL WELL [X] GAS WELL [ ] OTHER SINGLE ZONE [ ] MULTIPLE ZONE [ ]

2. NAME OF OPERATOR: Equitable Resources Energy Company

3. ADDRESS OF OPERATOR: 1601 Lewis Avenue; Billings, MT 59102 (406) 259-7860

4. LOCATION OF WELL (Report location clearly and in accordance with any State requirements.*)
At surface: NW SW Section 4, T9S, R16E
At proposed prod. zone: 2050' FSL, 660' FWL

14. DISTANCE IN MILES AND DIRECTION FROM NEAREST TOWN OR POST OFFICE*: From Myton, Utah approximately 10 miles SW

15. DISTANCE FROM PROPOSED* LOCATION TO NEAREST PROPERTY OR LEASE LINE, FT. (Also to nearest drlg. unit line, if any):

16. NO. OF ACRES IN LEASE:

17. NO. OF ACRES ASSIGNED TO THIS WELL:

18. DISTANCE FROM PROPOSED LOCATION* TO NEAREST WELL, DRILLING, COMPLETED, OR APPLIED FOR, ON THIS LEASE, FT.:

19. PROPOSED DEPTH: 6,000'

20. ROTARY OR CABLE TOOLS: Rotary

21. ELEVATIONS (Show whether DF, RT, GR, etc.): GL 5761.2'

22. APPROX. DATE WORK WILL START*:

23. PROPOSED CASING AND CEMENTING PROGRAM

SIZE OF HOLE	SIZE OF CASING	WEIGHT PER FOOT	SETTING DEPTH	QUANTITY OF CEMENT
See Drilling Program/Casing Design				

Operator plans to drill this well in accordance with the attached EXHIBITS. A listing of EXHIBITS is also attached.

SELF CERTIFICATION: I hereby certify that I am authorized, by proper lease interest owner, to conduct these operations associated with the application. Bond coverage pursuant to 43 CFR 3104 for lease activities is being provided by Equitable Resources Energy Company as principal and Safeco Insurance Company of America as surety under BLM Bond No. MT 0576 (Nationwide Oil & Gas Bond #5547188) who will be responsible for compliance with all of the terms and conditions of that portion of the lease associated with this application.

ORIGINAL: Bureau of Land Management (Vernal, UT)
COPY: Utah Division of Oil, Gas and Mining

RECEIVED
SEP 30 1996
DIV. OF OIL, GAS & MINING

IN ABOVE SPACE DESCRIBE PROPOSED PROGRAM: If proposal is to deepen or plug back, give data on present productive zone and proposed new productive zone. If proposal is to drill or deepen directionally, give pertinent data on subsurface locations and measured and true vertical depths. Give blowout preventer program, if any.

24.
SIGNED Bobbie Schuman — TITLE Regulatory and Environmental Specialist — DATE September 25, 1996
Bobbie Schuman

(This space for Federal or State office use)

PERMIT NO. 43-013-31716 — APPROVAL DATE

APPROVED BY J.A. Matthews — TITLE Petroleum Engineer — DATE 11/25/96

CONDITIONS OF APPROVAL, IF ANY:

*See Instructions On Reverse Side

Title 18 U.S.C. Section 1001, makes it a crime for any person knowingly and willfully to make to any department or agency of the United States any false, fictitious or fraudulent statements or representations as to any matter within its jurisdiction.

T9S, R16E, S.L.B.&M.

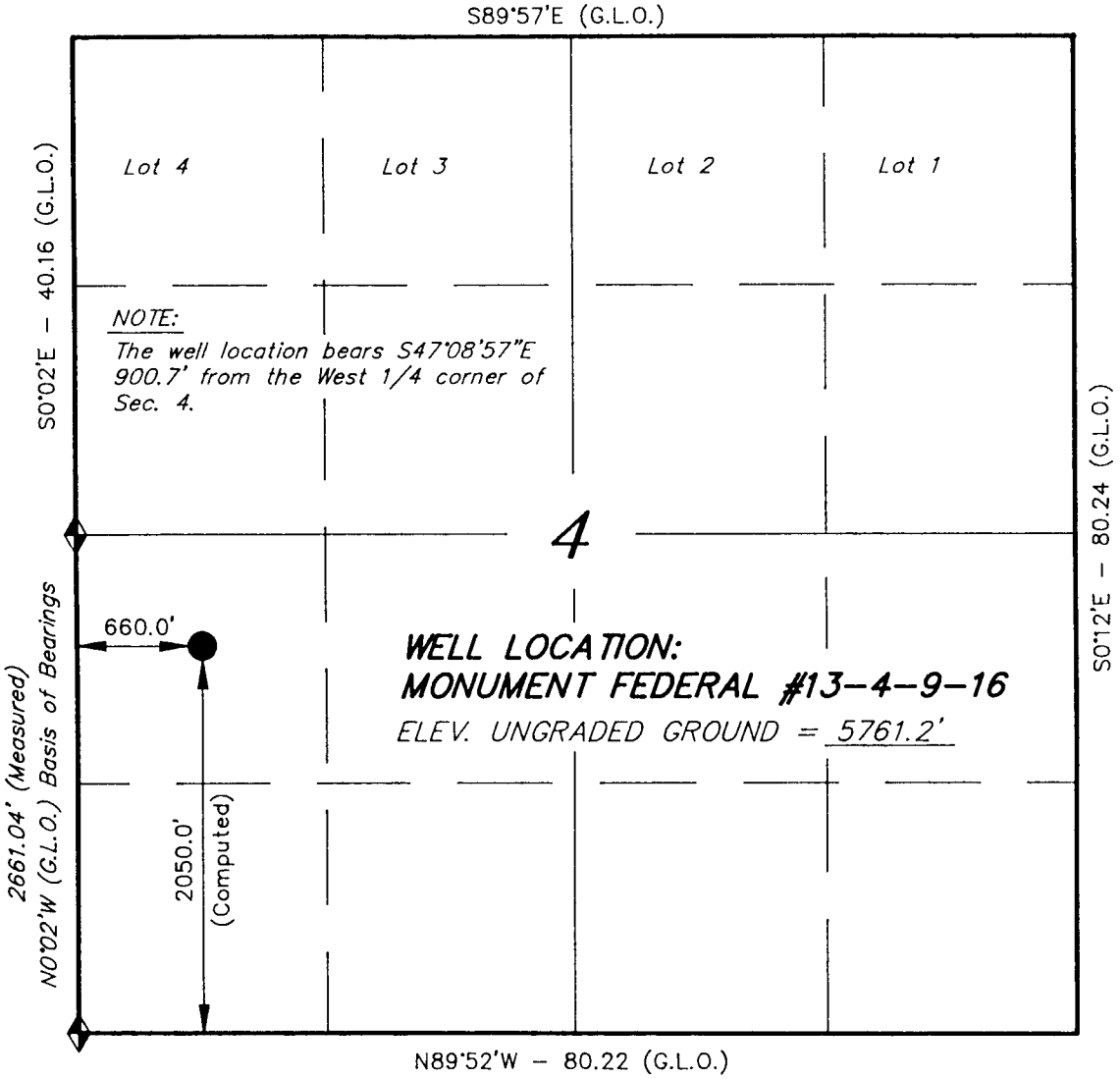

◆ = SECTION CORNERS LOCATED

BASIS OF ELEV; U.S.G.S. 7-1/2 min QUAD (MYTON SW)

EQUITABLE RESOURCES ENERGY CO.

WELL LOCATION, MONUMENT FEDERAL #13-4-9-16, LOCATED AS SHOWN IN THE NW 1/4 SW 1/4 OF SECTION 4, T9S, R16E, S.L.B.&M. DUCHESNE COUNTY, UTAH.

N

THIS IS TO CERTIFY THAT THE ABOVE PLAT WAS PREPARED FROM FIELD NOTES OF ACTUAL SURVEYS MADE BY ME OR UNDER MY SUPERVISION AND THAT THE SAME ARE TRUE AND CORRECT TO THE BEST OF MY KNOWLEDGE AND BELIEF.

REGISTERED LAND SURVEYOR
REGISTRATION No. 144102
STATE OF UTAH

REGISTERED LAND SURVEYOR GENE STEWART STATE OF UTAH

TRI STATE LAND SURVEYING & CONSULTING
38 WEST 100 NORTH – VERNAL, UTAH 84078
(801) 781-2501

SCALE: 1" = 1000'	SURVEYED BY: G.S.
DATE: 9-8-96	WEATHER: WARM
NOTES:	FILE #

CONFIDENTIAL

AS OPERATOR, WE HEREBY REQUEST THAT THE STATUS OF THIS WELL BE HELD TIGHT FOR THE MAXIMUM PERIOD ALLOWED BY FEDERAL AND STATE REGULATIONS.

Equitable Resources Energy Company
Western Region
1601 Lewis Avenue
Billings, MT 59102
(406) 259-7860
FAX: (406) 245-1361

EXHIBITS

A PROPOSED DRILLING PROGRAM

B PROPOSED SURFACE USE PROGRAM

C GEOLOGIC PROGNOSIS

D DRILLING PROGRAM/CASING DESIGN/WELLBORE DIAGRAM

E HAZMAT DECLARATION

F EXISTING & PLANNED ACCESS ROADS (MAPS A & B)

G WELLSITE LAYOUT

H BOPE SCHEMATIC

I EXISTING ROADS (MAP C)

J PROPOSED PRODUCTION FACILITY DIAGRAM

K SURVEY PLAT

L LAYOUT/CUT & FILL DIAGRAM

M GAS GATHERING PIPELINE ROW APPLICATION

9/25/96

PROPOSED DRILLING PROGRAM

EQUITABLE RESOURCES ENERGY COMPANY
Western Region
Monument Federal #13-4-9-16
NW SW Section 4, T9S, R16E
Duchesne County, Utah

In accordance with requirements outlined in 43 CFR 3162-3.1 (d):

1. ESTIMATED IMPORTANT GEOLOGICAL MARKERS:

   See Geologic Prognosis (EXHIBIT "C")

2. ESTIMATED DEPTHS OF ANTICIPATED OIL, GAS OR WATER:

   See Geologic Prognosis (EXHIBIT "C")

3. OPERATOR'S MINIMUM SPECIFICATIONS FOR PRESSURE CONTROL:

   a. EXHIBIT "H" is a schematic of the BOP equipment and choke manifold. A 2M system will be used. The BOPE will be installed after setting 8-5/8" casing at 260'. The blind rams and pipe rams will be tested to 1500 psi. Pipe rams will be operationally checked each 24-hour period and blind rams each time pipe is pulled out of the hole.

   b. The BOPE will be tested to 1500 psi when initially installed, whenever any seal subject to test pressure is broken, and following related repairs. The pipe and blind rams will be activated at least weekly and on every trip the pipe and blind rams will be activated.

   c. An accumulator of sufficient capacity to open the hydraulically-controlled choke valve lines (if so equipped), close all rams, and retain a minimum of 200 psi above precharge on the closing manifold without the use of the closing unit pumps will be installed during the drilling of this well.

   d. An upper kelly cock will be used during the drilling of this well.

   e. Visual mud monitoring equipment will be used to detect volume changes indicating loss or gain in circulating fluid volume.

   f. Sufficient quantities of mud materials will be maintained or readily accessible for the purpose of assuring well control.

4. PROPOSED CASING AND CEMENTING PROGRAM:

a. Surface casing will be set in the Uinta formation to approximately 260' and cemented to surface.

b. All potentially productive hydrocarbon zones will be isolated.

c. Casing designs are based on factors of burst: 1.00, collapse: 1.125, and joint strength: 1.8.

d. All casing strings will be pressure tested to 0.22 psi/ft. of casing string length or 1500 psi whichever is greater (not to exceed 70% of yield).

e. For details of casing, cement program, drilling fluid program, and proposed mud program, see the following attachment:

Drilling Program/Casing Design (EXHIBIT "D")

5. HAZARDOUS PRESSURES, TEMPERATURES, FLUIDS/GASSES EXPECTED:

a. Expected bottom hole temperature is 125 degrees F. Expected bottom hole pressure is 1500 psi.

b. No abnormal pressures or temperatures have been noted or reported in wells drilled to the Green River formation in this area.

c. No dangerous levels of hydrogen sulfide, hazardous fluids, or gasses have been found, reported, or known to exist at the depth to be drilled in this well, in this area.

6. ANTICIPATED STARTING DATE AND DURATION OF OPERATIONS:

a. The drilling operations for this well will begin as soon after APD approval as possible.

b. These drilling operations should be completed within 12 days after spudding the well depending on weather and hole conditions.

c. If the well is productive, a sundry notice and plat showing exact installed facilities will be submitted.

d. If this well is non-productive, a sundry notice will be filed with the BLM District Office within 30 days following completion of the well for abandonment.

7. OTHER

a. Operator requests a variance to regulations requiring a straight run blooie line.

b. Operator requests a variance to regulations requiring an automatic ignitor or continuous pilot light on the blooie line.

c. When running 5-1/2" production casing we will install 5-1/2" pipe rams and are hereby requesting a variance on testing. We request not to test.

B

Multi-Point Surface Use and Operations Plan

EQUITABLE RESOURCES ENERGY COMPANY
MONUMENT FEDERAL #13-4-9-16
NW SW SECTION 4, T9S, R16E
DUCHESNE COUNTY, UTAH

1. Existing Roads: Refer to Maps "A" & "B" (shown in RED)

A. The proposed well site is staked and four reference stakes are present. 200' & 250' West and 175' & 200' North.

B. The Monument Federal #13-4-9-16 is located 10 miles Southwest of Myton Utah in the NW1/4 SW1/4 Section 4, T9S, R16E, SLB&M, Duchesne County, Utah. To reach the 13-4-9-16, proceed West from Myton, Utah along U.S. Highway 40 for 1.6 miles to the junction of this highway and Sand Wash road; Proceed South along the Sand Wash road approximately 6.3 miles to a road intersection, turn right and continue 5.4 miles to a road intersection. Turn left and proceed 0.2 mile the proposed access road sign. Follow flags 0.2 mile to location.

C. Access roads - refer to Maps "A" and "B".

D. Access roads within a one-mile radius - refer to map "B".

E. The existing roads will be maintained in the same or better condition as existed prior to the commencement of operations and said maintenance will continue until final abandonment and reclamation of the well location.

2. Planned Access Roads: Refer to Map "B"

Approximately 0.2 mile of new road construction will be required for access to the proposed well location.

A. Width - maximum 30-foot overall right-of-way with an 18-foot road running surface, crowned & ditched and/or sloped and dipped.

B. Construction standard - the access road will be constructed so as to conform to the standards outlined in the Bureau of Land Management and Forest Service publication: Surface Operating Standards for Oil and Gas Exploration and Development. (1989)

The road will be constructed to meet the standards of the anticipated traffic flow and all-weather requirements. Construction will include ditching, draining, crowning, and capping or sloping and dipping the roadbed as necessary to provide a well constructed and safe road. Prior to construction/upgrading, the roadway shall be cleared of any snow cover and allowed to dry completely. Traveling off of the thirty (30) foot right-of-way will not be allowed.

Road drainage crossings shall be of the typical dry creek drainage crossing type. Crossing shall be designed so they will not cause siltation or the accumulation of debris in the drainage crossing nor shall the drainages be blocked by the roadbed. Erosion of drainage ditches by runoff water shall be prevented by diverting water off at frequent intervals by means of cutouts.

Upgrading shall not be allowed during muddy conditions.

Should mud holes develop, they shall be filled in and detours around them avoided.

C. Maximum grade - Less than 8%

D. Turnouts - no turnouts will be required on this access road.

E. Drainage design - the access road will be crowned and ditched or sloped and dipped, and water turnouts installed as necessary to provide for proper drainage along the access road route.

F. Culverts, cuts and fills - none.

G. Surface materials - all construction materials will be native material taken from onsite.

H. Gates, cattleguards or fence cuts - none required.

I. Road maintenance - during both the drilling and production phase of operations, the road surface and shoulders will be kept in a safe and useable condition and will be maintained in accordance with the original construction standards. All drainage ditches and culverts

will be kept clear and free-flowing, and will also be maintained in accordance with the original construction standards. The access road right-of-way will be kept free of trash during operations.

J. The proposed access road has been centerline flagged.

K. If a right-of-way is required please consider this APD the application for said right-of-way.

3. Location of Existing Wells Within a One-Mile Radius:

Please Refer to Map "C"

A. Water wells - none known.
B. Abandoned wells - see Map "C"
C. Temporarily abandoned wells - none known.
D. Disposal wells - none known.
E. Drilling wells - none known.
F. Producing wells - see Map "C".
G. Shut-in wells - none known.
H. Injection wells - none known.
I. Monitoring wells - none known.

4. Location of Existing and/or Proposed Facilities Owned by Equitable Resources Energy Company Within a One-Mile Radius:

A. Existing

1. Tank batteries - see Map "C".
2. Production facilities - see Map "C".
3. Oil gathering lines - none.
4. Gas gathering lines - see Map "C".

B. New Facilities Contemplated

1. All production facilities will be located on the disturbed portion of the well pad and at a minimum of twenty-five (25) feet from the toe of the backslope or toe of the fill slope.

2. The production facilities will consist primarily of a pumping unit, Two tanks and an emergency pit. A diagram showing the proposed production facility layout is included in this APD.

3. Production facilities will be accommodated on the existing well pad. Construction materials required for installation of the production facilities will be obtained from the site; any additional materials required will be purchased from a local supplier having

a permitted (private) source of materials within the area.

A dike will be constructed completely around those production facilities which contain fluids (i.e. production tanks, produced water tanks and/or heater treater). These dikes will be constructed of compacted subsoil, be impervious, hold 100% of the capacity of the largest tank, and be independent of the back cut.

4. All permanent (onsite for six months or longer) above the ground structures constructed or installed including pumping units) will be painted Desert Brown. All production facilities will be painted within six (6) months of installation. Facilities required to comply with Occupational Health and Safety Act Rules and Regulations will be excluded from this painting requirement.

C. The production (emergency) pit will be 12'x12' and will be fenced. Said fence will be maintained in good condition.

D. During drilling and subsequent operations, all equipment and vehicles will be confined to the access road right-of-way and any additional areas as specified in the approved Application for Permit to Drill.

E. Reclamation of disturbed areas no longer needed for operation will accomplished by grading, leveling and seeding as recommended by the Bureau of Land Management.

For Pipeline:

F. Any proposed pipelines will be submitted to the authorized officer Via Sundry Notice for approval of subsequent operations.

G. Equitable Resources Energy Company shall be responsible for road maintenance from the beginning to completion of operations.

5. Location and Type of Water Supply

A. Water to be used for the drilling of these wells will be hauled by truck over the roads described in item #1 and item #2, from a well owned by Owen Dale Anderson of Vernal Utah or from a spring owned by Joe Shields of Myton Utah. Source will be determined by sundry notice closer to the

beginning of drilling operations.

B. No water well will be drilled on this location.

6. Source of Construction Materials

A. No construction materials are needed for drilling operations. In the event of production, the small amount of gravel needed for facilities will be hauled in by truck from a local gravel pit over existing access roads to the area. No special access other than for drilling operations and pipeline construction is needed.

B. All access roads crossing Federal land are described under item #2, and shown on Map #A.

All construction material for these location sites and access roads shall be borrowed material accumulated during the construction of the location sites and access roads. No additional construction material from other sources is anticipated at this time, if in the future it is required the appropriate actions will be taken to acquire it from private sources.

C. All surface disturbance area is on B.L.M. lands.

D. There are no trees on this location.

7. Methods of Handling Waste Materials:

A. Cuttings - the cuttings will be deposited in the reserve pit.

B. Drilling fluids - including salts and chemicals will be contained in the reserve pit. Upon termination of drilling and completion operations, the liquid contents of the reserve pit will be removed and disposed of at an approved waste disposal facility within one hundred twenty (120) days after termination of drilling and completion activities.

In the event adverse weather conditions prevent removal of the fluids from the reserve pit within this time period, an extension may be granted by the Authorized Officer upon receipt of a written request from Equitable Resources Energy Company.

The reserve pit will be constructed so as not to leak, break, or allow discharge. The reserve pit will be lined with a 12 mil plastic reinforced liner.

C. Produced fluids - liquid hydrocarbons produced during completion operations will be placed in test tanks on the location. Produced waste water will be confined to a lined pit (reserve pit) or storage tank for a period not to exceed ninety (90) days after initial production. During the ninety (90) day period, in accordance with Onshore Order #7, an application for approval of a permanent disposal method and location, along with the required water analysis, shall be submitted for the Authorized Officer's approval. Failure to file an application within the time frame allowed will be considered an incidence of noncompliance.

Any spills of oil, gas, salt water or other noxious fluids will be immediately cleaned up and removed to an approved disposal site.

D. Sewage - self-contained, chemical toilets will be provided for human waste disposal. Upon completion of operations, or as needed, the toilet holding tanks will be pumped and the contents thereof disposed of in the nearest, approved, sewage disposal facility.

E. Garbage and other waste material - garbage, trash and other waste materials will be collected in a portable, self-contained and fully-enclosed trash cage during drilling and completion operations. Upon completion of operations (or as needed) the accumulated trash will be disposed of at an authorized sanitary landfill. No trash will be burned on location or placed in the reserve pit.

F. Immediately after removal of the drilling rig, all debris and other waste materials not contained in the trash cage will be cleaned up and removed from the well location. No adverse materials will be left on the location. Any open pits will be fenced during the drilling operation and the fencing will be maintained until such time as the pits are backfilled.

G. The reserve and/or production pit will be constructed on the existing location and will not be located in natural drainages where a flood hazard exists or surface runoff will destroy or damage the pit walls. All pits will be constructed so as not to leak, break, or allow the discharge of liquids therefrom.

8. Ancillary Facilities:

None anticipated.

9. Wellsite Layout:

A. Plat #1 shows the drill site layout as staked. Cross sections have been drafted to visualize the planned cuts and fills across the location. An average minimum of six (6) inches of topsoil will be stripped from the location (including areas of cut, fill, and/or subsoil storage) and stockpiled for future reclamation of the well site. Refer to Figure #1 for the location of the topsoil and subsoil stockpiles. The reserve pit will be on the North side of location. Access will be from the West between corner #2 and corner #3.

B. Plat #2 is a diagram showing the rig layout. No permanent living facilities are planned. There may be as many as three (3) trailers on location during drilling operation.

C. A completion rig will be moved onto location for completion operations after drilling operations have been completed and the drilling rig has been moved off location.

D. A diagram showing the proposed production facility layout is included in this APD.

E. The reserve pit will be constructed so as to be capable of holding 12,000 bbls. of fluid.

The reserve pit will be lined with a 12 mil plastic liner, it will be torn and perforated after the pit dries and before backfilling of the reserve pit.

F. Prior to the commencement of drilling operations, the reserve pit will be fenced on three (3) sides using 39-inch net wire with one strand of barbed wire on top of the net wire. The net wire will be no more than two inches above the ground. the barbed wire will be three inches above the net wire. total height of the fence will be at least 42-inches.

1. Corner posts shall be cemented and/or braced in such a manner to keep the fence tight at all times.

2. Standard steel, wood, or pipe posts shall be used between the corner braces. The maximum distance between any two (2) posts shall be no greater than sixteen (16) feet.

3. All wire shall be stretched, by using a stretching device, before it is attached to the corner posts.

The fourth side of the reserve pit will be fenced immediately upon removal of the drilling rig and the fencing will be maintained until the pit is backfilled.

G. Any hydrocarbons on the pit will be removed from the pit as soon as possible after completion operations are completed.

10. Plans for Reclamation of the Surface:

The B.L.M. will be contacted prior to commencement of any reclamation operations.

A. Production

1. Immediately upon well completion, the well location and surrounding area(s) will be cleared of all debris, materials, trash and junk not required for production.

2. Immediately upon well completion, any hydrocarbons on the pit shall be removed in accordance with 43 CFR 3162.7-1.

3. The plastic pit liner shall be torn and perforated before backfilling of the reserve pit.

4. Before any dirt work to restore the location takes place, the reserve pit will be completely dry and all cans, barrels, pipe, etc. will be removed.

   Other waste and spoil materials will be disposed of immediately upon completion of drilling and workover activities.

5. The reserve pit and that portion of the location and access road not needed for production facilities/operations will be reclaimed within one hundred twenty (120) days from the date of well completion, weather permitting.

6. If the well is a producer, Equitable Resources Energy Company will, upgrade and maintain access roads as necessary to prevent soil erosion, and accommodate year round traffic. Reshape areas unnecessary to operations, distribute topsoil, disk and seed all disturbed areas outside the work area according to the recommended seed mixture. Perennial vegetation must be established. Additional work shall be required in case of seeding failures, etc.

   If the well is abandoned/dry hole, Equitable Resources

Energy Company will, restore the access road and location to approximately the original contours. During reclamation of the site, push the fill material into cuts and up over the backslope. Leave no depressions that will trap water or form ponds. Distribute topsoil evenly over the location, and seed according to the above seed mixture. The access road and location shall be ripped or disked prior to seeding. Perennial vegetation must be established. Additional work shall be required in case of seeding failures, etc.

Seedbed will be prepared by disking, following the natural contours. Seed will be drilled on contours at a depth no greater than one-half inch (1/2"). In areas that cannot be drilled, seed will be broadcast at double the seeding rate and harrowed into soil. Certified seed will be used whenever available.

Fall seeding will be completed after September 15 and prior to prolonged ground frost. Spring seeding, to be effective, will be completed after the frost has left the ground and prior to May 15th.

7. Upon completion of backfilling, leveling and recontouring, the stockpiled topsoil will be evenly spread over the reclaimed area(s). Prior to reseeding, all disturbed surfaces will be scarified and left with a rough surface. No depressions will be left that would trap water and form ponds. All disturbed surfaces will be reseeded with the seed mixture stipulated by the B.L.M.

   Seed will be drilled on the contour to a approximate depth of one-half (1/2) inch. All seeding will be conducted after September 15 and prior to ground frost. Spring seeding will be done after the frost leaves the ground and no later than May 15. If the seeding is unsuccessful, Equitable Resources may be required to make subsequent seedings.

B. Dry Hole/Abandoned Location

1. On lands administered by the Bureau of Land Management, abandoned well sites, roads, or other disturbed areas will be restored to near their original condition. This procedure will include:

   (c) ensuring revegetation of the disturbed areas to the specifications of the Bureau of Land Management at the time of abandonment.

2. All disturbed surfaces will be recontoured to the approximate natural contours and reseeded according to BLM specifications. Reclamation of the well pad and access road will be performed as soon as practical after final abandonment and reseeding operations will be performed in the fall or spring following completion of reclamation operations.

11. Surface Ownership:

The well site and proposed access road are situated on surface lands administered by

Bureau of Land Management
Vernal District Office
Vernal, Utah

12. Other Information:

A. Topographic and geologic features of the area (reference Topographic Map #A) are:

The proposed drill site is located in the Monument Butte oil field, which lies in a large basin formed by the Uinta Mountains to the North and the Bookcliff Mountains to the South. The site is located approximately 15 miles Northwest of the Green River,which is the major drainage for this area, and approximately 13 miles Southwest of Myton Utah.

This basin floor is interlaced with numerous canyons and ridges formed by the non-perennial streams of the area. The sides of these canyons are steep and ledges formed in sandstone, conglomerate deposits and shale are common in this area.

The geologic structures that are visible in the area are of the Uinta formation (Eocene Epoch) tertiary period and the cobblestone and younger alluvial deposits from the Quaternary period.

The soils in the semi-arid area of the Williams Fork Formation (Upper Cretaceous) and Wasatch Formation (Eocene) consist of light brownish gray clay (OL) to sand soil (SM-ML) type with poorly graded gravels.

Outcrops of sandstone ledges, conglomerate deposits and shale are common in this area.

The topsoils in the area range from a sandy clay (SM-ML)

type soil to a clayey (OL) soil.

The majority of the numerous washes and draws in the area are of a non-perennial nature flowing during the early spring run-off and heavy rain storms of long duration which are rare as the normal annual rainfall in the area is only 8".

The flora of the area includes sagebrush, mountain mahogany, serviceberry, rabbit brush, greasewood, four-wing saltbush, Gambel scrub oak, willow, tamarack, shadscale, Spanish bayonet, indian rice grass, cheatgrass, wheatgrass, curly grass, crested wheatgrass, sweet clover, gum weed, foxtail, mustard, Canadian thistle, Russian thistle, Kochia, sunflowers and cacti.

The fauna of the area includes cattle, horses, elk, deer, coyotes, rabbits, rodents, lizards, bull snakes, rattle snakes, water snakes and horned toads. Birds of the area are ground sparrows, bluejays, bluebirds, magpies, ravens, rapters, morning doves, swallows, nighthawks, hummingbirds, and chukar.

B. The surface ownership is Federal. The surface use is grazing and petroleum production.

C. 1. The closest live water is the Green River which is approximately 15 miles Southwest of the proposed site.

2. There are no occupied dwellings in the immediate area

3. An archaeological report will be forwarded upon completion.

4. There are no reported restrictions or reservations noted on the oil and gas lease.

5. A silt catchment dam will not be required for this location.

13. Lessee's or Operator's Representative:

Equitable Resources Energy Company
1601 Lewis Avenue
P.O. Box 21017
Billings, Montana 59104
(8:00 a.m. to 5:00 p.m.)
(406)259-7860
FAX: (406)245-1361

Dave McCoskery, Home (406)248-3864

Dale Griffin, Home (303)824-3323

14. certification:

I hereby certify that I, or persons under my direct supervision, have inspected the proposed drillsite and access route; that I am familiar with the conditions which presently exist; that any statements made in this plan are, to the best of my knowledge, true and correct; and that the work associated with the operations proposed herein will be performed by Balcron Oil, a division of Equitable Resources Energy Company, and its contractors and subcontractors in conformity with this plan and the terms and conditions under which it is approved. This statement is subject to the provisions of 18 U.S.C. 1001 for the filing of a false statement.

September 27, 1996
Date

Bobbie Schuman
Bobbie Schuman
Coordinator of Environmental and Regulatory Affairs
Equitable Resources Energy Co.

EQUITABLE RESOURCES ENERGY COMPANY
WESTERN REGION

C

Well Prognosis

Well Name	Monument Fed. #13-4-9-16		Control Well
Location	NW/SW Sec. 4-T9S-R16E (2050 fsl, 660 fwl)	Operator	EREC
County/State	Duchesne County, Utah	Well Name	Castle Peak Federal 43-5
Field	Mon. Butte — Well Type: Dev.	Location	NE/SE Sec. 5-T9S-R16E
GL (Ung)	5761.2 — EST. KB: 5772 — Total Depth: 6000	KB	5796

Formation Tops	Prognosis		Sample Top		Control Well	High/Low		
Formation	Depth	Datum	Depth	Datum	Datum	Prog	Control	Deviation
UINTA	surface							
GREEN RIVER	1722	4050			4070			
HORSEBENCH SS	2338	3434			3454			
2ND GARDEN GULCH	4040	1732			1752			
Y-2(PAY)	4346	1426			1446			
Y-3 (PAY)	4410	1362			1382			
Y-4 (PAY)	4522	1250			1270			
YELLOW MARKER	4677	1095			1115			
DOUGLAS CREEK	4830	942			962			
R-1 (PAY)	4860	912			932			
R-2 (PAY)	5007	765			785			
2ND DOUGLAS CREEK	5068	704			724			
G-1U (PAY)	5078	694			714			
G-1L (PAY)	5122	650			670			
GREEN MARKER	5209	563			583			
G-3 (PAY)	5284	488			508			
G-6 (PAY)	5504	268			288			
CARBONATE MARKER	5724	48			68			
B-1 (PAY)	5738	34			54			
TD	6000							

Samples
50' FROM 1700' TO 4100'
20' FROM 4100' TO TD
5' THROUGH EXPECTED PAY
5' THROUGH DRILLING BREAKS

DST,s
DST #1 NONE
DST #2
DST #3
DST #4

Wellsite Geologist
Name:
From: To:
Address:
Phone # wk.
hm.
Fax #

Logs
DLL FROM SURF CSNG TO TD
LDT/CNL FROM 4000' TO TD

Cores
Core #1
Core #2
Core #3
Core #4

Mud Logger
Company:
From: 1700' To: TD
Type: 2-MAN
Logger:
Phone #
Fax #

Comments:

Report To: 1st Name: DAVE BICKERSTAFF Phone # (406)259-7860 wk. (406)245-2261 hm.
2nd Name: KEVEN REINSCHMIDT Phone # (406)259-7860 wk. (406)248-7026 hm.
Prepared By: BICKERSTAFF 9/10/96 Phone # wk. hm.

D

EQUITABLE RESOURCES
ENERGY COMPANY
WESTERN REGION

DRILLING PROGRAM

WELL NAME: Monument Federal #13-4-9-16 DATE:9-26-96
PROSPECT/FIELD: Monument Butte
LOCATION: NW/SW Section 4 Twn.9S Rge.16E
COUNTY: Duchesne
STATE: Utah

TOTAL DEPTH: 6000'

HOLE SIZE	INTERVAL
12 1/4"	Surface to 260'
7 7/8"	260' to 6000'

CASING	INTERVAL		CASING		
STRING TYPE	FROM	TO	SIZE	WEIGHT	GRADE
Surface Casing	0'	260'	8 5/8"	24	J55
Production Casing	0'	6000'	5 1/2"	15.50	K55

CEMENT PROGRAM

Surface Casing	150 sacks class"G" with 2% CaCl and 1/4 lb/sack Flocele. (Cement will be circulated to surface.)
Production Casing	205 sacks 28:72 Poz. (28% POZ: 72% Class"C") with 10% Gel, 6.0 lbs/sk KOL SEAL & ¼ pps Cello Flake.(Wt.=11.09 ppg,Yd =3.30 Cu.Ft/Sk Comp. Stght @ 72 Hrs=575) Tailed with 400 sacks 50:50 POZ(50% POZ: 50% Class"G") with 2% Gel, 0.3% FL-52, ¼ pps Cello Flakes & 2.0 pps KOL SEAL.(Wt.=14.30 ppg, Yd=1.25 Ft.Cu./Sk, Comp Strght @ 75 Hrs=2700) (Actual cement volumes to be calculated from caliper log with cement top at 2000')

PRELIMINARY DRILLING FLUID PROGRAM

TYPE	FROM	TO	WEIGHT	PLAS. VIS	YIELD POINT
Air and Air Mist	0'	260'	N.A.	N.A.	N.A.
Air/Air Mist/KCl wtr	260'	T.D.	8.7-8.9	N.A.	N.A.

COMMENTS

1.) No cores or tests are planned for this well.

D

EQUITABLE RESOURCES ENERGY COMPANY

Operator: EREC	Well Name: MF 13-4-9-16
Project ID:	Location: Duchesne / Utah

Design Parameters:

Mud weight (8.70 ppg)	: 0.452	psi/ft
Shut in surface pressure	: 2112	psi
Internal gradient (burst)	: 0.100	psi/ft
Annular gradient (burst)	: 0.000	psi/ft

Tensile load is determined using air weight
Service rating is "Sweet"

Design Factors:

Collapse	: 1.125	
Burst	: 1.00	
8 Round	: 1.80	(J)
Buttress	: 1.60	(J)
Body Yield	: 1.50	(B)

	Length (feet)	Size (in.)	Weight (lb/ft)	Grade	Joint	Depth (feet)	Drift (in.)	Cost
1	6,000	5-1/2"	15.50	K-55	ST&C	6,000	4.825	

	Collapse Load (psi)	Collapse Strgth (psi)	Collapse S.F.	Burst Load (psi)	Min Int Yield Strgth (psi)	Min Int Yield S.F.	Tension Load (kips)	Tension Strgth (kips)	Tension S.F.
1	2712	4040	1.490	2712	4810	1.77	93.00	222	2.39 J

Prepared by : *McCoskery, Billings, Montana*
Date : 09-26-1996
Remarks :
Design is for a Production string.
Minimum segment length for the 6,000 foot well is 1,500 feet.
The mud gradient and bottom hole pressures (for burst) are 0.452 psi/ft and 2,712 psi, respectively.

NOTE: The design factors used in this casing string design are as shown above. As a general guideline, Lone Star Steel recommends using minimum design factors of 1.125 - collapse (with evacuated casing), 1.0 - (uniaxial) burst, 1.8 - API 8rd tension, 1.6 - buttress tension, 1.5 - body yield tension, and 1.6 - EUE 8rd tension. Collapse strength under axial tension was calculated based on the Westcott, Dunlop and Kemler curve. Engineering responsibility for use of this design will be that of the purchaser.
Costs for this design are based on a 1987 pricing model. (Version 1.07)

EXHIBIT "E"

A. Hazardous chemicals 10,000 pounds of which will most likely be used, produced, stored, transported, or disposed of in association with the proposed action of drilling, completing, and producing this well:

We anticipate that none of the hazardous chemicals in quantities of 10,000 pounds or more will be associated with these operations.

B. Extremely hazardous substances threshold quantities which will be used, produced, stored, transported, or disposed of in association with the proposed action of drilling, completing, and producing this well:

We anticipate that none of the extremely hazardous substances in threshold quantities per 40 CFR 355 will be associated with these operations.

3/28/95
/rs

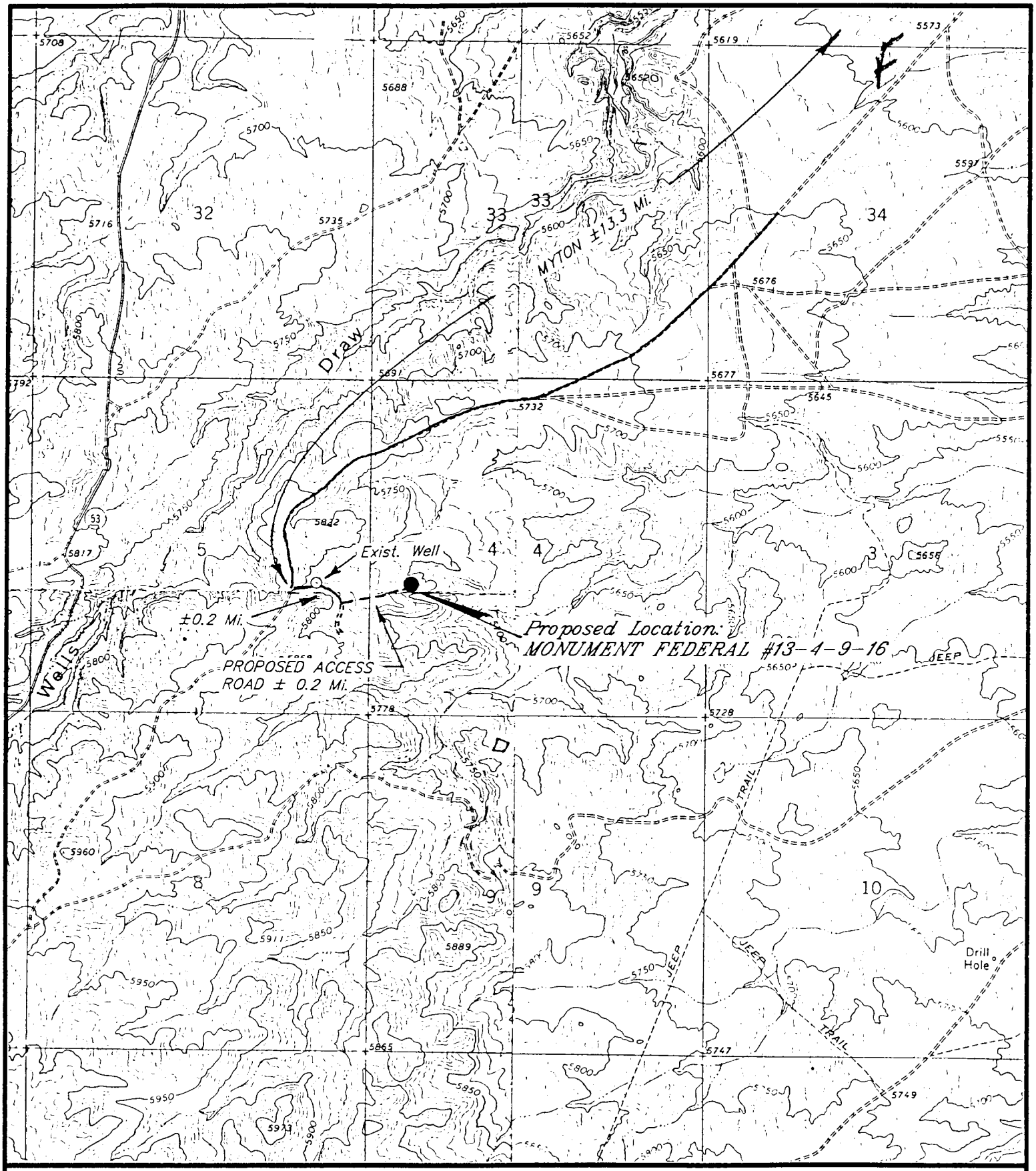

EQUITABLE RESOURCES CO.

MONUMENT FEDERAL #13-4-9-16
SEC. 4, T9S, R16E, S.L.B.&M.
TOPO "B"

N

SCALE: 1" = 2000'

Tri State
Land Surveying. Inc.
(801) 781-2501
38 WEST 100 NORTH VERNAL, UTAH 84078

Form 3160-5
(June 1990)

UNITED STATES
DEPARTMENT OF THE INTERIOR
BUREAU OF LAND MANAGEMENT

FORM APPROVED
Budget Bureau No. 1004-0135
Expires: March 31, 1993

SUNDRY NOTICES AND REPORTS ON WELLS

Do not use this form for proposals to drill or to deepen or reentry to a different reservoir.
Use "APPLICATION FOR PERMIT—" for such proposals

SUBMIT IN TRIPLICATE

5. Lease Designation and Serial No.: See attached listing

6. If Indian, Allottee or Tribe Name: n/a

7. If Unit or CA, Agreement Designation: n/a

1. Type of Well: [X] Oil Well [ ] Gas Well [ ] Other

8. Well Name and No.: See attached listing

2. Name of Operator: Equitable Resources Energy Company

9. API Well No.:

3. Address and Telephone No.: 1601 Lewis Avenue; Billings, MT 59102 (406) 259-7860

10. Field and Pool, or Exploratory Area: Monument Butte/Grn River

4. Location of Well (Footage, Sec., T., R., M., or Survey Description): See attached listing

11. County or Parish, State: See attached listing

12. CHECK APPROPRIATE BOX(s) TO INDICATE NATURE OF NOTICE, REPORT, OR OTHER DATA

TYPE OF SUBMISSION	TYPE OF ACTION	
[ ] Notice of Intent	[ ] Abandonment	[ ] Change of Plans
[X] Subsequent Report	[ ] Recompletion	[ ] New Construction
[ ] Final Abandonment Notice	[ ] Plugging Back	[ ] Non-Routine Fracturing
	[ ] Casing Repair	[ ] Water Shut-Off
	[ ] Altering Casing	[ ] Conversion to Injection
	[X] Other paleontology Reports	[ ] Dispose Water (Note: Report results of multiple completion on Well Completion or Recompletion Report and Log form.)

13. Describe Proposed or Completed Operations (Clearly state all pertinent details, and give pertinent dates, including estimated date of starting any proposed work. If well is directionally drilled, give subsurface locations and measured and true vertical depths for all markers and zones pertinent to this work.)*

Attached are te paleontology reports which were done on proposed wellsites, access routes, and gasline routes for the wells on the attached listing.

ORIGINAL: Bureau of Land Management (Vernal, UT)
COPY: Utah Division of Oil, Gas and Mining

RECEIVED
OCT 2 2 1996
DIV OF OIL, GAS & MINING

14. I hereby certify that the foregoing is true and correct

Signed Bobbie Schuman Title Regulatory and Environmental Specialist Date October 21, 1996

Bobbie Schuman

(This space for Federal or State office use)

Approved by _____ Title _____ Date _____

Conditions of approval, if any:

Title 18 U.S.C. Section 1001, makes it a crime for any person knowingly and willfully to make to any department or agency of the United States any false, fictitious or fraudulent statements or representations as to any matter within its jurisdiction.

*See Instruction on Reverse Side

RECEIVED
OCT
DIV OF OIL, GAS & MINING

EQUITABLE RESOURCES ENERGY CO.

MONUMENT FEDERAL #13-4-9-16Y 43-013-31716

NW/SW SECTION 4, T9S, R16E, SLB&M

Duchesne County, Utah

PALEONTOLOGY REPORT

WELLPAD LOCATION, ACCESS ROAD, & GAS LINE

BY

ALDEN H. HAMBLIN
PALEONTOLOGIST
P.O. BOX 731
VERNAL, UTAH 84078

OCTOBER 14, 1996

RECEIVED
OCT
DIV OF OIL, GAS & MINING

RESULTS OF PALEONTOLOGY SURVEY AT EQUITABLE RESOURCES ENERGY CO. MONUMENT FEDERAL #13-4-9-16, NW/SW Section 4, T9S, R16E, S.L.B.&M, Duchesne Co., Utah.

Description of Geology and Topography-

This well location is 9 miles south and 3 miles west of Myton, Utah, about 1 mile east of Wells Draw. This well location sits on a fairly flat area with a gentle slope to the east. The access road runs east from an existing road and is covered by reddish silty sand and rock fragments. The location also has a cover of tan rock fragments and sand, but this cover appears to be fairly thin.

All rock outcrops in the area are of the Middle Eocene Uinta Formation, known for its fossil vertebrate fauna of mammals, turtles, crocodilians, and occasional fish remains and plant impressions.

Paleontological material found -

No fossils were found on the wellpad, road or gas line.

Recommendations-

There is always some potential for encountering significant fossils when working in the Uinta Formation. If important looking fossil material is found during construction, a paleontologist should be called to evaluate it.

No other recommendations are being made for paleontology at this location.

Alden H. Hamblin
Paleontologist

Date October 14, 1996

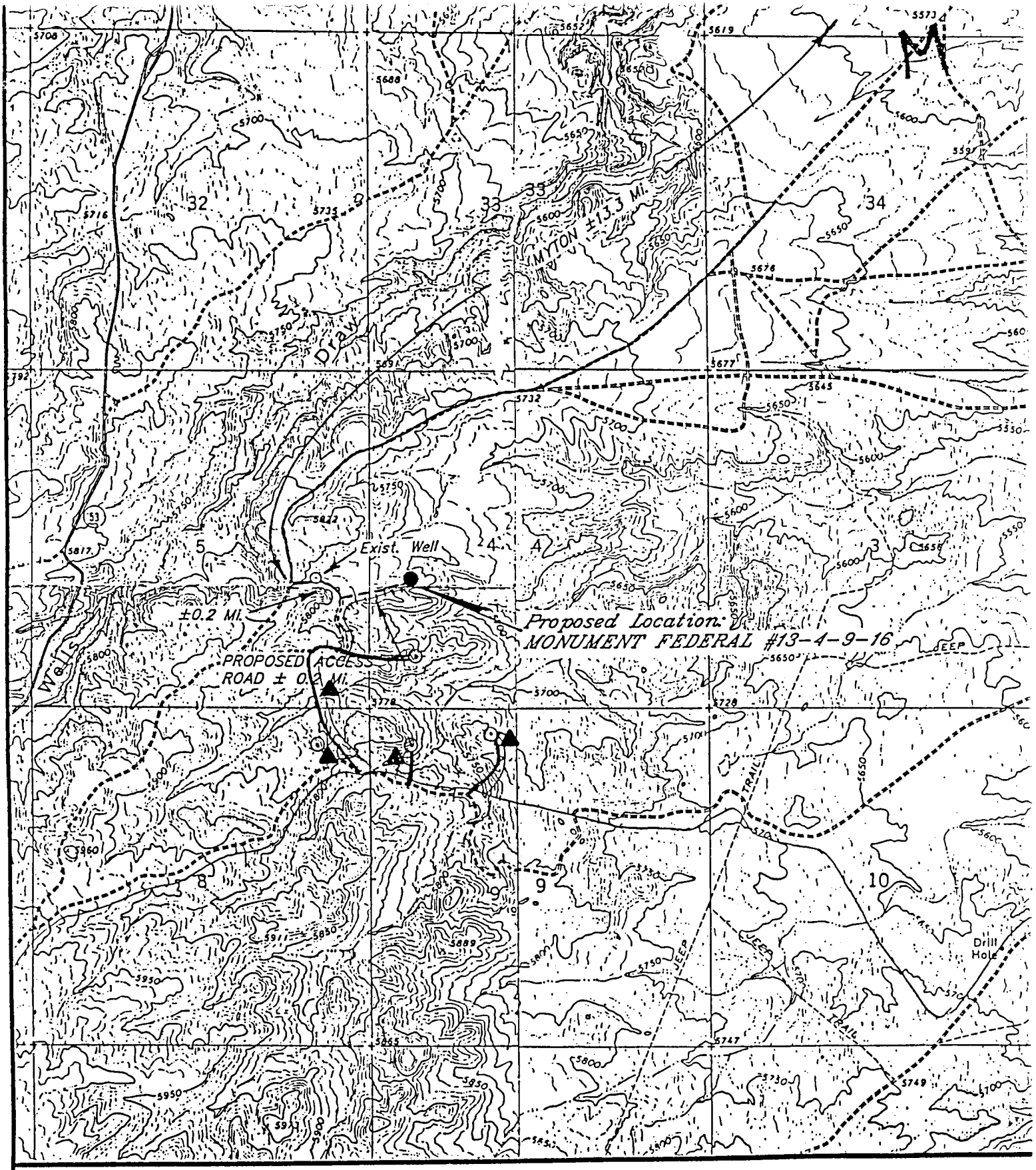

▲ existing gas meter
⊙ existing location
—— existing poly surface line
—— existing road

△ proposed gas meter
● proposed location
+++ proposed poly surface line
- - - - proposed road

N

PROPOSED GAS GATHERING

Monument Federal #13-4-9-16
Sec. 4, T9S, R16E

EQUITABLE RESOURCES
ENERGY COMPANY
WESTERN REGION

SCALE: 1" = 2000'

Form 3160-3
(November 1983)
(formerly 9-331C)

CONFIDENTIAL

UNITED STATES
DEPARTMENT OF THE INTERIOR
BUREAU OF LAND MANAGEMENT

SUBMIT IN TRIPLICATE*
(Other instructions on reverse side)

CONFIDENTIAL

Form approved.
Budget Bureau No. 1004-0136
Expires August 31, 1985

APPLICATION FOR PERMIT TO DRILL, DEEPEN, OR PLUG BACK

5. LEASE DESIGNATION AND SERIAL NO.: UTU-73086

6. IF INDIAN, ALLOTTEE OR TRIBE NAME: n/a

7. UNIT AGREEMENT NAME: n/a

8. FARM OR LEASE NAME: Monument Federal

9. WELL NO.: #13-4-9-16

10. FIELD AND POOL, OR WILDCAT: Monument Butte/Green River

11. SEC., T., R., M., OR BLK. AND SURVEY OR AREA: Sec. 4, T9S, R16E

12. COUNTY OR PARISH: Duchesne

13. STATE: UTAH

1a. TYPE OF WORK: DRILL [X] DEEPEN [ ] PLUG BACK [ ]

b. TYPE OF WELL: OIL WELL [X] GAS WELL [ ] OTHER SINGLE ZONE [ ] MULTIPLE ZONE [ ]

2. NAME OF OPERATOR: Equitable Resources Energy Company

3. ADDRESS OF OPERATOR: 1601 Lewis Avenue; Billings, MT 59102 (406) 259-7860

4. LOCATION OF WELL (Report location clearly and in accordance with any State requirements.*)
At surface: NW SW Section 4, T9S, R16E
At proposed prod. zone: 2050' FSL, 660' FWL

14. DISTANCE IN MILES AND DIRECTION FROM NEAREST TOWN OR POST OFFICE*: From Myton, Utah approximately 10 miles SW

15. DISTANCE FROM PROPOSED* LOCATION TO NEAREST PROPERTY OR LEASE LINE, FT. (Also to nearest drlg. unit line, if any):

16. NO. OF ACRES IN LEASE:

17. NO. OF ACRES ASSIGNED TO THIS WELL:

18. DISTANCE FROM PROPOSED LOCATION* TO NEAREST WELL, DRILLING, COMPLETED, OR APPLIED FOR, ON THIS LEASE, FT.:

19. PROPOSED DEPTH: 6,000'

20. ROTARY OR CABLE TOOLS: Rotary

21. ELEVATIONS (Show whether DF, RT, GR, etc.): GL 5761.2'

22. APPROX. DATE WORK WILL START*:

23. PROPOSED CASING AND CEMENTING PROGRAM

SIZE OF HOLE	SIZE OF CASING	WEIGHT PER FOOT	SETTING DEPTH	QUANTITY OF CEMENT
See Drilling Program/Casing Design				

Operator plans to drill this well in accordance with the attached EXHIBITS. A listing of EXHIBITS is also attached.

CONFIDENTIAL

SELF CERTIFICATION: I hereby certify that I am authorized, by proper lease interest owner, to conduct these operations associated with the application. Bond coverage pursuant to 43 CFR 3104 for lease activities is being provided by Equitable Resources Energy Company as principal and Safeco Insurance Company of America as surety under BLM Bond No. MT 0576 (Nationwide Oil & Gas Bond #5547188) who will be responsible for compliance with all of the terms and conditions of that portion of the lease associated with this application.

ORIGINAL: Bureau of Land Management (Vernal, UT)
COPY: Utah Division of Oil, Gas and Mining

IN ABOVE SPACE DESCRIBE PROPOSED PROGRAM: If proposal is to deepen or plug back, give data on present productive zone and proposed new productive zone. If proposal is to drill or deepen directionally, give pertinent data on subsurface locations and measured and true vertical depths. Give blowout preventer program, if any.

24. SIGNED Bobbie Schuman — TITLE Regulatory and Environmental Specialist — DATE September 25, 1996
Bobbie Schuman

(This space for Federal or State office use)

PERMIT NO. 43-013-31716 — APPROVAL DATE

APPROVED BY T.A. Matthews — TITLE Petroleum Engineer — DATE 11/25/96

CONDITIONS OF APPROVAL, IF ANY:

*See Instructions On Reverse Side

Title 18 U.S.C. Section 1001, makes it a crime for any person knowingly and willfully to make to any department or agency of the United States any false, fictitious or fraudulent statements or representations as to any matter within its jurisdiction.

T9S, R16E, S.L.B.&M.

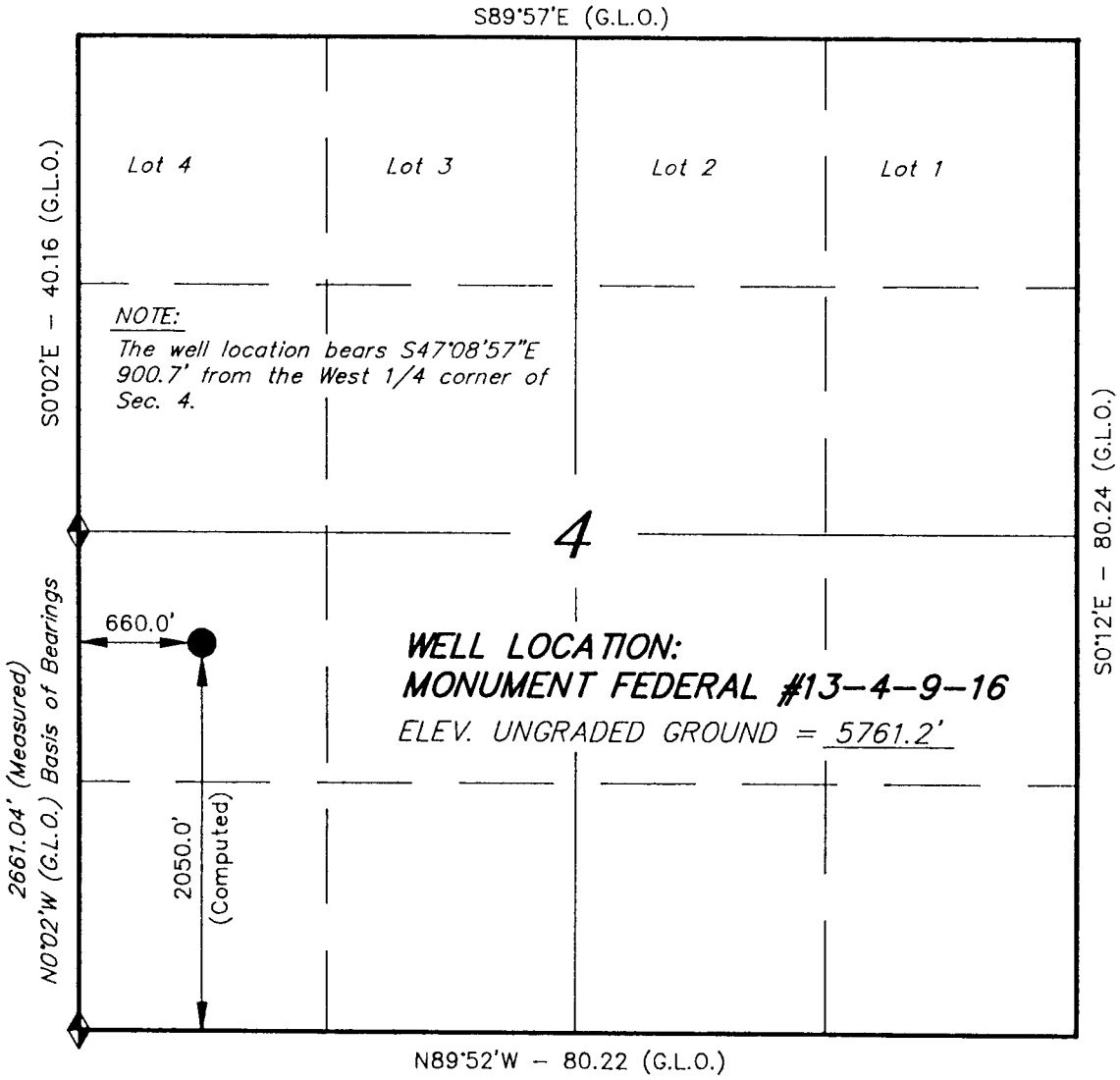

◆ = SECTION CORNERS LOCATED

BASIS OF ELEV; U.S.G.S. 7-1/2 min QUAD (MYTON SW)

EQUITABLE RESOURCES ENERGY CO.

WELL LOCATION, MONUMENT FEDERAL #13-4-9-16, LOCATED AS SHOWN IN THE NW 1/4 SW 1/4 OF SECTION 4, T9S, R16E, S.L.B.&M. DUCHESNE COUNTY, UTAH.

N

THIS IS TO CERTIFY THAT THE ABOVE PLAT WAS PREPARED FROM FIELD NOTES OF ACTUAL SURVEYS MADE BY ME OR UNDER MY SUPERVISION AND THAT THE SAME ARE TRUE AND CORRECT TO THE BEST OF MY KNOWLEDGE AND BELIEF.

REGISTERED LAND SURVEYOR
REGISTRATION No. 144102
STATE OF UTAH

TRI STATE LAND SURVEYING & CONSULTING
38 WEST 100 NORTH - VERNAL, UTAH 84078
(801) 781-2501

SCALE: 1" = 1000'	SURVEYED BY: G.S.
DATE: 9-8-96	WEATHER: WARM
NOTES:	FILE #

WORKSHEET
APPLICATION FOR PERMIT TO DRILL

APD RECEIVED: 09/30/96

API NO. ASSIGNED: 43-013-31716

WELL NAME: MONUMENT FEDERAL 13-4-9-16
OPERATOR: EQUITABLE RESOURCES (N9890)

PROPOSED LOCATION:
NWSW 04 - T09S - R16E
SURFACE: 2050-FSL-0660-FWL
BOTTOM: 2050-FSL-0660-FWL
DUCHESNE COUNTY
MONUMENT BUTTE FIELD (105)

LEASE TYPE: FED
LEASE NUMBER: UTU - 73086

PROPOSED PRODUCING FORMATION: GRRV

INSPECT LOCATION BY: / /		
TECH REVIEW	Initials	Date
Engineering		
Geology		
Surface		

RECEIVED AND/OR REVIEWED:

✓ Plat
✓ Bond: Federal [✓] State [] Fee []
(Number 5547185)
N Potash (Y/N)
N Oil shale (Y/N)
✓ Water permit
(Number JOE SHIELDS)
N RDCC Review (Y/N)
(Date:)

LOCATION AND SITING:

___ R649-2-3. Unit: ___

✓ R649-3-2. General.

___ R649-3-3. Exception.

___ Drilling Unit.
Board Cause no: ___
Date: ___

COMMENTS: ___

STIPULATIONS: ___

OPERATOR: EQUITABLE RESOURCES
FIELD: MONUMENT BUTTE (105)
SECTION: 31 T8S, R16E & 4,6,8 T9S R16E
COUNTY: DUCHESNE
SPACING: UAC R649-3-2

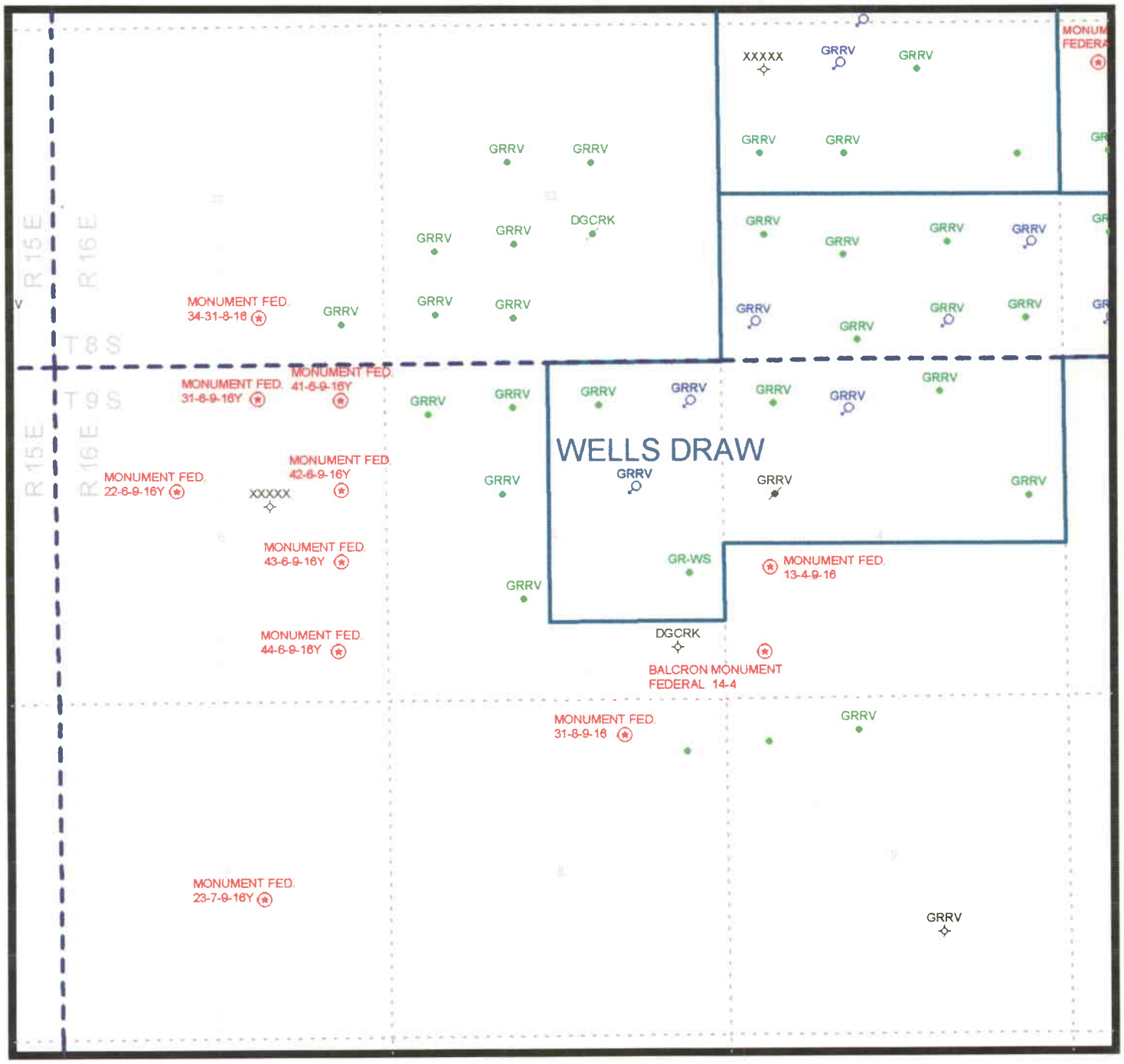

PREPARED:
DATE: 30-SEPT-96

STATE OF UTAH, DIV OF OIL, GAS & MINERALS

Operator: EQUITABLE RESOURCES	**Well Name: MON FED 13-4-9-16**
Project ID: 43-013-31716	**Location: SEC. 04 - T09S - R16E**

Design Parameters:

Mud weight (8.90 ppg)	: 0.462	psi/ft
Shut in surface pressure	: 2402	psi
Internal gradient (burst)	: 0.062	psi/ft
Annular gradient (burst)	: 0.000	psi/ft

Tensile load is determined using air weight

Service rating is "Sweet"

Design Factors:

Collapse	: 1.125	
Burst	: 1.00	
8 Round	: 1.80	(J)
Buttress	: 1.60	(J)
Other	: 1.50	(J)
Body Yield	: 1.50	(B)

	Length (feet)	Size (in.)	Weight (lb/ft)	Grade	Joint	Depth (feet)	Drift (in.)	Cost
1	6,000	5.500	15.50	K-55	ST&C	6,000	4.825	

	Collapse Load (psi)	Collapse Strgth (psi)	Collapse S.F.	Burst Load (psi)	Min Int Yield Strgth (psi)	Burst S.F.	Tension Load (kips)	Tension Strgth (kips)	Tension S.F.
1	2774	4040	1.456	2774	4810	1.73	93.00	222	2.39 J

Prepared by : MATTHEWS, Salt Lake City, Utah
Date : 11-25-1996
Remarks :

GRRV

Minimum segment length for the 6,000 foot well is 1,500 feet.

SICP is based on the ideal gas law, a gas gravity of 0.69, and a mean gas temperature of 116°F (Surface 74°F , BHT 158°F & temp. gradient 1.400°/100 ft.)

String type: Production

The mud gradient and bottom hole pressures (for burst) are 0.462 psi/ft and 2,774 psi, respectively.

NOTE: The design factors used in this casing string design are as shown above. As a general guideline, Lone Star Steel recommends using minimum design factors of 1.125 - collapse (with evacuated casing), 1.0 - (uniaxial) burst, 1.8 - API 8rd tension, 1.6 - buttress tension, 1.5 - body yield tension, and 1.6 - EUE 8rd tension. Collapse strength under axial tension was calculated based on the Westcott, Dunlop and Kemler curve. Engineering responsibility for use of this design will be that of the purchaser.
Costs for this design are based on a 1987 pricing model. (Version 1.07)

State of Utah
DEPARTMENT OF NATURAL RESOURCES
DIVISION OF OIL, GAS AND MINING

Michael O. Leavitt
Governor
Ted Stewart
Executive Director
James W. Carter
Division Director

355 West North Temple
3 Triad Center, Suite 350
Salt Lake City, Utah 84180-1203
801-538-5340
801-359-3940 (Fax)
801-538-5319 (TDD)

November 25, 1996

Equitable Resources Energy Company
1601 Lewis Avenue
Billings, Montana 59102

Re: Monument Federal 13-4-9-16 Well, 2050' FSL, 660' FWL, NW SW, Sec. 4, T. 9 S., R. 16 E., Duchesne County, Utah

Gentlemen:

Pursuant to the provisions and requirements of Utah Code Ann. 40-6-1 et seq., Utah Administrative Code R649-3-1 et seq., and the attached Conditions of Approval, approval to drill the referenced well is granted.

This approval shall expire one year from the above date unless substantial and continuous operation is underway, or a request for extension is made prior to the expiration date. The API identification number assigned to this well is 43-013-31716.

Sincerely,

R. J. Firth
Associate Director

lwp
Enclosures
cc: Duchesne County Assessor
Bureau of Land Management, Vernal District Office

Operator: Equitable Resources Energy Company

Well Name & Number: Monument Federal 13-4-9-16

API Number: 43-013-31716

Lease: UTU-73086

Location: NW SW **Sec.** 4 **T.** 9 S. **R.** 16 E.

Conditions of Approval

1. General
   Compliance with the requirements of Utah Admin. R. 649-1 et seq., the Oil and Gas Conservation General Rules, and the applicable terms and provisions of the approved Application for Permit to Drill.

2. Notification Requirements
   Notify the Division within 24 hours following spudding the well or commencing drilling operations. Contact Jimmie Thompson at (801)538-5336.

   Notify the Division prior to commencing operations to plug and abandon the well. Contact Frank Matthews at (801)538-5334 or Mike Hebertson at (801)538-5333.

3. Reporting Requirements
   All required reports, forms and submittals shall be promptly filed with the Division, including but not limited to the Entity Action Form (Form 6), Report of Water Encountered During Drilling (Form 7), Weekly Progress Reports for drilling and completion operations, and Sundry Notices and Reports on Wells requesting approval of change of plans or other operational actions.

Form 3160-3
(November 1983)
(formerly 9-331C)

CONFIDENTIAL

SUBMIT IN TRIPLICATE*
(Other instructions on reverse side)

Form approved.
Budget Bureau No. 1004-0136
Expires August 31, 1985

DEPARTMENT OF THE INTERIOR
BUREAU OF LAND MANAGEMENT

CONFIDENTIAL

5. LEASE DESIGNATION AND SERIAL NO.
UTU-73086

APPLICATION FOR PERMIT TO DRILL, DEEPEN, OR PLUG BACK

6. IF INDIAN, ALLOTTEE OR TRIBE NAME
n/a

1a. TYPE OF WORK
DRILL [X] DEEPEN [ ] PLUG BACK [ ]

7. UNIT AGREEMENT NAME
n/a

b. TYPE OF WELL
OIL WELL [X] GAS WELL [ ] OTHER SINGLE ZONE [ ] MULTIPLE ZONE [ ]

8. FARM OR LEASE NAME
Monument Federal

2. NAME OF OPERATOR
Equitable Resources Energy Company

9. WELL NO.
#13-4-9-16

3. ADDRESS OF OPERATOR
1601 Lewis Avenue; Billings, MT 59102 (406) 259-7860

10. FIELD AND POOL, OR WILDCAT
Monument Butte/Green River

4. LOCATION OF WELL (Report location clearly and in accordance with any State requirements.*)
At surface
NW SW Section 4, T9S, R16E
At proposed prod. zone
2050' FSL, 660' FNL

11. SEC., T., R., M., OR BLK. AND SURVEY OR AREA
Sec. 4, T9S, R16E

14. DISTANCE IN MILES AND DIRECTION FROM NEAREST TOWN OR POST OFFICE*
From Myton, Utah approximately 10 miles SW

12. COUNTY OR PARISH
Duchesne

13. STATE
UTAH

15. DISTANCE FROM PROPOSED* LOCATION TO NEAREST PROPERTY OR LEASE LINE, FT. (Also to nearest drlg. unit line, if any)

16. NO. OF ACRES IN LEASE

17. NO. OF ACRES ASSIGNED TO THIS WELL

18. DISTANCE FROM PROPOSED LOCATION* TO NEAREST WELL, DRILLING, COMPLETED, OR APPLIED FOR, ON THIS LEASE, FT.

19. PROPOSED DEPTH
6,000'

20. ROTARY OR CABLE TOOLS
Rotary

21. ELEVATIONS (Show whether DF, RT, GR, etc.)
GL 5761.2'

22. APPROX. DATE WORK WILL START*

23. PROPOSED CASING AND CEMENTING PROGRAM

SIZE OF HOLE	SIZE OF CASING	WEIGHT PER FOOT	SETTING DEPTH	QUANTITY OF CEMENT
See Drilling Program/Casing Design				

Operator plans to drill this well in accordance with the attached EXHIBITS. A listing of EXHIBITS is also attached.

RECEIVED
SEP 30 1996

SELF CERTIFICATION: I hereby certify that I am authorized, by proper lease interest owner, to conduct these operations associated with the application. Bond coverage pursuant to 43 CFR 3104 for lease activities is being provided by Equitable Resources Energy Company as principal and Safeco Insurance Company of America as surety under BLM Bond No. MT 0576 (Nationwide Oil & Gas Bond #5547188) who will be responsible for compliance with all of the terms and conditions of that portion of the lease associated with this application.

ORIGINAL: Bureau of Land Management (Vernal, UT)
COPY: Utah Division of Oil, Gas and Mining

IN ABOVE SPACE DESCRIBE PROPOSED PROGRAM: If proposal is to deepen or plug back, give data on present productive zone and proposed new productive zone. If proposal is to drill or deepen directionally, give pertinent data on subsurface locations and measured and true vertical depths. Give blowout preventer program, if any.

24.
SIGNED Bobbie Schuman
Bobbie Schuman
TITLE Regulatory and Environmental Specialist
DATE September 25, 1996

(This space for Federal or State office use)

PERMIT NO.
APPROVAL DATE

APPROVED BY Jerry Kenzler
TITLE ACTING Assistant Field Manager Mineral Resources
DATE NOV 26 1996

CONDITIONS OF APPROVAL, IF ANY

NOTICE OF APPROVAL

CONDITIONS OF APPROVAL ATTACHED TO OPERATOR'S COPY

UT080-6M-224

*See Instructions On Reverse Side

Title 18 U.S.C. Section 1001, makes it a crime for any person knowingly and willfully to make to any department or agency of the United States any false, fictitious or fraudulent statements or representations as to any matter within its jurisdiction.

CONDITIONS OF APPROVAL
APPLICATION FOR PERMIT TO DRILL

Company/Operator: Equitable Resources Energy Company

Well Name & Number: Equitable Monument Federal 13-4-9-16

API Number: 43-013-31716

Lease Number: U - 73086

Location: NWSW Sec. 04 T. 9S R. 16E

NOTIFICATION REQUIREMENTS

Location Construction	-	at least forty-eight (48) hours prior to construction of location and access roads.
Location Completion	-	prior to moving on the drilling rig.
Spud Notice	-	at least twenty-four (24) hours prior to spudding the well.
Casing String and Cementing	-	at least twenty-four (24) hours prior to running casing and cementing all casing strings.
BOP and Related Equipment Tests	-	at least twenty-four (24) hours prior to initiating pressure tests.
First Production Notice	-	within five (5) business days after new well begins, or production resumes after well has been off production for more than ninety (90) days.

For more specific details on notification requirements, please check the Conditions of Approval for Notice to Drill and Surface Use Program.

CONDITIONS OF APPROVAL FOR NOTICE TO DRILL

Approval of this application does not warrant or certify that the applicant holds legal or equitable title to those rights in the subject lease which would entitle the applicant to conduct operations thereon.

All lease and/or unit operations will be conducted in such a manner that full compliance is made with applicable laws, regulations (43 CFR 3100), Onshore Oil and Gas Orders, and the approved plan of operations. The operator is fully responsible for the actions of his subcontractors. A copy of these conditions will be furnished the field representative to insure compliance.

Be aware fire restrictions may be in effect when location is being constructed and/or when well is being drilled. Contact the appropriate Surface Management Agency for information.

A. DRILLING PROGRAM

1. Estimated Depth at Which Oil, Gas, Water, or Other Mineral Bearing Zones are Expected to be Encountered

Report ALL water shows and water-bearing sands to Tim Ingwell of this office **prior to setting the next casing string or requesting plugging orders**. Faxed ccpies of State of Utah form OGC-8-X are acceptable. If noticeable water flows are detected, submit samples to this office along with any water analyses conducted.

All usable water and prospectively valuable minerals (as described by BLM at onsite) encountered during drilling, will be recorded by depth and adequately protected. All oil and gas shows will be tested to determine commercial potential.

2. Pressure Control Equipment

The BOP and related equipment shall meet the minimum requirements of Onshore Oil and Gas Order No. 2 for equipment and testing requirements, procedures, etc., for a **2M** system and individual components shall be operable as designed. Chart recorders shall be used for all pressure tests.

Test charts, with individual test results identified, shall be maintained on location while drilling and shall be made available to a BLM representative upon request.

If an air compressor is on location and is being utilized to provide air for the drilling medium while drilling, the special drilling requirements in Onshore Oil and Gas Order No. 2, regarding air or gas drilling shall be adhered to. If a mist system is being utilized then the requirement for a deduster shall be waived.

The Vernal Field Office shall be notified, at least 24 hours prior to initiating the pressure tests, in order to have a BLM representative on location during pressure testing.

3. Casing Program and Auxiliary Equipment

Surface casing shall have centralizers on the bottom three joints, with a minimum of one centralizer per joint.

As a minimum, the usable water and oil shale resources shall be isolated and/or protected by having a cement top for the production casing at least 200 ft. above the base of the usable water zone, identified at 1,757 ft. If gilsonite is encountered while drilling, it shall be isolated and/or protected via the cementing program.

The Vernal Field Office shall be notified at least 24 hours prior to the running and cementing of all casing strings, in order to have a BLM representative on location while running and cementing all casing strings.

4. Mud Program and Circulating Medium

Hazardous substances specifically listed by the EPA as a hazardous waste or demonstrating a characteristic of a hazardous waste will not be used in drilling, testing, or completion operations.

No chromate additives will be used in the mud system on Federal and Indian lands without prior BLM approval to ensure adequate protection of fresh water aquifers.

5 .Coring, Logging and Testing Program

Daily drilling and completion progress reports shall be submitted to this office on a weekly basis.

All Drill Stem tests (DST) shall be accomplished during daylight hours, unless specific approval to start during other hours is obtained from the AO. However, DSTs may be allowed to continue at night if the test was initiated during daylight hours and the rate of flow is stabilized and if adequate lighting is available (i.e., lighting which is adequate for visibility and vaporproof for safe operations). Packers can be released, but tripping should not begin before daylight unless prior approval is obtained from the AO.

A cement bond log (CBL) will be run from the production casing shoe to ± 1557 ft. and shall be utilized to determine the bond quality for the production casing. Submit a field copy of the CBL to this office.

Whether the well is completed as a dry hole or as a producer, "Well Completion and Recompletion Report and Log" (Form 3160-4) will be submitted not later than 30 days after completion of the well or after completion of operations being performed, in accordance with 43 CFR 3164. Two copies of all logs, core descriptions, core analyses, well-test data, geologic summaries, sample description, and all other surveys or data obtained and compiled during the drilling, workover, and/or completion operations, will be filed with Form 3160-4. Samples (cuttings, fluids, and/or gases) will be submitted when requested by the AO.

6. Notifications of Operations

No location will be constructed or moved, no well will be plugged, and no drilling or workover equipment will be removed from a well to be placed in a suspended status without prior approval of the AO. If operations are to be suspended, prior approval of the AO will be obtained and notification given before resumption of operations.

The Vernal Field Office shall be notified, during regular work hours (7:45 a.m.-4:30 p.m., Monday through Friday except holidays), at least 24 hours **prior** to spudding the well.

Operator shall report production data to MMS pursuant to 30 CFR 216.5 using form MMS/3160.

Immediate Report: Spills, blowouts, fires, leaks, accidents, or any other unusual occurrences shall be promptly reported in accordance with the requirements of NTL-3A or its revision.

If a replacement rig is contemplated for completion operations, a "Sundry Notice" (Form 3160-5) to that effect will be filed, for prior approval of the AO, and all conditions of this approved plan are applicable during all operations conducted with the replacement rig.

The date on which production is commenced or resumed will be construed for oil wells as the date on which liquid hydrocarbons are first sold or shipped from a temporary storage facility, such as a test tank, and for which a run ticket is required to be generated or, the date on which liquid hydrocarbons are first produced into a permanent storage facility, whichever first occurs; and, for gas wells as the date on which associated liquid hydrocarbons are first sold or shipped from a temporary storage facility, such as a test tank, and for which a run ticket is required to be generated or, the date on which gas is first measured through permanent metering facilities, whichever first occurs.

Should the well be successfully completed for production, the AO will be notified when the well is placed in a producing status. Such notification will be sent by telegram or other written communication, not later than five (5) days following the date on which the well is placed on production.

Gas produced from this well may not be vented or flared beyond an initial authorized test period of 30 days or 50 MMCF following its completion, whichever occurs first, without the prior written approval of the Authorized Officer. Should gas be vented or flared without approval beyond the authorized test period, the operator may be directed to shut-in the well until the gas can be captured or approval to continue venting or flaring as uneconomic is granted and the operator shall be required to compensate the lessor for that portion of the gas vented or flared without approval which is determined to have been avoidably lost.

A schematic facilities diagram as required by 43 CFR 3162.7-2, 3162.7-3, and 3162.7-4 shall be submitted to the appropriate District Office within thirty (30) days of installation or first production, whichever occurs first. All site security regulations as specified in Onshore Oil & Gas Order No. 3 shall be adhered to. All product lines entering and leaving hydrocarbon storage tanks will be effectively sealed in accordance with 43 CFR 3162.7-4.

No well abandonment operations will be commenced without the prior approval of the AO. In the case of newly drilled dry holes or failures, and in emergency situations, oral approval will be obtained from the AO. A "Subsequent Report of Abandonment" Form 3160-5, will be filed with the AO within thirty (30) days following completion of the well for abandonment. This report will indicate where plugs were placed and the current status of surface restoration. Final abandonment will not be approved until the surface reclamation work required by the approved APD or approved abandonment notice has been completed to the satisfaction of the AO or his representative, or the appropriate Surface Managing Agency.

7. Other Information

All loading lines will be placed inside the berm surrounding the tank battery.

All off-lease storage, off-lease measurement, or commingling onlease or off-lease will have prior written approval from the AO.

The oil and gas measurement facilities will be installed on the well location. The oil and gas meters will be calibrated in place prior to any deliveries. Tests for meter accuracy will be conducted on initial meter installations and at least quarterly thereafter. The AO will be provided with a date and time for the initial meter calibration and all future meter proving schedules. A copy of the meter calibration reports will be submitted to the Vernal Field Office. All meter measurement facilities will conform with Onshore Oil & Gas Order No. 4 for liquid hydrocarbons and Onshore Oil & Gas Order No. 5 for natural gas measurement.

The use of materials under BLM jurisdiction will conform to 43 CFR 3610.2-3.

There will be no deviation from the proposed drilling and/or workover program without prior approval from the AO. Safe drilling and operating practices must be observed. All wells, whether drilling, producing, suspended, or abandoned will be identified in accordance with 43 CFR 3162.

"Sundry Notice and Report on Wells" (Form 3160-5) will be filed for approval for all changes of plans and other operations in accordance with 43 CFR 3162.3-2.

Section 102(b)(3) of the Federal Oil and Gas Royalty Management Act of 1982, as implemented by the applicable provisions of the operating regulations at Title 43 CFR 3162.4-1(c), requires that "not later than the 5th business day after any well begins production on which royalty is due anywhere on a lease site or allocated to a lease site, or resumes production in the case of a well which has been off production for more than 90 days, the operator shall notify the authorized officer by letter or sundry notice, Form 3160-5, or orally to be followed by a letter or sundry notice, of the date on which such production has begun or resumed."

If you fail to comply with this requirement in the manner and time allowed, you shall be liable for a civil penalty of up to $10,000 per violation for each day such violation continues, not to exceed a maximum of 20 days. See Section 109(c)(3) of the Federal Oil and Gas Royalty Management Act of 1982 and the implementing regulations at Title 43 CFR 3162.4-1(b)(5)(ii).

APD approval is valid for a period of one (1) year from the signature date. An extension period may be granted, if requested, prior to the expiration of the original approval period.

In the event after-hours approvals are necessary, please contact one of the following individuals:

Ed Forsman (801) 789-7077
Petroleum Engineer

Wayne P. Bankert (801) 789-4170
Petroleum Engineer

Jerry Kenczka (801) 789-1190
Petroleum Engineer

BLM FAX Machine (801) 781-4410

EPA'S LIST OF NONEXEMPT EXPLORATION AND PRODUCTION WASTES

While the following wastes are nonexempt, they are not necessarily hazardous.

Unused fracturing fluids or acids

Gas plant cooling tower cleaning wastes

Painting wastes

Oil and gas service company wastes, such as empty drums, drum rinsate, vacuum truck rinsate, sandblast media, painting wastes, spend solvents, spilled chemicals, and waste acids

Vacuum truck and drum rinsate from trucks and drums, transporting or containing nonexempt waste

Refinery wastes

Liquid and solid wastes generated by crude oil and tank bottom reclaimers

Used equipment lubrication oils

Waste compressor oil, filters, and blowdown

Used hydraulic fluids

Waste solvents

Waste in transportation pipeline-related pits

Caustic or acid cleaners

Boiler cleaning wastes

Boiler refractory bricks

Incinerator ash

Laboratory wastes

Sanitary wastes

Pesticide wastes

Radioactive tracer wastes

Drums, insulation and miscellaneous solids.

SURFACE USE PROGRAM
Conditions of Approval (COAs)

METHODS FOR HANDLING WASTE MATERIALS AND DISPOSAL

The reserve pit shall be lined with a synthetic liner that is a minimum of 12 mil thickness with sufficient bedding to cover any rocks. The liner will overlap the pit walls and be covered with dirt and/or rocks to hold it in place. No trash, scrap pipe, etc., that could puncture the liner will be disposed of in the pit.

Plans For Reclamation Of Location

When reclaiming the reserve pit, the pit liner will be torn and perforated before backfilling the reserve pit and the torn liner will be buried a minimum of four (4) feet deep. If this is a producing well and after the reclamation of the reserve pit, and unused disturbed areas, contact the authorized office to obtain a seed mixture to revegetate these specific areas.

At time of final abandonment the intent of reclamation will be to return the disturbed area to near natural conditions. Recontour the surface of the disturbed area to **blend all cuts, fills, road berms, and borrow ditches to be natural in appearance** with the surrounding terrain. After recontouring of the area any stockpiled topsoil will be spread over the surface, and the area reseeded and revegetated to the satisfaction of the authorized officer of the BLM. Contact the authorized officer of the BLM at the time of reclamation for the required seed mixture.

Other Information

The operator or their contractor shall contact the BLM office at (801)789-1362, 48 hours prior to construction activities.

Raptor Habitat

Due to raptor habitat in the area, if this is a producing well the operator is required to install a multicylinder engine to the pumping unit to limit noise impacts to nesting raptor species.

DIVISION OF OIL, GAS AND MINING

SPUDDING INFORMATION

Name of Company: EQUITABLE RESOURCES

Well Name: MONUMENT FEDERAL 13-4-9-16

Api No. 43-013-31716

Section 4 Township 9S Range 16E County DUCHESNE

Drilling Contractor UNION

Rig # 17

SPUDDED:

Date 1/5/97

Time

How ROTARY

Drilling will commence

Reported by D. INGRAM

Telephone #

Date: 1/15/97 Signed: JLT

Form 3160-5
(June 1990)

UNITED STATES
DEPARTMENT OF THE INTERIOR
BUREAU OF LAND MANAGEMENT

FORM APPROVED
Budget Bureau No. 1004-0135
Expires: March 31, 1993

SUNDRY NOTICES AND REPORTS ON WELLS

Do not use this form for proposals to drill or to deepen or reentry to a different reservoir.
Use "APPLICATION FOR PERMIT—" for such proposals

SUBMIT IN TRIPLICATE

5. Lease Designation and Serial No.: UTU-73086
6. If Indian, Allottee or Tribe Name: n/a
7. If Unit or CA, Agreement Designation: n/a
8. Well Name and No.: Mon. Fed. 13-4-9-16
9. API Well No.: 43-013-31716
10. Field and Pool, or Exploratory Area: Mon. Butte / Green River
11. County or Parish, State: Duchesne Co., Utah

1. Type of Well: [X] Oil Well [ ] Gas Well [ ] Other
2. Name of Operator: Equitable Resources Energy Company
3. Address and Telephone No.: 1601 Lewis Avenue; Billings, MT 59102 (406) 259-7860
4. Location of Well (Footage, Sec., T., R., M., or Survey Description): NW SW Sec. 4 - T9S-16E 2050' FSL 660' FWL

12. CHECK APPROPRIATE BOX(s) TO INDICATE NATURE OF NOTICE, REPORT, OR OTHER DATA

TYPE OF SUBMISSION	TYPE OF ACTION	
[ ] Notice of Intent	[ ] Abandonment	[ ] Change of Plans
[X] Subsequent Report	[ ] Recompletion	[ ] New Construction
[ ] Final Abandonment Notice	[ ] Plugging Back	[ ] Non-Routine Fracturing
	[ ] Casing Repair	[ ] Water Shut-Off
	[ ] Altering Casing	[ ] Conversion to Injection
	[X] Other Spud of well	[ ] Dispose Water (Note: Report results of multiple completion on Well Completion or Recompletion Report and Log form.)

13. Describe Proposed or Completed Operations (Clearly state all pertinent details, and give pertinent dates, including estimated date of starting any proposed work. If well is directionally drilled, give subsurface locations and measured and true vertical depths for all markers and zones pertinent to this work.)*

Spud this well at 2p.m. 1-6-97

CONFIDENTIAL

RECEIVED
JAN 14 1997
DIV. OF OIL, GAS & MINING

ORIGINAL: BLM (Vernal)
Copy: Utah DOGM (w/Entity Action form)

14. I hereby certify that the foregoing is true and correct
Signed: Bobbie Schuman — Title: Regulatory and Environmental Specialist — Date: January 9, 1997

(This space for Federal or State office use)
Approved by _____ Title _____ Date _____
Conditions of approval, if any:

Title 18 U.S.C. Section 1001, makes it a crime for any person knowingly and willfully to make to any department or agency of the United States any false, fictitious or fraudulent statements or representations as to any matter within its jurisdiction.

*See Instruction on Reverse Side

STATE OF UTAH
DIVISION OF OIL, GAS AND MINING

ENTITY ACTION FORM - FORM 6

OPERATOR Equitable Resources Energy Company OPERATOR ACCT. NO. N 9890

ADDRESS 1601 Lewis
Billings Mt 59102

ACTION CODE	CURRENT ENTITY NO.	NEW ENTITY NO.	API NUMBER	WELL NAME	WELL LOCATION QQ	SC	TP	RG	COUNTY	SPUD DATE	EFFECTIVE DATE
A	99999	12054	43-013-31716	Mon Fed. # 13-4-9-16	NW SW	4	9S	16E	Duchesne	1-6-97	1-6-97

WELL 1 COMMENTS: Spud of new well Entity added 1-15-97. Lc

WELL 2 COMMENTS:

WELL 3 COMMENTS:

WELL 4 COMMENTS:

WELL 5 COMMENTS:

RECEIVED
JAN 15 1997
DIV OF OIL, GAS & MINING

ACTION CODES (See instructions on back of form)
- A - Establish new entity for new well (single well only)
- B - Add new well to existing entity (group or unit well)
- C - Re-assign well from one existing entity to another existing entity
- D - Re-assign well from one existing entity to a new entity
- E - Other (explain in comments section)

NOTE: Use COMMENT section to explain why each Action Code was selected.

(3/89)

Bobbie Schuman
Signature

Regulatory Spec. 1-9-97
Title Date

Phone No. (406) 259-7860

STATE OF UTAH
DIVISION OF OIL, GAS AND MINING

ENTITY ACTION FORM - FORM 6

OPERATOR Equitable Resources Energy Company

ADDRESS 1601 Lewis Avenue
Billings, MT 59102
(406) 259-7860

OPERATOR ACCT. NO. N 9890

ACTION CODE	CURRENT ENTITY NO.	NEW ENTITY NO.	API NUMBER	WELL NAME	WELL LOCATION QQ	SC	TP	RG	COUNTY	SPUD DATE	EFFECTIVE DATE
A	99999	12054	43-013-31716	Monument Fed. #13-4-9-16	NW SW	4	T9S	16E	Duchesne	1-6-97	
WELL 1 COMMENTS: Spud of a new well. Entities added 2-7-97. fec Entity previously added 13-4-9-16. fec (12054)											
A	99999	12065	43-013-31723	Monument Fed. #43-10-9-16	NE SE	10	9S	16E	Duchesne	1-25-97	
WELL 2 COMMENTS: Spud of a new well.											
A	99999	12066	43-013-31720	Monument Fed. #44-6-9-16Y	SE SE	6	9S	16E	Duchesne	12-30-96	12-30-96
WELL 3 COMMENTS: Spud of a new well.											
A	99999	12067	43-013-31715	Monument Fed. #34-31-8-16	SW SE	31	8S	16E	Duchesne	12-7-96	12-7-96
WELL 4 COMMENTS: Spud of a new well.											
WELL 5 COMMENTS:											

ACTION CODES (See instructions on back of form)
A - Establish new entity for new well (single well only)
B - Add new well to existing entity (group or unit well)
C - Re-assign well from one existing entity to another existing entity
D - Re-assign well from one existing entity to a new entity
E - Other (explain in comments section)

NOTE: Use COMMENT section to explain why each Action Code was selected.

(3/89)

Molly Conrad
Signature

Operations Tech. 2/7/96.
Title Date

Phone No. ( )

FEB 07 '97 09:13PM BALCRON OIL DIV P.2/2

Form 3160-5
(June 1990)

UNITED STATES
DEPARTMENT OF THE INTERIOR
BUREAU OF LAND MANAGEMENT

FORM APPROVED
Budget Bureau No. 1004-0135
Expires: March 31, 1993

SUNDRY NOTICES AND REPORTS ON WELLS

Do not use this form for proposals to drill or to deepen or reentry to a different reservoir.
Use "APPLICATION FOR PERMIT—" for such proposals

SUBMIT IN TRIPLICATE

5. Lease Designation and Serial No.: UTU-73086

6. If Indian, Allottee or Tribe Name: n/a

7. If Unit or CA, Agreement Designation: n/a

1. Type of Well: [X] Oil Well [ ] Gas Well [ ] Other

8. Well Name and No.: Mon. Fed. #13-4-9-16

2. Name of Operator: Equitable Resources Energy Company

9. API Well No.: 43-013-31716

3. Address and Telephone No.: 1601 Lewis Avenue; Billings, MT 59102 (406) 259-7860

10. Field and Pool, or Exploratory Area: Mon. Butte/Grn River

4. Location of Well (Footage, Sec., T., R., M., or Survey Description): NW SW Section 4, T9S, R16E
2050' FSL, 660' FWL

CONFIDENTIAL

11. County or Parish, State: Duchesne County, UTAH

12. CHECK APPROPRIATE BOX(s) TO INDICATE NATURE OF NOTICE, REPORT, OR OTHER DATA

TYPE OF SUBMISSION	TYPE OF ACTION	
[ ] Notice of Intent	[ ] Abandonment	[ ] Change of Plans
[X] Subsequent Report	[ ] Recompletion	[ ] New Construction
[ ] Final Abandonment Notice	[ ] Plugging Back	[ ] Non-Routine Fracturing
	[ ] Casing Repair	[ ] Water Shut-Off
	[ ] Altering Casing	[ ] Conversion to Injection
	[X] Other 1st production	[ ] Dispose Water (Note: Report results of multiple completion on Well Completion or Recompletion Report and Log form.)

13. Describe Proposed or Completed Operations (Clearly state all pertinent details, and give pertinent dates, including estimated date of starting any proposed work. If well is directionally drilled, give subsurface locations and measured and true vertical depths for all markers and zones pertinent to this work.)*

First production on this well was: February 4, 1997

ORIGINAL: Bureau of Land Management (Vernal, UT)
COPY: Utah Division of Oil, Gas and Mining

RECEIVED
FEB 10 1997
DIV. OF OIL, GAS & MINING

14. I hereby certify that the foregoing is true and correct

Signed Bobbie Schuman Title Regulatory and Environmental Specialist Date February 5, 1997

Bobbie Schuman

(This space for Federal or State office use)

Approved by _____ Title _____ Date _____

Conditions of approval, if any:

Title 18 U.S.C. Section 1001, makes it a crime for any person knowingly and willfully to make to any department or agency of the United States any false, fictitious or fraudulent statements or representations as to any matter within its jurisdiction.

*See Instruction on Reverse Side

(Faxed Copy)

Rec'd 8-27-97

Form 3160-4 (November 1983) (formerly 9-330)

UNITED STATES
DEPARTMENT OF THE INTERIOR
BUREAU OF LAND MANAGEMENT

SUBMIT IN DUPLICATE* (See other instructions on reverse side)

Form approved. Budget Bureau No. 1004-0137 Expires August 31, 1985

WELL COMPLETION OR RECOMPLETION REPORT AND LOG*

1a. TYPE OF WELL: OIL WELL [X] GAS WELL [ ] DRY [ ] Other

b. TYPE OF COMPLETION: NEW WELL [X] WORK OVER [ ] DEEP-EN [ ] PLUG BACK [ ] DIFF. RESVR. [ ] Other CONFIDENTIAL

2. NAME OF OPERATOR: EQUITABLE RESOURCES ENERGY COMPANY

3. ADDRESS OF OPERATOR: 1601 LEWIS AVENUE BILLINGS, MT 59102 (406)259-7860

4. LOCATION OF WELL (Report location clearly and in accordance with any State requirements)*
At surface: 2050' FSL & 660' ~~FNL~~ FWL
At top prod. interval reported below
At total depth

CONFIDENTIAL

5. LEASE DESIGNATION AND SERIAL NO.: UTU-73086
6. IF INDIAN, ALLOTTEE OR TRIBE NAME: n/a
7. UNIT AGREEMENT NAME: n/a
8. FARM OR LEASE NAME: MONUMENT FEDERAL
9. WELL NO.: #13-4-9-16
10. FIELD AND POOL, OR WILDCAT: Monument Butte/Green River
11. SEC., T., R., M., OR BLOCK AND SURVEY OR AREA: NW SW Section 4, T9S, R16E

14. PERMIT NO.	DATE ISSUED	12. COUNTY OR PARISH	13. STATE
43-013-31716	11-25-96	Duchesne	Utah

15. DATE SPUDDED	16. DATE T.D. REACHED	17. DATE COMPL. (Ready to prod.)	18. ELEVATIONS (DF, RKB, RT, GR, ETC.)*	19. ELEV. CASINGHEAD
1-6-97	1-14-97	2-4-97	5761.2'GL	n/a

20. TOTAL DEPTH, MD & TVD	21. PLUG, BACK T.D., MD & TVD	22. IF MULTIPLE COMPL., HOW MANY*	23. INTERVALS DRILLED BY	ROTARY TOOLS	CABLE TOOLS
6000'	5924'	n/a	→	SFC-TD	n/a

24. PRODUCING INTERVAL(S), OF THIS COMPLETION—TOP, BOTTOM, NAME (MD AND TVD)*
5281'-5345' GREEN RIVER

25. WAS DIRECTIONAL SURVEY MADE: NO

26. TYPE ELECTRIC AND OTHER LOGS RUN
DLL/GR LDT/CNL GR/CBL MUD 2-20-97

27. WAS WELL CORED: NO

28. CASING RECORD (Report all strings set in well)

CASING SIZE	WEIGHT, LB./FT.	DEPTH SET (MD)	HOLE SIZE	CEMENTING RECORD	AMOUNT PULLED
8-5/8"	24#	263.30'KB	12-1/4"	160sxs"G" w/additives	NONE
5-1/2"	15.5#	5924.75'KB	7-7/8"	275sxs Pream Lite Plus w/ additives	NONE

29. LINER RECORD

SIZE	TOP (MD)	BOTTOM (MD)	SACKS CEMENT*	SCREEN (MD)
n/a				

30. TUBING RECORD

SIZE	DEPTH SET (MD)	PACKER SET (MD)
2-7/8"	5218.28'KB	n/a

31. PERFORATION RECORD (Interval, size and number)
5281'-86' (4 SPF)
5308'-17' (4 SPF)
5328'-45' (4 SPF)

CONFIDENTIAL

32. ACID, SHOT, FRACTURE, CEMENT SQUEEZE, ETC.

DEPTH INTERVAL (MD)	AMOUNT AND KIND OF MATERIAL USED
(SEE ATTACHMENT	FOR DETAILS)

33.* PRODUCTION

DATE FIRST PRODUCTION	PRODUCTION METHOD (Flowing, gas lift, pumping—size and type of pump)	WELL STATUS (Producing or shut-in)
2-4-97	1-1/2" Insert Pump	PRODUCING

DATE OF TEST	HOURS TESTED	CHOKE SIZE	PROD'N. FOR TEST PERIOD	OIL—BBL.	GAS—MCF.	WATER—BBL.	GAS-OIL RATIO
2-14-97	24	n/a	→	64.6	116	0	1.8 MCF/BBL

FLOW. TUBING PRESS.	CASING PRESSURE	CALCULATED 24-HOUR RATE	OIL—BBL.	GAS—MCF.	WATER—BBL.	OIL GRAVITY-API (CORR.)
n/a	n/a	→	64.6	116	0	34

34. DISPOSITION OF GAS (Sold, used for fuel, vented, etc.)
USED FOR FUEL.

TEST WITNESSED BY: DALE GRIFFIN

35. LIST OF ATTACHMENTS
#32.

36. I hereby certify that the foregoing and attached information is complete and correct as determined from all available records

SIGNED Debbie Schuman TITLE ~~Operations Secretary~~ Regulatory Specialist DATE 3-19-97

*(See Instructions and Spaces for Additional Data on Reverse Side)

Title 18 U.S.C. Section 1001 ...

ATTACHMENT TO COMPLETION REPORT
MONUMENT FEDERAL #13-4-9-16
NW SW SECTION 4, T9S, R16E
DUCHESNE COUNTY, UTAH

DEPTH INTERVAL	AMOUNT AND KIND OF MATERIAL USED
5281'-86'	Breakdown with 2,352 gallons 2% KCL water. Fracture with 27,678 gallons 2% KCL gelled water, 27,000# 20/40 mesh sand and 66,900# 16/30 mesh sand.
5308'-17'	Breakdown with 3,990 gallons 2% KCL water. Fracture with 27,678 gallons 2% KCL gelled water, 27,000# 20/40 mesh sand and 66,900# 16/30 mesh sand
5328'-45'	Breakdown with 3,990 gallons 2% KCL water. Fracture with 27,678 gallons 2% KCL gelled water, 27,000# 20/40 mesh sand and 66,900# 16/30 mesh sand

37. SUMMARY OF POROUS ZONES: (Show all important zones of porosity and contents thereof; cored intervals; and all drill-stem, tests, including depth interval tested, cushion used, time tool open, flowing and shut-in pressures, and recoveries):

FORMATION	TOP	BOTTOM	DESCRIPTION, CONTENTS, ETC.
			NO DST's run./

38. GEOLOGIC MARKERS

NAME	TOP MEAS. DEPTH	TOP TRUE VERT. DEPTH
Green River	1728'	1728'
Horse Bench S.S.	2345'	2345'
2nd Garden Gulch	4051'	4051'
Yellow Marker	4686'	4686'
Douglas Creek	4838'	4838'
2nd Douglas Crk.	5077'	5077'
Green Marker	5213'	5213'
Carbonate Marker	5730'	5730'

Form 3160-5
(June 1990)

UNITED STATES
DEPARTMENT OF THE INTERIOR
BUREAU OF LAND MANAGEMENT

FORM APPROVED
Budget Bureau No. 1004-0135
Expires: March 31, 1993

SUNDRY NOTICES AND REPORTS ON WELLS

Do not use this form for proposals to drill or to deepen or reentry to a different reservoir.
Use "APPLICATION FOR PERMIT—" for such proposals

5. Lease Designation and Serial No.
UTU-73086

6. If Indian, Allottee or Tribe Name
n/a

7. If Unit or CA, Agreement Designation
n/a

SUBMIT IN TRIPLICATE

1. Type of Well
[X] Oil Well [ ] Gas Well [ ] Other

8. Well Name and No.
Mon.Fed. #13-4-9-16

2. Name of Operator
EQUITABLE RESOURCES ENERGY COMPANY

9. API Well No.
#43-013-31716

3. Address and Telephone No.
1601 LEWIS AVENUE BILLINGS, MT 59102 (406)259-7860

10. Field and Pool, or Exploratory Area
Mon. Butte/Green River

4. Location of Well (Footage, Sec., T., R., M., or Survey Description)
NW SW Section 4, T9S, R16E
2050' FSL & 660' FNL

11. County or Parish, State
Duchesne County, Utah

12. CHECK APPROPRIATE BOX(s) TO INDICATE NATURE OF NOTICE, REPORT, OR OTHER DATA

TYPE OF SUBMISSION	TYPE OF ACTION	
[X] Notice of Intent	[ ] Abandonment	[ ] Change of Plans
[ ] Subsequent Report	[ ] Recompletion	[ ] New Construction
[ ] Final Abandonment Notice	[ ] Plugging Back	[ ] Non-Routine Fracturing
	[ ] Casing Repair	[ ] Water Shut-Off
	[ ] Altering Casing	[ ] Conversion to Injection
	[X] Other Site Security Diagram	[ ] Dispose Water (Note: Report results of multiple completion on Well Completion or Recompletion Report and Log form.)

13. Describe Proposed or Completed Operations (Clearly state all pertinent details, and give pertinent dates, including estimated date of starting any proposed work. If well is directionally drilled, give subsurface locations and measured and true vertical depths for all markers and zones pertinent to this work.)*

ATTACHED IS A SITE SECURITY DIAGRAM FOR THIS WELL.

14. I hereby certify that the foregoing is true and correct
Signed Bobbie Schuman Title REGULATORY SPECIALIST Date 3-25-97

(This space for Federal or State office use)

Approved by _____ Title _____ Date _____
Conditions of approval, if any:

Title 18 U.S.C. Section 1001, makes it a crime for any person knowingly and willfully to make to any department or agency of the United States any false, fictitious or fraudulent statements or representations as to any matter within its jurisdiction.

*See Instruction on Reverse Side

Form 3160-5
(June 1990)

UNITED STATES
DEPARTMENT OF THE INTERIOR
BUREAU OF LAND MANAGEMENT

FORM APPROVED
Budget Bureau No. 1004-0135
Expires: March 31, 1993

5. Lease Designation and Serial No.
UTU-73086

6. If Indian, Allottee or Tribe Name
n/a

7. If Unit or CA, Agreement Designation
n/a

SUNDRY NOTICES AND REPORTS ON WELLS

Do not use this form for proposals to drill or to deepen or reentry to a different reservoir.
Use "APPLICATION FOR PERMIT—" for such proposals

SUBMIT IN TRIPLICATE

1. Type of Well
[X] Oil Well [ ] Gas Well [ ] Other

8. Well Name and No.
Mon. Fed. #13-4-9-16

2. Name of Operator
EQUITABLE RESOURCES ENERGY COMPANY

9. API Well No.
#43-013-31716

3. Address and Telephone No.
1601 LEWIS AVENUE BILLINGS, MT 59102 (406)259-7860

10. Field and Pool, or Exploratory Area
Mon. Butte/Green River

4. Location of Well (Footage, Sec., T., R., M., or Survey Description)
NW SW Section 4, T9S, R16E
2050' FSL & 660' FNL

11. County or Parish, State
Duchesne County, Utah

12. CHECK APPROPRIATE BOX(s) TO INDICATE NATURE OF NOTICE, REPORT, OR OTHER DATA

TYPE OF SUBMISSION	TYPE OF ACTION	
[X] Notice of Intent	[ ] Abandonment	[ ] Change of Plans
[X] Subsequent Report	[ ] Recompletion	[ ] New Construction
[ ] Final Abandonment Notice	[ ] Plugging Back	[ ] Non-Routine Fracturing
	[ ] Casing Repair	[ ] Water Shut-Off
	[ ] Altering Casing	[ ] Conversion to Injection
	[X] Other Onshore Order #7	[ ] Dispose Water (Note: Report results of multiple completion on Well Completion or Recompletion Report and Log form.)

13. Describe Proposed or Completed Operations (Clearly state all pertinent details, and give pertinent dates, including estimated date of starting any proposed work. If well is directionally drilled, give subsurface locations and measured and true vertical depths for all markers and zones pertinent to this work.)*

Any water produced by this well will be held in a produced water tank and trucked to a commercial disposal facility. The primary facility to be used is the R.N. Industries produced water disposal facility located in Section 9, T2S, R2W in Duchesne County, Utah. A copy of the State-issued permit for that facility is on file at the Vernal Bureau of Land Management. If for some reason the operator is unable to use this primary disposal facility, the produced water will be trucked to another State-approved disposal facility. If applicable, Operator has received approved Right-of-Way access to this well location for the Vernal Bureau of Land Management.

14. I hereby certify that the foregoing is true and correct
Signed Debbie Schuman Title Regulatory Specialist Date 3-25-97

(This space for Federal or State office use)

Approved by _____ Title _____ Date _____
Conditions of approval, if any:

Title 18 U.S.C. Section 1001, makes it a crime for any person knowingly and willfully to make to any department or agency of the United States any false, fictitious or fraudulent statements or representations as to any matter within its jurisdiction.

*See Instruction on Reverse Side

EQUITABLE RESOURCES ENERGY COMPANY
Monument Federal 13-4-9-16
PRODUCTION FACILITY DIAGRAM

Monument Federal 13-4-9-16
NW SW SEC 4, T9S R16E
DUCHESNE COUNTY, UTAH
FEDERAL LEASE #UTU-73086

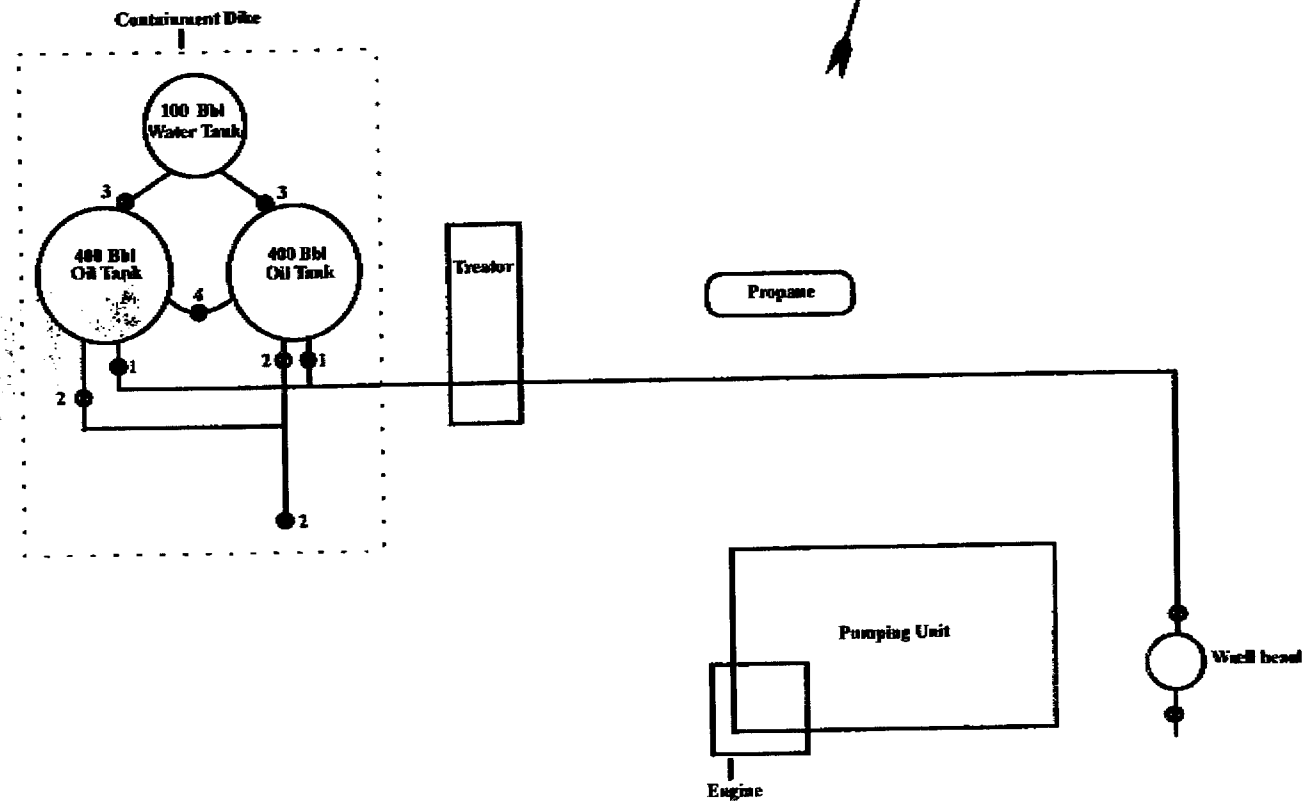

Valve Description			
	During Prod.	During Sale	During Water Drain
Valve #1	Open	Closed	Closed
Valve #2	Closed	Open	Closed
Valve #3	Closed	Closed	Open
Valve #4	Open	Closed	Closed

Diagram Not To Scale

PLAN LOCATED AT:
EQUITABLE RESOURCES ENERGY COMPANY
Western Region
1601 Lewis Avenue
Billings, MT 59102
(406) 259-7860

March 19, 1997

EREC, Western Region
DAILY OPERATING REPORT

MONUMENT FEDERAL #13-4-9-16
Location: NW SW Section 4, T9S, R16E
Duchesne County, Utah **---TIGHT HOLE---**
2050' FSL, 660' FNL
PTD: 6000' Formation: Green River
Prospect: Monument Butte
API #
Elevations: 5761.2' GL
Contractor: Union Drilling
Operator: EREC/Western Region
Spud: 2:00 PM, 1/6/97
Casing:

Tubing:

01/07/97 TD: 282' (282') Day 1
Present Operation: Wait On Cement
Wait on day light. MIRU. Drill rat hole & conductor hole, set same. Drill 12-1/4" hole to 282' and ran 8-5/8", J-55, 24# csg as follows:

Shoe	.90'
Shoe Joint	42.10'
Baffle Plate	0.00'
5 Joints Casing	210.30'
Total Casing Length	253.30'
Landing Joint	10.00'
Depth Landed	263.30' KB

Cemented 8-5/8" csg w/160 sxs "G" + 2% $CaCl_2$ + ¼#/sx Cello Flake. Wait on cement. Spud well @ 2:00 PM, 1-6-97. Plug down @ 2:40 AM, 1-7-97. 4 bbls cement returned to pit.
DC: $5,076 CC: $5,076

01/08/97 TD: 897' (615') Day 2
Present Operation: Drilling 7-7/8" hole
WOC. NU, drill cement & plug. Drill 615' of 7-7/8" hole. Ran one survey @ 600' - 1/2°.
DC: $11,070 CC: $16,146

01/09/97 TD: 2260' (1363') Day 3
Formation: Sand & Shale
Present Operation: Drilling 7-7/8" hole
Drill 1363' of 7-7/8" hole, service rig and ran 3 surveys: 1100' - 1/2°, 1630' - 1/2°, & 2150' - 3/4°.
DC: $24,534 CC: $40,680

01/10/97 TD: 3503' (1243') Day 4
Formation: Sand & Shale
Present Operation: Drilling 7-7/8" hole

Drilled 1243' of 7-7/8" hole, service rig, ran 2 surveys: 2650' - 1-1/4° and 3150' - 1-1/2°.
DC: $22,374 CC: $63,054

01/11/97 TD: 4260' (757') Day 5
Present Operation: Drilling 7-7/8" hole
Drill 7-7/8" hole from 3503' to 4131' on air and foam. Displaced hole w/fluid and circulated. TOOH w/bit #3. PU motor & bit #4, TIH. Reamed back to btm, drilled 7-7/8" hole w/fluid from 4131' to 4260'.
DC: $13,626 CC: $76,680

01/12/97 TD: 5155' (895') Day 6
Present Operation: Drilling 7-7/8" hole
Drilled 7-7/8" hole from 4260' to 5155' w/KCL wtr, serviced rig, ran survey @ 4900' - 1-3/4°.
DC: $16,110 CC: $92,790

01/13/97 TD: 5454' (299') Day 7
Present Operation: Thaw Kelly
Serviced rig, drilled 7-7/8" hole from 5155' to 5454' w/KCL fluid. Motor pressured up @ 5454' - TOOH, PU motor #2, TIH. Presently thawing kelly to circulate and drill 7-7/8" hole.
DC: $5,382 CC: $98,172

01/14/97 TD: 6000' (546') Day 8
Present Operation: Lay Down Motor
Drilled 546' of 7-7/8" hole from 5454' to 6000' w/KCL wtr. Repaired circulation pump, circulated hole @ TD. Lay down drill pipe and collars. Presently laying down motor. Ran one survey @ 5400' - 1-1/2°.
DC: $9,828 CC: $108,000

01/15/97 TD: 6000' (0') Day 9
Present Operation: Shut Down
Log well, circulate hole. Run 5-1/2", J-55, 15.5# csg as follows:

Shoe	.90'
Shoe Joint	42.58'
Float Collar	1.10'
140 jts csg	5914.75'
Total csg length	5959.33'
Landing jt	10.00'
Depth landed	5969.33'
PBTD	5924.75' KB

Cement csg w/lead = 275 sxs Pream Lite Plus + 10% gel + 6#/sx BA-91 + 2#/sx Kolseal + ¼#/sx Cello Flake .5% sodmet. Tail = 500 sxs 50/50 poz + ¼#/sx Cello Flake + 2#/sx Kolseal. Shut down. Wait on daylight to move. Plug down @ 5:00 PM. Release rig @ 9:00 PM.

01/21/97 Completion
RU BJ Services & frac 5281' - 5345' w/27,678 gasl 2% KCL gelled wtr, 27,000 lbs 20/40 mesh sand & 66,900 lbs 16/30 mesh sand. ATP = 2000 psi, ATR = 30.8 bpm,

ISIP = 1920 psi, 5 min = 1940 psi, 10 min = 1810 psi, 15 min = 1640 psi, 30 min = 1500 psi. Used 659 bbls wtr. Start forced closure flow back, .75 bpm. Flow back 214 bbls wtr. TIH w/retrieving tool, 2-3/8" x 4' sub, HD pkr, SN & 169 jts tbg. Tag sand @ 5252' KB. Circulate down to BP @ 5418' KB. Set pkr @ 5221' KB. Made 9 swab runs. Recovered 47 bbls wtr w/trace of sand, gas cut. Final fluid level @ 1500'. SWIFD.
DC: $38,071 CC: $160,473

01/22/97 Completion
Fluid level @ surface. Made 28 swab runs, recovered 31 bbls oil & 107 bbls wtr, good gas & trace sand. Oil 50% last 3 runs, no sand last 7 runs. Fluid level @ 2300' last 4 runs. Release pkr, tag sand @ 5409' KB. Circulate down to BP @ 5418' KB. Release BP. TOOH w/tbg, pkr & BP. TIH w/tbg string as follows:

	LENGTH	DEPTH KB
1 - Notched-pinned collar 2-7/8"	.40'	5411.61'
1 - jt 2-7/8" EUE J-55 8rd 6.5#	29.58'	5411.21'
1 - perf sub 2-7/8" x 4'	4.20'	5381.63'
1 - SN 2-7/8"	1.10'	5377.43'
5 - jts 2-7/8" EUE J-55 8rd 6.5#	155.30'	5376.33'
1 - tbg anchor 2-7/8" x 501/2 (TRICO)	2.75'	5221.03'
168 - jts 2-7/8" EUE J-55 8rd 6.5#	5208.28'	5218.28'
KB	10.00'	

SWIFD.
DC: $2,054 CC: $162,527

01/23/97 Completion
Set tbg anchor w/12" tension. ND BOP. ND 5-M well head, NU 3-M well head. TIH w/rod string as follows:

1 - DHP, 2-1/2" x 1-1/2" x 16' RHAC w/SM plunger (TRICO #1217)
1 - Pony 7/8" x 2' w/2-1/2" guide
1 - K-bar 1-1/2" x 25'
1 - Pony 7/8" x 2' w/2-1/2" guide
212 - ¾" x 25' D-61 Plain
1 - ¾" x 8' Pony
1 - ¾" x 6' Pony
1 - Polish Rod 1-1/4" x 22' SM

Pressure test DHP & tbg to 1000 psi, OK. SWI. RDMO.
DC: $15,006 CC: $177,533

02/04/97 Completion
Start well pumping. 5-1/4 SPM, 99" stroke.
DC: $29,589 CC: $207,122

Equitable Resources
Energy Company,
WESTERN REGION

1601 Lewis Avenue, Billings, MT 59102

FAX

Date: 8-26-97

No. of pages including cover sheet: 10

To: Kristin

Phone:

Fax::

CC:

From: Molly.

Phone: (406) 259-7860, Ext.

Fax (406) 245-1~~865~~ 1361

REMARKS: ☐ Urgent ☐ For your review ☐ Reply ASAP ☐ Please comment

Missing completion report you requested.

The information contained in this facsimile message is privileged and confidential and is intended only for the use of the individual(s) or entity name above who has been specifically authorized to receive it. If the reader is not the intended recipient, you are hereby notified that any dissemination, distribution or copying of this communication is strictly prohibited. If you have received this communication in error, please notify us immediately by telephone and return all pages to the address shown above. Thank you.

RECEIVED
OCT 10 1997

Inland
RESOURCES INC.

October 7, 1997

Bureau of Land Management
Vernal District Office
170 South 500 East
Vernal, UT 84078

RE: Change of Operator
Duchesne & Vernal Counties, Utah

Dear Mr. Forsman:

Please find attached Sundry Notices and Reports on Wells for Change of Operator, previously operated by Equitable Resources Energy Company for approval.

If you should have questions regarding this matter, please do not hesitate to contact me at the number listed below.

Sincerely,

INLAND PRODUCTION COMPANY

Patsy Bareau

Patsy Bareau

/pb
encls.

RECEIVED
OCT 20 1997
DIV. OF OIL, GAS & MINING

475 Seventeenth Street, Suite 1500, Denver, CO 80202 • 303-292-0900 • FAX 303-296-4070

FORM 9

STATE OF UTAH

DIVISION OF OIL, GAS AND MINING

SUNDRY NOTICES AND REPORTS ON WELLS

Do not use this form for proposals to drill new wells, deepen existing wells, or to reenter plugged and abandoned wells. Use APPLICATION FOR PERMIT TO DRILL OR DEEPEN form for such proposals.

5. Lease Designation and Serial Number: See Attached

6. If Indian, Allottee or Tribe Name: n/a

7. Unit Agreement Name: See Attached

8. Well Name and Number: See Attached

9. API Well Number: See Attached

10. Field and Pool, or Wildcat: See Attached

1. Type of Well: OIL [X] GAS [ ] OTHER:

RECEIVED OCT 13 1997

2. Name of Operator: Inland Production Company

3. Address and Telephone Number: 475 - 17th Street, Suite 1500, Denver, CO 80202

4. Location of Well

Footages: See Attached Exhibit

County:

QQ, Sec.,T.,R.,M.:

State:

11. CHECK APPROPRIATE BOXES TO INDICATE NATURE OF NOTICE, REPORT, OR OTHER DATA

NOTICE OF INTENT (Submit In Duplicate)

- [ ] Abandon
- [ ] New Construction
- [ ] Repair Casing
- [ ] Pull or Alter Casing
- [ ] Change of Plans
- [ ] Recomplete
- [ ] Convert to Injection
- [ ] Reperforate
- [ ] Fracture Treat or Acidize
- [ ] Vent or Flare
- [ ] Multiple Completion
- [ ] Water Shut-Off
- [X] Other Change of Operator

Approximate date work will start _____

SUBSEQUENT REPORT (Submit Original Form Only)

- [ ] Abandon *
- [ ] New Construction
- [ ] Repair Casing
- [ ] Pull or Alter Casing
- [ ] Change of Plans
- [ ] Reperforate
- [ ] Convert to Injection
- [ ] Vent or Flare
- [ ] Fracture Treat or Acidize
- [ ] Water Shut-Off
- [X] Other Change of Operator

Date of work completion 9-30-97

Report results of Multiple Completions and Recompletions to different reservoirs on WELL COMPLETION OR RECOMPLETION REPORT AND LOG form.

* Must be accompanied by a cement verification report.

12. DESCRIBE PROPOSED OR COMPLETED OPERATIONS (Clearly state all pertinent details, and give pertinent dates. If well is directionally drilled, give subsurface locations and measured and true vertical depths for all markers and zones pertinent to this work.)

Effective September 30, 1997, Inland Production Company will take over operations of the wells on the attached list. The previous operator was :

Equitable Resources Energy Company
1601 Lewis Avenue
Billings, MT 59102

Effective September 30, 1997, Inland Production Company is responsible under the terms and conditions of the leases for operations conducted on the leased lands or a portion thereof under State of Utah Statewide Bond No. 4471291.

RECEIVED OCT 16 1997

13. Name & Signature: Chris A. Potter Title: CHRIS A. POTTER, ATTORNEY-IN-FACT Date: 9/30/97

(This space for State use only)

(See Instructions on Reverse Side)

Inland Resources Change of Operator

WELL NAME	LOCATION	COUNTY	ST	FIELD NAME	API NUMBER	LEASE NO.	AGEEMENT
WALTON FEDERAL #1	SESE 119S 16E	DUCHESNE	UT	MONUMENT BUTTE (J)	43-013-15792-00	UTU096550	UTU72086A
WALTON FEDERAL #2	NWNE 149S 16E	DUCHESNE	UT	MONUMENT BUTTE (J)	43-013-15793-00	UTU096550	UTU72086A
WALTON FEDERAL #34-11	SWSE 119S 16E	DUCHESNE	UT	MONUMENT BUTTE (J)	43-013-31003-00	UTU096550	UTU72086A
WALTON FEDERAL #4	SENW 119S 16E	DUCHESNE	UT	MONUMENT BUTTE (J)	43-013-15795-00	UTU096550	UTU72086A
ALLEN FEDERAL #31-6G	NWNE 6 9S 17E	DUCHESNE	UT	MONUMENT BUTTE (U)	43-013-31442-00	UTU020252A	
BALCRON FEDERAL #21-13Y	NENW 139S 16E	DUCHESNE	UT	MONUMENT BUTTE (U)	43-013-31400-00	UTU64805	
BALCRON FEDERAL #21-25Y	NENW 259S 16E	DUCHESNE	UT	MONUMENT BUTTE (U)	43-013-31394-00	UTU64380	
BALCRON FEDERAL #44-14Y	SESE 149S 17E	UINTAH	UT	MONUMENT BUTTE (U)	43-047-32438-00	UTU64806	
CASTLE PEAK FEDERAL #24-10A	SESW 169S 16E	DUCHESNE	UT	MONUMENT BUTTE (U)	43-013-30555-00	UTU72107	
CASTLE PEAK STATE #43-16	NESE 169S 16E	DUCHESNE	UT	MONUMENT BUTTE (U)	43-013-30594-00		891008243C
K. JORGENSON STATE #16-4	NESE 169S 17E	DUCHESNE	UT	MONUMENT BUTTE (U)	43-013-30572-00	ML-3453-B	
STATE #16-2	NENE 169S 17E	DUCHESNE	UT	MONUMENT BUTTE (U)	43-013-30552-00	ML-3453-B	
BALCRON FEDERAL #21-9Y	NENW 9 9S 16E	DUCHESNE	UT	MONUMENT BUTTE (W)	43-013-31396-00	UTU65207	
BALCRON FEDERAL #41-21Y	NENE 219S 16E	DUCHESNE	UT	MONUMENT BUTTE (W)	43-013-31392-00	UTU64379	
MONUMENT FEDERAL #31-6-9-16	NWNE 6 9S 16E	DUCHESNE	UT	MONUMENT BUTTE (W)	43-013-31717-00	UTU74390	
MONUMENT FEDERAL #32-6-9-16Y	SW NE 6 9S 16E	DUCHESNE	UT	MONUMENT BUTTE (W)	43-013-31300-00	UTU74390	
MONUMENT FEDERAL #42-6-9-16Y	SE NW 6 9S 15E	DUCHESNE	UT	MONUMENT BUTTE (W)	43-013-31645-00	UTU74390	
MONUMENT FEDERAL #41-6-9-16	NENE 6 9S 16E	DUCHESNE	UT	MONUMENT BUTTE (W)	43-013-31718-00	UTU74390	
MONUMENT FEDERAL #31-8-9-16	NW NE 8 9S 16E	DUCHESNE	UT	MONUMENT BUTTE (W)	43-013-31721-00	UTU020255	
MONUMENT FEDERAL #41-8-9-16	NENE 8 9S 16E	DUCHESNE	UT	MONUMENT BUTTE (W)	43-013-31619-00	UTU020255	
MONUMENT FEDERAL #11-9-9-16	NW NW 9 9S 16E	DUCHESNE	UT	MONUMENT BUTTE (W)	43-013-31618-00	UTU020254	
MONUMENT FEDERAL #33-6-9-16Y	NW SE 6 9S 16E	DUCHESNE	UT	MONUMENT BUTTE (W)	43-013-31589-00	UTU74390	
MONUMENT FEDERAL #43-6-9-16Y	NE SE 6 9S 16E	DUCHESNE	UT	MONUMENT BUTTE (W)	43-013-31644-00	UTU74390	
MONUMENT FEDERAL #44-6-9-16Y	SE SE 6 9S 15E	DUCHESNE	UT	MONUMENT BUTTE (W)	43-013-31720-00	UTU74390	
MONUMENT FEDERAL #31-18-9-16	NW NE 189S 16E	DUCHESNE	UT	MONUMENT BUTTE (W)	43-013-31725-00	UTU74390	
MONUMENT FEDERAL #41-18Y	NE NE 189S 16E	DUCHESNE	UT	MONUMENT BUTTE (W)	43-013-31646-00	UTU74390	
MONUMENT FEDERAL #42-18Y	SE NE 189S 16E	DUCHESNE	UT	MONUMENT BUTTE (W)	43-013-31724-00	UTU74390	
MONUMENT FEDERAL #31-21-9-16	NW NE 219S 16E	DUCHESNE	UT	MONUMENT BUTTE (W)	43-013-31726-00	UTU64379	
MONUMENT FEDERAL #11-22Y	NW NW 229S 16E	DUCHESNE	UT	MONUMENT BUTTE (W)	43-013-31647-00	UTU64379	
MONUMENT FEDERAL #13-4-9-16	NW SW 4 9S 16E	DUCHESNE	UT	MONUMENT BUTTE (W)	43-013-31716-00	UTU73086	
MONUMENT FEDERAL #14-4	SWSW 4 9S 16E	DUCHESNE	UT	MONUMENT BUTTE (W)	43-013-31666-00	UTU73086	
MONUMENT FEDERAL #22-20-9-16	SE NW 209S 16E	DUCHESNE	UT	MONUMENT BUTTE (W)	43-013-31681-00	UTU52018	
MONUMENT FEDERAL #23-7-9-16	NESW 7 9S 16E	DUCHESNE	UT	MONUMENT BUTTE (W)	43-013-31694-00	UTU74390	
MONUMENT FEDERAL #24-17-9-16	SESW 179S 16E	DUCHESNE	UT	MONUMENT BUTTE (W)	43-013-31682-00	UTU52018	
MONUMENT BUTTE #34-31-8-16	SW SE 318S 16E	DUCHESNE	UT	MONUMENT BUTTE (W)	43-013-31715-00	UTU74389	
MONUMENT FEDERAL #33-10-9-16	NW SE 109S 16E	DUCHESNE	UT	MONUMENT BUTTE (W)	43-013-31722-00	UTU72107	
MONUMENT BUTTE #43-10-9-16	NE SE 109S 16E	DUCHESNE	UT	MONUMENT BUTTE (W)	43-013-31723-00	UTU72107	
CHORNEY FEDERAL #1-9	SWSE 9 9S 19E	UINTA	UT	PARIETTE BENCH	43-047-30070-00	UTU5843	
HENDEL FEDERAL #1	SWSW 9 9S 19E	UINTA	UT	PARIETTE BENCH	43-047-20011-00	UTU058149	

United States Department of the Interior

BUREAU OF LAND MANAGEMENT
Vernal District Office
170 South 500 East
Vernal, Utah 84078-2799

Phone: (801) 781-4400
Fax: (801) 781-4410

IN REPLY REFER TO:
3162.3
UT08438

December 4, 1997

Inland Production Company
475 17th Street, Suite 1500
Denver, CO 80202

43-013-31716

Re: Well No. Monument Fed. 13-4-9-16
NWSW, Sec. 4, T9S, R16E
Lease U-73086
Duchesne County, Utah

Dear Sir:

This correspondence is in regard to the self-certification statement submitted requesting a change in operator for the referenced well. After a review by this office, the change in operator request is approved. Effective immediately, Inland Production Company is responsible for all operations performed on the referenced well. All liability will now fall under your bond, BLM Bond No. UT0056, for all operations conducted on the referenced well on the leased land.

If you have any other questions concerning this matter, please contact Margie Herrmann or Pat Sutton of this office at (435) 781-4400.

Sincerely,

Howard B. Cleavinger II
Assistant Field Manager,
Minerals Resources

cc: Division of Oil, Gas & Mining
Equitable Resources Energy Company

EQUITABLE RESOURCES
ENERGY COMPANY
WESTERN REGION
(406) 259-7860 Telephone
(406) 245-1361 Fax

December 10, 1997

Lisha
State of Utah
Division of Oil, Gas and Mining
1594 West North Temple, Suite 1210
Box 145801
Salt Lake City, UT 84114-5801

Dear Lisha:

RE: Equitable Sale of Utah Properties

Effective September 30, 1997, Equitable Resources Energy Company sold all of its Utah properties to Inland Production Company.

Please feel free to contact me if you require additional information.

Sincerely,

Molly Conrad

Molly Conrad
Agent for Equitable Resources
Energy Company

/mc

Crazy Mountain Oil & Gas Services
P.O. Box 577
Laurel, MT 59044
(406) 628-4164
(406) 628-4165

TO: Lisha
St of Utah.

FROM. Molly Conrad
Crazy Mountain Oil & Gas Services
(406) 628-4164

Pages Attached - Including Cover Sheet 2.

NOTE: Here is the letter you requested. Call if you need anything further.

Division of Oil, Gas and Mining

OPERATOR CHANGE WORKSHEET

Routing:	
1-LEC	6-LEC
2-GLH	7-KAS
3-DTS	8-SI
4-VLD	9-FILE
5-JRB	

Attach all documentation received by the division regarding this change.
Initial each listed item when completed. Write N/A if item is not applicable.

☒ Change of Operator (well sold) ☐ Designation of Agent
☐ Designation of Operator ☐ Operator Name Change Only

The operator of the well(s) listed below has changed, **effective:** 9-30-97

TO: (new operator) INLAND PRODUCTION COMPANY
(address) PO BOX 1446
ROOSEVELT UT 84066
Phone: (801)722-5103
Account no. N5160

FROM: (old operator) EQUITABLE RESOURCES ENERGY
(address) PO BOX 577
LAUREL MT 59044
C/O CRAZY MTN O&G SERVICES
Phone: (406)628-4164
Account no. N9890

WELL(S) attach additional page if needed:

Name:	API:	Entity:	S	T	R	Lease:
SEE ATTACHED	43-013-31716					

OPERATOR CHANGE DOCUMENTATION

Lec 1. (r649-8-10) Sundry or other legal documentation has been received from the **FORMER** operator (attach to this form). (Rec'd 12-10-97)

Lec 2. (r649-8-10) Sundry or other legal documentation has been received from the **NEW** operator (Attach to this form). (Rec'd 10-20-97)

N/A 3. **The Department of Commerce** has been contacted if the new operator above is not currently operating any wells in Utah. Is the company **registered with the state?** (yes/no) _____ If yes, show company file number: _____.

Lec 4. **FOR INDIAN AND FEDERAL WELLS ONLY.** The BLM has been contacted regarding this change. Make note of BLM status in comments section of this form. BLM approval of **Federal** and **Indian** well operator changes should ordinarily take place prior to the division's approval, and before the completion of steps 5 **through 9** below.

Lec 5. Changes have been entered in the **Oil and Gas Information System** (3270) for each well listed above. (12-9-97)

Lec 6. **Cardex** file has been updated for each well listed above. (12-10-97)

Lec 7. **Well file labels** have been updated for each well listed above. (12-10-97)

Lec 8. Changes have been included on the monthly "Operator, Address, and Account Changes" **memo** for distribution to Trust Lands, Sovereign Lands, UGS, Tax Commission, etc. (12-9-97)

Lec 9. A folder has been set up for the **Operator Change file,** and a copy of this page has been placed there for reference during routing and processing of the original documents.

OPERATOR CHANGE WORKSHEET (continued) - Initial each item when completed. Write N/A if item is not applicable.

ENTITY REVIEW

Yes 1. (r649-8-7) **Entity assignments have been reviewed** for all wells listed above. Were entity changes made? (yes/no) ____ If entity assignments were changed, attach copies of Form 6, Entity Action Form.

N/A 2. Trust Lands, Sovereign Lands, Tax Commission, etc., have been **notified** through normal procedures of entity changes.

BOND VERIFICATION - (FEE WELLS ONLY)

N/A/Yes 1. (r649-3-1) The **NEW** operator of any fee lease well listed above has furnished a proper bond.

___ 2. A **copy of this form** has been placed in the new and former operator's bond files.

___ 3. The **FORMER** operator has requested a release of liability from their bond (yes/no) _____, as of today's date _____. If yes, division response was made to this request by letter dated _____.

LEASE INTEREST OWNER NOTIFICATION OF RESPONSIBILITY

N/A 1. Copies of documents have been sent on _____ to _____ at Trust Lands for changes involving State leases, in order to remind that agency of their responsibility to review for proper bonding.
DT 5, 12/10/97

N/A 2. (r649-2-10) The former operator of any fee lease wells listed above has been contacted and informed by letter dated _____ 19 __, of their responsibility to notify all interest owners of this change.

FILMING

✓ 1. All attachments to this form have been **microfilmed**. Today's date: 3.9.98.

FILING

___ 1. **Copies** of all attachments to this form have been filed in each **well file**.

___ 2. The **original of this form**, and the **original attachments** are now being filed in the Operator Change file.

COMMENTS

971209 BLM / Vernal Aprv 12-4-97.

FORM 3160-5
(June 1990)

UNITED STATES
DEPARTMENT OF THE INTERIOR
BUREAU OF LAND MANAGEMENT

FORM APPROVED
Budget Bureau No. 1004-0135
Expires: March 31, 1993

SUNDRY NOTICES AND REPORTS ON WELLS

Do not use this form for proposals to drill or to deepen or reentry a different reservoir.
Use "APPLICATION FOR PERMIT -" for such proposals

SUBMIT IN TRIPLICATE

5. Lease Designation and Serial No.
UTU-73086

6. If Indian, Allottee or Tribe Name
NA

7. If Unit or CA, Agreement Designation
NA

1. Type of Well
[X] Oil Well [ ] Gas Well [ ] Other

8. Well Name and No.
MONUMENT FEDERAL 13-4-9-16

9. API Well No.
43-013-31716

2. Name of Operator
INLAND PRODUCTION COMPANY

10. Field and Pool, or Exploratory Area
MONUMENT BUTTE

3. Address and Telephone No.
475 17TH STREET, SUITE 1500, DENVER, COLORADO 80202 (303) 292-0900

11. County or Parish, State
DUCHESNE COUNTY, UTAH

4. Location of Well (Footage, Sec., T., R., m., or Survey Description)
2050 FSL 0660 FWL NW/SW Section 4, T09S R16E

12. **CHECK APPROPRIATE BOX(s) TO INDICATE NATURE OF NOTICE, REPORT, OR OTHER DATA**

TYPE OF SUBMISSION	TYPE OF ACTION	
[ ] Notice of Intent	[ ] Abandonment	[ ] Change of Plans
[X] Subsequent Report	[ ] Recompletion	[ ] New Construction
[ ] Final Abandonment Notice	[ ] Plugging Back	[ ] Non-Routine Fracturing
	[ ] Casing Repair	[ ] Water Shut-Off
	[ ] Altering Casing	[ ] Conversion to Injection
	[X] Other **Site Security**	[ ] Dispose Water
		(Note: Report results of multiple completion on Well Completion or Recompletion Report and Log form.)

13. Describe Proposed or Completed Operations (Clearly state all pertinent details, and give pertinent dates, including estimated date of starting any proposed work. If well is directionally drilled, give subsurface locations and measured and true vertical depths for all markers and zones pertinent to this work.)*

Attached please find the site security diagram for the above referenced well.

RECEIVED
OCT 13 1998
DIV. OF OIL, GAS & MINING

14. I hereby certify that the foregoing is true and correct
Signed Lisha A. Knight Title Manager, Regulatory Compliance Date 10/8/98

(This space for Federal or State office use)
Approved by _____ Title _____ Date _____
Conditions of approval, if any:
CC: UTAH DOGM

Title 18 U.S.C. Section 1001, makes it a crime for any person knowingly and willfully to make to any department or agency of the United States any false, fictitious or fradulent statements or representations as to any matter within its jurisdiction.

Inland Production Company
Site Facility Diagram

Monument Butte Federal 13-4

NW/SW Sec. 4, T9S, 16E

Duchesne County

July 28, 1998

Site Security Plan is held at the Roosevelt Office, Roosevelt Utah

Production Phase:

1) Valves 1 and 3 sealed closed

2) Valves 2 and 4 sealed open

Sales Phase:

1) Valves 1, 2, 4, sealed closed

2) Valves 1 open

Draining Phase:

1) Valve 3 open

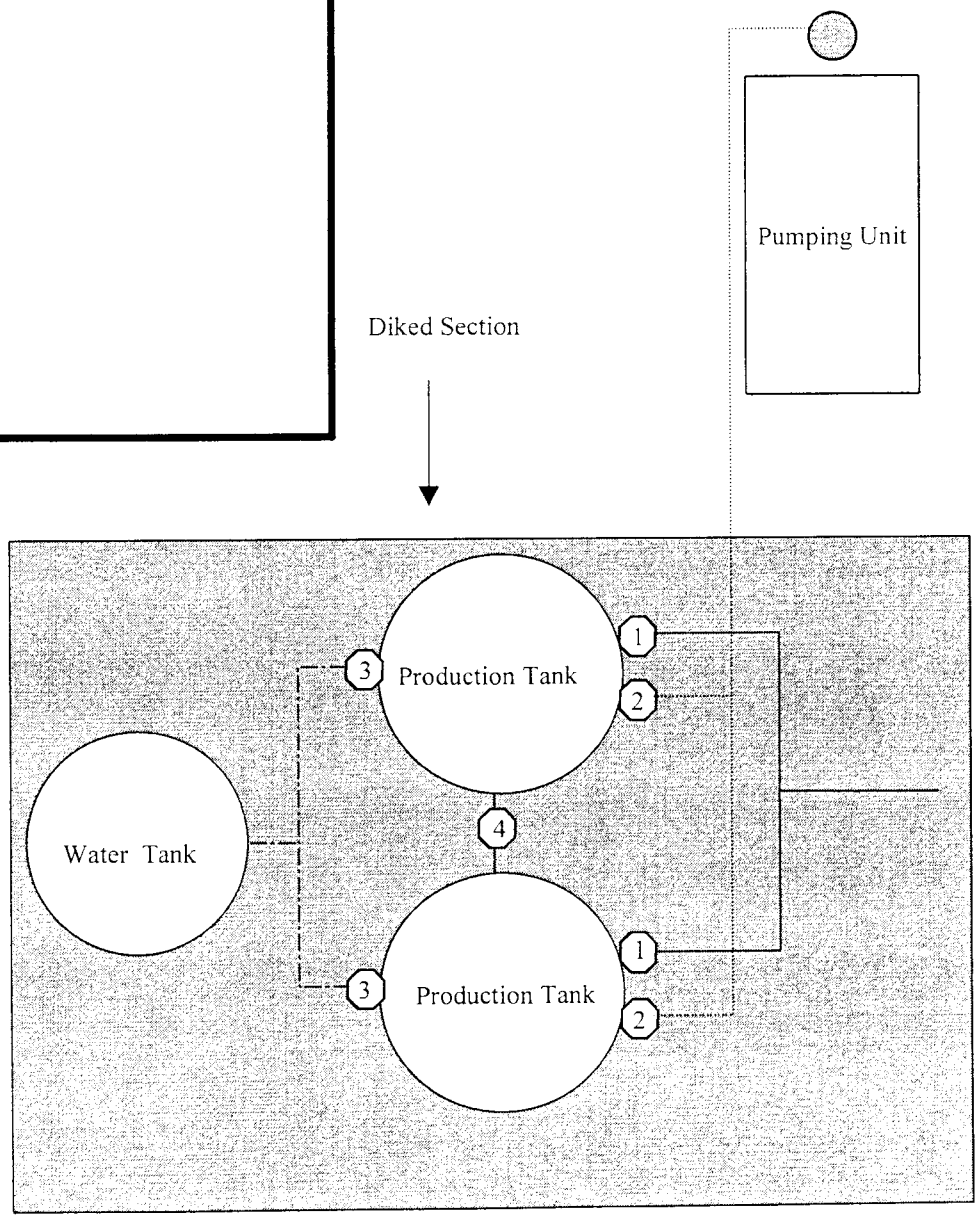

Emulsion Line .....

Load Line ————————

Water Line —·—·—·—·—·

United States Department of the Interior

BUREAU OF LAND MANAGEMENT
Utah State Office
P.O. Box 45155
Salt Lake City, UT 84145-0155
http://www.blm.gov

TAKE PRIDE IN AMERICA

IN REPLY REFER TO:
3106
(UT-924)

September 16, 2004

Memorandum

To: Vernal Field Office

From: Acting Chief, Branch of Fluid Minerals

Subject: Merger Approval

Attached is an approved copy of the name change recognized by the Utah State Office. We have updated our records to reflect the merger from Inland Production Company into Newfield Production Company on September 2, 2004.

Michael Coulthard
Acting Chief, Branch of
Fluid Minerals

Enclosure
1. State of Texas Certificate of Registration

cc: MMS, Reference Data Branch, James Sykes, PO Box 25165, Denver CO 80225
State of Utah, DOGM, Attn: Earlene Russell, PO Box 145801, SLC UT 84114
Teresa Thompson
Joe Incardine
Connie Seare

Corporations Section
P.O.Box 13697
Austin, Texas 78711-3697

Geoffrey S. Connor
Secretary of State

Office of the Secretary of State

The undersigned, as Secretary of State of Texas, does hereby certify that the attached is a true and correct copy of each document on file in this office as described below:

Newfield Production Company
Filing Number: 41530400

Articles of Amendment September 02, 2004

In testimony whereof, I have hereunto signed my name officially and caused to be impressed hereon the Seal of State at my office in Austin, Texas on September 10, 2004.

Secretary of State

ARTICLES OF AMENDMENT
TO THE
ARTICLES OF INCORPORATION
OF
INLAND PRODUCTION COMPANY

FILED
In the Office of the
Secretary of State of Texas

SEP 02 2004

Corporations Section

Pursuant to the provisions of Article 4.04 of the Texas Business Corporation Act (the "TBCA"), the undersigned corporation adopts the following articles of amendment to the articles of incorporation:

ARTICLE 1 – Name

The name of the corporation is Inland Production Company.

ARTICLE 2 – Amended Name

The following amendment to the Articles of Incorporation was approved by the Board of Directors and adopted by the shareholders of the corporation on August 27, 2004.

The amendment alters or changes Article One of the Articles of Incorporation to change the name of the corporation so that, as amended, Article One shall read in its entirety as follows:

"ARTICLE ONE – The name of the corporation is Newfield Production Company."

ARTICLE 3 – Effective Date of Filing

This document will become effective upon filing.

The holder of all of the shares outstanding and entitled to vote on said amendment has signed a consent in writing pursuant to Article 9.10 of the TBCA, adopting said amendment, and any written notice required has been given.

IN WITNESS WHEREOF, the undersigned corporation has executed these Articles of Amendment as of the 1st day of September, 2004.

INLAND RESOURCES INC.

By: Susan G. Riggs
Susan G. Riggs, Treasurer

UTSL-
071572A
065914

UTU-

02458
03563
03563A
04493
05843
07978
09803
017439B
017985
017991
017992
018073
019222
020252
020252A
020254
020255
020309D
022684A
027345
034217A
035521
035521A
038797
058149
063597A
075174
096547
096550

10760
11385
13905
15392

15855
16535
16539
16544
17036
17424
18048
18399
19267
26026A
30096
30103
31260
33992
34173
34346
36442
36846
38411
38428
38429
38431
39713
39714
40026
40652
40894
41377
44210
44426
44430
45431
47171
49092
49430
49950
50376
50385
50376
50750
51081
52013
52018
58546

61052
62848
63073B
63073D
63073E
63073O
64917
64379
64380
64381
64805
64806
64917
65207
65210
65635
65967
65969
65970
66184
66185
66191
67168
67170
67208
67549
67586
67845
68105
68548
68618
69060
69061
69744
70821
72103
72104
72105
72106
72107
72108
73086
73087
73807

73088
73089
73520A
74108
74805
74806
74807
74808
74389
74390
74391
74392
74393
74398
74399
74400
74404
74405
74406
74411
74805
74806
74826
74827
74835
74868
74869
74870
74872
74970
75036
75037
75038
75039
75075
75078
75089
75090
75234
75238
76239
76240
76241
76560

76561
76787
76808
76813
76954
76956
77233
77234
77235
77337
77338
77339
77357
77359
77365
77369
77370
77546
77553
77554
78022
79013
79014
79015
79016
79017
79831
79832
79833
79831
79834
80450
80915
81000

63073X
63098A
68528A
72086A
72613A
73520X
74477X
75023X
76189X
76331X
76788X
77098X
77107X
77236X
77376X
78560X
79485X
79641X
80207X
81307X

FORM 3160-5
(September 2001)

UNITED STATES
DEPARTMENT OF THE INTERIOR
BUREAU OF LAND MANAGEMENT

FORM APPROVED
OMB No. 1004-0135
Expires January 31,2004

SUNDRY NOTICES AND REPORTS ON WELLS

Do not use this form for proposals to drill or to re-enter an abandoned well. Use Form 3160-3 (APD) for such proposals.

SUBMIT IN TRIPLICATE - Other instructions on reverse side.

5. Lease Serial No.
UTU73086

6. If Indian, Allottee or Tribe Name.

7. If Unit or CA/Agreement, Name and/or No.
S WELLS DRAW UNIT

1. Type of Well
☒ Oil Well ☐ Gas Well ☐ Other

8. Well Name and No.
MONUMENT FED 13-4-9-16

2. Name of Operator
Newfield Production Company

9. API Well No.
4301331716

3a. Address Route 3 Box 3630
Myton, UT 84052

3b. Phone No. *(include are code)*
435.646.3721

10. Field and Pool, or Exploratory Area
Monument Butte

4. Location of Well *(Footage, Sec., T., R., M., or Survey Description)*
2050 FSL 0660 FWL
NW/SW Section 4 T9S R16E

11. County or Parish, State
Duchesne,UT

12. CHECK APPROPRIATE BOX(ES) TO INIDICATE NATURE OF NOTICE, OR OTHER DATA

TYPE OF SUBMISSION	TYPE OF ACTION			
☐ Notice of Intent	☐ Acidize	☐ Deepen	☐ Production(Start/Resume)	☐ Water Shut-Off
☒ Subsequent Report	☐ Alter Casing	☐ Fracture Treat	☐ Reclamation	☐ Well Integrity
☐ Final Abandonment Notice	☐ Casing Repair	☐ New Construction	☐ Recomplete	☒ Other Weekly Status Report
	☐ Change Plans	☐ Plug & Abandon	☐ Temporarily Abandon	
	☐ Convert to Injector	☐ Plug Back	☐ Water Disposal	

13. Describe Proposed or Completed Operation (clearly state all pertinent details, including estimated starting date of any proposed work and approximate duration thereof. If the proposal is to deepen directionally or recomplete horizontally, give subsurface locations and measured and true vertical depths of all pertinent markers and zones. Attach the Bond under which the work will be performed or provide the Bond No. on file with BLM/BIA. Required subsequent reports shall be filed within 30 days following completion of the involved operations. If the operation results in a multiple completion or recompletion in a new interval, a Form 3160-4 shall be filed once testing has been completed. Final Abandonment Notices shall be filed only after all requirements, including reclamation, have been completed, and the operator has determined that the site is ready for final inspection.)

Subject well had recompletion procedures initiated in the Green River formation on 02/04/05. Existing production equipment was pulled from well. A bit and scraper were run in well. Three new Green River intervals were perforated and hydraulically fracture treated as follows: Stage #1: CP1 & CP .5 sands @ 5816-5821', 5808-5811', 5741-5751' (All 4 JSPF) fraced down 2 7/8" N-80 tubing w/ 49,276# 20/40 sand in 408 bbls Lightning 17 frac fluid. Stage #2: B1 sands @ 5130-5136', 5120-5125', (All 4 JSPF) fraced down 5 1/2" 15.5# casing w/40,000# 20/40 sand in 380 bbls Lightning 17 frac fluid. Stage #3: GB6 sands @ 4390-4400' (4 JSPF) fraced down 5 1/2" 15.5 # casing w/ 25,402# 20/40 sand in 268 bbls Lightning 17 frac fluid. Fracs were flowed back through chokes. Sand was cleaned from wellbore. New intervals were swab tested for sand cleanup. BHA & production tbg were run and anchored in well w/tubing anchor @ 5703', pump seating nipple @ 5771', and end of tubing string @ 5835'. A new 1 1/2" bore rod pump was run in well on sucker rods. Well returned to production via rod pump on 02/14/05.

I hereby certify that the foregoing is true and correct
Name *(Printed/ Typed)*
Tara Kinney

Title
Production Clerk

Signature Tara Kinney

Date
2/16/2005

THIS SPACE FOR FEDERAL OR STATE OFFICE USE

Approved by

Title

Date

Conditions of approval, if any, are attached. Approval of this notice does not warrant or certify that the applicant holds legal or equitable title to those rights in the subject lease which would entitle the applicant to conduct operations thereon.

Office

Title 18 U.S.C. Section 1001 and Title 43 U.S.C. Section 1212, make it a crime for any person knowingly and willfully to make to any department or agency of the United States any false, fictitious and fraudulent statements or representations as to any matter within its jurisdiction

(Instructions on reverse)

RECEIVED
FEB 22 2005
DIV. OF OIL, GAS & MINING

Division of Oil, Gas and Mining

OPERATOR CHANGE WORKSHEET

ROUTING
1. GLH
2. CDW
3. FILE

Change of Operator (Well Sold) — Designation of Agent/Operator

X Operator Name Change — **Merger**

The operator of the well(s) listed below has changed, effective: **9/1/2004**

FROM: (Old Operator):	**TO:** (New Operator):
N5160-Inland Production Company	N2695-Newfield Production Company
Route 3 Box 3630	Route 3 Box 3630
Myton, UT 84052	Myton, UT 84052
Phone: 1-(435) 646-3721	Phone: 1-(435) 646-3721

CA No. **Unit:** **SOUTH WELLS DRAW (GR)**

WELL(S)

NAME	SEC	TWN	RNG	API NO	ENTITY NO	LEASE TYPE	WELL TYPE	WELL STATUS
S WELLS DRAW 15-34-8-16	34	080S	160E	4301331670	13269	Federal	WI	A
CASTLE PEAK 1-3	03	090S	160E	4301330639	13269	Federal	WI	A
S WELLS DRAW 4-3-9-16	03	090S	160E	4301332096	13269	Federal	OW	P
BALCRON MON FED 14-4	04	090S	160E	4301331666	13269	Federal	WI	A
MON FED 13-4-9-16	04	090S	160E	4301331716	13269	Federal	OW	P
CASTLE PEAK 9R	05	090S	160E	4301315787	99998	Federal	NA	PA
MON FED 41-8-9-16	08	090S	160E	4301331619	13269	Federal	WI	A
MON FED 31-8-9-16	08	090S	160E	4301331721	13269	Federal	OW	P
FEDERAL 21-9Y	09	090S	160E	4301331396	13269	Federal	WI	A
MON FED 11-9-9-16	09	090S	160E	4301331618	13269	Federal	OW	P
S WELLS DRAW 9-9-9-16	09	090S	160E	4301332043	13269	Federal	WI	A
S WELLS DRAW 16-9-9-16	09	090S	160E	4301332044	13269	Federal	OW	P
CASTLE PK FED 24-10A	10	090S	160E	4301330555	13269	Federal	OW	P
MON FED 33-10-9-16	10	090S	160E	4301331722	13269	Federal	OW	P
MON FED 43-10-9-16	10	090S	160E	4301331723	13269	Federal	WI	A
S WELLS DRAW 2-10-9-16	10	090S	160E	4301331774	13269	Federal	OW	P
S WELLS DRAW 5-10-9-16	10	090S	160E	4301331811	13269	Federal	WI	A
S WELLS DRAW 6-10-9-16	10	090S	160E	4301332041	13269	Federal	OW	P
S WELLS DRAW 7-10-9-16	10	090S	160E	4301332042	13269	Federal	WI	A
S WELLS DRAW 11-10-9-16	10	090S	160E	4301332045	13269	Federal	WI	A
S WELLS DRAW 12-10-9-16	10	090S	160E	4301332046	13269	Federal	OW	P
S WELLS DRAW 13-10-9-16	10	090S	160E	4301332047	13269	Federal	OW	S

OPERATOR CHANGES DOCUMENTATION

Enter date after each listed item is completed

1. (R649-8-10) Sundry or legal documentation was received from the **FORMER** operator on: 9/15/2004
2. (R649-8-10) Sundry or legal documentation was received from the **NEW** operator on: 9/15/2004
3. The new company was checked on the **Department of Commerce, Division of Corporations Database on:** 2/23/2005
4. Is the new operator registered in the State of Utah: YES Business Number: 755627-0143
5. If **NO**, the operator was contacted contacted on:

6a. (R649-9-2)Waste Management Plan has been received on: IN PLACE

6b. Inspections of LA PA state/fee well sites complete on: waived

7. **Federal and Indian Lease Wells:** The BLM and or the BIA has approved the merger, name change, or operator change for all wells listed on Federal or Indian leases on: BLM BIA

8. **Federal and Indian Units:**
The BLM or BIA has approved the successor of unit operator for wells listed on: n/a

9. **Federal and Indian Communization Agreements ("CA"):**
The BLM or BIA has approved the operator for all wells listed within a CA on: na/

10. **Underground Injection Control ("UIC")** The Division has approved UIC Form 5, **Transfer of Authority to Inject,** for the enhanced/secondary recovery unit/project for the water disposal well(s) listed on: 2/23/2005

DATA ENTRY:

1. Changes entered in the **Oil and Gas Database on:** 2/28/2005
2. Changes have been entered on the **Monthly Operator Change Spread Sheet on:** 2/28/2005
3. Bond information entered in RBDMS on: 2/28/2005
4. Fee/State wells attached to bond in RBDMS on: 2/28/2005
5. Injection Projects to new operator in RBDMS on: 2/28/2005
6. Receipt of Acceptance of Drilling Procedures for APD/New on: waived

FEDERAL WELL(S) BOND VERIFICATION:

1. Federal well(s) covered by Bond Number: UT 0056

INDIAN WELL(S) BOND VERIFICATION:

1. Indian well(s) covered by Bond Number: 61BSBDH2912

FEE & STATE WELL(S) BOND VERIFICATION:

1. (R649-3-1) The **NEW** operator of any fee well(s) listed covered by Bond Number 61BSBDH2919

2. The **FORMER** operator has requested a release of liability from their bond on: n/a*
The Division sent response by letter on: n/a

LEASE INTEREST OWNER NOTIFICATION:

3. (R649-2-10) The **FORMER** operator of the fee wells has been contacted and informed by a letter from the Division of their responsibility to notify all interest owners of this change on: n/a

COMMENTS:

*Bond rider changed operator name from Inland Production Company to Newfield Production Company - **received 2/23/05**

STATE OF UTAH
DEPARTMENT OF NATURAL RESOURCES
DIVISION OF OIL, GAS, AND MINING

FORM 9

5.LEASE DESIGNATION AND SERIAL NUMBER: UTU-73086

SUNDRY NOTICES AND REPORTS ON WELLS

Do not use this form for proposals to drill new wells, significantly deepen existing wells below current bottom-hole depth, reenter plugged wells, or to drill horizontal laterals. Use APPLICATION FOR PERMIT TO DRILL form for such proposals.

6. IF INDIAN, ALLOTTEE OR TRIBE NAME:

7.UNIT or CA AGREEMENT NAME: GMBU (GRRV)

1. TYPE OF WELL Oil Well

8. WELL NAME and NUMBER: MON FED 13-4-9-16

2. NAME OF OPERATOR: NEWFIELD PRODUCTION COMPANY

9. API NUMBER: 43013317160000

3. ADDRESS OF OPERATOR: Rt 3 Box 3630 , Myton, UT, 84052

PHONE NUMBER: 435 646-4825 Ext

9. FIELD and POOL or WILDCAT: MONUMENT BUTTE

4. LOCATION OF WELL
FOOTAGES AT SURFACE: 2050 FSL 0660 FWL
QTR/QTR, SECTION, TOWNSHIP, RANGE, MERIDIAN: Qtr/Qtr: NWSW Section: 04 Township: 09.0S Range: 16.0E Meridian: S

COUNTY: DUCHESNE

STATE: UTAH

11. CHECK APPROPRIATE BOXES TO INDICATE NATURE OF NOTICE, REPORT, OR OTHER DATA

TYPE OF SUBMISSION

- ☐ NOTICE OF INTENT — Approximate date work will start:
- ✓ SUBSEQUENT REPORT — Date of Work Completion: 1/6/2012
- ☐ SPUD REPORT — Date of Spud:
- ☐ DRILLING REPORT — Report Date:

TYPE OF ACTION

☐ ACIDIZE	☐ ALTER CASING	☐ CASING REPAIR
☐ CHANGE TO PREVIOUS PLANS	☐ CHANGE TUBING	☐ CHANGE WELL NAME
✓ CHANGE WELL STATUS	☐ COMMINGLE PRODUCING FORMATIONS	✓ CONVERT WELL TYPE
☐ DEEPEN	☐ FRACTURE TREAT	☐ NEW CONSTRUCTION
☐ OPERATOR CHANGE	☐ PLUG AND ABANDON	☐ PLUG BACK
☐ PRODUCTION START OR RESUME	☐ RECLAMATION OF WELL SITE	☐ RECOMPLETE DIFFERENT FORMATION
☐ REPERFORATE CURRENT FORMATION	☐ SIDETRACK TO REPAIR WELL	☐ TEMPORARY ABANDON
☐ TUBING REPAIR	☐ VENT OR FLARE	☐ WATER DISPOSAL
☐ WATER SHUTOFF	☐ SI TA STATUS EXTENSION	☐ APD EXTENSION
☐ WILDCAT WELL DETERMINATION	☐ OTHER	OTHER:

12. DESCRIBE PROPOSED OR COMPLETED OPERATIONS. Clearly show all pertinent details including dates, depths, volumes, etc.

The subject well has been converted from a producing oil well to an injection well on 01/04/2012. On 01/06/2012 Dennis Ingram with the State of Utah DOGM was contacted concerning the initial MIT on the above listed well. On 01/06/2012 the casing was pressured up to 1350 psig and charted for 30 minutes with no pressure loss. The well was not injecting during the test. The tubing pressure was 0 psig during the test. There was not a State representative available to witness the test.

Accepted by the Utah Division of Oil, Gas and Mining

Date: January 12, 2012

By:

NAME (PLEASE PRINT)	PHONE NUMBER	TITLE
Lucy Chavez-Naupoto	435 646-4874	Water Services Technician

SIGNATURE	DATE
N/A	1/10/2012

RECEIVED: Jan. 10, 2012

Mechanical Integrity Test
Casing or Annulus Pressure Test

Newfield Production Company
Rt. 3 Box 3630
Myton, UT 84052
435-646-3721

Witness: _____ **Date** 1/6/12 **Time** 11:00 am pm

Test Conducted by: DAVE CLOWARD

Others Present: _____

Well: MONUMENT FEDERAL 13-4-9-16 **Field:** MONUMENT FEDERAL DUCHESNE, COUNTY, UTAH CITU 87538X

Well Location: MONUMENT FEDERAL 13-4-9-16 NW/SW SEC. 4, T9S, R16E **API No:** 43-013-31716

Time	Casing Pressure	
0 min	1350	psig
5	1350	psig
10	1350	psig
15	1350	psig
20	1350	psig
25	1350	psig
30 min	1350	psig
35		psig
40		psig
45		psig
50		psig
55		psig
60 min		psig

Tubing pressure: 0 psig

Result: Pass Fail

Signature of Witness: _____

Signature of Person Conducting Test: David Cloward

Sundry Number: 21974 API Well Number: 43013317160000

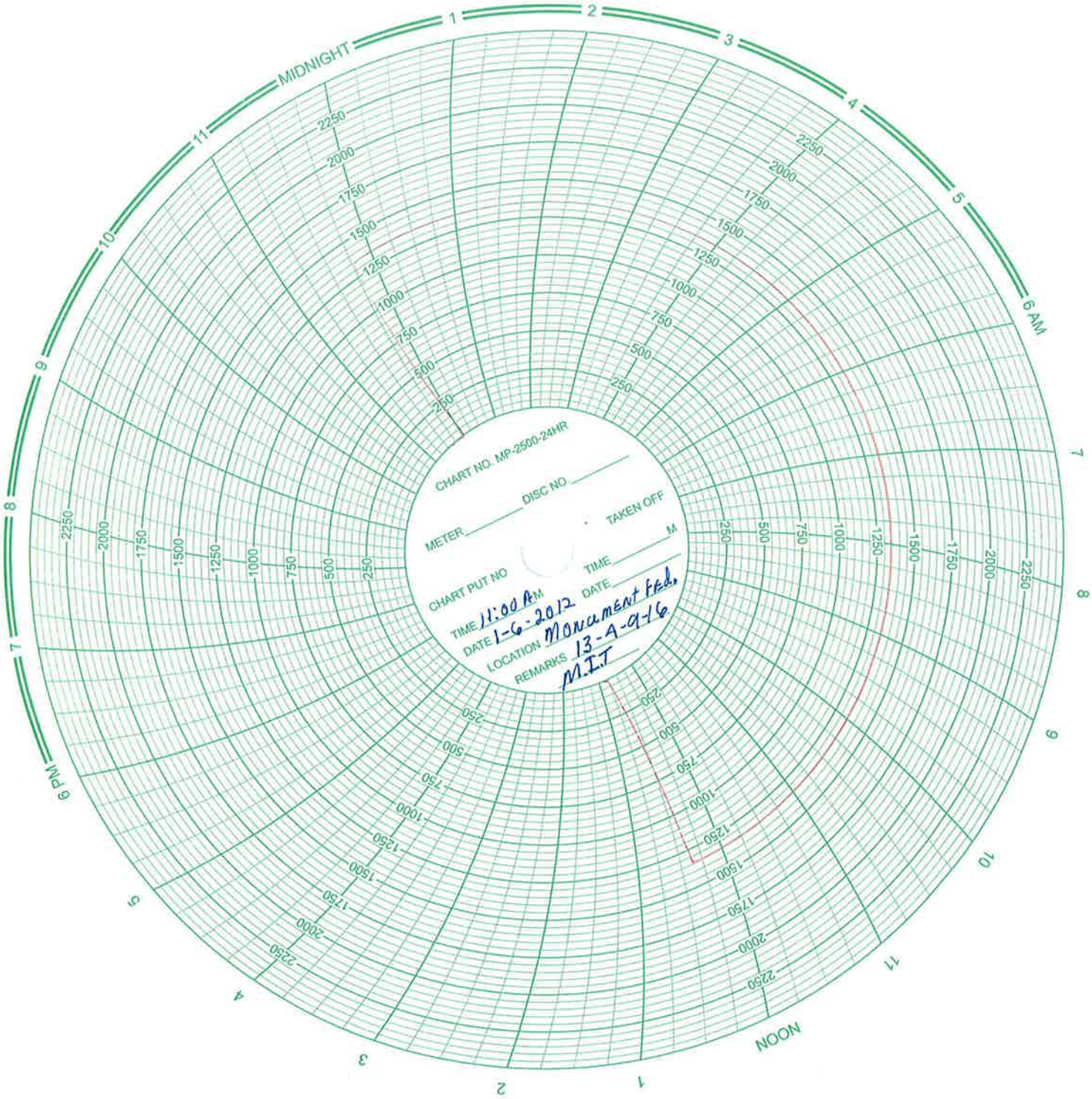

Daily Activity Report

Format For Sundry

MON 13-4-9-16

10/1/2011 To 2/29/2012

10/17/2011 Day: 1 **Host Well Gyro**

NC #3 on 10/17/2011 - MIRUSU, TOH w/ rods, run gyro. - Road rig to location. MIRUSU. Pump 60 bbls water down csg @ 250. RD pumping unit. Unseat rod pump. Flush tbg & rods w/ 40 bbls water @ 250. Softseat rod pump. Fill tbg w/ 10 bbls water. Attempt to pressure test tbg. Tbg blew @ 2800 psi. Unseat rod pump. TOH w/ 88- 3/4 guided rods, 55- 3/4 plain rods, 80- 3/4 guided rods, 6- 1 1/2 wt bars, rod pump. Used 40 bbls water to keep rod clean. Pump looked good. X- over to tbg eq. Flush tbg w/ 30 bbls water @ 250. RU VES to run gyro survey. RD VES. SDFD. - ND wellhead. Release TA. NU BOP. RU rig floor. PU TIH w/ 3- jts 2 7/8. Tag PBTD @ 5924'. No new fill. LD 3- jts 2 7/8. TOH w/ 182- jts 2 7/8, TA, 2- jts 2 7/8, SN, 2- jts 2 7/8, NC. Found hole in jt # 138. LD & replace jts 134-143. PU TIH w/ NC, 2- jts 2 7/8, bleed nipple, SN, 2- jts 2 7/8, TA, 182- jts 2 7/8. Pump 10 bbls water down tbg & drop std valve. Pressure test tbg to 3000 psi w/ 30 bbls water. Good test. RU sandline to retrieve std valve. RD sandline. RD rig floor. ND BOP. Set TA w/ 18000 tension. NU wellhead. X- over to rod eq. PU TIH w/ 2 1/2 x 1 1/4 x 12 x 16 RHAC, stabilizer (new), 6- 1 1/2 wt bars, 80- 3/4 guided rods, 55- 3/4 plain rods, 88- 3/4 guided rods, 2' x 3/4 pony rod, 1 1/2 x 22' polish rod. RU pumping unit. Fill tbg w/ 10 bbls water. Stroke test rod pump to 800 psi. Good test. RDMOSU. POP @ 6:00 W/ 86" SL @ 5 SPM FINAL REPORT!! - ND wellhead. Release TA. NU BOP. RU rig floor. PU TIH w/ 3- jts 2 7/8. Tag PBTD @ 5924'. No new fill. LD 3- jts 2 7/8. TOH w/ 182- jts 2 7/8, TA, 2- jts 2 7/8, SN, 2- jts 2 7/8, NC. Found hole in jt # 138. LD & replace jts 134-143. PU TIH w/ NC, 2- jts 2 7/8, bleed nipple, SN, 2- jts 2 7/8, TA, 182- jts 2 7/8. Pump 10 bbls water down tbg & drop std valve. Pressure test tbg to 3000 psi w/ 30 bbls water. Good test. RU sandline to retrieve std valve. RD sandline. RD rig floor. ND BOP. Set TA w/ 18000 tension. NU wellhead. X- over to rod eq. PU TIH w/ 2 1/2 x 1 1/4 x 12 x 16 RHAC, stabilizer (new), 6- 1 1/2 wt bars, 80- 3/4 guided rods, 55- 3/4 plain rods, 88- 3/4 guided rods, 2' x 3/4 pony rod, 1 1/2 x 22' polish rod. RU pumping unit. Fill tbg w/ 10 bbls water. Stroke test rod pump to 800 psi. Good test. RDMOSU. POP @ 6:00 W/ 86" SL @ 5 SPM FINAL REPORT!! - Road rig to location. MIRUSU. Pump 60 bbls water down csg @ 250. RD pumping unit. Unseat rod pump. Flush tbg & rods w/ 40 bbls water @ 250. Softseat rod pump. Fill tbg w/ 10 bbls water. Attempt to pressure test tbg. Tbg blew @ 2800 psi. Unseat rod pump. TOH w/ 88- 3/4 guided rods, 55- 3/4 plain rods, 80- 3/4 guided rods, 6- 1 1/2 wt bars, rod pump. Used 40 bbls water to keep rod clean. Pump looked good. X- over to tbg eq. Flush tbg w/ 30 bbls water @ 250. RU VES to run gyro survey. RD VES. SDFD. - Road rig to location. MIRUSU. Pump 60 bbls water down csg @ 250. RD pumping unit. Unseat rod pump. Flush tbg & rods w/ 40 bbls water @ 250. Softseat rod pump. Fill tbg w/ 10 bbls water. Attempt to pressure test tbg. Tbg blew @ 2800 psi. Unseat rod pump. TOH w/ 88- 3/4 guided rods, 55- 3/4 plain rods, 80- 3/4 guided rods, 6- 1 1/2 wt bars, rod pump. Used 40 bbls water to keep rod clean. Pump looked good. X- over to tbg eq. Flush tbg w/ 30 bbls water @ 250. RU VES to run gyro survey. RD VES. SDFD. - ND wellhead. Release TA. NU BOP. RU rig floor. PU TIH w/ 3- jts 2 7/8. Tag PBTD @ 5924'. No new fill. LD 3- jts 2 7/8. TOH w/ 182- jts 2 7/8, TA, 2- jts 2 7/8, SN, 2- jts 2 7/8, NC. Found hole in jt # 138. LD & replace jts 134-143. PU TIH w/ NC, 2- jts 2 7/8, bleed nipple, SN, 2- jts 2 7/8, TA, 182- jts 2 7/8. Pump 10 bbls water down tbg & drop std valve. Pressure test tbg to 3000 psi w/ 30 bbls water. Good test. RU sandline to retrieve std valve. RD sandline. RD rig floor. ND BOP. Set TA w/ 18000 tension. NU wellhead. X- over to rod eq. PU TIH w/ 2 1/2 x 1 1/4 x 12 x 16 RHAC, stabilizer (new), 6- 1 1/2 wt bars, 80- 3/4 guided rods, 55- 3/4 plain rods, 88- 3/4 guided rods, 2' x 3/4 pony rod, 1 1/2 x 22' polish rod. RU pumping unit. Fill tbg w/ 10 bbls water. Stroke test rod pump to 800 psi. Good test. RDMOSU. POP @ 6:00 W/ 86" SL @ 5 SPM FINAL REPORT!! - ND wellhead. Release TA. NU BOP. RU rig floor. PU TIH w/ 3- jts 2 7/8. Tag PBTD @ 5924'. No new fill. LD 3- jts 2 7/8. TOH w/ 182- jts 2 7/8, TA, 2- jts 2 7/8, SN, 2- jts 2 7/8, NC. Found hole in jt # 138. LD & replace jts 134-143.

PU TIH w/ NC, 2- jts 2 7/8, bleed nipple, SN, 2- jts 2 7/8, TA, 182- jts 2 7/8. Pump 10 bbls water down tbg & drop std valve. Pressure test tbg to 3000 psi w/ 30 bbls water. Good test. RU sandline to retrieve std valve. RD sandline. RD rig floor. ND BOP. Set TA w/ 18000 tension. NU wellhead. X- over to rod eq. PU TIH w/ 2 1/2 x 1 1/4 x 12 x 16 RHAC, stabilizer (new), 6- 1 1/2 wt bars, 80- 3/4 guided rods, 55- 3/4 plain rods, 88- 3/4 guided rods, 2' x 3/4 pony rod, 1 1/2 x 22' polish rod. RU pumping unit. Fill tbg w/ 10 bbls water. Stroke test rod pump to 800 psi. Good test. RDMOSU. POP @ 6:00 W/ 86" SL @ 5 SPM FINAL REPORT!! - Road rig to location. MIRUSU. Pump 60 bbls water down csg @ 250. RD pumping unit. Unseat rod pump. Flush tbg & rods w/ 40 bbls water @ 250. Softseat rod pump. Fill tbg w/ 10 bbls water. Attempt to pressure test tbg. Tbg blew @ 2800 psi. Unseat rod pump. TOH w/ 88- 3/4 guided rods, 55- 3/4 plain rods, 80- 3/4 guided rods, 6- 1 1/2 wt bars, rod pump. Used 40 bbls water to keep rod clean. Pump looked good. X- over to tbg eq. Flush tbg w/ 30 bbls water @ 250. RU VES to run gyro survey. RD VES. SDFD. - Road rig to location. MIRUSU. Pump 60 bbls water down csg @ 250. RD pumping unit. Unseat rod pump. Flush tbg & rods w/ 40 bbls water @ 250. Softseat rod pump. Fill tbg w/ 10 bbls water. Attempt to pressure test tbg. Tbg blew @ 2800 psi. Unseat rod pump. TOH w/ 88- 3/4 guided rods, 55- 3/4 plain rods, 80- 3/4 guided rods, 6- 1 1/2 wt bars, rod pump. Used 40 bbls water to keep rod clean. Pump looked good. X- over to tbg eq. Flush tbg w/ 30 bbls water @ 250. RU VES to run gyro survey. RD VES. SDFD. - Road rig to location. MIRUSU. Pump 60 bbls water down csg @ 250. RD pumping unit. Unseat rod pump. Flush tbg & rods w/ 40 bbls water @ 250. Softseat rod pump. Fill tbg w/ 10 bbls water. Attempt to pressure test tbg. Tbg blew @ 2800 psi. Unseat rod pump. TOH w/ 88- 3/4 guided rods, 55- 3/4 plain rods, 80- 3/4 guided rods, 6- 1 1/2 wt bars, rod pump. Used 40 bbls water to keep rod clean. Pump looked good. X- over to tbg eq. Flush tbg w/ 30 bbls water @ 250. RU VES to run gyro survey. RD VES. SDFD. - ND wellhead. Release TA. NU BOP. RU rig floor. PU TIH w/ 3- jts 2 7/8. Tag PBTD @ 5924'. No new fill. LD 3- jts 2 7/8. TOH w/ 182- jts 2 7/8, TA, 2- jts 2 7/8, SN, 2- jts 2 7/8, NC. Found hole in jt # 138. LD & replace jts 134-143. PU TIH w/ NC, 2- jts 2 7/8, bleed nipple, SN, 2- jts 2 7/8, TA, 182- jts 2 7/8. Pump 10 bbls water down tbg & drop std valve. Pressure test tbg to 3000 psi w/ 30 bbls water. Good test. RU sandline to retrieve std valve. RD sandline. RD rig floor. ND BOP. Set TA w/ 18000 tension. NU wellhead. X- over to rod eq. PU TIH w/ 2 1/2 x 1 1/4 x 12 x 16 RHAC, stabilizer (new), 6- 1 1/2 wt bars, 80- 3/4 guided rods, 55- 3/4 plain rods, 88- 3/4 guided rods, 2' x 3/4 pony rod, 1 1/2 x 22' polish rod. RU pumping unit. Fill tbg w/ 10 bbls water. Stroke test rod pump to 800 psi. Good test. RDMOSU. POP @ 6:00 W/ 86" SL @ 5 SPM FINAL REPORT!! - ND wellhead. Release TA. NU BOP. RU rig floor. PU TIH w/ 3- jts 2 7/8. Tag PBTD @ 5924'. No new fill. LD 3- jts 2 7/8. TOH w/ 182- jts 2 7/8, TA, 2- jts 2 7/8, SN, 2- jts 2 7/8, NC. Found hole in jt # 138. LD & replace jts 134-143. PU TIH w/ NC, 2- jts 2 7/8, bleed nipple, SN, 2- jts 2 7/8, TA, 182- jts 2 7/8. Pump 10 bbls water down tbg & drop std valve. Pressure test tbg to 3000 psi w/ 30 bbls water. Good test. RU sandline to retrieve std valve. RD sandline. RD rig floor. ND BOP. Set TA w/ 18000 tension. NU wellhead. X- over to rod eq. PU TIH w/ 2 1/2 x 1 1/4 x 12 x 16 RHAC, stabilizer (new), 6- 1 1/2 wt bars, 80- 3/4 guided rods, 55- 3/4 plain rods, 88- 3/4 guided rods, 2' x 3/4 pony rod, 1 1/2 x 22' polish rod. RU pumping unit. Fill tbg w/ 10 bbls water. Stroke test rod pump to 800 psi. Good test. RDMOSU. POP @ 6:00 W/ 86" SL @ 5 SPM FINAL REPORT!!

Daily Cost: $0
Cumulative Cost: $13,674

12/29/2011 Day: 1 **Conversion**

Nabors #147 on 12/29/2011 - MIRU Nabors 1423. Flush and pressure test. LD rod string. - MIRU Nabors 1423. Unhang head. Unseat rod pump. Hot oiler flushed tbg w/ 50 BW. Soft seat rod pump. Fill tbg w/ 4 BW. Pressure test to 3000 psi. Unseat rod pump. LD rod string. Flushed rods 3 time on TOH. SIWFN - MIRU Nabors 1423. Unhang head. Unseat rod pump. Hot oiler flushed tbg w/ 50 BW. Soft seat rod pump. Fill tbg w/ 4 BW. Pressure test to 3000 psi. Unseat rod pump. LD rod string. Flushed rods 3 time on TOH. SIWFN - MIRU Nabors 1423. Unhang head. Unseat rod pump. Hot oiler flushed tbg w/ 50 BW. Soft seat rod pump.

Fill tbg w/ 4 BW. Pressure test to 3000 psi. Unseat rod pump. LD rod string. Flushed rods 3 time on TOH. SIWFN **Finalized**
Daily Cost: $0
Cumulative Cost: ($20,627)

1/3/2012 Day: 2 **Conversion**

Nabors #147 on 1/3/2012 - ND WH. NU BOP. TOH w/ tbg breaking and redoping. LD extra tbg and BHA. PU & RIH w/ pkr and 70 jts of tbg. SIWFN - ND wellhead & release TA. NU BOP. TOH & talley production tbg. Break each connection, clean & inspect pins and apply Liquid O-ring to pins. Out W/ 140 jts. LD btm 40 jts & BHA. MU & TIH W/ new Weatherford 5 1/2" Arrowset 1-X packer (W/ W.L. re-entry guide), new 2 7/8 SN and 70 jts 2 7/8 8rd 6.5# J-55 tbg. Re-torque each connection on TIH. SIWFN. - ND wellhead & release TA. NU BOP. TOH & talley production tbg. Break each connection, clean & inspect pins and apply Liquid O-ring to pins. Out W/ 140 jts. LD btm 40 jts & BHA. MU & TIH W/ new Weatherford 5 1/2" Arrowset 1-X packer (W/ W.L. re-entry guide), new 2 7/8 SN and 70 jts 2 7/8 8rd 6.5# J-55 tbg. Re-torque each connection on TIH. SIWFN. - ND wellhead & release TA. NU BOP. TOH & talley production tbg. Break each connection, clean & inspect pins and apply Liquid O-ring to pins. Out W/ 140 jts. LD btm 40 jts & BHA. MU & TIH W/ new Weatherford 5 1/2" Arrowset 1-X packer (W/ W.L. re-entry guide), new 2 7/8 SN and 70 jts 2 7/8 8rd 6.5# J-55 tbg. Re-torque each connection on TIH. SIWFN.
Daily Cost: $0
Cumulative Cost: ($13,117)

1/4/2012 Day: 3 **Conversion**

Nabors #147 on 1/4/2012 - 50 psi on well. Bleed off pressure. Continue to RIH w/ tbg. Hot oiler flushed tbg w/ 30 bbls of wtr. Drop SV. Fill tbg w/ 18 BW. Pressure test to 3000 psi. Fish SV. SIWFN - 50 psi on well. Bleed off pressure. Continue to RIH w/ tbg. Hot oiler flushed tbg w/ 30 bbls of wtr. Drop SV. Fill tbg w/ 18 BW. Pressure test to 3000 psi. Fish SV. SIWFN - 50 psi on well. Bleed off pressure. Continue to RIH w/ tbg. Hot oiler flushed tbg w/ 30 bbls of wtr. Drop SV. Fill tbg w/ 18 BW. Pressure test to 3000 psi. Fish SV. SIWFN - 50 psi on well. Bleed off pressure. Continue to RIH w/ tbg. Hot oiler flushed tbg w/ 30 bbls of wtr. Drop SV. Fill tbg w/ 18 BW. Pressure test to 3000 psi. Fish SV. SIWFN
Daily Cost: $0
Cumulative Cost: ($7,296)

1/5/2012 Day: 4 **Conversion**

Nabors #147 on 1/5/2012 - ND BOP. Pump pkr fluid. Set pkr. NU WH. Pressure test annulus and pkr. RDMOSU. - ND BOP & land tbg on flange. Mix 15 gals Multi-Chem C-6031 & 5 gals B-8850 in 70 bbls fresh water. Pump dn annulus @ 90°F. PU on tbg & set pkr W/ SN @ 4348', CE @ 4352' & EOT @ 4357'. Land tbg W/ 15,000# tension. NU wellhead. Pressure test annulus & pkr to 1350 psi. RDMOSU. Ready for MIT - ND BOP & land tbg on flange. Mix 15 gals Multi-Chem C-6031 & 5 gals B-8850 in 70 bbls fresh water. Pump dn annulus @ 90°F. PU on tbg & set pkr W/ SN @ 4348', CE @ 4352' & EOT @ 4357'. Land tbg W/ 15,000# tension. NU wellhead. Pressure test annulus & pkr to 1350 psi. RDMOSU. Ready for MIT - ND BOP & land tbg on flange. Mix 15 gals Multi-Chem C-6031 & 5 gals B-8850 in 70 bbls fresh water. Pump dn annulus @ 90°F. PU on tbg & set pkr W/ SN @ 4348', CE @ 4352' & EOT @ 4357'. Land tbg W/ 15,000# tension. NU wellhead. Pressure test annulus & pkr to 1350 psi. RDMOSU. Ready for MIT **Finalized**
Daily Cost: $0
Cumulative Cost: $7,098

1/9/2012 Day: 5 **Conversion**

Rigless on 1/9/2012 - Conduct MIT - On 01/06/2012 Dennis Ingram with the State of Utah (DOGM) was contacted concerning the initial MIT on the above listed well. On 01/06/2012 the csg was pressured up to 1350 psig and charted for 30 minutes with no pressure loss. The well was not injecting during the test. The tbg pressure was 0 psig during the test. There was not a State representative available to witness the test. - On 01/06/2012 Dennis Ingram with the State of Utah (DOGM) was contacted concerning the initial MIT on the above listed well. On 01/06/2012 the csg was pressured up to 1350 psig and charted for 30 minutes with no pressure loss. The well was not injecting during the test. The tbg pressure was 0 psig during the test. There was not a State representative available to witness the test. - On 01/06/2012 Dennis Ingram with the State of Utah (DOGM) was contacted concerning the initial MIT on the above listed well. On 01/06/2012 the csg was pressured up to 1350 psig and charted for 30 minutes with no pressure loss. The well was not injecting during the test. The tbg pressure was 0 psig during the test. There was not a State representative available to witness the test.
Finalized
Daily Cost: $0
Cumulative Cost: $32,858

Pertinent Files: Go to File List

STATE OF UTAH
DEPARTMENT OF NATURAL RESOURCES
DIVISION OF OIL, GAS, AND MINING

FORM 9

5.LEASE DESIGNATION AND SERIAL NUMBER: UTU-73086

SUNDRY NOTICES AND REPORTS ON WELLS

Do not use this form for proposals to drill new wells, significantly deepen existing wells below current bottom-hole depth, reenter plugged wells, or to drill horizontal laterals. Use APPLICATION FOR PERMIT TO DRILL form for such proposals.

6. IF INDIAN, ALLOTTEE OR TRIBE NAME:

7.UNIT or CA AGREEMENT NAME: GMBU (GRRV)

1. TYPE OF WELL Water Injection Well

8. WELL NAME and NUMBER: MON FED 13-4-9-16

2. NAME OF OPERATOR: NEWFIELD PRODUCTION COMPANY

9. API NUMBER: 43013317160000

3. ADDRESS OF OPERATOR: Rt 3 Box 3630 , Myton, UT, 84052

PHONE NUMBER: 435 646-4825 Ext

9. FIELD and POOL or WILDCAT: MONUMENT BUTTE

4. LOCATION OF WELL
FOOTAGES AT SURFACE: 2050 FSL 0660 FWL
QTR/QTR, SECTION, TOWNSHIP, RANGE, MERIDIAN: Qtr/Qtr: NWSW Section: 04 Township: 09.0S Range: 16.0E Meridian: S

COUNTY: DUCHESNE

STATE: UTAH

11. CHECK APPROPRIATE BOXES TO INDICATE NATURE OF NOTICE, REPORT, OR OTHER DATA

TYPE OF SUBMISSION

- ☐ NOTICE OF INTENT — Approximate date work will start:
- ✓ SUBSEQUENT REPORT — Date of Work Completion: 2/10/2012
- ☐ SPUD REPORT — Date of Spud:
- ☐ DRILLING REPORT — Report Date:

TYPE OF ACTION

☐ ACIDIZE	☐ ALTER CASING	☐ CASING REPAIR
☐ CHANGE TO PREVIOUS PLANS	☐ CHANGE TUBING	☐ CHANGE WELL NAME
☐ CHANGE WELL STATUS	☐ COMMINGLE PRODUCING FORMATIONS	☐ CONVERT WELL TYPE
☐ DEEPEN	☐ FRACTURE TREAT	☐ NEW CONSTRUCTION
☐ OPERATOR CHANGE	☐ PLUG AND ABANDON	☐ PLUG BACK
☐ PRODUCTION START OR RESUME	☐ RECLAMATION OF WELL SITE	☐ RECOMPLETE DIFFERENT FORMATION
☐ REPERFORATE CURRENT FORMATION	☐ SIDETRACK TO REPAIR WELL	☐ TEMPORARY ABANDON
☐ TUBING REPAIR	☐ VENT OR FLARE	☐ WATER DISPOSAL
☐ WATER SHUTOFF	☐ SI TA STATUS EXTENSION	☐ APD EXTENSION
☐ WILDCAT WELL DETERMINATION	✓ OTHER	OTHER: Put on Injection

12. DESCRIBE PROPOSED OR COMPLETED OPERATIONS. Clearly show all pertinent details including dates, depths, volumes, etc.

The above reference well was put on injection at 3:30 PM on 02/10/2012.

Accepted by the Utah Division of Oil, Gas and Mining
FOR RECORD ONLY
February 21, 2012

NAME (PLEASE PRINT)	PHONE NUMBER	TITLE
Lucy Chavez-Naupoto	435 646-4874	Water Services Technician

SIGNATURE	DATE
N/A	2/17/2012

RECEIVED: Feb. 17, 2012

Form 3160-3
(November 1983)
(formerly 9-331C)

CONFIDENTIAL

UNITED STATES
DEPARTMENT OF THE INTERIOR
BUREAU OF LAND MANAGEMENT

SUBMIT IN TRIPLICATE*
(Other instructions on reverse side)

CONFIDENTIAL

Form approved.
Budget Bureau No. 1004-0136
Expires August 31, 1985

APPLICATION FOR PERMIT TO DRILL, DEEPEN, OR PLUG BACK

5. LEASE DESIGNATION AND SERIAL NO.: UTU-73086

6. IF INDIAN, ALLOTTEE OR TRIBE NAME: n/a

7. UNIT AGREEMENT NAME: n/a

8. FARM OR LEASE NAME: Monument Federal

9. WELL NO.: #13-4-9-16

10. FIELD AND POOL, OR WILDCAT: Monument Butte/Green River

11. SEC., T., R., M., OR BLK. AND SURVEY OR AREA: Sec. 4, T9S, R16E

1a. TYPE OF WORK: DRILL [X] DEEPEN [ ] PLUG BACK [ ]

b. TYPE OF WELL: OIL WELL [X] GAS WELL [ ] OTHER SINGLE ZONE [ ] MULTIPLE ZONE [ ]

2. NAME OF OPERATOR: Equitable Resources Energy Company

3. ADDRESS OF OPERATOR: 1601 Lewis Avenue; Billings, MT 59102 (406) 259-7860

4. LOCATION OF WELL (Report location clearly and in accordance with any State requirements.*)
At surface: NW SW Section 4, T9S, R16E
At proposed prod. zone: 2050' FSL, 660' FWL

12. COUNTY OR PARISH: Duchesne
13. STATE: UTAH

14. DISTANCE IN MILES AND DIRECTION FROM NEAREST TOWN OR POST OFFICE*: From Myton, Utah approximately 10 miles SW

15. DISTANCE FROM PROPOSED* LOCATION TO NEAREST PROPERTY OR LEASE LINE, FT. (Also to nearest drlg. unit line, if any):

16. NO. OF ACRES IN LEASE:

17. NO. OF ACRES ASSIGNED TO THIS WELL:

18. DISTANCE FROM PROPOSED LOCATION* TO NEAREST WELL, DRILLING, COMPLETED, OR APPLIED FOR, ON THIS LEASE, FT.:

19. PROPOSED DEPTH: 6,000'

20. ROTARY OR CABLE TOOLS: Rotary

21. ELEVATIONS (Show whether DF, RT, GR, etc.): GL 5761.2'

22. APPROX. DATE WORK WILL START*:

23. PROPOSED CASING AND CEMENTING PROGRAM

SIZE OF HOLE	SIZE OF CASING	WEIGHT PER FOOT	SETTING DEPTH	QUANTITY OF CEMENT
See Drilling Program/Casing Design				

Operator plans to drill this well in accordance with the attached EXHIBITS. A listing of EXHIBITS is also attached.

SELF CERTIFICATION: I hereby certify that I am authorized, by proper lease interest owner, to conduct these operations associated with the application. Bond coverage pursuant to 43 CFR 3104 for lease activities is being provided by Equitable Resources Energy Company as principal and Safeco Insurance Company of America as surety under BLM Bond No. MT 0576 (Nationwide Oil & Gas Bond #5547188) who will be responsible for compliance with all of the terms and conditions of that portion of the lease associated with this application.

ORIGINAL: Bureau of Land Management (Vernal, UT)
COPY: Utah Division of Oil, Gas and Mining

RECEIVED
SEP 30 1996
DIV. OF OIL, GAS & MINING

IN ABOVE SPACE DESCRIBE PROPOSED PROGRAM: If proposal is to deepen or plug back, give data on present productive zone and proposed new productive zone. If proposal is to drill or deepen directionally, give pertinent data on subsurface locations and measured and true vertical depths. Give blowout preventer program, if any.

24.
SIGNED Bobbie Schuman
Bobbie Schuman
TITLE Regulatory and Environmental Specialist
DATE September 25, 1996

(This space for Federal or State office use)

PERMIT NO. 43-013-31716
APPROVAL DATE
APPROVED BY T.A. Matthews
TITLE Petroleum Engineer
DATE 11/25/96
CONDITIONS OF APPROVAL, IF ANY:

*See Instructions On Reverse Side

Title 18 U.S.C. Section 1001, makes it a crime for any person knowingly and willfully to make to any department or agency of the United States any false, fictitious or fraudulent statements or representations as to any matter within its jurisdiction.

T9S, R16E, S.L.B.&M.

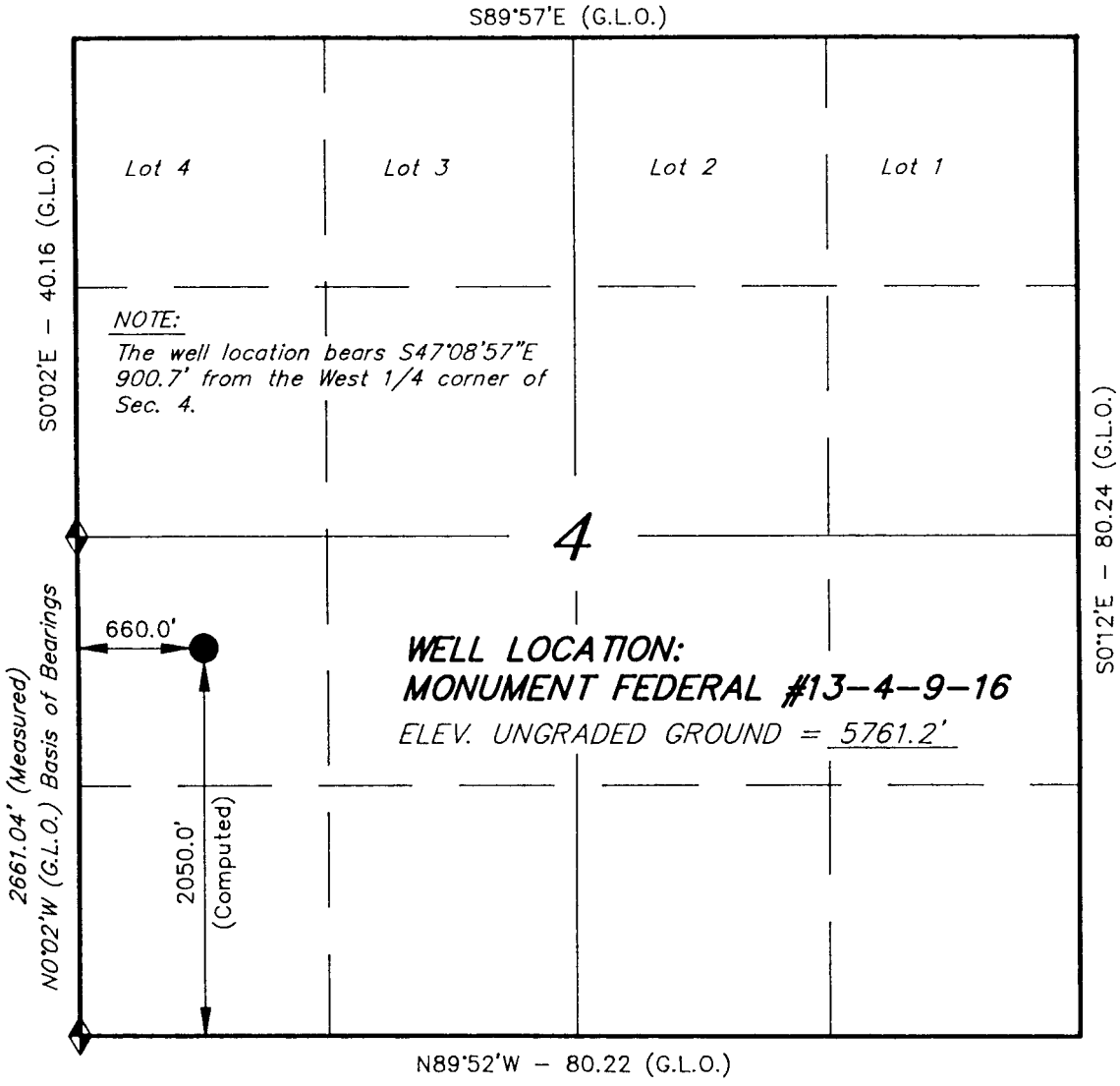

= SECTION CORNERS LOCATED

BASIS OF ELEV; U.S.G.S. 7-1/2 min QUAD (MYTON SW)

EQUITABLE RESOURCES ENERGY CO.

WELL LOCATION, MONUMENT FEDERAL #13-4-9-16, LOCATED AS SHOWN IN THE NW 1/4 SW 1/4 OF SECTION 4, T9S, R16E, S.L.B.&M. DUCHESNE COUNTY, UTAH.

N

THIS IS TO CERTIFY THAT THE ABOVE PLAT WAS PREPARED FROM FIELD NOTES OF ACTUAL SURVEYS MADE BY ME OR UNDER MY SUPERVISION AND THAT THE SAME ARE TRUE AND CORRECT TO THE BEST OF MY KNOWLEDGE AND BELIEF.

REGISTERED LAND SURVEYOR
GENE STEWART
STATE OF UTAH

REGISTERED LAND SURVEYOR
REGISTRATION No. 144102
STATE OF UTAH

TRI STATE LAND SURVEYING & CONSULTING
38 WEST 100 NORTH – VERNAL, UTAH 84078
(801) 781-2501

SCALE: 1" = 1000'	SURVEYED BY: G.S.
DATE: 9-8-96	WEATHER: WARM
NOTES:	FILE #

CONFIDENTIAL

AS OPERATOR, WE HEREBY REQUEST THAT THE STATUS OF THIS WELL BE HELD TIGHT FOR THE MAXIMUM PERIOD ALLOWED BY FEDERAL AND STATE REGULATIONS.

Equitable Resources Energy Company
Western Region
1601 Lewis Avenue
Billings, MT 59102
(406) 259-7860
FAX: (406) 245-1361

EXHIBITS

A PROPOSED DRILLING PROGRAM

B PROPOSED SURFACE USE PROGRAM

C GEOLOGIC PROGNOSIS

D DRILLING PROGRAM/CASING DESIGN/WELLBORE DIAGRAM

E HAZMAT DECLARATION

F EXISTING & PLANNED ACCESS ROADS (MAPS A & B)

G WELLSITE LAYOUT

H BOPE SCHEMATIC

I EXISTING ROADS (MAP C)

J PROPOSED PRODUCTION FACILITY DIAGRAM

K SURVEY PLAT

L LAYOUT/CUT & FILL DIAGRAM

M GAS GATHERING PIPELINE ROW APPLICATION

9/25/96

PROPOSED DRILLING PROGRAM

EQUITABLE RESOURCES ENERGY COMPANY
Western Region
Monument Federal #13-4-9-16
NW SW Section 4, T9S, R16E
Duchesne County, Utah

In accordance with requirements outlined in 43 CFR 3162-3.1 (d):

1. ESTIMATED IMPORTANT GEOLOGICAL MARKERS:

   See Geologic Prognosis (EXHIBIT "C")

2. ESTIMATED DEPTHS OF ANTICIPATED OIL, GAS OR WATER:

   See Geologic Prognosis (EXHIBIT "C")

3. OPERATOR'S MINIMUM SPECIFICATIONS FOR PRESSURE CONTROL:

   a. EXHIBIT "H" is a schematic of the BOP equipment and choke manifold. A 2M system will be used. The BOPE will be installed after setting 8-5/8" casing at 260'. The blind rams and pipe rams will be tested to 1500 psi. Pipe rams will be operationally checked each 24-hour period and blind rams each time pipe is pulled out of the hole.

   b. The BOPE will be tested to 1500 psi when initially installed, whenever any seal subject to test pressure is broken, and following related repairs. The pipe and blind rams will be activated at least weekly and on every trip the pipe and blind rams will be activated.

   c. An accumulator of sufficient capacity to open the hydraulically-controlled choke valve lines (if so equipped), close all rams, and retain a minimum of 200 psi above precharge on the closing manifold without the use of the closing unit pumps will be installed during the drilling of this well.

   d. An upper kelly cock will be used during the drilling of this well.

   e. Visual mud monitoring equipment will be used to detect volume changes indicating loss or gain in circulating fluid volume.

   f. Sufficient quantities of mud materials will be maintained or readily accessible for the purpose of assuring well control.

4. PROPOSED CASING AND CEMENTING PROGRAM:

a. Surface casing will be set in the Uinta formation to approximately 260' and cemented to surface.

b. All potentially productive hydrocarbon zones will be isolated.

c. Casing designs are based on factors of burst: 1.00, collapse: 1.125, and joint strength: 1.8.

d. All casing strings will be pressure tested to 0.22 psi/ft. of casing string length or 1500 psi whichever is greater (not to exceed 70% of yield).

e. For details of casing, cement program, drilling fluid program, and proposed mud program, see the following attachment:

Drilling Program/Casing Design (EXHIBIT "D")

5. HAZARDOUS PRESSURES, TEMPERATURES, FLUIDS/GASSES EXPECTED:

a. Expected bottom hole temperature is 125 degrees F. Expected bottom hole pressure is 1500 psi.

b. No abnormal pressures or temperatures have been noted or reported in wells drilled to the Green River formation in this area.

c. No dangerous levels of hydrogen sulfide, hazardous fluids, or gasses have been found, reported, or known to exist at the depth to be drilled in this well, in this area.

6. ANTICIPATED STARTING DATE AND DURATION OF OPERATIONS:

a. The drilling operations for this well will begin as soon after APD approval as possible.

b. These drilling operations should be completed within 12 days after spudding the well depending on weather and hole conditions.

c. If the well is productive, a sundry notice and plat showing exact installed facilities will be submitted.

d. If this well is non-productive, a sundry notice will be filed with the BLM District Office within 30 days following completion of the well for abandonment.

7. OTHER

a. Operator requests a variance to regulations requiring a straight run blooie line.

b. Operator requests a variance to regulations requiring an automatic ignitor or continuous pilot light on the blooie line.

c. When running 5-1/2" production casing we will install 5-1/2" pipe rams and are hereby requesting a variance on testing. We request not to test.

B

Multi-Point Surface Use and Operations Plan

EQUITABLE RESOURCES ENERGY COMPANY
MONUMENT FEDERAL #13-4-9-16
NW SW SECTION 4, T9S, R16E
DUCHESNE COUNTY, UTAH

1. Existing Roads: Refer to Maps "A" & "B" (shown in RED)

A. The proposed well site is staked and four reference stakes are present. 200' & 250' West and 175' & 200' North.

B. The Monument Federal #13-4-9-16 is located 10 miles Southwest of Myton Utah in the NW1/4 SW1/4 Section 4, T9S, R16E, SLB&M, Duchesne County, Utah. To reach the 13-4-9-16, proceed West from Myton, Utah along U.S. Highway 40 for 1.6 miles to the junction of this highway and Sand Wash road; Proceed South along the Sand Wash road approximately 6.3 miles to a road intersection, turn right and continue 5.4 miles to a road intersection. Turn left and proceed 0.2 mile the proposed access road sign. Follow flags 0.2 mile to location.

C. Access roads - refer to Maps "A" and "B".

D. Access roads within a one-mile radius - refer to map "B".

E. The existing roads will be maintained in the same or better condition as existed prior to the commencement of operations and said maintenance will continue until final abandonment and reclamation of the well location.

2. Planned Access Roads: Refer to Map "B"

Approximately 0.2 mile of new road construction will be required for access to the proposed well location.

A. Width - maximum 30-foot overall right-of-way with an 18-foot road running surface, crowned & ditched and/or sloped and dipped.

B. Construction standard - the access road will be constructed so as to conform to the standards outlined in the Bureau of Land Management and Forest Service publication: Surface Operating Standards for Oil and Gas Exploration and Development. (1989)

The road will be constructed to meet the standards of the anticipated traffic flow and all-weather requirements. Construction will include ditching, draining, crowning, and capping or sloping and dipping the roadbed as necessary to provide a well constructed and safe road. Prior to construction/upgrading, the roadway shall be cleared of any snow cover and allowed to dry completely. Traveling off of the thirty (30) foot right-of-way will not be allowed.

Road drainage crossings shall be of the typical dry creek drainage crossing type. Crossing shall be designed so they will not cause siltation or the accumulation of debris in the drainage crossing nor shall the drainages be blocked by the roadbed. Erosion of drainage ditches by runoff water shall be prevented by diverting water off at frequent intervals by means of cutouts.

Upgrading shall not be allowed during muddy conditions.

Should mud holes develop, they shall be filled in and detours around them avoided.

C. Maximum grade - Less than 8%

D. Turnouts - no turnouts will be required on this access road.

E. Drainage design - the access road will be crowned and ditched or sloped and dipped, and water turnouts installed as necessary to provide for proper drainage along the access road route.

F. Culverts, cuts and fills - none.

G. Surface materials - all construction materials will be native material taken from onsite.

H. Gates, cattleguards or fence cuts - none required.

I. Road maintenance - during both the drilling and production phase of operations, the road surface and shoulders will be kept in a safe and useable condition and will be maintained in accordance with the original construction standards. All drainage ditches and culverts

will be kept clear and free-flowing, and will also be maintained in accordance with the original construction standards. The access road right-of-way will be kept free of trash during operations.

J. The proposed access road has been centerline flagged.

K. If a right-of-way is required please consider this APD the application for said right-of-way.

3. Location of Existing Wells Within a One-Mile Radius:

Please Refer to Map "C"

A. Water wells - none known.
B. Abandoned wells - see Map "C"
C. Temporarily abandoned wells - none known.
D. Disposal wells - none known.
E. Drilling wells - none known.
F. Producing wells - see Map "C".
G. Shut-in wells - none known.
H. Injection wells - none known.
I. Monitoring wells - none known.

4. Location of Existing and/or Proposed Facilities Owned by Equitable Resources Energy Company Within a One-Mile Radius:

A. Existing

1. Tank batteries - see Map "C".
2. Production facilities - see Map "C".
3. Oil gathering lines - none.
4. Gas gathering lines - see Map "C".

B. New Facilities Contemplated

1. All production facilities will be located on the disturbed portion of the well pad and at a minimum of twenty-five (25) feet from the toe of the backslope or toe of the fill slope.

2. The production facilities will consist primarily of a pumping unit, Two tanks and an emergency pit. A diagram showing the proposed production facility layout is included in this APD.

3. Production facilities will be accommodated on the existing well pad. Construction materials required for installation of the production facilities will be obtained from the site; any additional materials required will be purchased from a local supplier having

a permitted (private) source of materials within the area.

A dike will be constructed completely around those production facilities which contain fluids (i.e. production tanks, produced water tanks and/or heater treater). These dikes will be constructed of compacted subsoil, be impervious, hold 100% of the capacity of the largest tank, and be independent of the back cut.

4. All permanent (onsite for six months or longer) above the ground structures constructed or installed including pumping units) will be painted Desert Brown. All production facilities will be painted within six (6) months of installation. Facilities required to comply with Occupational Health and Safety Act Rules and Regulations will be excluded from this painting requirement.

C. The production (emergency) pit will be 12'x12' and will be fenced. Said fence will be maintained in good condition.

D. During drilling and subsequent operations, all equipment and vehicles will be confined to the access road right-of-way and any additional areas as specified in the approved Application for Permit to Drill.

E. Reclamation of disturbed areas no longer needed for operation will accomplished by grading, leveling and seeding as recommended by the Bureau of Land Management.

For Pipeline:

F. Any proposed pipelines will be submitted to the authorized officer Via Sundry Notice for approval of subsequent operations.

G. Equitable Resources Energy Company shall be responsible for road maintenance from the beginning to completion of operations.

5. Location and Type of Water Supply

A. Water to be used for the drilling of these wells will be hauled by truck over the roads described in item #1 and item #2, from a well owned by Owen Dale Anderson of Vernal Utah or from a spring owned by Joe Shields of Myton Utah. Source will be determined by sundry notice closer to the

beginning of drilling operations.

B. No water well will be drilled on this location.

6. Source of Construction Materials

A. No construction materials are needed for drilling operations. In the event of production, the small amount of gravel needed for facilities will be hauled in by truck from a local gravel pit over existing access roads to the area. No special access other than for drilling operations and pipeline construction is needed.

B. All access roads crossing Federal land are described under item #2, and shown on Map #A.

All construction material for these location sites and access roads shall be borrowed material accumulated during the construction of the location sites and access roads. No additional construction material from other sources is anticipated at this time, if in the future it is required the appropriate actions will be taken to acquire it from private sources.

C. All surface disturbance area is on B.L.M. lands.

D. There are no trees on this location.

7. Methods of Handling Waste Materials:

A. Cuttings - the cuttings will be deposited in the reserve pit.

B. Drilling fluids - including salts and chemicals will be contained in the reserve pit. Upon termination of drilling and completion operations, the liquid contents of the reserve pit will be removed and disposed of at an approved waste disposal facility within one hundred twenty (120) days after termination of drilling and completion activities.

In the event adverse weather conditions prevent removal of the fluids from the reserve pit within this time period, an extension may be granted by the Authorized Officer upon receipt of a written request from Equitable Resources Energy Company.

The reserve pit will be constructed so as not to leak, break, or allow discharge. The reserve pit will be lined with a 12 mil plastic reinforced liner.

C. Produced fluids - liquid hydrocarbons produced during completion operations will be placed in test tanks on the location. Produced waste water will be confined to a lined pit (reserve pit) or storage tank for a period not to exceed ninety (90) days after initial production. During the ninety (90) day period, in accordance with Onshore Order #7, an application for approval of a permanent disposal method and location, along with the required water analysis, shall be submitted for the Authorized Officer's approval. Failure to file an application within the time frame allowed will be considered an incidence of noncompliance.

Any spills of oil, gas, salt water or other noxious fluids will be immediately cleaned up and removed to an approved disposal site.

D. Sewage - self-contained, chemical toilets will be provided for human waste disposal. Upon completion of operations, or as needed, the toilet holding tanks will be pumped and the contents thereof disposed of in the nearest, approved, sewage disposal facility.

E. Garbage and other waste material - garbage, trash and other waste materials will be collected in a portable, self-contained and fully-enclosed trash cage during drilling and completion operations. Upon completion of operations (or as needed) the accumulated trash will be disposed of at an authorized sanitary landfill. No trash will be burned on location or placed in the reserve pit.

F. Immediately after removal of the drilling rig, all debris and other waste materials not contained in the trash cage will be cleaned up and removed from the well location. No adverse materials will be left on the location. Any open pits will be fenced during the drilling operation and the fencing will be maintained until such time as the pits are backfilled.

G. The reserve and/or production pit will be constructed on the existing location and will not be located in natural drainages where a flood hazard exists or surface runoff will destroy or damage the pit walls. All pits will be constructed so as not to leak, break, or allow the discharge of liquids therefrom.

8. Ancillary Facilities:

None anticipated.

9. Wellsite Layout:

A. Plat #1 shows the drill site layout as staked. Cross sections have been drafted to visualize the planned cuts and fills across the location. An average minimum of six (6) inches of topsoil will be stripped from the location (including areas of cut, fill, and/or subsoil storage) and stockpiled for future reclamation of the well site. Refer to Figure #1 for the location of the topsoil and subsoil stockpiles. The reserve pit will be on the North side of location. Access will be from the West between corner #2 and corner #3.

B. Plat #2 is a diagram showing the rig layout. No permanent living facilities are planned. There may be as many as three (3) trailers on location during drilling operation.

C. A completion rig will be moved onto location for completion operations after drilling operations have been completed and the drilling rig has been moved off location.

D. A diagram showing the proposed production facility layout is included in this APD.

E. The reserve pit will be constructed so as to be capable of holding 12,000 bbls. of fluid.

The reserve pit will be lined with a 12 mil plastic liner, it will be torn and perforated after the pit dries and before backfilling of the reserve pit.

F. Prior to the commencement of drilling operations, the reserve pit will be fenced on three (3) sides using 39-inch net wire with one strand of barbed wire on top of the net wire. The net wire will be no more than two inches above the ground. the barbed wire will be three inches above the net wire. total height of the fence will be at least 42-inches.

1. Corner posts shall be cemented and/or braced in such a manner to keep the fence tight at all times.

2. Standard steel, wood, or pipe posts shall be used between the corner braces. The maximum distance between any two (2) posts shall be no greater than sixteen (16) feet.

3. All wire shall be stretched, by using a stretching device, before it is attached to the corner posts.

The fourth side of the reserve pit will be fenced immediately upon removal of the drilling rig and the fencing will be maintained until the pit is backfilled.

G. Any hydrocarbons on the pit will be removed from the pit as soon as possible after completion operations are completed.

10. Plans for Reclamation of the Surface:

The B.L.M. will be contacted prior to commencement of any reclamation operations.

A. Production

1. Immediately upon well completion, the well location and surrounding area(s) will be cleared of all debris, materials, trash and junk not required for production.

2. Immediately upon well completion, any hydrocarbons on the pit shall be removed in accordance with 43 CFR 3162.7-1.

3. The plastic pit liner shall be torn and perforated before backfilling of the reserve pit.

4. Before any dirt work to restore the location takes place, the reserve pit will be completely dry and all cans, barrels, pipe, etc. will be removed.

   Other waste and spoil materials will be disposed of immediately upon completion of drilling and workover activities.

5. The reserve pit and that portion of the location and access road not needed for production facilities/operations will be reclaimed within one hundred twenty (120) days from the date of well completion, weather permitting.

6. If the well is a producer, Equitable Resources Energy Company will, upgrade and maintain access roads as necessary to prevent soil erosion, and accommodate year round traffic. Reshape areas unnecessary to operations, distribute topsoil, disk and seed all disturbed areas outside the work area according to the recommended seed mixture. Perennial vegetation must be established. Additional work shall be required in case of seeding failures, etc.

   If the well is abandoned/dry hole, Equitable Resources

Energy Company will, restore the access road and location to approximately the original contours. During reclamation of the site, push the fill material into cuts and up over the backslope. Leave no depressions that will trap water or form ponds. Distribute topsoil evenly over the location, and seed according to the above seed mixture. The access road and location shall be ripped or disked prior to seeding. Perennial vegetation must be established. Additional work shall be required in case of seeding failures, etc.

Seedbed will be prepared by disking, following the natural contours. Seed will be drilled on contours at a depth no greater than one-half inch (1/2"). In areas that cannot be drilled, seed will be broadcast at double the seeding rate and harrowed into soil. Certified seed will be used whenever available.

Fall seeding will be completed after September 15 and prior to prolonged ground frost. Spring seeding, to be effective, will be completed after the frost has left the ground and prior to May 15th.

7. Upon completion of backfilling, leveling and recontouring, the stockpiled topsoil will be evenly spread over the reclaimed area(s). Prior to reseeding, all disturbed surfaces will be scarified and left with a rough surface. No depressions will be left that would trap water and form ponds. All disturbed surfaces will be reseeded with the seed mixture stipulated by the B.L.M.

   Seed will be drilled on the contour to a approximate depth of one-half (1/2) inch. All seeding will be conducted after September 15 and prior to ground frost. Spring seeding will be done after the frost leaves the ground and no later than May 15. If the seeding is unsuccessful, Equitable Resources may be required to make subsequent seedings.

B. Dry Hole/Abandoned Location

1. On lands administered by the Bureau of Land Management, abandoned well sites, roads, or other disturbed areas will be restored to near their original condition. This procedure will include:

   (c) ensuring revegetation of the disturbed areas to the specifications of the Bureau of Land Management at the time of abandonment.

2. All disturbed surfaces will be recontoured to the approximate natural contours and reseeded according to BLM specifications. Reclamation of the well pad and access road will be performed as soon as practical after final abandonment and reseeding operations will be performed in the fall or spring following completion of reclamation operations.

11. Surface Ownership:

The well site and proposed access road are situated on surface lands administered by

Bureau of Land Management
Vernal District Office
Vernal, Utah

12. Other Information:

A. Topographic and geologic features of the area (reference Topographic Map #A) are:

The proposed drill site is located in the Monument Butte oil field, which lies in a large basin formed by the Uinta Mountains to the North and the Bookcliff Mountains to the South. The site is located approximately 15 miles Northwest of the Green River,which is the major drainage for this area, and approximately 13 miles Southwest of Myton Utah.

This basin floor is interlaced with numerous canyons and ridges formed by the non-perennial streams of the area. The sides of these canyons are steep and ledges formed in sandstone, conglomerate deposits and shale are common in this area.

The geologic structures that are visible in the area are of the Uinta formation (Eocene Epoch) tertiary period and the cobblestone and younger alluvial deposits from the Quaternary period.

The soils in the semi-arid area of the Williams Fork Formation (Upper Cretaceous) and Wasatch Formation (Eocene) consist of light brownish gray clay (OL) to sand soil (SM-ML) type with poorly graded gravels.

Outcrops of sandstone ledges, conglomerate deposits and shale are common in this area.

The topsoils in the area range from a sandy clay (SM-ML)

type soil to a clayey (OL) soil.

The majority of the numerous washes and draws in the area are of a non-perennial nature flowing during the early spring run-off and heavy rain storms of long duration which are rare as the normal annual rainfall in the area is only 8".

The flora of the area includes sagebrush, mountain mahogany, serviceberry, rabbit brush, greasewood, four-wing saltbush, Gambel scrub oak, willow, tamarack, shadscale, Spanish bayonet, indian rice grass, cheatgrass, wheatgrass, curly grass, crested wheatgrass, sweet clover, gum weed, foxtail, mustard, Canadian thistle, Russian thistle, Kochia, sunflowers and cacti.

The fauna of the area includes cattle, horses, elk, deer, coyotes, rabbits, rodents, lizards, bull snakes, rattle snakes, water snakes and horned toads. Birds of the area are ground sparrows, bluejays, bluebirds, magpies, ravens, rapters, morning doves, swallows, nighthawks, hummingbirds, and chukar.

B. The surface ownership is Federal. The surface use is grazing and petroleum production.

C. 1. The closest live water is the Green River which is approximately 15 miles Southwest of the proposed site.

2. There are no occupied dwellings in the immediate area

3. An archaeological report will be forwarded upon completion.

4. There are no reported restrictions or reservations noted on the oil and gas lease.

5. A silt catchment dam will not be required for this location.

13. Lessee's or Operator's Representative:

Equitable Resources Energy Company
1601 Lewis Avenue
P.O. Box 21017
Billings, Montana 59104
(8:00 a.m. to 5:00 p.m.)
(406)259-7860
FAX: (406)245-1361

Dave McCoskery, Home (406)248-3864

Dale Griffin, Home (303)824-3323

14. certification:

I hereby certify that I, or persons under my direct supervision, have inspected the proposed drillsite and access route; that I am familiar with the conditions which presently exist; that any statements made in this plan are, to the best of my knowledge, true and correct; and that the work associated with the operations proposed herein will be performed by Balcron Oil, a division of Equitable Resources Energy Company, and its contractors and subcontractors in conformity with this plan and the terms and conditions under which it is approved. This statement is subject to the provisions of 18 U.S.C. 1001 for the filing of a false statement.

September 27, 1996
Date

Bobbie Schuman
Bobbie Schuman
Coordinator of Environmental and Regulatory Affairs
Equitable Resources Energy Co.

EQUITABLE RESOURCES ENERGY COMPANY
WESTERN REGION

C

Well Prognosis

Well Name	Monument Fed. #13-4-9-16			Control Well	
Location	NW/SW Sec. 4-T9S-R16E (2050 fsl, 660 fwl)			Operator	EREC
County/State	Duchesne County, Utah			Well Name	Castle Peak Federal 43-5
Field	Mon. Butte	Well Type	Dev.	Location	NE/SE Sec. 5-T9S-R16E
GL (Ung)	5761.2	EST. KB	5772	KB	5796
		Total Depth	6000		

Formation Tops	Prognosis		Sample Top		Control Well	High/Low		
Formation	Depth	Datum	Depth	Datum	Datum	Prog	Control	Deviation
UINTA	surface							
GREEN RIVER	1722	4050			4070			
HORSEBENCH SS	2338	3434			3454			
2ND GARDEN GULCH	4040	1732			1752			
Y-2(PAY)	4346	1426			1446			
Y-3 (PAY)	4410	1362			1382			
Y-4 (PAY)	4522	1250			1270			
YELLOW MARKER	4677	1095			1115			
DOUGLAS CREEK	4830	942			962			
R-1 (PAY)	4860	912			932			
R-2 (PAY)	5007	765			785			
2ND DOUGLAS CREEK	5068	704			724			
G-1U (PAY)	5078	694			714			
G-1L (PAY)	5122	650			670			
GREEN MARKER	5209	563			583			
G-3 (PAY)	5284	488			508			
G-6 (PAY)	5504	268			288			
CARBONATE MARKER	5724	48			68			
B-1 (PAY)	5738	34			54			
TD	6000							

Samples

50' FROM 1700' TO 4100'
20' FROM 4100' TO TD
5' THROUGH EXPECTED PAY
5' THROUGH DRILLING BREAKS

DST,s

DST #1 NONE
DST #2
DST #3
DST #4

Wellsite Geologist

Name:
From: To:
Address:
Phone # wk.
hm.
Fax #

Logs

DLL FROM SURF CSNG TO TD
LDT/CNL FROM 4000' TO TD

Cores

Core #1
Core #2
Core #3
Core #4

Mud Logger

Company:
From: 1700' To: TD
Type: 2-MAN
Logger:
Phone #
Fax #

Comments:

Report To:	1st Name: DAVE BICKERSTAFF	Phone # (406)259-7860	wk. (406)245-2261	hm.
	2nd Name: KEVEN REINSCHMIDT	Phone # (406)259-7860	wk. (406)248-7026	hm.
Prepared By:	BICKERSTAFF 9/10/96	Phone #	wk.	hm.

D

EQUITABLE RESOURCES
ENERGY COMPANY
WESTERN REGION

DRILLING PROGRAM

WELL NAME: Monument Federal #13-4-9-16 DATE:9-26-96
PROSPECT/FIELD: Monument Butte
LOCATION: NW/SW Section 4 Twn.9S Rge.16E
COUNTY: Duchesne
STATE: Utah

TOTAL DEPTH: 6000'

HOLE SIZE	INTERVAL
12 1/4"	Surface to 260'
7 7/8"	260' to 6000'

CASING	INTERVAL		CASING		
STRING TYPE	FROM	TO	SIZE	WEIGHT	GRADE
Surface Casing	0'	260'	8 5/8"	24	J55
Production Casing	0'	6000'	5 1/2"	15.50	K55

CEMENT PROGRAM

Surface Casing	150 sacks class"G" with 2% CaCl and 1/4 lb/sack Flocele. (Cement will be circulated to surface.)
Production Casing	205 sacks 28:72 Poz. (28% POZ: 72% Class"C") with 10% Gel, 6.0 lbs/sk KOL SEAL & ¼ pps Cello Flake.(Wt.=11.09 ppg,Yd =3.30 Cu.Ft/Sk Comp. Stght @ 72 Hrs=575) Tailed with 400 sacks 50:50 POZ(50% POZ: 50% Class"G") with 2% Gel, 0.3% FL-52, ¼ pps Cello Flakes & 2.0 pps KOL SEAL.(Wt.=14.30 ppg, Yd=1.25 Ft.Cu./Sk, Comp Strght @ 75 Hrs=2700) (Actual cement volumes to be calculated from caliper log with cement top at 2000')

PRELIMINARY DRILLING FLUID PROGRAM

TYPE	FROM	TO	WEIGHT	PLAS. VIS	YIELD POINT
Air and Air Mist	0'	260'	N.A.	N.A.	N.A.
Air/Air Mist/KCl wtr	260'	T.D.	8.7-8.9	N.A.	N.A.

COMMENTS

1.) No cores or tests are planned for this well.

D

EQUITABLE RESOURCES ENERGY COMPANY

Operator: EREC	Well Name: MF 13-4-9-16
Project ID:	Location: Duchesne / Utah

Design Parameters:

Mud weight (8.70 ppg)	: 0.452	psi/ft
Shut in surface pressure	: 2112	psi
Internal gradient (burst)	: 0.100	psi/ft
Annular gradient (burst)	: 0.000	psi/ft

Tensile load is determined using air weight
Service rating is "Sweet"

Design Factors:

Collapse	: 1.125	
Burst	: 1.00	
8 Round	: 1.80	(J)
Buttress	: 1.60	(J)
Body Yield	: 1.50	(B)

	Length (feet)	Size (in.)	Weight (lb/ft)	Grade	Joint	Depth (feet)	Drift (in.)	Cost
1	6,000	5-1/2"	15.50	K-55	ST&C	6,000	4.825	

	Collapse Load (psi)	Collapse Strgth (psi)	Collapse S.F.	Burst Load (psi)	Min Int Yield Strgth (psi)	Burst S.F.	Tension Load (kips)	Tension Strgth (kips)	Tension S.F.
1	2712	4040	1.490	2712	4810	1.77	93.00	222	2.39 J

Prepared by : *McCoskery, Billings, Montana*
Date : 09-26-1996
Remarks :
Design is for a Production string.
Minimum segment length for the 6,000 foot well is 1,500 feet.
The mud gradient and bottom hole pressures (for burst) are 0.452 psi/ft and 2,712 psi, respectively.

NOTE: The design factors used in this casing string design are as shown above. As a general guideline, Lone Star Steel recommends using minimum design factors of 1.125 - collapse (with evacuated casing), 1.0 - (uniaxial) burst, 1.8 - API 8rd tension, 1.6 - buttress tension, 1.5 - body yield tension, and 1.6 - EUE 8rd tension. Collapse strength under axial tension was calculated based on the Westcott, Dunlop and Kemler curve. Engineering responsibility for use of this design will be that of the purchaser.
Costs for this design are based on a 1987 pricing model. (Version 1.07)

EXHIBIT "E"

A. Hazardous chemicals 10,000 pounds of which will most likely be used, produced, stored, transported, or disposed of in association with the proposed action of drilling, completing, and producing this well:

We anticipate that none of the hazardous chemicals in quantities of 10,000 pounds or more will be associated with these operations.

B. Extremely hazardous substances threshold quantities which will be used, produced, stored, transported, or disposed of in association with the proposed action of drilling, completing, and producing this well:

We anticipate that none of the extremely hazardous substances in threshold quantities per 40 CFR 355 will be associated with these operations.

3/28/95
/rs

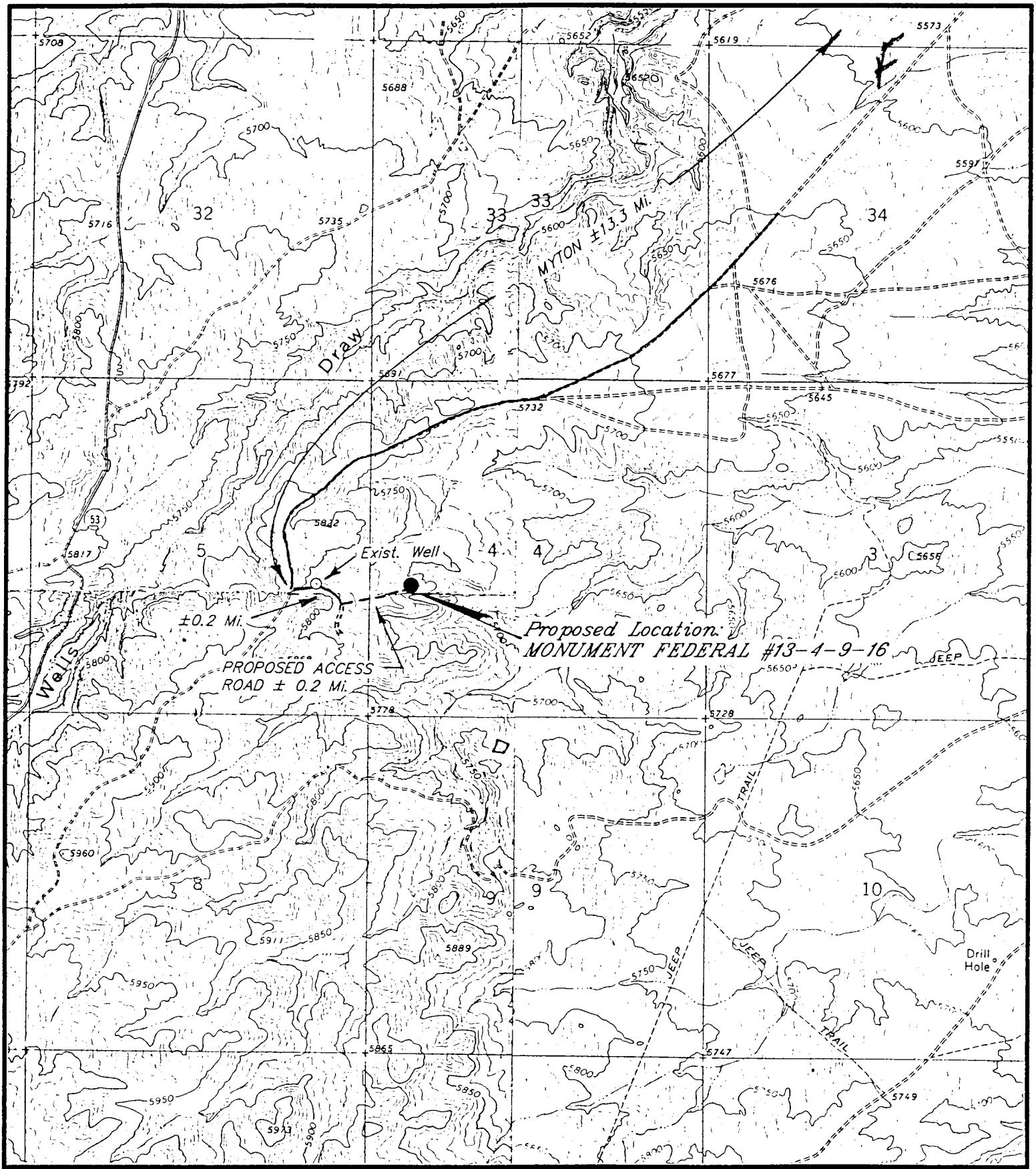

EQUITABLE RESOURCES CO.

MONUMENT FEDERAL #13-4-9-16
SEC. 4, T9S, R16E, S.L.B.&M.
TOPO "B"

N

SCALE: 1" = 2000'

Tri State
Land Surveying. Inc.
(801) 781-2501
38 WEST 100 NORTH VERNAL, UTAH 84078

Form 3160-5
(June 1990)

UNITED STATES
DEPARTMENT OF THE INTERIOR
BUREAU OF LAND MANAGEMENT

FORM APPROVED
Budget Bureau No. 1004-0135
Expires: March 31, 1993

SUNDRY NOTICES AND REPORTS ON WELLS

Do not use this form for proposals to drill or to deepen or reentry to a different reservoir.
Use "APPLICATION FOR PERMIT—" for such proposals

SUBMIT IN TRIPLICATE

5. Lease Designation and Serial No. See attached listing
6. If Indian, Allottee or Tribe Name n/a
7. If Unit or CA, Agreement Designation n/a
8. Well Name and No. See attached listing
9. API Well No.
10. Field and Pool, or Exploratory Area Monument Butte/Grn River
11. County or Parish, State See attached listing

1. Type of Well
☒ Oil Well ☐ Gas Well ☐ Other
2. Name of Operator
Equitable Resources Energy Company
3. Address and Telephone No.
1601 Lewis Avenue; Billings, MT 59102 (406) 259-7860
4. Location of Well (Footage, Sec., T., R., M., or Survey Description)
See attached listing

12. CHECK APPROPRIATE BOX(s) TO INDICATE NATURE OF NOTICE, REPORT, OR OTHER DATA

TYPE OF SUBMISSION	TYPE OF ACTION	
☐ Notice of Intent	☐ Abandonment	☐ Change of Plans
☒ Subsequent Report	☐ Recompletion	☐ New Construction
☐ Final Abandonment Notice	☐ Plugging Back	☐ Non-Routine Fracturing
	☐ Casing Repair	☐ Water Shut-Off
	☐ Altering Casing	☐ Conversion to Injection
	☒ Other paleontology Reports	☐ Dispose Water (Note: Report results of multiple completion on Well Completion or Recompletion Report and Log form.)

13. Describe Proposed or Completed Operations (Clearly state all pertinent details, and give pertinent dates, including estimated date of starting any proposed work. If well is directionally drilled, give subsurface locations and measured and true vertical depths for all markers and zones pertinent to this work.)*

Attached are te paleontology reports which were done on proposed wellsites, access routes, and gasline routes for the wells on the attached listing.

ORIGINAL: Bureau of Land Management (Vernal, UT)
COPY: Utah Division of Oil, Gas and Mining

RECEIVED
OCT 2 2 1996
DIV OF OIL, GAS & MINING

14. I hereby certify that the foregoing is true and correct
Signed Bobbie Schuman Title Regulatory and Environmental Specialist Date October 21, 1996
Bobbie Schuman
(This space for Federal or State office use)
Approved by _____ Title _____ Date _____
Conditions of approval, if any:

Title 18 U.S.C. Section 1001, makes it a crime for any person knowingly and willfully to make to any department or agency of the United States any false, fictitious or fraudulent statements or representations as to any matter within its jurisdiction.

*See Instruction on Reverse Side

RECEIVED
OCT
DIV OF OIL, GAS & MINING

EQUITABLE RESOURCES ENERGY CO.

MONUMENT FEDERAL #13-4-9-16Y 43-013-31716

NW/SW SECTION 4, T9S, R16E, SLB&M

Duchesne County, Utah

PALEONTOLOGY REPORT

WELLPAD LOCATION, ACCESS ROAD, & GAS LINE

BY

ALDEN H. HAMBLIN
PALEONTOLOGIST
P.O. BOX 731
VERNAL, UTAH 84078

OCTOBER 14, 1996

RECEIVED
OCT
DIV OF OIL, GAS & MINING

RESULTS OF PALEONTOLOGY SURVEY AT EQUITABLE RESOURCES ENERGY CO. MONUMENT FEDERAL #13-4-9-16, NW/SW Section 4, T9S, R16E, S.L.B.&M, Duchesne Co., Utah.

Description of Geology and Topography-

This well location is 9 miles south and 3 miles west of Myton, Utah, about 1 mile east of Wells Draw. This well location sits on a fairly flat area with a gentle slope to the east. The access road runs east from an existing road and is covered by reddish silty sand and rock fragments. The location also has a cover of tan rock fragments and sand, but this cover appears to be fairly thin.

All rock outcrops in the area are of the Middle Eocene Uinta Formation, known for its fossil vertebrate fauna of mammals, turtles, crocodilians, and occasional fish remains and plant impressions.

Paleontological material found -

No fossils were found on the wellpad, road or gas line.

Recommendations-

There is always some potential for encountering significant fossils when working in the Uinta Formation. If important looking fossil material is found during construction, a paleontologist should be called to evaluate it.

No other recommendations are being made for paleontology at this location.

Alden H. Hamblin
Paleontologist

Date October 14, 1996

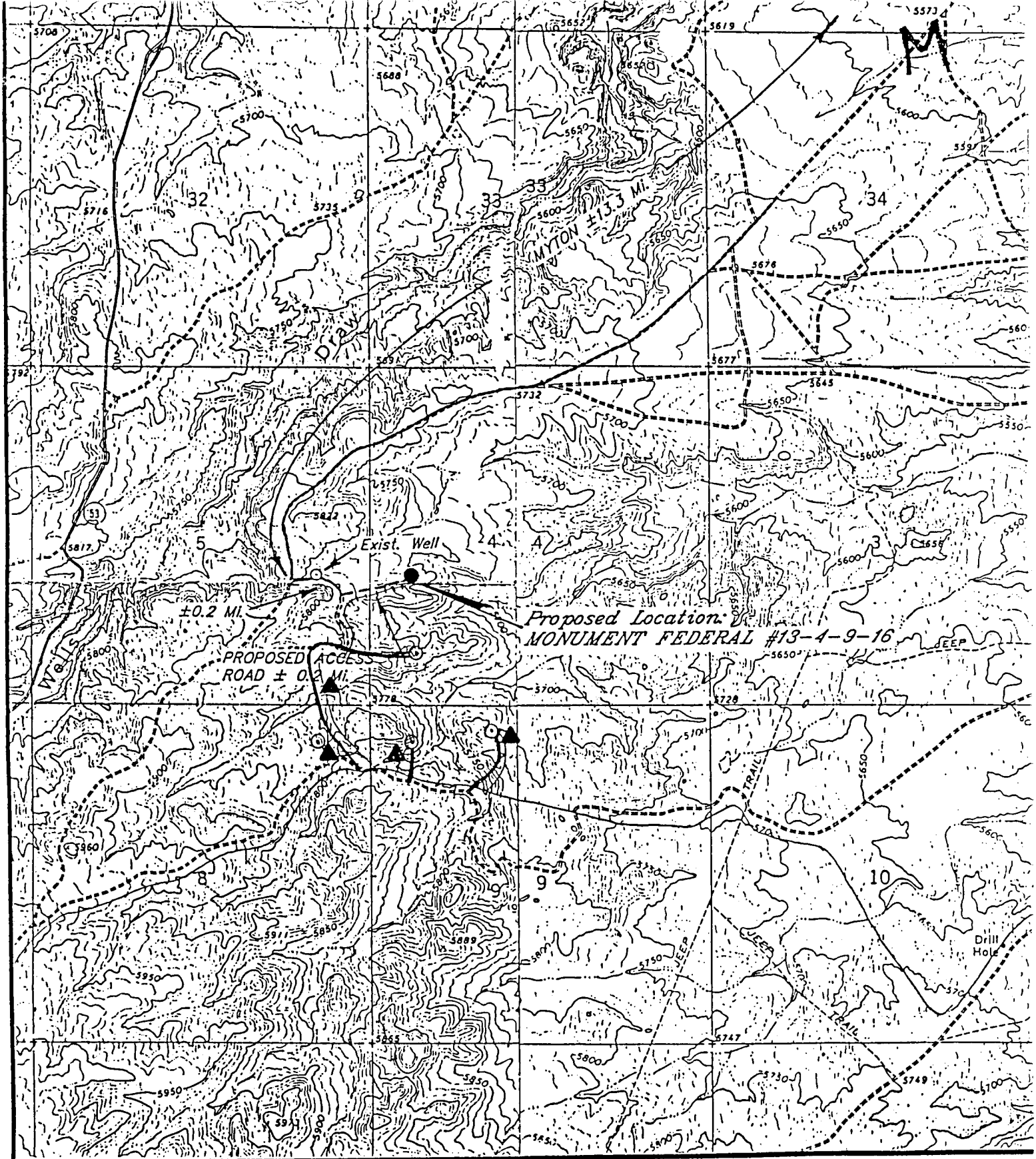

▲ existing gas meter
⊙ existing location
—— existing poly surface line
—— existing road

△ proposed gas meter
● proposed location
+++ proposed poly surface line
- - - - proposed road

N

SCALE: 1" = 2000'

PROPOSED GAS GATHERING

Monument Federal #13-4-9-16
Sec. 4, T9S, R16E

EQUITABLE RESOURCES ENERGY COMPANY
WESTERN REGION

Form 3160-3
(November 1983)
(formerly 9-331C)

CONFIDENTIAL

SUBMIT IN TRIPLICATE*
(Other instructions on reverse side)

Form approved.
Budget Bureau No. 1004-0136
Expires August 31, 1985

DEPARTMENT OF THE INTERIOR
BUREAU OF LAND MANAGEMENT

CONFIDENTIAL

APPLICATION FOR PERMIT TO DRILL, DEEPEN, OR PLUG BACK

5. LEASE DESIGNATION AND SERIAL NO.: UTU-73086

6. IF INDIAN, ALLOTTEE OR TRIBE NAME: n/a

7. UNIT AGREEMENT NAME: n/a

8. FARM OR LEASE NAME: Monument Federal

9. WELL NO.: #13-4-9-16

10. FIELD AND POOL, OR WILDCAT: Monument Butte/Green River

11. SEC., T., R., M., OR BLK. AND SURVEY OR AREA: Sec. 4, T9S, R16E

12. COUNTY OR PARISH: Duchesne

13. STATE: UTAH

1a. TYPE OF WORK: DRILL [X] DEEPEN [ ] PLUG BACK [ ]

b. TYPE OF WELL: OIL WELL [X] GAS WELL [ ] OTHER SINGLE ZONE [ ] MULTIPLE ZONE [ ]

2. NAME OF OPERATOR: Equitable Resources Energy Company

3. ADDRESS OF OPERATOR: 1601 Lewis Avenue; Billings, MT 59102 (406) 259-7860

4. LOCATION OF WELL (Report location clearly and in accordance with any State requirements.*)
At surface: NW SW Section 4, T9S, R16E
At proposed prod. zone: 2050' FSL, 660' FWL

14. DISTANCE IN MILES AND DIRECTION FROM NEAREST TOWN OR POST OFFICE*: From Myton, Utah approximately 10 miles SW

15. DISTANCE FROM PROPOSED* LOCATION TO NEAREST PROPERTY OR LEASE LINE, FT. (Also to nearest drlg. unit line, if any):

16. NO. OF ACRES IN LEASE:

17. NO. OF ACRES ASSIGNED TO THIS WELL:

18. DISTANCE FROM PROPOSED LOCATION* TO NEAREST WELL, DRILLING, COMPLETED, OR APPLIED FOR, ON THIS LEASE, FT.:

19. PROPOSED DEPTH: 6,000'

20. ROTARY OR CABLE TOOLS: Rotary

21. ELEVATIONS (Show whether DF, RT, GR, etc.): GL 5761.2'

22. APPROX. DATE WORK WILL START*:

23. PROPOSED CASING AND CEMENTING PROGRAM

SIZE OF HOLE	SIZE OF CASING	WEIGHT PER FOOT	SETTING DEPTH	QUANTITY OF CEMENT
See Drilling Program/Casing Design				

Operator plans to drill this well in accordance with the attached EXHIBITS. A listing of EXHIBITS is also attached.

CONFIDENTIAL

SELF CERTIFICATION: I hereby certify that I am authorized, by proper lease interest owner, to conduct these operations associated with the application. Bond coverage pursuant to 43 CFR 3104 for lease activities is being provided by Equitable Resources Energy Company as principal and Safeco Insurance Company of America as surety under BLM Bond No. MT 0576 (Nationwide Oil & Gas Bond #5547188) who will be responsible for compliance with all of the terms and conditions of that portion of the lease associated with this application.

ORIGINAL: Bureau of Land Management (Vernal, UT)
COPY: Utah Division of Oil, Gas and Mining

IN ABOVE SPACE DESCRIBE PROPOSED PROGRAM: If proposal is to deepen or plug back, give data on present productive zone and proposed new productive zone. If proposal is to drill or deepen directionally, give pertinent data on subsurface locations and measured and true vertical depths. Give blowout preventer program, if any.

24. SIGNED Bobbie Schuman (Bobbie Schuman) TITLE Regulatory and Environmental Specialist DATE September 25, 1996

(This space for Federal or State office use)

PERMIT NO. 43-013-31716 APPROVAL DATE

APPROVED BY T.A. Matthews TITLE Petroleum Engineer DATE 11/25/96

CONDITIONS OF APPROVAL, IF ANY:

*See Instructions On Reverse Side

Title 18 U.S.C. Section 1001, makes it a crime for any person knowingly and willfully to make to any department or agency of the United States any false, fictitious or fraudulent statements or representations as to any matter within its jurisdiction.

T9S, R16E, S.L.B.&M.

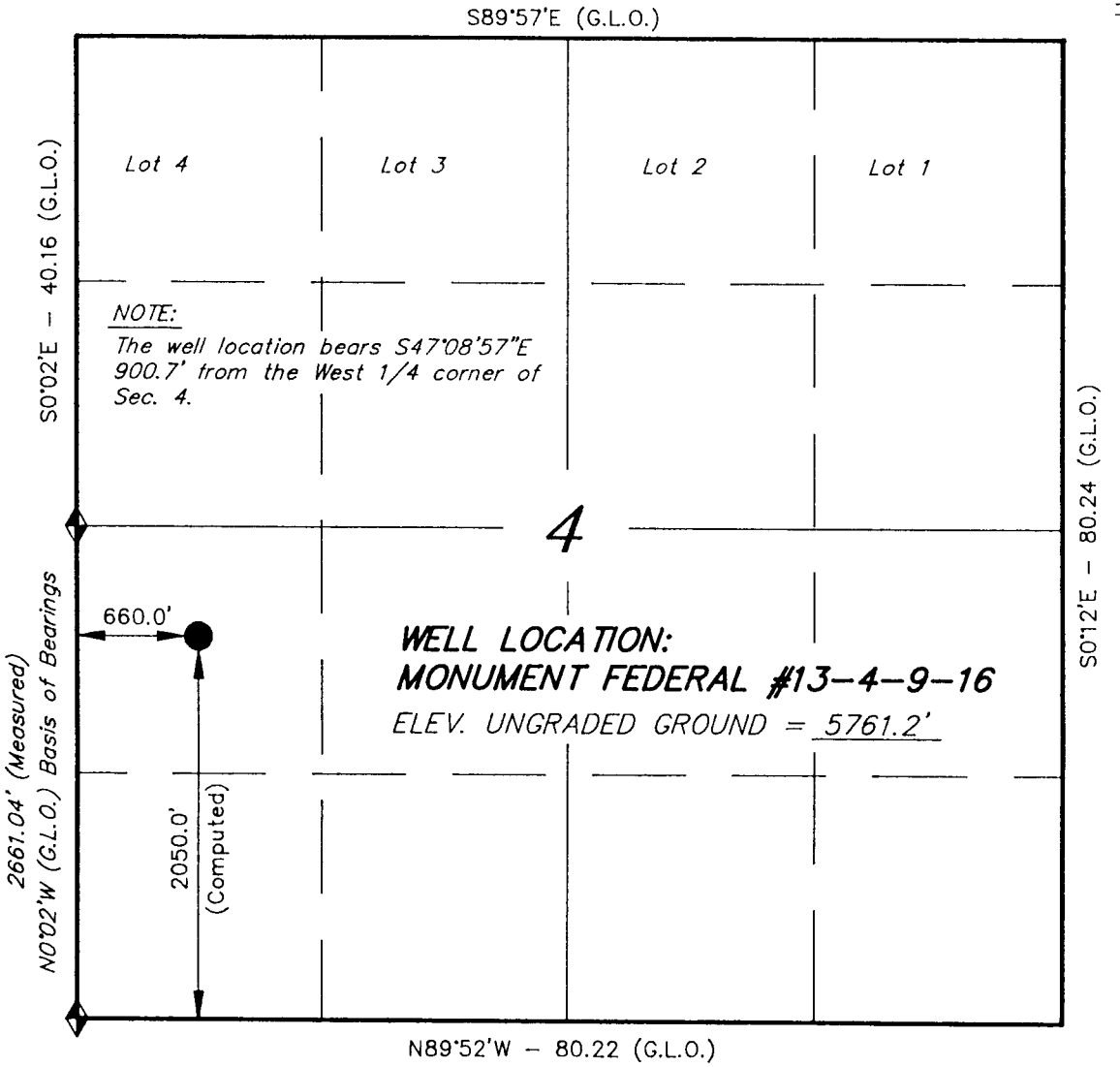

◆ = SECTION CORNERS LOCATED

BASIS OF ELEV; U.S.G.S. 7-1/2 min QUAD (MYTON SW)

EQUITABLE RESOURCES ENERGY CO.

WELL LOCATION, MONUMENT FEDERAL #13-4-9-16, LOCATED AS SHOWN IN THE NW 1/4 SW 1/4 OF SECTION 4, T9S, R16E, S.L.B.&M. DUCHESNE COUNTY, UTAH.

N

THIS IS TO CERTIFY THAT THE ABOVE PLAT WAS PREPARED FROM FIELD NOTES OF ACTUAL SURVEYS MADE BY ME OR UNDER MY SUPERVISION AND THAT THE SAME ARE TRUE AND CORRECT TO THE BEST OF MY KNOWLEDGE AND BELIEF.

REGISTERED LAND SURVEYOR
REGISTRATION No. 174102
STATE OF UTAH

REGISTERED LAND SURVEYOR GENE STEWART STATE OF UTAH

TRI STATE LAND SURVEYING & CONSULTING
38 WEST 100 NORTH – VERNAL, UTAH 84078
(801) 781-2501

SCALE: 1" = 1000'	SURVEYED BY: G.S.
DATE: 9-8-96	WEATHER: WARM
NOTES:	FILE #

WORKSHEET
APPLICATION FOR PERMIT TO DRILL

APD RECEIVED: 09/30/96

API NO. ASSIGNED: 43-013-31716

WELL NAME: MONUMENT FEDERAL 13-4-9-16
OPERATOR: EQUITABLE RESOURCES (N9890)

PROPOSED LOCATION:
NWSW 04 - T09S - R16E
SURFACE: 2050-FSL-0660-FWL
BOTTOM: 2050-FSL-0660-FWL
DUCHESNE COUNTY
MONUMENT BUTTE FIELD (105)

LEASE TYPE: FED
LEASE NUMBER: UTU - 73086

PROPOSED PRODUCING FORMATION: GRRV

INSPECT LOCATION BY: / /		
TECH REVIEW	Initials	Date
Engineering		
Geology		
Surface		

RECEIVED AND/OR REVIEWED:

✓ Plat
✓ Bond: Federal [✓] State [] Fee []
(Number 5547188)
N Potash (Y/N)
N Oil shale (Y/N)
✓ Water permit
(Number JOE SHIELDS)
N RDCC Review (Y/N)
(Date:)

LOCATION AND SITING:

___ R649-2-3. Unit: ___

✓ R649-3-2. General.

___ R649-3-3. Exception.

___ Drilling Unit.
Board Cause no: ___
Date: ___

COMMENTS: ___

STIPULATIONS: ___

OPERATOR: EQUITABLE RESOURCES
FIELD: MONUMENT BUTTE (105)
SECTION: 31 T8S, R16E & 4,6,8 T9S R16E
COUNTY: DUCHESNE
SPACING: UAC R649-3-2

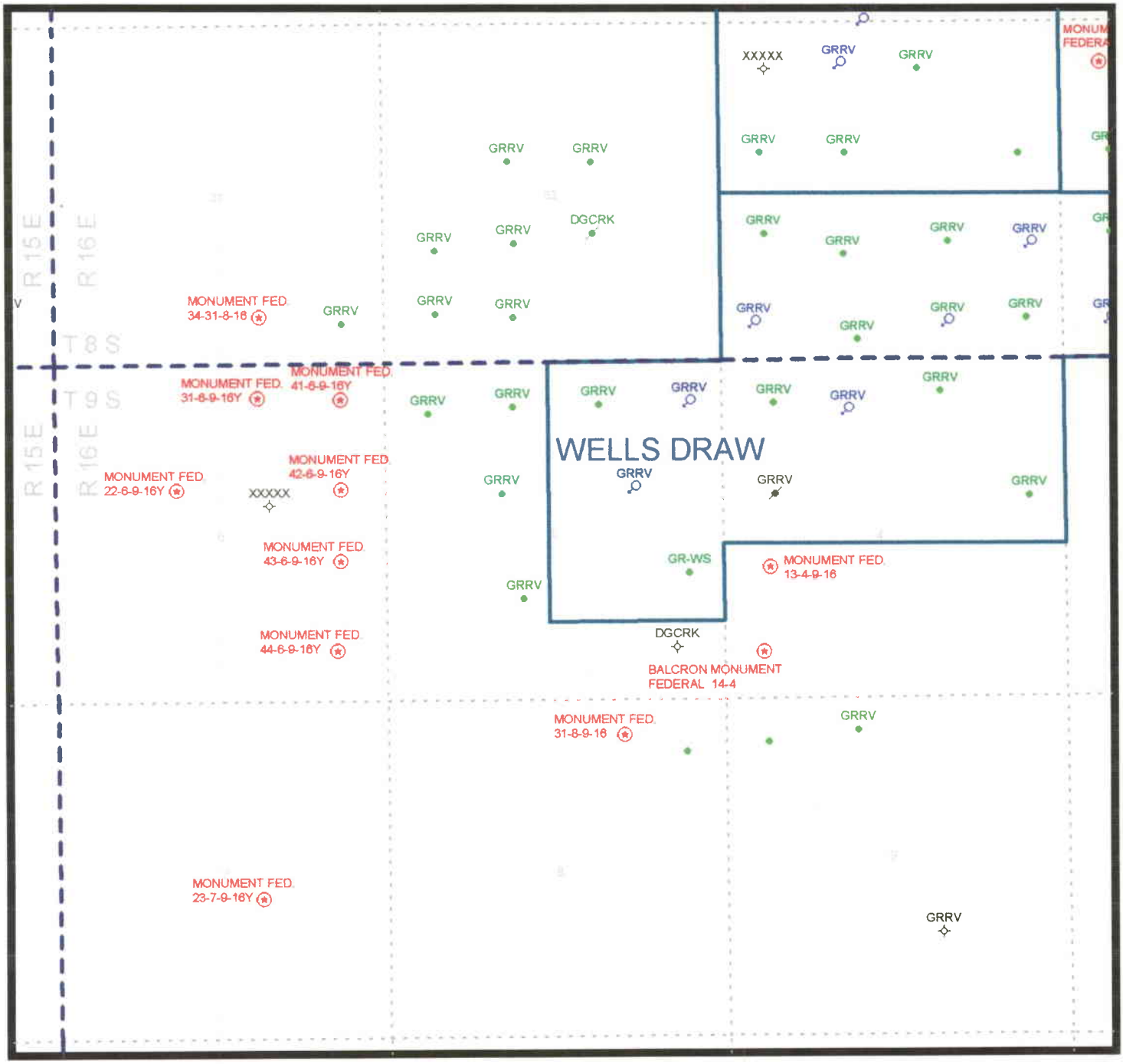

PREPARED:
DATE: 30-SEPT-96

STATE OF UTAH, DIV OF OIL, GAS & MINERALS

Operator: EQUITABLE RESOURCES	Well Name: MON FED 13-4-9-16
Project ID: 43-013-31716	Location: SEC. 04 - T09S - R16E

Design Parameters:

Mud weight (8.90 ppg)	: 0.462	psi/ft
Shut in surface pressure	: 2402	psi
Internal gradient (burst)	: 0.062	psi/ft
Annular gradient (burst)	: 0.000	psi/ft

Tensile load is determined using air weight

Service rating is "Sweet"

Design Factors:

Collapse	: 1.125	
Burst	: 1.00	
8 Round	: 1.80	(J)
Buttress	: 1.60	(J)
Other	: 1.50	(J)
Body Yield	: 1.50	(B)

	Length (feet)	Size (in.)	Weight (lb/ft)	Grade	Joint	Depth (feet)	Drift (in.)	Cost
1	6,000	5.500	15.50	K-55	ST&C	6,000	4.825	

	Collapse Load (psi)	Collapse Strgth (psi)	Collapse S.F.	Burst Load (psi)	Min Int Yield Strgth (psi)	Burst S.F.	Tension Load (kips)	Tension Strgth (kips)	Tension S.F.
1	2774	4040	1.456	2774	4810	1.73	93.00	222	2.39 J

Prepared by : MATTHEWS, Salt Lake City, Utah
Date : 11-25-1996
Remarks :

GRRV

Minimum segment length for the 6,000 foot well is 1,500 feet.

SICP is based on the ideal gas law, a gas gravity of 0.69, and a mean gas temperature of 116°F (Surface 74°F , BHT 158°F & temp. gradient 1.400°/100 ft.)

String type: Production

The mud gradient and bottom hole pressures (for burst) are 0.462 psi/ft and 2,774 psi, respectively.

NOTE: The design factors used in this casing string design are as shown above. As a general guideline, Lone Star Steel recommends using minimum design factors of 1.125 - collapse (with evacuated casing), 1.0 - (uniaxial) burst, 1.8 - API 8rd tension, 1.6 - buttress tension, 1.5 - body yield tension, and 1.6 - EUE 8rd tension. Collapse strength under axial tension was calculated based on the Westcott, Dunlop and Kemler curve. Engineering responsibility for use of this design will be that of the purchaser.
Costs for this design are based on a 1987 pricing model. (Version 1.07)

State of Utah
DEPARTMENT OF NATURAL RESOURCES
DIVISION OF OIL, GAS AND MINING

Michael O. Leavitt
Governor
Ted Stewart
Executive Director
James W. Carter
Division Director

355 West North Temple
3 Triad Center, Suite 350
Salt Lake City, Utah 84180-1203
801-538-5340
801-359-3940 (Fax)
801-538-5319 (TDD)

November 25, 1996

Equitable Resources Energy Company
1601 Lewis Avenue
Billings, Montana 59102

Re: Monument Federal 13-4-9-16 Well, 2050' FSL, 660' FWL, NW SW, Sec. 4, T. 9 S., R. 16 E., Duchesne County, Utah

Gentlemen:

Pursuant to the provisions and requirements of Utah Code Ann. 40-6-1 et seq., Utah Administrative Code R649-3-1 et seq., and the attached Conditions of Approval, approval to drill the referenced well is granted.

This approval shall expire one year from the above date unless substantial and continuous operation is underway, or a request for extension is made prior to the expiration date. The API identification number assigned to this well is 43-013-31716.

Sincerely,

R. J. Firth
Associate Director

lwp
Enclosures
cc: Duchesne County Assessor
Bureau of Land Management, Vernal District Office

Operator: Equitable Resources Energy Company

Well Name & Number: Monument Federal 13-4-9-16

API Number: 43-013-31716

Lease: UTU-73086

Location: NW SW **Sec.** 4 **T.** 9 S. **R.** 16 E.

Conditions of Approval

1. General
   Compliance with the requirements of Utah Admin. R. 649-1 et seq., the Oil and Gas Conservation General Rules, and the applicable terms and provisions of the approved Application for Permit to Drill.

2. Notification Requirements
   Notify the Division within 24 hours following spudding the well or commencing drilling operations. Contact Jimmie Thompson at (801)538-5336.

   Notify the Division prior to commencing operations to plug and abandon the well. Contact Frank Matthews at (801)538-5334 or Mike Hebertson at (801)538-5333.

3. Reporting Requirements
   All required reports, forms and submittals shall be promptly filed with the Division, including but not limited to the Entity Action Form (Form 6), Report of Water Encountered During Drilling (Form 7), Weekly Progress Reports for drilling and completion operations, and Sundry Notices and Reports on Wells requesting approval of change of plans or other operational actions.

Form 3160-3
(November 1983)
(formerly 9-331C)

CONFIDENTIAL

SUBMIT IN TRIPLICATE*
(Other instructions on reverse side)

Form approved.
Budget Bureau No. 1004-0136
Expires August 31, 1985

DEPARTMENT OF THE INTERIOR
BUREAU OF LAND MANAGEMENT

CONFIDENTIAL

APPLICATION FOR PERMIT TO DRILL, DEEPEN, OR PLUG BACK

5. LEASE DESIGNATION AND SERIAL NO.: UTU-73086

6. IF INDIAN, ALLOTTEE OR TRIBE NAME: n/a

7. UNIT AGREEMENT NAME: n/a

8. FARM OR LEASE NAME: Monument Federal

9. WELL NO.: #13-4-9-16

10. FIELD AND POOL, OR WILDCAT: Monument Butte/Green River

11. SEC., T., R., M., OR BLK. AND SURVEY OR AREA: Sec. 4, T9S, R16E

1a. TYPE OF WORK: DRILL [X] DEEPEN [ ] PLUG BACK [ ]

b. TYPE OF WELL: OIL WELL [X] GAS WELL [ ] OTHER SINGLE ZONE [ ] MULTIPLE ZONE [ ]

2. NAME OF OPERATOR: Equitable Resources Energy Company

3. ADDRESS OF OPERATOR: 1601 Lewis Avenue; Billings, MT 59102 (406) 259-7860

4. LOCATION OF WELL (Report location clearly and in accordance with any State requirements.*)
At surface: NW SW Section 4, T9S, R16E
At proposed prod. zone: 2050' FSL, 660' FNL

12. COUNTY OR PARISH: Duchesne

13. STATE: UTAH

14. DISTANCE IN MILES AND DIRECTION FROM NEAREST TOWN OR POST OFFICE*: From Myton, Utah approximately 10 miles SW

15. DISTANCE FROM PROPOSED* LOCATION TO NEAREST PROPERTY OR LEASE LINE, FT. (Also to nearest drlg. unit line, if any):

16. NO. OF ACRES IN LEASE:

17. NO. OF ACRES ASSIGNED TO THIS WELL:

18. DISTANCE FROM PROPOSED LOCATION* TO NEAREST WELL, DRILLING, COMPLETED, OR APPLIED FOR, ON THIS LEASE, FT.:

19. PROPOSED DEPTH: 6,000'

20. ROTARY OR CABLE TOOLS: Rotary

21. ELEVATIONS (Show whether DF, RT, GR, etc.): GL 5761.2'

22. APPROX. DATE WORK WILL START*:

23. PROPOSED CASING AND CEMENTING PROGRAM

SIZE OF HOLE	SIZE OF CASING	WEIGHT PER FOOT	SETTING DEPTH	QUANTITY OF CEMENT
See Drilling Program/Casing Design				

Operator plans to drill this well in accordance with the attached EXHIBITS. A listing of EXHIBITS is also attached.

RECEIVED
SEP 30 1996

SELF CERTIFICATION: I hereby certify that I am authorized, by proper lease interest owner, to conduct these operations associated with the application. Bond coverage pursuant to 43 CFR 3104 for lease activities is being provided by Equitable Resources Energy Company as principal and Safeco Insurance Company of America as surety under BLM Bond No. MT 0576 (Nationwide Oil & Gas Bond #5547188) who will be responsible for compliance with all of the terms and conditions of that portion of the lease associated with this application.

ORIGINAL: Bureau of Land Management (Vernal, UT)
COPY: Utah Division of Oil, Gas and Mining

IN ABOVE SPACE DESCRIBE PROPOSED PROGRAM: If proposal is to deepen or plug back, give data on present productive zone and proposed new productive zone. If proposal is to drill or deepen directionally, give pertinent data on subsurface locations and measured and true vertical depths. Give blowout preventer program, if any.

24.
SIGNED Bobbie Schuman — TITLE Regulatory and Environmental Specialist — DATE September 25, 1996
Bobbie Schuman

(This space for Federal or State office use)

PERMIT NO. _____ APPROVAL DATE _____

APPROVED BY Jerry Kenczka — TITLE ACTING Assistant Field Manager Mineral Resources — DATE NOV 26 1996

CONDITIONS OF APPROVAL, IF ANY:

CONDITIONS OF APPROVAL ATTACHED TO OPERATOR'S COPY

NOTICE OF APPROVAL

UT080-6M-224

*See Instructions On Reverse Side

Title 18 U.S.C. Section 1001, makes it a crime for any person knowingly and willfully to make to any department or agency of the United States any false, fictitious or fraudulent statements or representations as to any matter within its jurisdiction.

CONDITIONS OF APPROVAL
APPLICATION FOR PERMIT TO DRILL

Company/Operator: Equitable Resources Energy Company

Well Name & Number: Equitable Monument Federal 13-4-9-16

API Number: 43-013-31716

Lease Number: U - 73086

Location: NWSW Sec. 04 T. 9S R. 16E

NOTIFICATION REQUIREMENTS

Location Construction	-	at least forty-eight (48) hours prior to construction of location and access roads.
Location Completion	-	prior to moving on the drilling rig.
Spud Notice	-	at least twenty-four (24) hours prior to spudding the well.
Casing String and Cementing	-	at least twenty-four (24) hours prior to running casing and cementing all casing strings.
BOP and Related Equipment Tests	-	at least twenty-four (24) hours prior to initiating pressure tests.
First Production Notice	-	within five (5) business days after new well begins, or production resumes after well has been off production for more than ninety (90) days.

For more specific details on notification requirements, please check the Conditions of Approval for Notice to Drill and Surface Use Program.

CONDITIONS OF APPROVAL FOR NOTICE TO DRILL

Approval of this application does not warrant or certify that the applicant holds legal or equitable title to those rights in the subject lease which would entitle the applicant to conduct operations thereon.

All lease and/or unit operations will be conducted in such a manner that full compliance is made with applicable laws, regulations (43 CFR 3100), Onshore Oil and Gas Orders, and the approved plan of operations. The operator is fully responsible for the actions of his subcontractors. A copy of these conditions will be furnished the field representative to insure compliance.

Be aware fire restrictions may be in effect when location is being constructed and/or when well is being drilled. Contact the appropriate Surface Management Agency for information.

A. DRILLING PROGRAM

1. Estimated Depth at Which Oil, Gas, Water, or Other Mineral Bearing Zones are Expected to be Encountered

Report ALL water shows and water-bearing sands to Tim Ingwell of this office **prior to setting the next casing string or requesting plugging orders**. Faxed ccpies of State of Utah form OGC-8-X are acceptable. If noticeable water flows are detected, submit samples to this office along with any water analyses conducted.

All usable water and prospectively valuable minerals (as described by BLM at onsite) encountered during drilling, will be recorded by depth and adequately protected. All oil and gas shows will be tested to determine commercial potential.

2. Pressure Control Equipment

The BOP and related equipment shall meet the minimum requirements of Onshore Oil and Gas Order No. 2 for equipment and testing requirements, procedures, etc., for a **2M** system and individual components shall be operable as designed. Chart recorders shall be used for all pressure tests.

Test charts, with individual test results identified, shall be maintained on location while drilling and shall be made available to a BLM representative upon request.

If an air compressor is on location and is being utilized to provide air for the drilling medium while drilling, the special drilling requirements in Onshore Oil and Gas Order No. 2, regarding air or gas drilling shall be adhered to. If a mist system is being utilized then the requirement for a deduster shall be waived.

The Vernal Field Office shall be notified, at least 24 hours prior to initiating the pressure tests, in order to have a BLM representative on location during pressure testing.

3. Casing Program and Auxiliary Equipment

Surface casing shall have centralizers on the bottom three joints, with a minimum of one centralizer per joint.

As a minimum, the usable water and oil shale resources shall be isolated and/or protected by having a cement top for the production casing at least 200 ft. above the base of the usable water zone, identified at 1,757 ft. If gilsonite is encountered while drilling, it shall be isolated and/or protected via the cementing program.

The Vernal Field Office shall be notified at least 24 hours prior to the running and cementing of all casing strings, in order to have a BLM representative on location while running and cementing all casing strings.

4. Mud Program and Circulating Medium

Hazardous substances specifically listed by the EPA as a hazardous waste or demonstrating a characteristic of a hazardous waste will not be used in drilling, testing, or completion operations.

No chromate additives will be used in the mud system on Federal and Indian lands without prior BLM approval to ensure adequate protection of fresh water aquifers.

5 .Coring, Logging and Testing Program

Daily drilling and completion progress reports shall be submitted to this office on a weekly basis.

All Drill Stem tests (DST) shall be accomplished during daylight hours, unless specific approval to start during other hours is obtained from the AO. However, DSTs may be allowed to continue at night if the test was initiated during daylight hours and the rate of flow is stabilized and if adequate lighting is available (i.e., lighting which is adequate for visibility and vaporproof for safe operations). Packers can be released, but tripping should not begin before daylight unless prior approval is obtained from the AO.

A cement bond log (CBL) will be run from the production casing shoe to ± 1557 ft. and shall be utilized to determine the bond quality for the production casing. Submit a field copy of the CBL to this office.

Whether the well is completed as a dry hole or as a producer, "Well Completion and Recompletion Report and Log" (Form 3160-4) will be submitted not later than 30 days after completion of the well or after completion of operations being performed, in accordance with 43 CFR 3164. Two copies of all logs, core descriptions, core analyses, well-test data, geologic summaries, sample description, and all other surveys or data obtained and compiled during the drilling, workover, and/or completion operations, will be filed with Form 3160-4. Samples (cuttings, fluids, and/or gases) will be submitted when requested by the AO.

6. Notifications of Operations

No location will be constructed or moved, no well will be plugged, and no drilling or workover equipment will be removed from a well to be placed in a suspended status without prior approval of the AO. If operations are to be suspended, prior approval of the AO will be obtained and notification given before resumption of operations.

The Vernal Field Office shall be notified, during regular work hours (7:45 a.m.-4:30 p.m., Monday through Friday except holidays), at least 24 hours **prior** to spudding the well.

Operator shall report production data to MMS pursuant to 30 CFR 216.5 using form MMS/3160.

Immediate Report: Spills, blowouts, fires, leaks, accidents, or any other unusual occurrences shall be promptly reported in accordance with the requirements of NTL-3A or its revision.

If a replacement rig is contemplated for completion operations, a "Sundry Notice" (Form 3160-5) to that effect will be filed, for prior approval of the AO, and all conditions of this approved plan are applicable during all operations conducted with the replacement rig.

The date on which production is commenced or resumed will be construed for oil wells as the date on which liquid hydrocarbons are first sold or shipped from a temporary storage facility, such as a test tank, and for which a run ticket is required to be generated or, the date on which liquid hydrocarbons are first produced into a permanent storage facility, whichever first occurs; and, for gas wells as the date on which associated liquid hydrocarbons are first sold or shipped from a temporary storage facility, such as a test tank, and for which a run ticket is required to be generated or, the date on which gas is first measured through permanent metering facilities, whichever first occurs.

Should the well be successfully completed for production, the AO will be notified when the well is placed in a producing status. Such notification will be sent by telegram or other written communication, not later than five (5) days following the date on which the well is placed on production.

Gas produced from this well may not be vented or flared beyond an initial authorized test period of 30 days or 50 MMCF following its completion, whichever occurs first, without the prior written approval of the Authorized Officer. Should gas be vented or flared without approval beyond the authorized test period, the operator may be directed to shut-in the well until the gas can be captured or approval to continue venting or flaring as uneconomic is granted and the operator shall be required to compensate the lessor for that portion of the gas vented or flared without approval which is determined to have been avoidably lost.

A schematic facilities diagram as required by 43 CFR 3162.7-2, 3162.7-3, and 3162.7-4 shall be submitted to the appropriate District Office within thirty (30) days of installation or first production, whichever occurs first. All site security regulations as specified in Onshore Oil & Gas Order No. 3 shall be adhered to. All product lines entering and leaving hydrocarbon storage tanks will be effectively sealed in accordance with 43 CFR 3162.7-4.

No well abandonment operations will be commenced without the prior approval of the AO. In the case of newly drilled dry holes or failures, and in emergency situations, oral approval will be obtained from the AO. A "Subsequent Report of Abandonment" Form 3160-5, will be filed with the AO within thirty (30) days following completion of the well for abandonment. This report will indicate where plugs were placed and the current status of surface restoration. Final abandonment will not be approved until the surface reclamation work required by the approved APD or approved abandonment notice has been completed to the satisfaction of the AO or his representative, or the appropriate Surface Managing Agency.

7. Other Information

All loading lines will be placed inside the berm surrounding the tank battery.

All off-lease storage, off-lease measurement, or commingling onlease or off-lease will have prior written approval from the AO.

The oil and gas measurement facilities will be installed on the well location. The oil and gas meters will be calibrated in place prior to any deliveries. Tests for meter accuracy will be conducted on initial meter installations and at least quarterly thereafter. The AO will be provided with a date and time for the initial meter calibration and all future meter proving schedules. A copy of the meter calibration reports will be submitted to the Vernal Field Office. All meter measurement facilities will conform with Onshore Oil & Gas Order No. 4 for liquid hydrocarbons and Onshore Oil & Gas Order No. 5 for natural gas measurement.

The use of materials under BLM jurisdiction will conform to 43 CFR 3610.2-3.

There will be no deviation from the proposed drilling and/or workover program without prior approval from the AO. Safe drilling and operating practices must be observed. All wells, whether drilling, producing, suspended, or abandoned will be identified in accordance with 43 CFR 3162.

"Sundry Notice and Report on Wells" (Form 3160-5) will be filed for approval for all changes of plans and other operations in accordance with 43 CFR 3162.3-2.

Section 102(b)(3) of the Federal Oil and Gas Royalty Management Act of 1982, as implemented by the applicable provisions of the operating regulations at Title 43 CFR 3162.4-1(c), requires that "not later than the 5th business day after any well begins production on which royalty is due anywhere on a lease site or allocated to a lease site, or resumes production in the case of a well which has been off production for more than 90 days, the operator shall notify the authorized officer by letter or sundry notice, Form 3160-5, or orally to be followed by a letter or sundry notice, of the date on which such production has begun or resumed."

If you fail to comply with this requirement in the manner and time allowed, you shall be liable for a civil penalty of up to $10,000 per violation for each day such violation continues, not to exceed a maximum of 20 days. See Section 109(c)(3) of the Federal Oil and Gas Royalty Management Act of 1982 and the implementing regulations at Title 43 CFR 3162.4-1(b)(5)(ii).

APD approval is valid for a period of one (1) year from the signature date. An extension period may be granted, if requested, prior to the expiration of the original approval period.

In the event after-hours approvals are necessary, please contact one of the following individuals:

Ed Forsman (801) 789-7077
Petroleum Engineer

Wayne P. Bankert (801) 789-4170
Petroleum Engineer

Jerry Kenczka (801) 789-1190
Petroleum Engineer

BLM FAX Machine (801) 781-4410

EPA'S LIST OF NONEXEMPT EXPLORATION AND PRODUCTION WASTES

While the following wastes are nonexempt, they are not necessarily hazardous.

Unused fracturing fluids or acids

Gas plant cooling tower cleaning wastes

Painting wastes

Oil and gas service company wastes, such as empty drums, drum rinsate, vacuum truck rinsate, sandblast media, painting wastes, spend solvents, spilled chemicals, and waste acids

Vacuum truck and drum rinsate from trucks and drums, transporting or containing nonexempt waste

Refinery wastes

Liquid and solid wastes generated by crude oil and tank bottom reclaimers

Used equipment lubrication oils

Waste compressor oil, filters, and blowdown

Used hydraulic fluids

Waste solvents

Waste in transportation pipeline-related pits

Caustic or acid cleaners

Boiler cleaning wastes

Boiler refractory bricks

Incinerator ash

Laboratory wastes

Sanitary wastes

Pesticide wastes

Radioactive tracer wastes

Drums, insulation and miscellaneous solids.

SURFACE USE PROGRAM
Conditions of Approval (COAs)

METHODS FOR HANDLING WASTE MATERIALS AND DISPOSAL

The reserve pit shall be lined with a synthetic liner that is a minimum of 12 mil thickness with sufficient bedding to cover any rocks. The liner will overlap the pit walls and be covered with dirt and/or rocks to hold it in place. No trash, scrap pipe, etc., that could puncture the liner will be disposed of in the pit.

Plans For Reclamation Of Location

When reclaiming the reserve pit, the pit liner will be torn and perforated before backfilling the reserve pit and the torn liner will be buried a minimum of four (4) feet deep. If this is a producing well and after the reclamation of the reserve pit, and unused disturbed areas, contact the authorized office to obtain a seed mixture to revegetate these specific areas.

At time of final abandonment the intent of reclamation will be to return the disturbed area to near natural conditions. Recontour the surface of the disturbed area to **blend all cuts, fills, road berms, and borrow ditches to be natural in appearance** with the surrounding terrain. After recontouring of the area any stockpiled topsoil will be spread over the surface, and the area reseeded and revegetated to the satisfaction of the authorized officer of the BLM. Contact the authorized officer of the BLM at the time of reclamation for the required seed mixture.

Other Information

The operator or their contractor shall contact the BLM office at (801)789-1362, 48 hours prior to construction activities.

Raptor Habitat

Due to raptor habitat in the area, if this is a producing well the operator is required to install a multicylinder engine to the pumping unit to limit noise impacts to nesting raptor species.

DIVISION OF OIL, GAS AND MINING

SPUDDING INFORMATION

Name of Company: EQUITABLE RESOURCES

Well Name: MONUMENT FEDERAL 13-4-9-16

Api No. 43-013-31716

Section 4 Township 9S Range 16E County DUCHESNE

Drilling Contractor UNION

Rig # 17

SPUDDED:

Date 1/5/97

Time

How ROTARY

Drilling will commence

Reported by D. INGRAM

Telephone #

Date: 1/15/97 Signed: JLT

Form 3160-5
(June 1990)

UNITED STATES
DEPARTMENT OF THE INTERIOR
BUREAU OF LAND MANAGEMENT

FORM APPROVED
Budget Bureau No. 1004-0135
Expires: March 31, 1993

SUNDRY NOTICES AND REPORTS ON WELLS

Do not use this form for proposals to drill or to deepen or reentry to a different reservoir.
Use "APPLICATION FOR PERMIT—" for such proposals

SUBMIT IN TRIPLICATE

5. Lease Designation and Serial No.: UTU-73086
6. If Indian, Allottee or Tribe Name: n/a
7. If Unit or CA, Agreement Designation: n/a
8. Well Name and No.: Mon. Fed. 13-4-9-16
9. API Well No.: 43-013-31716
10. Field and Pool, or Exploratory Area: Mon. Butte / Green River
11. County or Parish, State: Duchesne Co., Utah

1. Type of Well: [X] Oil Well [ ] Gas Well [ ] Other
2. Name of Operator: Equitable Resources Energy Company
3. Address and Telephone No.: 1601 Lewis Avenue; Billings, MT 59102 (406) 259-7860
4. Location of Well (Footage, Sec., T., R., M., or Survey Description): NW SW Sec. 4 - T9S-16E 2050' FSL 660' FWL

12. CHECK APPROPRIATE BOX(s) TO INDICATE NATURE OF NOTICE, REPORT, OR OTHER DATA

TYPE OF SUBMISSION	TYPE OF ACTION	
[ ] Notice of Intent	[ ] Abandonment	[ ] Change of Plans
[X] Subsequent Report	[ ] Recompletion	[ ] New Construction
[ ] Final Abandonment Notice	[ ] Plugging Back	[ ] Non-Routine Fracturing
	[ ] Casing Repair	[ ] Water Shut-Off
	[ ] Altering Casing	[ ] Conversion to Injection
	[X] Other Spud of well	[ ] Dispose Water (Note: Report results of multiple completion on Well Completion or Recompletion Report and Log form.)

13. Describe Proposed or Completed Operations (Clearly state all pertinent details, and give pertinent dates, including estimated date of starting any proposed work. If well is directionally drilled, give subsurface locations and measured and true vertical depths for all markers and zones pertinent to this work.)*

Spud this well at 2p.m. 1-6-97

RECEIVED
JAN 14 1997
DIV. OF OIL, GAS & MINING

CONFIDENTIAL

ORIGINAL: BLM (Vernal)
Copy: Utah DOGM (w/Entity Action form)

14. I hereby certify that the foregoing is true and correct
Signed: Bobbie Schuman — Title: Regulatory and Environmental Specialist — Date: January 9, 1997

(This space for Federal or State office use)
Approved by _____ Title _____ Date _____
Conditions of approval, if any:

Title 18 U.S.C. Section 1001, makes it a crime for any person knowingly and willfully to make to any department or agency of the United States any false, fictitious or fraudulent statements or representations as to any matter within its jurisdiction.

*See Instruction on Reverse Side

STATE OF UTAH
DIVISION OF OIL, GAS AND MINING

ENTITY ACTION FORM - FORM 6

OPERATOR Equitable Resources Energy Company OPERATOR ACCT. NO. N 9890

ADDRESS 1601 Lewis
Billings Mt 59102

ACTION CODE	CURRENT ENTITY NO.	NEW ENTITY NO.	API NUMBER	WELL NAME	WELL LOCATION QQ	SC	TP	RG	COUNTY	SPUD DATE	EFFECTIVE DATE
A	99999	12054	43-013-31716	Mon Fed. # 13-4-9-16	NW SW	4	9S	16E	Duchesne	1-6-97	1-6-97

WELL 1 COMMENTS: Spud of new well Entity added 1-15-97. fc

WELL 2 COMMENTS:

WELL 3 COMMENTS:

WELL 4 COMMENTS:

WELL 5 COMMENTS:

RECEIVED
JAN 15 1997
DIV OF OIL, GAS & MINING

ACTION CODES (See instructions on back of form)
- A - Establish new entity for new well (single well only)
- B - Add new well to existing entity (group or unit well)
- C - Re-assign well from one existing entity to another existing entity
- D - Re-assign well from one existing entity to a new entity
- E - Other (explain in comments section)

NOTE: Use COMMENT section to explain why each Action Code was selected.

(3/89)

Bobbie Schuman
Signature

Regulatory Spec. 1-9-97
Title Date

Phone No. (406) 259-7860

STATE OF UTAH
DIVISION OF OIL, GAS AND MINING

ENTITY ACTION FORM - FORM 6

OPERATOR Equitable Resources Energy Company

OPERATOR ACCT. NO. N 9890

ADDRESS 1601 Lewis Avenue
Billings, MT 59102
(406) 259-7860

ACTION CODE	CURRENT ENTITY NO.	NEW ENTITY NO.	API NUMBER	WELL NAME	WELL LOCATION QQ	SC	TP	RG	COUNTY	SPUD DATE	EFFECTIVE DATE
A	99999	12054	43-013-31716	Monument Fed. #13-4-9-16	NW SW	4	T9S	16E	Duchesne	1-6-97	
WELL 1 COMMENTS: Spud of a new well. Entities added 2-7-97. Lec Entity previously added 13-4-9-16. Lec (12054)											
A	99999	12065	43-013-31723	Monument Fed. #43-10-9-16	NE SE	10	9S	16E	Duchesne	1-25-97	
WELL 2 COMMENTS: Spud of a new well.											
A	99999	12066	43-013-31720	Monument Fed. #44-6-9-16Y	SE SE	6	9S	16E	Duchesne	12-30-96	12-30-96
WELL 3 COMMENTS: Spud of a new well.											
A	99999	12067	43-013-31715	Monument Fed. #34-31-8-16	SW SE	31	8S	16E	Duchesne	12-7-96	12-7-96
WELL 4 COMMENTS: Spud of a new well.											
WELL 5 COMMENTS:											

ACTION CODES (See instructions on back of form)
- A - Establish new entity for new well (single well only)
- B - Add new well to existing entity (group or unit well)
- C - Re-assign well from one existing entity to another existing entity
- D - Re-assign well from one existing entity to a new entity
- E - Other (explain in comments section)

NOTE: Use COMMENT section to explain why each Action Code was selected.

(3/89)

Molly Conrad
Signature

Operations Tech. 2/7/96.
Title Date

Phone No. ( )

2/2/1
ATD TTO NORTHWEST 09:10AM 96 JAN 31

Form 3160-5
(June 1990)

UNITED STATES
DEPARTMENT OF THE INTERIOR
BUREAU OF LAND MANAGEMENT

FORM APPROVED
Budget Bureau No. 1004-0135
Expires: March 31, 1993

SUNDRY NOTICES AND REPORTS ON WELLS

Do not use this form for proposals to drill or to deepen or reentry to a different reservoir.
Use "APPLICATION FOR PERMIT—" for such proposals

SUBMIT IN TRIPLICATE

5. Lease Designation and Serial No.: UTU-73086

6. If Indian, Allottee or Tribe Name: n/a

7. If Unit or CA, Agreement Designation: n/a

1. Type of Well: [X] Oil Well [ ] Gas Well [ ] Other

8. Well Name and No.: Mon. Fed. #13-4-9-16

2. Name of Operator: Equitable Resources Energy Company

9. API Well No.: 43-013-31716

3. Address and Telephone No.: 1601 Lewis Avenue; Billings, MT 59102 (406) 259-7860

10. Field and Pool, or Exploratory Area: Mon. Butte/Grn River

4. Location of Well (Footage, Sec., T., R., M., or Survey Description): NW SW Section 4, T9S, R16E
2050' FSL, 660' FWL

CONFIDENTIAL

11. County or Parish, State: Duchesne County, UTAH

12. CHECK APPROPRIATE BOX(s) TO INDICATE NATURE OF NOTICE, REPORT, OR OTHER DATA

TYPE OF SUBMISSION	TYPE OF ACTION	
[ ] Notice of Intent	[ ] Abandonment	[ ] Change of Plans
[X] Subsequent Report	[ ] Recompletion	[ ] New Construction
[ ] Final Abandonment Notice	[ ] Plugging Back	[ ] Non-Routine Fracturing
	[ ] Casing Repair	[ ] Water Shut-Off
	[ ] Altering Casing	[ ] Conversion to Injection
	[X] Other 1st production	[ ] Dispose Water (Note: Report results of multiple completion on Well Completion or Recompletion Report and Log form.)

13. Describe Proposed or Completed Operations (Clearly state all pertinent details, and give pertinent dates, including estimated date of starting any proposed work. If well is directionally drilled, give subsurface locations and measured and true vertical depths for all markers and zones pertinent to this work.)*

First production on this well was: February 4, 1997

ORIGINAL: Bureau of Land Management (Vernal, UT)
COPY: Utah Division of Oil, Gas and Mining

RECEIVED
FEB 10 1997
DIV. OF OIL, GAS & MINING

14. I hereby certify that the foregoing is true and correct

Signed: Bobbie Schuman — Title: Regulatory and Environmental Specialist — Date: February 5, 1997

Bobbie Schuman

(This space for Federal or State office use)

Approved by _____ Title _____ Date _____

Conditions of approval, if any:

Title 18 U.S.C. Section 1001, makes it a crime for any person knowingly and willfully to make to any department or agency of the United States any false, fictitious or fraudulent statements or representations as to any matter within its jurisdiction.

*See Instruction on Reverse Side

(faxed copy)

Rec'd 8-27-97

Form 3160-4 (November 1983) (formerly 9-330)

UNITED STATES
DEPARTMENT OF THE INTERIOR
BUREAU OF LAND MANAGEMENT

SUBMIT IN DUPLICATE* (See other instructions on reverse side)

Form approved. Budget Bureau No. 1004-0137 Expires August 31, 1985

WELL COMPLETION OR RECOMPLETION REPORT AND LOG*

1a. TYPE OF WELL: OIL WELL [X] GAS WELL [ ] DRY [ ] Other

b. TYPE OF COMPLETION: NEW WELL [X] WORK OVER [ ] DEEP-EN [ ] PLUG BACK [ ] DIFF. RESVR. [ ] Other CONFIDENTIAL

2. NAME OF OPERATOR: EQUITABLE RESOURCES ENERGY COMPANY

3. ADDRESS OF OPERATOR: 1601 LEWIS AVENUE BILLINGS, MT 59102 (406)259-7860

4. LOCATION OF WELL (Report location clearly and in accordance with any State requirements)*
At surface: 2050' FSL & 660' ~~FNL~~ FWL
At top prod. interval reported below
At total depth

CONFIDENTIAL

5. LEASE DESIGNATION AND SERIAL NO.: UTU-73086
6. IF INDIAN, ALLOTTEE OR TRIBE NAME: n/a
7. UNIT AGREEMENT NAME: n/a
8. FARM OR LEASE NAME: MONUMENT FEDERAL
9. WELL NO.: #13-4-9-16
10. FIELD AND POOL, OR WILDCAT: Monument Butte/Green River
11. SEC., T., R., M., OR BLOCK AND SURVEY OR AREA: NW SW Section 4, T9S, R16E

14. PERMIT NO.	DATE ISSUED	12. COUNTY OR PARISH	13. STATE
43-013-31716	11-25-96	Duchesne	Utah

15. DATE SPUDDED	16. DATE T.D. REACHED	17. DATE COMPL. (Ready to prod.)	18. ELEVATIONS (DF, RKB, RT, GR, ETC.)*	19. ELEV. CASINGHEAD
1-6-97	1-14-97	2-4-97	5761.2'GL	n/a

20. TOTAL DEPTH, MD & TVD	21. PLUG, BACK T.D., MD & TVD	22. IF MULTIPLE COMPL., HOW MANY*	23. INTERVALS DRILLED BY	ROTARY TOOLS	CABLE TOOLS
6000'	5924'	n/a	→	SFC-TD	n/a

24. PRODUCING INTERVAL(S), OF THIS COMPLETION—TOP, BOTTOM, NAME (MD AND TVD)*
5281'-5345' GREEN RIVER

25. WAS DIRECTIONAL SURVEY MADE: NO

26. TYPE ELECTRIC AND OTHER LOGS RUN
DLL/GR LDT/CNL GR/CBL MUD 2-20-97

27. WAS WELL CORED: NO

28. CASING RECORD (Report all strings set in well)

CASING SIZE	WEIGHT, LB./FT.	DEPTH SET (MD)	HOLE SIZE	CEMENTING RECORD	AMOUNT PULLED
8-5/8"	24#	263.30'KB	12-1/4"	160sxs"G" w/additives	NONE
5-1/2"	15.5#	5924.75'KB	7-7/8"	275sxs Pream LIte Plus w/ additives.	NONE

29. LINER RECORD

SIZE	TOP (MD)	BOTTOM (MD)	SACKS CEMENT*	SCREEN (MD)
n/a				

30. TUBING RECORD

SIZE	DEPTH SET (MD)	PACKER SET (MD)
2-7/8"	5218.28'KB	n/a

31. PERFORATION RECORD (Interval, size and number)
5281'-86' (4 SPF)
5308'-17' (4 SPF)
5328'-45' (4 SPF)

CONFIDENTIAL

32. ACID, SHOT, FRACTURE, CEMENT SQUEEZE, ETC.

DEPTH INTERVAL (MD)	AMOUNT AND KIND OF MATERIAL USED
(SEE ATTACHMENT	FOR DETAILS)

33.* PRODUCTION

DATE FIRST PRODUCTION	PRODUCTION METHOD (Flowing, gas lift, pumping—size and type of pump)	WELL STATUS (Producing or shut-in)
2-4-97	1-1/2" Insert Pump	PRODUCING

DATE OF TEST	HOURS TESTED	CHOKE SIZE	PROD'N. FOR TEST PERIOD	OIL—BBL.	GAS—MCF.	WATER—BBL.	GAS-OIL RATIO
2-14-97	24	n/a	→	64.6	116	0	1.8 MCF/BBL

FLOW. TUBING PRESS.	CASING PRESSURE	CALCULATED 24-HOUR RATE	OIL—BBL.	GAS—MCF.	WATER—BBL.	OIL GRAVITY-API (CORR.)
n/a	n/a	→	64.6	116	0	34

34. DISPOSITION OF GAS (Sold, used for fuel, vented, etc.)
USED FOR FUEL.

TEST WITNESSED BY: DALE GRIFFIN

35. LIST OF ATTACHMENTS
#32.

36. I hereby certify that the foregoing and attached information is complete and correct as determined from all available records

SIGNED Debbie Schuman TITLE ~~Operations Secretary~~ Regulatory Specialist DATE 3-19-97

*(See Instructions and Spaces for Additional Data on Reverse Side)

Title 18 U.S.C. Section 1001 ...

ATTACHMENT TO COMPLETION REPORT
MONUMENT FEDERAL #13-4-9-16
NW SW SECTION 4, T9S, R16E
DUCHESNE COUNTY, UTAH

DEPTH INTERVAL	AMOUNT AND KIND OF MATERIAL USED
5281'-86'	Breakdown with 2,352 gallons 2% KCL water. Fracture with 27,678 gallons 2% KCL gelled water, 27,000# 20/40 mesh sand and 66,900# 16/30 mesh sand.
5308'-17'	Breakdown with 3,990 gallons 2% KCL water. Fracture with 27,678 gallons 2% KCL gelled water, 27,000# 20/40 mesh sand and 66,900# 16/30 mesh sand
5328'-45'	Breakdown with 3,990 gallons 2% KCL water. Fracture with 27,678 gallons 2% KCL gelled water, 27,000# 20/40 mesh sand and 66,900# 16/30 mesh sand

37. SUMMARY OF POROUS ZONES: (Show all important zones of porosity and contents thereof; cored intervals; and all drill-stem, tests, including depth interval tested, cushion used, time tool open, flowing and shut-in pressures, and recoveries):

FORMATION	TOP	BOTTOM	DESCRIPTION, CONTENTS, ETC.
			NO DST's run./

38. GEOLOGIC MARKERS

NAME	TOP MEAS. DEPTH	TOP TRUE VERT. DEPTH
Green River	1728'	1728'
Horse Bench S.S.	2345'	2345'
2nd Garden Gulch	4051'	4051'
Yellow Marker	4686'	4686'
Douglas Creek	4838'	4838'
2nd Douglas Crk.	5077'	5077'
Green Marker	5213'	5213'
Carbonate Marker	5730'	5730'

Form 3160-5
(June 1990)

UNITED STATES
DEPARTMENT OF THE INTERIOR
BUREAU OF LAND MANAGEMENT

FORM APPROVED
Budget Bureau No. 1004-0135
Expires: March 31, 1993

SUNDRY NOTICES AND REPORTS ON WELLS

Do not use this form for proposals to drill or to deepen or reentry to a different reservoir.
Use "APPLICATION FOR PERMIT—" for such proposals

SUBMIT IN TRIPLICATE

5. Lease Designation and Serial No.: UTU-73086
6. If Indian, Allottee or Tribe Name: n/a
7. If Unit or CA, Agreement Designation: n/a
8. Well Name and No.: Mon.Fed. #13-4-9-16
9. API Well No.: #43-013-31716
10. Field and Pool, or Exploratory Area: Mon. Butte/Green River
11. County or Parish, State: Duchesne County, Utah

1. Type of Well: [X] Oil Well [ ] Gas Well [ ] Other
2. Name of Operator: EQUITABLE RESOURCES ENERGY COMPANY
3. Address and Telephone No.: 1601 LEWIS AVENUE BILLINGS, MT 59102 (406)259-7860
4. Location of Well (Footage, Sec., T., R., M., or Survey Description): NW SW Section 4, T9S, R16E
2050' FSL & 660' FNL

12. CHECK APPROPRIATE BOX(s) TO INDICATE NATURE OF NOTICE, REPORT, OR OTHER DATA

TYPE OF SUBMISSION	TYPE OF ACTION	
[X] Notice of Intent	[ ] Abandonment	[ ] Change of Plans
[ ] Subsequent Report	[ ] Recompletion	[ ] New Construction
[ ] Final Abandonment Notice	[ ] Plugging Back	[ ] Non-Routine Fracturing
	[ ] Casing Repair	[ ] Water Shut-Off
	[ ] Altering Casing	[ ] Conversion to Injection
	[X] Other Site Security Diagram	[ ] Dispose Water (Note: Report results of multiple completion on Well Completion or Recompletion Report and Log form.)

13. Describe Proposed or Completed Operations (Clearly state all pertinent details, and give pertinent dates, including estimated date of starting any proposed work. If well is directionally drilled, give subsurface locations and measured and true vertical depths for all markers and zones pertinent to this work.)*

ATTACHED IS A SITE SECURITY DIAGRAM FOR THIS WELL.

14. I hereby certify that the foregoing is true and correct
Signed: Bobbie Schuman Title: REGULATORY SPECIALIST Date: 3-25-97

(This space for Federal or State office use)

Approved by _____ Title _____ Date _____
Conditions of approval, if any:

Title 18 U.S.C. Section 1001, makes it a crime for any person knowingly and willfully to make to any department or agency of the United States any false, fictitious or fraudulent statements or representations as to any matter within its jurisdiction.

*See Instruction on Reverse Side

Form 3160-5
(June 1990)

UNITED STATES
DEPARTMENT OF THE INTERIOR
BUREAU OF LAND MANAGEMENT

FORM APPROVED
Budget Bureau No. 1004-0135
Expires: March 31, 1993

5. Lease Designation and Serial No.
UTU-73086

6. If Indian, Allottee or Tribe Name
n/a

7. If Unit or CA, Agreement Designation
n/a

SUNDRY NOTICES AND REPORTS ON WELLS

Do not use this form for proposals to drill or to deepen or reentry to a different reservoir.
Use "APPLICATION FOR PERMIT—" for such proposals

SUBMIT IN TRIPLICATE

1. Type of Well
[X] Oil Well [ ] Gas Well [ ] Other

8. Well Name and No.
Mon. Fed. #13-4-9-16

2. Name of Operator
EQUITABLE RESOURCES ENERGY COMPANY

9. API Well No.
#43-013-31716

3. Address and Telephone No.
1601 LEWIS AVENUE BILLINGS, MT 59102 (406)259-7860

10. Field and Pool, or Exploratory Area
Mon. Butte/Green River

4. Location of Well (Footage, Sec., T., R., M., or Survey Description)
NW SW Section 4, T9S, R16E
2050' FSL & 660' FNL

11. County or Parish, State
Duchesne County, Utah

12. CHECK APPROPRIATE BOX(s) TO INDICATE NATURE OF NOTICE, REPORT, OR OTHER DATA

TYPE OF SUBMISSION	TYPE OF ACTION	
[X] Notice of Intent	[ ] Abandonment	[ ] Change of Plans
[X] Subsequent Report	[ ] Recompletion	[ ] New Construction
[ ] Final Abandonment Notice	[ ] Plugging Back	[ ] Non-Routine Fracturing
	[ ] Casing Repair	[ ] Water Shut-Off
	[ ] Altering Casing	[ ] Conversion to Injection
	[X] Other Onshore Order #7	[ ] Dispose Water (Note: Report results of multiple completion on Well Completion or Recompletion Report and Log form.)

13. Describe Proposed or Completed Operations (Clearly state all pertinent details, and give pertinent dates, including estimated date of starting any proposed work. If well is directionally drilled, give subsurface locations and measured and true vertical depths for all markers and zones pertinent to this work.)*

Any water produced by this well will be held in a produced water tank and trucked to a commercial disposal facility. The primary facility to be used is the R.N. Industries produced water disposal facility located in Section 9, T2S, R2W in Duchesne County, Utah. A copy of the State-issued permit for that facility is on file at the Vernal Bureau of Land Management. If for some reason the operator is unable to use this primary disposal facility, the produced water will be trucked to another State-approved disposal facility. If applicable, Operator has received approved Right-of-Way access to this well location for the Vernal Bureau of Land Management.

14. I hereby certify that the foregoing is true and correct
Signed Debbie Schuman Title Regulatory Specialist Date 3-25-97

(This space for Federal or State office use)

Approved by _____ Title _____ Date _____
Conditions of approval, if any:

Title 18 U.S.C. Section 1001, makes it a crime for any person knowingly and willfully to make to any department or agency of the United States any false, fictitious or fraudulent statements or representations as to any matter within its jurisdiction.

*See Instruction on Reverse Side

EQUITABLE RESOURCES ENERGY COMPANY
Monument Federal 13-4-9-16
PRODUCTION FACILITY DIAGRAM

Monument Federal 13-4-9-16
NW SW SEC 4, T9S R16E
DUCHESNE COUNTY, UTAH
FEDERAL LEASE #UTU-73086

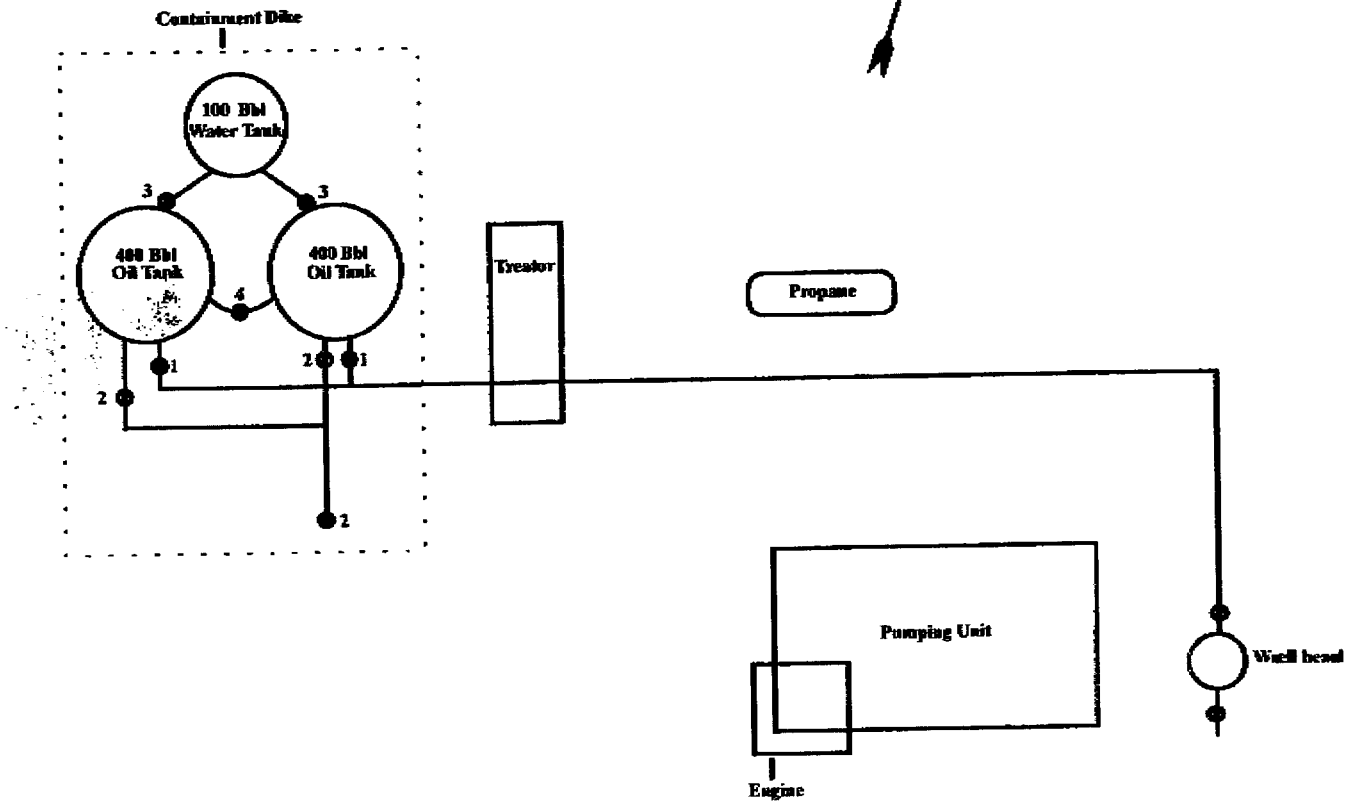

Valve Description			
	During Prod.	During Sale	During Water Drain
Valve #1	Open	Closed	Closed
Valve #2	Closed	Open	Closed
Valve #3	Closed	Closed	Open
Valve #4	Open	Closed	Closed

Diagram Not To Scale

PLAN LOCATED AT:
EQUITABLE RESOURCES ENERGY COMPANY
Western Region
1600 Lincoln Avenue
Billings, MT 59102
(406) 259-7860

March 19, 1997

EREC, Western Region
DAILY OPERATING REPORT

MONUMENT FEDERAL #13-4-9-16
Location: NW SW Section 4, T9S, R16E
Duchesne County, Utah **---TIGHT HOLE---**
2050' FSL, 660' FNL
PTD: 6000' Formation: Green River
Prospect: Monument Butte
API #
Elevations: 5761.2' GL
Contractor: Union Drilling
Operator: EREC/Western Region
Spud: 2:00 PM, 1/6/97
Casing:

Tubing:

01/07/97 TD: 282' (282') Day 1
Present Operation: Wait On Cement
Wait on day light. MIRU. Drill rat hole & conductor hole, set same. Drill 12-1/4" hole to 282' and ran 8-5/8", J-55, 24# csg as follows:

Shoe	.90'
Shoe Joint	42.10'
Baffle Plate	0.00'
5 Joints Casing	210.30'
Total Casing Length	253.30'
Landing Joint	10.00'
Depth Landed	263.30' KB

Cemented 8-5/8" csg w/160 sxs "G" + 2% $CaCl_2$ + ¼#/sx Cello Flake. Wait on cement. Spud well @ 2:00 PM, 1-6-97. Plug down @ 2:40 AM, 1-7-97. 4 bbls cement returned to pit.
DC: $5,076 CC: $5,076

01/08/97 TD: 897' (615') Day 2
Present Operation: Drilling 7-7/8" hole
WOC. NU, drill cement & plug. Drill 615' of 7-7/8" hole. Ran one survey @ 600' - 1/2°.
DC: $11,070 CC: $16,146

01/09/97 TD: 2260' (1363') Day 3
Formation: Sand & Shale
Present Operation: Drilling 7-7/8" hole
Drill 1363' of 7-7/8" hole, service rig and ran 3 surveys: 1100' - 1/2°, 1630' - 1/2°, & 2150' - 3/4°.
DC: $24,534 CC: $40,680

01/10/97 TD: 3503' (1243') Day 4
Formation: Sand & Shale
Present Operation: Drilling 7-7/8" hole

Drilled 1243' of 7-7/8" hole, service rig, ran 2 surveys: 2650' - 1-1/4° and 3150' - 1-1/2°.
DC: $22,374 CC: $63,054

01/11/97 TD: 4260' (757') Day 5
Present Operation: Drilling 7-7/8" hole
Drill 7-7/8" hole from 3503' to 4131' on air and foam. Displaced hole w/fluid and circulated. TOOH w/bit #3. PU motor & bit #4, TIH. Reamed back to btm, drilled 7-7/8" hole w/fluid from 4131' to 4260'.
DC: $13,626 CC: $76,680

01/12/97 TD: 5155' (895') Day 6
Present Operation: Drilling 7-7/8" hole
Drilled 7-7/8" hole from 4260' to 5155' w/KCL wtr, serviced rig, ran survey @ 4900' - 1-3/4°.
DC: $16,110 CC: $92,790

01/13/97 TD: 5454' (299') Day 7
Present Operation: Thaw Kelly
Serviced rig, drilled 7-7/8" hole from 5155' to 5454' w/KCL fluid. Motor pressured up @ 5454' - TOOH, PU motor #2, TIH. Presently thawing kelly to circulate and drill 7-7/8" hole.
DC: $5,382 CC: $98,172

01/14/97 TD: 6000' (546') Day 8
Present Operation: Lay Down Motor
Drilled 546' of 7-7/8" hole from 5454' to 6000' w/KCL wtr. Repaired circulation pump, circulated hole @ TD. Lay down drill pipe and collars. Presently laying down motor. Ran one survey @ 5400' - 1-1/2°.
DC: $9,828 CC: $108,000

01/15/97 TD: 6000' (0') Day 9
Present Operation: Shut Down
Log well, circulate hole. Run 5-1/2", J-55, 15.5# csg as follows:

Shoe	.90'
Shoe Joint	42.58'
Float Collar	1.10'
140 jts csg	5914.75'
Total csg length	5959.33'
Landing jt	10.00'
Depth landed	5969.33'
PBTD	5924.75' KB

Cement csg w/lead = 275 sxs Pream Lite Plus + 10% gel + 6#/sx BA-91 + 2#/sx Kolseal + ¼#/sx Cello Flake .5% sodmet. Tail = 500 sxs 50/50 poz + ¼#/sx Cello Flake + 2#/sx Kolseal. Shut down. Wait on daylight to move. Plug down @ 5:00 PM. Release rig @ 9:00 PM.

01/21/97 Completion
RU BJ Services & frac 5281' - 5345' w/27,678 gasl 2% KCL gelled wtr, 27,000 lbs 20/40 mesh sand & 66,900 lbs 16/30 mesh sand. ATP = 2000 psi, ATR = 30.8 bpm,

ISIP = 1920 psi, 5 min = 1940 psi, 10 min = 1810 psi, 15 min = 1640 psi, 30 min = 1500 psi. Used 659 bbls wtr. Start forced closure flow back, .75 bpm. Flow back 214 bbls wtr. TIH w/retrieving tool, 2-3/8" x 4' sub, HD pkr, SN & 169 jts tbg. Tag sand @ 5252' KB. Circulate down to BP @ 5418' KB. Set pkr @ 5221' KB. Made 9 swab runs. Recovered 47 bbls wtr w/trace of sand, gas cut. Final fluid level @ 1500'. SWIFD.
DC: $38,071 CC: $160,473

01/22/97 Completion
Fluid level @ surface. Made 28 swab runs, recovered 31 bbls oil & 107 bbls wtr, good gas & trace sand. Oil 50% last 3 runs, no sand last 7 runs. Fluid level @ 2300' last 4 runs. Release pkr, tag sand @ 5409' KB. Circulate down to BP @ 5418' KB. Release BP. TOOH w/tbg, pkr & BP. TIH w/tbg string as follows:

	LENGTH	DEPTH KB
1 - Notched-pinned collar 2-7/8"	.40'	5411.61'
1 - jt 2-7/8" EUE J-55 8rd 6.5#	29.58'	5411.21'
1 - perf sub 2-7/8" x 4'	4.20'	5381.63'
1 - SN 2-7/8"	1.10'	5377.43'
5 - jts 2-7/8" EUE J-55 8rd 6.5#	155.30'	5376.33'
1 - tbg anchor 2-7/8" x 501/2 (TRICO)	2.75'	5221.03'
168 - jts 2-7/8" EUE J-55 8rd 6.5#	5208.28'	5218.28'
KB	10.00'	

SWIFD.
DC: $2,054 CC: $162,527

01/23/97 Completion
Set tbg anchor w/12" tension. ND BOP. ND 5-M well head, NU 3-M well head. TIH w/rod string as follows:

1 - DHP, 2-1/2" x 1-1/2" x 16' RHAC w/SM plunger (TRICO #1217)
1 - Pony 7/8" x 2' w/2-1/2" guide
1 - K-bar 1-1/2" x 25'
1 - Pony 7/8" x 2' w/2-1/2" guide
212 - ¾" x 25' D-61 Plain
1 - ¾" x 8' Pony
1 - ¾" x 6' Pony
1 - Polish Rod 1-1/4" x 22' SM

Pressure test DHP & tbg to 1000 psi, OK. SWI. RDMO.
DC: $15,006 CC: $177,533

02/04/97 Completion
Start well pumping. 5-1/4 SPM, 99" stroke.
DC: $29,589 CC: $207,122

Equitable Resources
Energy Company,
WESTERN REGION

1601 Lewis Avenue, Billings, MT 59102

FAX

Date: 8-26-97

No. of pages including cover sheet: 10

To: Kristin

Phone:

Fax::

CC:

From: Molly.

Phone: (406) 259-7860, Ext.

Fax (406) 245-~~1865~~ 1361

REMARKS: ☐ Urgent ☐ For your review ☐ Reply ASAP ☐ Please comment

Missing completion report you requested.

The information contained in this facsimile message is privileged and confidential and is intended only for the use of the individual(s) or entity name above who has been specifically authorized to receive it. If the reader is not the intended recipient, you are hereby notified that any dissemination, distribution or copying of this communication is strictly prohibited. If you have received this communication in error, please notify us immediately by telephone and return all pages to the address shown above. Thank you.

RECEIVED
OCT 10 1997

Inland
RESOURCES INC.

October 7, 1997

OCT

Bureau of Land Management
Vernal District Office
170 South 500 East
Vernal, UT 84078

RE: Change of Operator
Duchesne & Vernal Counties, Utah

Dear Mr. Forsman:

Please find attached Sundry Notices and Reports on Wells for Change of Operator, previously operated by Equitable Resources Energy Company for approval.

If you should have questions regarding this matter, please do not hesitate to contact me at the number listed below.

Sincerely,

INLAND PRODUCTION COMPANY

Patsy Barreau

Patsy Barreau

/pb
encls.

RECEIVED
OCT 20 1997
DIV. OF OIL, GAS & MINING

475 Seventeenth Street, Suite 1500, Denver, CO 80202 • 303-292-0900 • FAX 303-296-4070

FORM 9

STATE OF UTAH

DIVISION OF OIL, GAS AND MINING

SUNDRY NOTICES AND REPORTS ON WELLS

Do not use this form for proposals to drill new wells, deepen existing wells, or to reenter plugged and abandoned wells. Use APPLICATION FOR PERMIT TO DRILL OR DEEPEN form for such proposals.

5. Lease Designation and Serial Number: See Attached

6. If Indian, Allottee or Tribe Name: n/a

7. Unit Agreement Name: See Attached

8. Well Name and Number: See Attached

9. API Well Number: See Attached

10. Field and Pool, or Wildcat: See Attached

1. Type of Well: OIL [X] GAS [ ] OTHER:

RECEIVED OCT 13 1997

2. Name of Operator: Inland Production Company

3. Address and Telephone Number: 475 - 17th Street, Suite 1500, Denver, CO 80202

4. Location of Well

Footages: See Attached Exhibit

County:

QQ, Sec., T., R., M.:

State:

11. CHECK APPROPRIATE BOXES TO INDICATE NATURE OF NOTICE, REPORT, OR OTHER DATA

NOTICE OF INTENT (Submit in Duplicate)

- [ ] Abandon
- [ ] New Construction
- [ ] Repair Casing
- [ ] Pull or Alter Casing
- [ ] Change of Plans
- [ ] Recomplete
- [ ] Convert to Injection
- [ ] Reperforate
- [ ] Fracture Treat or Acidize
- [ ] Vent or Flare
- [ ] Multiple Completion
- [ ] Water Shut-Off
- [X] Other Change of Operator

Approximate date work will start _____

SUBSEQUENT REPORT (Submit Original Form Only)

- [ ] Abandon *
- [ ] New Construction
- [ ] Repair Casing
- [ ] Pull or Alter Casing
- [ ] Change of Plans
- [ ] Reperforate
- [ ] Convert to Injection
- [ ] Vent or Flare
- [ ] Fracture Treat or Acidize
- [ ] Water Shut-Off
- [X] Other Change of Operator

Date of work completion 9-30-97

Report results of Multiple Completions and Recompletions to different reservoirs on WELL COMPLETION OR RECOMPLETION REPORT AND LOG form.

* Must be accompanied by a cement verification report.

12. DESCRIBE PROPOSED OR COMPLETED OPERATIONS (Clearly state all pertinent details, and give pertinent dates. If well is directionally drilled, give subsurface locations and measured and true vertical depths for all markers and zones pertinent to this work.)

Effective September 30, 1997, Inland Production Company will take over operations of the wells on the attached list. The previous operator was :

Equitable Resources Energy Company
1601 Lewis Avenue
Billings, MT 59102

Effective September 30, 1997, Inland Production Company is responsible under the terms and conditions of the leases for operations conducted on the leased lands or a portion thereof under State of Utah Statewide Bond No. 4471291.

DIV. OF OIL, GAS & MINING OCT 16 1997

13. Name & Signature: Chris A. Potter Title: CHRIS A. POTTER, ATTORNEY-IN-FACT Date: 9/30/97

(This space for State use only)

(See Instructions on Reverse Side)

Inland Resources Change of Operator

WELL NAME	LOCATION	COUNTY	ST	FIELD NAME	API NUMBER	LEASE NO.	AGEEMENT
WALTON FEDERAL #1	SESE 119S 16E	DUCHESNE	UT	MONUMENT BUTTE (J)	43-013-15792-00	UTU096550	UTU72086A
WALTON FEDERAL #2	NWNE 149S 16E	DUCHESNE	UT	MONUMENT BUTTE (J)	43-013-15793-00	UTU096550	UTU72086A
WALTON FEDERAL #34-11	SWSE 119S 16E	DUCHESNE	UT	MONUMENT BUTTE (J)	43-013-31003-00	UTU096550	UTU72086A
WALTON FEDERAL #4	SENW 119S 16E	DUCHESNE	UT	MONUMENT BUTTE (J)	43-013-15795-00	UTU096550	UTU72086A
ALLEN FEDERAL #31-6G	NWNE 6 9S 17E	DUCHESNE	UT	MONUMENT BUTTE (U)	43-013-31442-00	UTU020252A	
BALCRON FEDERAL #21-13Y	NENW 139S 16E	DUCHESNE	UT	MONUMENT BUTTE (U)	43-013-31400-00	UTU64805	
BALCRON FEDERAL #21-25Y	NENW 259S 16E	DUCHESNE	UT	MONUMENT BUTTE (U)	43-013-31394-00	UTU64380	
BALCRON FEDERAL #44-14Y	SESE 149S 17E	UINTAH	UT	MONUMENT BUTTE (U)	43-047-32438-00	UTU64806	
CASTLE PEAK FEDERAL #24-10A	SESW 169S 16E	DUCHESNE	UT	MONUMENT BUTTE (U)	43-013-30555-00	UTU72107	
CASTLE PEAK STATE #43-16	NESE 169S 16E	DUCHESNE	UT	MONUMENT BUTTE (U)	43-013-30594-00		891008243C
K. JORGENSON STATE #16-4	NESE 169S 17E	DUCHESNE	UT	MONUMENT BUTTE (U)	43-013-30572-00	ML-3453-B	
STATE #16-2	NENE 169S 17E	DUCHESNE	UT	MONUMENT BUTTE (U)	43-013-30552-00	ML-3453-B	
BALCRON FEDERAL #21-9Y	NENW 9 9S 16E	DUCHESNE	UT	MONUMENT BUTTE (W)	43-013-31396-00	UTU65207	
BALCRON FEDERAL #41-21Y	NENE 219S 16E	DUCHESNE	UT	MONUMENT BUTTE (W)	43-013-31392-00	UTU64379	
MONUMENT FEDERAL #31-6-9-16	NWNE 6 9S 16E	DUCHESNE	UT	MONUMENT BUTTE (W)	43-013-31717-00	UTU74390	
MONUMENT FEDERAL #32-6-9-16Y	SW NE 6 9S 16E	DUCHESNE	UT	MONUMENT BUTTE (W)	43-013-31300-00	UTU74390	
MONUMENT FEDERAL #42-6-9-16Y	SE NW 6 9S 15E	DUCHESNE	UT	MONUMENT BUTTE (W)	43-013-31645-00	UTU74390	
MONUMENT FEDERAL #41-6-9-16	NENE 6 9S 16E	DUCHESNE	UT	MONUMENT BUTTE (W)	43-013-31718-00	UTU74390	
MONUMENT FEDERAL #31-8-9-16	NW NE 8 9S 16E	DUCHESNE	UT	MONUMENT BUTTE (W)	43-013-31721-00	UTU020255	
MONUMENT FEDERAL #41-8-9-16	NENE 8 9S 16E	DUCHESNE	UT	MONUMENT BUTTE (W)	43-013-31619-00	UTU020255	
MONUMENT FEDERAL #11-9-9-16	NW NW 9 9S 16E	DUCHESNE	UT	MONUMENT BUTTE (W)	43-013-31618-00	UTU020254	
MONUMENT FEDERAL #33-6-9-16Y	NW SE 6 9S 16E	DUCHESNE	UT	MONUMENT BUTTE (W)	43-013-31589-00	UTU74390	
MONUMENT FEDERAL #43-6-9-16Y	NE SE 6 9S 16E	DUCHESNE	UT	MONUMENT BUTTE (W)	43-013-31644-00	UTU74390	
MONUMENT FEDERAL #44-6-9-16Y	SE SE 6 9S 15E	DUCHESNE	UT	MONUMENT BUTTE (W)	43-013-31720-00	UTU74390	
MONUMENT FEDERAL #31-18-9-16	NW NE 189S 16E	DUCHESNE	UT	MONUMENT BUTTE (W)	43-013-31725-00	UTU74390	
MONUMENT FEDERAL #41-18Y	NE NE 189S 16E	DUCHESNE	UT	MONUMENT BUTTE (W)	43-013-31646-00	UTU74390	
MONUMENT FEDERAL #42-18Y	SE NE 189S 16E	DUCHESNE	UT	MONUMENT BUTTE (W)	43-013-31724-00	UTU74390	
MONUMENT FEDERAL #31-21-9-16	NW NE 219S 16E	DUCHESNE	UT	MONUMENT BUTTE (W)	43-013-31726-00	UTU64379	
MONUMENT FEDERAL #11-22Y	NW NW 229S 16E	DUCHESNE	UT	MONUMENT BUTTE (W)	43-013-31647-00	UTU64379	
MONUMENT FEDERAL #13-4-9-16	NW SW 4 9S 16E	DUCHESNE	UT	MONUMENT BUTTE (W)	43-013-31716-00	UTU73086	
MONUMENT FEDERAL #14-4	SWSW 4 9S 16E	DUCHESNE	UT	MONUMENT BUTTE (W)	43-013-31666-00	UTU73086	
MONUMENT FEDERAL #22-20-9-16	SE NW 209S 16E	DUCHESNE	UT	MONUMENT BUTTE (W)	43-013-31681-00	UTU52018	
MONUMENT FEDERAL #23-7-9-16	NESW 7 9S 16E	DUCHESNE	UT	MONUMENT BUTTE (W)	43-013-31694-00	UTU74390	
MONUMENT FEDERAL #24-17-9-16	SESW 179S 16E	DUCHESNE	UT	MONUMENT BUTTE (W)	43-013-31682-00	UTU52018	
MONUMENT BUTTE #34-31-8-16	SW SE 318S 16E	DUCHESNE	UT	MONUMENT BUTTE (W)	43-013-31715-00	UTU74389	
MONUMENT FEDERAL #33-10-9-16	NW SE 109S 16E	DUCHESNE	UT	MONUMENT BUTTE (W)	43-013-31722-00	UTU72107	
MONUMENT BUTTE #43-10-9-16	NE SE 109S 16E	DUCHESNE	UT	MONUMENT BUTTE (W)	43-013-31723-00	UTU72107	
CHORNEY FEDERAL #1-9	SWSE 9 9S 19E	UINTA	UT	PARIETTE BENCH	43-047-30070-00	UTU5843	
HENDEL FEDERAL #1	SWSW 9 9S 19E	UINTA	UT	PARIETTE BENCH	43-047-20011-00	UTU058149	

United States Department of the Interior

BUREAU OF LAND MANAGEMENT
Vernal District Office
170 South 500 East
Vernal, Utah 84078-2799

Phone: (801) 781-4400
Fax: (801) 781-4410

IN REPLY REFER TO:
3162.3
UT08438

December 4, 1997

Inland Production Company
475 17th Street, Suite 1500
Denver, CO 80202

43-013-31716

Re: Well No. Monument Fed. 13-4-9-16
NWSW, Sec. 4, T9S, R16E
Lease U-73086
Duchesne County, Utah

Dear Sir:

This correspondence is in regard to the self-certification statement submitted requesting a change in operator for the referenced well. After a review by this office, the change in operator request is approved. Effective immediately, Inland Production Company is responsible for all operations performed on the referenced well. All liability will now fall under your bond, BLM Bond No. UT0056, for all operations conducted on the referenced well on the leased land.

If you have any other questions concerning this matter, please contact Margie Herrmann or Pat Sutton of this office at (435) 781-4400.

Sincerely,

Howard B. Cleavinger II
Assistant Field Manager,
Minerals Resources

cc: Division of Oil, Gas & Mining
Equitable Resources Energy Company

EQUITABLE RESOURCES
ENERGY COMPANY
WESTERN REGION
(406) 259-7860 Telephone
(406) 245-1361 Fax

December 10, 1997

Lisha
State of Utah
Division of Oil, Gas and Mining
1594 West North Temple, Suite 1210
Box 145801
Salt Lake City, UT 84114-5801

Dear Lisha:

RE: Equitable Sale of Utah Properties

Effective September 30, 1997, Equitable Resources Energy Company sold all of its Utah properties to Inland Production Company.

Please feel free to contact me if you require additional information.

Sincerely,

Molly Conrad

Molly Conrad
Agent for Equitable Resources
Energy Company

/mc

Crazy Mountain Oil & Gas Services
P.O. Box 577
Laurel, MT 59044
(406) 628-4164
(406) 628-4165

TO: Lisha
St of Utah.

FROM. Molly Conrad
Crazy Mountain Oil & Gas Services
(406) 628-4164

Pages Attached - Including Cover Sheet 2.

NOTE: Here is the letter you requested. Call if you need anything further.

Division of Oil, Gas and Mining

OPERATOR CHANGE WORKSHEET

Routing:	
1-LEC	6-LEC
2-GLH	7-KAS
3-DTS	8-SJ
4-VLD	9-FILE
5-JRB	

Attach all documentation received by the division regarding this change.
Initial each listed item when completed. Write N/A if item is not applicable.

☒ Change of Operator (well sold) ☐ Designation of Agent
☐ Designation of Operator ☐ Operator Name Change Only

The operator of the well(s) listed below has changed, **effective:** 9-30-97

TO: (new operator)	INLAND PRODUCTION COMPANY	FROM: (old operator)	EQUITABLE RESOURCES ENERGY
(address)	PO BOX 1446	(address)	PO BOX 577
	ROOSEVELT UT 84066		LAUREL MT 59044
			C/O CRAZY MTN O&G SERVICES
	Phone: (801)722-5103		Phone: (406)628-4164
	Account no. N5160		Account no. N9890

WELL(S) attach additional page if needed:

Name:	API:	Entity:	S	T	R	Lease:
SEE ATTACHED	43-013-31716					

OPERATOR CHANGE DOCUMENTATION

Lec 1. (r649-8-10) Sundry or other legal documentation has been received from the **FORMER** operator (attach to this form). (Rec'd 12-10-97)

Lec 2. (r649-8-10) Sundry or other legal documentation has been received from the **NEW** operator (Attach to this form). (Rec'd 10-20-97)

N/A 3. **The Department of Commerce** has been contacted if the new operator above is not currently operating any wells in Utah. Is the company **registered with the state?** (yes/no) _____ If yes, show company file number: _____.

Lec 4. **FOR INDIAN AND FEDERAL WELLS ONLY.** The BLM has been contacted regarding this change. Make note of BLM status in comments section of this form. BLM approval of **Federal** and **Indian** well operator changes should ordinarily take place prior to the division's approval, and before the completion of steps 5 **through** 9 below.

Lec 5. Changes have been entered in the **Oil and Gas Information System** (3270) for each well listed above. (12-9-97)

Lec 6. **Cardex** file has been updated for each well listed above. (12-10-97)

Lec 7. **Well file labels** have been updated for each well listed above. (12-10-97)

Lec 8. Changes have been included on the monthly "Operator, Address, and Account Changes" **memo** for distribution to Trust Lands, Sovereign Lands, UGS, Tax Commission, etc. (12-9-97)

Lec 9. A folder has been set up for the **Operator Change file,** and a copy of this page has been placed there for reference during routing and processing of the original documents.

OPERATOR CHANGE WORKSHEET (continued) - Initial each item when completed. Write N/A if item is not applicable.

ENTITY REVIEW

Yes 1. (r649-8-7) **Entity assignments have been reviewed** for all wells listed above. Were entity changes made? (yes/no) ____ If entity assignments were changed, attach copies of Form 6, Entity Action Form.

N/A 2. Trust Lands, Sovereign Lands, Tax Commission, etc., have been **notified** through normal procedures of entity changes.

BOND VERIFICATION - (FEE WELLS ONLY)

N/A/Yes 1. (r649-3-1) The **NEW** operator of any fee lease well listed above has furnished a proper bond.

___ 2. A **copy of this form** has been placed in the new and former operator's bond files.

___ 3. The **FORMER** operator has requested a release of liability from their bond (yes/no) _____, as of today's date _____. If yes, division response was made to this request by letter dated _____.

LEASE INTEREST OWNER NOTIFICATION OF RESPONSIBILITY

N/A 1. Copies of documents have been sent on _____ to _____ at Trust Lands for changes involving State leases, in order to remind that agency of their responsibility to review for proper bonding.
DT 3, 12/10/97

N/A 2. (r649-2-10) The former operator of any fee lease wells listed above has been contacted and informed by letter dated _____ 19 ___, of their responsibility to notify all interest owners of this change.

FILMING

✓ 1. All attachments to this form have been **microfilmed**. Today's date: 3.9.98.

FILING

___ 1. **Copies** of all attachments to this form have been filed in each **well file**.

___ 2. The **original of this form**, and the **original attachments** are now being filed in the Operator Change file.

COMMENTS

971209 Blm / Vernal Aprv. 12-4-97.

FORM 3160-5
(June 1990)

UNITED STATES
DEPARTMENT OF THE INTERIOR
BUREAU OF LAND MANAGEMENT

FORM APPROVED
Budget Bureau No. 1004-0135
Expires: March 31, 1993

SUNDRY NOTICES AND REPORTS ON WELLS

Do not use this form for proposals to drill or to deepen or reentry a different reservoir.
Use "APPLICATION FOR PERMIT -" for such proposals

5. Lease Designation and Serial No.
UTU-73086

6. If Indian, Allottee or Tribe Name
NA

7. If Unit or CA, Agreement Designation
NA

SUBMIT IN TRIPLICATE

1. Type of Well
[X] Oil Well [ ] Gas Well [ ] Other

8. Well Name and No.
MONUMENT FEDERAL 13-4-9-16

9. API Well No.
43-013-31716

2. Name of Operator
INLAND PRODUCTION COMPANY

10. Field and Pool, or Exploratory Area
MONUMENT BUTTE

3. Address and Telephone No.
475 17TH STREET, SUITE 1500, DENVER, COLORADO 80202 (303) 292-0900

11. County or Parish, State
DUCHESNE COUNTY, UTAH

4. Location of Well (Footage, Sec., T., R., m., or Survey Description)
2050 FSL 0660 FWL NW/SW Section 4, T09S R16E

12. **CHECK APPROPRIATE BOX(s) TO INDICATE NATURE OF NOTICE, REPORT, OR OTHER DATA**

TYPE OF SUBMISSION	TYPE OF ACTION	
[ ] Notice of Intent	[ ] Abandonment	[ ] Change of Plans
[X] Subsequent Report	[ ] Recompletion	[ ] New Construction
[ ] Final Abandonment Notice	[ ] Plugging Back	[ ] Non-Routine Fracturing
	[ ] Casing Repair	[ ] Water Shut-Off
	[ ] Altering Casing	[ ] Conversion to Injection
	[X] Other **Site Security**	[ ] Dispose Water
		(Note: Report results of multiple completion on Well Completion or Recompletion Report and Log form.)

13. Describe Proposed or Completed Operations (Clearly state all pertinent details, and give pertinent dates, including estimated date of starting any proposed work. If well is directionally drilled, give subsurface locations and measured and true vertical depths for all markers and zones pertinent to this work.)*

Attached please find the site security diagram for the above referenced well.

RECEIVED
OCT 13 1998
DIV. OF OIL, GAS & MINING

14. I hereby certify that the foregoing is true and correct
Signed Lisha E. Knight Title Manager, Regulatory Compliance Date 10/8/98

(This space for Federal or State office use)
Approved by _____ Title _____ Date _____
Conditions of approval, if any:
CC: UTAH DOGM

Title 18 U.S.C. Section 1001, makes it a crime for any person knowingly and willfully to make to any department or agency of the United States any false, fictitious or fradulent statements or representations as to any matter within its jurisdiction.

Inland Production Company
Site Facility Diagram

Monument Butte Federal 13-4

NW/SW Sec. 4, T9S, 16E

Duchesne County

July 28, 1998

Site Security Plan is held at the Roosevelt Office, Roosevelt Utah

Production Phase:

1) Valves 1 and 3 sealed closed

2) Valves 2 and 4 sealed open

Sales Phase:

1) Valves 1, 2, 4, sealed closed

2) Valves 1 open

Draining Phase:

1) Valve 3 open

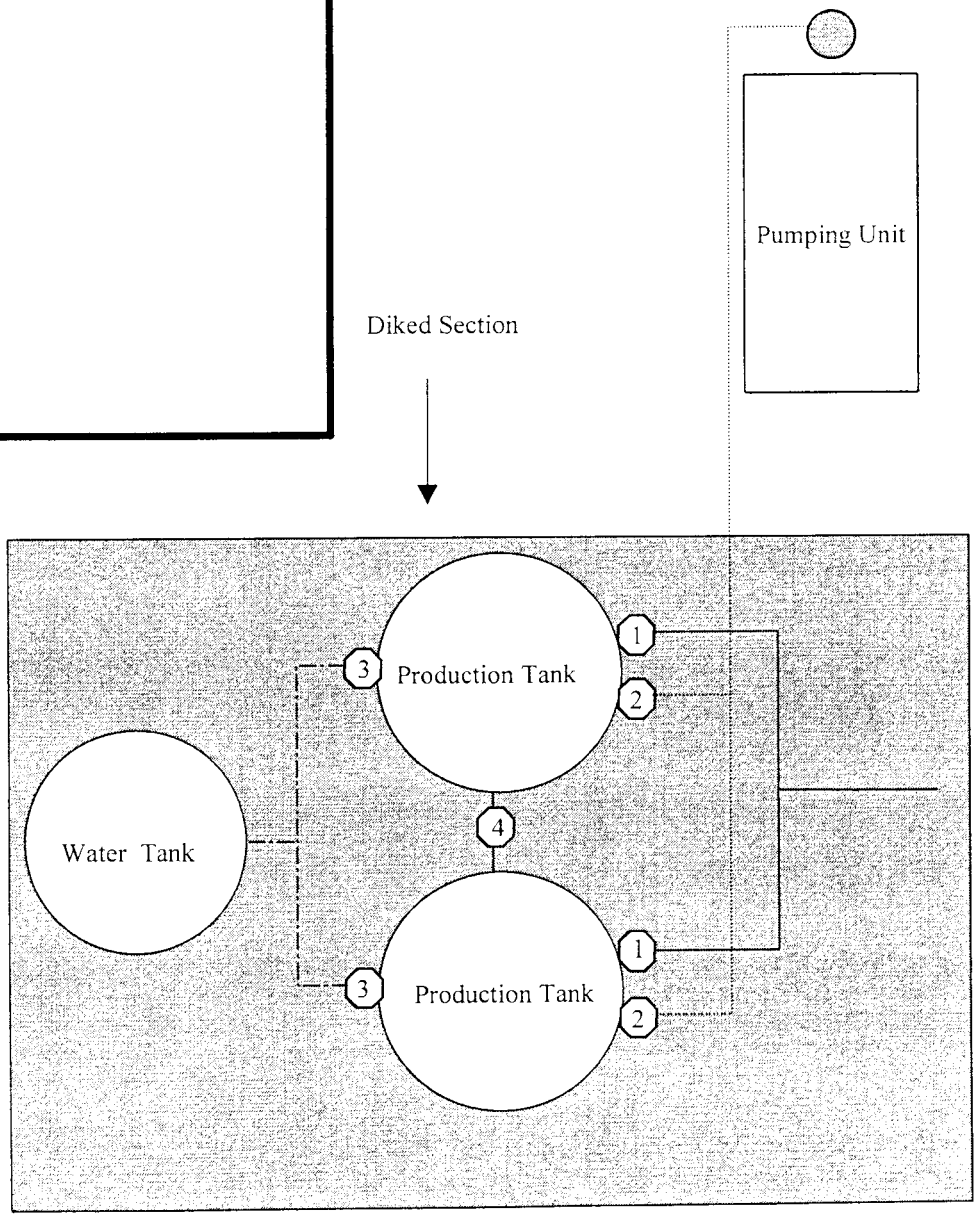

Emulsion Line .....

Load Line ————————

Water Line —·—·—·—·—·

United States Department of the Interior

BUREAU OF LAND MANAGEMENT
Utah State Office
P.O. Box 45155
Salt Lake City, UT 84145-0155
http://www.blm.gov

TAKE PRIDE IN AMERICA

IN REPLY REFER TO:
3106
(UT-924)

September 16, 2004

Memorandum

To: Vernal Field Office

From: Acting Chief, Branch of Fluid Minerals

Subject: Merger Approval

Attached is an approved copy of the name change recognized by the Utah State Office. We have updated our records to reflect the merger from Inland Production Company into Newfield Production Company on September 2, 2004.

Michael Coulthard
Acting Chief, Branch of
Fluid Minerals

Enclosure
1. State of Texas Certificate of Registration

cc: MMS, Reference Data Branch, James Sykes, PO Box 25165, Denver CO 80225
State of Utah, DOGM, Attn: Earlene Russell, PO Box 145801, SLC UT 84114
Teresa Thompson
Joe Incardine
Connie Seare

Corporations Section
P.O.Box 13697
Austin, Texas 78711-3697

Geoffrey S. Connor
Secretary of State

Office of the Secretary of State

The undersigned, as Secretary of State of Texas, does hereby certify that the attached is a true and correct copy of each document on file in this office as described below:

Newfield Production Company
Filing Number: 41530400

Articles of Amendment September 02, 2004

In testimony whereof, I have hereunto signed my name officially and caused to be impressed hereon the Seal of State at my office in Austin, Texas on September 10, 2004.

Secretary of State

ARTICLES OF AMENDMENT
TO THE
ARTICLES OF INCORPORATION
OF
INLAND PRODUCTION COMPANY

FILED
In the Office of the
Secretary of State of Texas

SEP 02 2004

Corporations Section

Pursuant to the provisions of Article 4.04 of the Texas Business Corporation Act (the "TBCA"), the undersigned corporation adopts the following articles of amendment to the articles of incorporation:

ARTICLE 1 – Name

The name of the corporation is Inland Production Company.

ARTICLE 2 – Amended Name

The following amendment to the Articles of Incorporation was approved by the Board of Directors and adopted by the shareholders of the corporation on August 27, 2004.

The amendment alters or changes Article One of the Articles of Incorporation to change the name of the corporation so that, as amended, Article One shall read in its entirety as follows:

"ARTICLE ONE – The name of the corporation is Newfield Production Company."

ARTICLE 3 – Effective Date of Filing

This document will become effective upon filing.

The holder of all of the shares outstanding and entitled to vote on said amendment has signed a consent in writing pursuant to Article 9.10 of the TBCA, adopting said amendment, and any written notice required has been given.

IN WITNESS WHEREOF, the undersigned corporation has executed these Articles of Amendment as of the 1st day of September, 2004.

INLAND RESOURCES INC.

By: Susan G. Riggs
Susan G. Riggs, Treasurer

UTSL-
071572A
065914

UTU-

02458
03563
03563A
04493
05843
07978
09803
017439B
017985
017991
017992
018073
019222
020252
020252A
020254
020255
020309D
022684A
027345
034217A
035521
035521A
038797
058149
063597A
075174
096547
096550

10760
11385
13905
15392

15855
16535
16539
16544
17036
17424
18048
18399
19267
26026A
30096
30103
31260
33992
34173
34346
36442
36846
38411
38428
38429
38431
39713
39714
40026
40652
40894
41377
44210
44426
44430
45431
47171
49092
49430
49950
50376
50385
50376
50750
51081
52013
52018
58546

61052
62848
63073B
63073D
63073E
63073O
64917
64379
64380
64381
64805
64806
64917
65207
65210
65635
65967
65969
65970
66184
66185
66191
67168
67170
67208
67549
67586
67845
68105
68548
68618
69060
69061
69744
70821
72103
72104
72105
72106
72107
72108
73086
73087
73807

73088
73089
73520A
74108
74805
74806
74807
74808
74389
74390
74391
74392
74393
74398
74399
74400
74404
74405
74406
74411
74805
74806
74826
74827
74835
74868
74869
74870
74872
74970
75036
75037
75038
75039
75075
75078
75089
75090
75234
75238
76239
76240
76241
76560

76561
76787
76808
76813
76954
76956
77233
77234
77235
77337
77338
77339
77357
77359
77365
77369
77370
77546
77553
77554
78022
79013
79014
79015
79016
79017
79831
79832
79833
79831
79834
80450
80915
81000

63073X
63098A
68528A
72086A
72613A
73520X
74477X
75023X
76189X
76331X
76788X
77098X
77107X
77236X
77376X
78560X
79485X
79641X
80207X
81307X

FORM 3160-5
(September 2001)

UNITED STATES
DEPARTMENT OF THE INTERIOR
BUREAU OF LAND MANAGEMENT

FORM APPROVED
OMB No. 1004-0135
Expires January 31,2004

SUNDRY NOTICES AND REPORTS ON WELLS

Do not use this form for proposals to drill or to re-enter an abandoned well. Use Form 3160-3 (APD) for such proposals.

SUBMIT IN TRIPLICATE - Other instructions on reverse side

5. Lease Serial No.
UTU73086

6. If Indian, Allottee or Tribe Name.

7. If Unit or CA/Agreement, Name and/or No.
S WELLS DRAW UNIT

1. Type of Well
☒ Oil Well ☐ Gas Well ☐ Other

8. Well Name and No.
MONUMENT FED 13-4-9-16

2. Name of Operator
Newfield Production Company

9. API Well No.
4301331716

3a. Address Route 3 Box 3630
Myton, UT 84052

3b. Phone No. *(include are code)*
435.646.3721

10. Field and Pool, or Exploratory Area
Monument Butte

4. Location of Well *(Footage, Sec., T., R., M., or Survey Description)*
2050 FSL 0660 FWL
NW/SW Section 4 T9S R16E

11. County or Parish, State
Duchesne,UT

12. CHECK APPROPRIATE BOX(ES) TO INIDICATE NATURE OF NOTICE, OR OTHER DATA

TYPE OF SUBMISSION	TYPE OF ACTION			
☐ Notice of Intent	☐ Acidize	☐ Deepen	☐ Production(Start/Resume)	☐ Water Shut-Off
☒ Subsequent Report	☐ Alter Casing	☐ Fracture Treat	☐ Reclamation	☐ Well Integrity
☐ Final Abandonment Notice	☐ Casing Repair	☐ New Construction	☐ Recomplete	☒ Other Weekly Status Report
	☐ Change Plans	☐ Plug & Abandon	☐ Temporarily Abandon	
	☐ Convert to Injector	☐ Plug Back	☐ Water Disposal	

13. Describe Proposed or Completed Operation (clearly state all pertinent details, including estimated starting date of any proposed work and approximate duration thereof. If the proposal is to deepen directionally or recomplete horizontally, give subsurface locations and measured and true vertical depths of all pertinent markers and zones. Attach the Bond under which the work will be performed or provide the Bond No. on file with BLM/BIA. Required subsequent reports shall be filed within 30 days following completion of the involved operations. If the operation results in a multiple completion or recompletion in a new interval, a Form 3160-4 shall be filed once testing has been completed. Final Abandonment Notices shall be filed only after all requirements, including reclamation, have been completed, and the operator has determined that the site is ready for final inspection.)

Subject well had recompletion procedures initiated in the Green River formation on 02/04/05. Existing production equipment was pulled from well. A bit and scraper were run in well. Three new Green River intervals were perforated and hydraulically fracture treated as follows: Stage #1: CP1 & CP .5 sands @ 5816-5821', 5808-5811', 5741-5751' (All 4 JSPF) fraced down 2 7/8" N-80 tubing w/ 49,276# 20/40 sand in 408 bbls Lightning 17 frac fluid. Stage #2: B1 sands @ 5130-5136', 5120-5125', (All 4 JSPF) fraced down 5 1/2" 15.5# casing w/40,000# 20/40 sand in 380 bbls Lightning 17 frac fluid. Stage #3: GB6 sands @ 4390-4400' (4 JSPF) fraced down 5 1/2" 15.5 # casing w/ 25,402# 20/40 sand in 268 bbls Lightning 17 frac fluid. Fracs were flowed back through chokes. Sand was cleaned from wellbore. New intervals were swab tested for sand cleanup. BHA & production tbg were run and anchored in well w/tubing anchor @ 5703', pump seating nipple @ 5771', and end of tubing string @ 5835'. A new 1 1/2" bore rod pump was run in well on sucker rods. Well returned to production via rod pump on 02/14/05.

I hereby certify that the foregoing is true and correct
Name *(Printed/ Typed)*
Tara Kinney

Title
Production Clerk

Signature
Tarah Kinney

Date
2/16/2005

THIS SPACE FOR FEDERAL OR STATE OFFICE USE

Approved by

Title

Date

Conditions of approval, if any, are attached. Approval of this notice does not warrant or certify that the applicant holds legal or equitable title to those rights in the subject lease which would entitle the applicant to conduct operations thereon.

Office

Title 18 U.S.C. Section 1001 and Title 43 U.S.C. Section 1212, make it a crime for any person knowingly and willfully to make to any department or agency of the United States any false, fictitious and fraudulent statements or representations as to any matter within its jurisdiction

(Instructions on reverse)

RECEIVED
FEB 22 2005
DIV. OF OIL, GAS & MINING

Division of Oil, Gas and Mining

OPERATOR CHANGE WORKSHEET

ROUTING
1. GLH
2. CDW
3. FILE

Change of Operator (Well Sold) — Designation of Agent/Operator

X Operator Name Change — **Merger**

The operator of the well(s) listed below has changed, effective: **9/1/2004**

FROM: (Old Operator):	**TO:** (New Operator):
N5160-Inland Production Company	N2695-Newfield Production Company
Route 3 Box 3630	Route 3 Box 3630
Myton, UT 84052	Myton, UT 84052
Phone: 1-(435) 646-3721	Phone: 1-(435) 646-3721

CA No. **Unit:** **SOUTH WELLS DRAW (GR)**

WELL(S)

NAME	SEC	TWN	RNG	API NO	ENTITY NO	LEASE TYPE	WELL TYPE	WELL STATUS
S WELLS DRAW 15-34-8-16	34	080S	160E	4301331670	13269	Federal	WI	A
CASTLE PEAK 1-3	03	090S	160E	4301330639	13269	Federal	WI	A
S WELLS DRAW 4-3-9-16	03	090S	160E	4301332096	13269	Federal	OW	P
BALCRON MON FED 14-4	04	090S	160E	4301331666	13269	Federal	WI	A
MON FED 13-4-9-16	04	090S	160E	4301331716	13269	Federal	OW	P
CASTLE PEAK 9R	05	090S	160E	4301315787	99998	Federal	NA	PA
MON FED 41-8-9-16	08	090S	160E	4301331619	13269	Federal	WI	A
MON FED 31-8-9-16	08	090S	160E	4301331721	13269	Federal	OW	P
FEDERAL 21-9Y	09	090S	160E	4301331396	13269	Federal	WI	A
MON FED 11-9-9-16	09	090S	160E	4301331618	13269	Federal	OW	P
S WELLS DRAW 9-9-9-16	09	090S	160E	4301332043	13269	Federal	WI	A
S WELLS DRAW 16-9-9-16	09	090S	160E	4301332044	13269	Federal	OW	P
CASTLE PK FED 24-10A	10	090S	160E	4301330555	13269	Federal	OW	P
MON FED 33-10-9-16	10	090S	160E	4301331722	13269	Federal	OW	P
MON FED 43-10-9-16	10	090S	160E	4301331723	13269	Federal	WI	A
S WELLS DRAW 2-10-9-16	10	090S	160E	4301331774	13269	Federal	OW	P
S WELLS DRAW 5-10-9-16	10	090S	160E	4301331811	13269	Federal	WI	A
S WELLS DRAW 6-10-9-16	10	090S	160E	4301332041	13269	Federal	OW	P
S WELLS DRAW 7-10-9-16	10	090S	160E	4301332042	13269	Federal	WI	A
S WELLS DRAW 11-10-9-16	10	090S	160E	4301332045	13269	Federal	WI	A
S WELLS DRAW 12-10-9-16	10	090S	160E	4301332046	13269	Federal	OW	P
S WELLS DRAW 13-10-9-16	10	090S	160E	4301332047	13269	Federal	OW	S

OPERATOR CHANGES DOCUMENTATION

Enter date after each listed item is completed

1. (R649-8-10) Sundry or legal documentation was received from the **FORMER** operator on: 9/15/2004
2. (R649-8-10) Sundry or legal documentation was received from the **NEW** operator on: 9/15/2004
3. The new company was checked on the **Department of Commerce, Division of Corporations Database on:** 2/23/2005
4. Is the new operator registered in the State of Utah: YES Business Number: 755627-0143
5. If **NO**, the operator was contacted contacted on:

6a. (R649-9-2)Waste Management Plan has been received on: IN PLACE

6b. Inspections of LA PA state/fee well sites complete on: waived

7. **Federal and Indian Lease Wells:** The BLM and or the BIA has approved the merger, name change, or operator change for all wells listed on Federal or Indian leases on: BLM BIA

8. **Federal and Indian Units:**
The BLM or BIA has approved the successor of unit operator for wells listed on: n/a

9. **Federal and Indian Communization Agreements ("CA"):**
The BLM or BIA has approved the operator for all wells listed within a CA on: na/

10. **Underground Injection Control ("UIC")** The Division has approved UIC Form 5, **Transfer of Authority to Inject,** for the enhanced/secondary recovery unit/project for the water disposal well(s) listed on: 2/23/2005

DATA ENTRY:

1. Changes entered in the **Oil and Gas Database on:** 2/28/2005
2. Changes have been entered on the **Monthly Operator Change Spread Sheet on:** 2/28/2005
3. Bond information entered in RBDMS on: 2/28/2005
4. Fee/State wells attached to bond in RBDMS on: 2/28/2005
5. Injection Projects to new operator in RBDMS on: 2/28/2005
6. Receipt of Acceptance of Drilling Procedures for APD/New on: waived

FEDERAL WELL(S) BOND VERIFICATION:

1. Federal well(s) covered by Bond Number: UT 0056

INDIAN WELL(S) BOND VERIFICATION:

1. Indian well(s) covered by Bond Number: 61BSBDH2912

FEE & STATE WELL(S) BOND VERIFICATION:

1. (R649-3-1) The **NEW** operator of any fee well(s) listed covered by Bond Number 61BSBDH2919

2. The **FORMER** operator has requested a release of liability from their bond on: n/a*
The Division sent response by letter on: n/a

LEASE INTEREST OWNER NOTIFICATION:

3. (R649-2-10) The **FORMER** operator of the fee wells has been contacted and informed by a letter from the Division of their responsibility to notify all interest owners of this change on: n/a

COMMENTS:

*Bond rider changed operator name from Inland Production Company to Newfield Production Company - **received 2/23/05**

NEWFIELD
ROCKY MOUNTAINS

March 11, 2011

Mr. Dan Jarvis
State of Utah
Division of Oil, Gas and Mining
Post Office Box 145801
Salt Lake City, Utah 84114-5801

RE: Permit Application for Water Injection Well
Monument Federal #13-4-9-16
Monument Butte Field, Lease #UTU-73086
Section 4-Township 9S-Range 16E
Duchesne County, Utah

Dear Mr. Jarvis:

Newfield Production Company herein requests approval to convert the Monument Federal #13-4-9-16 from a producing oil well to a water injection well in the Monument Butte (Green River) Field.

I hope you find this application complete; however, if you have any questions or require additional information, please contact me at (303) 893-0102.

Sincerely,

Eric Sundberg
Regulatory Lead

RECEIVED
MAR 21 2011
DIV. OF OIL, GAS & MINING

1001 17th Street, Suite 2000 Denver, CO 80202 (303) 893-0102 Fax (303) 893-0103

NEWFIELD PRODUCTION COMPANY

APPLICATION FOR APPROVAL OF CLASS II INJECTION WELL

MONUMENT FEDERAL #13-4-9-16

MONUMENT BUTTE FIELD (GREEN RIVER) FIELD

LEASE #UTU-73086

MARCH 11, 2011

TABLE OF CONTENTS

LETTER OF INTENT
COVER PAGE
TABLE OF CONTENTS
UIC FORM 1 – APPLICATION FOR INJECTION WELL
WELLBORE DIAGRAM OF PROPOSED INJECTION
WORK PROCEDURE FOR INJECTION CONVERSION
COMPLETED RULE R615-5-1 QUESTIONNAIRE
COMPLETED RULE R615-5-2 QUESTIONNAIRE

ATTACHMENT A	ONE-HALF MILE RADIUS MAP
ATTACHMENT A-1	WELL LOCATION PLAT
ATTACHMENT B	LIST OF SURFACE OWNERS WITHIN ONE-HALF MILE RADIUS
ATTACHMENT C	CERTIFICATION FOR SURFACE OWNER NOTIFICATION
ATTACHMENT E	WELLBORE DIAGRAM – MONUMENT FEDERAL #13-4-9-16
ATTACHMENT E-1	WELLBORE DIAGRAM – MONUMENT FEDERAL #11-9-9-16
ATTACHMENT E-2	WELLBORE DIAGRAM – SOUTH WELLS DRAW FEDERAL #R-4-9-16
ATTACHMENT E-3	WELLBORE DIAGRAM – SOUTH WELLS DRAW FEDERAL #11-4-9-16
ATTACHMENT E-4	WELLBORE DIAGRAM – SOUTH WELLS DRAW FEDERAL #B-8-9-16
ATTACHMENT E-5	WELLBORE DIAGRAM – SOUTH WELLS DRAW #16-5T-9-16
ATTACHMENT E-6	WELLBORE DIAGRAM – SOUTH WELLS DRAW #U-5-9-16
ATTACHMENT E-7	WELLBORE DIAGRAM – SOUTH WELLS DRAW #10-4-9-16
ATTACHMENT E-8	WELLBORE DIAGRAM – SOUTH WELLS DRAW #14A-4-9-16
ATTACHMENT E-9	WELLBORE DIAGRAM – SOUTH WELLS DRAW #X-4-9-16
ATTACHMENT E-10	WELLBORE DIAGRAM – WELLS DRAW FEDERAL #F-4-9-16
ATTACHMENT E-11	WELLBORE DIAGRAM – WELLS DRAW FEDERAL #G-4-9-16
ATTACHMENT E-12	WELLBORE DIAGRAM – WELLS DRAW #H-4-9-16
ATTACHMENT E-13	WELLBORE DIAGRAM – WELLS DRAW #8-5-9-16
ATTACHMENT E-14	WELLBORE DIAGRAM – WELLS DRAW #6-4-9-16
ATTACHMENT E-15	WELLBORE DIAGRAM – WELLS DRAW #10-5-9-16
ATTACHMENT E-16	WELLBORE DIAGRAM – NGC #12-4G-9-16
ATTACHMENT E-17	WELLBORE DIAGRAM – NGC FEDERAL #32-5G-9-16
ATTACHMENT E-18	WELLBORE DIAGRAM – FEDERAL #11-4G-9-16
ATTACHMENT E-19	WELLBORE DIAGRAM – CASTLE PEAK FEDERAL #43-5-9-16
ATTACHMENT E-20	WELLBORE DIAGRAM – BALCRON MONUMENT FEDERAL #14-4-9-16
ATTACHMENT F	WATER ANALYSIS
ATTACHMENT G	FRACTURE GRADIENT CALCULATIONS
ATTACHMENT G-1	FRACTURE REPORTS DATED – *1/17/97 – 2/4/97 & 2/5/05 – 2/15/05*
ATTACHMENT H	WORK PROCEDURE FOR PROPOSED PLUG AND ABANDON
ATTACHMENT H-1	WELLBORE DIAGRAM OF PROPOSED PLUGGED WELL

STATE OF UTAH
DIVISION OF OIL, GAS AND MINING

APPLICATION FOR INJECTION WELL - UIC FORM 1

OPERATOR Newfield Production Company
ADDRESS 1001 17th Street, Suite 2000
Denver, Colorado 80202

Well Name and number: Monument Federal #13-4-9-16
Field or Unit name: Monument Butte (Green River) Lease No. UTU-73086
Well Location: QQ NWSW section 4 township 9S range 16E county Duchesne

Is this application for expansion of an existing project? . . . . . Yes [X] No [ ]
Will the proposed well be used for: Enhanced Recovery? . . . . . Yes [X] No [ ]
Disposal? . . . . . Yes [ ] No [X]
Storage? . . . . . Yes [ ] No [X]

Is this application for a new well to be drilled? . . . . . Yes [ ] No [X]
If this application is for an existing well,
has a casing test been performed on the well?. . . . . Yes [ ] No [X]
Date of test:
API number: 43-013-31716

Proposed injection interval: from 4163 to 5924
Proposed maximum injection: rate 500 bpd pressure 1886 psig
Proposed injection zone contains [x] oil, [ ] gas, and/or [ ] fresh water within 1/2 mile of the well.

IMPORTANT: Additional information as required by R615-5-2 should accompany this form.

List of Attachments: Attachments "A" through "H-1"

I certify that this report is true and complete to the best of my knowledge.

Name: Eric Sundberg Signature
Title Regulatory Lead Date 3/14/11
Phone No. (303) 893-0102

(State use only)
Application approved by Title
Approval Date

Comments:

Monument Federal #13-4-9-16

Spud Date: 1-6-97
Put on Production: 2-4-97
GL: 5761' KB: 5773'

Initial Production: 65 BOPD, 116 MCFD
0 BWPD

Proposed Injection
Wellbore Diagram

SURFACE CASING

CSG SIZE: 8-5/8"
GRADE: J-55
WEIGHT: 24#
LENGTH: 5 JTS (253')
DEPTH LANDED: 263'
HOLE SIZE: 12-1/4"
CEMENT DATA: 160 sks Class G cement

PRODUCTION CASING

CSG SIZE: 5-1/2"
GRADE: J-55
WEIGHT: 15.5#
LENGTH: 140 jts
HOLE SIZE: 7-7/8"
CEMENT DATA: 275 sks Prem Lite & 500 sks 50/50 Poz mix
CEMENT TOP AT: 785'
DEPTH LANDED: 5925'

TUBING

SIZE/GRADE/WT: 2-7/8", J-55, 6.5#
NO. OF JOINTS: 144 jts (4558.22')
36 jts new (1142.10')
TUBING ANCHOR: 5700.3' KB
NO. OF JOINTS: 2 jts (63.60')
SEATING NIPPLE: 2-7/8" (1.10')
SN LANDED AT: 5767.69' KB
NO. OF JOINTS: 2 jt (62.23')
TOTAL STRING LENGTH: EOT @ 5831' KB

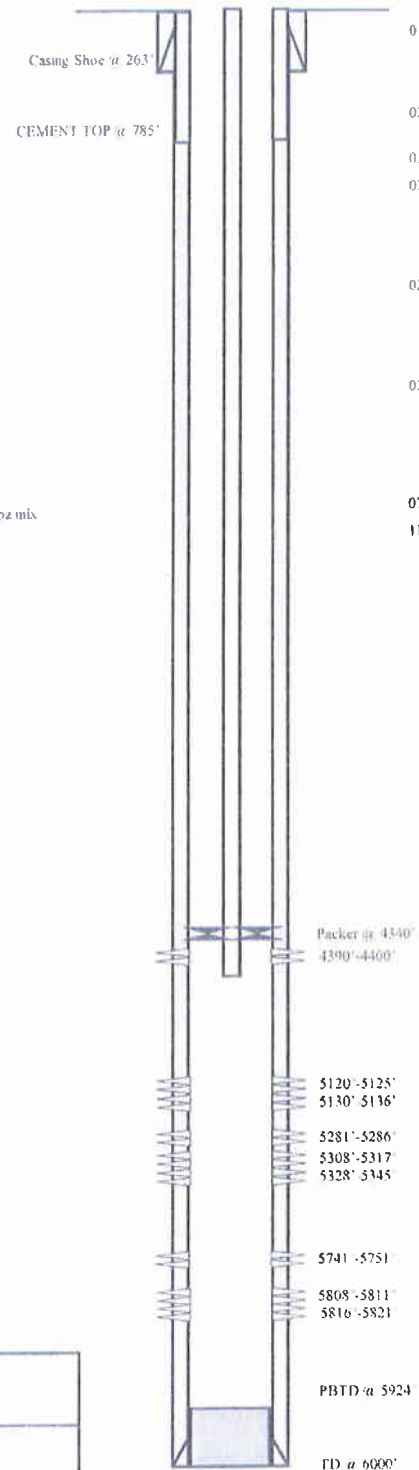

FRAC JOB

01/21/97	5281'-5345'	**27,000#'s 320/40 sand, 66,900# 16/30 sand, and 27,678 gals fluid. Treated w/avg rate of 30.8 BPM w/ avg press of 1690 psi. ISIP-1920 psi**
02/13/02		Tubing leak. Update rod and tubing details
03/13/03		Parted polished rod. Update rod detail
02/08/05	5741'-5821'	**Frac CP1 and CP.5 sands as follows:** 49276#'s of 20/40 sand in 408 bbls of lighting 17 fluid. Treated w/avg press of 3750 psi @ avg rate of 14.3 bpm. ISIP 2400 psi. Calc flush: 5739 gal. Actual flush: 1419 gal
02/08/05	5120'-5136'	**Frac B1 sands as follows:** 40,000#s of 20/40 sand in 380 bbls of lighting 17 fluid. Treated w/avg press of 2189 psi @ avg rate of 24.8 bpm. ISIP 2140 psi. Calc flush: 1965 gal. Actual flush: 4909 gal
02/09/05	4390'-4400'	**Frac GB6 sands as follows:** 25,402#s of 20/40 sand in 268 bbls of lightning 17 fluid. Treated w/avg press of 2095 psi @ avg rate of 24.7 bpm. ISIP 2140 psi. Calc flush: 4388 gal. Actual flush: 4305 gal.
07/11/06	Tubing Leak	Rod & Tubing detail updated.
11/22/10		Parted rods. Rod & tubing details updated.

PERFORATION RECORD

02/07/05	5816'-5821'	4JSPF	20 holes
02/07/05	5808'-5811'	4JSPF	12 holes
02/07/05	5741'-5751'	4JSPF	40 holes
01/18/97	5328'-5345'	4JSPF	68 holes
01/18/97	5308'-5317'	4JSPF	36 holes
01/18/97	5281'-5286'	4JSPF	20 holes
02/07/05	5130'-5136'	4JSPF	24 holes
02/07/05	5120'-5125'	4JSPF	20 holes
02/09/05	4390'-4400'	4JSPF	40 holes

NEWFIELD

Monument Federal #13-4-9-16

2050 FSL & 660 FWL

NWSW Section 4-T9S-R16E

Duchesne Co, Utah

API #43-013-31716; Lease #UTU-73086

JL 2/16/2011

WORK PROCEDURE FOR INJECTION CONVERSION

1. Rig up hot oil truck to casing. Pump water. Unseat pump. Flush rods. Trip out of hole with rods and pump.

2. Trip out of hole with tubing, breaking and doping every connection. Trip in hole with packer and tubing. Rig up water truck to casing. Pump packer fluid. Set packer.

3. Test casing and packer.

4. Rig down and move out.

REQUIREMENTS FOR INJECTION OF FLUIDS INTO RESERVOIRS
RULE R615-5-1

1. **Operations to increase ultimate recovery, such as cycling of gas, the maintenance of pressure, the introduction of gas, water or other substances into a reservoir for the purpose of secondary or other enhanced recovery or for storage and the injection of water into any formation for the purpose of water disposal shall be permitted only by order of the Board after notice and hearing.**

2. **A request for agency action for authority for the injection of gas, liquified petroleum gas, air, water or any other medium into any formation for any reason, including but not necessarily limited to the establishment of or the expansion of waterflood projects, enhanced recovery projects, and pressure maintenance projects shall contain:**

   2.1 **The name and address of the operator of the project.**

   Newfield Production Company
   1001 17th Street, Suite 2000
   Denver, Colorado 80202

   2.2 **A plat showing the area involved and identifying all wells, including all proposed injection wells, in the project area and within one-half mile of the project area.**

   See Attachment A.

   2.3 **A full description of the particular operation for approval is requested.**

   Approval is requested to convert the Monument Federal #13-4-9-16 from a producing oil well to a water injection well in Monument Butte (Green River) Field.

   2.4 **A description of the pools from which the identified wells are producing or have produced.**

   The proposed injection well will inject into the Green River Formation.

   2.5 **The names, description and depth of the pool or pools to be affected.**

   The injection zone is in the Green River Formation. For the Monument Federal #13-4-9-16 well, the proposed injection zone is from Garden Gulch to Castle Peak (4163' - 5924'). The confining strata directly above and below the injection zones are the Garden Gulch and the top of the Wasatch Formation or TD, which ever is shallower. The Garden Gulch Marker top is at 3828' and the TD is at 6000'.

   2.6 **A copy of a log of a representative well completed in the pool.**

   The referenced log for the Monument Federal #13-4-9-16 is on file with the Utah Division of Oil, Gas and Mining.

2.7 A statement as to the type of fluid to be used for injection, its source and the estimated amounts to be injected daily.

The primary type and source of fluid to be used for injection will be culinary water commingled with produced water. The average estimated injection of fluids will be at a rate of 300 BPD, and the estimated maximum injection will be at a rate of 500 BPD.

2.8 A list of all operators and surface owners within one-half mile radius of the proposed project.

See Attachment B.

2.9 An affidavit certifying that said operators or owners and surface owners within a one-half mile radius have been provided a copy of the petition for injection.

See Attachment C.

2.10 Any additional information the Board may determine is necessary to adequately review the petition.

Newfield Production Company will supply any additional information requested by the Utah Division of Oil, Gas and Mining.

4.0 Establish recovery projects may be expanded and additional wells placed on injection only upon authority from the Board after notice and hearing or by administrative approval.

This proposed injection well is on a Federal lease (Lease #UTU-73086) in the Monument Butte Federal (Green River) Field, and this request is for administrative approval.

REQUIREMENTS FOR CLASS II INJECTION WELLS INCLUDING WATER DISPOSAL, STORAGE AND ENHANCED RECOVERY WELLS
SECTION V – RULE R615-5-2

1. **Injection well shall be completed, equipped, operated, and maintained in a manner that will prevent pollution and damage to any USDW, or other resources and will confine injected fluids to the interval approved.**

2. **The application for an injection well shall include a properly completed Form DOGM-UIC-1 and the following:**

   2.1 **A plat showing the location of the injection well, all abandoned or active wells within a one-half mile radius of the proposed wells, and the surface owner and the operator of any lands or producing leases, respectively, within a one-half mile radius of the proposed injection well.**

   See Attachments A and B.

   2.2 **Copies of electrical or radioactive logs, including gamma ray logs, for the proposed well run prior to the installation of casing and indicating resistivity, spontaneous potential, caliper and porosity.**

   All logs are on file with the Utah Division of Oil, Gas and Mining.

   2.3 **A copy of a cement bond or comparable log run for the proposed injection well after casing was set and cemented.**

   A copy of the cement bond log is on file with the Utah Division of Oil, Gas and Mining.

   2.4 **Copies of logs already on file with the Division should be referenced, but need not be refiled.**

   All copies of logs are on file with the Utah Division of Oil, Gas and Mining.

   2.5 **A description of the casing or proposed casing program of the injection well and of the proposed method for testing the casing before use of the well.**

   The casing program is 8-5/8", 24# surface casing run to 263' KB, and 5-1/2", 15.5# casing run from surface to 5969' KB. A casing integrity test will be conducted at the time of conversion. See Attachment E.

   2.6 **A statement as to the type of fluid to be used for injection, its source and estimated amounts to be injected daily.**

   The primary type and source of fluid to be used for injection will be culinary water commingled with produced water. The estimated average rate of injection will be 300 BPD, and the estimated maximum rate of injection will be 500 BPD.

   2.7 **Standard laboratory analysis of the fluid to be injected, the fluid in the formation into which the fluid is being injected, and the compatibility of the fluids.**

   See Attachment F.

The proposed average and maximum injection pressures.

The proposed average injection pressure will be approximately 1100 psig and the maximum injection pressure will not exceed 1886 psig.

2.8 Evidence and data to support a finding that the proposed injection well will not initiate fractures through the overlying strata or a confining interval that could enable the injected fluid or formation fluid to enter the fresh water strata.

The minimum fracture gradient for the Monument Federal #13-4-9-16, for existing perforations (4390' - 45821') calculates at 0.80 psig/ft. The maximum injection pressures will be limited so as not to exceed this gradient. A step rate test will be performed periodically to ensure we are below parting pressure. The proposed maximum injection pressure is 1886 psig. We may add additional perforations between 3828' and 6000'. See Attachments G and G-1.

2.9 Appropriate geological data on the injection interval and confining beds, including the geologic name, lithologic description, thickness, depth, and lateral extent.

In the Monument Federal #13-4-9-16, the proposed injection zone (4163' - 5924') is in the Garden Gulch to the Castle Peak of the Green River Formation. The reservoir is a very fine-grained sandstone with minor imbedded shale streaks. The estimated porosity is 13%. The members are composed of porous and permeable lenticular calcareous sandstone and low porosity carbonates and calcareous shale. The porous and lenticular sandstone varies in thickness from 0-31' and is confined to the Monument Butte Federal Field. Outside the Monument Butte Federal Field, the sandstone is composed of tight, very fine, silty, calcareous sandstone, less than 3' thick. The stratum confining the injection zone is composed of tight, moderately calcareous, sandy lacustrine shale. All of the confining strata are impermeable, and will effectively seal off the oil, gas, and water of the injection zone from any strata directly above or below it.

2.10 A review of the mechanical condition of each well within a one-half mile radius of the proposed injection well to assure that no conduit exists that could enable fluids to migrate up or down the wellbore and enter the improper intervals.

See Attachments E through E-20.

Additionally, the injection system will be equipped with high and low pressure shut down devices that will automatically shut in injection waters if a system blockage or leakage occurs. One way check valves will also ensure proper flow management. Relief valves will also be utilized for high-pressure relief.

2.11 An affidavit certifying that a copy of the application has been provided to all operators or owners, and surface owners within a one-half mile radius of the proposed injection well.

See Attachment C.

2.12 Any other information that the Board or Division may determine is necessary to adequately review the application.

Newfield Production Company will supply any requested information to the Board or Division.

ATTACHMENT A

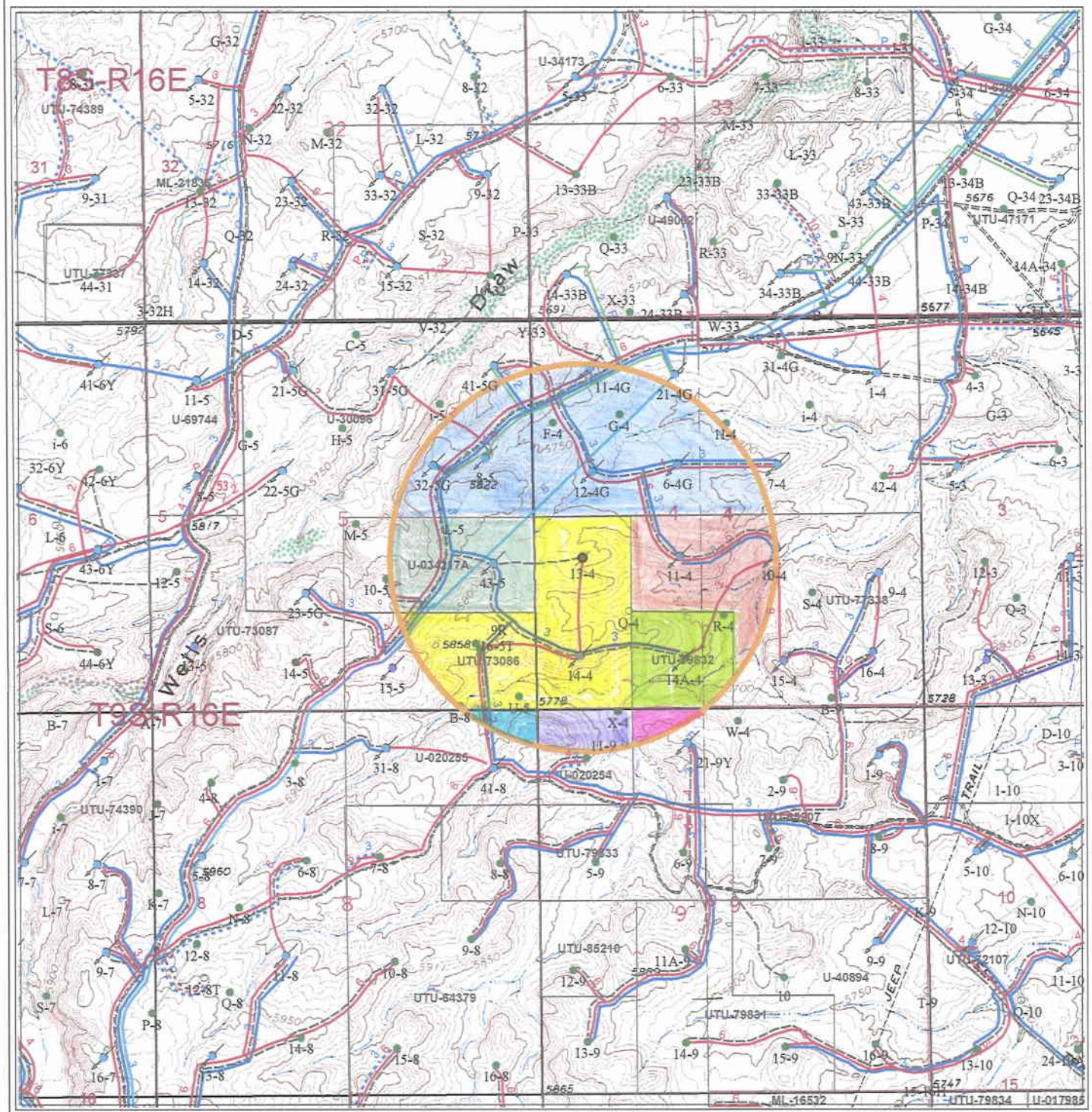

- 13-4-9-16

Well Status
- Location
- CTI
- Surface Spud
- Drilling
- Waiting on Completion
- Producing Oil Well
- Producing Gas Well
- Water Injection Well
- Dry Hole
- Temporarily Abandoned
- Plugged & Abandoned
- Shut In
- Countyline
- 13_4_9_16_Buffer

Injection system
- high pressure
- low pressure
- proposed
- return
- return proposed
- Leases
- Mining tracts

Gas Pipelines
- Gathering lines
- Proposed lines

UTU-73086
UTU-30096
UTU-034217A
UTU-020255
UTU-020254
UTU-65207
UTU-79832
UTU-77338

Monument 13-4
Section 4, T9S-R16E

NEWFIELD
ROCKY MOUNTAINS

N

1" = 2000'

1/2 Mile Radius Map
Duchesne & Uintah Counties

1001 17th Street Suite 2000
Denver, Colorado 80202
Phone: (303) 893-0102

January 17, 2011

ATTACHMENT A-1

T9S, R16E, S.L.B.&M.

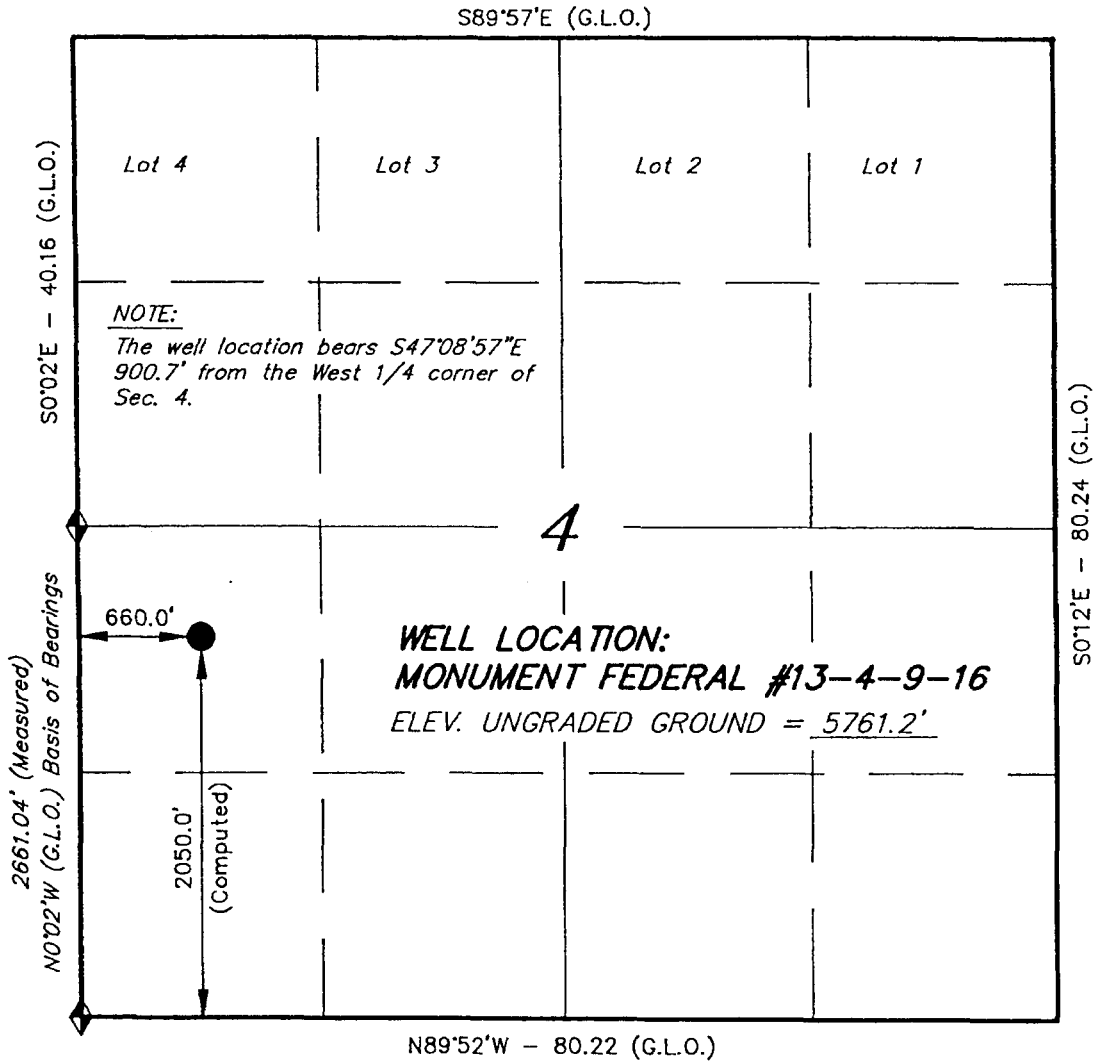

◆ = SECTION CORNERS LOCATED

BASIS OF ELEV; U.S.G.S. 7-1/2 min QUAD (MYTON SW)

EQUITABLE RESOURCES ENERGY CO.

WELL LOCATION, MONUMENT FEDERAL #13-4-9-16, LOCATED AS SHOWN IN THE NW 1/4 SW 1/4 OF SECTION 4, T9S, R16E, S.L.B.&M. DUCHESNE COUNTY, UTAH.

N

THIS IS TO CERTIFY THAT THE ABOVE PLAT WAS PREPARED FROM FIELD NOTES OF ACTUAL SURVEYS MADE BY ME OR UNDER MY SUPERVISION AND THAT THE SAME ARE TRUE AND CORRECT TO THE BEST OF MY KNOWLEDGE AND BELIEF.

REGISTERED LAND SURVEYOR
REGISTRATION No. 144102
STATE OF UTAH

REGISTERED LAND SURVEYOR REGISTRATION NO. 144102 STATE OF UTAH

TRI STATE LAND SURVEYING & CONSULTING
38 WEST 100 NORTH - VERNAL, UTAH 84078
(801) 781-2501

SCALE: 1" = 1000'	SURVEYED BY: G.S.
DATE: 9-8-96	WEATHER: WARM
NOTES:	FILE #

EXHIBIT B

#	Legal Description	Lessor & Expiration	Lessee & Operating Rights	Surface Owner
1	T9S,R16E SLM Section 4: W2SW Section 5: S2SE	USA UTU-73086 HBP	Newfield Production Company Newfield RMI LLC	USA
2	T9S,R16E SLM Section 4: Lots 1-4 (N2N2), S2N2 Section 5: Lots 1-3 (N2NE, NENW), S2NE, SENW, NESW	USA UTU-30096 HBP	Newfield Production Company Newfield RMI LLC	USA
3	T9S,R16E SLM Section 5: N2SE	USA UTU-034217A HBP	Newfield Production Company Newfield RMI LLC	USA
4	T9S,R16E SLM Section 8: N2NE	USA UTU-020255 HBP	Newfield Production Company Newfield RMI LLC	USA
5	T9S,R16E SLM Section 9: NWNW	USA UTU-020254 HBP	Newfield Production Company Newfield RMI LLC	USA

EXHIBIT B

#	Legal Description	Lessor & Expiration	Lessee & Operating Rights	Surface Owner
6	T9S,R16E SLM Section 9: NE, NENW Section 10: N2NW	USA UTU-65207 HBP	Newfield Production Company Newfield RMI LLC Yates Petroleum Corporation Yates Drilling Company ABO Petroleum Corporation MYCO Industries, Inc.	USA
7	T9S,R16E SLM Section 3: SE Section 4: SESW	USA UTU-79832 HBP	Newfield Production Company Newfield RMI LLC Yates Petroleum Corporation	USA
8	T9S,R16E SLM Section 3: Lots 3-4 (N2NW), S2NW, SW Section 4: SE, NESW	USA UTU-77338 HBP	Newfield Production Company Newfield RMI LLC	USA

ATTACHMENT C

CERTIFICATION FOR SURFACE OWNER NOTIFICATION

RE: Application for Approval of Class II Injection Well
Monument Federal #13-4-9-16

I hereby certify that a copy of the injection application has been provided to all surface owners within a one-half mile radius of the proposed injection well.

Signed: _____
Newfield Production Company
Eric Sundberg
Regulatory Lead

Sworn to and subscribed before me this 14th day of March, 2011.

Notary Public in and for the State of Colorado: Candice L. Twitty

My Commission Expires: My Commission Expires 02/10/2013

CANDICE L. TWITTY NOTARY PUBLIC STATE OF COLORADO

Attachment E

Monument Federal #13-4-9-16

Spud Date: 1-6-97
Put on Production: 2-4-97
GL: 5761' KB: 5773'

Initial Production: 65 BOPD, 116 MCFD
0 BWPD

Wellbore Diagram

SURFACE CASING

CSG SIZE: 8-5/8"
GRADE: J-55
WEIGHT: 24#
LENGTH: 5 JTS (253')
DEPTH LANDED: 263'
HOLE SIZE: 12-1/4"
CEMENT DATA: 160 sks Class G cement

PRODUCTION CASING

CSG SIZE: 5-1/2"
GRADE: J-55
WEIGHT: 15.5#
LENGTH: 140 jts
HOLE SIZE: 7-7/8"
CEMENT DATA: 275 sks Prem Lite & 500 sks 50/50 Poz mix
CEMENT TOP AT: 785'
DEPTH LANDED: 5925'

TUBING

SIZE/GRADE/WT: 2-7/8", J-55, 6.5#
NO. OF JOINTS: 144 jts (4558.22')
36 jts new (1142.10')
TUBING ANCHOR: 5700.3' KB
NO. OF JOINTS: 2 jts (64.60')
SEATING NIPPLE: 2-7/8" (1.10')
SN LANDED AT: 5767.60' KB
NO. OF JOINTS: 2 jt (62.23')
TOTAL STRING LENGTH: EOT @ 5831' KB

SUCKER RODS

POLISHED ROD: 1-1/4" x 22'
SUCKER RODS: 1-2', 1-4' x 3/4" pony rod, 88-3/4" guided rods, 85-3/4" sucker rods, 50-3/4" guided rods, 8-1 1/2" sinker bars
PUMP SIZE: 2.5 x 1.5" x 12' x 16' RHAC 12-4-13-16
STROKE LENGTH: 86"
PUMP SPEED, SPM: 5
LOGS: DLL/GR, LDT/CNL

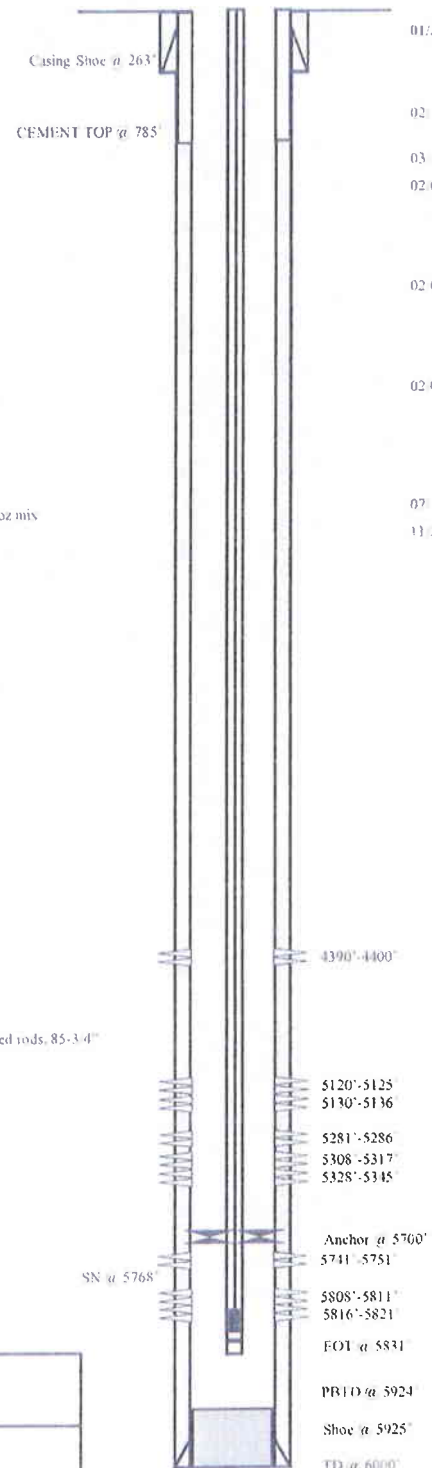

FRAC JOB

01/21/97	5281'-5345'	**27,000#'s 320/40 sand, 66,900# 16/30 sand, and 27,678 gals fluid. Treated w/avg rate of 30.8 BPM w/ avg press of 1690 psi, ISIP-1920 psi**
02/13/02		Tubing leak. Update rod and tubing details.
03/13/03		Parted polished rod. Update rod detail
02/08/05	5741'-5821'	**Frac CP1 and CP.5 sands as follows:** 49276#'s of 20/40 sand in 408 bbls of lighting 17 fluid. Treated w/avg press of 3750 psi @ avg rate of 14.3 bpm. ISIP 2400 psi. Calc flush: 5739 gal. Actual flush: 1419 gal
02/08/05	5120'-5136'	**Frac B1 sands as follows:** 40,000#s of 20/40 sand in 380 bbls of lighting 17 fluid. Treated w/avg press of 2189 psi @ avg rate of 24.8 bpm. ISIP 2140 psi. Calc flush: 1965 gal. Actual flush: 4909 gal.
02/09/05	4390'-4400'	**Frac GB6 sands as follows:** 25,402#s of 20/40 sand in 268 bbls of lightning 17 fluid. Treated w/avg press of 2095 psi @ avg rate of 24.7 bpm. ISIP 2140 psi. Calc flush: 4388 gal. Actual flush: 4305 gal.
07/11/06	Tubing Leak	Rod & Tubing detail updated.
11/22/10		Parted rods. Rod & tubing details updated

PERFORATION RECORD

02/07/05	5816'-5821'	4JSPF	20 holes
02/07/05	5808'-5811'	4JSPF	12 holes
02/07/05	5741'-5751'	4JSPF	40 holes
01/18/97	5328'-5345'	4JSPF	68 holes
01/18/97	5308'-5317'	4JSPF	36 holes
01/18/97	5281'-5286'	4JSPF	20 holes
02/07/05	5130'-5136'	4JSPF	24 holes
02/07/05	5120'-5125'	4JSPF	20 holes
02/09/05	4390'-4400'	4JSPF	40 holes

NEWFIELD

Monument Federal #13-4-9-16

2050 FSL & 660 FWL

NWSW Section 4-T9S-R16E

Duchesne Co, Utah

API #43-013-31716; Lease #UTU-73086

TW 12/29/10

ATTACHMENT E-1

Monument Federal #11-9-9-16

Spud Date: 3/20/96
Put on Production: 3/29/96
GL: 5756' KB: 5766' (10' KB)

Initial Production: 113 BOPD, 0 MCFD
18 BWPD

Wellbore Diagram

SURFACE CASING

CSG SIZE: 8-5/8"
GRADE: J-55
WEIGHT: 24#
LENGTH: 7 JTS - 288'
DEPTH LANDED: 298' KB
HOLE SIZE: 12-1/4"
CEMENT DATA: 160 sx Class "G"cmt

PRODUCTION CASING

CSG SIZE: 5-1/2"
GRADE: J-55
WEIGHT: 15.5#
LENGTH: 134 jts. (5856.70')
SET AT: 5866.7' KB
HOLE SIZE: 7-7/8"
CEMENT DATA: 265 sxs Super "G", 348 sxs 50/50 poz.
CEMENT TOP AT: 1530' KB

TUBING

SIZE/GRADE/WT: 2-7/8", J-55, 6.5#
NO. OF JOINTS: 162 jts. (5193.04')
TUBING ANCHOR: 5203.04' KB
NO. OF JOINTS: 1 jt. (32.03')
SEATING NIPPLE: 1.10'
SN LANDED AT: 5229.19' KB
NO. OF JOINTS: 1 jt. (59.70')
NOTCHED COLLAR: 2-7/8" (5288.9')
TOTAL STRING LENGTH: EOT @ 5289' KB

SUCKER RODS

POLISHED ROD: 1 1/2" x 22' polished rod
SUCKER RODS: 91- ¾" guided rods, 74- ¾" sucker rods, 38- ¾" guided rods, 6- 1 ½" weight bars
PUMP SIZE: 2 1/2" x 1 1/2" x 12' x 16' RHAC pump w/ SM Plunger
STROKE LENGTH: 83"
PUMP SPEED, SPM: 4 SPM
LOGS: DLL, CNL/Litho-Density, CBL/GR

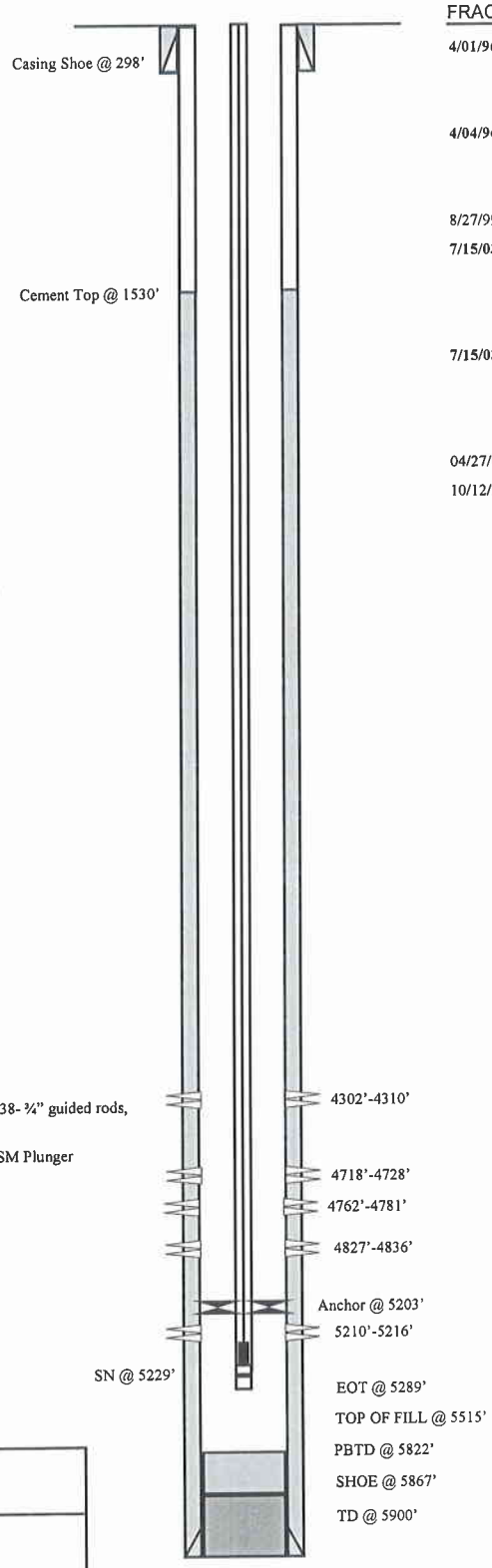

FRAC JOB

4/01/96	4762'-4836'	**Frac sand as follows:** 110,000# 16/30 sand in 790 bbl 2% frac fluid. ATP 3800 psi, ATR 35.5 bpm, ISIP 3500 psi. Calc. Flush: 4762 gal. Actual flush: 4704 gal.
4/04/96	4302'-4310'	**Frac sand as follows:** 50,090# 16/30 sand in 402 bbl 2% frac fluid. ATP 3600 psi, ATR 31.6 bpm, ISIP 2450 psi. Calc. Flush: 4302 gal. Actual flush: 4242 gal.
8/27/99		Pump change. Update rod and tubing details.
7/15/03	5210'-5216'	**Frac A1 sands as follows:** 23,892#'s of 20/40 sand in 215 bbls Viking 1-25 fluid. Treated @ avg press. Of 3370 w/avg rate of 14.7 bpm. ISIP 2200 psi. Calc flush: 1362 gal. Actual flush: 1260 gals.
7/15/03	4718'-4728'	**Frac DS3 sands as follow:** 25,000#'s of 20/40 sand in 200 bbls Viking 1-25 fluid. Treated @ avg press of 3880 psi w/avg rate of 14.7 bpm. ISIP 3960 psi. Calc flush: 1233 gal. Actual flush: 1134 gal.
04/27/05		Pump change. Update rod and tubing detail.
10/12/2010		Parted rods. Updated rod and tubing detail.

PERFORATION RECORD

3-28-96	4762'-4772'		4 holes
3-28-96	4775'-4778'		3 holes
3-28-96	4780'-4781'		1 holes
3-28-96	4827'-4836'		6 holes
4-03-96	4302'-4310'	4 JSPF	32 holes
7-13-03	5210'-5216'	4 JSPF	24 holes
7-15-03	4718'-4728'	4 JSPF	40 holes

NEWFIELD

Monument Federal #11-9-9-16

674 FNL & 668 FWL

NWNW Section 9-T9S-R16E

Duchesne Co, Utah

API #43-013-31618; Lease #UTU-020254

ML 11/1/2010

Attachment E-2

SWD Federal #R-4-9-16

Spud Date: 6-4-08
Put on Production: 8-15-08

GL:5603' KB:5615'

SURFACE CASING

CSG SIZE: 8-5/8"
GRADE: K-55
WEIGHT: 24#
LENGTH: 7 jts (318.08')
DEPTH LANDED: 328.08'
HOLE SIZE: 12-1/4"
CEMENT DATA: To surface with 160 sx Class "G" cmt

PRODUCTION CASING

CSG SIZE: 5-1/2"
GRADE: K-55
WEIGHT: 17#
LENGTH: 136 jts 6220.27'
HOLE SIZE: 7-7/8"
CEMENT DATA: 300 sx Premlite II and 450 sx 50/50 Poz
CEMENT TOP AT: 46'

TUBING

SIZE/GRADE/WT: 2-7/8", J-55, 6.5#
NO. OF JOINTS: 194 jts (5961.58')
TUBING ANCHOR: 5973.58' KB
NO. OF JOINTS: 1 jt (31.46')
SEATING NIPPLE: 2-7/8" (1.10')
SN LANDED AT: 6007.74'
NO. OF JOINTS: 2 jts (62.88')
TOTAL STRING LENGTH: EOT @ 6072.17'

SUCKER RODS

POLISHED ROD: 1-1/2"x 26'
SUCKER RODS: 2-2' x 7/8" pony rods, 238- 7/8" scrapered rods, 4-1 ½" weight rods
PUMP SIZE: CDI 2 ½"x 1 ¾" x 21' RHAC pump w/sm plunger
STROKE LENGTH: 122"
PUMP SPEED, SPM: 4 SPM

Wellbore Diagram

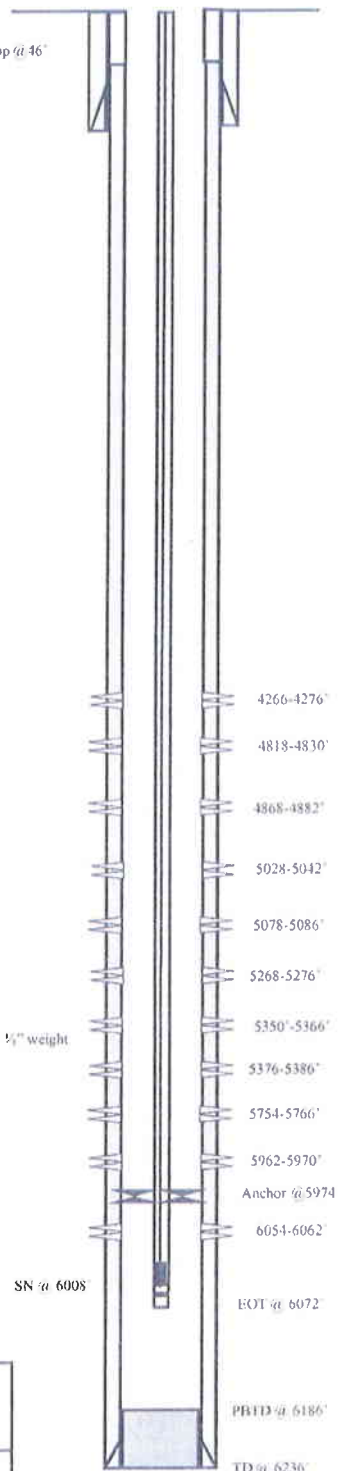

FRAC JOB

7-21-08 6054-6062' **Frac CP5 sds as follows:** Frac w/23,841#'s of 20/40 sand in 382 bbls of Lightning 17 fluid. Treat at an ave pressure of 2307 psi w/ ave rate of 23.2. ISIP 2024 psi.

7-21-08 5962-5970' **Frac CP4 sds as follows:** Frac w/25,330#'s of 20/40 sand in 374 bbls of Lightning 17 fluid. Treat w/ ave pressure of 2407 psi w/ ave rate of 22.9. ISIP 2269

7-21-08 5350-5366' **Frac LODC sds as follows:** Frac w/65,317#'s of 20/40 sand in 558 bbls of Lightning 17 fluid. Treated w/ ave pressure of 2133 psi w/ ave rate of 22.8 BPM. ISIP 2848 psi.

7-21-08 5268-5276' **Frac A1 sds as follows:** Frac w/24,872#'s of 20/40 sand in 359 bbls of Lightning 17 fluid. Treated w/ ave pressure of 2382 psi w/ ave rate of 23.0 BPM. ISIP 2247 psi.

7-21-08 5028-5042' **Frac B.5 & B1 sds as follows:** Frac 50,070#'s of 20/40 sand in 455 bbls of Lightning 17 fluid. Treated w/ ave pressure of 2137 psi w/ ave rate of 22.7 BPM. ISIP 2194 psi.

7-21-08 4818-4830' **Frac D1 & D2 sds as follows:** Frac 130,336#'s of 20/40 sand in 911 bbls of Lightning 17 fluid. Treated w/ ave pressure of 2239 psi w/ ave rate of 22.9 BPM. ISIP 2435 psi

7-21-08 4266-4276' **Frac GB2 sds as follows:** Frac 24,830#'s of 20/40 sand in 911 bbls of Lightning 17 fluid. Treated w/ ave pressure of 2239 psi w/ ave rate of 22.9 BPM. ISIP 2435 psi.

PERFORATION RECORD

4266-4276'	4 JSPF	40 holes
4818-4830'	4 JSPF	48 holes
4868-4882'	4 JSPF	56 holes
5028-5042'	4 JSPF	64 holes
5078-5086'	4 JSPF	32 holes
5268-5276'	4 JSPF	32 holes
5350-5366'	4 JSPF	64 holes
5376-5386'	4 JSPF	40 holes
5754-5766'	4 JSPF	48 holes
5962-5970'	4 JSPF	32 holes
6054-6062'	4 JSPF	32 holes

NEWFIELD

SWD Federal #R-4-9-16
2053' FSL & 2051' FEL
NW/SE Section 4-T9S-R16E
Duchesne Co, Utah
API #43-013-33763; Lease #UTU-77338

TT 9/22/08

ATTACHMENT E-3

South Wells Draw Fed #11-4-9-16

Spud Date: 10/21/98

Put on Production: 11/21/98
Put on Injection: 5/29/02

GL: 5734' KB: 5744'

Initial Production: 93 BOPD; 141 MCFD; 6 BWPD

Wellbore Diagram

SURFACE CASING

CSG SIZE: 8-5/8"

GRADE: J-55

WEIGHT:24#

DEPTH LANDED: 326'

HOLE SIZE:12-1/4"

CEMENT DATA: 140 sxs Premium cmt, est 6 bbls to surf. Cmt fell. Pump 6 bbl "G" cmt down 1" string. Est. 2 bbl to surface

PRODUCTION CASING

CSG SIZE: 5-1/2"

GRADE: J-55

WEIGHT: 15.5#

LENGTH: 137 jts. (6005')

SET AT: 6014' KB

HOLE SIZE: 7-7/8"

CEMENT DATA: 295 sxs Premium modified mixed & 310 sxs class G

CEMENT TOP AT: 484' per cement bond log(Schlumberger)

TUBING

SIZE/GRADE/WT.: 2-7/8" / J-55 / 6.5#

NO. OF JOINTS: 159 jts. (4718.39')

SEATING NIPPLE: 2-7/8" 1.10'

SN LANDED AT: 4728.39' KB

PACKER AT: 4732.49'

TOTAL STRING LENGTH: EOT @ 4836.69' KB

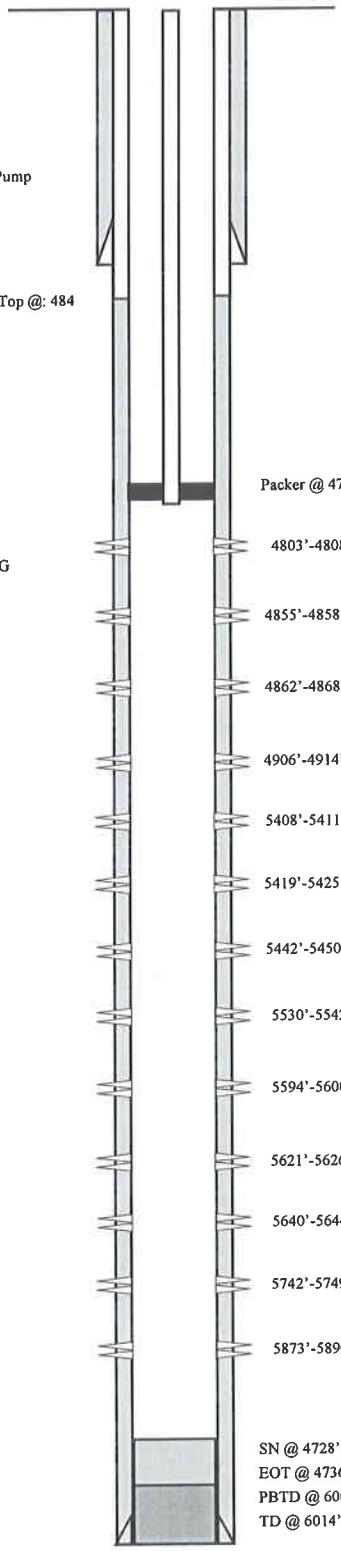

FRAC JOB

11/12/98 5742'-5890'	**Frac CP-0.5 & CP-2 sands as follows:** 120,312# 20/40 sand in 603 bbls Viking I-25 fluid. Treated @ avg press of 1650 psi w/avg rate of 35 BPM. ISIP: 2400 psi.
11/14/98 5408'-5425'	**Frac LODC sand as follows:** 84,000# 20/40 sand in 451 bbls Viking I-25 fluid. Treated @ avg press of 2500 psi w/avg rate of 33 BPM. Screened out to 8,300# w/8.6@ sand on perfs w/1332 gal left flush. Est 74,200# sand in perfs, sand left in casing. ISIP: 3350 psi.
11/17/98 4803'-4914'	**Frac D-S3, D-1 & D-2 sands as follows:** 92,438# 20/40 sand in 518 bbls Viking I-25 fluid. Treated @ avg press of 3000 psi w/avg rate of 34 BPM. ISIP: 3550 psi.
5/24/02	**Convert to injector.**
4/12/07	**5 Year MIT completed and submitted**

PERFORATION RECORD

11/11/98	5742'-5749'	4 JSPF	28 holes
11/11/98	5873'-5890'	4 JSPF	68 holes
11/13/98	5408'-5411'	4 JSPF	12 holes
11/13/98	5419'-5425'	4 JSPF	24 holes
11/16/98	4803'-4808'	4 JSPF	20 holes
11/16/98	4855'-4858'	4 JSPF	12 holes
11/16/98	4862'-4868'	4 JSPF	24 holes
11/16/98	4906'-4914'	4 JSPF	32 holes
5/22/02	5640'-5644'	4 JSPF	16 holes
5/22/02	5621'-5626'	4 JSPF	20 holes
5/22/02	5594'-5600'	4 JSPF	24 holes
5/22/02	5530'-5542'	4 JSPF	48 holes
5/22/02	5442'-5450'	4 JSPF	32 holes

NEWFIELD

South Wells Draw #11-4-9-16
2067 FSL & 1990 FWL
NESW Section 4-T9S-R16E
Duchesne Co, Utah
API #43-013-32104; Lease #UTU-77338

CR 4/18/07

Attachment E-4

SWD Fed #B-8-9-16

Spud Date: 06/11/08
Put on Production: 10/13/08

GL: 5852' KB: 5864'

SURFACE CASING

CSG SIZE: 8-5/8"
GRADE: J-55
WEIGHT: 24#
LENGTH: 7 jts (312.79')
DEPTH LANDED: 324.64'
HOLE SIZE: 12-1/4"
CEMENT DATA: 160 sxs Class "G" cmt, est 9 bbls cmt to surf.

PRODUCTION CASING

CSG SIZE: 5-1/2"
GRADE: J-55
WEIGHT: 15.5#
LENGTH: 137 jts (6316.75')
DEPTH LANDED: 6330'
HOLE SIZE: 7-7/8"
CEMENT DATA: 350 sx Premlite II and 450 sx 50/50 Poz
CEMENT TOP AT: 38'

TUBING

SIZE/GRADE/WT: 2-7/8" / J-55
NO. OF JOINTS: 157 jts (4872.21')
TUBING ANCHOR: 2.80@ 4884.21
NO. OF JOINTS: 1 jts (30.85')
SEATING NIPPLE: 2-7/8" (1.10')
SN LANDED AT: 4917.86
NO. OF JOINTS: 1 (30.85)
TOTAL STRING LENGTH: EOT @ 4952'

SUCKER RODS

POLISHED ROD: 1 ½" x 26' polished rod
SUCKER RODS: 191-7/8" guided (8 per), 4-1 ½" wt bars, 21k shear coupling
PUMP SIZE: 2 ½" x 2" x 24' RHBC CDI
STROKE LENGTH: 120'
PUMP SPEED, SPM: 5

Wellbore Diagram

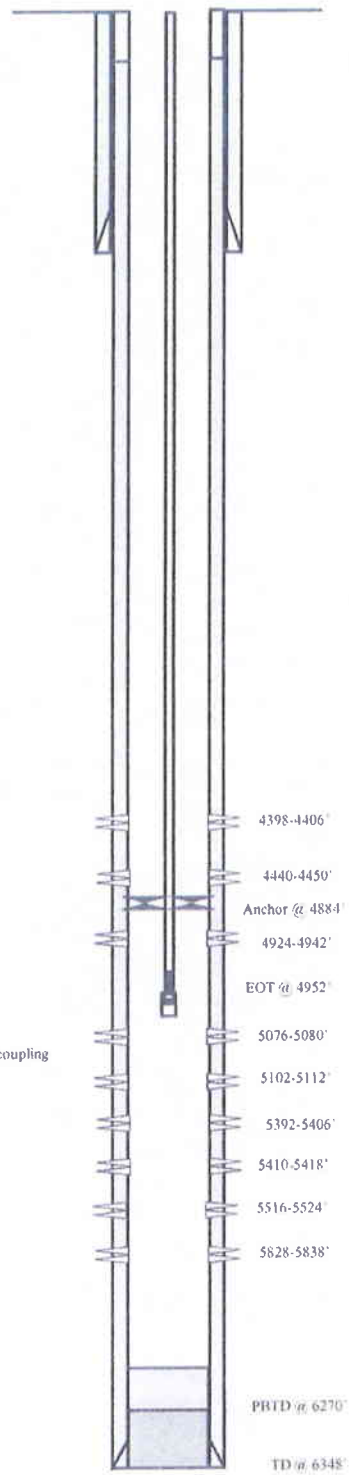

FRAC JOB

7/15/08 5828-5838' **Frac CP.5 sds as follows:**
24,700# 20/40 sand in 369 bbls of Lightning 17 fluid. Treated w/ ave pressure of 2765 psi @ ave rate of 23 BPM. ISIP 2282 psi. Actual flush: 5326 gals.

7/15/08 5516-5524 **Frac LODC sds as follows:**
25,258# 20/40 sand in 358 bbls of Lightning 17 fluid. Treated w/ ave pressure of 2103 psi @ ave rate of 23.1 BPM. ISIP 1740 psi. Actual flush: 5011 gals.

7/15/08 5392-5406 **Frac A1 sds as follows:**
100,294# 20/40 sand in 743 bbls of Lightning 17 fluid. Treated w/ ave pressure of 2210 psi @ ave rate of 23 BPM. ISIP 1740 psi. Actual flush: 4889 gals.

7/16/08 5076-5080' **Frac C sds as follows:**
59,951# 20/40 sand in 506 bbls of Lightning 17 fluid. Treated w/ ave pressure of 2103 psi @ ave rate of 23 BPM. ISIP 2180 psi. Actual flush: 4570 gals.

7/16/08 4924-4942' **Frac D1 sds as follows:**
128,411# 20/40 sand in 906 bbls of Lightning 17 fluid. Treated w/ ave pressure of 2326 psi @ ave rate of 25.6 BPM. ISIP 2411 psi. Actual flush: 4418 gals.

7/16/08 4398-4406' **Frac GB4 & GB6 sds as follows:**
99,112# 20/40 sand in 716 bbls of Lightning 17 fluid. Treated w/ ave pressure of 2003 psi @ ave rate of 25.7 BPM. ISIP 2008 psi. Actual flush: 4326 gals.

PERFORATION RECORD

4398-4406'	4 JSPF	32 holes
4440-4450'	4 JSPF	40 holes
4924-4942'	4 JSPF	72 holes
5076-5080'	4 JSPF	16holes
5102-5112'	4 JSPF	40 holes
5392-5406'	4 JSPF	56 holes
5410-5418'	4 JSPF	32 holes
5516-5524'	4 JSPF	32 holes
5828-5838'	4 JSPF	40 holes

NEWFIELD

SWD Fed #B-8-9-16
527' FNL & 2066' FEL
NWNE Section 8-T9S-R16E
Duchesne Co, Utah
API #43-013-33764; Lease #UTU-020255

TW 04/14/2011

Attachment E-5

South Wells Draw 16-5T-9-16

Spud Date: 4/11/03
Put on Production: 7/11/03
GL: 5810' KB: 5822'

Initial Production: 106 BOPD, 86 MCFD, 19 BWPD

SURFACE CASING

CSG SIZE: 8 5/8"
GRADE: J-55
WEIGHT: 24#
LENGTH: 7 jts (292.42')
DEPTH LANDED: 302.42' KB
HOLE SIZE: 12 1/4"
CEMENT DATA: 150 sxs Class "G" cmt, est 3.5 bbls cmt to surf

PRODUCTION CASING

CSG SIZE: 5 1/2"
GRADE: J-55
WEIGHT: 15.5#
LENGTH: 140 jts. (6246.18')
DEPTH LANDED: 6244.18' KB
HOLE SIZE: 7 7/8"
CEMENT DATA: 300 sxs Prem. Lite II mixed & 400 sxs 50/50 POZ
CEMENT TOP AT: Surface per CBL

TUBING

SIZE/GRADE/WT: 2 7/8" / J-55 / 6.5#
NO. OF JOINTS: 187 jts (5892.92')
TUBING ANCHOR: 5909.92' KB
NO. OF JOINTS: 2 jts (62.89')
SEATING NIPPLE: 2 7/8" (1.10')
SN LANDED AT: 5978.27' KB
NO. OF JOINTS: 2 jts (63.00')
TOTAL STRING LENGTH: EOT @ 6042.81' W/ KB

SUCKER RODS

POLISHED ROD: 1 1/2" x 22' SM
SUCKER RODS: 6- 1 1/2" weight rods, 10- 3/4" scrapered rods, 122- 3/4" plain rods, 99- 3/4" scrapered rods, 1- 6', & 1- 2' x 3/4" pony rods
PUMP SIZE: 2 1/2" x 1 1/2" x 10' x 14' RHAC
STROKE LENGTH: 72"
PUMP SPEED: SPM: 5 SPM

Wellbore Diagram

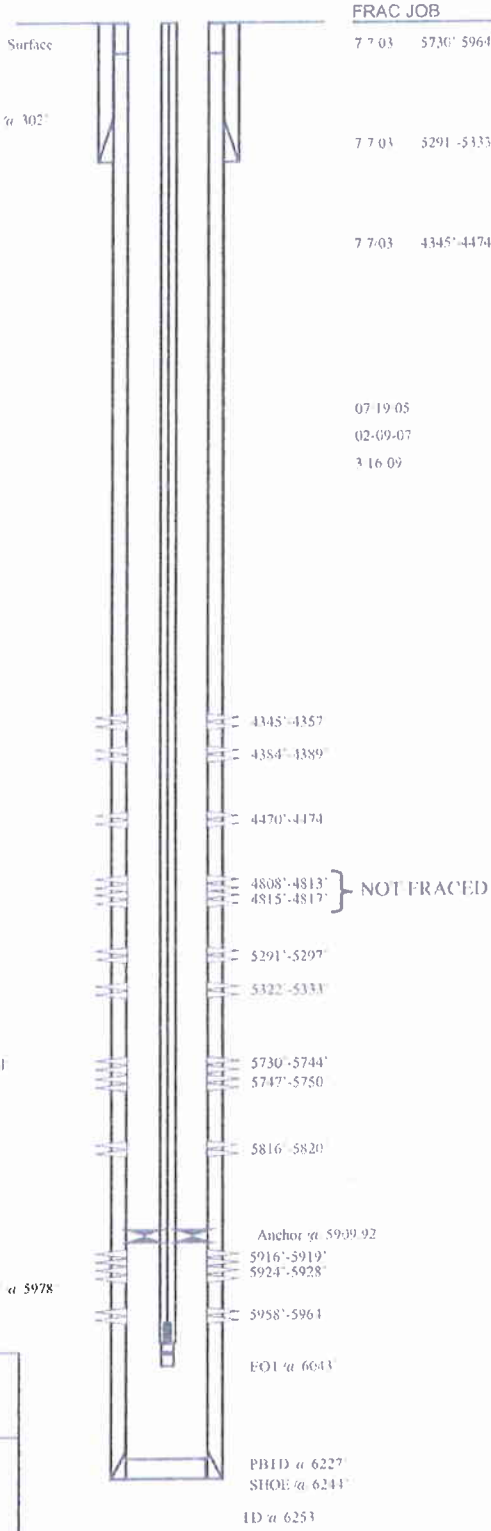

FRAC JOB

7/7/03	5730'-5964'	**Frac CP.5 CP2, CP3, & CP4 sands as follows:** 89,016# 20/40 sand in 697 Bbls Viking I-25 fluid. Treated @ avg. press of 1731 psi w/ avg rate of 24.5 BPM. ISIP: 1983 psi. Calc flush: 5728 gal. Actual flush: 5628 gal
7/7/03	5291'-5333'	**Frac A1 & A3 sands as follows:** 52,556# 20/40 sand in 461 Bbls Viking I-25 fluid. Treated @ avg. press of 2040 psi w/ avg rate of 24.5 BPM. ISIP: 2270 psi. Calc flush: 5289 gal. Actual flush: 5208 gal
7/7/03	4345'-4474'	**Frac GB4, GB6, & PB7 sands as follows:** 80,766# 20/40 sand in 576 Bbls Viking I-25 fluid. Treated @ avg. press of 1950 psi w/ avg rate of 24.7 BPM. ISIP: 2125 psi. Calc flush: 4343 gal. Actual flush: 4242 gal
07/19/05		**Pump change.** Update tubing and rod details
02-09-07		**Tubing Leak:** Updated rod and tubing detail
3/16/09		Pump Change. Updated r & t details

PERFORATION RECORD

7/3/03	5958'-5964'	4 JSPF	24 holes
7/3/03	5924'-5928'	4 JSPF	16 holes
7/3/03	5916'-5919'	4 JSPF	12 holes
7/3/03	5816'-5820'	4 JSPF	16 holes
7/3/03	5747'-5750'	4 JSPF	12 holes
7/3/03	5730'-5744'	4 JSPF	56 holes
7/7/03	5322'-5333'	4 JSPF	44 holes
7/7/03	5291'-5297'	4 JSPF	24 holes
7/7/03	4815'-4817'	4 JSPF	8 holes
7/7/03	4808'-4813'	4 JSPF	20 holes
7/7/03	4470'-4474'	4 JSPF	16 holes
7/7/03	4384'-4389'	4 JSPF	20 holes
7/7/03	4345'-4357'	4 JSPF	48 holes

NEWFIELD

South Wells Draw 16-5T-9-16
897' FSL & 823' FEL
SE/SE Section 5-T9S-R16E
Duchesne Co, Utah
API #43-013-32433 ; Lease #UTU-73086

DL 5/1/09

Attachment E-6

South Wells Draw U-5-9-16

Spud Date: 3/26/2009
Put on Production: 6/4/2009

GL: 5758' KB: 5770'

Wellbore Diagram

SURFACE CASING

CSG SIZE 8-5/8"
GRADE J-55
WEIGHT: 24#
LENGTH: 8 jts (312')
DEPTH LANDED 324' KB
HOLE SIZE: 12-1/4"
CEMENT DATA: 160 sx class 'G' cmt

PRODUCTION CASING

CSG SIZE: 5-1/2"
GRADE: J-55
WEIGHT 15.5#
LENGTH 154 jts (6273')
HOLE SIZE: 7-7/8"
DEPTH LANDED: 6286.08'
CEMENT DATA: 300 sx Prem. Lite and 400 sx 50/50 poz
CEMENT TOP AT 32'

TUBING

SIZE/GRADE/WT.: 2-7/8" / J-55 / 6.5#
NO. OF JOINTS 188 jts (5862')
TUBING ANCHOR: 5874' KB
NO. OF JOINTS 1 jts (31.6')
SEATING NIPPLE: 2-7/8" (1.1')
SN LANDED AT: 5909' KB
NO. OF JOINTS 2 jts (63.0')
TOTAL STRING LENGTH: EOT @ 5973'

SUCKER RODS

POLISHED ROD: 1 ½" x 30'
SUCKER RODS: 1 - 2' x 7/8" pony rod, 231 - 7/8" guide rod (8 per)
4 - 1 ½" weight bars
PUMP SIZE: 2 ½" x 1 ¾" x 20' RHAC
STROKE LENGTH: 120"
PUMP SPEED, SPM: 4

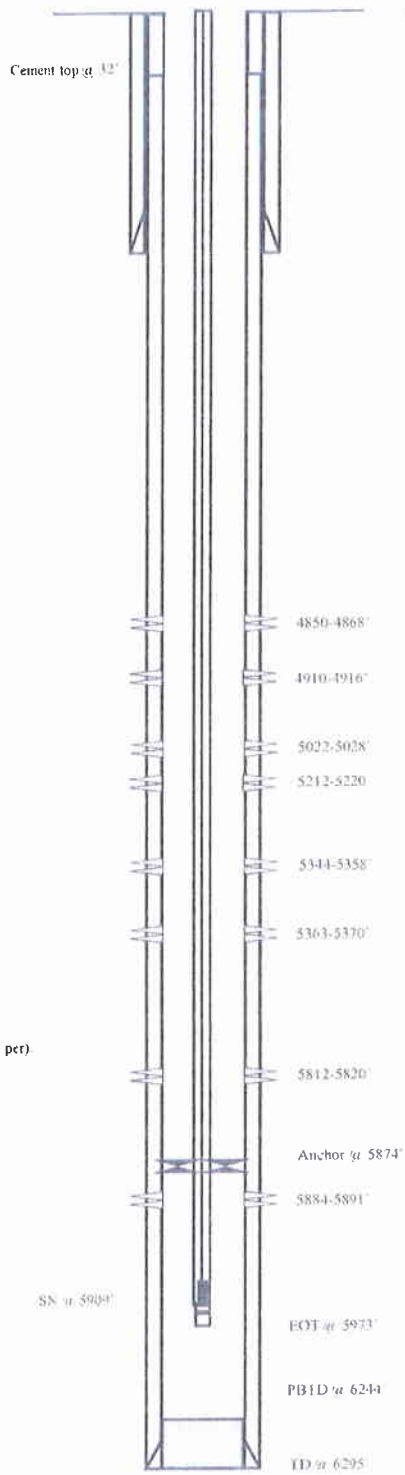

FRAC JOB

6-5-09	5884-5891'	**Frac CP2 sands as follows:** Frac with 19,931# 20/40 sand in 340 total bbls inc Lightning 17 fluid
6-5-09	5812-5820'	**Frac CP1 sands as follows:** Frac with 24,805# 20/40 sand in 207 bbls of Lightning 17 fluid.
6-5-09	5344-5370'	**Frac A1 sands as follows:** Frac with 71,697# 20/40 sand in 620 total bbls inc Lightning 17 fluid.
6-5-09	5212-5220'	**Frac B2 sands as follows:** Frac with 24,698# 20/40 sand in 207 bbls of Lightning 17 fluid
6-5-09	5022-5028'	**Frac D3 sands as follows:** Frac with 25,367# 20/40 sand in 165 bbls of Lightning 17 fluid
6-5-09	4850-4916'	**Frac D1 & DS3 sands as follows:** Frac with 97,338# 20/40 sand in 597 bbls of Lightning 17 fluid

PERFORATION RECORD

5884-5891'	4 JSPF	28 holes
5812-5820'	4 JSPF	32 holes
5363-5370'	4 JSPF	28 holes
5344-5358'	4 JSPF	56 holes
5212-5220'	4 JSPF	32 holes
5022-5028'	4 JSPF	24 holes
4910-4916'	4 JSPF	24 holes
4850-4868'	4 JSPF	72 holes

NEWFIELD

S Wells Draw U-5-9-16

697' FNL & 647' FWL NW/NW

Section 5-T9S-R16E

Duchesne Co, Utah

API # 43-013-33981; Lease # UTU-73086

LCS 9-22-09

ATTACHMENT E-7

South Wells Draw 10-4-9-16

Spud Date: 10/28/99
Put on Production: 11/26/99
GL: 5656' KB: 5666'

Initial Production:
44 BOPD, 59 MCFD 2 BWPD

Injection Wellbore Diagram

SURFACE CASING

CSG SIZE: 8-5/8"
GRADE: J-55
WEIGHT: 24#
LENGTH: 7 jts (325.47')
DEPTH LANDED: 323.17'
HOLE SIZE: 12-1/4"
CEMENT DATA: 141 sx Class "G" w/2% CC and 1/4#/sk flocele.

PRODUCTION CASING

CSG SIZE: 5-1/2"
GRADE: J-55 and N-80
WEIGHT: 15.5#
LENGTH: 132 jts (5568.93')
DEPTH LANDED : 5566.63'
HOLE SIZE: 7-7/8"
CEMENT DATA: 265 sx Premium Lite II Modified; and 305 sx 50/50 Poz w/3% KCl, 1/4#/sk cello-flake, 2% gel, .3% SM.
CEMENT TOP: 640'

TUBING

SIZE/GRADE/WT: 2-7/8" / 6.5# / M-50
NO. OF JOINTS: 156 jts (4835.7')
SEATING NIPPLE: 1.10'
SN LANDED AT: 4845.7'
CE @ 4850.09'
TOTAL STRING LENGTH EOT @: 4854' w/ 10' KB

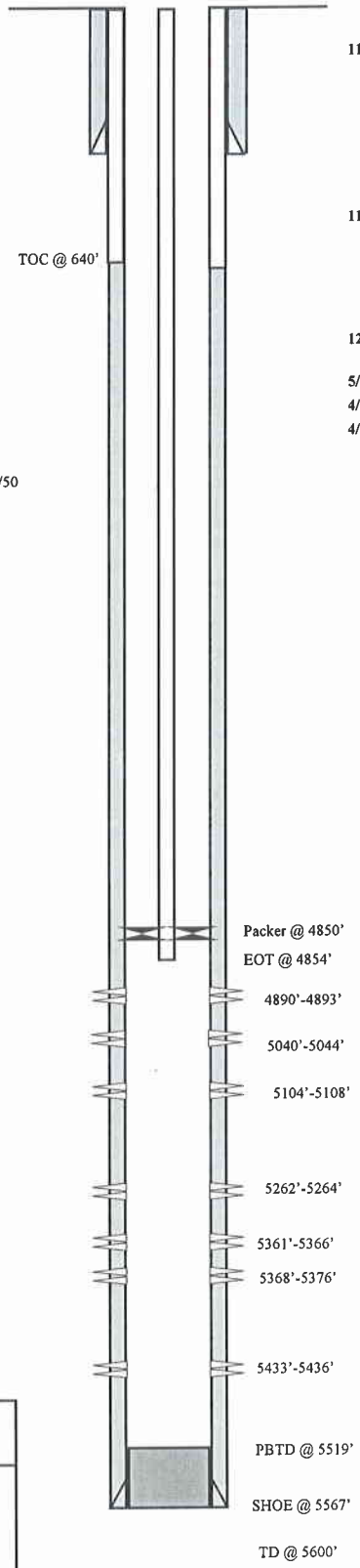

FRAC JOB

11-20-99	5262'-5436'	**Frac A/LDC sand as follows:** 102,200# 20/40 sand in 602 bbls Boragel fluid. Breakdown @ 2070 psi. Treated w/avg press of 2521 psi w/avg rate of 35.9 BPM. ISIP-3125 psi, 5min 2972 psi. Left pressure on well. Re-set plug; released pressure off well. Flowback 2 bbls fluid.
11-20-99	4890'-5108'	**Frac C/B sand as follows:** 99,900# 20/40 sand in 547 bbls 30# Boragel. Breakdown @ 1888 psi. Treated w/avg press of 2058 psi w/avg rate of 31.5 BPM. ISIP-2000 psi, 5 min 1938 psi. Flowback on 12/64" ck for 2-1/2 hrs & died.
12/13/02		**Parted rods.** Update rod and tubing detail.
5/27/09		**Pump Change.** Updated rod & tubing details.
4/19/10		**Convert to Injection Well**
4/21/10		**MIT Completed – tbg detail updated**

PERFORATION RECORD

11-20-99	5262'-5264'	4 JSPF	8 holes
11-20-99	5361'-5366'	4 JSPF	20 holes
11-20-99	5368'-5376'	4 JSPF	32 holes
11-20-99	5433'-5436'	4 JSPF	12 holes
11-20-99	4890'-4893'	4 JSPF	12 holes
11-20-99	5040'-5044'	4 JSPF	16 holes
11-20-99	5104'-5108'	4 JSPF	16 holes

NEWFIELD

South Wells Draw 10-4-9-16

2068' FSL and 2042' FEL

NWSE Section 4-T9S-R16E

Duchesne Co, Utah

API #43-013-32103; Lease #UTU-77338

LCN 04-23-10

ATTACHMENT E-8

South Wells Draw 14A-4-9-16

Spud Date: 1/17/2000
Put on Production: 7/13/2000
GL: 5711' KB: 5721'

Initial Production: 75 BOPD, 90 MCFD, 4 BWPD

SURFACE CASING

CSG SIZE: 8-5/8"
GRADE: J-55
WEIGHT: 24#
LENGTH: 7 jts. (305.07')
DEPTH LANDED: 316'
HOLE SIZE:12-1/4"
CEMENT DATA: 141 sxs Class "G" cmt, est 5 bbls cmt to surf

PRODUCTION CASING

CSG SIZE: 5-1/2"
GRADE: J-55 & N-80
WEIGHT: 15.5# & 17.0#
LENGTH: 144 jts. (5861.96')
DEPTH LANDED: 5859.76'
HOLE SIZE: 7-7/8"
CEMENT DATA: 280 sk Prem. Lite II mixed & 400 sxs 50/50 POZ.
CEMENT TOP AT: 816'

TUBING

SIZE/GRADE/WT.: 2-7/8" / J-55 / 6.5#
NO. OF JOINTS: 153 jts (4757')
SEATING NIPPLE: 2-7/8" (1.10')
SN LANDED AT: 4767'
CE @ 4771.38'
TOTAL STRING LENGTH: EOT @ 4776' w/ 10' KB

Injection Wellbore Diagram

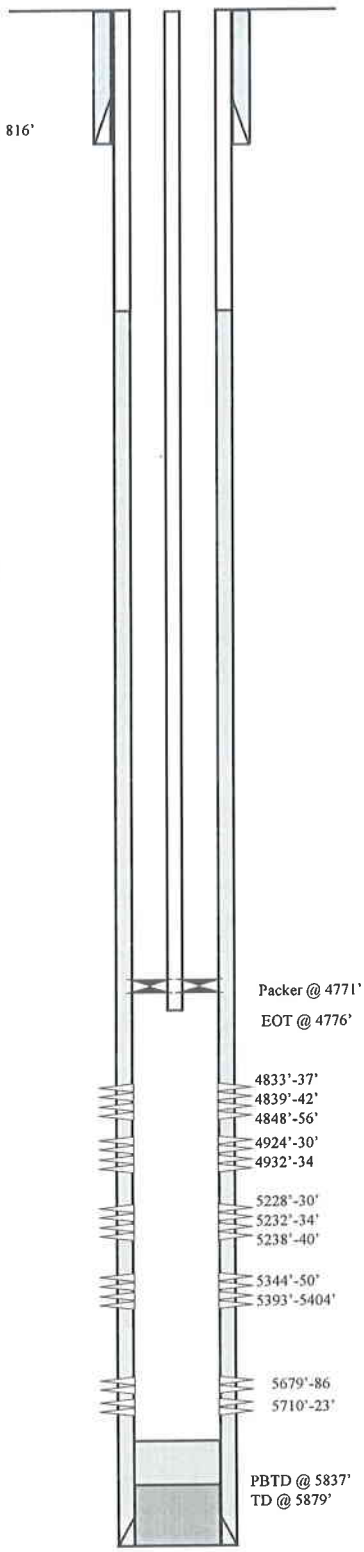

FRAC JOB

2/15/00	5679'-5723'	**Frac CP sand as follows:** 83,359# 20/40 sand in 487 bbls Viking I-25 fluid. Perfs broke down @ 3656 psi. Treated @ avg press of 1700 psi w/avg rate of 30 BPM. ISIP 2520 psi, 5 min 2392 psi.
2/15/00	5228'-5404'	**Frac A/LDC sand as follows:** 101,132# 20/40 sand in 578 bbls Viking I-25 fluid. Perfs broke down @ 3480 psi. Treated @ avg press of 2100 psi w/avg rate of 34 BPM. Had several small breaks & a large pressure break when bringing pumps up to rate. With approx 40 bbls left to flush, pressure was near maximum. Rate was decreased 25 BPM, then pressure dropped off approx 2000 psi & a full flush was achieved. ISIP 2380 psi, 5 min 2170 psi
2/15/00	4833'-4934'	**Frac C/D sand as follows:** 64,257# 20/40 sand in 332 bbls Viking I-25 fluid. Perfs broke down @ 2620 psi. Treated @ avg press of 2000 psi w/avg rate of 34 BPM. With 7# sand on perfs, pressure increased rapidly. Rate was increased & sand cut @ blender @ 8-1/2# but maximum pressure was reached before any flush water was pumped. Screened out with approx 38,257# sand in perfs and 25,000# sand left in csg.
03-25-10		**Convert to Injection well**
3-31-10		**MIT completed – tbg detail updated**

PERFORATION RECORD

2/15/00	5710'-5723'	4 JSPF	52 holes
2/15/00	5679'-5686'	4 JSPF	28 holes
2/15/00	5393'-5404'	4 JSPF	44 holes
2/15/00	5344'-5350'	4 JSPF	24 holes
2/15/00	5238'-5240'	4 JSPF	8 holes
2/15/00	5228'-5230'	4 JSPF	8 holes
2/15/00	5232'-5234'	4 JSPF	8 holes
2/16/00	4932'-4934'	4 JSPF	8 holes
2/16/00	4924'-4930'	4 JSPF	24 holes
2/16/00	4848'-4856'	4 JSPF	32 holes
2/16/00	4833'-4837'	4 JSPF	16 holes
2/16/00	4839'-4842'	4 JSPF	12 holes

NEWFIELD

South Wells Draw 14A-4-9-16
731' FSL & 2030' FWL
SE/SW Section 4-T9S-R16E
Duchesne Co, Utah
API #43-013-32107; Lease #UTU-79832

LCN 04-05-10

Attachment E-9

South Wells Draw X-4-9-16

Spud Date: 4/2/2009
Put on Production:6/1/2009

GL: 5715' KB: 5727'

Wellbore Diagram

SURFACE CASING

CSG SIZE: 8-5/8"
GRADE: J-55
WEIGHT: 24#
LENGTH: 8 jts (313')
DEPTH LANDED: 325' KB
HOLE SIZE: 12-1/4"
CEMENT DATA: 160 sx class "G" cmt

PRODUCTION CASING

CSG SIZE: 5-1/2"
GRADE: J-55
WEIGHT: 15.5#
LENGTH: 169 jts (6172')
HOLE SIZE: 7-7/8"
DEPTH LANDED: 6222.70'
CEMENT DATA: 280 sx Prem. Lite and 400 sx 50/50 poz
CEMENT TOP AT: 28'

TUBING

SIZE/GRADE/WT.: 2-7/8" / J-55 / 6.5#
NO. OF JOINTS: 190 jts (5889')
TUBING ANCHOR: 5901' KB
NO. OF JOINTS: 1 jt (30.9')
SEATING NIPPLE: 2-7/8" (1.1')
SN LANDED AT: 5935' KB
NO. OF JOINTS: 2 jts (62.4')
TOTAL STRING LENGTH: EOT @ 5999'

SUCKER RODS

POLISHED ROD: 1 ½" x 26'
SUCKER RODS: 1 - 2' x 7/8"; 1 - 4' x 7/8"; 1 - 8' x 7/8" pony rods, 232 - 7/8" guided rods (8 per). 4-1 ½" weight bars
PUMP SIZE: 2 ½" x 1 ¾" x 20' RHAC rod pump
STROKE LENGTH: 144"
PUMP SPEED, SPM: 5

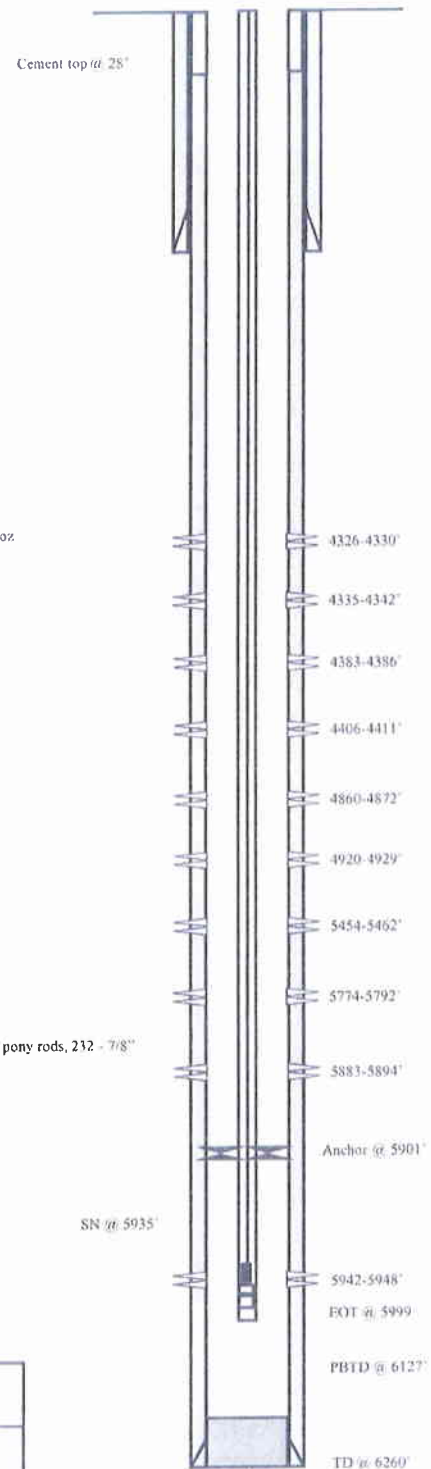

FRAC JOB

6-10-09	5883-5948'	**Frac CP3 & CP4 sands as follows:** Frac with 29,550# of 20/40 sand in 249 bbls of Lightning 17 fluid.
6-10-09	5774-5792'	**Frac CP2 sands as follows:** Frac with 65,152# 20/40 sand in 395 bbls of Lightning 17 fluid.
6-10-09	5454-5462'	**Frac LODC sands as follows:** Frac with 30,549# 20/40 sand in 244 bbls of Lightning 17 fluid.
6-10-09	4860-4929'	**Frac D1 & D2 sands as follows:** Frac with 55,172# 20/40 sand in 341 bbls of Lightning 17 fluid.
6-10-09	4326-4411'	**Frac GB2 & GB4 sands as follows:** Frac with 55,292# 20/40 sand in 346 bbls of Lightning 17 fluid.

PERFORATION RECORD

5942-5948'	4 JSPF	24 holes
5883-5894'	4 JSPF	44 holes
5774-5792'	4 JSPF	72 holes
5454-5462'	4 JSPF	32 holes
4920-4929'	4 JSPF	36 holes
4860-4872'	4 JSPF	48 holes
4406-4411'	4 JSPF	20 holes
4383-4386'	4 JSPF	12 holes
4335-4342'	4 JSPF	28 holes
4326-4330'	4 JSPF	16 holes

NEWFIELD

South Wells Draw X-4-9-16

730' FSL & 2044' FWL SE/SW

Section 4-T9S-R16E

Duchesne Co, Utah

API # 43-013-33880, Lease # UTU- 64379

LCN 9.22.09

Attachment E-10

WELLS DRAW FED. F-4-9-16

Spud Date: 12/02/07
Put on Production: 03/28/08

GL: 5725' KB: 5737'

Initial Production: BOPD, MCFD, BWPD

Wellbore Diagram

SURFACE CASING

CSG SIZE: 8-5/8"
GRADE: J-55
WEIGHT: 24#
LENGTH: 7 jts. (311.36')
DEPTH LANDED: 323.21' KB
HOLE SIZE:12-1/4"
CEMENT DATA:1- 160, sxs Class "G" cmt, est 7 bbls cmt to surf.

PRODUCTION CASING

CSG SIZE: 5-1/2"
GRADE: J-55
WEIGHT: 15.5#
LENGTH: 149 jts. (6423.72')
DEPTH LANDED: 6436.97' KB
HOLE SIZE: 7-7/8"
CEMENT DATA: 350 sxs Prem. Lite II mixed & 450 sxs 50/50 POZ.
CEMENT TOP: 24'

TUBING

SIZE/GRADE/WT.: 2-7/8" / J-55 / 6.5#
NO. OF JOINTS: 183 jts (5746.09')
TUBING ANCHOR: 5758.09' KB
NO. OF JOINTS: 2 jts (62.83')
SEATING NIPPLE: 2-7/8" (1.10')
SN LANDED AT: 5823.72' KB
NO. OF JOINTS: 1jts (31.40')
NO. OF JOINTS: 3jts (94.38')
TOTAL STRING LENGTH: EOT @ 5956.87' KB

SUCKER RODS

POLISHED ROD: 1-1/2" x 26' SM polished rods
SUCKER RODS: 1-2, 1-4', X 7/8" pony rods, 227-7/8" scrapered rods, 4-1 ½" weight bars
PUMP SIZE: CDI 2-1/2" x 1-3/4" x 20' RHAC
STROKE LENGTH: 168"
PUMP SPEED, 5 SPM

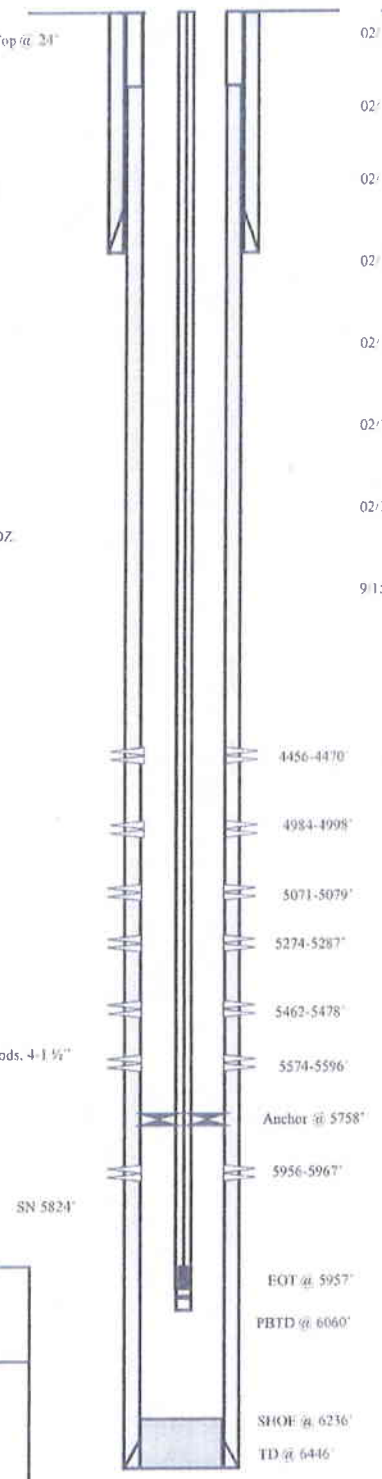

FRAC JOB

02/19/08	5956-5967'	**Frac CP2 sands as follows:** 39868# 20/40 sand in 430 bbls Lightning 17 frac fluid. Treated @ avg press of 2155 psi w/avg rate of 23.2 BPM. ISIP 2179 psi
02/19/08	5574-5596'	**Frac LODC sands as follows:** 129922# 20/40 sand in 928 bbl Lightning 17 frac fluid. Treated @ avg press of 2222 psi w/avg rate of 23.1 BPM. ISIP 2820 psi
02/19/08	5462-5478'	**Frac A3 sands as follows:** 129469# 20/40 sand in 928 bbls Lightning 17 frac fluid. Treated @ avg press of 2279 psi w/avg rate of 23.6 BPM. ISIP 2427 psi
02/19/08	5274-5287'	**Frac B2 sands as follows:** 84474# 20/40 sand in 657 bbls Lightning 17 frac fluid. Treated @ avg press of 2000 psi w/avg rate of 23.2 BPM. ISIP 2091 psi
02/19/08	5071-5079'	**Frac D3 sands as follows:** 39739# 20/40 sand in 412 bbls Lightning 17 frac fluid. Treated @ avg press of 2316 psi w/avg rate of 23.1 BPM. ISIP 1985 psi
02/19/08	4984-4998'	**Frac D1 sands as follows:** 115141# 20/40 sand in 842 bbls Lightning 17 frac fluid. Treated @ avg press of 1986 psi w/avg rate of 23.2 BPM. ISIP 2261 psi
02/19/08	4456-4470'	**Frac GB4 sands as follows:** 68527# 20/40 sand in 589 bbls Lightning 17 frac fluid. Treated @ avg press of 1880 psi w/avg rate of 23.3 BPM. ISIP 2015 psi
9/15/2010		Pump change. Update rod and tubing details

PERFORATION RECORD

5956-5967'	4 JSPF	44 holes
5574-5596'	4 JSPF	88 holes
5462-5478'	4 JSPF	64 holes
5274-5287'	4 JSPF	52 holes
5071-5079'	4 JSPF	32 holes
4984-4998'	4 JSPF	56 holes
4456-4470'	4 JSPF	56 holes

NEWFIELD

WELLS DRAW FED. F-4-9-16

612'FNL & 514' FEL
NE/NE Section 5, T9S, R16E
1407'FNL & 283' FWL
NW/NW Section 4-T9S-R16E
Duchesne Co, Utah
API #43-013-33517; Lease # UTU-30096

CB 2 28 2011

ATTACHMENT E-11

WELLS DRAW FED. G-4-9-16

Spud Date: 08/16/07
Put on Production: 10/04/07

GL: 5719' KB: 5731'

Initial Production: BOPD, MCFD, BWPD

SURFACE CASING

CSG SIZE: 8-5/8"
GRADE: J-55
WEIGHT: 24#
LENGTH: 7 jts. (296.61')
DEPTH LANDED: 308.46' KB
HOLE SIZE:12-1/4"
CEMENT DATA:1- 160, sxs Class "G" cmt, est 5 bbls cmt to surf.

PRODUCTION CASING

CSG SIZE: 5-1/2"
GRADE: J-55
WEIGHT: 15.5#
LENGTH: 162 jts. (6386.28')
DEPTH LANDED: 6386.03' KB
HOLE SIZE: 7-7/8"
CEMENT DATA: 350 sxs Prem. Lite II mixed & 480 sxs 50/50 POZ.
CEMENT TOP: 120'

TUBING

SIZE/GRADE/WT.: 2-7/8" / J-55 / 6.5#
NO. OF JOINTS: 175 jts (5399.99')
TUBING ANCHOR: 5411.99' KB
NO. OF JOINTS: 1 jts (30.73')
SEATING NIPPLE: 2-7/8" (1.10')
SN LANDED AT: 5445.52' KB
NO. OF JOINTS: 2 jts (61.53')
2 7/8 NC (.45)
TOTAL STRING LENGTH: EOT @ 5508.60' KB

SUCKER RODS

POLISHED ROD: 1-1/2" x 26' SM polished rods
SUCKER RODS: 4' x 7/8" pony rod, 213-7/8" scrapered rods, 4- 1 ½" weight bars
PUMP SIZE: CDI 2-1/2" x 1-3/4" x 16x 20' 'RHAC pump 175" SL
STROKE LENGTH: 122"
PUMP SPEED, 5 SPM:

Wellbore Diagram

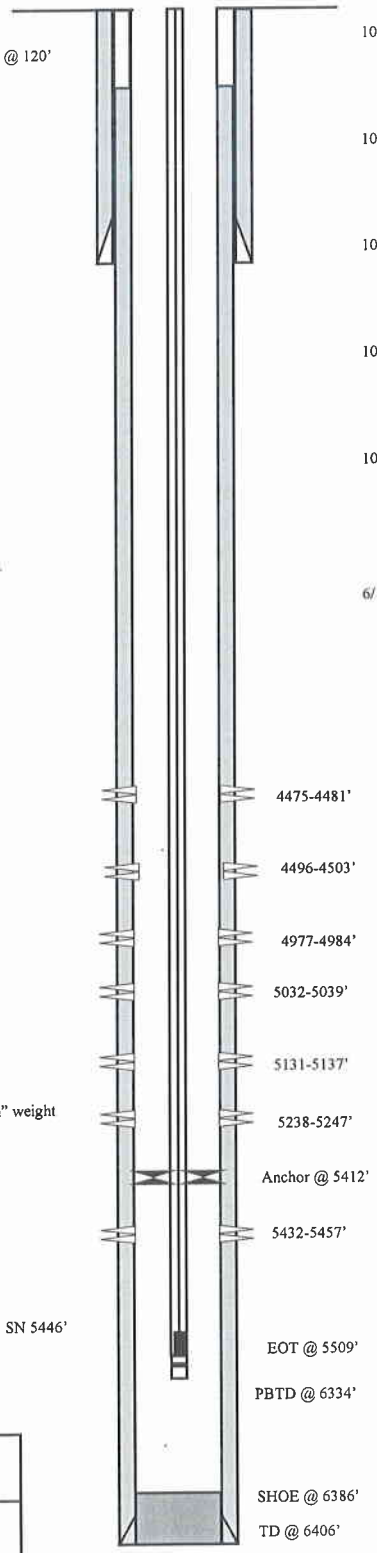

FRAC JOB

10/1/07	5649-5658'	**Frac A1 sands as follows:** 105895# 20/40 sand in 805 bbls Lightning 17 frac fluid. Treated @ avg press of 1932 psi w/avg rate of 24.7 BPM. ISIP 2103 psi. Calc flush: 5647 gal. Actual flush: 4956 gal.
10/1/07	5236-5272'	**Frac B1 sands as follows:** 25043# 20/40 sand in 368 bbl Lightning 17 frac fluid. Treated @ avg press of 1845 psi w/avg rate of 24.7 BPM. ISIP 1852 psi. Calc flush: 5234 gal. Actual flush: 4788 gal.
10/1/07	5131-5137'	**Frac C sands as follows:** 15827# 20/40 sand in 281 bbls Lightning 17 frac fluid. Treated @ avg press of 2403 psi w/avg rate of 24.8 BPM. ISIP 2515 psi. Calc flush: 5129 gal. Actual flush: 4662 gal.
10/107	4977-5039'	**Frac D2 & D1 sands as follows:** 66384# 20/40 sand in 544 bbls Lightning 17 frac fluid. Treated @ avg press of 2161 psi w/avg rate of 24.7 BPM. ISIP 2193 psi. Calc flush: 4975 gal. Actual flush: 4452 gal.
10/1/07	4475-4503'	**Frac GB6 sands as follows:** 32962# 20/40 sand in 357 bbls Lightning 17 frac fluid. Treated @ avg press of 1760 psi w/avg rate of 24.8 BPM. ISIP 1916 psi. Calc flush: 4473 gal. Actual flush: 4368 gal.
6/17/08		parted rods. Updated rod and tubing detail.

PERFORATION RECORD

5432-5457'	4 JSPF	100 holes
5238-5247'	4 JSPF	36 holes
5131-5137'	4 JSPF	24 holes
5032-5039'	4 JSPF	28 holes
4977-4984'	4 JSPF	28 holes
4496-4503'	4 JSPF	28 holes
4475-4481'	4 JSPF	24 holes

NEWFIELD

WELLS DRAW FED. G-4-9-16

1994'FNL & 1964' FWL
~~SW~~NW Section 4-T9S-R16E
SE
Duchesne Co, Utah
API #43-013-33518; Lease # UTU-30096

EL 6/17/08

ATTACHMENT E-12

Wells Draw H-4-9-16

Spud Date: 6/3/2009
Put on Production: 7/9/2009

GL: 5720' KB: 5732'

Wellbore Diagram

SURFACE CASING

CSG SIZE: 8-5/8"
GRADE: J-55
WEIGHT: 24#
LENGTH: 8 jts (310.8')
DEPTH LANDED: 322.65' KB
HOLE SIZE: 12-1/4"
CEMENT DATA: 160 sx class 'g' cmt

PRODUCTION CASING

CSG SIZE: 5-1/2"
GRADE: J-55
WEIGHT: 15.5#
LENGTH: 173 jts (6623.21')
DEPTH LANDED: 6402.50'
HOLE SIZE: 7-7/8"
CEMENT DATA: 280 sx primlite and 400 sx 50/50 poz
CEMENT TOP AT: 46'

TUBING

SIZE/GRADE/WT.: 2-7/8" / J-55
NO. OF JOINTS: 193 jts (6000')
TUBING ANCHOR: 6003' KB
NO. OF JOINTS: 1 jt (30.9')
SEATING NIPPLE: 2-7/8" (1.10')
SN LANDED AT: 6035' KB
NO. OF JOINTS: 3 jts (6164')
TOTAL STRING LENGTH: EOT @ 6165'

SUCKER RODS

POLISHED ROD: 1 ½" x 26'
SUCKER RODS:
PUMP SIZE: 2-1/2" x 1-3/4" x 20' x 24' RHAC pump
STROKE LENGTH: 144"
PUMP SPEED, SPM: 4

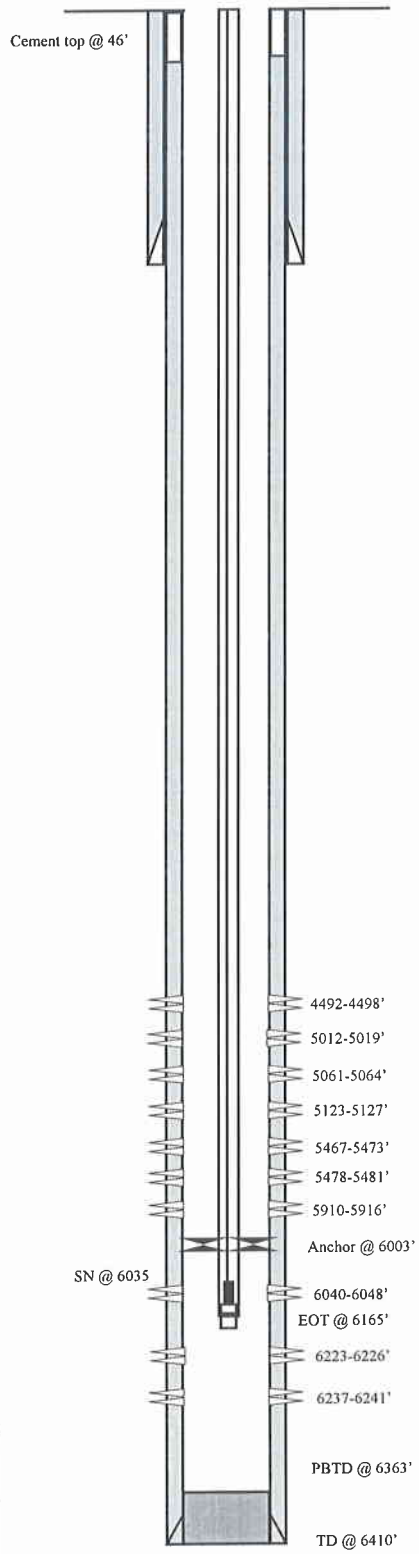

FRAC JOB

7/1/2009 6223-6241' RU BJ & frac CP5 sds as follows:
19,839# sand in 358 bbls of fluid. Treated @ ave pressure of 2362 w/ ave rate of 27 bpm w/ 6 ppg of sand. ISIP was 2047 w/ .77FG. 5 min was 1894. 10 min was 1841. 15 min was 1801.

7/1/2009 6040-6048' RU BJ & frac CP2 sds as follows:
30,171# sand in 430 bbls of fluid. Treated @ ave pressure of 2400 w/ ave rate of 27 bpm w/ 6 ppg of sand. ISIP was 2039 w/ .78FG. 5 min was 1913. 10 min was 1878. 15 min was 1855.

7/1/2009 5910-5916' RU BJ & frac CP.5 sds as follows:
14,995# sand in 304 bbls of fluid. Treated @ ave pressure of 2396 w/ ave rate of 16 bpm w/ 6 ppg of sand. ISIP was 2235 w/ .82FG. 5 min was 2101. 10 min was 2396. 15 min was 2000.

7/2/2009 5467-5481' RU BJ & frac A1 sds as follows:
45,742# sand in 460 bbls fluid. Treated @ ave pressure of 2598 w/ ave rate of 27 bpm w/ 8 ppg of sand. ISIP was 2331 w/ .87FG. 5 min was 2177. 10 min was 2064. 15 min was 1991.

7/2/2009 5012-5127' RU BJ & frac D sds as follows:
91,195# sand in 703 bbls fluid. Techna Hib chemical @ 4% by volume. Treated @ ave pressure of 2632 w/ ave rate of 35 bpm w/ 8 ppg of sand. Spot 12 bbls of 15% HCL acid in flush for next stage. ISIP was 2309 w/ .90FG. 5 min was 2190. 10 min was 2176. 15 min was 2132.

7/2/2009 4492-4498' RU BJ & frac GB4 sds as follows:
18,223# 20/40 sand in 301 bbls fluid. Treated @ ave pressure of 2776 w/ ave rate of 22 bpm w/ 6 ppg of sand. ISIP was 2487 w/ 1.0FG. 5 min was 2087. 10 min was 1938. 15 min was 1845.

PERFORATION RECORD

6/26/09	6237-6241'	3 JSPF	12 holes
6/26/09	6223-6226'	3 JSPF	9 holes
6/26/09	6040-6048'	3 JSPF	24 holes
6/26/09	5910-5916'	3 JSPF	18 holes
6/26/09	5478-5481'	3 JSPF	9 holes
6/26/09	5467-5473'	3 JSPF	18 holes
6/26/09	5123-5127'	3 JSPF	12 holes
6/26/09	5061-5064'	3 JSPF	9 holes
6/26/09	5012-5019'	3 JSPF	21 holes
6/26/09	4492-4498'	3 JSPF	18 holes

NEWFIELD

Federal H-4-9-16

512' FSL & 1916' FEL

NW/NE Section 4-T9S-R16E

Duchesne Co, Utah

API # 43-013-34153; Lease # UTU-30096

ATTACHMENT E-13

Wells Draw #8-5-9-16

Spud Date: 3/21/00
Put on Production: 4/21/00
Re-completed: 5/1/01
GL: 5776' KB: 5786' 10' KB

Initial Production: 80 BOPD, 96 MCFD, 15 BWPD
Re-completion: 35.4 BOPD, 35 MCFG, 35 BWPD

SURFACE CASING

CSG SIZE: 8-5/8"
GRADE: J-55
WEIGHT: 24#
LENGTH: 7 JTS (309.87')
DEPTH LANDED: 307.47' KB
HOLE SIZE: 12-1/4"
CEMENT DATA: 141 sx Class "G" cmt.

PRODUCTION CASING

CSG SIZE: 5-1/2"
GRADE: J-55
WEIGHT: 17# and 15.5#
LENGTH: 144 jts (5993.87')
HOLE SIZE: 7-7/8"
SET AT: 5991.47' KB
CEMENT DATA: 265 sx Prem Lite II, 400 sx 50/50 Pozmix
CEMENT TOP AT: Above 200' per CBL

TUBING

SIZE/GRADE/WT: 2-7/8", J-55, 6.5#
NO. OF JOINTS: 137 jts. (4297.82')
SEATING NIPPLE: 2-7/8", 1.10'
SN LANDED AT: 4307.82' KB
TOTAL STRING LENGTH: 4316.32' KB

Injection Wellbore Diagram

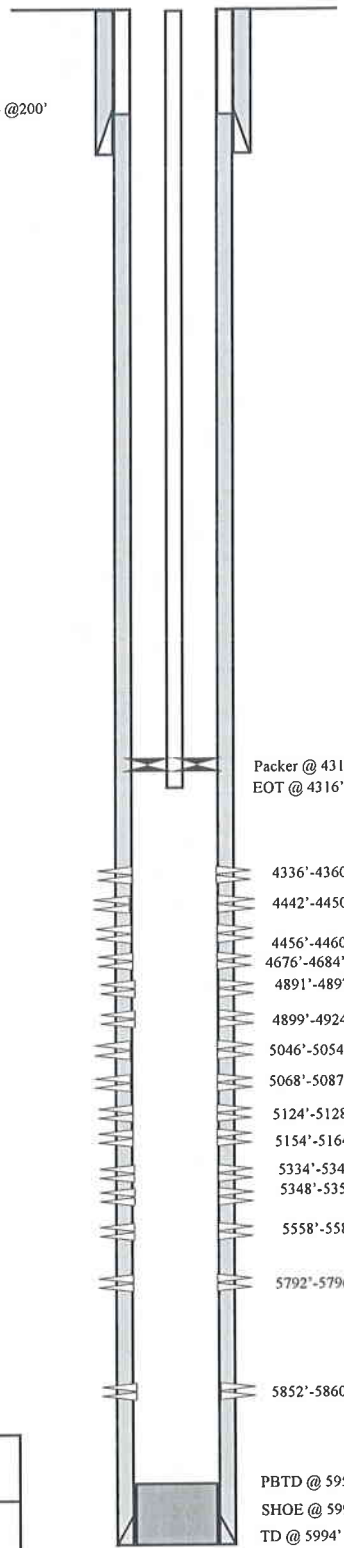

FRAC JOB

04/18/00	4891'-4924'	**Frac D sands as follows:** 84,020#'s 20/40 sand in 479 bbls Viking I-25 fluid. Treated @ avg press of 2300 psi w/ avg rate of 30 BPM. ISIP 2650 psi. Calc flush: 4889 gal. Actual flush: 4746 gal
05/03/01	5792'-5860'	**Frac CP1 and CP.5 sands as follows:** 49,221#'s 20/40 sand in 327 bbls Viking I-25 fluid. Treated @ avg press of 3450 psi with avg rate of 14 BPM. ISIP 2250 psi. Calc flush: 1526 gal. Actual flush: 1428 gal.
05/04/01	5558'-5582'	**Frac LDC sands as follows:** 118,659#'s 20/40 sand in 703 bbls Viking I-25 fluid. Treated @ avg press of 4460 psi w/avg rate of 15.2 BPM. ISIP 3030 psi. Calc flush: 1459 gal. Actual flush: 1344 gal.
05/05/01	5334'-5352'	**Frac A1 sands as follows:** 68,020#'s 20/40 sand in 425 bbls Viking I-25 fluid. Treated @ avg press of 3200 psi w/avg rate of 14.3 BPM. ISIP 2325 psi. Calc flush: 1401 gal. Actual flush: 1302 gal.
05/08/01	5046'-5164'	**Frac B1, B.5 &C sands as follows:** 176,760#'s 20/40 sand in 1037 bbls Viking I-25 fluid. Treated avg press of 4200 psi w/avg rate of 17.7 BPM. ISIP 1950 psi. Calc flush: 1338 gal. Actual flush: 1218 gal.
05/09/01	4676'-4684'	**Frac PB 11 sands as follows:** 48,200#'s 20/40 sand in 324 bbls Viking I-25 fluid. Treated avg press of 3500 psi w/avg rate of 16.2 BPM. ISIP 2230 psi. Calc flush: 1239 gal. Actual flush: 1134 gal.
05/10/01	4336'-4460'	**Frac GB6 and GB2 sands as follows:** 152,820#'s 20/40 sand in 1010 bbls Viking I-25 fluid. Treated avg press of 2000 psi w/avg rate of 30 BPM. ISIP 2230 psi. Calc flush: 4334 gal. Actual flush: 4263 gal.

10/09/01	Tubing leak. Update rod and tubing details.
07/30/02	Pump change. Update rod details.
09/11/02	Stuck plunger. Update rod details.
12/03/02	Pump change. Update rod details.
09/24/03	Parted rods. Update rod details.
03/01/04	Parted rods. Update rod details.
03/20/04	Stuck Pump. Bailed sand. Update rod and tubing details.
04/05/04	Tubing leak.
03/22/05	Parted rods. Update tubing detail.
05/17/05	Parted rods. Update rod detail.
08/14/06	Parted rods. Update rod and tubing details.
1/30/09	**Well converted to an Injection Well.**
2/9/09	**MIT completed and submitted.**

PERFORATION RECORD

4/18/00	4891'-4897'	2 JSPF	12 holes
4/18/00	4899'-4924'	2 JSPF	50 holes
5/01/01	5852'-5860'	4 JSPF	32 holes
5/01/01	5792'-5796'	4 JSPF	16 holes
5/01/01	5558'-5582'	4 JSPF	96 holes
5/01/01	5348'-5352'	4 JSPF	16 holes
5/01/01	5334'-5344'	4 JSPF	40 holes
5/01/01	5154'-5164'	4 JSPF	40 holes
5/01/01	5124'-5128'	4 JSPF	16 holes
5/01/01	5068'-5087'	4 JSPF	76 holes
5/01/01	5046'-5054'	4 JSPF	32 holes
5/01/01	4676'-4684'	4 JSPF	32 holes
5/01/01	4456'-4460'	4 JSPF	16 holes
5/01/01	4442'-4450'	4 JSPF	32 holes
5/01/01	4336'-4360'	4 JSPF	96 holes

NEWFIELD

Wells Draw #8-5-9-16

1809' FNL & 587' FEL

SE/NE Section 5-T9S-R16E

Duchesne Co, Utah

API #43-013-32132; Lease #UTU-30096

CR 2/9/09

ATTACHMENT E-14

Wells Draw #6-4-9-16

Spud Date: 1/7/98
Put on Production: 2/6/98
GL: 5721' KB: 5733'

Initial Production: 84 BOPD, 94 MCFD
8 BWPD

SURFACE CASING

CSG SIZE: 8-5/8"
GRADE: K-55
WEIGHT: 24#
LENGTH: 7 jts
DEPTH LANDED: 290'
HOLE SIZE: 12-1/4"
CEMENT DATA: 120 sxs Premium, est 6 bbls to surface

PRODUCTION CASING

CSG SIZE: 5-1/2"
GRADE: J-55
WEIGHT: 15.5#
LENGTH: 140 jts 5997'
HOLE SIZE: 7-7/8"
CEMENT DATA: 380 sxs Hibond & 365 sxs Thixotropic
CEMENT TOP AT: Surface per CBL
SHOE SET AT: 6008'

TUBING

SIZE/GRADE/WT: 2 7/8" / M-50 / 6.5#
NO. OF JOINTS: 139 jts. (4328.60')
SEATING NIPPLE: 2 7/8" (1.10')
SN LANDED AT: 4340.60'
TOTAL STRING LENGTH: EOT @ 4349.07' KB

Injection Wellbore Diagram

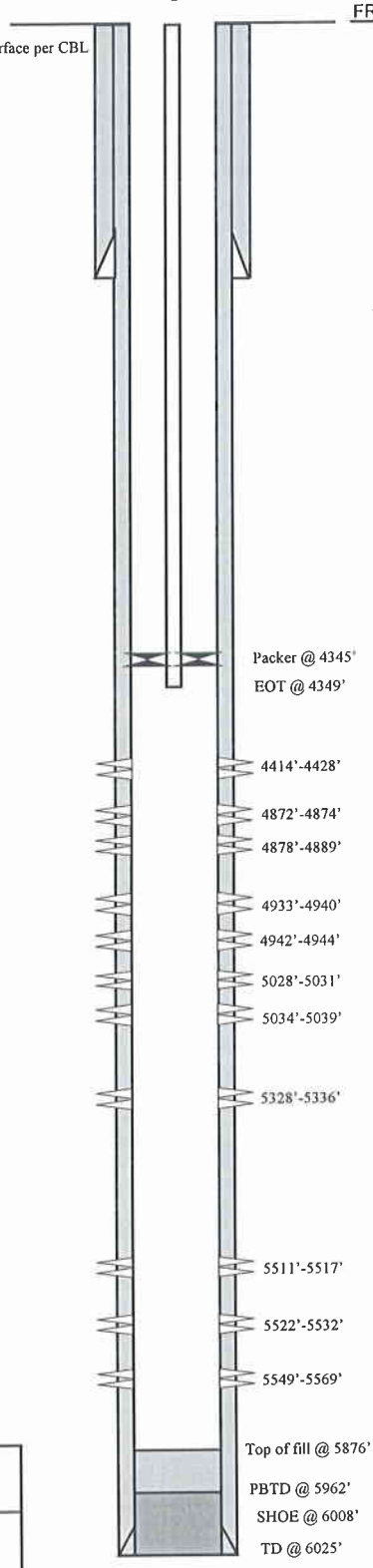

FRAC JOB

1/30/98	5511'-5569	Frac LDC sands as follows: 120,300# 20/40 sd in 582 bbls Delta frac. Breakdown @ 2640 psi. Treated @ avg press of 1980 psi w/avg rate of 34.9 BPM. ISIP - 2411 psi, 5 min 2168 psi. Flowback on 12/64 ck for 4-1/2 hrs & died.
2/1/98	5328'-5336'	Frac A sands as follows: 81,300 # sd in 459 bbls Delta frac. Breakdown @ 2501 psi. Treated @ avg press of 3500 psi w/avg rate of 25 BPM. ISIP - 2094 psi, 5 min 3041 psi. Flowback on 12/64 ck for 2-1/2 hrs & died.
2/04/98	4872'-5039'	Frac D/C sands as follows: 113,300 # 20/40 sd in 556 bbls Delta frac. Breakdown @ 1109 psi. Treated w/avg pres of 1600 psi w/avg rate of 30 BPM. ISIP - 2094 psi, 5 min 2026 psi. Flowback on 12/64 ck 2-1/2 hrs & died.
1/2/02		Pump change. Update rod and tubing details.
9/5/02		Tubing leak. Update rod and tubing details.
10/24/02	4872'-4889'	Refrac D1 sands as follows: 50,000# 20/40 sand in 203 bbls Viking I-25 fluid. Treated @ avg pressure of 2280 psi w/avg rate of 24.6 BPM. ISIP - 2625 psi. Calc. flush: 4872 gals. Actual flush: 4869 gals.
10/24/02	4414'-4428'	Frac GB6 sands as follows: 50,000# 20/40 sand in 214 bbls Viking I-25 fluid. Treated @ avg pressure of 2013 psi w/avg rate of 22.7 BPM. ISIP - 2080 psi. Calc. flush: 4414 gals. Actual flush: 4661 gals.
3/1/03		Pump change. Update rod detail.
8/02/04		Tubing Leak. Update tubing and rod detail.
03/28/07		**Pump Change**. Update rod & tubing details.
10/09/07		**Pump Change**. Update rod & tubing details
10/2/08		**Well converted to an Injection Well.**
10/13/08		**MIT completed and submitted.**

PERFORATION RECORD

1-29-98	5511'-5517'	4 JSPF	24 holes
1-29-98	5522'-5532'	4 JSPF	40 holes
1-29-98	5549'-5569'	4 JSPF	80 holes
1-31-98	5328'-5336'	4 JSPF	32 holes
2-03-98	4872'-4874'	4 JSPF	8 holes
2-03-98	4878'-4889'	4 JSPF	44 holes
2-03-98	4933'-4940'	4 JSPF	28 holes
2-03-98	4942'-4944'	4 JSPF	8 holes
2-03-98	5028'-5031'	4 JSPF	12 holes
2-03-98	5034'-5039'	4 JSPF	20 holes
10-24-02	4414'-4428'	4 JSPF	56 holes

NEWFIELD

Wells Draw #6-4-9-16

1980' FNL & 1980' FWL

SE/NW Section 4-T9S-R16E

Duchesne Co, Utah

API #43-013-31972; Lease #U-30096

CR 10/13/08

ATTACHMENT E-15

Wells Draw #10-5-9-16

Spud Date: 3/14/2000
Put on Production: 4/10/2000
GL: 5843' KB: 5853'

Initial Production: 80 BOPD, 258 MCFD, 1 BWPD

Wellbore Diagram

SURFACE CASING

CSG SIZE: 8-5/8"
GRADE: J-55
WEIGHT: 24#
LENGTH: 7 jts. (297.24')
DEPTH LANDED: 309.09'
HOLE SIZE:12-1/4"
CEMENT DATA: 141 sxs Class "G" cmt,

PRODUCTION CASING

CSG SIZE: 5-1/2"
GRADE: J-55
WEIGHT: 15.5#
LENGTH: 130 jts. (5995.54')
DEPTH LANDED: 5993.14'
HOLE SIZE: 7-7/8"
CEMENT DATA: 265 sk Prem. Lite II mixed & 400 sxs 50/50 POZ.
CEMENT TOP: 880' per CBL

TUBING

SIZE/GRADE/WT.: 2-7/8" / J-55 / 6.5#
NO. OF JOINTS: 169 jts (5284.20')
TUBING ANCHOR: 5284.2'
NO. OF JOINTS: 2 jts (62.9')
SEATING NIPPLE: 2-7/8" (1.10')
SN LANDED AT: 5349.9'
NO. OF JOINTS: 1 jts (31.4')
TOTAL STRING LENGTH: EOT @ 5383'

SUCKER RODS

POLISHED ROD: 1-1/2" x 22'
SUCKER RODS: 1- 4' x ¾" pony rod, 1- 2' x ¾" pony rod, 208- ¾" guided rods, 6- 1 ½" weight bars
PUMP SIZE: 2-1/2" x 1-1/2" x 16' RHAC
STROKE LENGTH: 84"
PUMP SPEED, SPM: 5 spm
LOGS Dual Lateralog, GR, SP, Spectral Density-Dual Spaced Neutron, CBL-GR

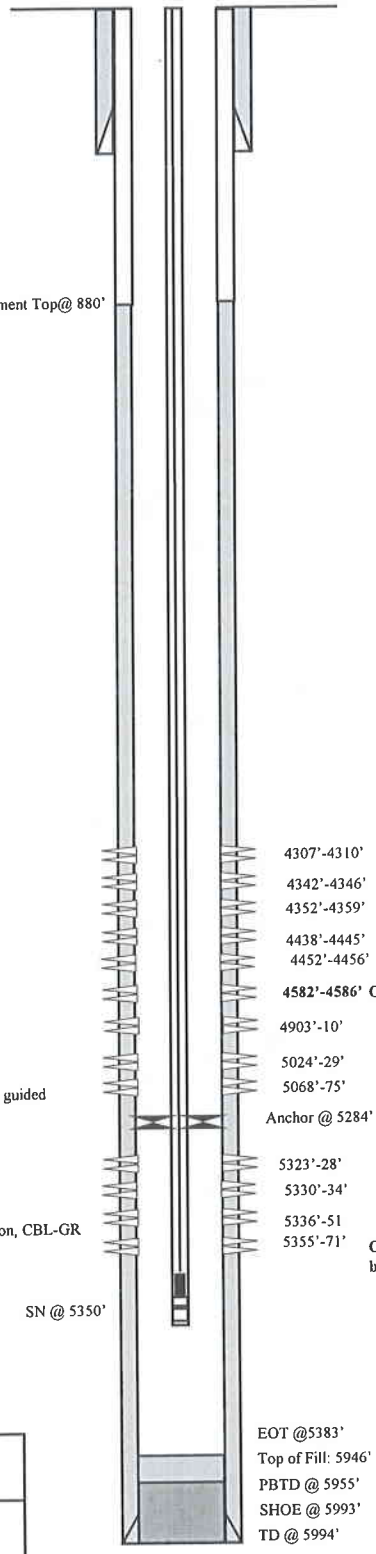

FRAC JOB

4/05/00	5323'-71'	**Frac A sands as follows:** 96,000# 20/40 sand in 604 bbls Viking 1-25 fluid. Treated @ avg press of 1700 psi w/ avg rate of 33 BPM. ISIP: 2200 psi. Calc. flush: 5323 gal. Actual flush: 5250 gal.
4/05/00	4903-5075'	**Frac D/C sands as follows:** 119,171# 20/40 sand in 634 bbls Viking 1-25 fluid. Treated @ avg press of 2360 psi w/ avg rate of 34.3 BPM. ISIP: 2370 psi. Calc. flush 4903 gal. Actual flush: 4830 gal.
12/19/01		Pump change. Update pump details.
9/27/02	4307'-4456'	**Frac GB 2,4,6 sands as follows:** 88,800# 20/40 white mesh sand in 377 bbls Viking 1-25 fluid. Treated @ avg press of 2,695 psi w/ avg rate of 24.7 BPM. ISIP: 2210 psi. Calc. flush: 4307 gal. Actual flush: 4200 gal.
01/08/04		Guide complete rod string. Update rod details.
05/28/08		pump change. Updated rod and tubing details
1/20/2010		Parted rods. Updated rod and tubing detail.

PERFORATION RECORD

4/05/00	5355'-5371'	2 JSPF	32 holes
4/05/00	5336'-5351'	2 JSPF	30 holes
4/05/00	5330'-5334'	2 JSPF	08 holes
4/05/00	5323'-5328'	2 JSPF	10 holes
4/05/00	5068'-5075'	4 JSPF	28 holes
4/05/00	5024'-5029'	4 JSPF	20 holes
4/05/00	4903'-4910'	4 JSPF	28 holes
9/27/02	**4582'-4586'**	**4 JSPF**	**16 holes**
9/27/02	4452'-4456'	4 JSPF	16 holes
9/27/02	4438'-4445'	4 JSPF	28 holes
9/27/02	4352'-4359'	4 JSPF	28 holes
9/27/02	4342'-4346'	4 JSPF	16 holes
9/27/02	4307'-4310'	4 JSPF	12 holes

Out of Zone-Not treated or broken down

NEWFIELD

Wells Draw # 10-5-9-16

1787' FSL & 2034' FEL

NW/SE Section 5-T9S-R16E

Duchesne Co, Utah

API #43-013-32133; Lease #UTU-034217A

ML 4-13-2010

Attachment E-16

NGC 12-4G-9-16

Spud Date: 4-8-83
Put on Production: 9-12-83
GL: 5734' KB: 5748'

Initial Production: 55 BOPD, 0 MCFD
16 BWPD

Injection Wellbore Diagram

SURFACE CASING

CSG SIZE: 8-5/8"
GRADE: J-55
WEIGHT: 32#
LENGTH: 7 JTS
DEPTH LANDED: 305'
HOLE SIZE: 12-1/4"
CEMENT DATA: 215 skx Class "G"cmt, est 18 bbls to surface

PRODUCTION CASING

CSG SIZE: 5-1/2"
GRADE: K-55, J-55
WEIGHT: 15.5#
LENGTH: 166 jts (6409')
HOLE SIZE: 7-7/8"
CEMENT DATA: 682 sks BJ Lite
CEMENT TOP AT: 2496'
SET AT: 6518'

TUBING

SIZE/GRADE/WT: 2-7/8" / J-55 / 6.5#
NO. OF JOINTS: 150 jts (4773')
SEATING NIPPLE: 2-7/8"
SN LANDED AT: 4774'
PACKER: 4780'
TOTAL STRING LENGTH: EOT 4780'

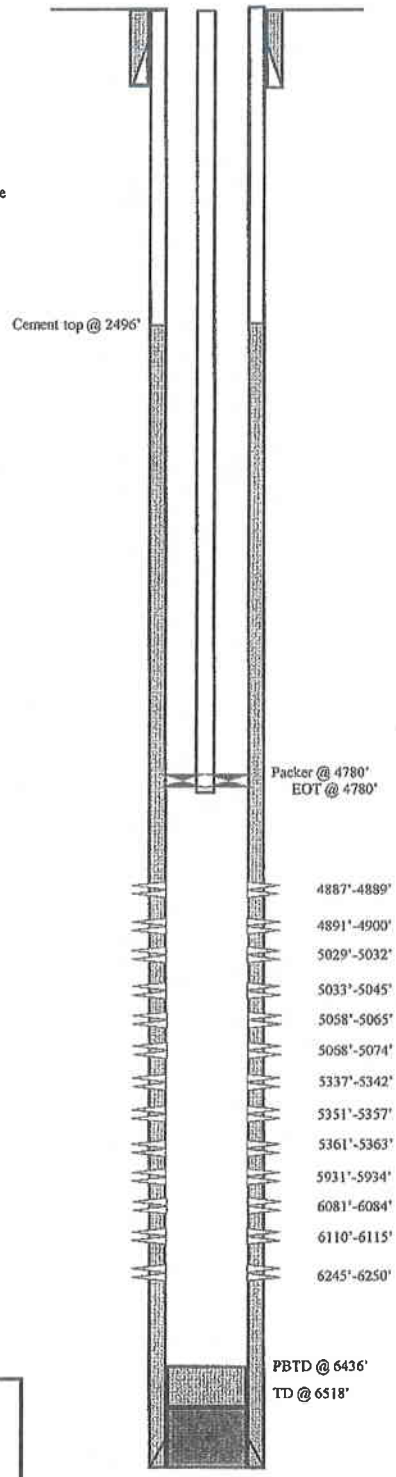

FRAC JOB

8-26-83	5931'-6250'	80,000# 20/40 ttl sd, 26,800 gals ttl fluid. Avg rate of 38 BPM w/ avg press of 2500 psi. ISIP-1950 psi, 5 min 1900 psi.
8-26-83	5337'-5367'	160,000 ttl sd, 45,940 gals ttl fluid. Avg rate of 37 BPM w/ avg press of 1900 psi. ISIP-1800 psi, 5 min 1710 psi.
8-30-83	5029'-5074'	198,000 ttl sd, 55,590 gals ttl fluid. Avg rate of 47 BPM w/ avg press of 2300 psi. ISIP-2100 psi, 5 min 1700 psi.
9-1-83	4887'-4900'	99,400# ttl sd, 28,190 ttl fluid. Avg rate of 38 BPM w/avg press of 2300 psi. ISIP-2250 psi, 5 min 1900 psi.
6-26-98		Convert to Injection well
6-30-98		Conversion MIT
6-16-03		5 yr MIT
5/14/08		5 Year MIT completed and submitted.

PERFORATION RECORD

8-24-83	5931'-5934'	1 JSPF	4 holes
8-24-83	6081'-6084'	1 JSPF	4 holes
8-24-83	6110'-6115'	1 JSPF	6 holes
8-24-83	6245'-6250'	2 JSPF	11 holes
8-26-83	5337'-5342'	2 JSPF	11 holes
8-26-83	5351'-5357'	2 JSPF	13 holes
8-26-83	5361'-5363'	2 JSPF	5 holes
8-30-83	5029'-5032'	3 JSPF	10 holes
8-30-83	5033'-5045'	3 JSPF	36 holes
8-30-83	5058'-5065'	3 JSPF	22 holes
8-30-83	5068'-5074'	3 JSPF	19 holes
8-31-83	4891'-4900'	3 JSPF	28 holes
8-31-83	4887'-4889'	3 JSPF	7 holes

NEWFIELD

NGC 12-4G-9-16
809 FWL 2083 FNL
SWNW Section 4-T9S-R16E
Duchesne Co, Utah
API # 43-013-30699; Lease # U-30096

CR 5/20/08

Attachment E-17

NGC Federal 32-5G-9-16

Spud Date: 7/19/82
Completion: 11/14/82
Put on Injection: 1/11/95
GL: 5809' KB: 5823'

Initial Production: 290 BOPD, 115 MCFPD, 9 BWPD

Injection Diagram

SURFACE CASING

CSG SIZE: 9-5/8"
GRADE: K-55
WEIGHT:36#
LENGTH: ?
DEPTH LANDED: 310'
HOLE SIZE: 12-1/4"
CEMENT DATA: 165 sxsClass "G" cmt

PRODUCTION CASING

CSG SIZE: 5-1/2"
GRADE: N-80
WEIGHT: 17#
LENGTH: ?
DEPTH LANDED: 6450'
HOLE SIZE: 7-7/8"
CEMENT DATA: 200 sxs BJ Lite & 700 sxs 50/50 Poz cmt
CEMENT TOP AT:

TUBING

SIZE/GRADE/WT.: 2-7/8" / J-55 / 6.5#
NO. OF JOINTS: 139 jts
PACKER: 4314'
TOTAL STRING LENGTH: 4314'

FRAC JOB

6278'-6282'	Acidize w/36 bbls. 15% MCA, ISIP 2100#.
5092'-5095'	Acidize w/25 bbls. KCL, 100 gal 15% frac w/45,100 gal fluid and 115,000 lbs. sand. ISIP 2310#.
4906'-4940'	Frac w/37,190 gal fluid and 75,740 lbs. sand. ISIP 3800#.
4352'-4363'	Frac w/34,910 gal fluid and 95,200 lbs. sand. ISIP 2350#.
3738'-3752'	Frac w/30,670 gal fluid and 62,000 lbs. sand. ISIP 1900#.
3738'-3752'	Sqz off w/100 sx. Class H cmt - held 3000 psi.
10/13/94	Convert to injection well
9/24/02	5 yr MIT
8/31/07	5 Year MIT completed and submitted.

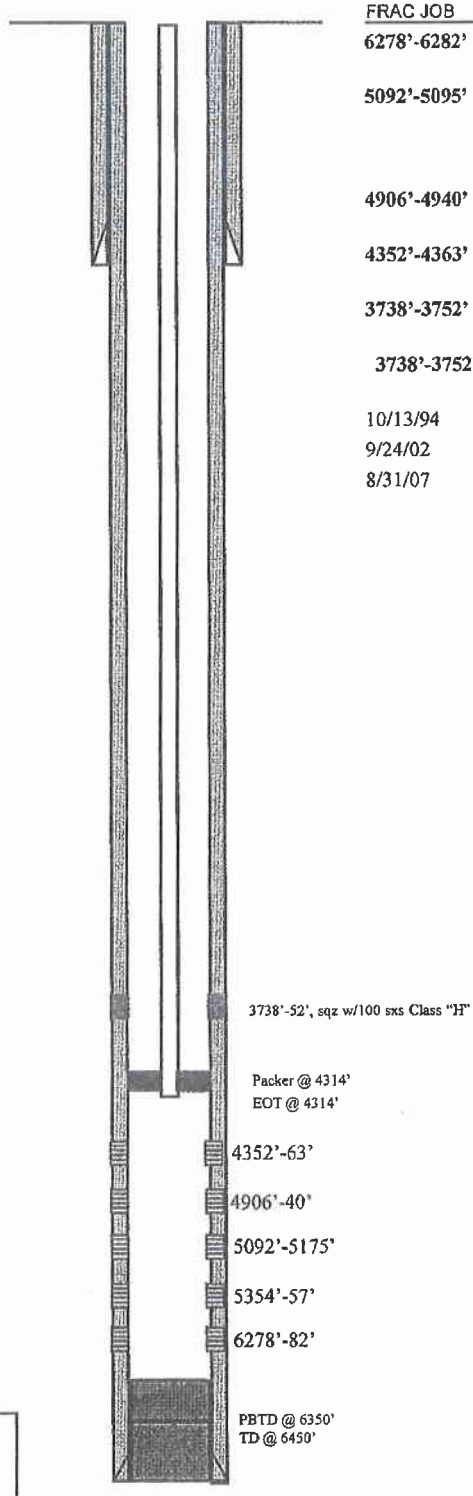

PERFORATION RECORD

6278'-6282'	3 JSPF	13 holes
5092'-5357'	1 JSPF	14 holes
4906'-4940'	1 JSPF	26 holes
4352'-4363'	2 JSPF	23 holes

NEWFIELD

NGC Federal 32-5G
1976 FNL 1366 FEL
SWNE Section 5-T9S-R16E
Duchesne Co, Utah
API #43-013-30670; Lease #U-30096

CR 9/20/07

ATTACHMENT E-18

Federal #11-4G-9-16

Spud Date: 12/21/89
Put on Production: 3/21/90
GL: 5750' KB: 5761'

Initial Production: 78 BOPD, 0 MCFD
130 BWPD

SURFACE CASING

CSG SIZE: 8-5/8"
GRADE: K-55
WEIGHT: 24#
LENGTH: 7 JTS
DEPTH LANDED: 296'
HOLE SIZE: 12-1/4"
CEMENT DATA: 165 Class "G"cmt, est ? bbls to surface

PRODUCTION CASING

CSG SIZE: 5-1/2"
GRADE: K-55
WEIGHT: 17#
LENGTH: 151 jts
HOLE SIZE: 7-7/8"
CEMENT DATA: 317 sks Hi-Lift & 595 sks 10-0 RFC
CEMENT TOP AT: 1430'
SET AT: 6453'

TUBING

SIZE/GRADE/WT: 2-7/8", J-55, 6.5#
NO. OF JOINTS: 140 jts (4386.96')
SEATING NIPPLE: 2-7/8" (1.10')
SN LANDED AT: 4399.96'
TOTAL STRING LENGTH: EOT @ 4408.46' w/13' KB

Injection Wellbore Diagram

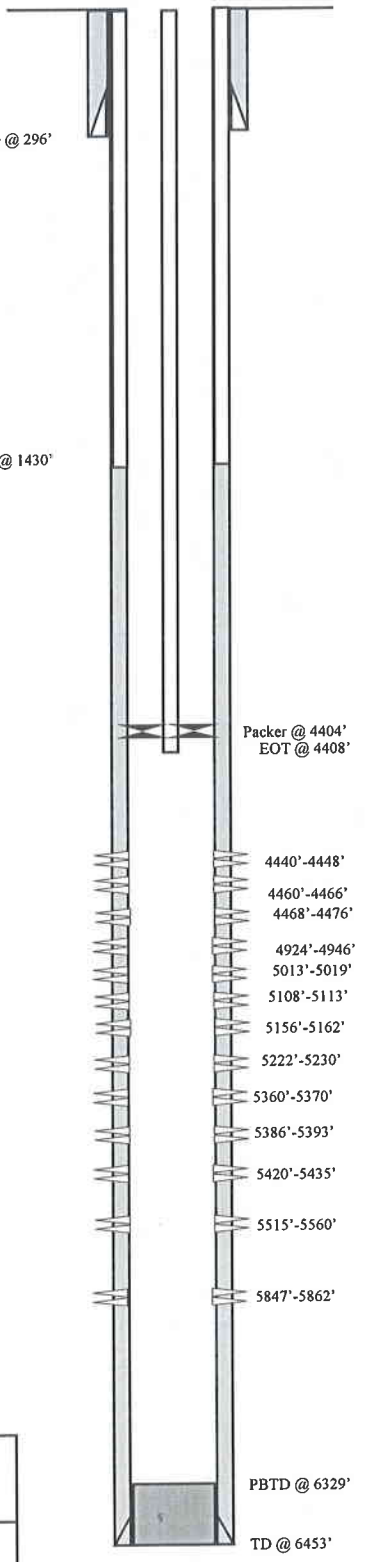

FRAC JOB

2-15-90	5847'-5862'	35,000# 20/40 sand, 53,000# 16/30 sand, and 88,000# ttl sd. Avg TP 2300 psi. ISIP-2330 psi.
2-17-90	5515'-5560'	Screened out w/42,000# 20/40 in formation. Job scheduled from 180,000#, cannot maintain rate. Avg TP 3700 psi. ISIP-2700 psi, 15 min 1870 psi.
2-21-90	5360'-5435'	70,000# 20/40 sand, 68,000# 16/30 sand, and 138,000 sd ttl. Avg TP 2600 psi. ISIP-1800 psi, 15 min 940 psi.
2-24-90	5222'-5019'	41,000# 16/30 sand. Avg TP 2900 psi, 15 min 1150 psi.
2-27-90	4924'-4946'	48,000# 20/40 sand. Sand master broke down & couldn't pump 16/30 sand. Avg TP 2550 psi. ISIP-1770 psi, 15 min 1500 psi.
2-05-03	5156'-5162'	Frac B.5 sands as follows: 20,307# 20/40 sand in 198 bbls Viking I-25 fluid. Treated @ avg. pressure of 3953 psi w/avg. rate of 14.5 BPM. ISIP - 2695 psi. Calc. flush: 1307 gal. Actual flush: 1218 gal.
2-05-03	4440'-4476'	Frac GB6 sands as follows: 74,499# 20/40 sand in 564 bbls Viking I-25 fluid. Treated @ avg. pressure of 2176 psi w/avg. rate of 24.6 BPM. ISIP - 2240 psi. Calc. flush: 4440 gal. Actual flush: 4242 gal.
02-20-06		Pump Change. Updated rod and tubing detail
12/12/08		**Well converted to an Injection well.**
12/23/08		**MIT completed and submitted.**

PERFORATION RECORD

2-13-90	5847'-5862'	4 JSPF	60 holes
2-16-90	5515'-5560'	4 JSPF	180 holes
2-20-90	5360'-5370'	4 JSPF	40 holes
2-20-90	5386'-5393'	4 JSPF	28 holes
2-20-90	5420'-5435'	4 JSPF	60 holes
2-22-90	5222'-5230'	4 JSPF	32 holes
2-22-90	5108'-5113'	4 JSPF	20 holes
2-22-90	5013'-5019'	4 JSPF	24 holes
2-26-90	4924'-4946'	4 JSPF	88 holes
2-04-03	5156'-5162'	4 JSPF	24 holes
2-04-03	4468'-4476'	4 JSPF	32 holes
2-04-03	4460'-4466'	4 JSPF	24 holes
2-04-03	4440'-4448'	4 JSPF	32 holes

NEWFIELD

Federal #11-4G-9-16
800 FWL & 660 FNL
NWNW Section 4-T9S-R16E
Duchesne Co, Utah
API #43-013-31250; Lease #U-30096

CR 12/23/08

Attachment E-19

Castle Peak Federal 43-5-9-16

Spud Date: 1/2/84
Put on Production: 2/14/84
Put on Injection: 7/2/98

GL: 5786' KB: 5796'

Initial Production: 45 BOPD, 14 MCFD
20 BWPD

SURFACE CASING

CSG SIZE: 8-5/8"
DEPTH LANDED: 240'
HOLE SIZE: 12-1/4"
CEMENT: 190 sx Class "G"cmt

PRODUCTION CASING

CSG SIZE: 5-1/2"
HOLE SIZE: 7-7/8"
CEMENT DATA: 195 sks Lite & 385 sks thixotropic
CEMENT TOP AT: 750'
SET AT: 6025'

TUBING

SIZE/GRADE/WT: 2-3/8" / J-55 / 6.5#
NO. OF JOINTS: 137 jts (4254.8')
SN LANDED AT: 4264.8'
X-over: 2 3/8" to 2 7/8"
PACKER: 4267'
TOTAL STRING LENGTH: 4270'

Injection Wellbore Diagram

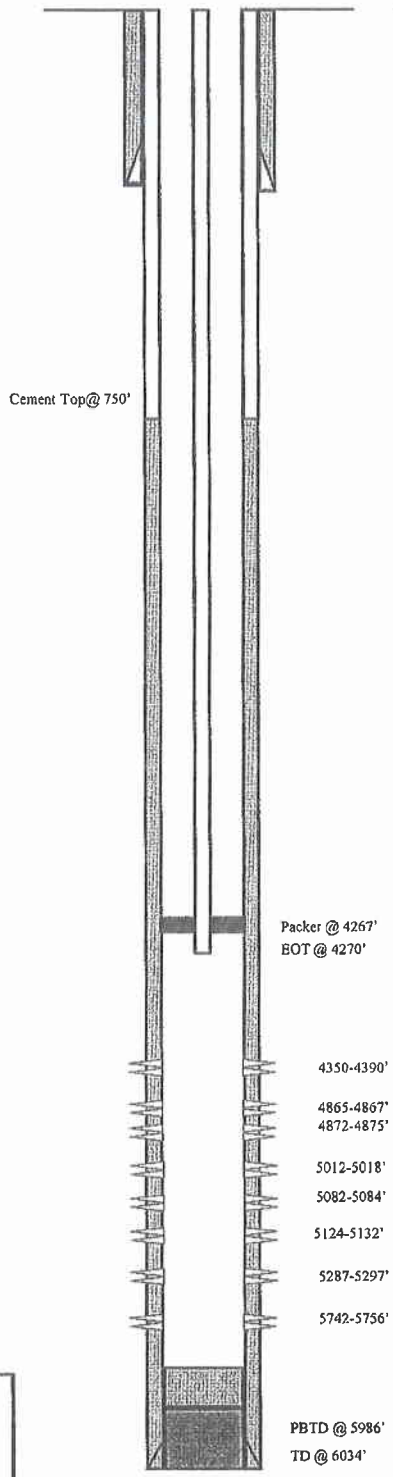

FRAC JOB

2-11-84	5742'-5756'	44,010 gals YF4G, containing 1000# inverta frac sd, 2000# diverta frac sd, 44,000# 20/40 sd & 16,992# 10/20 sd. Screened out. Avg rate of 11 BPM @ 1900 psi.
3-8-84	5287'-5297'	38,396 gals YF4G containing 1002 # diverta frac sd., 2005 # inverta frac sd, 38,000# 20/40 sd & 10,000# 10/20 sd. Avg rate of 12 BPM @ 2650 psi. ISIP-2700 psi, 15 min 2200 psi.
3-29-84	4350'-4390'	68,352 gals YF4G containing 85,500# 20/40 sd & 3360# 10/20 sd. Screened out. Avg rate of 20 BPM @ 1900 psi. ISIP-2000 psi, 20 min 1175 psi.
3-20-85	4865'-4875'	KCl water @ 5500 psi spotted 500 gallons 15% acid & brokedown new zone @ 2800 psi /4 bpm to 1900 psi/ 7-1/2 bpm, balled off, surged balls off perfs, released pkr & ran by perfs, pulled up reseat packer @ 4450, fraced well w/ Nowsco, total fluid 40,000 gals Beta II 35 gals containing 77,000# 20/40 sand, max sand cond = 5 ppg, Air = 17 bpm, Aip = 3000 psi, ISIP = 2200 psi
6/30/98		Convert to injector.
06-16-03		5 yr MIT
06-01-05	5012-5132'	Frac B1, B.5 & D3 sands w/ 27991# of 20/40 sand in 262 bbls Lighting 17 fluid.
06-10-05		Recompletion finalized – MIT completed
05-12-10		5 yr MIT

PERFORATION RECORD

2-11-84	5742'-5756'	2 JSPF	28 holes
3-7-84	5287'-5292'	2 JSPF	20 holes
3-28-84	4350'-4390'	2 JSPF	80 holes
3-20-85	4865'-4867'	4 JSPF	8 holes
3-20-85	4872'-4875'	4 JSPF	12 holes
06-01-05	5012-5018'	4 JSPF	24 holes
06-01-05	5082-5084'	4 JSPF	8 holes
06-01-05	5124-5132'	4 JSPF	32 holes

NEWFIELD

Castle Peak Federal 43-5-9-16
1989 FSL & 570 FEL
NESE Section 5-T9S-R16E
Duchesne Co, Utah
API # 43-013-30858; Lease # U-034217A

LCN 05-03-11

ATTACHMENT E-20

Balcron Monument Federal #14-4-9-16

Spud Date: 8-11-96
Put on Production: 9-9-96
GL: 5766' KB: 5776'

Initial Production: 33 BOPD, 0 MCFD
0 BWPD

SURFACE CASING

CSG SIZE: 8-5/8"
GRADE: J-55
WEIGHT: 24#
LENGTH: 6 JTS (253')
DEPTH LANDED: 263'
HOLE SIZE: 12-1/4"
CEMENT DATA: 160 sx Class "G"cmt

PRODUCTION CASING

CSG SIZE: 5-1/2"
GRADE: J-55
WEIGHT: 15.5#
LENGTH: 135 jts (5831.81)
HOLE SIZE: 7-7/8"
CEMENT DATA: 270 sx Super G & 400 sx 50/50 Poz
CEMENT TOP AT: 1100'
SET AT: 5841'

TUBING

SIZE/GRADE/WT: 2-7/8", J-55, 6.5#
NO. OF JOINTS: 137 jts. (4252.04')
SN: @ 4262.04' KB
PACKER CE.: 4266.26' KB
TOTAL STRING LENGTH: EOT @ 4270.47' KB

Injector Wellbore Diagram

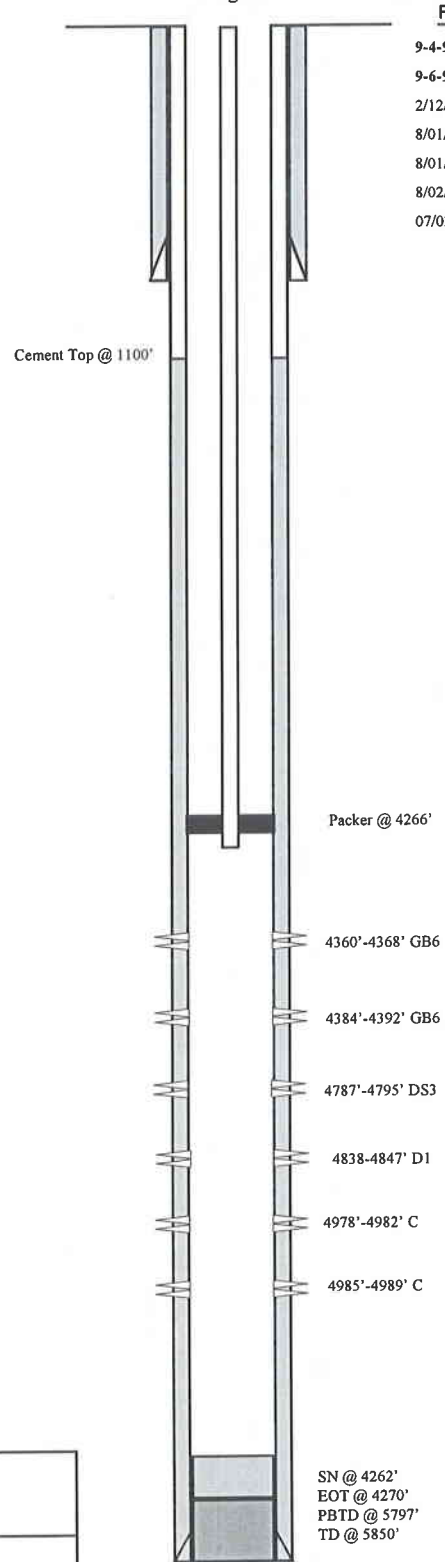

FRAC JOB

9-4-96	**4978'-4989'**	**48,100# 16/30 sand, and 17,388 gals fluid.**
9-6-96	**4787'-4847'**	**96,400# 16/30 sand, and 28,476 gals fluid.**
2/12/02	Tubing leak. Update rod and tubing details.	
8/01/02	4360'-4368'	110 gal 15% HCl w/ 5 BPM @ 1700 psi.
8/01/02	4360'-4368'	110 gal 15% HCl w/ 1 BPM @ 1500 psi.
8/02/02		Convert to injector.
07/03/07		Five year MIT

PERFORATION RECORD

9/4/96	4985'-4989'	4 JSPF	16 holes
9/4/96	4978'-4982'	4 JSPF	16 holes
9/4/96	4838'-4847'	2 JSPF	18 holes
9/4/96	4787'-4795'	2 JSPF	16 holes
8/01/02	4384'-4392'	4 JSPF	32 holes
8/01/02	4360'-4368'	4 JSPF	32 holes

NEWFIELD

Balcron Monument Federal #14-4-9-16
719 FSL & 607 FWL
SWSW Section 4-T9S-R16E
Duchesne Co, Utah
API #43-013-31666; Lease #U-73086

JP 07/11/07

Castle Peak Unit #9-5-9-16

Spud Date: 3/11/65
Put on Production 4/12/65
P&A: 2/15/74
GL: 5811' KB: 5821'

Initial Production: 102 BOPD, 50 MCFD, 3 BWPD

Cumm. Production: 24,918 BO, 37,861 MCFG, 0 BW.

P&A

Wellbore Diagram

SURFACE CASING

CSG SIZE 9-5/8"
GRADE H-40
WEIGHT 32.5#
DEPTH LANDED 221' KB
HOLE SIZE
CEMENT DATA: 150 sxs cement

PRODUCTION CASING

CSG SIZE 4-1/2"
GRADE J-55
WEIGHT 11.6#
DEPTH LANDED 5862' KB
HOLE SIZE
CEMENT DATA 450 cubic feet cement
CEMENT TOP AT ? per CBL

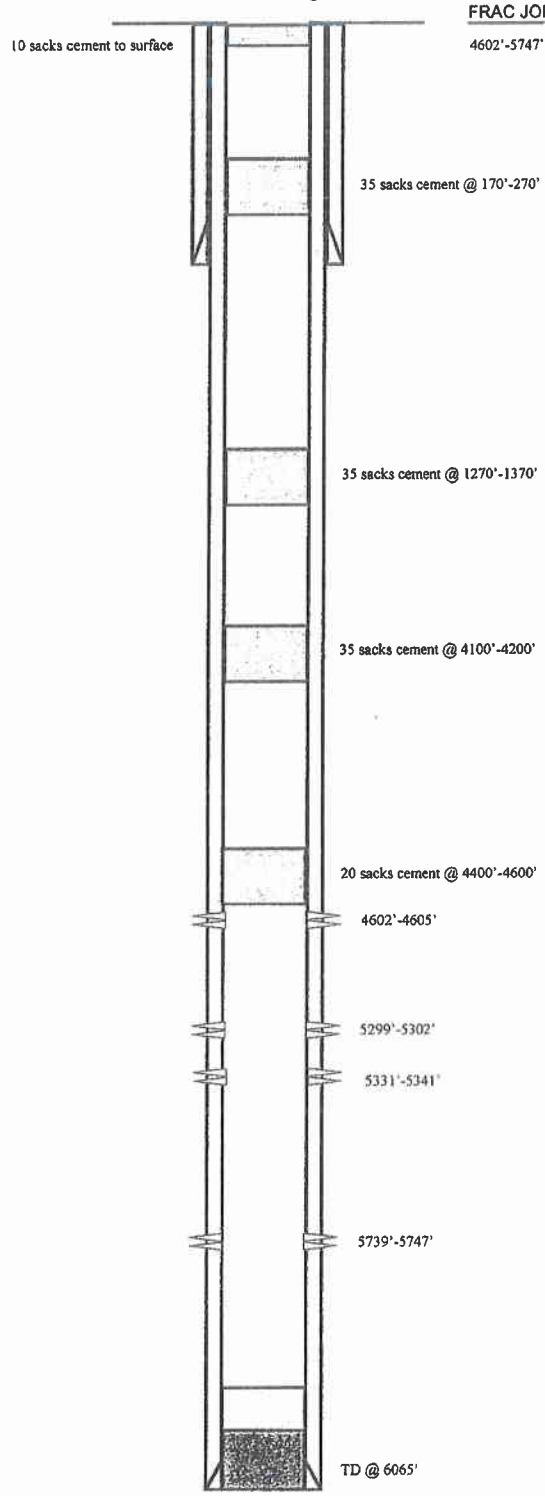

FRAC JOB

4602'-5747'

Frac sands as follows:
48,000# sand in 909 bbls water Treated @ avg press of 4500 psi w/avg rate of 50 BPM Started to screen out Flush with 3948 gal ISIP 1800 psi

PERFORATION RECORD

5739'-5747'	1 JSPF	8 holes
5331'-5341'	1 JSPF	10 holes
5299'-5302'	1 JSPF	3 holes
4602'-4605'	1 JSPF	3 holes

NEWFIELD

Castle Peak #9-5-9-16
819' FSL & 763' FEL
SESE Section 5-T9S-R16E
Duchesne Co, Utah
API #43-013-15787; Lease #U-34217-A

BDH 9/12/02

ATTACHMENT

SWD Federal #R-4-9-16

Spud Date: 6-4-08
Put on Production: 8-15-08

GL:5603' KB:5615'

SURFACE CASING

CSG SIZE: 8-5/8"
GRADE: K-55
WEIGHT: 24#
LENGTH: 7 jts (318.08')
DEPTH LANDED: 328.08'
HOLE SIZE: 12-1/4"
CEMENT DATA: To surface with 160 sx Class "G" cmt

PRODUCTION CASING

CSG SIZE: 5-1/2"
GRADE: K-55
WEIGHT: 17#
LENGTH: 136 jts 6220.27'
HOLE SIZE: 7-7/8"
CEMENT DATA: 300 sx Premlite II and 450 sx 50/50 Poz
CEMENT TOP AT: 46'

TUBING

SIZE/GRADE/WT: 2-7/8", J-55, 6.5#
NO. OF JOINTS: 194 jts (5961.58')
TUBING ANCHOR: 5973.58' KB
NO. OF JOINTS: 1 jt (31.46')
SEATING NIPPLE: 2-7/8" (1.10')
SN LANDED AT: 6007.74'
NO. OF JOINTS: 2 jts (62.88')
TOTAL STRING LENGTH: EOT @ 6072.17'

SUCKER RODS

POLISHED ROD: 1-1/2"x 26'
SUCKER RODS: 2-2' x 7/8" pony rods, 238- 7/8" scrapered rods, 4-1 ½" weight rods
PUMP SIZE: CDI 2 ½"x 1 ¾" x 21' RHAC pump w/sm plunger
STROKE LENGTH: 122"
PUMP SPEED, SPM: 4 SPM

Wellbore Diagram

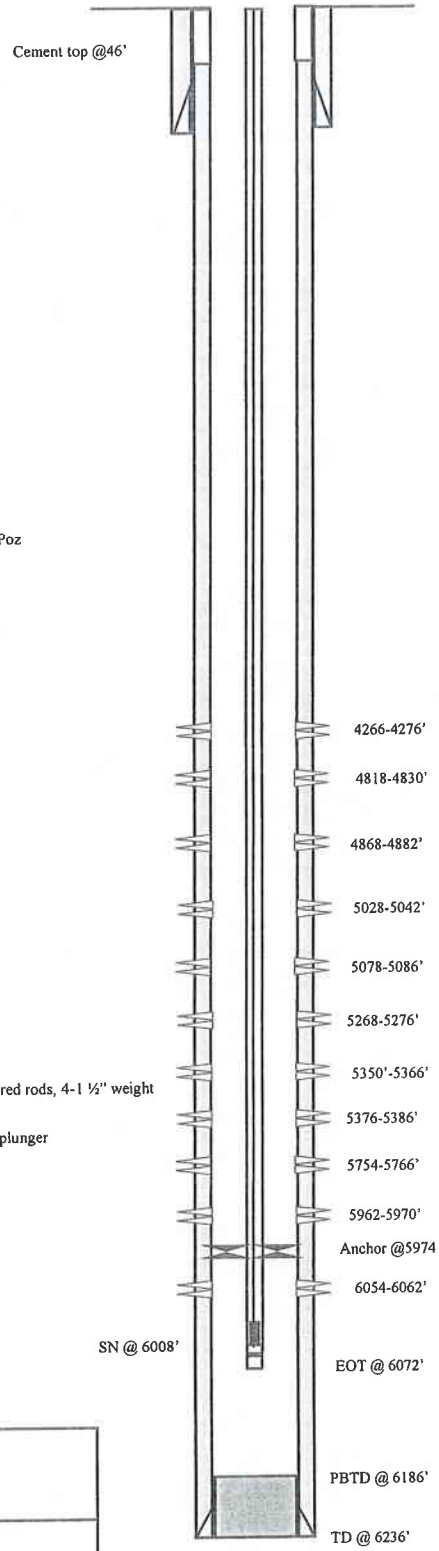

FRAC JOB

7-21-08 6054-6062' **Frac CP5 sds as follows:** Frac w/23,841#'s of 20/40 sand in 382 bbls of Lightning 17 fluid. Treat at an ave pressure of 2307 psi w/ ave rate of 23.2. ISIP 2024 psi.

7-21-08 5962-5970' **Frac CP4 sds as follows:** Frac w/25,330#'s of 20/40 sand in 374 bbls of Lightning 17 fluid. Treat w/ ave pressure of 2407 psi w/ ave rate of 22.9. ISIP 2269

7-21-08 5350-5366' **Frac LODC sds as folows:** Frac w/65,317#'s of 20/40 sand in 558 bbls of Lightning 17 fluid. Treated w/ ave pressure of 2133 psi w/ ave rate of 22.8 BPM. ISIP 2848 psi.

7-21-08 5268-5276' **Frac A1 sds as follows:** Frac w/24,872#'s of 20/40 sand in 359 bbls of Lightning 17 fluid. Treated w/ ave pressure of 2382 psi w/ ave rate of 23.0 BPM. ISIP 2247 psi.

7-21-08 5028-5042' **Frac B.5 & B1 sds as follows:** Frac 50,070#'s of 20/40 sand in 455 bbls of Lightning 17 fluid. Treated w/ ave pressure of 2137 psi w/ ave rate of 22.7 BPM. ISIP 2194 psi.

7-21-08 4818-4830' **Frac D1 & D2 sds as follows:** Frac 130,336#'s of 20/40 sand in 911 bbls of Lightning 17 fluid. Treated w/ ave pressure of 2239 psi w/ ave rate of 22.9 BPM. ISIP 2435 psi.

7-21-08 4266-4276' **Frac GB2 sds as follows:** Frac 24,830#'s of 20/40 sand in 911 bbls of Lightning 17 fluid. Treated w/ ave pressure of 2239 psi w/ ave rate of 22.9 BPM. ISIP 2435 psi.

PERFORATION RECORD

4266-4276'	4 JSPF	40 holes
4818-4830'	4 JSPF	48 holes
4868-4882'	4 JSPF	56 holes
5028-5042'	4 JSPF	64 holes
5078-5086'	4 JSPF	32 holes
5268-5276'	4 JSPF	32 holes
5350-5366'	4 JSPF	64 holes
5376-5386'	4 JSPF	40 holes
5754-5766'	4 JSPF	48 holes
5962-5970'	4 JSPF	32 holes
6054-6062'	4 JSPF	32 holes

NEWFIELD

SWD Federal #R-4-9-16
2053' FSL & 2051' FEL
NE/SE Section 4-T9S-R16E
Duchesne Co, Utah
API #43-013-33763; Lease #UTU-77338

TL 9/22/08

ATTACHMENT

WELLS DRAW FED. I-5-9-16

Spud Date: 11/17/07
Put on Production: 02/01/08

GL: 5805' KB: 5817'

Initial Production: BOPD, MCFD, BWPD

Wellbore Diagram

SURFACE CASING

CSG SIZE 8-5/8"
GRADE J-55
WEIGHT 24#
LENGTH 7 jts. (312.43')
DEPTH LANDED 324.28' KB
HOLE SIZE 12-1/4"
CEMENT DATA: 1- 160, sxs Class "G" cmt, est 0 bbls cmt to surf.

PRODUCTION CASING

CSG SIZE 5-1/2"
GRADE J-55
WEIGHT 15.5#
LENGTH 149 jts (6414.75')
DEPTH LANDED 6428.00' KB
HOLE SIZE 7-7/8"
CEMENT DATA 350 sxs Prem. Lite II mixed & 450 sxs 50/50 POZ.
CEMENT TOP 34'

TUBING

SIZE/GRADE/WT 2-7/8" / J-55 / 6.5#
NO OF JOINTS 186 jts (5853.47')
TUBING ANCHOR 5865.47' KB
NO OF JOINTS 3 jts (94.50')
SEATING NIPPLE 2-7/8" (1.10')
SN LANDED AT 5962.78' KB
NO OF JOINTS 2 jts (62.97')
TOTAL STRING LENGTH EOT @ 6027.30' KB

SUCKER RODS

POLISHED ROD: 1-1/2" x 26' SM polished rods
SUCKER RODS: 2, 6, X 7/8" pony rods, 134-7/8" scrapered rods, 4-1 ½" weight bars
PUMP SIZE CDI 2-1/2" x 1-3/4" x 20'x16 ' RHAC
STROKE LENGTH 120"
PUMP SPEED, 6 SPM

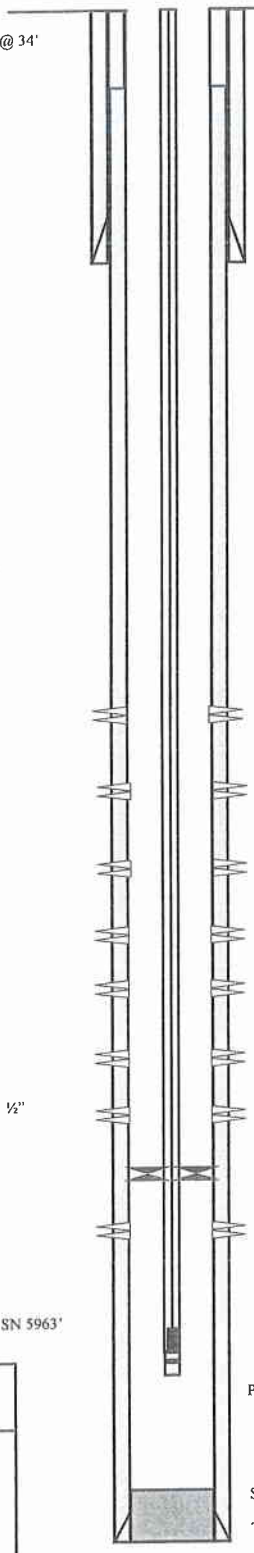

FRAC JOB

01/09/08	5890-5966'	**Frac CP.5, CP1 & CP2 sands as follows:** 45156# 20/40 sand in 522 bbls Lightning 17 frac fluid. Treated @ avg press of 1878 psi w/avg rate of 23.1 BPM. ISIP 2042 psi
01/10/07	5243-5249'	**Frac B.5 sands as follows:** 14290# 20/40 sand in 274 bbl Lightning 17 frac fluid. Treated @ avg press of 2237 psi w/avg rate of 23.3 BPM. ISIP 1911 psi
01/10/07	5181-5188'	**Frac C sands as follows:** 25502# 20/40 sand in 384 bbls Lightning 17 frac fluid. Treated @ avg press of 2376 psi w/avg rate of 23.7 BPM. ISIP 2137 psi
01/10/07	5005-5017'	**Frac D1 sands as follows:** 96681# 20/40 sand in 719 bbls Lightning 17 frac fluid. Treated @ avg press of 2033 psi w/avg rate of 23.3 BPM. ISIP 2270 psi
01/10/07	5005-5017'	**Frac D1 sands as follows:** 96681# 20/40 sand in 719 bbls Lightning 17 frac fluid. Treated @ avg press of 2033 psi w/avg rate of 23.3 BPM. ISIP 2270 psi
01/10/07	4521-4527'	**Frac GB6 sands as follows:** 15066# 20/40 sand in 261 bbls Lightning 17 frac fluid. Treated @ avg press of 2224 psi w/avg rate of 23.4 BPM. ISIP 1968 psi
01/10/07	4427-4442'	**Frac GB2 sands as follows:** 79836# 20/40 sand in 620 bbls Lightning 17 frac fluid. Treated @ avg press of 2202 psi w/avg rate of 23.4 BPM. ISIP 2286 psi

PERFORATION RECORD

5957-5966'	4 JSPF	36 holes
5918-5925'	4 JSPF	28 holes
5890-5897'	4 JSPF	28 holes
5243-5249'	4 JSPF	24 holes
5181-5188'	4 JSPF	28 holes
5005-5017'	4 JSPF	48 holes
4521-4527'	4 JSPF	36 holes
4427-4442'	4 JSPF	60 holes

NEWFIELD

Wells Draw Fed. I-5-9-16

1978'FNL & 1388' FEL

1210' FNL & 1270' FEL

SW/NE Section 5-T9S-R16E

Duchesne Co, Utah

API #43-013-33521; Lease # UTU-30096

TW 01/30/08

ATTACHMENT

Wells Draw Federal X-33-8-16

Spud Date: 12/04/07
Put on Production: 02/18/2008

GL: 5749' KB: 5761'

Initial Production: BOPD, MCFD, BWPD

Wellbore Diagram

SURFACE CASING

CSG SIZE 8-5/8"
GRADE J-55
WEIGHT 24#
LENGTH 7 jts (305.01')
DEPTH LANDED: 316.86' KB
HOLE SIZE 12-1/4"
CEMENT DATA 1- 160, sxs Class "G" cmt, est 7 bbls cmt to surf

PRODUCTION CASING

CSG SIZE 5-1/2"
GRADE J-55
WEIGHT 15 5#
LENGTH 150 jts (6474.61')
DEPTH LANDED 6487.86' KB
HOLE SIZE 7-7/8"
CEMENT DATA: 350 sxs Prem Lite II mixed & 450 sxs 50/50 POZ.

TUBING

SIZE/GRADE/WT : 2-7/8" / J-55 / 6 5#
NO OF JOINTS 196 jts (6155 9')
TUBING ANCHOR 6155 9' KB
NO OF JOINTS 2 jts (62 8')
SEATING NIPPLE 2-7/8" (1 10')
SN LANDED AT 6221.6' KB
NO OF JOINTS: 2 jts (62 8')
TOTAL STRING LENGTH: EOT @ 6286' KB

SUCKER RODS

POLISHED ROD 1-1/2" x 26' SM polished rods
SUCKER RODS 2- 8' x 7/8" pony rods, 1- 8' x 7/8" pony rod, 244- 7/8" guided rods, 4- 1 ½" weight bars
PUMP SIZE CDI 2-1/2" x 1-3/4" x 16' X 20' 'RHAC
STROKE LENGTH 122"
PUMP SPEED, SPM 6

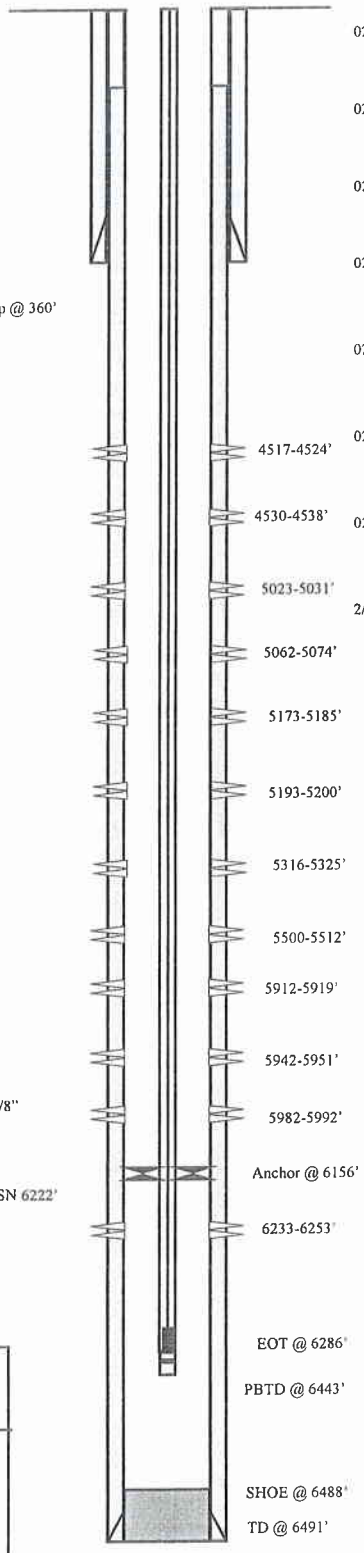

FRAC JOB

02/06/08	6233-6253'	**Frac CP5 sands as follows:** 15006# 20/40 sand in 304 bbls Lightning 17 frac fluid Treated @ avg press of 2336 psi w/avg rate of 23 4 BPM ISIP 2279 psi
02/07/08	5912-5992'	**Frac CP.5, CP1, & CP2 sands as follows:** 45382# 20/40 sand in 586 bbl Lightning 17 frac fluid Treated @ avg press of 2186 psi w/avg rate of 23 1 BPM ISIP 2070 psi
02/07/08	5500-5512'	**Frac A3 sands as follows:** 70358# 20/40 sand in 592 bbls Lightning 17 frac fluid Treated @ avg press of 1965 psi w/avg rate of 23 1 BPM ISIP 2133 psi
02/07/08	5316-5325'	**Frac B2 sands as follows:** 45093# 20/40 sand in 465 bbls Lightning 17 frac fluid Treated @ avg press of 2141 psi w/avg rate of 23 1 BPM ISIP 2327 psi
02/07/08	5173-5200'	**Frac C sands as follows:** 49946# 20/40 sand in 456 bbls Lightning 17 frac fluid Treated @ avg press of 2217 psi w/avg rate of 23 3 BPM ISIP 2164 psi
02/08/08	5023-5074'	**Frac D1 & D2 sands as follows:** 110606# 20/40 sand in 807 bbls Lightning 17 frac fluid Treated @ avg press of 2197 psi w/avg rate of 23 3 BPM ISIP 2338 psi
02/08/08	4517-4538'	**Frac GB6 sands as follows:** 44756# 20/40 sand in 429 bbls Lightning 17 frac fluid Treated @ avg press of 1858 psi w/avg rate of 23 5 BPM ISIP 2075 psi
2/10/2010		Downhole pump maintenance Updated rod and tubing detail

PERFORATION RECORD

6247-6253'	4 JSPF	24 holes
6233-6240'	4 JSPF	28 holes
5982-5992'	4 JSPF	40 holes
5942-5951'	4 JSPF	36 holes
5912-5919'	4 JSPF	28 holes
5500-5512'	4 JSPF	48 holes
5316-5325'	4 JSPF	36 holes
5193-5200'	4 JSPF	28 holes
5173-5185'	4 JSPF	48 holes
5062-5074'	4 JSPF	48 holes
5023-5031'	4 JSPF	32 holes
4530-4538'	4 JSPF	32 holes
4517-4524'	4 JSPF	28 holes

NEWFIELD

Wells Draw Fed. X-33-8-16

669'FNL & 818' FWL
NW/NW Section 4-T9S-R16E
15'FSL & 1310' FWL
NW/NW Section 33-T8S-R16E
Duchesne Co, Utah
API #43-013-33515; Lease # UTU-49092

ML 4/23/2010

ATTACHMENT F

1 of 4

Multi-Chem Group, LLC
Multi-Chem Analytical Laboratory
1553 East Highway 40
Vernal, UT 84078

multi-chem®

Water Analysis Report

Production Company: **NEWFIELD PRODUCTION (158)**
Well Name: **south wells draw IF**
Sample Point: **tank**
Sample Date: **1 /7 /2011**
Sales Rep: **Monty Frost**
Lab Tech: **Peter Poulsen**

Sample ID: **WA-53132**

Sample Specifics

Test Date:	1/24/2011
Temperature (°F):	100
Sample Pressure (psig):	
Specific Gravity (g/cm³):	1.0006
pH:	7.25
Turbidity (NTU):	-
Calculated T.D.S. (mg/L)	5345
Molar Conductivity (µS/cm):	8099
Resitivity (Mohm):	1.2347

Analysis @ Properties in Sample Specifics

Cations	mg/L	Anions	mg/L
Calcium (Ca):	31.62	Chloride (Cl):	2500.00
Magnesium (Mg):	15.12	Sulfate (SO_4):	88.00
Barium (Ba):	8.18	Dissolved CO_2:	-
Strontium (Sr):	-	Bicarbonate (HCO_3):	805.00
Sodium (Na):	1897.00	Carbonate (CO_3):	-
Potassium (K):	-	H_2S:	-
Iron (Fe):	0.12	Phosphate (PO_4):	-
Manganese (Mn):	0.02	Silica (SiO_2):	-
Lithium (Li):	-	Fluoride (F):	-
Aluminum (Al):	-	Nitrate (NO_3):	-
Ammonia NH_3:	-	Lead (Pb):	-
		Zinc (Zn):	-
		Bromine (Br):	-
		Boron (B):	-

Scale Values @ Test Conditions - Potential Amount of Scale in lb/1000bbl

Test Conditions		Calcium Carbonate $CaCO_3$		Gypsum $CaSO_4 \cdot 2H_2O$		Calcium Sulfate $CaSO_4$		Strontium Sulfate $SrSO_4$		Barium Sulfate $BaSO_4$		Calculated CO_2
Temp °F	Gauge Press. psi	Sat Index	Scale	Sat Index	Scale	Sat Index	Scale	Sat Index	Scale	Sat Index	Scale	psi
100		*0.76*	*-0.74*	*0.00*	*-1872.00*	*0.00*	*-1990.00*	-	-	*28.50*	*13.37*	*1.25*
80	0	0.55	-1.54	0.00	-5.19	0.00	-2126.70	-	-	43.03	13.55	0.57
100	0	0.76	-0.74	0.00	-3.25	0.00	-1990.00	-	-	28.50	13.37	0.70
120	0	0.98	-0.06	0.00	-1.85	0.00	-1792.60	-	-	19.32	13.12	0.79
140	0	1.22	0.57	0.00	-0.80	0.00	-1562.50	-	-	13.37	12.78	0.89
160	0	1.47	1.15	0.00	0.01	0.00	-1323.40	-	-	9.43	12.32	1.01
180	0	1.72	1.70	0.00	0.63	0.01	-1092.60	-	-	6.77	11.71	1.11
200	0	1.96	2.21	0.01	1.12	0.01	-881.65	-	-	4.94	10.90	1.13
220	2.51	2.16	2.69	0.01	1.48	0.01	-703.26	-	-	3.59	9.80	1.14
240	10.3	2.34	3.11	0.01	1.72	0.02	-544.83	-	-	2.67	8.45	1.17
260	20.76	2.48	3.47	0.01	1.84	0.02	-413.16	-	-	2.01	6.73	1.19
280	34.54	2.59	3.76	0.01	1.86	0.04	-306.03	-	-	1.53	4.58	1.22
300	52.34	2.65	3.95	0.01	1.79	0.06	-220.34	-	-	1.17	1.91	1.25

Conclusions:

Calcium Carbonate scale is indicated. See graph for appropriate temperature ranges.
Gypsum Scaling Index is negative from 80°F to 300°F
Calcium Sulfate Scaling Index is negative from 80°F to 300°F
Strontium Sulfate scaling was not evaluated
Barium Sulfate scale is indicated at all temps from 80°F to 300°F

Notes:

Multi-Chem Group, LLC
Multi-Chem Analytical Laboratory
1553 East Highway 40
Vernal, UT 84078

multi-chem®

Scale Prediction Graphs

Well Name: **south wells draw IF**

Sample ID: **WA-53132**

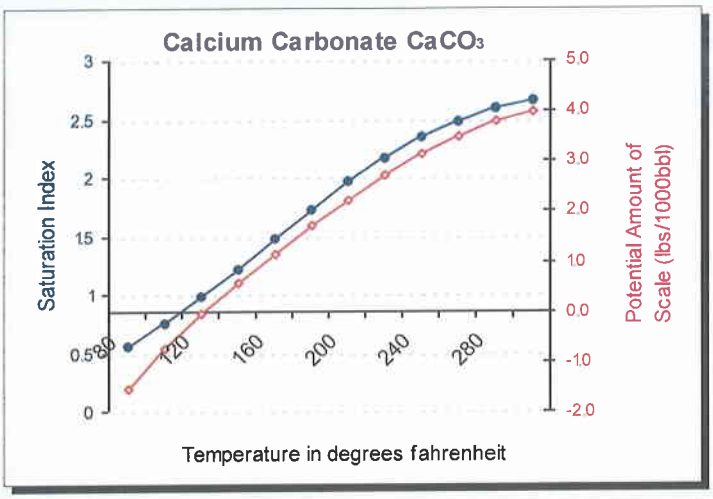

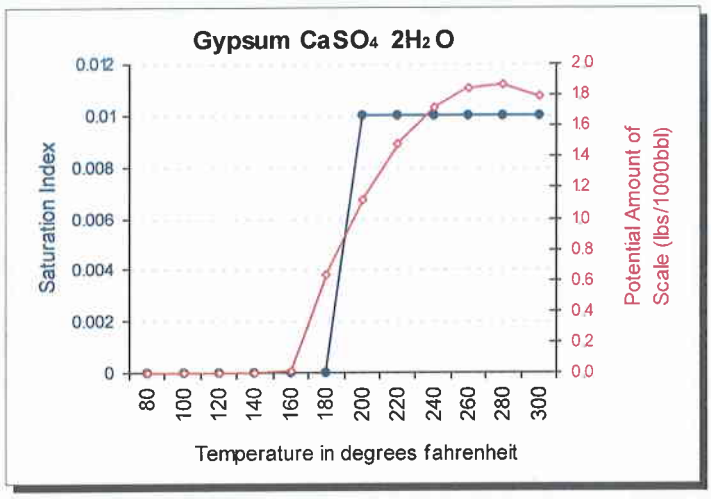

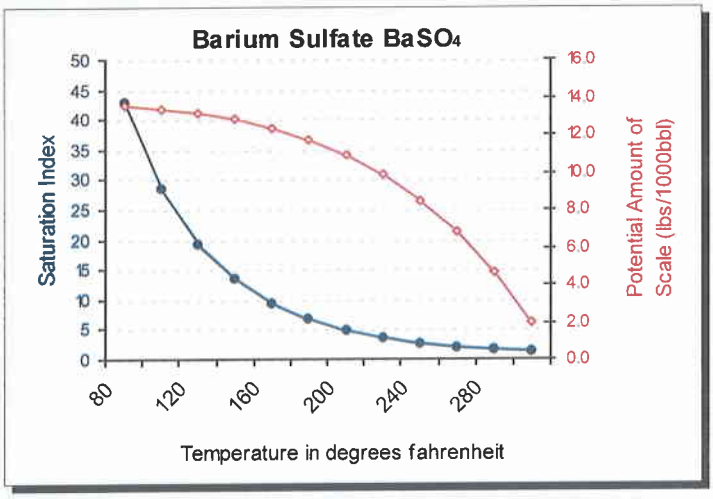

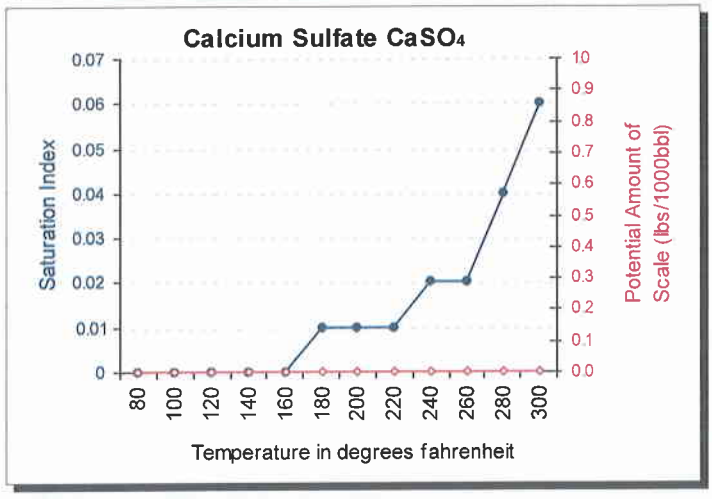

ATTACHMENT F

3 of 4

Multi-Chem Group, LLC
Multi-Chem Analytical Laboratory
1553 East Highway 40
Vernal, UT 84078

multi-chem

Water Analysis Report

Production Company: **NEWFIELD PRODUCTION (158)**
Well Name: **Federal 13-4-9-16**
Sample Date: **1/12/2011**
Sales Rep: **Monty Frost**
Lab Tech: **John Keel**

Sample ID: **WA-52907**

Sample Specifics

Test Date:	##################
Temperature (°F):	100
Sample Pressure (psig):	
Specific Gravity (g/cm³):	1.0040
pH:	8.35
Turbidity (NTU):	-
Calculated T.D.S. (mg/L):	8497
Molar Conductivity (µS/cm):	12875
Resitivity (Mohm):	0.7767

Analysis @ Properties in Sample Specifics

Cations	mg/L	Anions	mg/L
Calcium (Ca):	8.00	Chloride (Cl):	4000.00
Magnesium (Mg):	1.60	Sulfate (SO_4):	87.00
Barium (Ba):	15.60	Dissolved CO :	-
Strontium (Sr):		- Bicarbonate (HCO_3):	1293.00
Sodium (Na):	3092.00	Carbonate (CO_3):	-
Potassium (K):		- H_2S:	-
Iron (Fe):	0.05	Phosphate (PO_4):	-
Manganese (Mn):	0.02	Silica (SiO_2):	-
Lithium (Li):		- Fluoride (F):	-
Aluminum (Al):		- Nitrate (NO_3):	-
Ammonia NH_3:		- Lead (Pb):	-
		Zinc (Zn):	-
		Bromine (Br):	-
		Boron (B):	-

Scale Values @ Test Conditions - Potential Amount of Scale in lb/1000bbl

Test Conditions		Calcium Carbonate $CaCO_3$		Gypsum $CaSO_4 \bullet 2H_2O$		Calcium Sulfate $CaSO_4$		Strontium Sulfate $SrSO_4$		Barium Sulfate $BaSO_4$		Calculated CO_2
Temp °F	Gauge Press. psi	Sat Index	Scale	Sat Index	Scale	Sat Index	Scale	Sat Index	Scale	Sat Index	Scale	psi
100		*2.81*	*8.68*	*0.00*	*-2221.20*	*0.00*	*-2346.40*	-	-	*40.25*	*25.75*	*0.14*
80	0	2.16	7.23	0.00	-6.39	0.00	-2499.50	-	-	60.94	26.01	0.07
100	0	2.81	8.68	0.00	-2.96	0.00	-2346.40	-	-	40.25	25.75	0.09
120	0	3.40	9.18	0.00	-0.98	0.00	-2122.20	-	-	27.20	25.39	0.10
140	0	3.93	9.22	0.00	0.12	0.00	-1858.70	-	-	18.76	24.88	0.11
160	0	4.35	9.04	0.00	0.67	0.00	-1582.70	-	-	13.19	24.20	0.12
180	0	4.62	8.81	0.00	0.89	0.00	-1314.80	-	-	9.43	23.30	0.13
200	0	4.73	8.62	0.00	0.94	0.00	-1068.80	-	-	6.84	22.10	0.13
220	2.51	4.66	8.54	0.00	0.89	0.00	-861.27	-	-	4.92	20.45	0.13
240	10.3	4.49	8.48	0.00	0.80	0.00	-675.46	-	-	3.64	18.40	0.14
260	20.76	4.22	8.44	0.00	0.67	0.01	-520.83	-	-	2.72	15.80	0.14
280	34.54	3.88	8.31	0.00	0.49	0.01	-394.87	-	-	2.04	12.50	0.14
300	52.34	3.50	8.03	0.00	0.27	0.01	-294.07	-	-	1.53	8.36	0.14

Conclusions:

Calcium Carbonate scale is indicated at all temps from 80°F to 300°F

Gypsum Scaling Index is negative from 80°F to 300°F

Notes:

Calcium Sulfate Scaling Index is negative from 80°F to 300°F
Strontium Sulfate scaling was not evaluated
Barium Sulfate scale is indicated at all temps from 80°F to 300°F

ATTACHMENT F

4 of 4

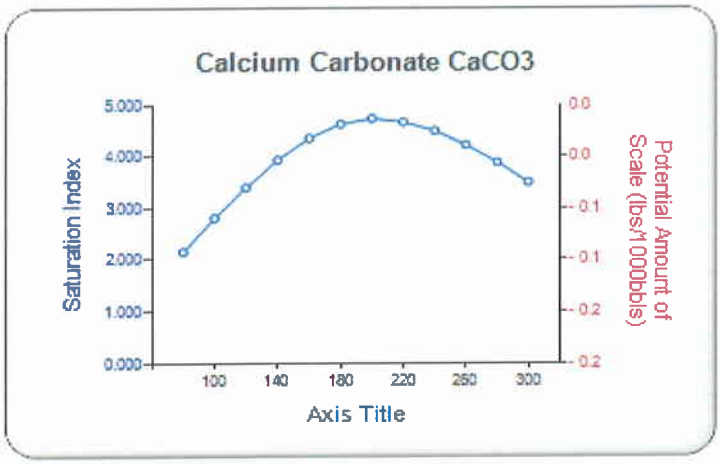

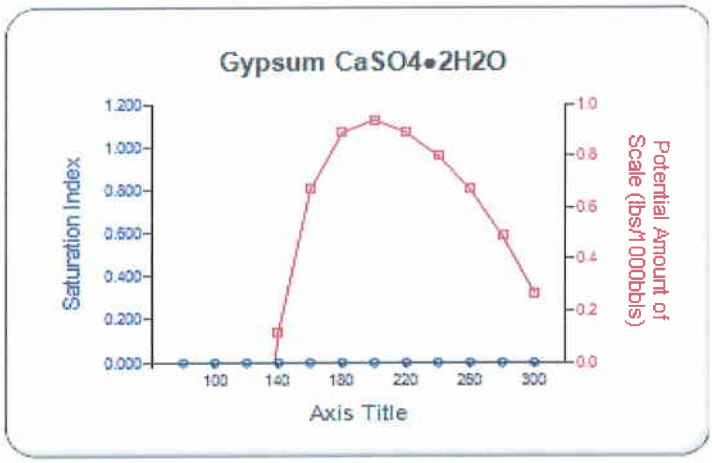

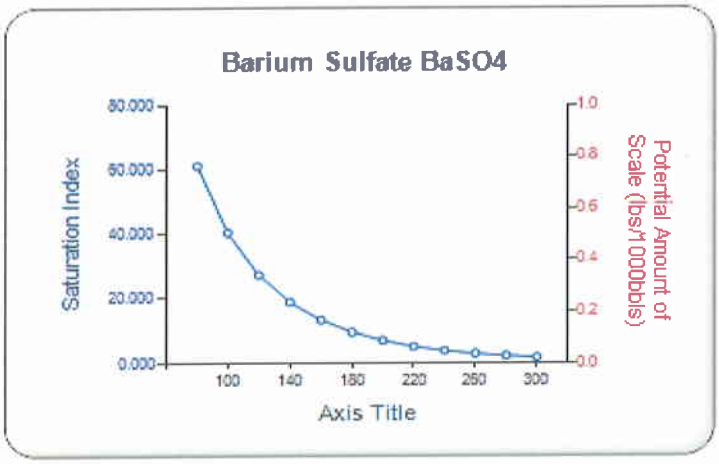

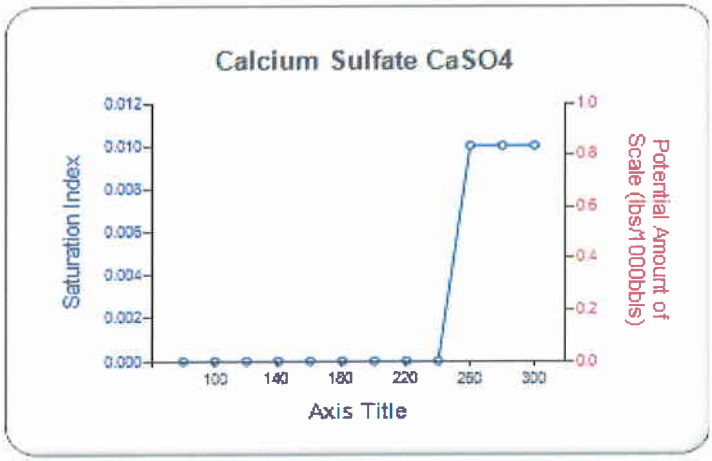

Attachment "G"

Monument Federal #13-4-9-16
Proposed Maximum Injection Pressure

Frac Interval (feet) Top	Bottom	Avg. Depth (feet)	ISIP (psi)	Calculated Frac Gradient (psi/ft)	Pmax
5281	5345	5313	1920	0.80	1886 ←
5741	5821	5781	2400	0.85	2363
5120	5136	5128	2140	0.85	2107
4390	4400	4395	2140	0.92	2111
				Minimum	1886

Calculation of Maximum Surface Injection Pressure
Pmax = (Frac Grad -(0.433*1.015)) x Depth of Top Perf
where pressure gradient for the fresh water is .433 psi/ft and
specific gravity of the injected water is 1.015.

Frac Gradient = (ISIP +(0.433*Top Perf.))/Top Perf.

Please note: These are existing perforations; additional perforations may be added during the actual conversion procedure.

ATTACHMENT G-1

EQUITABLE RESOURCES ENERGY COMPANY

DAILY COMPLETION & WORKOVER REPORT

Date: 1 . 17 . 97

Well Name & No. MONUMENT FED. 13-4-9-16 Field MONUMENT BUTTE State UT.

Sec. 4 Twp. 9 S Rng. 16 E County DUCHESNE Grnd Level 5761 Fill ____ Date ____

Td 6000 Pbtd. 5924 Kbm. 10 Grade J-55 Thrd. 8 RD. Wt. 6.5 Rng. 2

Tbg. Size 2 7/8 Type EUE Grade ____ Thrd. ____ Wt. ____ Rng. ____

Thg Size ____ Type ____ Grade J-55 Thrd. 8 RD Wt. 15.5 Rng. 3

Csg Size 5 1/2 Type LT&C Grade ____ Thrd. ____ Wt. ____ Rng. ____

Csg. Size ____ Type ____ Grade ____ Thrd. ____ Wt. ____ Rng. ____

Liner Size ____ Type ____

Perferations / Open Hole: ____

Reason For Job NEW COMPLETION Present Operation ____

Csg. Press. ____ Tbg. Press. ____ Weather ____

TIME	DESCRIPTION OF OPERATIONS & COMMENTS
	DRESS UP LOC, SET RIG ANCHORS, SET RIG PUMP + TANKS
0700	MIRU CANNON WELL SERVICE RIG # 2
	NU 5-M WELL HEAD, NU BOP.
	TIH W/ 4 3/4 BIT, CSG. SCRAPPER + 191 JTS. 2 7/8 TBG.
	TAG PBTD AT 5924' KB
	CIRCULATE HOLE CLEAN W/ 140 BBL. 2% KCL WATER.
	PRESS. TEST BOP + CAS. TO 1000 PSI, OK.
	TOOH W/ TBG. + TOOLS.

Daily Costs: ____ Cumulative Costs: ____ Load To Recover: ____ bbls. Of WATER ____ bbls. Of ____

Completion Rig	$ 1440	Tbg. ___ Jts. ___ Ft.	$	Chemicals	$
Bop Rental	$ 170	Rods ___ Jts. ___ Ft.	$	Cementing	$
Tank Rental	$ 90	Ponies & Pups	$	Rig Anchors	$ 850
Hot Oiler	$ 320	Down Hole Pump	$	Cats & Graders	$ 349
Completion Fluid	$	Ta, Ma, sn,	$		$
Log & perferate	$	Well Head Equip	$		$
Stimulation	$	Valves & Fittings	$		$
Contract Labor	$	Treater / Separater	$		$
Down Hole Tools (rental)	$	Tanks	$		$
Equipment Rental	$ 90	Pump Unit / Engines	$		$
Transportation	$ 229	D H Tools (Puchase)	$	Supervision	$

Operations Supervisor Dale Griffin

JAN-19-97 SUN 8:14

ATTACHMENT G-1
2 of 15

EQUITABLE RESOURCES ENERGY COMPANY

DAILY COMPLETION & WORKOVER REPORT

Date: 1.18.97

Well Name & No. MONUMENT FED. 13-4-9-16 Field MONUMENT BUTT State U
Sec. 4 Twp. 9 S Rng. 16 E County DUCHESNE Fill Date
Td. 6000 Pbtd. 5924 Kbm. 10 Grnd. Level 5761
Tbg Size 1 1/2 Type EUE Grade J-55 Thrd 8 RD. Wt 6.5 Rng. 2
Tbg Size Type Grade Thrd. Wt Rng.
Csg. Size 5 1/2 Type LT&C Grade J-55 Thrd. 8 RD Wt 15.5 Rng. 3
Csg Size Type Grade Thrd. Wt Rng.
Liner Size Type Grade Thrd Wt Rng.

Perforations / Open Hole: 5281-86, 5308-17, 5328-45

Reason For Job NEW COMPLETION Present Operation
Csg. Press. Tbg Press. Weather +2° CLEAR

DESCRIPTION OF OPERATIONS & COMMENTS

TIME	
0700	RU CUTTER WIRE LINE TO RUN CBL + PERF.
	RUN CBL FROM 5906 'KB TO 400 ' KB.
	TOP OF CEMENT AT 785 ' KB.
	PERF. 5281-86, 5308-17, 5328-45 4-SPF
	TIH W/TS RBP, RETRIEVING TOOL, 2 7/8 X 4' SUB, HD PKR, 2 7/8 SEAT
	NIPPLE + 166 JTS. 2 7/8 TBG.
	SET BP AT 5294 'KB.
	SET PKR. AT 5221 'KB EOT AT 5229' KB
1330	SHUT WELL IN UNTILL 1-20-97

Daily Costs Cumulative Costs Load To Recover: bbls. Of WATER
bbls. Of

Completion Rig	$ 999	Tbg Jts. Ft.	$	Chemicals	$		
Bop Rental	$ 170	Rods Jts. Ft.	$	Cementing	$		
Tank Rental	$ 90	Ponies & Pups	$	Rig Anchors	$		
Hot Oiler	$	Down Hole Pump	$	Cats & Graders	$		
Completion Fluid	$	Ta, Ma, sn,	$		$		
Log & perforate	$ 6285	Well Head Equip.	$		$		
Stimulation	$	Valves & Fittings	$		$		
Contract Labor	$	Treater / Separater	$		$		
Down Hole Tools (rental)	$	Tanks	$		$		
Equipment Rental	$ 90	Pump Unit / Engines	$	Supervision	$		
Transportation	$	DH Tools (Puchase)	$				

Operations Supervisor Dale Griffin

EQUITABLE RESOURCES ENERGY COMPANY

DAILY COMPLETION & WORKOVER REPORT

Date: 1-20-97

Well Name & No. MONUMENT FED. 13-4-9-16 Field MONUMENT BUTTE State UT

Sec. 4 Twp. 9 S Rng. 16 E County DUCHESNE Fill ____ Date ____

Td. 6000 Pbtd 5924 Kbm 10 Grnd. Level 5761

Tbg Size 2 7/8 Type EUE Grade J-55 Thrd. 8 RD. Wt 6.5 Rng 2

Tbg Size ____ Type ____ Grade ____ Thrd. ____ Wt ____ Rng ____

Csg Size 5 1/2 Type LT&C Grade J-55 Thrd. 8 RD Wt 15.5 Rng 3

Csg Size ____ Type ____ Grade ____ Thrd. ____ Wt ____ Rng ____

Liner Size ____ Type ____ Grade ____ Thrd. ____ Wt ____ Rng ____

Perforations / Open Hole: 5281-86, 5308-17, 5328-45

Reason For Job NEW COMPLETION Present Operation ____

Csg. Press. ____ Tbg Press. ____ Weather ____

DESCRIPTION OF OPERATIONS & COMMENTS

TIME	
0700	RU BJ SERVICES & BREAK DOWN 5281-86
	REFER TO TREATMENT REPORT. USED 56 BBL. WATER
	RESET BP AT 5418' KB, EOT AT 5291' KB, PKR. AT 5283' KB.
	BREAK DOWN 5308-17, 5328-45
	REFER TO TREATMENT REPORT. USED 95 BBL. WATER.
	TOOH W/TBG., PKR. & RET. TOOL.
1700	SDIFD

Daily Costs: ____ Cumulative Costs: ____ Load To Recover: ____ bbls. Of WATER 137 bbls. Of ____

Completion Rig	$ 730	Tbg. ___ Jts. ___ Ft.	$ ____	Chemicals	$ ____
Bop Rental	$ 340	Rods ___ Jts ___ Ft.	$ ____	Cementing	$ ____
Tank Rental	$ 120	Ponies & Pups	$ ____	Rig Anchors	$ ____
Hot Oiler	$ ____	Down Hole Pump	$ ____	Cats & Graders	$ ____
Completion Fluid	$ ____	Ta, Ma, sn,	$ ____		$ ____
Log & perforate	$ ____	Well Head Equip.	$ ____		$ ____
Stimulation	$ 1810	Valves & Fittings	$ ____		$ ____
Contract Labor	$ ____	Treater / Separator	$ ____		$ ____
Down Hole Tools (rental)	$ ____	Tanks	$ ____		$ ____
Equipment Rental	$ 180	Pump Unit / Engines	$ ____	Supervision	$ ____
Transportation	$ ____	DH Tools (Puchase)	$ ____		

Operations Supervisor Dale Griffin

ATTACHMENT G-1

EQUITABLE RESOURCES ENERGY COMPANY

DAILY COMPLETION & WORKOVER REPORT

Date: 1.21.97

Well Name & No MONUMENT FED. 13-4-9-16 Field MONUMENT BUTTE

Sec. 4 Twp 9 S Rng 16 E County DUCHESNE State UT

Td 6000 Pbtd. 5924 Kbm 10 Grnd. Level 5761 Fill ____ Date ____

Tbg Size 2 7/8 Type EUE Grade J-55 Thrd. 8 RD. Wt 6.5 Rng. 2

Tbg. Size ____ Type ____ Grade ____ Thrd. ____ Wt ____ Rng. ____

Csg Size 5 1/2 Type LT&C Grade J-55 Thrd. 8 RD Wt 15.5 Rng. 3

Csg Size ____ Type ____ Grade ____ Thrd. ____ Wt ____ Rng. ____

Liner Size ____ Type ____ Grade ____ Thrd. ____ Wt ____ Rng. ____

Perforations / Open Hole: 5281-86, 5308-17, 5328-45

Reason For Job NEW COMPLETION Present Operation ____

Csg Press. ____ Tbg Press. ____ Weather ____

DESCRIPTION OF OPERATIONS & COMMENTS

TIME	
0600	RU BJ SERVICES & FRAC 5281-5345 REFER TO TREATMENT REPORT. USED 689 BBL. WATER.
0816	START FRAC
0843	END FRAC
0844	START FORCED CLOSURE FLOW BACK, .75 BPM REFER TO FLOW REPORT. FLOW BACK 214 BBL. WATER.
	TIH W/RETRIEVING TOOL, 2 3/8 X 4' SUB, HD PKR., SEAT NIPPLE AND 169 JTS. TBG.
	TAG SAND AT 5252' KB. CIRCULATE DOWN TO BP AT 5918' KB.
	SET PKR. AT 5221' KB.
	MADE 9 SWAB RUNS.
	RECOVERED 47 BBL. WATER W/TRACE OF SAND. GAS CUT.
	FINAL FLUID LEVEL 1500'
1730	SWIFD

Daily Costs ____ Cumulative Costs: ____ Load To Recover: 676 Bbls. Of WATER

____ Bbls. Of ____

Completion Rig	$ 1376	Tbg. ___ Jts. ___ Ft.	$ ____	Chemicals	$ ____
Bop Rental	$ 170	Rods ___ Jts. ___ Ft.	$ ____	Cementing	$ ____
Tank Rental	$ 90	Ponies & Pups	$ ____	Rig Anchors	$ ____
Hot Oiler	$ 1393	Down Hole Pump	$ ____	Cats & Graders	$ ____
Completion Fluid	$ 3427	Ta, Ma, sn,	$ ____		$ ____
Log & perforate	$ ____	Well Head Equip.	$ ____		$ ____
Stimulation	$ 31325	Valves & Fittings	$ ____		$ ____
Contract Labor	$ ____	Treater / Separater	$ ____		$ ____
Down Hole Tools (rental)	$ ____	Tanks	$ ____		$ ____
Equipment Rental	$ 90	Pump Unit / Engines	$ ____	Supervision	$ ____
Transportation	$ ____	D H Tools (Puchase)	$ ____		

Operations Supervisor Dale Griffin

-22-97 WED 22:34

ATTACHMENT G-1

5 of 15

EQUITABLE RESOURCES ENERGY COMPANY

DAILY COMPLETION & WORKOVER REPORT

Date: 1-22-97

ell Name & No MONUMENT FED. 13-4-9-16 Field MONUMENT BUTTE State UT.

c. 4 Twp 9 S. Rng. 16 E County DUCHESNE Fill Date

6000 Pbtd. 5924 Kbm 10 Grnd. Level 5761

g. Size 2 7/8 Type EUE Grade J-55 Thrd. 8 RD. Wt 6.5 Rng 2

g. Size Type Grade Thrd. Wt Rng

sg. Size 5 1/2 Type LT&C Grade J-55 Thrd. 8 RD Wt 15.5 Rng 3

sg. Size Type Grade Thrd Wt Rng

iner Size Type

erforations / Open Hole: 5281-86, 5302-17, 5328-45

Reason For Job NEW COMPLETION Present Operation

Csg. Press. 0 Tbg Press. 12 Weather

DESCRIPTION OF OPERATIONS & COMMENTS

TIME

0700 FLUID LEVEL AT SURFACE.

MADE 28 SWAB RUNS. REFER TO SWAB REPORT.

RECOVERED 31 BBL. OIL & 107 BBL. WATER, GOOD GAS & TRACE SAND.

OIL 50% LAST 3 RUNS, NO SAND LAST 7 RUNS.

FLUID LEVEL 2300' LAST 4 RUNS.

RELEASE PKR., TAG SAND AT 5409' KB.

CIRCULATE DOWN TO BP AT 5412' KB. RELEASE BP.

TOOH W/ TBG., PKR. & BP.

TIH W/ TBG. STRING

	LENGTH	DEPTH KB.
1-NOTCHED COLLAR 2.28	.40	5411.61
1-JT. 2 7/8 EUE J-55 8RD. 6.5#	29.50	5411.21
1-PERF. SUB 2 7/8 X 4'	4.20	5381.63
1-SEAT NIPPLE 2 7/8	1.10	5377.43
5-JTS. 2 7/8 EUE J-55 8RD. 6.5#	155.30	5376.33
1-TBG. ANCHOR 2 7/8 X 5 1/2 (TBCO)	2.75	5221.03
168-JTS. 2 7/8 EUE J-55 8RD. 6.5#	5208.28	5218.28
KB	10.00	

1130 SWIFD

Daily Costs Cumulative Costs: Load To Recover: 569 bbls. Of WATER

bbls. Of

Completion Rig	$ 1704	Tbg. Jts. Ft.	$	Chemicals	$
Bop Rental	$ 170	Rods Jts. Ft.	$	Cementing	$
Tank Rental	$ 90	Ponies & Pups	$	Rig Anchors	$
Hot Oiler	$	Down Hole Pump	$	Cats & Graders	$
Completion Fluid	$	Ta, Ma, sn,	$		$
Log & perforate	$	Well Head Equip.	$		$
Stimulation	$	Valves & Fittings	$		$
Contract Labor	$	Treater / Separater	$		$
Down Hole Tools (rental)	$	Tanks	$		$
Equipment Rental	$ 90	Pump Unit / Engines	$	Supervision	$
Transportation	$	D H Tools (Puchase)	$		

Operations Supervisor Dale Griffin

ATTACHMENT G-1

EQUITABLE RESOURCES ENERGY COMPANY

DAILY COMPLETION & WORKOVER REPORT

Date: 1.23.97

Well Name & No. MONUMENT FED. 13-4-9-16 Field MONUMENT BUTTE
Sec. 4 Twp. 9 S Rng 16 E County DUCHESNE State UT.
Td 6000 Pbtd 5924 Kbm 10 Grnd. Level 5761 Fill Date
Tbg Size 1 1/2 Type EUE Grade J-55 Thrd. 8 RD. Wt 6.5 Rng 2
Tbg Size Type Grade Thrd. Wt Rng
Csg. Size 5 1/2 Type LT&C Grade J-55 Thrd. 8 RD Wt 15.5 Rng 3
Csg. Size Type Grade Thrd. Wt Rng
Liner Size Type Grade Thrd. Wt Rng

Perforations / Open Hole: 5281-86, 5308-17, 5328-45

Reason For Job NEW COMPLETION Present Operation
Csg Press Tbg Press. Weather

TIME	DESCRIPTION OF OPERATIONS & COMMENTS
0700	SET TBG. ANCHOR W/12" TENSION.
	ND BOP. ND 3-M WELL HEAD, NU 3-M WELL HEAD.
	TIH W/ ROD STRING
	1- DHP, 2 1/2 X 1 1/2 X 16 RHAC W/SM PLUNGER (TRICO # 1217)
	1- PONY 7/8 X 2' W/2 1/2" GUIDE
	1- K-BAR 1 1/2" X 25'
	1- PONY 7/8 X 2' W/2 1/2" GUIDE
	212- 3/4" X 25' D-61 PLAIN
	1- 3/4 X 8' PONY
	1- 3/4" X 6' "
	1- POLISH ROD 1 1/4" X 22' SM
	PRESS. TEST DHP & TBG. TO 1000 PSI, OK.
	SHUT WELL IN
1300	RD/MO

Daily Costs Cumulative Costs: Load To Recover: 569 bbls. Of WATER
bbls. Of

Completion Rig	$ 836	Tbg. 184 Jts. 5913 Ft.	$ 14558	Chemicals	$
Bop Rental	$	Rods 212 Jts. 5200 Ft.	$	Cementing	$
Tank Rental	$ 90	Ponies & Pups	$	Rig Anchors	$
Hot Oiler	$ 235	Down Hole Pump	$	Cats & Graders	$
Completion Fluid	$	Ta, Ma, sn,	$		$
Log & perforate	$	Well Head Equip.	$		$
Stimulation	$	Valves & Fittings	$		$
Contract Labor	$ 197	Treater / Separater	$		$
Down Hole Tools (rental)	$	Tanks	$		$
Equipment Rental	$ 90	Pump Unit / Engines	$		$
Transportation	$	D H Tools (Puchase)	$	Supervision	$

Operations Supervisor Dale Griffin

ATTACHMENT G-1

EQUITABLE RESOURCES ENERGY COMPANY

DAILY COMPLETION & WORKOVER REPORT

Date: 2.4.97

Well Name & No MONUMENT FED. 13-4-9-16 Field MONUMENT BUTT.
Sec. 4 Twp. 9 S Rng. 16 E County DUCHESNE State U
Td. 6000 Pbtd 5924 Kbm. 10 Grnd. Level 5761 Fill Date
Tbg. Size 2 7/8 Type EUE Grade J-55 Thrd. 8 RD. Wt 6.5 Rng 2
Tbg. Size Type Grade Thrd. Wt Rng
Csg Size 5 1/2 Type LT+C Grade J-55 Thrd. 8 RD Wt 15.5 Rng 3
Csg Size Type Grade Thrd. Wt. Rng
Liner Size Type Grade Thrd. Wt Rng

Perferations / Open Hole 5281-86, 5328-11, 5328-45

Reason For Job NEW COMPLETION Present Operation INITIAL PRODUCTION
Csg Press. Tbg Press. Weather

TIME	DESCRIPTION OF OPERATIONS & COMMENTS
1630	START WELL PUMPING
	5 1/4 SPM
	99" STROKE
	PUMP UNIT: AMERICAN, 320-305-100
	S/N T30F100-4-3065 (FROM: GANE)
	ENGINE: AJAX: EA-30 S/N 74503 (FROM: A.F. T-5A)
	TANKS: NATCO, 12'X20' 400 BBL. W/ BURNERS, CATWALK + STAIRS. INSULATED.
	S/N 8D22401-13 (FROM: NATCO)
	S/N 8D22401-12 (FROM: NATCO)
	DRAIN TANK: 12'X5' 100 BBL. OPEN TOP (FROM: W.E. MACHINE)
	TREATER: NATCO, 6X15 100 PSI WP DATE 3-77
	S/N T-6450001-01 (FROM: NATCO)
	PUMPER: PAT WISENER

Daily Costs: Cumulative Costs: Load To Recover: 569 bbls. Of WATER
bbls. Of

Completion Rig	$	Tbg. Jts. Ft.	$	Chemicals	
Bop Rental	$	Rods Jts. Ft.	$	Cementing	
Tank Rental	$	Ponies & Pups	$	Rig Anchors	$
Hot Oiler	$	Down Hole Pump	$	Cats & Graders	$
Completion Fluid	$	Ta, Ma, sn,	$	INSULATE	$
Log & perferate	$	Well Head Equip.	$		$
Stimulation	$	Valves & Fittings	$		$
Contract Labor	$ 13,189	Treater / Separater	$		$
Down Hole Tools (rental)	$	Tanks	$ 16,400		$
Equipment Rental	$	Pump Unit / Engines	$		
Transportation	$	D H Tools (Puchase)	$	Supervision	

Operations Supervisor Dale G. Yi

NEWFIELD

ATTACHMENT G-1

8 of 15

DAILY RE-COMPLETION REPORT

WELL NAME: MF 13-4-9-16 **Report Date:** 2-5-05 **Re-completion Day:** 01

Present Operation: Re-completion **Rig:** NC #1

WELL STATUS

Surf Csg: 8 5/8 @ 263' **Prod Csg:** 5 1/2 **Wt:** 15.5# @ 5969' **Csg PBTD:** 5924'

Tbg: **Size:** 2-7/8" **Wt:** 6.5# **Grd:** N-80 **Pkr/EOT @:** 3003' **BP/Sand PBTD:** 5891'

PERFORATION RECORD

Zone	Perfs	SPF/#shots	Zone	Perfs	SPF/#shots
			A	5328- 45'	4/68
A	5281- 86'	4/20			
A	5308- 17'	4/36			

CHRONOLOGICAL OPERATIONS

Date Work Performed: 2-4-05 **SITP:** **SICP:**

MIRU NC#1. Unhang head. Unseat rod pump. D&M hot oiler flushed rod w/ 50 bbls of wtr. Soft seat rod pump. Fill tbg w/ 20 bbls of wtr. Pressure test to 3000 psi. Unseat rod pump. TOH w/ rods. LD rod pump. ND WH. Release TA. NU Graco BOP. TOH w/ production tbg. Talley, PU & RIH w/ 4 3/4" bit, 5 1/2" csg scraper & 183 jts of 2 7/8 N-80 tbg. Tagged fill @ 5891'. TOH w/ 90 jts tbg. EOT 3003'. SIFN w/ est 70 BWTR.

Starting fluid load to be recovered: 0 **Starting oil rec to date:**

Fluid lost/recovered today: 70 **Oil lost/recovered today:**

Ending fluid to be recovered: 70 **Cum oil recovered:**

IFL: **FFL:** **FTP:** **Choke:** **Final Fluid Rate:** **Final oil cut:**

TUBING DETAIL AS PULLED	ROD DETAIL AS PULLED	COSTS	
KB 10.00'	1-1/4" x 22' Polish rod	NC#1	$3,009
169 jts J-55 tbg (5240.71')	1- 6' x 3/4" pony rod	Liddell trucking	$1,300
TA 2.80' @ 5250.71'	90 - 3/4" guided rods	D& M hot oil	$375
3 jts J-55 tbg (94.10')	107 - 3/4" plain rods	RNI trucking	$750
SN 1.10' @ 5347.61'	10 - 3/4" guided rods	"CDI" rod pump repair	$1,300
1 jt J-55 tbg (29.58')	6 - 1-1/2" wt bars	"CDI" TA repair	$400
NC 0.40'	2-1/2"x1-1/2"x12'x16' RHAC	Graco BOP studs/bolts	$1,475
EOT @ 5378.69'	Axelson	NPC trucking	$300
		NPC Supervisor	$300
		DAILY COST:	$9,209
		TOTAL WELL COST:	$9,209

Completion supervisor: Orson Barney

NEWFIELD

ATTACHMENT G-1

9 of 15

DAILY RE-COMPLETION REPORT

WELL NAME: MF 13-4-9-16 **Report Date:** 2-8-05 **Re-completion Day:** 2

Present Operation: Re-completion **Rig:** NC #1

WELL STATUS

Surf Csg:	8 5/8	@	263'	Prod Csg:	5 1/2	Wt:	15.5#	@	5969'	Csg PBTD:	5924'
Tbg:	Size:	2-7/8"	Wt:	6.5#	Grd:	N-80	Pkr/EOT @:		5040'	BP/Sand PBTD:	5891'

PERFORATION RECORD

Zone	Perfs	SPF/#shots	Zone	Perfs	SPF/#shots
			A	5328- 45'	4/68
B1	5120-25'	4/20	CP.5	5741- 51'	4/40
B1	5130-36'	4/24	CP1	5808- 11'	4/12
A	5281- 86'	4/20	CP1	5816-21'	4/20
A	5308- 17'	4/36			

CHRONOLOGICAL OPERATIONS

Date Work Performed: 2-7-05 **SITP:** Vacuum **SICP:** Vacuum

Well on vacuum. Hot oiler pumped 30 bbls of wtr down csg. TOH w/ tbg & bit & scraper from 3003'. RU Patterson WL & perforate: CP1 sands: 5816-21', 5808- 11'. CP.5 sands: 5741- 51'. B1 sands: 5130- 36', 5120- 25'. All 4 SPF, 39' total (116 holes). RD Patterson WL. PU & TIH w/ 5 1/2" TS plug, Ret head, 6' X 2 3/8 sub, 5 1/2" HD pkr & 156 jts of 2 7/8 N-80 tbg. Set plug @ 5040'. RU pumplines & fill csg w/ 43 bbls of wtr. Pressure test to 2500 psi. Set pkr & test tools. Release pkr & plug. Leave tools hanging @ 5040'.

SIFN w/ est 143 BWTR.

Starting fluid load to be recovered: 70 **Starting oil rec to date:**

Fluid lost/recovered today: 73 **Oil lost/recovered today:**

Ending fluid to be recovered: 143 **Cum oil recovered:**

IFL: **FFL:** **FTP:** **Choke:** **Final Fluid Rate:** **Final oil cut:**

TUBING DETAIL AS PULLED	ROD DETAIL AS PULLED	COSTS	
KB 10.00'	1-1/4" x 22' Polish rod	NC#1	$3,699
169 jts J-55 tbg (5240.71')	1- 6' x 3/4" pony rod	Liddell trucking	$260
TA 2.80' @ 5250.71'	90 - 3/4" guided rods	Weatherford tools/serv	$650
3 jts J-55 tbg (94.10')	107 - 3/4" plain rods	Graco BOP	$145
SN 1.10' @ 5347.61'	10 - 3/4" guided rods	Patterson WL	$4,162
1 jt J-55 tbg (29.58')	6 - 1-1/2" wt bars	NPC Supervisor	$300
NC 0.40'	2-1/2"x1-1/2"x12'x16' RHAC		
EOT @ 5378.69'	Axelson		
		DAILY COST:	$9,216
		TOTAL WELL COST:	$18,425

Completion supervisor: Orson Barney

NEWFIELD

ATTACHMENT G-1

10 of 15

DAILY RE-COMPLETION REPORT

WELL NAME: MF 13-4-9-16 **Report Date:** 2-9-05 **Re-completion Day:** 3(a)

Present Operation: Re-completion **Rig:** NC #1

WELL STATUS

Surf Csg: 8 5/8 @ 263' **Prod Csg:** 5 1/2 **Wt:** 15.5# @ 5969' **Csg PBTD:** 5924'

Tbg: **Size:** 2-7/8" **Wt:** 6.5# **Grd:** N-80 **Pkr/EOT @:** **BP/Sand PBTD:** 5891'

PERFORATION RECORD

Zone	Perfs	SPF/#shots	Zone	Perfs	SPF/#shots
			A	5328- 45'	4/68
B1	5120-25'	4/20	CP.5	5741- 51'	4/40
B1	5130-36'	4/24	CP1	5808- 11'	4/12
A	5281- 86'	4/20	CP1	5816-21'	4/20
A	5308- 17'	4/36			

CHRONOLOGICAL OPERATIONS

Date Work Performed: 2-8-05 **SITP:** Vacuum **SICP:** Vacuum

Day 3(a)

Well on vacuum. Continue TIH w/ plug & pkr from 5040'. Set plug @ 5852'. Move up hole & install 10', 8' N-80 sub & frac vale. Set pkr @ 5691'. RU pumplines. Fill csg & hold pressure on annulus during frac. Used a total of 176 bbls of wtr. RU BJ Services to tbg. Frac CP1 & CP.5 zones w/ 49276# of 20/40 sand in 408 bbls of Lighting 17 fluid. Broke @ 3709 psi. Treated w/ ave pressure of 3750 psi @ ave rate of 14.3 BPM. ISIP 2400 psi. RD BJ Services. Begin immediate flowback on 12/64 choke @ 1 BPM. Flowed for 2 1/2 hrs & died. Rec.143 BTF (35% of total frac load). Pressure up on annulus & release pkr. Circulate well clean. TIH w/ tbg. Tagged sand @ 5836'. Circulate clean to plug @ 5852'. Lost a total of 16 bbls of wtr. Release plug. Move tools uphole. Est 600 BWTR.

See Day 3(b)

Starting fluid load to be recovered: 143 **Starting oil rec to date:**

Fluid lost/recovered today: 457 **Oil lost/recovered today:**

Ending fluid to be recovered: 600 **Cum oil recovered:**

IFL: **FFL:** **FTP:** **Choke:** **Final Fluid Rate:** **Final oil cut:**

STIMULATION DETAIL

Base Fluid used: Lightning 17 **Job Type:** Sand Frac

Company: BJ Services

Procedure or Equipment detail: CP1, CP.5 sands

PUMPED DOWN 2 7/8 N-80 TBG

4800 gals of pad.

3351 gals w/ 1-4 ppg 20/40 sand.

6690 gals w/ 4- 6.5 ppg 20/40 sand.

876 gals w/ 6.5 ppg 20/40 sand.

1419 gals flush.

Max TP: 3981 **Max Rate:** 14.4 BPM **Total fluid pmpd:** 408 Bbls

Avg TP: 3750 **Avg Rate:** 14.3 BPM **Total Prop pmpd:** 49,276#

ISIP: 2400 **5 min:** **10 min:** **FG:** .85

Completion supervisor: Orson Barney

COSTS

NC#1	$1,861
BJ Services CP1/CP.5	$20,685
Weatherford tools/serv	$1,984
Graco BOP	$145
Betts trucking & wtr	$640
NDSI trucking & wtr	$300
NDSI hot oiler	$140
NPC Supervision	$150
DAILY COST:	$25,905
TOTAL WELL COST:	$44,330

NEWFIELD

ATTACHMENT G-1

11 of 15

DAILY RE-COMPLETION REPORT

WELL NAME: MF 13-4-9-16 **Report Date:** 2-9-05 **Re-completion Day:** 3(b)

Present Operation: Re-completion **Rig:** NC #1

WELL STATUS

Surf Csg: 8 5/8 @ 263' Prod Csg: 5 1/2 Wt: 15.5# @ 5969' Csg PBTD: 5924'

Tbg: Size: 2-7/8" Wt: 6.5# Grd: N-80 Pkr/EOT @: BP/Sand PBTD: 5202'

PERFORATION RECORD

Zone	Perfs	SPF/#shots	Zone	Perfs	SPF/#shots
			A	5328- 45'	4/68
B1	5120-25'	4/20	CP.5	5741- 51'	4/40
B1	5130-36'	4/24	CP1	5808- 11'	4/12
A	5281- 86'	4/20	CP1	5816-21'	4/20
A	5308- 17'	4/36			

CHRONOLOGICAL OPERATIONS

Date Work Performed: 2-8-05 **SITP:** Vacuum **SICP:** Vacuum

Day 3(b)

Set plug @ 5202'. Set pkr & test tools to 2500 psi. TOH w/ tbg & pkr. Install BJ isolation tool. RU BJ Services. Frac B1 zones w/ 40,000# of 20/40 sand in 380 bbls of lighting 17 fluid. Broke @ 3124 psi. Treated w/ ave pressure of 2189 psi @ ave rate of 24.8 BPM. ISIP 2140 psi. RD BJ Services. Begin immediate flowback on 12/64 choke @ 1 BPM. Flowed for 2 1/2 hrs & died. Rec.128 BTF (34% of total frac load). RD isolation tool. SIFN w/ est 852 BWTR.

Starting fluid load to be recovered: 600 **Starting oil rec to date:**

Fluid lost/recovered today: 252 **Oil lost/recovered today:**

Ending fluid to be recovered: 852 **Cum oil recovered:**

IFL: **FFL:** **FTP:** **Choke:** **Final Fluid Rate:** **Final oil cut:**

STIMULATION DETAIL

Base Fluid used: Lightning 17 **Job Type:** Sand Frac

Company: BJ Services

Procedure or Equipment detail: B1 sands

PUMPED DOWN 5 1/2" 15.5# CSG

3200 gals of pad.

2500 gals w/ 1-5 ppg 20/40 sand.

5330 gals w/ 5- 8 ppg 20/40 sand.

4909 gals flush.

Max TP: 2640 **Max Rate:** 24.9 BPM **Total fluid pmpd:** 380 Bbls

Avg TP: 2189 **Avg Rate:** 24.8 BPM **Total Prop pmpd:** 40,088#

ISIP: 2400 **5 min:** **10 min:** **FG:** .85

Completion supervisor: Orson Barney

COSTS

NC#1	$1,861
BJ Services B1	$10,594
Weatherford tools/serv	$1,984
Graco BOP	$145
Betts trucking & wtr	$640
NDSI trucking & wtr	$300
Graco washington head	$475
NPC Supervision	$150
DAILY COST:	$16,149
TOTAL WELL COST:	$60,479

NEWFIELD

ATTACHMENT G-1

DAILY RE-COMPLETION REPORT

WELL NAME: MF 13-4-9-16 **Report Date:** 2-10-05 **Re-completion Day:** 4

Present Operation: Re-completion **Rig:** NC #1

WELL STATUS

Surf Csg: 8 5/8 @ 263' Prod Csg: 5 1/2 Wt: 15.5# @ 5969' Csg PBTD: 5924'

Tbg: Size: 2-7/8" Wt: 6.5# Grd: N-80 Pkr/EOT @: 4321' BP/Sand PBTD: 5202'

4500'

PERFORATION RECORD

Zone	Perfs	SPF/#shots	Zone	Perfs	SPF/#shots
GB 6	4390- 4400'	4/40	A	5328- 45'	4/68
B1	5120-25'	4/20	CP.5	5741- 51'	4/40
B1	5130-36'	4/24	CP1	5808- 11'	4/12
A	5281- 86'	4/20	CP1	5816-21'	4/20
A	5308- 17'	4/36			

CHRONOLOGICAL OPERATIONS

Date Work Performed: 2-9-05 **SITP:** _____ **SICP:** 375 psi

375 psi on well. Bleed off pressure. Flowed back 12 bbls of fluid. RU Patterson WL. Set 5 1/2" RBP (HE) @ 4500'. Perforate GB 6 zone: 4390- 4400', 4 SPF (10', 40 holes). RD Patterson WL. Install isolation tool. RU BJ Services. Frac GB 6 zones w/ 25,402# of 20/40 sand in 268 bbls of lighting 17 fluid. Broke @ 4086 psi. Treated w/ ave pressure of 2095 psi @ ave rate of 24.7 BPM. ISIP 2140 psi. RD BJ Services. Begin immediate flowback on 12/64 choke @ 1 BPM. Flowed for 2 hrs & died. Rec. 97 BTF (36% of total frac load). RD isolation tool. TIH w/ Retrieve head for HE plug & 134 jts 2 7/8 N-80 tbg. EOT @ 4321'. Circulate well clean. SIFN w/ est 1011 BWTR.

Starting fluid load to be recovered: 852 **Starting oil rec to date:** _____

Fluid lost/recovered today: 159 **Oil lost/recovered today:** _____

Ending fluid to be recovered: 1011 **Cum oil recovered:** _____

IFL: _____ **FFL:** _____ **FTP:** _____ **Choke:** _____ **Final Fluid Rate:** _____ **Final oil cut:** _____

STIMULATION DETAIL

Base Fluid used: Lightning 17 **Job Type:** Sand Frac

Company: BJ Services

Procedure or Equipment detail: GB6 sands

PUMPED DOWN 5 1/2" 15.5# CSG

2000 gals of pad.

1569 gals w/ 1-5 ppg 20/40 sand.

3361 gals w/ 5- 8 ppg 20/40 sand.

4305 gals flush.

Max TP: 2495 **Max Rate:** 24.9 BPM **Total fluid pmpd:** 268 Bbls

Avg TP: 2095 **Avg Rate:** 24.7 BPM **Total Prop pmpd:** 25,402#

ISIP: 1985 **5 min:** _____ **10 min:** _____ **FG:** .89

Completion supervisor: Orson Barney

COSTS

NC#1	$3,236
BJ Services B1	$11,457
Graco BOP	$145
Betts trucking & wtr	$640
Patterson WL	$2,657
NDSI hot oiler	$140
NPC Supervision	$300
DAILY COST:	$18,575
TOTAL WELL COST:	$79,054

NEWFIELD

ATTACHMENT G-1

13 of 15

DAILY RE-COMPLETION REPORT

WELL NAME: MF 13-4-9-16 **Report Date:** 2-11-05 **Re-completion Day:** 5

Present Operation: Re-completion **Rig:** NC #1

WELL STATUS

Surf Csg: 8 5/8 @ 263' Prod Csg: 5 1/2 Wt: 15.5# @ 5969' Csg PBTD: 5924'

Tbg: Size: 2-7/8" Wt: 6.5# Grd: N-80 Pkr/EOT @: 5861' BP/Sand PBTD: 5924'

PERFORATION RECORD

Zone	Perfs	SPF/#shots	Zone	Perfs	SPF/#shots
GB 6	4390- 4400'	4/40	A	5328- 45'	4/68
B1	5120-25'	4/20	CP.5	5741- 51'	4/40
B1	5130-36'	4/24	CP1	5808- 11'	4/12
A	5281- 86'	4/20	CP1	5816-21'	4/20
A	5308- 17'	4/36			

CHRONOLOGICAL OPERATIONS

Date Work Performed: 2-10-05 **SITP:** _____ **SICP:** 25 psi

Hot oiler steamed & thawed out BOP & tbg. 25 psi on well. Bleed off pressure. Flowed back 3 bbls of fluid. Continue TIH w/ tbg. Tagged sand @ 4491'. RU pumplines & washington head. Circulate clean down to HE plug @ 4500'. Release plug. TOH w/ tbg & plug. PU & TIH w/ retrieving head for TS plug & 159 jts of tbg. Tagged sand @ 5133'. C/O to plug @ 5202'. Release plug. TOH w/ tbg & plug. PU & TIH w/ 4 3/4" bit, Bit sub & tbg. Tagged fill @ 5884'. C/O to PBTD @ 5924'. Lost a total of 136 bbls of wtr to well. LD 2 jts of tbg. EOT @ 5861'. Drain pump & lines.
SIFN w/ est 1147 BWTR.

Starting fluid load to be recovered: 1011 **Starting oil rec to date:** _____
Fluid lost/recovered today: 136 **Oil lost/recovered today:** _____
Ending fluid to be recovered: 1147 **Cum oil recovered:** _____
IFL: _____ **FFL:** _____ **FTP:** _____ **Choke:** _____ **Final Fluid Rate:** _____ **Final oil cut:** _____

TUBING DETAIL AS PULLED	ROD DETAIL AS PULLED	COSTS	
KB 10.00'	1-1/4" x 22' Polish rod	NC#1	$3,419
169 jts J-55 tbg (5240.71')	1- 6' x 3/4" pony rod	NDSI trucking	$200
TA 2.80' @ 5250.71'	90 - 3/4" guided rods	Graco BOP	$145
3 jts J-55 tbg (94.10')	107 - 3/4" plain rods	Weatherford tools/serv	$636
SN 1.10' @ 5347.61'	10 - 3/4" guided rods	NDSI hot oiler	$235
1 jt J-55 tbg (29.58')	6 - 1-1/2" wt bars	NPC Supervision	$300
NC 0.40'	2-1/2"x1-1/2"x12'x16' RHAC		
EOT @ 5378.69'	Axelson		
		DAILY COST:	$4,935
		TOTAL WELL COST:	$83,989

Completion supervisor: Orson Barney

NEWFIELD

ATTACHMENT G-1

14 of 15

DAILY RE-COMPLETION REPORT

WELL NAME: MF 13-4-9-16 **Report Date:** 2-12-05 **Re-completion Day:** 6

Present Operation: Re-completion **Rig:** NC #1

WELL STATUS

Surf Csg: 8 5/8 @ 263' Prod Csg: 5 1/2 Wt: 15.5# @ 5969' Csg PBTD: 5924'

Tbg: Size: 2-7/8" Wt: 6.5# Grd: J-55 Pkr/EOT @: 1335' BP/Sand PBTD: 5924'

PERFORATION RECORD

Zone	Perfs	SPF/#shots	Zone	Perfs	SPF/#shots
GB 6	4390- 4400'	4/40	A	5328- 45'	4/68
B1	5120-25'	4/20	CP.5	5741- 51'	4/40
B1	5130-36'	4/24	CP1	5808- 11'	4/12
A	5281- 86'	4/20	CP1	5816-21'	4/20
A	5308- 17'	4/36			

CHRONOLOGICAL OPERATIONS

Date Work Performed: 2-11-05 **SITP:** 0 **SICP:** 0

Hot oiler steamed & thawed out BOP & tbg. RU swab equipment. IFL @ 1600'. Made 11 swab runs rec 93 BTF (est 88 BW & 5 BO) W/ light gas & no sand all day. FFL @ 2500' & FOC @ 15%. TIH W/ tbg. Tag PBTD @ 5924' (no new fill). Circ hole W/ clean wtr. Lost est 75 BW & rec 10 add'l BO. TOH & LD N-80 tbg and bit. TIH W/ BHA & production tbg to 1335'. SIFN W/ est 1134 BWTR.

Starting fluid load to be recovered: 1147 Starting oil rec to date: 0

Fluid lost/recovered today: 13 Oil lost/recovered today: 15

Ending fluid to be recovered: 1134 Cum oil recovered: 15

IFL: 1600' FFL: 2500' FTP: Choke: Final Fluid Rate: Final oil cut: 15%

TUBING DETAIL AS PULLED	ROD DETAIL AS PULLED	COSTS	
KB 10.00'	1-1/4" x 22' Polish rod	NC#1	$3,324
169 jts J-55 tbg (5240.71')	1- 6' x 3/4" pony rod	Graco BOP	$145
TA 2.80' @ 5250.71'	90 - 3/4" guided rods	Zubiate HO trk	$115
3 jts J-55 tbg (94.10')	107 - 3/4" plain rods	N-80 tbg (6300'/6 dys)	$2,646
SN 1.10' @ 5347.61'	10 - 3/4" guided rods	RNI wtr disposal	$500
1 jt J-55 tbg (29.58')	6 - 1-1/2" wt bars	NPC supervision	$300
NC 0.40'	2-1/2"x1-1/2"x12'x16' RHAC		
EOT @ 5378.69'	Axelson		
		DAILY COST:	$7,030
		TOTAL WELL COST:	$91,019

Completion supervisor: Gary Dietz

NEWFIELD ATTACHMENT G-1

15 of 15

DAILY RE-COMPLETION REPORT

WELL NAME: MF 13-4-9-16 **Report Date:** 2-15-05 **Re-completion Day:** 7

Present Operation: Re-completion **Rig:** NC #1

WELL STATUS

Surf Csg: 8 5/8 @ 263' **Prod Csg:** 5 1/2 **Wt:** 15.5# @ 5969' **Csg PBTD:** 5924'

Tbg: **Size:** 2-7/8" **Wt:** 6.5# **Grd:** J-55 **Pkr/EOT @:** 5835' **BP/Sand PBTD:** 5924'

PERFORATION RECORD

Zone	Perfs	SPF/#shots	Zone	Perfs	SPF/#shots
GB 6	4390- 4400'	4/40	A	5328- 45'	4/68
B1	5120-25'	4/20	CP.5	5741- 51'	4/40
B1	5130-36'	4/24	CP1	5808- 11'	4/12
A	5281- 86'	4/20	CP1	5816-21'	4/20
A	5308- 17'	4/36			

CHRONOLOGICAL OPERATIONS

Date Work Performed: 2-14-05 **SITP:** 100 **SICP:** 100

Hot oiler checked well to see if froze. No froze. 100 psi on well., Bleed off pressure. Continue TIH w/ production tbg. NC, 2- jts J-55 (1 NEW), SN, 2- Jts J-55 (NEW), TA, 10- jts J-55 (NEW), 172- jts of 2 7/8 J-55. ND BOP, Set TA w/ 16,000# of tension. NU WH. TIH w/ revised rod string. 2 1/2" X 1 1/2" X 16' RHAC "CDI", 6- 1 1/2" wt bars, 30- 3/4" guided rods (BTM 20 NEW), 105- 3/4" plain rods, 88- 3/4" guided rods, 1- 2' X 3/4" pony, 1 1/4" X 22' Polish rod. Hang head. Space out rods. Fill tbg w/ 8 bbls of wtr. Pressure test to 800 psi. Hot oiler pumped 5 bbls of wtr down flow line. RDMO POP @ 12:30 PM w/ 98" SL @ 4 SPM. Est 1142 BWTR. Hot oiler heated & transferred 50 bbls of oil to tank #1.
FINAL REPORT!!!!

Starting fluid load to be recovered: 1134 **Starting oil rec to date:** 15
Fluid lost/recovered today: 8 **Oil lost/recovered today:** 50
Ending fluid to be recovered: 1142 **Cum oil recovered:** 65
IFL: 1600' **FFL:** 2500' **FTP:** **Choke:** **Final Fluid Rate:** **Final oil cut:**

TUBING DETAIL	ROD DETAIL	COSTS	
		NC#1	$1,927
KB 10.00'	1-1/4" x 22' Polish rod	Graco BOP	$145
172 jts J-55 tbg (5334.81')	1- 2' x 3/4" pony rod	Zubiate HO trk	$900
10 jts J-55 "NEW" (325.82')	88 - 3/4" guided rods	13- jts 2 7/8 J-55 tbg	$2,102
TA 2.80' @ 5703.33'	105 - 3/4" plain rods	RNI wtr disposal	$1,600
2 jts J-55 tbg "New" (65.35')	30- 3/4" guided(BTM 20 New)	NPC swb tnks(2X7 dys)	$560
SN "NEW"1.10' @ 5771.48'	6 - 1-1/2" wt bars	NPC frc tnks(4X7 dys)	$1,120
2 jt J-55 "1 NEW" (62.23')	2-1/2"x1-1/2"x12'x16' RHAC	NPC frac valve	$170
NC 0.45'	Axelson	NPC fuel gas	$350
EOT @ 5835.26'		20- 3/4" guided rods	$1,005
		Location cleanup	$400
		NPC supervision	$150
		DAILY COST:	$10,429
		TOTAL WELL COST:	$101,448

Completion supervisor: Orson Barney

ATTACHMENT H

WORK PROCEDURE FOR PLUGGING AND ABANDONMENT

1.		Set CIBP @ 4340'
2.	Plug #1	Set 100' plug on top of CIBP using 12 sx Class "G" cement
3.	Plug #2	175' balance plug using 20 sx Class "G" cement 50' above Trona-Bird's Nest extending 50' below base of Mahogany Oil Shale
4.	Plug #3	120' balance plug using 14 sx Class "G" cement 60'above Uinta/Green River and extending 60' below
5.		Perforate 4 JSPF @ 313'
6.	Plug #4	Circulate 88 sx Class "G" cement down 5 ½" and up the 5 ½" x 8 5/8" annulus

The approximate cost to plug and abandon this well is $42,000.

Attachment H-1

Monument Federal #13-4-9-16

Spud Date: 1-6-97
Put on Production: 2-4-97
GL: 5761' KB: 5773'

Initial Production: 65 BOPD, 116 MCFD
0 BWPD

SURFACE CASING

CSG SIZE: 8-5/8"
GRADE: J-55
WEIGHT: 24#
LENGTH: 5 JTS (253')
DEPTH LANDED: 263'
HOLE SIZE: 12-1/4"
CEMENT DATA: 160 sks Class G cement

PRODUCTION CASING

CSG SIZE: 5-1/2"
GRADE: J-55
WEIGHT: 15.5#
LENGTH: 140 jts
HOLE SIZE: 7-7/8"
CEMENT DATA: 275 sks Prem Lite & 500 sks 50/50 Poz mix
CEMENT TOP AT: 785'
DEPTH LANDED: 5925'

Proposed P & A
Wellbore Diagram

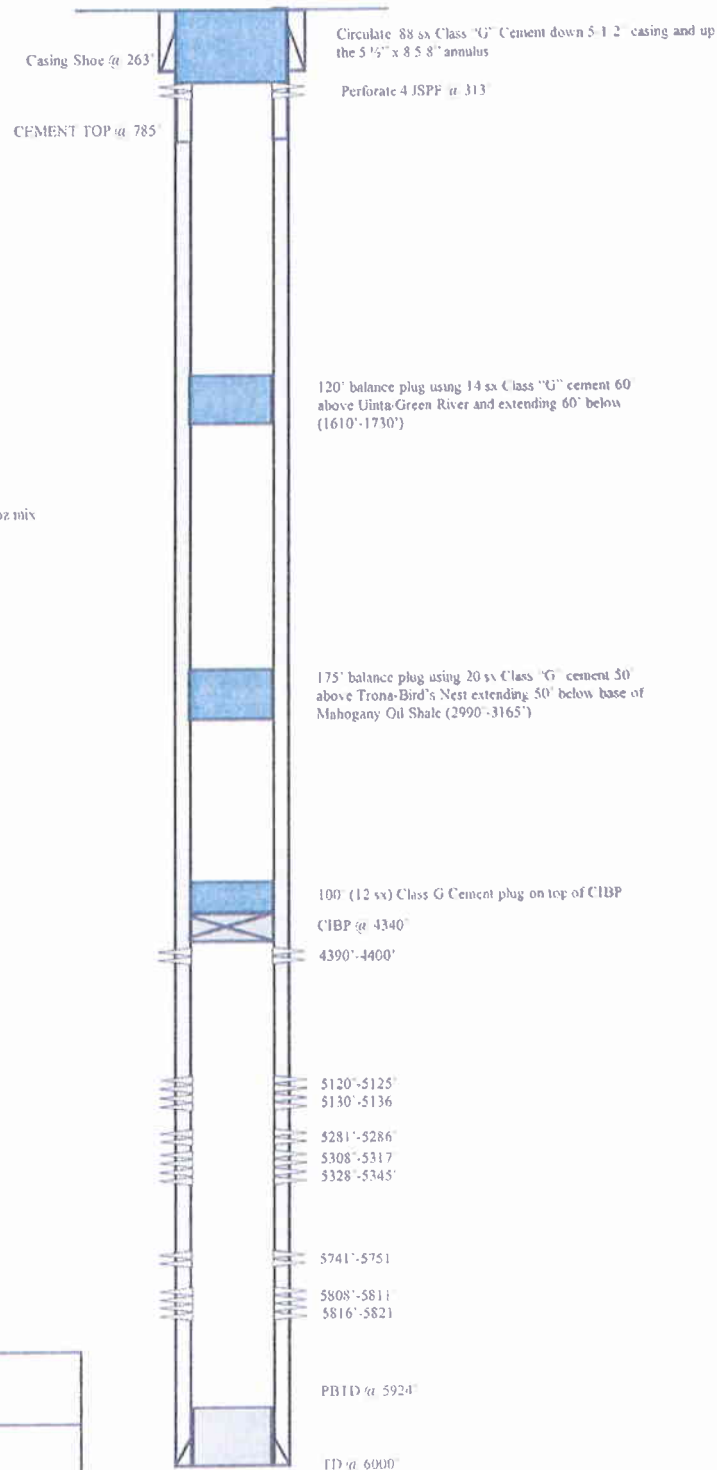

NEWFIELD

Monument Federal #13-4-9-16

2050 FSL & 660 FWL

NWSW Section 4-T9S-R16E

Duchesne Co, Utah

API #43-013-31716; Lease #UTU-73086

JL 2 16 2011

FORM 3160-5
(August 2007)

UNITED STATES
DEPARTMENT OF THE INTERIOR
BUREAU OF LAND MANAGEMENT

FORM APPROVED
OMB No. 1004-0137
Expires: July 31,2010

SUNDRY NOTICES AND REPORTS ON WELLS

Do not use this form for proposals to drill or to re-enter an abandoned well. Use Form 3160-3 (APD) for such proposals.

SUBMIT IN TRIPLICATE - Other Instructions on page 2

5. Lease Serial No.
USA UTU-73086

6. If Indian, Allottee or Tribe Name.

7. If Unit or CA/Agreement, Name and/or
GMBU

1. Type of Well
☒ Oil Well ☐ Gas Well ☐ Other

8. Well Name and No.
MONUMENT FED 13-4-9-16

2. Name of Operator
NEWFIELD PRODUCTION COMPANY

9. API Well No.
4301331716

3a. Address Route 3 Box 3630
Myton, UT 84052

3b. Phone *(include are code)*
435.646.3721

10. Field and Pool, or Exploratory Area
GREATER MB UNIT

4. Location of Well *(Footage, Sec., T., R., M., or Survey Description)*
2050 FSL 660 FWL

NWSW Section 4 T9S R16E

11. County or Parish, State
DUCHESNE, UT

12. CHECK APPROPRIATE BOX(ES) TO INIDICATE NATURE OF NOTICE, OR OTHER DATA

TYPE OF SUBMISSION	TYPE OF ACTION			
☒ Notice of Intent	☐ Acidize	☐ Deepen	☐ Production (Start/Resume)	☐ Water Shut-Off
☐ Subsequent Report	☐ Alter Casing	☐ Fracture Treat	☐ Reclamation	☐ Well Integrity
☐ Final Abandonment	☐ Casing Repair	☐ New Construction	☐ Recomplete	☐ Other _____
	☐ Change Plans	☐ Plug & Abandon	☐ Temporarily Abandon	
	☒ Convert to Injector	☐ Plug Back	☐ Water Disposal	

13. Describe Proposed or Completed Operation: (Clearly state all pertinent details, including estimated starting date of any proposed work and approximate duration thereof. If the proposal is to deepen directionally or recomplete horizontally, give subsurface locations and measured and true vertical depths of all pertinent markers and zones. Attach the Bond under which the work will be performed or provide the Bond No. on file with BLM/BIA. Required subsequent reports shall be filed within 30 days following completion of the involved operations. If the operation results in a multiple completion or recompletion in a new interval, a Form 3160-4 shall be filed once testing has been completed. Final Abandonment Notices shall be filed only after all requirements, including reclamation, have been completed, and the operator has determined that the site is ready for final inspection.)

Newfield Production proposes to convert the above mentioned well from producing oil well to an injection well.

I hereby certify that the foregoing is true and correct *(Printed/ Typed)*
Jill Loyle

Title
Regulatory Technician

Signature

Date
03/11/2011

THIS SPACE FOR FEDERAL OR STATE OFFICE USE

Approved by

Title

Date

Conditions of approval, if any, are attached. Approval of this notice does not warrant or certify that the applicant holds legal or equitable title to those rights in the subject lease which would entitle the applicant to conduct operations thereon.

Office

Title 18 U.S.C. Section 1001 and Title 43 U.S.C. Section 1212, make it a crime for any person knowingly and willfully to make to any department or agency of the United States any false, fictitious and fraudulent statements or representations as to any matter within its jurisdiction

(Instructions on page 2)

4770 S. 5600 W.
P.O. BOX 704005
WEST VALLEY CITY, UTAH 84170
FED.TAX I.D.# 87-0217663

The Salt Lake Tribune — MEDIAONE OF UTAH — Deseret News

PROOF OF PUBLICATION — CUSTOMER'S COPY

CUSTOMER NAME AND ADDRESS	ACCOUNT NUMBER	DATE
DIV OF OIL-GAS & MINING, 1594 W NORTH TEMP #1210 P.O. BOX 145801 SALT LAKE CITY, UT 84114	9001402352 APR 19 2011	4/4/2011

ACCOUNT NAME	
DIV OF OIL-GAS & MINING,	
TELEPHONE	**ADORDER# / INVOICE NUMBER**
8015385340	0000677444 /
SCHEDULE	
Start 04/01/2011	End 04/01/2011
CUST. REF. NO.	
Cause # UIC-374	
CAPTION	
BEFORE THE DIVISION OF OIL, GAS AND MINING DEPARTMENT OF NATURAL RE	
SIZE	
69 Lines	2.00 COLUMN
TIMES	**RATE**
4	
MISC. CHARGES	**AD CHARGES**
	TOTAL COST
	236.84

BEFORE THE DIVISION OF OIL, GAS AND MINING
DEPARTMENT OF NATURAL RESOURCES
STATE OF UTAH
NOTICE OF AGENCY ACTION
CAUSE NO. UIC-374

IN THE MATTER OF THE APPLICATION OF NEWFIELD PRODUCTION COMPANY FOR ADMINISTRATIVE APPROVAL OF CERTAIN WELLS LOCATED IN SECTION 32, TOWNSHIP 8 SOUTH, RANGE 16 EAST, AND SECTIONS 3, 4, 9, 10, AND 18, TOWNSHIP 9 SOUTH, RANGE 16 EAST, DUCHESNE COUNTY, UTAH, AS CLASS II INJECTION WELLS.

THE STATE OF UTAH TO ALL PERSONS INTERESTED IN THE ABOVE ENTITLED MATTER.

Notice is hereby given that the Division of Oil, Gas and Mining (the "Division") is commencing an informal adjudicative proceeding to consider the application of Newfield Production Company for administrative approval of the following wells located in Duchesne County, Utah, for conversion to Class II injection wells:

Greater Monument Butte Unit:
Wells Draw 16-32-8-16 well located in SE/4 SE/4, Section 32, Township 8 South, Range 16 East
South Wells Draw 12-3-9-16 well located in NW/4 SW/4, Section 3, Township 9 South, Range 16 East
Monument Federal 13-4-9-16 well located in NW/4 SW/4, Section 4, Township 9 South, Range 16 East
Federal 42-4 well located in SE/4 NE/4, Section 4, Township 9 South, Range 16 East
South Wells Draw Federal 8-9-9-16 well located in SE/4 NE/4, Section 9, Township 9 South, Range 16 East
South Wells Draw 2-10-9-16 well located in NW/4 NE/4, Section 10, Township 9 South, Range 16 East
West Point Federal 6-18-9-16 well located in SE/4 NW/4, Section 18, Township 9 South, Range 16 East

The proceeding will be conducted in accordance with Utah Admin. R649-10, Administrative Procedures.

Selected zones in the Green River Formation will be used for water injection. The maximum requested injection pressures and rates will be determined based on fracture gradient information submitted by Newfield Production Company.

Any person desiring to object to the application or otherwise intervene in the proceeding, must file a written protest or notice of intervention with the Division within fifteen days following publication of this notice. The Division's Presiding Officer for the proceeding is Brad Hill, Permitting Manager, at P.O. Box 145801, Salt Lake City, UT 84114-5801, phone number (801) 538-5340. If such a protest or notice of intervention is received, a hearing will be scheduled in accordance with the aforementioned administrative procedural rules. Protestants and/or intervenors should be prepared to demonstrate at the hearing how this matter affects their interests.

Dated this 28th day of March, 2011.

STATE OF UTAH
DIVISION OF OIL, GAS & MINING
/s/ Brad Hill
Brad Hill
Permitting Manager

677444 UPAXLP

AFFIDAVIT OF PUBLICATION

AS NEWSPAPER AGENCY COMPANY, LLC dba MEDIAONE OF UTAH LEGAL BOOKER, I CERTIFY THAT THE ATTACHED ADVERTISEMENT OF **BEFORE THE DIVISION OF OIL, GAS AND MINING DEPARTMENT OF NATURAL RESOURCES STATE OF UTAH NOTICE OF AGENCY ACTION CAUSE NO. UIC-374 IN THE MATTER OF THE APPLICA** FOR **DIV OF OIL-GAS & MINING,** WAS PUBLISHED BY THE NEWSPAPER AGENCY COMPANY, LLC dba MEDIAONE OF UTAH, AGENT FOR THE SALT LAKE TRIBUNE AND DESERET NEWS, DAILY NEWSPAPERS PRINTED IN THE ENGLISH LANGUAGE WITH GENERAL CIRCULATION IN UTAH, AND PUBLISHED IN SALT LAKE CITY, SALT LAKE COUNTY IN THE STATE OF UTAH. NOTICE IS ALSO POSTED ON UTAHLEGALS.COM ON THE SAME DAY AS THE FIRST NEWSPAPER PUBLICATION DATE AND REMAINS ON UTAHLEGALS.COM INDEFINATELY.

PUBLISHED ON Start 04/01/2011 End 04/01/2011

SIGNATURE Sandy Lawson

4/4/2011

VIRGINIA CRAFT
Notary Public, State of Utah
Commission # 581119
My Commission Expires
January 12, 2014

Virginia Craft

THIS IS NOT A STATEMENT BUT A "PROOF OF PUBLICATION"
PLEASE PAY FROM BILLING STATEMENT

AFFIDAVIT OF PUBLICATION

County of Duchesne,
STATE OF UTAH

I, Geoff Liesik on oath, say that I am the EDITOR of the Uintah Basin Standard, a weekly newspaper of general circulation, published at Roosevelt, State and County aforesaid, and that a certain notice, a true copy of which is hereto attached, was published in the full issue such newspaper for 1 consecutive issues, and that the first publication was on the 5 day of April, 2011, and that the last publication of such notice was in the issue of such newspaper dated the 5 day of April, 2011, and that said notice was published on Utahlegals.com on the same day as the first newspaper publication and the notice remained on Utahlegals.com until the end of the scheduled run.

G. Liesik
Editor

Subscribed and sworn to before me this
5 day of April, 2011

Bonnie Parrish
Notary Public

BONNIE PARRISH
NOTARY PUBLIC-STATE OF UTAH
471 N HILLCREST DR 415-5
ROOSEVELT, UTAH 84066
COMM. EXP. 3-31-2012

NOTICE OF AGENCY ACTION CAUSE NO. UIC-374

BEFORE THE DIVISION OF OIL, GAS AND MINING
DEPARTMENT OF NATURAL RESOURCES, STATE OF UTAH

IN THE MATTER OF THE APPLICATION OF NEWFIELD PRODUCTION COMPANY FOR ADMINISTRATIVE APPROVAL OF CERTAIN WELLS LOCATED IN SECTION 32, TOWNSHIP 8 SOUTH, RANGE 16 EAST, AND SECTIONS 3, 4, 9, 10, AND 18, TOWNSHIP 9 SOUTH, RANGE 16 EAST, DUCHESNE COUNTY, UTAH, AS CLASS II INJECTION WELLS.

THE STATE OF UTAH TO ALL PERSONS INTERESTED IN THE ABOVE ENTITLED MATTER.

Notice is hereby given that the Division of Oil, Gas and Mining (the "Division") is commencing an informal adjudicative proceeding to consider the application of Newfield Production Company for administrative approval of the following wells located in Duchesne County, Utah, for conversion to Class II injection wells:

Greater Monument Butte Unit:

Wells Draw 16-32-8-16 well located in SE/4 SE/4, Section 32, Township 8 South, Range 16 East

South Wells Draw 12-3-9-16 well located in NW/4 SW/4, Section 3, Township 9 South, Range 16 East

Monument Federal 13-4-9-16 well located in NW/4 SW/4, Section 4, Township 9 South, Range 16 East

Federal 42-4 well located in SE/4 NE/4, Section 4, Township 9 South, Range 16 East

South Wells Draw Federal 8-9-9-16 well located in SE/4 NE/4, Section 9, Township 9 South, Range 16 East,

South Wells Draw 2-10-9-16 well located in NW/4 NE/4, Section 10, Township 9 South, Range 16 East

West Point Federal 6-18-9-16 well located in SE/4 NW/4, Section 18, Township 9 South, Range 16 East

The proceeding will be conducted in accordance with Utah Admin. R649-10, Administrative Procedures.

Selected zones in the Green River Formation will be used for water injection. The maximum requested injection pressures and rates will be determined based on fracture gradient information submitted by Newfield Production Company.

Any person desiring to object to the application or otherwise intervene in the proceeding, must file a written protest or notice of

BEFORE THE DIVISION OF OIL, GAS AND MINING
DEPARTMENT OF NATURAL RESOURCES
STATE OF UTAH
NOTICE OF AGENCY ACTION
CAUSE NO. UIC-374

IN THE MATTER OF THE APPLICATION OF NEWFIELD PRODUCTION COMPANY FOR ADMINISTRATIVE APPROVAL OF CERTAIN WELLS LOCATED IN SECTION 32, TOWNSHIP 8 SOUTH, RANGE 16 EAST, AND SECTIONS 3, 4, 9, 10, AND 18, TOWNSHIP 9 SOUTH, RANGE 16 EAST, DUCHESNE COUNTY, UTAH, AS CLASS II INJECTION WELLS.

THE STATE OF UTAH TO ALL PERSONS INTERESTED IN THE ABOVE ENTITLED MATTER.

Notice is hereby given that the Division of Oil, Gas and Mining (the "Division") is commencing an informal adjudicative proceeding to consider the application of Newfield Production Company for administrative approval of the following wells located in Duchesne County, Utah, for conversion to Class II injection wells:

Greater Monument Butte Unit:
Wells Draw 16-32-8-16 well located in SE/4 SE/4, Section 32, Township 8 South, Range 16 East
South Wells Draw 12-3-9-16 well located in NW/4 SW/4, Section 3, Township 9 South, Range 16 East
Monument Federal 13-4-9-16 well located in NW/4 SW/4, Section 4, Township 9 South, Range 16 East
Federal 42-4 well located in SE/4 NE/4, Section 4, Township 9 South, Range 16 East
South Wells Draw Federal 8-9-9-16 well located in SE/4 NE/4, Section 9, Township 9 South, Range 16 East
South Wells Draw 2-10-9-16 well located in NW/4 NE/4, Section 10, Township 9 South, Range 16 East
West Point Federal 6-18-9-16 well located in SE/4 NW/4, Section 18, Township 9 South, Range 16 East

The proceeding will be conducted in accordance with Utah Admin. R649-10, Administrative Procedures.

Selected zones in the Green River Formation will be used for water injection. The maximum requested injection pressures and rates will be determined based on fracture gradient information submitted by Newfield Production Company.

Any person desiring to object to the application or otherwise intervene in the proceeding, must file a written protest or notice of intervention with the Division within fifteen days following publication of this notice. The Division's Presiding Officer for the proceeding is Brad Hill, Permitting Manager, at P.O. Box 145801, Salt Lake City, UT 84114-5801, phone number (801) 538-5340. If such a protest or notice of intervention is received, a hearing will be scheduled in accordance with the aforementioned administrative procedural rules. Protestants and/or interveners should be prepared to demonstrate at the hearing how this matter affects their interests.

Dated this 28th day of March, 2011.

STATE OF UTAH
DIVISION OF OIL, GAS & MINING

Brad Hill
Permitting Manager

Newfield Production Company

**WELLS DRAW 16-32-8-16, SOUTH WELLS DRAW 12-3-9-16,
MONUMENT FEDERAL 13-4-9-16, FEDERAL 42-4,
SOUTH WELLS DRAW FEDERAL 8-9-9-16, SOUTH WELLS DRAW 2-10-9-16,
WEST POINT FEDERAL 6-18-9-16**

Cause No. UIC-374

Publication Notices were sent to the following:

Newfield Production Company
1001 17th Street, Suite 2000
Denver, CO 80202

Uintah Basin Standard
268 South 200 East
Roosevelt, UT 84066
via e-mail legals@ubstandard.com

Salt Lake Tribune
P O Box 45838
Salt Lake City, UT 84145
via e-mail naclegal@mediaoneutah.com

Vernal Office
Bureau of Land Management
170 South 500 East
Vernal, UT 84078

Duchesne County Planning
P O Box 317
Duchesne, UT 84021-0317

Bruce Suchomel
US EPA Region 8
MS 8P-W-GW
1595 Wynkoop Street
Denver, CO 80202-1129

SITLA
675 East 500 South
Salt Lake City, UT 84102-2818

Newfield Production Company
Rt 3 Box 3630
Myton, UT 84052

Jan Sweet

GARY R. HERBERT
Governor

GREGORY S. BELL
Lieutenant Governor

State of Utah
DEPARTMENT OF NATURAL RESOURCES

MICHAEL R. STYLER
Executive Director

Division of Oil, Gas and Mining
JOHN R. BAZA
Division Director

March 29, 2011

Via e-mail: legals@ubstandard.com

Uintah Basin Standard
268 South 200 East
Roosevelt, UT 84066

Subject: Notice of Agency Action – Newfield Production Company Cause No. UIC-374

To Whom It May Concern:

Enclosed is a copy of the referenced Notice of Agency Action. Please publish the Notice, once only, as soon as possible. Please notify me via e-mail of the date it will be published. My e-mail address is: jsweet@utah.gov.

Please send proof of publication and billing to:

Division of Oil, Gas and Mining
PO Box 145801
Salt Lake City, UT 84114-5801

Sincerely,

Jean Sweet

Jean Sweet
Executive Secretary

Enclosure

1594 West North Temple, Suite 1210, PO Box 145801, Salt Lake City, UT 84114 -5801
telephone (801) 538-5340 • facsimile (801) 359-3940 • TTY (801) 538-7458 • *www.ogm.utah.gov*

UTAH DNR OIL, GAS & MINING

From: Cindy Kleinfelter <classifieds@ubstandard.com>
To: <jsweet@utah.gov>
Date: 3/30/2011 4:54 PM
Subject: Notice of Agency Action UIC-374

This will be published April 5, 2011.
Thank you
Cindy

GARY R. HERBERT
Governor

GREGORY S. BELL
Lieutenant Governor

State of Utah
DEPARTMENT OF NATURAL RESOURCES

MICHAEL R. STYLER
Executive Director

Division of Oil, Gas and Mining
JOHN R. BAZA
Division Director

March 29, 2011

VIA E-MAIL naclegal@mediaoneutah.com

Salt Lake Tribune
P. O. Box 45838
Salt Lake City, UT 84145

Subject: Notice of Agency Action – Newfield Production Company Cause No. UIC-374

To Whom It May Concern:

Enclosed is a copy of the referenced Notice of Agency Action. Please publish the Notice, once only, as soon as possible. Please notify me via e-mail of the date it will be published. My e-mail address is: jsweet@utah.gov.

Please send proof of publication and billing for **account #9001402352** to:

Division of Oil, Gas and Mining
PO Box 145801
Salt Lake City, UT 84114-5801

Sincerely,

Jean Sweet

Jean Sweet
Executive Secretary

Enclosure

Jean Sweet - RE: Notice of Agency Action - Newfield Production Company Cause No. UIC-374

From: "NAC Legal" <naclegal@mediaoneutah.com>
To: "'Jean Sweet'" <jsweet@utah.gov>
Date: 3/29/2011 12:10 PM
Subject: RE: Notice of Agency Action - Newfield Production Company Cause No. UIC-374

Ad #677444 is scheduled to run April 1st in Deseret News, Salt Lake Tribune and Online. The total cost is $236.84.

The combined readership of our papers for print and online is 700,437 on weekdays, and 852,670 on Sunday, giving you the most views possible for your notice.

Please check the ad in the papers.

Thank you,

Lynn Valdez

MediaOne of Utah,

a Newspaper Agency Company

4770 South 5600 West

West Valley City, Utah 84118

Ph.: 801-204-6245

Email: naclegal@mediaoneutah.com

From: Jean Sweet [mailto:jsweet@utah.gov]

GARY R. HERBERT
Governor

GREGORY S. BELL
Lieutenant Governor

State of Utah

DEPARTMENT OF NATURAL RESOURCES

MICHAEL R. STYLER
Executive Director

Division of Oil, Gas and Mining

JOHN R. BAZA
Division Director

May 26, 2011

Newfield Production Company
1001 Seventeenth Street, Suite 2000
Denver, CO 80202

Subject: Greater Monument Butte Unit Well: Monument Federal 13-4-9-16, Section 4, Township 9 South, Range 16 East, SLBM, Duchesne County, Utah, API Well # 43-013-31716

Gentlemen:

Pursuant to Utah Admin. Code R649-5-3-3, the Division of Oil, Gas and Mining (the "Division") issues its administrative approval for conversion of the referenced well to a Class II injection well. Accordingly, the following stipulations shall apply for full compliance with this approval:

1. Compliance with all applicable requirements for the operation, maintenance and reporting for Underground Injection Control ("UIC") Class II injection wells pursuant to Utah Admin. Code R649-1 et seq.

2. Conformance with all conditions and requirements of the complete application submitted by Newfield Production Company.

3. A casing\tubing pressure test shall be conducted prior to commencing injection.

4. Pressure shall be monitored between the surface casing and the production casing on a regular basis. Any pressure changes observed shall be reported to the Division immediately.

A final approval to commence injection will be issued upon satisfactory completion of the listed stipulations. If you have any questions regarding this approval or the necessary requirements, please contact Mark Reinbold at 801-538-5333 or Brad Hill at 801-538-5315.

Sincerely,

John Rogers
Associate Director

JR/MLR/js
cc: Bruce Suchomel, Environmental Protection Agency
Bureau of Land Management, Vernal
Duchesne County
Newfield Production Company, Myton
Well File
N:\O&G Reviewed Docs\ChronFile\UIC

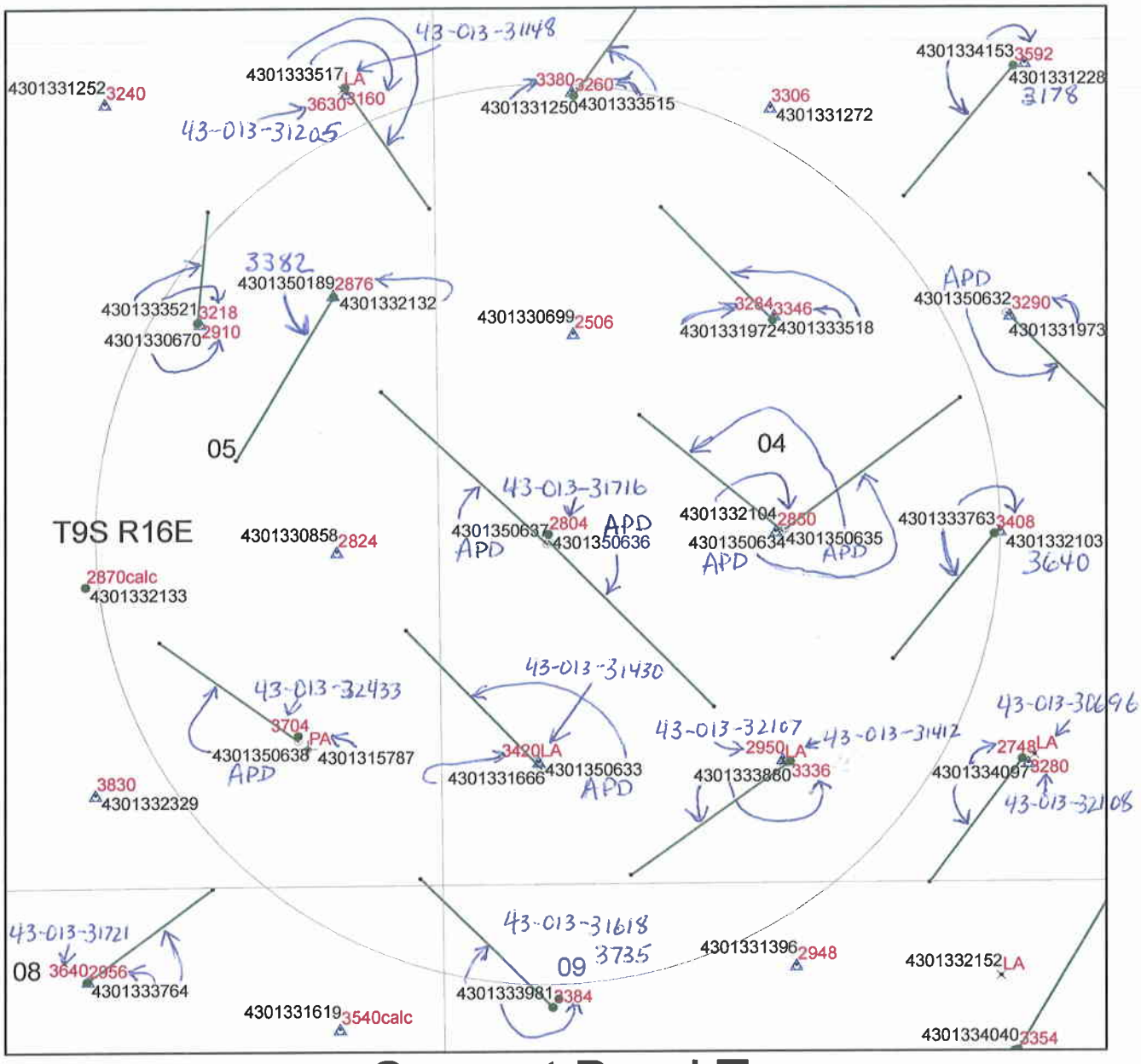

Cement Bond Tops
MONUMENT FEDERAL 13-4-9-16
API #43-013-31716
UIC-374.6

Legend

- Buffer_of_SGID93_ENERGY_DNROilGasWells_35
- SGID93.BOUNDARIES.Counties
- SGID93.CADASTRE.PLSSTownships_GCDB
- SGID93.CADASTRE.PLSSSections_GCDB
- GAS INJECTION
- TW
- TA
- OPS
- GS
- APD
- PA
- LA
- GAS STORAGE
- LOCATION ABANDONED
- NEW LOCATION
- PLUGGED & ABANDONED
- PRODUCING GAS
- PRODUCING OIL
- SHUT-IN GAS
- SHUT-IN OIL
- TEMP. ABANDONED
- TEST WELL
- WATER INJECTION
- WATER SUPPLY
- WATER DISPOSAL
- DRILLING
- RETURNED GAS
- RETURNED OIL
- GAS INJECTION SI
- WATER DISP. SUSP.
- WATER INJ. SUSP.
- Wells-CbltopsMaster4_4_11
- SGID93.ENERGY.DNROilGasWells_HDPath

0 — 0.32 Miles

1870calc = approx cement top calculated from well completion report

N

DIVISION OF OIL, GAS AND MINING
UNDERGROUND INJECTION CONTROL PROGRAM
PERMIT
STATEMENT OF BASIS

Applicant: Newfield Production Company **Well:** Monument Federal 13-4-9-16

Location: 4/9S/16E **API:** 43-013-31716

Ownership Issues: The proposed well is located on BLM land. The well is located in the Greater Monument Butte Unit. Lands in the one-half mile radius of the well are administered by the BLM. The Federal Government is the mineral owner within the area of review (AOR). Newfield and other various individuals hold the leases in the unit. Newfield has provided a list of all surface, mineral and lease holders in the half-mile radius. Newfield is the operator of the Greater Monument Butte Unit. Newfield has submitted an affidavit stating that all owners and interest owners have been notified of their intent.

Well Integrity: The proposed well has surface casing set at 263 feet and has a cement top at the surface. A 5½ inch production casing is set at 5,925 feet. A cement bond log demonstrates adequate bond in this well up to about 2,804 feet. A 2 7/8 inch tubing with a packer will be set at 4,340 feet. Higher perforations will be opened at a later date. A mechanical integrity test will be run on the well prior to injection. Based on surface locations, there are 8 producing wells, 10 injection wells, and 1 P/A well in the AOR. Two of the producing wells are directionally drilled, with surface locations inside the AOR and bottom hole locations outside the AOR. In addition, there are 2 producing wells with surface locations outside the AOR and bottom hole locations inside the AOR. All of the wells have evidence of adequate casing and cement for the proposed injection interval. Inasmuch as some logs are of dubious quality or do not exhibit conclusive cement tops, it has been necessary to calculate approximate tops for "lite" cement, based on the cement indicated in the well completion report.

Ground Water Protection: As interpreted from Technical Publication No. 92, the base of moderately saline water is at a depth of approximately 1300 feet. Injection shall be limited to the interval between 4,163 feet and 5,924 feet in the Green River Formation. The plugged and abandoned Castle Peak 9R well is located about 1/3 mile southeast of the Monument Federal 13-4-9-16 well. The cement bond log for Castle Peak 9R indicates a cement top at about 4,540 feet. However, inasmuch as the Castle Peak 9R well has been properly plugged, it should pose no problem for the permitting the 13-4-9-16 well for injection at the requested interval. Information submitted by Newfield indicates that the fracture gradient for the 13-4-9-16 well is 0.80 psi/ft., which was the lowest reported fracture gradient for the injection zone. The resulting minimum fracture pressure for the proposed injection interval is 1,886 psig. The requested maximum pressure is 1,886 psig. The anticipated average injection pressure is 1100 psig. Injection at this pressure should not initiate any new fractures or propagate existing fractures in the adjacent confining intervals. Any ground water present should be adequately protected.

Oil/Gas& Other Mineral Resources Protection: The Board of Oil, Gas & Mining approved the Greater Monument Butte Unit on December 1, 2009. Correlative rights issues were addressed at this time. Previous reviews in this area indicate that other mineral resources in the area have been protected or are not at issue.

Bonding: Bonded with the BLM

Actions Taken and Further Approvals Needed: A notice of agency action has been sent to the Salt Lake Tribune and the Uinta Basin Standard. A casing/tubing pressure test will be required prior to injection. It is recommended that approval of this application be granted.

Note: Applicable technical publications concerning water resources in the general vicinity of this project have been reviewed and taken into consideration during the permit review process.

Reviewer(s): Mark Reinbold Date 3/31/2011

STATE OF UTAH
DEPARTMENT OF NATURAL RESOURCES
DIVISION OF OIL, GAS, AND MINING

FORM 9

5.LEASE DESIGNATION AND SERIAL NUMBER: UTU-73086

SUNDRY NOTICES AND REPORTS ON WELLS

Do not use this form for proposals to drill new wells, significantly deepen existing wells below current bottom-hole depth, reenter plugged wells, or to drill horizontal laterals. Use APPLICATION FOR PERMIT TO DRILL form for such proposals.

6. IF INDIAN, ALLOTTEE OR TRIBE NAME:

7.UNIT or CA AGREEMENT NAME: GMBU (GRRV)

1. TYPE OF WELL Oil Well

8. WELL NAME and NUMBER: MON FED 13-4-9-16

2. NAME OF OPERATOR: NEWFIELD PRODUCTION COMPANY

9. API NUMBER: 43013317160000

3. ADDRESS OF OPERATOR: Rt 3 Box 3630 , Myton, UT, 84052

PHONE NUMBER: 435 646-4825 Ext

9. FIELD and POOL or WILDCAT: MONUMENT BUTTE

4. LOCATION OF WELL
FOOTAGES AT SURFACE: 2050 FSL 0660 FWL
QTR/QTR, SECTION, TOWNSHIP, RANGE, MERIDIAN: Qtr/Qtr: NWSW Section: 04 Township: 09.0S Range: 16.0E Meridian: S

COUNTY: DUCHESNE

STATE: UTAH

11. CHECK APPROPRIATE BOXES TO INDICATE NATURE OF NOTICE, REPORT, OR OTHER DATA

TYPE OF SUBMISSION

- ☐ NOTICE OF INTENT — Approximate date work will start:
- ✓ SUBSEQUENT REPORT — Date of Work Completion: 1/6/2012
- ☐ SPUD REPORT — Date of Spud:
- ☐ DRILLING REPORT — Report Date:

TYPE OF ACTION

☐ ACIDIZE	☐ ALTER CASING	☐ CASING REPAIR
☐ CHANGE TO PREVIOUS PLANS	☐ CHANGE TUBING	☐ CHANGE WELL NAME
✓ CHANGE WELL STATUS	☐ COMMINGLE PRODUCING FORMATIONS	✓ CONVERT WELL TYPE
☐ DEEPEN	☐ FRACTURE TREAT	☐ NEW CONSTRUCTION
☐ OPERATOR CHANGE	☐ PLUG AND ABANDON	☐ PLUG BACK
☐ PRODUCTION START OR RESUME	☐ RECLAMATION OF WELL SITE	☐ RECOMPLETE DIFFERENT FORMATION
☐ REPERFORATE CURRENT FORMATION	☐ SIDETRACK TO REPAIR WELL	☐ TEMPORARY ABANDON
☐ TUBING REPAIR	☐ VENT OR FLARE	☐ WATER DISPOSAL
☐ WATER SHUTOFF	☐ SI TA STATUS EXTENSION	☐ APD EXTENSION
☐ WILDCAT WELL DETERMINATION	☐ OTHER	OTHER:

12. DESCRIBE PROPOSED OR COMPLETED OPERATIONS. Clearly show all pertinent details including dates, depths, volumes, etc.

The subject well has been converted from a producing oil well to an injection well on 01/04/2012. On 01/06/2012 Dennis Ingram with the State of Utah DOGM was contacted concerning the initial MIT on the above listed well. On 01/06/2012 the casing was pressured up to 1350 psig and charted for 30 minutes with no pressure loss. The well was not injecting during the test. The tubing pressure was 0 psig during the test. There was not a State representative available to witness the test.

Accepted by the Utah Division of Oil, Gas and Mining

Date: January 12, 2012

By:

NAME (PLEASE PRINT)	PHONE NUMBER	TITLE
Lucy Chavez-Naupoto	435 646-4874	Water Services Technician

SIGNATURE	DATE
N/A	1/10/2012

RECEIVED: Jan. 10, 2012

Mechanical Integrity Test
Casing or Annulus Pressure Test

Newfield Production Company
Rt. 3 Box 3630
Myton, UT 84052
435-646-3721

Witness: _____ **Date** 1/6/12 **Time** 11:00 am pm

Test Conducted by: Dave Chouard

Others Present: _____

Well: Monument Federal 13-4-9-16 **Field:** Monument Federal Duchesne, County, Utah UTU 87538X

Well Location: Monument Federal 13-4-9-16 NW/SW Sec. 4, T9S, R16E **API No:** 43-013-31716

Time	Casing Pressure	
0 min	1350	psig
5	1350	psig
10	1350	psig
15	1350	psig
20	1350	psig
25	1350	psig
30 min	1350	psig
35		psig
40		psig
45		psig
50		psig
55		psig
60 min		psig

Tubing pressure: 0 psig

Result: Pass Fail

Signature of Witness: _____

Signature of Person Conducting Test: David Chouard

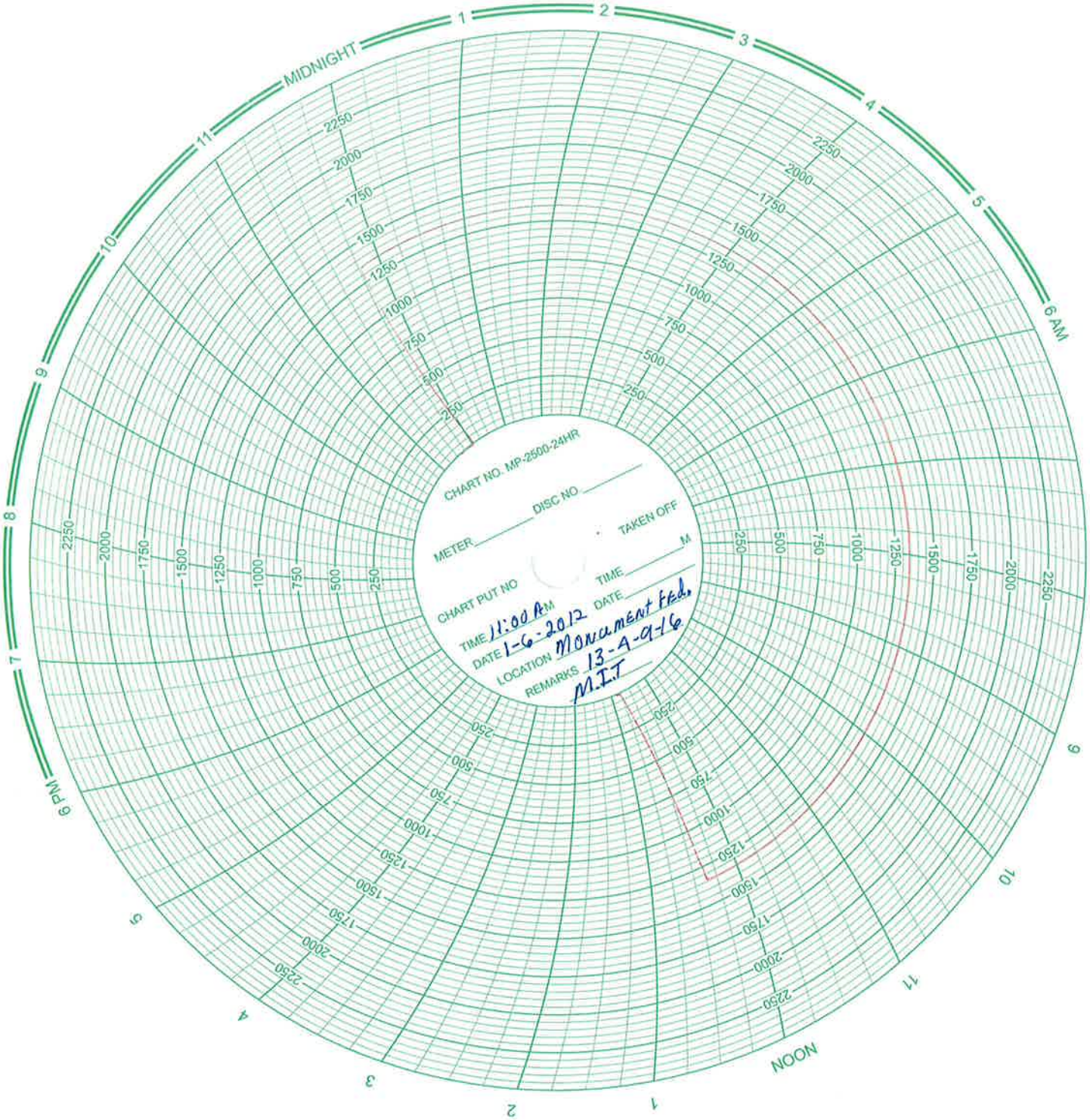
MIDNIGHT
6 AM
NOON
6 PM
CHART NO. MP-2500-24HR
METER
DISC NO
TAKEN OFF
M
TIME
DATE
CHART PUT ON
TIME
DATE
LOCATION
REMARKS
11:00 AM
1-6-2012
Monument Fed.
13-4-9-16
M.I.T

Daily Activity Report

Format For Sundry

MON 13-4-9-16

10/1/2011 To 2/29/2012

10/17/2011 Day: 1 **Host Well Gyro**

NC #3 on 10/17/2011 - MIRUSU, TOH w/ rods, run gyro. - Road rig to location. MIRUSU. Pump 60 bbls water down csg @ 250. RD pumping unit. Unseat rod pump. Flush tbg & rods w/ 40 bbls water @ 250. Softseat rod pump. Fill tbg w/ 10 bbls water. Attempt to pressure test tbg. Tbg blew @ 2800 psi. Unseat rod pump. TOH w/ 88- 3/4 guided rods, 55- 3/4 plain rods, 80- 3/4 guided rods, 6- 1 1/2 wt bars, rod pump. Used 40 bbls water to keep rod clean. Pump looked good. X- over to tbg eq. Flush tbg w/ 30 bbls water @ 250. RU VES to run gyro survey. RD VES. SDFD. - ND wellhead. Release TA. NU BOP. RU rig floor. PU TIH w/ 3- jts 2 7/8. Tag PBTD @ 5924'. No new fill. LD 3- jts 2 7/8. TOH w/ 182- jts 2 7/8, TA, 2- jts 2 7/8, SN, 2- jts 2 7/8, NC. Found hole in jt # 138. LD & replace jts 134-143. PU TIH w/ NC, 2- jts 2 7/8, bleed nipple, SN, 2- jts 2 7/8, TA, 182- jts 2 7/8. Pump 10 bbls water down tbg & drop std valve. Pressure test tbg to 3000 psi w/ 30 bbls water. Good test. RU sandline to retrieve std valve. RD sandline. RD rig floor. ND BOP. Set TA w/ 18000 tension. NU wellhead. X- over to rod eq. PU TIH w/ 2 1/2 x 1 1/4 x 12 x 16 RHAC, stabilizer (new), 6- 1 1/2 wt bars, 80- 3/4 guided rods, 55- 3/4 plain rods, 88- 3/4 guided rods, 2' x 3/4 pony rod, 1 1/2 x 22' polish rod. RU pumping unit. Fill tbg w/ 10 bbls water. Stroke test rod pump to 800 psi. Good test. RDMOSU. POP @ 6:00 W/ 86" SL @ 5 SPM FINAL REPORT!! - ND wellhead. Release TA. NU BOP. RU rig floor. PU TIH w/ 3- jts 2 7/8. Tag PBTD @ 5924'. No new fill. LD 3- jts 2 7/8. TOH w/ 182- jts 2 7/8, TA, 2- jts 2 7/8, SN, 2- jts 2 7/8, NC. Found hole in jt # 138. LD & replace jts 134-143. PU TIH w/ NC, 2- jts 2 7/8, bleed nipple, SN, 2- jts 2 7/8, TA, 182- jts 2 7/8. Pump 10 bbls water down tbg & drop std valve. Pressure test tbg to 3000 psi w/ 30 bbls water. Good test. RU sandline to retrieve std valve. RD sandline. RD rig floor. ND BOP. Set TA w/ 18000 tension. NU wellhead. X- over to rod eq. PU TIH w/ 2 1/2 x 1 1/4 x 12 x 16 RHAC, stabilizer (new), 6- 1 1/2 wt bars, 80- 3/4 guided rods, 55- 3/4 plain rods, 88- 3/4 guided rods, 2' x 3/4 pony rod, 1 1/2 x 22' polish rod. RU pumping unit. Fill tbg w/ 10 bbls water. Stroke test rod pump to 800 psi. Good test. RDMOSU. POP @ 6:00 W/ 86" SL @ 5 SPM FINAL REPORT!! - Road rig to location. MIRUSU. Pump 60 bbls water down csg @ 250. RD pumping unit. Unseat rod pump. Flush tbg & rods w/ 40 bbls water @ 250. Softseat rod pump. Fill tbg w/ 10 bbls water. Attempt to pressure test tbg. Tbg blew @ 2800 psi. Unseat rod pump. TOH w/ 88- 3/4 guided rods, 55- 3/4 plain rods, 80- 3/4 guided rods, 6- 1 1/2 wt bars, rod pump. Used 40 bbls water to keep rod clean. Pump looked good. X- over to tbg eq. Flush tbg w/ 30 bbls water @ 250. RU VES to run gyro survey. RD VES. SDFD. - Road rig to location. MIRUSU. Pump 60 bbls water down csg @ 250. RD pumping unit. Unseat rod pump. Flush tbg & rods w/ 40 bbls water @ 250. Softseat rod pump. Fill tbg w/ 10 bbls water. Attempt to pressure test tbg. Tbg blew @ 2800 psi. Unseat rod pump. TOH w/ 88- 3/4 guided rods, 55- 3/4 plain rods, 80- 3/4 guided rods, 6- 1 1/2 wt bars, rod pump. Used 40 bbls water to keep rod clean. Pump looked good. X- over to tbg eq. Flush tbg w/ 30 bbls water @ 250. RU VES to run gyro survey. RD VES. SDFD. - ND wellhead. Release TA. NU BOP. RU rig floor. PU TIH w/ 3- jts 2 7/8. Tag PBTD @ 5924'. No new fill. LD 3- jts 2 7/8. TOH w/ 182- jts 2 7/8, TA, 2- jts 2 7/8, SN, 2- jts 2 7/8, NC. Found hole in jt # 138. LD & replace jts 134-143. PU TIH w/ NC, 2- jts 2 7/8, bleed nipple, SN, 2- jts 2 7/8, TA, 182- jts 2 7/8. Pump 10 bbls water down tbg & drop std valve. Pressure test tbg to 3000 psi w/ 30 bbls water. Good test. RU sandline to retrieve std valve. RD sandline. RD rig floor. ND BOP. Set TA w/ 18000 tension. NU wellhead. X- over to rod eq. PU TIH w/ 2 1/2 x 1 1/4 x 12 x 16 RHAC, stabilizer (new), 6- 1 1/2 wt bars, 80- 3/4 guided rods, 55- 3/4 plain rods, 88- 3/4 guided rods, 2' x 3/4 pony rod, 1 1/2 x 22' polish rod. RU pumping unit. Fill tbg w/ 10 bbls water. Stroke test rod pump to 800 psi. Good test. RDMOSU. POP @ 6:00 W/ 86" SL @ 5 SPM FINAL REPORT!! - ND wellhead. Release TA. NU BOP. RU rig floor. PU TIH w/ 3- jts 2 7/8. Tag PBTD @ 5924'. No new fill. LD 3- jts 2 7/8. TOH w/ 182- jts 2 7/8, TA, 2- jts 2 7/8, SN, 2- jts 2 7/8, NC. Found hole in jt # 138. LD & replace jts 134-143.

PU TIH w/ NC, 2- jts 2 7/8, bleed nipple, SN, 2- jts 2 7/8, TA, 182- jts 2 7/8. Pump 10 bbls water down tbg & drop std valve. Pressure test tbg to 3000 psi w/ 30 bbls water. Good test. RU sandline to retrieve std valve. RD sandline. RD rig floor. ND BOP. Set TA w/ 18000 tension. NU wellhead. X- over to rod eq. PU TIH w/ 2 1/2 x 1 1/4 x 12 x 16 RHAC, stabilizer (new), 6- 1 1/2 wt bars, 80- 3/4 guided rods, 55- 3/4 plain rods, 88- 3/4 guided rods, 2' x 3/4 pony rod, 1 1/2 x 22' polish rod. RU pumping unit. Fill tbg w/ 10 bbls water. Stroke test rod pump to 800 psi. Good test. RDMOSU. POP @ 6:00 W/ 86" SL @ 5 SPM FINAL REPORT!! - Road rig to location. MIRUSU. Pump 60 bbls water down csg @ 250. RD pumping unit. Unseat rod pump. Flush tbg & rods w/ 40 bbls water @ 250. Softseat rod pump. Fill tbg w/ 10 bbls water. Attempt to pressure test tbg. Tbg blew @ 2800 psi. Unseat rod pump. TOH w/ 88- 3/4 guided rods, 55- 3/4 plain rods, 80- 3/4 guided rods, 6- 1 1/2 wt bars, rod pump. Used 40 bbls water to keep rod clean. Pump looked good. X- over to tbg eq. Flush tbg w/ 30 bbls water @ 250. RU VES to run gyro survey. RD VES. SDFD. - Road rig to location. MIRUSU. Pump 60 bbls water down csg @ 250. RD pumping unit. Unseat rod pump. Flush tbg & rods w/ 40 bbls water @ 250. Softseat rod pump. Fill tbg w/ 10 bbls water. Attempt to pressure test tbg. Tbg blew @ 2800 psi. Unseat rod pump. TOH w/ 88- 3/4 guided rods, 55- 3/4 plain rods, 80- 3/4 guided rods, 6- 1 1/2 wt bars, rod pump. Used 40 bbls water to keep rod clean. Pump looked good. X- over to tbg eq. Flush tbg w/ 30 bbls water @ 250. RU VES to run gyro survey. RD VES. SDFD. - Road rig to location. MIRUSU. Pump 60 bbls water down csg @ 250. RD pumping unit. Unseat rod pump. Flush tbg & rods w/ 40 bbls water @ 250. Softseat rod pump. Fill tbg w/ 10 bbls water. Attempt to pressure test tbg. Tbg blew @ 2800 psi. Unseat rod pump. TOH w/ 88- 3/4 guided rods, 55- 3/4 plain rods, 80- 3/4 guided rods, 6- 1 1/2 wt bars, rod pump. Used 40 bbls water to keep rod clean. Pump looked good. X- over to tbg eq. Flush tbg w/ 30 bbls water @ 250. RU VES to run gyro survey. RD VES. SDFD. - ND wellhead. Release TA. NU BOP. RU rig floor. PU TIH w/ 3- jts 2 7/8. Tag PBTD @ 5924'. No new fill. LD 3- jts 2 7/8. TOH w/ 182- jts 2 7/8, TA, 2- jts 2 7/8, SN, 2- jts 2 7/8, NC. Found hole in jt # 138. LD & replace jts 134-143. PU TIH w/ NC, 2- jts 2 7/8, bleed nipple, SN, 2- jts 2 7/8, TA, 182- jts 2 7/8. Pump 10 bbls water down tbg & drop std valve. Pressure test tbg to 3000 psi w/ 30 bbls water. Good test. RU sandline to retrieve std valve. RD sandline. RD rig floor. ND BOP. Set TA w/ 18000 tension. NU wellhead. X- over to rod eq. PU TIH w/ 2 1/2 x 1 1/4 x 12 x 16 RHAC, stabilizer (new), 6- 1 1/2 wt bars, 80- 3/4 guided rods, 55- 3/4 plain rods, 88- 3/4 guided rods, 2' x 3/4 pony rod, 1 1/2 x 22' polish rod. RU pumping unit. Fill tbg w/ 10 bbls water. Stroke test rod pump to 800 psi. Good test. RDMOSU. POP @ 6:00 W/ 86" SL @ 5 SPM FINAL REPORT!! - ND wellhead. Release TA. NU BOP. RU rig floor. PU TIH w/ 3- jts 2 7/8. Tag PBTD @ 5924'. No new fill. LD 3- jts 2 7/8. TOH w/ 182- jts 2 7/8, TA, 2- jts 2 7/8, SN, 2- jts 2 7/8, NC. Found hole in jt # 138. LD & replace jts 134-143. PU TIH w/ NC, 2- jts 2 7/8, bleed nipple, SN, 2- jts 2 7/8, TA, 182- jts 2 7/8. Pump 10 bbls water down tbg & drop std valve. Pressure test tbg to 3000 psi w/ 30 bbls water. Good test. RU sandline to retrieve std valve. RD sandline. RD rig floor. ND BOP. Set TA w/ 18000 tension. NU wellhead. X- over to rod eq. PU TIH w/ 2 1/2 x 1 1/4 x 12 x 16 RHAC, stabilizer (new), 6- 1 1/2 wt bars, 80- 3/4 guided rods, 55- 3/4 plain rods, 88- 3/4 guided rods, 2' x 3/4 pony rod, 1 1/2 x 22' polish rod. RU pumping unit. Fill tbg w/ 10 bbls water. Stroke test rod pump to 800 psi. Good test. RDMOSU. POP @ 6:00 W/ 86" SL @ 5 SPM FINAL REPORT!!

Daily Cost: $0
Cumulative Cost: $13,674

12/29/2011 Day: 1 **Conversion**

Nabors #147 on 12/29/2011 - MIRU Nabors 1423. Flush and pressure test. LD rod string. - MIRU Nabors 1423. Unhang head. Unseat rod pump. Hot oiler flushed tbg w/ 50 BW. Soft seat rod pump. Fill tbg w/ 4 BW. Pressure test to 3000 psi. Unseat rod pump. LD rod string. Flushed rods 3 time on TOH. SIWFN - MIRU Nabors 1423. Unhang head. Unseat rod pump. Hot oiler flushed tbg w/ 50 BW. Soft seat rod pump. Fill tbg w/ 4 BW. Pressure test to 3000 psi. Unseat rod pump. LD rod string. Flushed rods 3 time on TOH. SIWFN - MIRU Nabors 1423. Unhang head. Unseat rod pump. Hot oiler flushed tbg w/ 50 BW. Soft seat rod pump.

Fill tbg w/ 4 BW. Pressure test to 3000 psi. Unseat rod pump. LD rod string. Flushed rods 3 time on TOH. SIWFN **Finalized**
Daily Cost: $0
Cumulative Cost: ($20,627)

1/3/2012 Day: 2 **Conversion**

Nabors #147 on 1/3/2012 - ND WH. NU BOP. TOH w/ tbg breaking and redoping. LD extra tbg and BHA. PU & RIH w/ pkr and 70 jts of tbg. SIWFN - ND wellhead & release TA. NU BOP. TOH & talley production tbg. Break each connection, clean & inspect pins and apply Liquid O-ring to pins. Out W/ 140 jts. LD btm 40 jts & BHA. MU & TIH W/ new Weatherford 5 1/2" Arrowset 1-X packer (W/ W.L. re-entry guide), new 2 7/8 SN and 70 jts 2 7/8 8rd 6.5# J-55 tbg. Re-torque each connection on TIH. SIWFN. - ND wellhead & release TA. NU BOP. TOH & talley production tbg. Break each connection, clean & inspect pins and apply Liquid O-ring to pins. Out W/ 140 jts. LD btm 40 jts & BHA. MU & TIH W/ new Weatherford 5 1/2" Arrowset 1-X packer (W/ W.L. re-entry guide), new 2 7/8 SN and 70 jts 2 7/8 8rd 6.5# J-55 tbg. Re-torque each connection on TIH. SIWFN. - ND wellhead & release TA. NU BOP. TOH & talley production tbg. Break each connection, clean & inspect pins and apply Liquid O-ring to pins. Out W/ 140 jts. LD btm 40 jts & BHA. MU & TIH W/ new Weatherford 5 1/2" Arrowset 1-X packer (W/ W.L. re-entry guide), new 2 7/8 SN and 70 jts 2 7/8 8rd 6.5# J-55 tbg. Re-torque each connection on TIH. SIWFN.
Daily Cost: $0
Cumulative Cost: ($13,117)

1/4/2012 Day: 3 **Conversion**

Nabors #147 on 1/4/2012 - 50 psi on well. Bleed off pressure. Continue to RIH w/ tbg. Hot oiler flushed tbg w/ 30 bbls of wtr. Drop SV. Fill tbg w/ 18 BW. Pressure test to 3000 psi. Fish SV. SIWFN - 50 psi on well. Bleed off pressure. Continue to RIH w/ tbg. Hot oiler flushed tbg w/ 30 bbls of wtr. Drop SV. Fill tbg w/ 18 BW. Pressure test to 3000 psi. Fish SV. SIWFN - 50 psi on well. Bleed off pressure. Continue to RIH w/ tbg. Hot oiler flushed tbg w/ 30 bbls of wtr. Drop SV. Fill tbg w/ 18 BW. Pressure test to 3000 psi. Fish SV. SIWFN - 50 psi on well. Bleed off pressure. Continue to RIH w/ tbg. Hot oiler flushed tbg w/ 30 bbls of wtr. Drop SV. Fill tbg w/ 18 BW. Pressure test to 3000 psi. Fish SV. SIWFN
Daily Cost: $0
Cumulative Cost: ($7,296)

1/5/2012 Day: 4 **Conversion**

Nabors #147 on 1/5/2012 - ND BOP. Pump pkr fluid. Set pkr. NU WH. Pressure test annulus and pkr. RDMOSU. - ND BOP & land tbg on flange. Mix 15 gals Multi-Chem C-6031 & 5 gals B-8850 in 70 bbls fresh water. Pump dn annulus @ 90°F. PU on tbg & set pkr W/ SN @ 4348', CE @ 4352' & EOT @ 4357'. Land tbg W/ 15,000# tension. NU wellhead. Pressure test annulus & pkr to 1350 psi. RDMOSU. Ready for MIT - ND BOP & land tbg on flange. Mix 15 gals Multi-Chem C-6031 & 5 gals B-8850 in 70 bbls fresh water. Pump dn annulus @ 90°F. PU on tbg & set pkr W/ SN @ 4348', CE @ 4352' & EOT @ 4357'. Land tbg W/ 15,000# tension. NU wellhead. Pressure test annulus & pkr to 1350 psi. RDMOSU. Ready for MIT - ND BOP & land tbg on flange. Mix 15 gals Multi-Chem C-6031 & 5 gals B-8850 in 70 bbls fresh water. Pump dn annulus @ 90°F. PU on tbg & set pkr W/ SN @ 4348', CE @ 4352' & EOT @ 4357'. Land tbg W/ 15,000# tension. NU wellhead. Pressure test annulus & pkr to 1350 psi. RDMOSU. Ready for MIT **Finalized**
Daily Cost: $0
Cumulative Cost: $7,098

1/9/2012 Day: 5 **Conversion**

Rigless on 1/9/2012 - Conduct MIT - On 01/06/2012 Dennis Ingram with the State of Utah (DOGM) was contacted concerning the initial MIT on the above listed well. On 01/06/2012 the csg was pressured up to 1350 psig and charted for 30 minutes with no pressure loss. The well was not injecting during the test. The tbg pressure was 0 psig during the test. There was not a State representative available to witness the test. - On 01/06/2012 Dennis Ingram with the State of Utah (DOGM) was contacted concerning the initial MIT on the above listed well. On 01/06/2012 the csg was pressured up to 1350 psig and charted for 30 minutes with no pressure loss. The well was not injecting during the test. The tbg pressure was 0 psig during the test. There was not a State representative available to witness the test. - On 01/06/2012 Dennis Ingram with the State of Utah (DOGM) was contacted concerning the initial MIT on the above listed well. On 01/06/2012 the csg was pressured up to 1350 psig and charted for 30 minutes with no pressure loss. The well was not injecting during the test. The tbg pressure was 0 psig during the test. There was not a State representative available to witness the test.
Finalized
Daily Cost: $0
Cumulative Cost: $32,858

Pertinent Files: Go to File List

STATE OF UTAH
DEPARTMENT OF NATURAL RESOURCES
DIVISION OF OIL, GAS, AND MINING

FORM 9

5.LEASE DESIGNATION AND SERIAL NUMBER: UTU-73086

SUNDRY NOTICES AND REPORTS ON WELLS

Do not use this form for proposals to drill new wells, significantly deepen existing wells below current bottom-hole depth, reenter plugged wells, or to drill horizontal laterals. Use APPLICATION FOR PERMIT TO DRILL form for such proposals.

6. IF INDIAN, ALLOTTEE OR TRIBE NAME:

7.UNIT or CA AGREEMENT NAME: GMBU (GRRV)

1. TYPE OF WELL Water Injection Well

8. WELL NAME and NUMBER: MON FED 13-4-9-16

2. NAME OF OPERATOR: NEWFIELD PRODUCTION COMPANY

9. API NUMBER: 43013317160000

3. ADDRESS OF OPERATOR: Rt 3 Box 3630 , Myton, UT, 84052

PHONE NUMBER: 435 646-4825 Ext

9. FIELD and POOL or WILDCAT: MONUMENT BUTTE

4. LOCATION OF WELL
FOOTAGES AT SURFACE: 2050 FSL 0660 FWL
QTR/QTR, SECTION, TOWNSHIP, RANGE, MERIDIAN: Qtr/Qtr: NWSW Section: 04 Township: 09.0S Range: 16.0E Meridian: S

COUNTY: DUCHESNE

STATE: UTAH

11. CHECK APPROPRIATE BOXES TO INDICATE NATURE OF NOTICE, REPORT, OR OTHER DATA

TYPE OF SUBMISSION

- ☐ NOTICE OF INTENT — Approximate date work will start:
- ✓ SUBSEQUENT REPORT — Date of Work Completion: 2/10/2012
- ☐ SPUD REPORT — Date of Spud:
- ☐ DRILLING REPORT — Report Date:

TYPE OF ACTION

☐ ACIDIZE	☐ ALTER CASING	☐ CASING REPAIR
☐ CHANGE TO PREVIOUS PLANS	☐ CHANGE TUBING	☐ CHANGE WELL NAME
☐ CHANGE WELL STATUS	☐ COMMINGLE PRODUCING FORMATIONS	☐ CONVERT WELL TYPE
☐ DEEPEN	☐ FRACTURE TREAT	☐ NEW CONSTRUCTION
☐ OPERATOR CHANGE	☐ PLUG AND ABANDON	☐ PLUG BACK
☐ PRODUCTION START OR RESUME	☐ RECLAMATION OF WELL SITE	☐ RECOMPLETE DIFFERENT FORMATION
☐ REPERFORATE CURRENT FORMATION	☐ SIDETRACK TO REPAIR WELL	☐ TEMPORARY ABANDON
☐ TUBING REPAIR	☐ VENT OR FLARE	☐ WATER DISPOSAL
☐ WATER SHUTOFF	☐ SI TA STATUS EXTENSION	☐ APD EXTENSION
☐ WILDCAT WELL DETERMINATION	✓ OTHER	OTHER: Put on Injection

12. DESCRIBE PROPOSED OR COMPLETED OPERATIONS. Clearly show all pertinent details including dates, depths, volumes, etc.

The above reference well was put on injection at 3:30 PM on 02/10/2012.

Accepted by the Utah Division of Oil, Gas and Mining
FOR RECORD ONLY
February 21, 2012

NAME (PLEASE PRINT) Lucy Chavez-Naupoto

PHONE NUMBER 435 646-4874

TITLE Water Services Technician

SIGNATURE N/A

DATE 2/17/2012

RECEIVED: Feb. 17, 2012

Monument Federal 13-4-9-16

Spud Date: 1-6-97
Put on Production: 2-4-97
GL: 5761' KB: 5773'

Initial Production: 65 BOPD, 116 MCFD 0 BWPD

SURFACE CASING

CSG SIZE: 8-5/8"
GRADE: J-55
WEIGHT: 24#
LENGTH: 5 JTS (253')
DEPTH LANDED: 263'
HOLE SIZE: 12-1/4"
CEMENT DATA: 160 skx Class G cement

PRODUCTION CASING

CSG SIZE: 5-1/2"
GRADE: J-55
WEIGHT: 15.5#
LENGTH: 140 jts
HOLE SIZE: 7-7/8"
CEMENT DATA: 275 sks Prem Lite & 500 sks 50/50 Poz mix
CEMENT TOP AT: 785'
DEPTH LANDED: 5925'

TUBING

SIZE/GRADE/WT: 2-7/8"/ J-55 / 6.5#
NO. OF JOINTS: 137jts (4336.2')
SEATING NIPPLE: 2-7/8" (1.10')
SN LANDED AT: 4346.2' KB
CE @ 4350.56'
TOTAL STRING LENGTH: EOT @ 4355' KB

Injection Wellbore Diagram

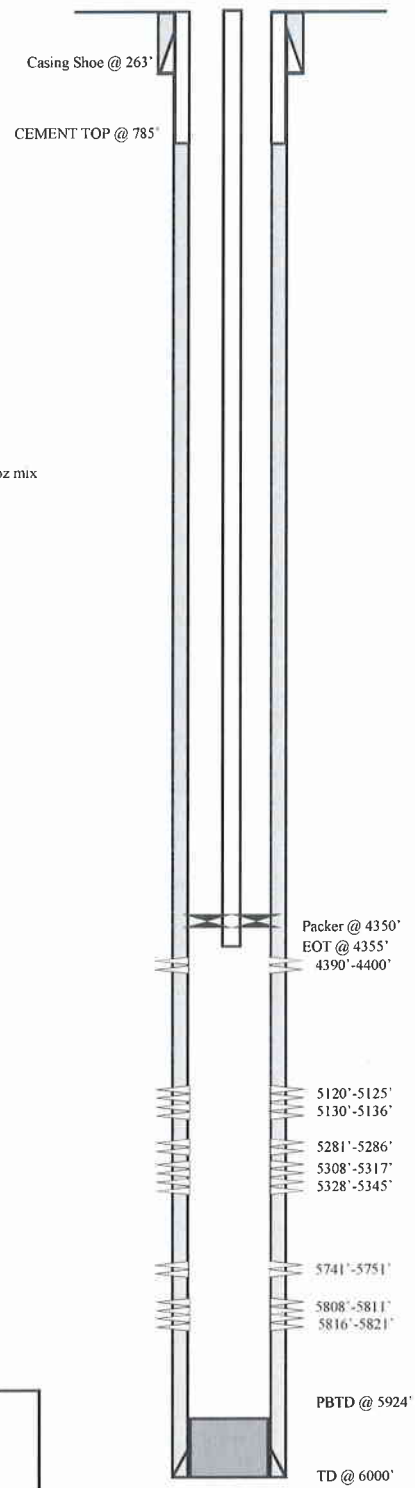

FRAC JOB

01/21/97	**5281'-5345'**	**27,000#'s 320/40 sand, 66,900# 16/30 sand, and 27,678 gals fluid. Treated w/avg rate of 30.8 BPM w/ avg press of 1690 psi. ISIP-1920 psi**
02/13/02		Tubing leak. Update rod and tubing details.
03/13/03		Parted polished rod. Update rod detail.
02/08/05	**5741'-5821'**	**Frac CP1 and CP.5 sands as follows:** 49276#'s of 20/40 sand in 408 bbls of lighting 17 fluid. Treated w/avg press of 3750 psi @ avg rate of 14.3 bpm. ISIP 2400 psi. Calc flush: 5739 gal. Actual flush: 1419 gal.
02/08/05	**5120'-5136'**	**Frac B1 sands as follows:** 40,000#s of 20/40 sand in 380 bbls of lighting 17 fluid. Treated w/avg press of 2189 psi @ avg rate of 24.8 bpm. ISIP 2140 psi. Calc flush: 1965 gal. Actual flush: 4909 gal.
02/09/05	**4390'-4400'**	**Frac GB6 sands as follows:** 25,402#s of 20/40 sand in 268 bbls of lightning 17 fluid. Treated w/avg press of 2095 psi @ avg rate of 24.7 bpm. ISIP 2140 psi. Calc flush: 4388 gal. Actual flush: 4305 gal.
07/11/06		**Tubing Leak.** Rod & Tubing detail updated.
11/22/10		**Parted rods.** Rod & tubing details updated.
01/04/12		**Convert to Injection Well**
01/06/12		**Conversion MIT Finalized** – update tbg detail

PERFORATION RECORD

02/07/05	5816'-5821'	4JSPF	20 holes
02/07/05	5808'-5811'	4JSPF	12 holes
02/07/05	5741'-5751'	4JSPF	40 holes
01/18/97	5328'-5345'	4JSPF	68 holes
01/18/97	5308'-5317'	4JSPF	36 holes
01/18/97	5281'-5286'	4JSPF	20 holes
02/07/05	5130'-5136'	4JSPF	24 holes
02/07/05	5120'-5125'	4JSPF	20 holes
02/09/05	4390'-4400'	4JSPF	40 holes

NEWFIELD

Monument Federal 13-4-9-16
2050 FSL & 660 FWL
NWSW Section 4-T9S-R16E
Duchesne Co, Utah
API #43-013-31716; Lease #UTU-73086

LCN 01/10/12

GARY R. HERBERT
Governor

GREGORY S. BELL
Lieutenant Governor

State of Utah
DEPARTMENT OF NATURAL RESOURCES
MICHAEL R. STYLER
Executive Director

Division of Oil, Gas and Mining
JOHN R. BAZA
Division Director

UNDERGROUND INJECTION CONTROL PERMIT

Cause No. UIC-374

Operator: Newfield Production Company

Well: Monument Federal 13-4-9-16

Location: Section 4, Township 9 South, Range 16 East

County: Duchesne

API No.: 43-013-31716

Well Type: Enhanced Recovery (waterflood)

Stipulations of Permit Approval

1. Approval for conversion to Injection Well issued on May 26, 2011.
2. Maximum Allowable Injection Pressure: 1,886 psig
3. Maximum Allowable Injection Rate: (restricted by pressure limitation)
4. Injection Interval: Green River Formation (4,163' – 5,924')
5. Any subsequent wells drilled within a ½ mile radius of this well shall have production casing cement brought up to or above the top of the unitized interval for the Greater Monument Butte Unit.

Approved by: John Rogers
Associate Director

1/19/2012
Date

JR/MLR/js
cc: Bruce Suchomel, Environmental Protection Agency
Bureau of Land Management, Vernal
Eric Sundberg, Newfield Production Company, Denver
Newfield Production Company, Myton
Duchesne County
Well File
N:\O&G Reviewed Docs\ChronFile\UIC\Newfield

STATE OF UTAH
DEPARTMENT OF NATURAL RESOURCES
DIVISION OF OIL, GAS, AND MINING

FORM 9

5.LEASE DESIGNATION AND SERIAL NUMBER: UTU-73086

SUNDRY NOTICES AND REPORTS ON WELLS

Do not use this form for proposals to drill new wells, significantly deepen existing wells below current bottom-hole depth, reenter plugged wells, or to drill horizontal laterals. Use APPLICATION FOR PERMIT TO DRILL form for such proposals.

6. IF INDIAN, ALLOTTEE OR TRIBE NAME:

7.UNIT or CA AGREEMENT NAME: GMBU (GRRV)

1. TYPE OF WELL Water Injection Well

8. WELL NAME and NUMBER: MON FED 13-4-9-16

2. NAME OF OPERATOR: NEWFIELD PRODUCTION COMPANY

9. API NUMBER: 43013317160000

3. ADDRESS OF OPERATOR: Rt 3 Box 3630 , Myton, UT, 84052

PHONE NUMBER: 435 646-4825 Ext

9. FIELD and POOL or WILDCAT: MONUMENT BUTTE

4. LOCATION OF WELL
FOOTAGES AT SURFACE: 2050 FSL 0660 FWL
QTR/QTR, SECTION, TOWNSHIP, RANGE, MERIDIAN: Qtr/Qtr: NWSW Section: 04 Township: 09.0S Range: 16.0E Meridian: S

COUNTY: DUCHESNE

STATE: UTAH

11. CHECK APPROPRIATE BOXES TO INDICATE NATURE OF NOTICE, REPORT, OR OTHER DATA

TYPE OF SUBMISSION

- ☐ NOTICE OF INTENT — Approximate date work will start:
- ✓ SUBSEQUENT REPORT — Date of Work Completion:
- ☐ SPUD REPORT — Date of Spud:
- ☐ DRILLING REPORT — Report Date:

TYPE OF ACTION

☐ ACIDIZE	☐ ALTER CASING	☐ CASING REPAIR
☐ CHANGE TO PREVIOUS PLANS	☐ CHANGE TUBING	☐ CHANGE WELL NAME
☐ CHANGE WELL STATUS	☐ COMMINGLE PRODUCING FORMATIONS	☐ CONVERT WELL TYPE
☐ DEEPEN	☐ FRACTURE TREAT	☐ NEW CONSTRUCTION
☐ OPERATOR CHANGE	☐ PLUG AND ABANDON	☐ PLUG BACK
☐ PRODUCTION START OR RESUME	☐ RECLAMATION OF WELL SITE	☐ RECOMPLETE DIFFERENT FORMATION
☐ REPERFORATE CURRENT FORMATION	☐ SIDETRACK TO REPAIR WELL	☐ TEMPORARY ABANDON
☐ TUBING REPAIR	☐ VENT OR FLARE	☐ WATER DISPOSAL
☐ WATER SHUTOFF	☐ SI TA STATUS EXTENSION	☐ APD EXTENSION
☐ WILDCAT WELL DETERMINATION	☐ OTHER	OTHER:

12. DESCRIBE PROPOSED OR COMPLETED OPERATIONS. Clearly show all pertinent details including dates, depths, volumes, etc.

Accepted by the Utah Division of Oil, Gas and Mining
FOR RECORD ONLY
December 07, 2016

NAME (PLEASE PRINT) Lucy Chavez-Naupoto

PHONE NUMBER 435 646-4874

TITLE Water Services Technician

SIGNATURE N/A

DATE 12/5/2016

RECEIVED: Dec. 07, 2016

Mechanical Integrity Test
Casing or Annulus Pressure Test

Newfield Production Company
Rt. 3 Box 3630
Myton, UT 84052
435-646-3721

Witness: Amy Doebele **Date** 12/01/16 **Time** 1:20 am/pm
Test Conducted by: Michael Jensen
Others Present: Jeremy Price

Well: Monument Federal 13-4-9-16 **Field:** Monument Butte
Well Location: NW/SW Sec. 4, T9S, R16E **API No:** 43-013-31716

Time	Casing Pressure	
0 min	1150	psig
5	1150	psig
10	1150	psig
15	1150	psig
20		psig
25		psig
30 min		psig
35		psig
40		psig
45		psig
50		psig
55		psig
60 min		psig

Tubing pressure: 1667 psig

Result: Pass Fail

Signature of Witness: Amy Doebele
Signature of Person Conducting Test: Michael Jensen

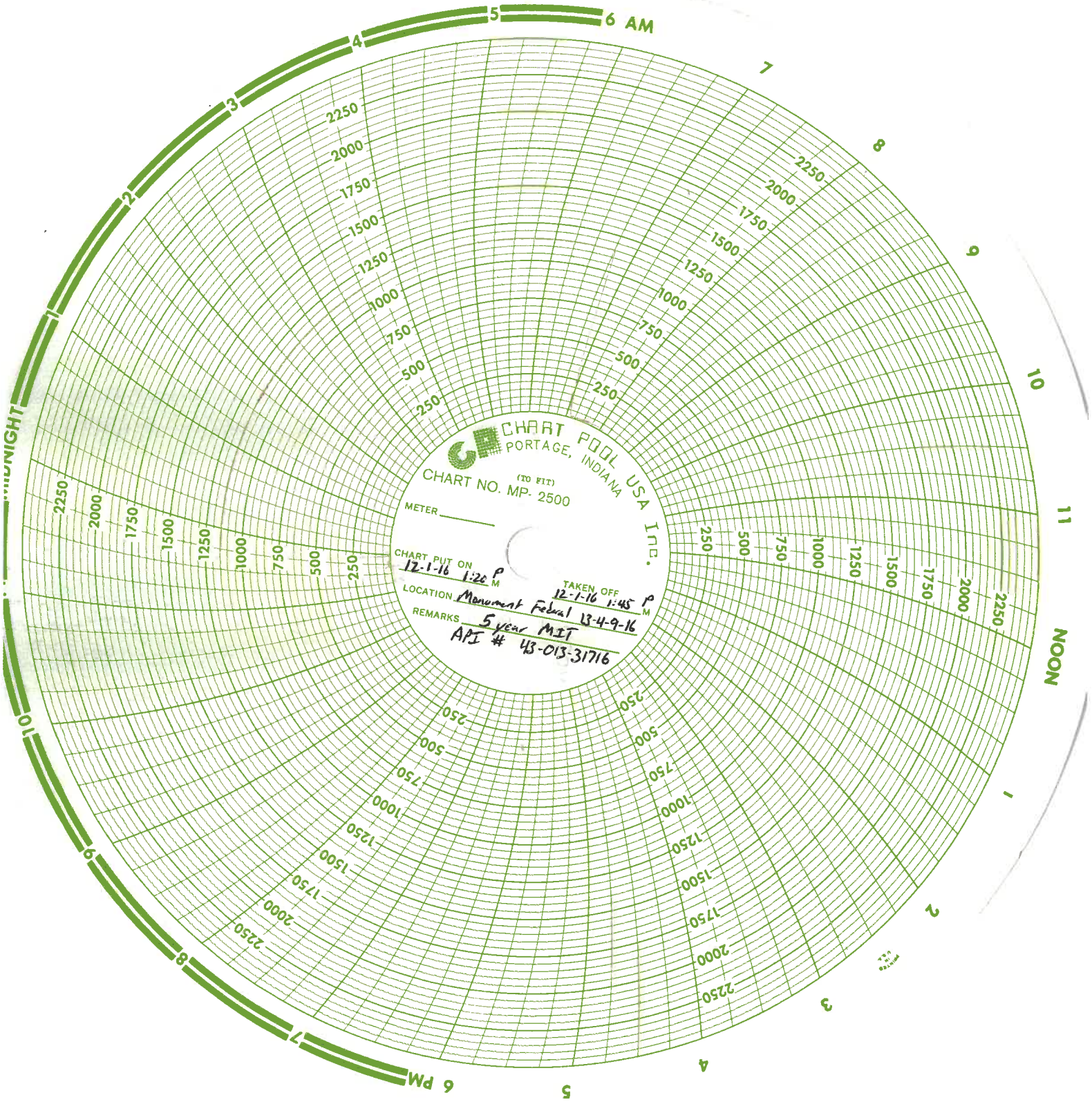
CHART POOL USA Inc.
PORTAGE, INDIANA
(TO FIT)
CHART NO. MP- 2500
METER
CHART PUT ON 12-1-16 1:20 P M
TAKEN OFF 12-1-16 1:45 P M
LOCATION Monument Federal 13-4-9-16
REMARKS 5 year MIT
API # 43-013-31716
6 AM
NOON
6 PM
MIDNIGHT

STATE OF UTAH
DEPARTMENT OF NATURAL RESOURCES
DIVISION OF OIL, GAS, AND MINING

FORM 9

5.LEASE DESIGNATION AND SERIAL NUMBER: UTU-73086

SUNDRY NOTICES AND REPORTS ON WELLS

Do not use this form for proposals to drill new wells, significantly deepen existing wells below current bottom-hole depth, reenter plugged wells, or to drill horizontal laterals. Use APPLICATION FOR PERMIT TO DRILL form for such proposals.

6. IF INDIAN, ALLOTTEE OR TRIBE NAME:

7.UNIT or CA AGREEMENT NAME: GMBU (GRRV)

1. TYPE OF WELL Water Injection Well

8. WELL NAME and NUMBER: MON FED 13-4-9-16

2. NAME OF OPERATOR: NEWFIELD PRODUCTION COMPANY

9. API NUMBER: 43013317160000

3. ADDRESS OF OPERATOR: Rt 3 Box 3630 , Myton, UT, 84052

PHONE NUMBER: 435 646-4825 Ext

9. FIELD and POOL or WILDCAT: MONUMENT BUTTE

4. LOCATION OF WELL
FOOTAGES AT SURFACE: 2050 FSL 0660 FWL
QTR/QTR, SECTION, TOWNSHIP, RANGE, MERIDIAN: Qtr/Qtr: NWSW Section: 04 Township: 09.0S Range: 16.0E Meridian: S

COUNTY: DUCHESNE

STATE: UTAH

11. CHECK APPROPRIATE BOXES TO INDICATE NATURE OF NOTICE, REPORT, OR OTHER DATA

TYPE OF SUBMISSION

- ☐ NOTICE OF INTENT — Approximate date work will start:
- ✓ SUBSEQUENT REPORT — Date of Work Completion: 12/1/2016
- ☐ SPUD REPORT — Date of Spud:
- ☐ DRILLING REPORT — Report Date:

TYPE OF ACTION

☐ ACIDIZE	☐ ALTER CASING	☐ CASING REPAIR
☐ CHANGE TO PREVIOUS PLANS	☐ CHANGE TUBING	☐ CHANGE WELL NAME
☐ CHANGE WELL STATUS	☐ COMMINGLE PRODUCING FORMATIONS	☐ CONVERT WELL TYPE
☐ DEEPEN	☐ FRACTURE TREAT	☐ NEW CONSTRUCTION
☐ OPERATOR CHANGE	☐ PLUG AND ABANDON	☐ PLUG BACK
☐ PRODUCTION START OR RESUME	☐ RECLAMATION OF WELL SITE	☐ RECOMPLETE DIFFERENT FORMATION
☐ REPERFORATE CURRENT FORMATION	☐ SIDETRACK TO REPAIR WELL	☐ TEMPORARY ABANDON
☐ TUBING REPAIR	☐ VENT OR FLARE	☐ WATER DISPOSAL
☐ WATER SHUTOFF	☐ SI TA STATUS EXTENSION	☐ APD EXTENSION
☐ WILDCAT WELL DETERMINATION	✓ OTHER	OTHER: 5 YR MIT

12. DESCRIBE PROPOSED OR COMPLETED OPERATIONS. Clearly show all pertinent details including dates, depths, volumes, etc.

On 11/26/2016 Amy Doebele with the State of Utah DOGM was contacted concerning the 5 Year MIT on the above listed well. On 12/01/2016 the casing was pressured up to 1150 psig and charted for 30 minutes with no pressure loss. The well was not injecting during the test. The tubing pressure was 1667 psig during the test. There was a State representative available to witness the test - Amy Doebele.

Accepted by the Utah Division of Oil, Gas and Mining
FOR RECORD ONLY
December 07, 2016

NAME (PLEASE PRINT)	PHONE NUMBER	TITLE
Lucy Chavez-Naupoto	435 646-4874	Water Services Technician

SIGNATURE	DATE
N/A	12/5/2016

RECEIVED: Dec. 05, 2016

Mechanical Integrity Test
Casing or Annulus Pressure Test

Newfield Production Company
Rt. 3 Box 3630
Myton, UT 84052
435-646-3721

Witness: Amy Doebele **Date** 12/01/16 **Time** 1:20 am/pm
Test Conducted by: Michael Jensen
Others Present: Jeremy Price

Well: Monument Federal 13-4-9-16 **Field:** Monument Butte
Well Location: NW/SW Sec. 4, T9S, R16E **API No:** 43-013-31716

Time	Casing Pressure	
0 min	1150	psig
5	1150	psig
10	1150	psig
15	1150	psig
20		psig
25		psig
30 min		psig
35		psig
40		psig
45		psig
50		psig
55		psig
60 min		psig

Tubing pressure: 1667 psig

Result: Pass Fail

Signature of Witness: Amy Doebele
Signature of Person Conducting Test: Michael Jensen

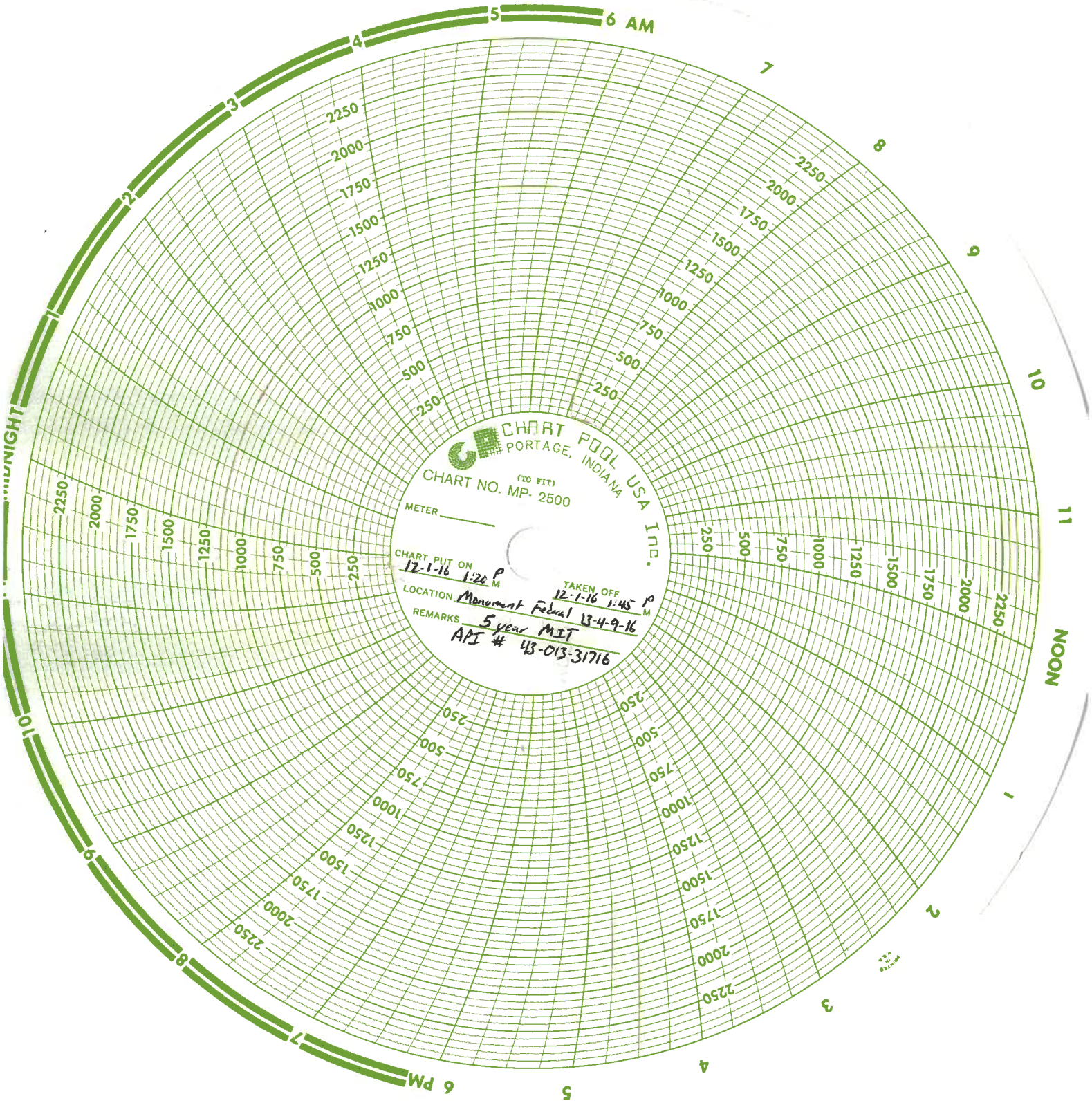
CHART POOL USA Inc.
PORTAGE, INDIANA
(TO FIT)
CHART NO. MP- 2500
METER
CHART PUT ON 12-1-16 1:20 PM
TAKEN OFF 12-1-16 1:45 PM
LOCATION Monument Federal 13-4-9-16
REMARKS 5 year MIT
API # 43-013-31716
6 AM
NOON
6 PM
MIDNIGHT