EQUITABLE RESOURCES
ENERGY COMPANY
BALCRON OIL DIVISION

1601 Lewis Avenue
P.O. Box 21017
Billings, MT 59104

Office: (406) 259-7860
FAX: (406) 245-1365
FAX: (406) 245-1361

August 30, 1993

-- VIA FEDERAL EXPRESS --

Bureau of Land Management
170 South 500 East
Vernal, UT 84078

Gentlemen:

Enclosed are Applications for Permit to Drill the wells on the enclosed list. We plan to drill these four wells before the end of 1993. If you foresee any problem with that plan, I would appreciate it if you would give me a call.

Both archeology and paleontology reports on the wellsites and access road locations have been ordered and will be sent to you as soon as they are completed.

As operator, we hereby request that the status of these wells be held tight for the maximum period allowed by Federal regulations.

Sincerely,

Bobbie Schuman

Bobbie Schuman
Coordinator of Operations,
Environmental and Regulatory Affairs

/rs

Enclosures

cc: Utah Division of Oil, Gas and Mining

EQUITABLE RESOURCES
ENERGY COMPANY
BALCRON OIL DIVISION

1601 Lewis Avenue
P.O. Box 21017
Billings, MT 59104

Office: (406) 259-7860
FAX: (406) 245-1365
FAX: (406) 245-1361

August 30, 1993

State of Utah
Division of Oil, Gas & Mining
355 West North Temple
Salt Lake City, UT 84180

Gentlemen:

As operator, we hereby request that the status of the wells on the attached list be held tight for the maximum period allowed by State regulations.

Sincerely,

Bobbie Schuman

Bobbie Schuman
Coordinator of Operations,
Environmental and Regulatory Affairs

/rs

Attachment

Balcron Monument Federal #41-14J
NE NE Section 14, T9S, R16E
Duchesne County, Utah
363.3' FNL, 600' FEL
FLS #U-096550

Balcron Monument Federal #12-12J
SW NW Section 12, T9S, R16E
Duchesne County, Utah
1980' FNL, 660' FWL
FLS #U-096550

Balcron Monument Federal #14-12J
SW SW Section 12, T9S, R16E
Duchesne County, Utah
660' FSL, 660' FWL
FLS #U-035521-A

Balcron Monument Federal #24-12J
SE SW Section 12, T9S, R16E
Duchesne County, Utah
539' FSL, 1777' FWL
FLS #U-035521-A

FORM 3

CONFIDENTIAL

STATE OF UTAH
DIVISION OF OIL, GAS AND MINING

APPLICATION FOR PERMIT TO DRILL, DEEPEN, OR PLUG BACK

1a. Type of Work: DRILL [X] DEEPEN [ ] PLUG BACK [ ]

b. Type of Well: Oil Well [X] Gas Well [ ] Other — Single Zone [ ] Multiple Zone [ ]

2. Name of Operator: Equitable Resources Energy Company, Balcron Oil Division

3. Address of Operator: P.O. Box 21017; Billings, MT 59104

4. Location of Well (Report location clearly and in accordance with any State requirements.*)
At surface: SE SW Section 12, T9S, R16E 539' FSL, 1777' FWL
At proposed prod. zone

5. Lease Designation and Serial No.: Federal #U-035521-A

6. If Indian, Allottee or Tribe Name: n/a

7. Unit Agreement Name: Jonah Unit

8. Farm or Lease Name: Balcron Monument Federal

9. Well No.: #24-12J

10. Field and Pool, or Wildcat: Monument Butte/Green River

11. QQ, Sec., T., R., M., or Blk. and Survey or Area: Sec. 12, T9S, R16E

14. Distance in miles and direction from nearest town or post office*: Approximately 13 miles SW of Myton, Utah

12. County or Parrish: Duchesne

13. State: UTAH

15. Distance from proposed* location to nearest property or lease line, ft. (Also to nearest drlg. line, if any)

16. No. of acres in lease

17. No. of acres assigned to this well

18. Distance from proposed location* to nearest well, drilling, completed, or applied for, on this lease, ft.

19. Proposed depth: ~~5,900'~~ 5,700'

20. Rotary or cable tools: Rotary

21. Elevations (Show whether DF, RT, GR, etc.): 4,495.5' GL

22. Approx. date work will start*: Upon APD approval

23. PROPOSED CASING AND CEMENTING PROGRAM

Size of Hole	Size of Casing	Weight per Foot	Setting Depth	Quantity of Cement
See attached				

Operator plans to drill well in accordance with attached Federal Application for Permit to Drill.

CONFIDENTIAL

RECEIVED
SEP 01 1993

DIVISION OF
OIL, GAS & MINING

IN ABOVE SPACE DESCRIBE PROPOSED PROGRAM: If proposal is to deepen or plug back, give data on present productive zone and proposed new productive zone. If proposal is to drill or deepen directionally, give pertinent data on subsurface locations and measured and true vertical depths. Give blowout preventer program, if any.

24. I hereby certify that this report is true and complete to the best of my knowledge.

Signed: Bobbie Schuman Title: Coordinator of Environmental and Regulatory Affairs Date: August 30, 1993

Bobbie Schuman

(This space for Federal or State office use)

API NO. 43-013-31409 Approval Date: APPROVED BY THE STATE OF UTAH DIVISION OF OIL, GAS, AND MINING

Approved by: Title: Date:

Conditions of approval, if any:

DATE: 9/7/93
BY: [illegible]

Spacing 649-2-3

*See Instructions On Reverse Side

(3/89)

Form 3160-3
(November 1983)
(formerly 9-331C)

SUBMIT IN TRIPLICATE* (Other instructions on reverse side)

Form approved.
Budget Bureau No. 1004-0136
Expires August 31, 1985

UNITED STATES
DEPARTMENT OF THE INTERIOR
BUREAU OF LAND MANAGEMENT

APPLICATION FOR PERMIT TO DRILL, DEEPEN, OR PLUG BACK

1a. TYPE OF WORK: DRILL [X] DEEPEN [ ] PLUG BACK [ ]

b. TYPE OF WELL: OIL WELL [X] GAS WELL [ ] OTHER — SINGLE ZONE [ ] MULTIPLE ZONE [ ]

2. NAME OF OPERATOR: EQUITABLE RESOURCES ENERGY COMPANY, Balcron Oil Division — CONFIDENTIAL

3. ADDRESS OF OPERATOR: P.O. Box 21017; Billings, MT 59104

4. LOCATION OF WELL (Report location clearly and in accordance with any State requirements.*)
At surface: SE SW Section 12, T9S, R16E 539' FSL, 1777' FWL
At proposed prod. zone

5. LEASE DESIGNATION AND SERIAL NO.: U-035521-A

6. IF INDIAN, ALLOTTEE OR TRIBE NAME: n/a

7. UNIT AGREEMENT NAME: Jonah Unit

8. FARM OR LEASE NAME: Balcron Monument Federal

9. WELL NO.: #24-12J

10. FIELD AND POOL, OR WILDCAT: Monument Butte/Grn. River

11. SEC., T., R., M., OR BLK. AND SURVEY OR AREA: Sec. 12, T9S, R16E

12. COUNTY OR PARISH: Duchesne

13. STATE: UTAH

14. DISTANCE IN MILES AND DIRECTION FROM NEAREST TOWN OR POST OFFICE*: Approximately 13 miles SW of Myton, Utah

15. DISTANCE FROM PROPOSED* LOCATION TO NEAREST PROPERTY OR LEASE LINE, FT. (Also to nearest drlg. unit line, if any)

16. NO. OF ACRES IN LEASE

17. NO. OF ACRES ASSIGNED TO THIS WELL

18. DISTANCE FROM PROPOSED LOCATION* TO NEAREST WELL, DRILLING, COMPLETED, OR APPLIED FOR, ON THIS LEASE, FT.

19. PROPOSED DEPTH: 5,700'

20. ROTARY OR CABLE TOOLS: Rotary

21. ELEVATIONS (Show whether DF, RT, GR, etc.): 5,495.5' GL

22. APPROX. DATE WORK WILL START*: Upon APD Approval

23. PROPOSED CASING AND CEMENTING PROGRAM

SIZE OF HOLE	SIZE OF CASING	WEIGHT PER FOOT	SETTING DEPTH	QUANTITY OF CEMENT
See drilling program/casing design				

EXHIBITS ATTACHED

"A" PROPOSED DRILLING PROGRAM
"B" PROPOSED SURFACE USE PROGRAM
"C" GEOLOGIC PROGNOSIS
"D" DRILLING PROGRAM/CASING DESIGN
"E" EVIDENCE OF BOND COVERAGE
"F" SURVEY PLAT
"G" RIG LAYOUT
"H" BOPE DIAGRAM
"I" EXISTING ROADS (Map A)
"J" PLANNED ACCESS (Map B)
"K" EXISTING WELLS (Map C)
"L" CUT & FILL DIAGRAM

RECEIVED
SEP 1 1993
DIVISION OF OIL, GAS & MINING

SELF CERTIFICATION: I hereby certify that I am authorized, by proper lease interest owner, to conduct these operations associated with the application. Bond coverage pursuant to 43 CFR 3104 for lease activities is being provided by Equitable Resources Energy Company as principal and Safeco Insurance Company of America as surety under BLM Bond No. MT 0576 (Nationwide Oil & Gas Bond #5547188) who will be responsible for compliance with all of the terms and conditions of that portion of the lease associated with this application.

IN ABOVE SPACE DESCRIBE PROPOSED PROGRAM: If proposal is to deepen or plug back, give data on present productive zone and proposed new productive zone. If proposal is to drill or deepen directionally, give pertinent data on subsurface locations and measured and true vertical depths. Give blowout preventer program, if any.

24.

SIGNED Bobbie Schuman — TITLE Coordinator of Environmental and Regulatory Affairs — DATE August 30, 1993

Bobbie Schuman

(This space for Federal or State office use)

PERMIT NO. _____ APPROVAL DATE _____

APPROVED BY _____ TITLE _____ DATE _____

CONDITIONS OF APPROVAL, IF ANY:

*See Instructions On Reverse Side

Title 18 U.S.C. Section 1001, makes it a crime for any person knowingly and willfully to make to any department or agency of the United States any false, fictitious or fraudulent statements or representations as to any matter within its jurisdiction.

EQUITABLE RESOURCES ENERGY COMPANY
Balcron Oil Division
Balcron Monument Federal #24-12J
SE SW Section 12-T9S-R16E
Duchesne County, Utah

In accordance with requirements outlined in 43 CFR 3162-3.1 (d):

1. ESTIMATED IMPORTANT GEOLOGICAL MARKERS:

See Geologic Prognosis (EXHIBIT "C")

2. ESTIMATED DEPTHS OF ANTICIPATED OIL, GAS OR WATER:

See Geologic Prognosis (EXHIBIT "C)

3. OPERATOR'S MINIMUM SPECIFICATIONS FOR PRESSURE CONTROL:

a. EXHIBIT "H" is a schematic of the BOP equipment and choke manifold. A 2M system will be used. The BOPE will be installed after setting 8-5/8" casing at 260'. The blind rams and pipe rams will be tested to 1500 psi. Pipe rams will be operationally checked each 24-hour period and blind rams each time pipe is pulled out of the hole.

b. The BOPE will be tested to 1500 psi when initially installed, whenever any seal subject to test pressure is broken, and following related repairs. The pipe and blind rams will be activated at least weekly and on every trip the pipe and blind rams will be activated.

c. An accumulator of sufficient capacity to open the hydraulically-controlled choke valve lines (if so equipped), close all rams, and retain a minimum of 200 psi above precharge on the closing manifold without the use of the closing unit pumps will be installed during the drilling of this well.

d. An upper kelly cock will be used during the drilling of this well.

e. Visual mud monitoring equipment will be used to detect volume changes indicating loss or gain in circulating fluid volume.

f. Sufficient quantities of mud materials will be maintained or readily accessible for the purpose of assuring well control.

EXHIBIT "F"

T9S, R16E, S.L.B. & M.

EQUITABLE RESOURCES ENERGY CO.

WELL LOCATION, BALCRON MONUMENT FEDERAL #24-12J, LOCATED AS SHOWN IN THE SE 1/4 SW 1/4 OF SECTION 12, T9S, R16E, S.L.B. & M, DUCHESNE COUNTY UTAH.

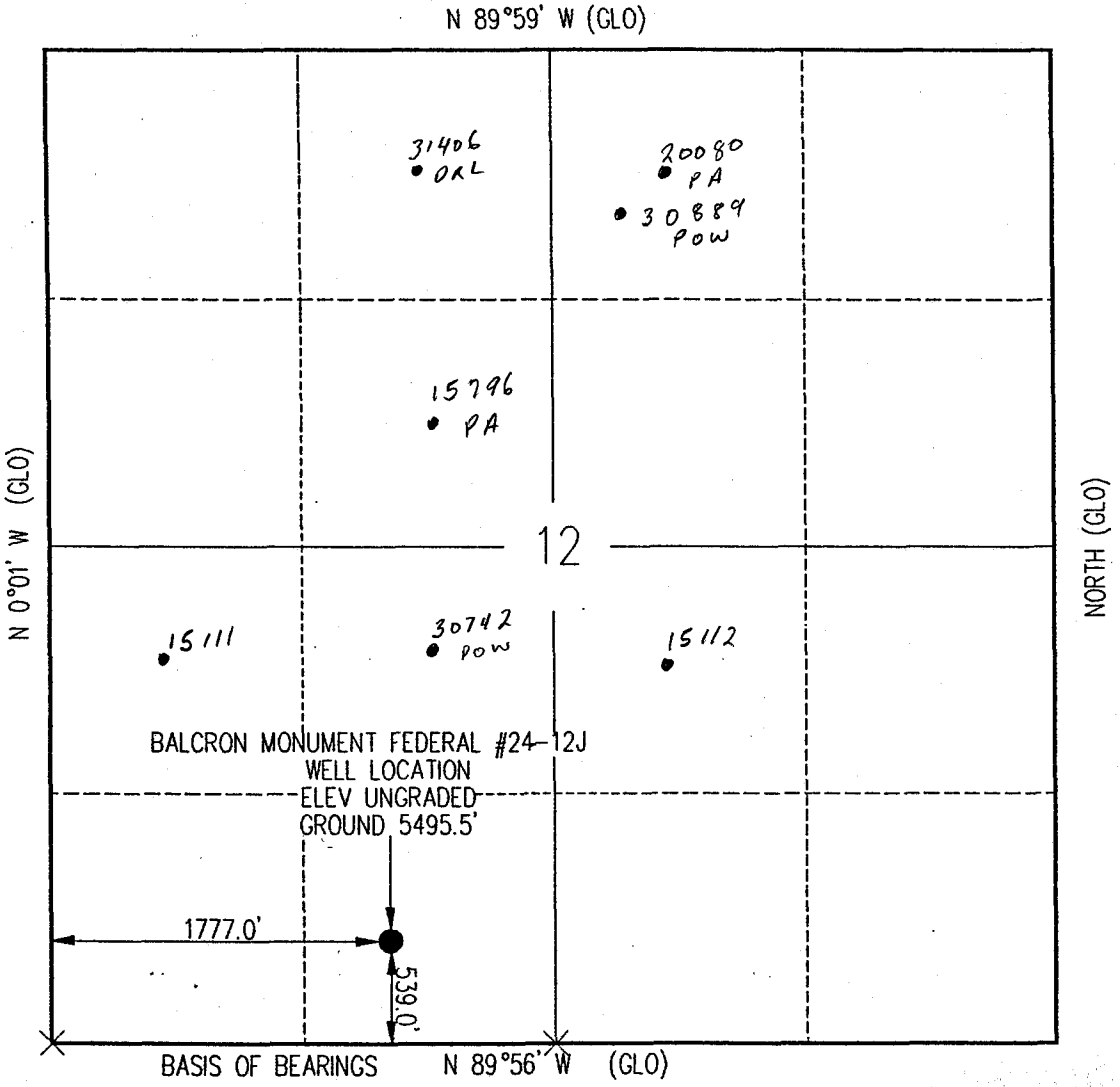

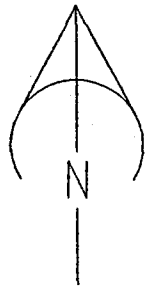

THIS IS TO CERTIFY THAT THE ABOVE PLAT WAS PREPARED FROM FIELD NOTES OF ACTUAL SURVEYS MADE BY ME OR UNDER MY SUPERVISION AND THAT THE SAME ARE TRUE AND CORRECT TO THE BEST OF MY KNOWLEDGE AND BELIEF.

REGISTERED LAND SURVEYOR NO. 3154 STATE OF UTAH

REGISTERED LAND SURVEYOR
REGISTRATION NO. 3154
STATE OF UTAH

X = SECTION CORNERS LOCATED
BASIS OF BEARINGS; G.L.O. PLAT 1911
BASIS OF ELEV; U.S.G.S. 7-1/2 min QUAD (MYTON SE)

SEP 1 1993

WEATHER: CLEAR & HOT	
DATE: 8/4/93	
SCALE: 1" = 1000'	
SURVEYED BY: GS ZD	
FILE: MF 24-12	

TRI-STATE
LAND SURVEYING INC.
38 WEST 100 NORTH, VERNAL, UTAH 84078
801-781-2501

EXHIBIT "G"

EQUITABLE RESOURCES ENERGY CO.

BALCRON MONUMENT FEDERAL #24-12J
WELLSITE LAYOUT

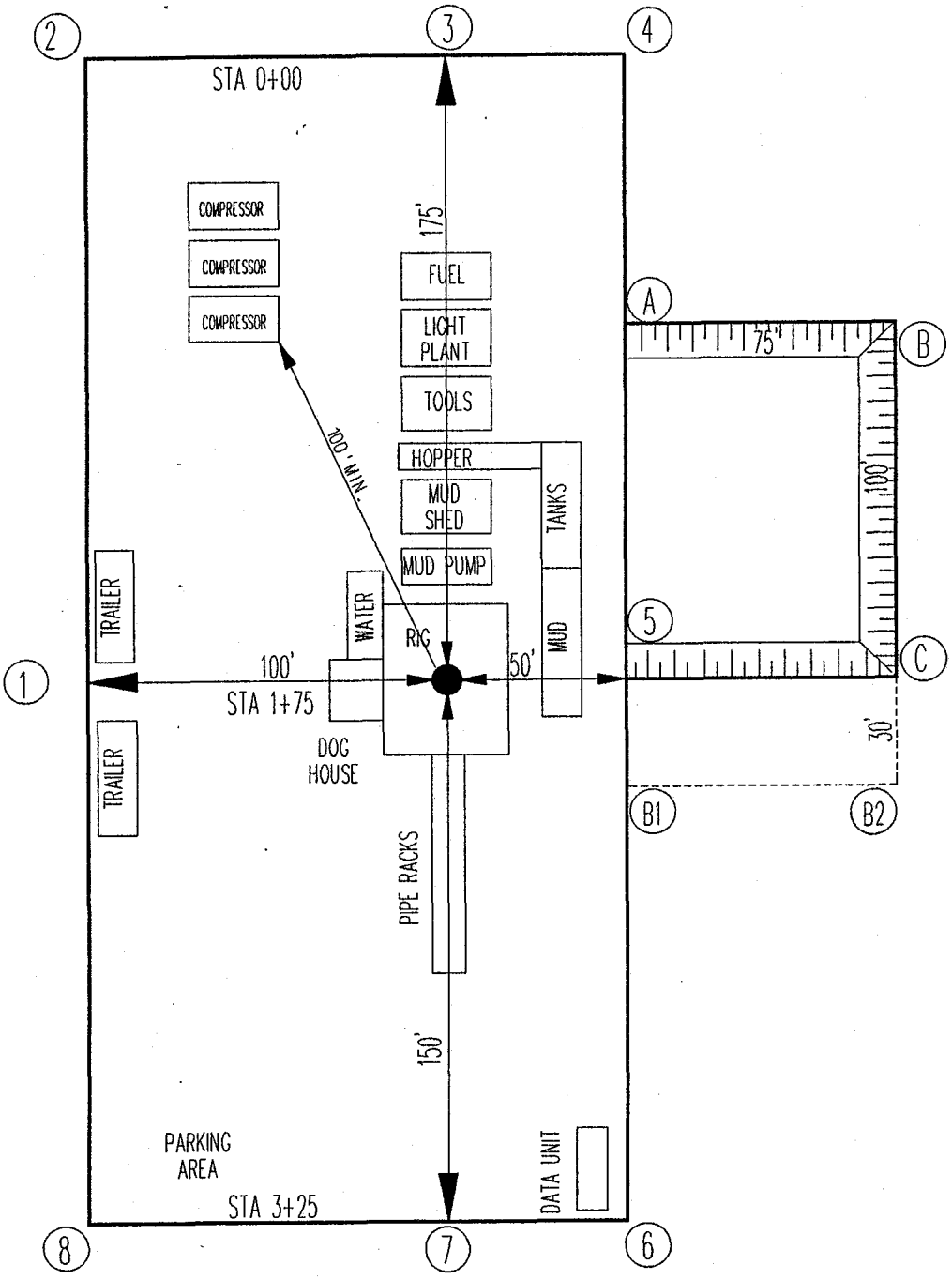

RECEIVED

SEP 1 1993

TRI-STATE
LAND SURVEYING, INC.
38 WEST 100 NORTH, VERNAL, UTAH 84078
801-781-2501

EXHIBIT II

UNION DRILLING RIG #17

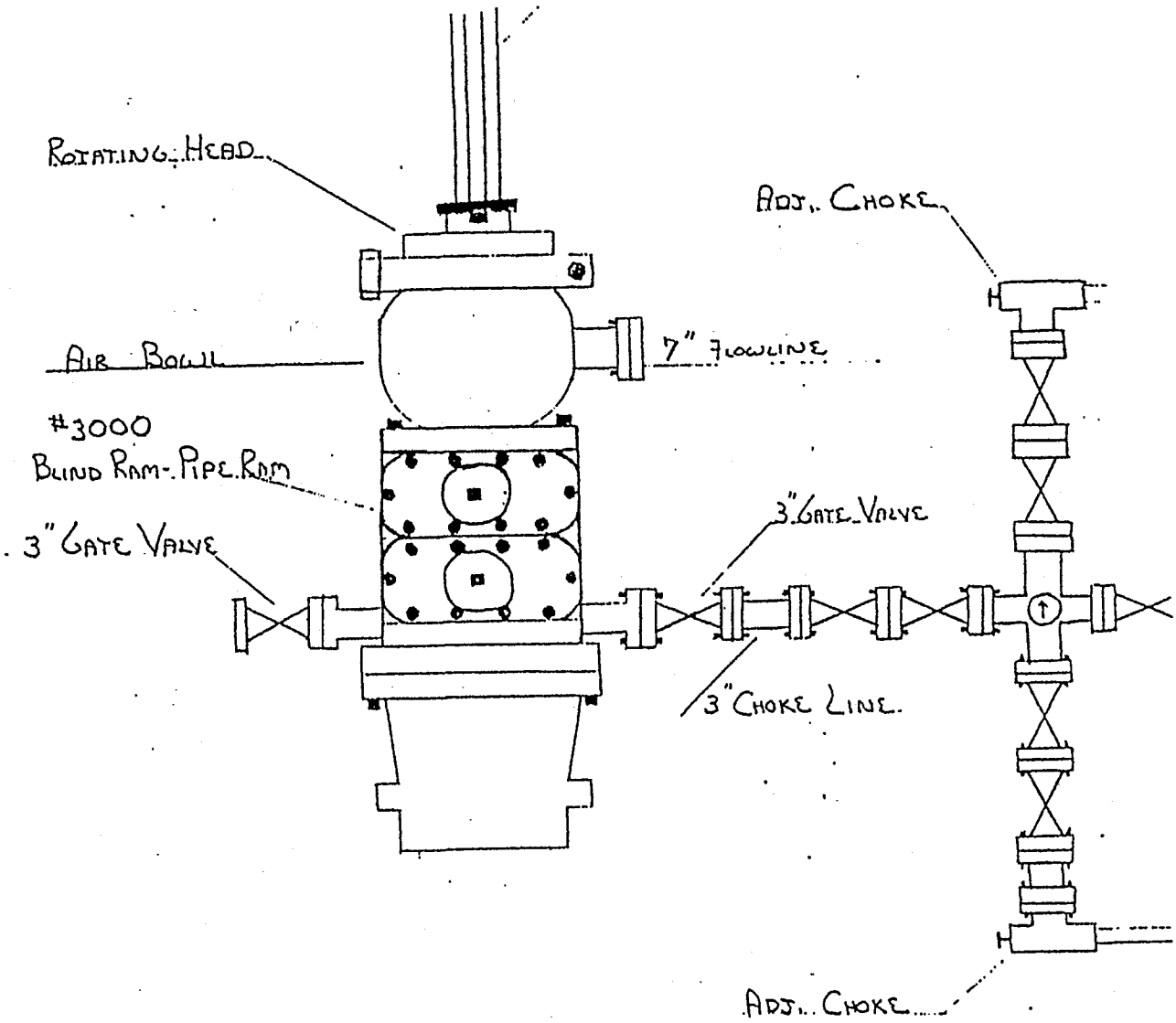

#3000 Stack

SEP 1 1993

EXHIBIT "I"

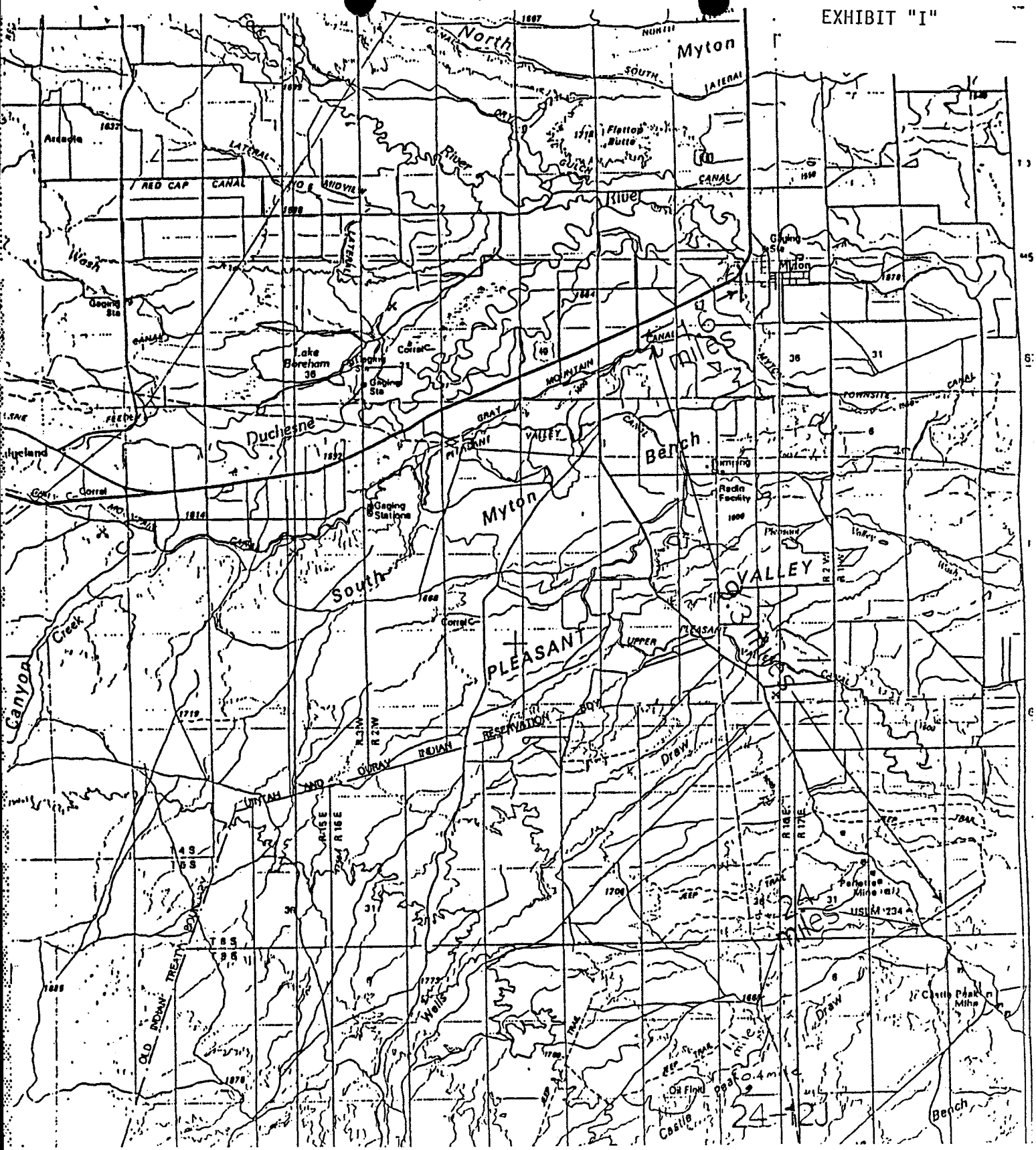

NORTH

EQUITABLE RESOURCES ENERGY CO.

MONUMENT FEDERAL #24-12J

MAP "A"

TRI-STATE
LAND SURVEYING, INC.
38 WEST 100 NORTH, VERNAL, UTAH 84078
801-781-2501

EXHIBIT "J"

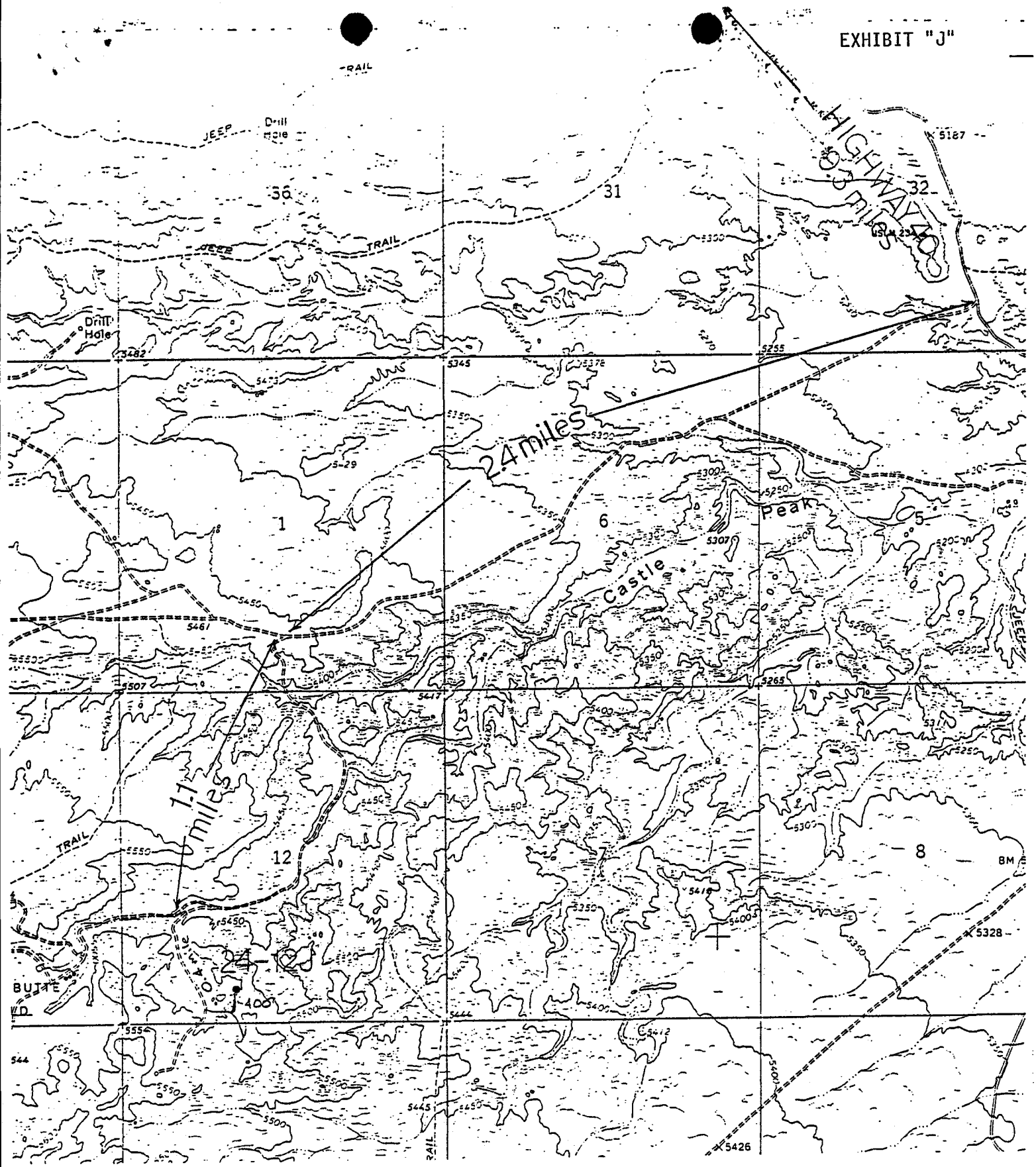

NORTH

EQUITABLE RESOURCES ENERGY CO.

MONUMENT FEDERAL #24-12J

MAP "B"

TRI-STATE
LAND SURVEYING, INC.
38 WEST 100 NORTH, VERNAL, UTAH 84078
801-781-2501

EXHIBIT "K"

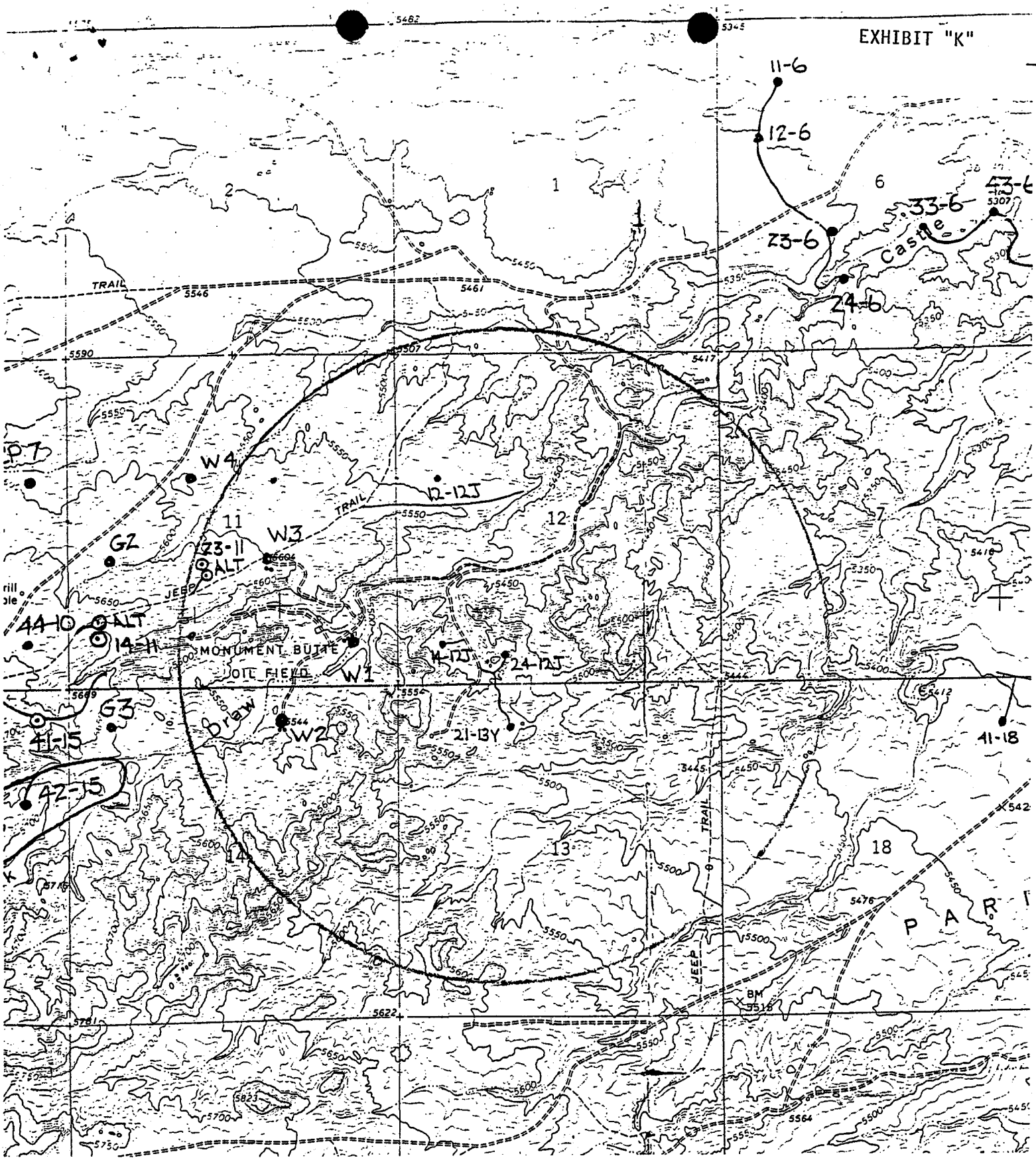

NORTH

EQUITABLE RESOURCES ENERGY CO.

MONUMENT FEDERAL #24-12J

MAP "C"

TRI-STATE
LAND SURVEYING, INC.
38 WEST 100 NORTH, VERNAL, UTAH 84078
801-781-2501

4. PROPOSED CASING AND CEMENTING PROGRAM:

a. Surface casing will be set in the Uinta formation to approximately 260' and cemented to surface.

b. All potentially productive hydrocarbon zones will be isolated.

c. Casing designs are based on factors of burst: 1.25, collapse: 1.125, and joint strength: 1.8.

d. All casing strings will be pressure tested to 0.22 psi/ft. of casing string length or 1500 psi whichever is greater (not to exceed 70% of yield).

E. For details of casing, cement program, drilling fluid program, and proposed mud program, see the following two attachments:

Drilling Program/Casing Design (EXHIBIT "D")
Geologic Prognosis (EXHIBIT "C")

5. HAZARDOUS PRESSURES, TEMPERATURES, FLUIDS/GASSES EXPECTED:

a. Expected bottom hole temperature is 125 degrees F. Expected bottom hole pressure is 1500 psi.

b. No abnormal pressures or temperatures have been noted or reported in wells drilled to the Green River formation in this area.

c. No dangerous levels of hydrogen sulfide, hazardous fluids, or gasses have been found, reported, or known to exist at the depth to be drilled in this well, in this area.

6. ANTICIPATED STARTING DATE AND DURATION OF OPERATIONS:

a. The drilling operations for this well will begin prior to September 30, 1993.

b. These drilling operations should be completed within 12 days after spudding the well depending on weather and hole conditions.

c. If the well is productive, a sundry notice and plat showing exact installed facilities will be submitted.

d. If this well is non-productive, a sundry notice will be filed with the BLM District Office within 30 days following completion of the well for abandonment.

EXHIBIT "B"

Multi-Point Surface Use and Operations Plan

EQUITABLE RESOURCES ENERGY COMPANY
BALCRON OIL DIVISION
BALCRON FEDERAL #24-12J
SE SW SECTION 12, T9S, R16E
DUCHESNE COUNTY, UTAH

1. Existing Roads: Refer to Maps "A" & "B" (shown in RED)

A. The proposed well site is staked and four reference stakes are present. 150' & 200' West and 200' & 250' South.

B. The Federal #24-12J is located 13 miles Southwest of Myton Utah in the SE1/4 SW1/4 Section 12, T9S, R16E, SLB&M, Duchesne County, Utah. To reach the 24-12J, proceed West from Myton, Utah along U.S. Highway 40 for 1.6 miles to the junction of this highway and Sand Wash road; Proceed South along the Sand Wash road approximately 9.3 miles to an intersection with the Momnument Butte gas plant road, turn right and continue 2.4 miles to road intersection; turn left and proceed 1.1 miles to road intersection. Turn left and continue 0.4 mile to proposed access road sign. Follow flags 400 feet to location.

C. Access roads - refer to Maps "A" and "B".

D. Access roads within a one-mile radius - refer to map "B".

E. The existing roads will be maintained in the same or better condition as existed prior to the commencement of operations and said maintenance will continue until final abandonment and reclamation of the well location.

2. Planned Access Roads: Refer to Map "B" (shown in GREEN)

Approximately 400 feet of new road construction will be required for access to the proposed well location.

A. Width - maximum 30-foot overall right-of-way with an 18-foot road running surface, crowned & ditched and/or sloped and dipped.

B. Construction standard - the access road will be constructed so as to conform to the standards outlined in the Bureau of Land Management and Forest Service publication: Surface Operating Standards for Oil and Gas Exploration and Development. (1989)

The road will be constructed to meet the standards of the anticipated traffic flow and all-weather requirements. Construction will include ditching, draining, crowning, and capping or sloping and dipping the roadbed as necessary to provide a well constructed and safe road. Prior to construction/upgrading, the roadway shall be cleared of any snow cover and allowed to dry completely. Traveling off of the thirty (30) foot right-of-way will not be allowed.

Road drainage crossings shall be of the typical dry creek drainage crossing type. Crossing shall be designed so they will not cause siltation or the accumulation of debris in the drainage crossing nor shall the drainages be blocked by the roadbed. Erosion of drainage ditches by runoff water shall be prevented by diverting water off at frequent intervals by means of cutouts.

Upgrading shall not be allowed during muddy conditions.

Should mud holes develop, they shall be filled in and detours around them avoided.

C. Maximum grade - Less than 8%

D. Turnouts - no turnouts will be required on this access road.

E. Drainage design - the access road will be crowned and ditched or sloped and dipped, and water turnouts installed as necessary to provide for proper drainage along the access road route.

F. Culverts, cuts and fills - no culverts will be required. There are no major cuts and/or fills on/along the proposed access road route.

G. Surface materials - all construction materials will be native material taken from onsite.

H. Gates, cattleguards or fence cuts - none required.

I. Road maintenance - during both the drilling and production phase of operations, the road surface and shoulders will be kept in a safe and useable condition and

will be maintained in accordance with the original construction standards. All drainage ditches and culverts will be kept clear and free-flowing, and will also be maintained in accordance with the original construction standards. The access road right-of-way will be kept free of trash during operations.

J. The proposed access road has been centerline flagged.

K. If a right-of-way is required please consider this APD the application for said right-of-way.

3. Location of Existing Wells Within a One-Mile Radius:

Please Refer to Map "C"

A. Water wells - none known.
B. Abandoned wells - see Map "C"
C. Temporarily abandoned wells - none known.
D. Disposal wells - none known.
E. Drilling wells - none known.
F. Producing wells - see Map "C".
G. Shut-in wells - none known.
H. Injection wells - none known.
I. Monitoring wells - none known.

4. Location of Existing and/or Proposed Facilities Owned by Equitable Resources Energy Company Within a One-Mile Radius:

A. Existing

1. Tank batteries - see Map "C".
2. Production facilities - see Map "C".
3. Oil gathering lines - none.
4. Gas gathering lines - see Map "C".

B. New Facilities Contemplated

1. All production facilities will be located on the disturbed portion of the well pad and at a minimum of twenty-five (25) feet from the toe of the backslope or toe of the fill slope.

2. The production facilities will consist primarily of a pumping unit, Two tanks and an emergency pit. A diagram showing the proposed production facility layout will be submitted to the Authorized Officer via "Sundry Notice" (Form 3160-5) for approval of subsequent installation operations.

3. Production facilities will be accommodated on the

existing well pad. Construction materials required for installation of the production facilities will be obtained from the site; any additional materials required will be purchased from a local supplier having a permitted (private) source of materials within the area.

A dike will be constructed completely around those production facilities which contain fluids (i.e. production tanks, produced water tanks and/or heater treater). These dikes will be constructed of compacted subsoil, be impervious, hold 100% of the capacity of the largest tank, and be independent of the back cut.

4. All permanent (onsite for six months or longer) above the ground structures constructed or installed including pumping units) will be painted Desert Brown. All production facilities will be painted within six (6) months of installation. Facilities required to comply with Occupational Health and Safety Act Rules and Regulations will be excluded from this painting requirement.

C. The production (emergency) pit will be 12'x12' and will be fenced. Said fence will be maintained in good condition.

D. During drilling and subsequent operations, all equipment and vehicles will be confined to the access road right-of-way and any additional areas as specified in the approved Application for Permit to Drill.

E. Reclamation of disturbed areas no longer needed for operation will accomplished by grading, leveling and seeding as recommended by the Bureau of Land Management.

For Pipeline:

F. Any proposed pipelines will be submitted to the authorized officer Via Sundry Notice for approval of subsequent operations.

G. Equitable Resources Energy Company shall be responsible for road maintenance from the beginning to completion of operations.

5. Location and Type of Water Supply

A. Water to be used for the drilling of these wells will be

hauled by truck over the roads described in item #1 and item #2, from a well owned by Owen Dale Anderson of Vernal Utah or from a spring owned by Joe Shields. Source will be determined closer to beginning drilling operations.

B. No water well will be drilled on this location.

6. Source of Construction Materials

A. No construction materials are needed for drilling operations. In the event of production, the small amount of gravel needed for facilities will be hauled in by truck from a local gravel pit over existing access roads to the area. No special access other than for drilling operations and pipeline construction is needed.

B. All access roads crossing Federal land are described under item #2, and shown on Map #A.

All construction material for these location sites and access roads shall be borrowed material accumulated during the construction of the location sites and access roads. No additional construction material from other sources is anticipated at this time, if in the future it is required the appropriate actions will be taken to acquire it from private sources.

C. All surface disturbance area is on B.L.M. lands.

D. There are no trees on this location.

7. Methods of Handling Waste Materials:

A. Cuttings - the cuttings will be deposited in the reserve pit.

B. Drilling fluids - including salts and chemicals will be contained in the reserve pit. Upon termination of drilling and completion operations, the liquid contents of the reserve pit will be removed and disposed of at an approved waste disposal facility within ninety (90) days after termination of drilling and completion activities.

In the event adverse weather conditions prevent removal of the fluids from the reserve pit within this time period, an extension may be granted by the Authorized Officer upon receipt of a written request from Equitable Resources Energy Company.

The reserve pit will be constructed so as not to leak, break, or allow discharge. The reserve pit will be lined with a 12 mil plastic reinforced liner.

C. Produced fluids - liquid hydrocarbons produced during completion operations will be placed in test tanks on the location. Produced waste water will be confined to a lined pit (reserve pit) or storage tank for a period not to exceed ninety (90) days after initial production. During the ninety (90) day period, in accordance with NTL-2B, an application for approval of a permanent disposal method and location, along with the required water analysis, shall be submitted for the Authorized Officer's approval. Failure to file an application within the time frame allowed will be considered an incidence of noncompliance.

Any spills of oil, gas, salt water or other noxious fluids will be immediately cleaned up and removed to an approved disposal site.

D. Sewage - self-contained, chemical toilets will be provided for human waste disposal. Upon completion of operations, or as needed, the toilet holding tanks will be pumped and the contents thereof disposed of in the nearest, approved, sewage disposal facility.

E. Garbage and other waste material - garbage, trash and other waste materials will be collected in a portable, self-contained and fully-enclosed trash cage during drilling and completion operations. Upon completion of operations (or as needed) the accumulated trash will be disposed of at an authorized sanitary landfill. No trash will be burned on location or placed in the reserve pit.

F. Immediately after removal of the drilling rig, all debris and other waste materials not contained in the trash cage will be cleaned up and removed from the well location. No adverse materials will be left on the location. Any open pits will be fenced during the drilling operation and the fencing will be maintained until such time as the pits are backfilled.

G. The reserve and/or production pit will be constructed on the existing location and will not be located in natural drainages where a flood hazard exists or surface runoff will destroy or damage the pit walls. All pits will be constructed so as not to leak, break, or allow the discharge of liquids therefrom.

8. Ancillary Facilities:

None anticipated.

9. Wellsite Layout:

A. Plat #1 shows the drill site layout as staked. Cross sections have been drafted to visualize the planned cuts and fills across the location. An average minimum of six (6) inches of topsoil will be stripped from the location (including areas of cut, fill, and/or subsoil storage) and stockpiled for future reclamation of the well site. Refer to Figure #1 for the location of the topsoil and subsoil stockpiles. Corner #2 will be rounded to avoid rock outcropping.

B. Plat #2 is a diagram showing the rig layout. No permanent living facilities are planned. There will be three (3) trailers on location during drilling operation.

C. A diagram showing the proposed production facility layout will be submitted to the Authorized Officer via Sundry Notice (Form 3160-5) for approval of subsequent operations.

D. The reserve pit will be constructed so as to be capable of holding 12,000 bbls. of fluid. The flare pit will be located downwind of the prevailing wind between corner #5 and corner #6. Access will be from the South near corner #7.

The reserve pit will be lined with a 12 mil plastic liner, it will be torn and perforated after the pit dries and before backfilling of the reserve pit.

E. Prior to the commencement of drilling operations, the reserve pit will be fenced on three (3) sides using 39-inch net wire with one strand of barbed wire on top of the net wire. The net wire will be no more than two inches above the ground. the barbed wire will be three inches above the net wire. total height of the fence will be at least 42-inches.

1. Corner posts shall be cemented and/or braced in such a manner to keep the fence tight at all times.

2. Standard steel, wood, or pipe posts shall be used between the corner braces. The maximum distance between any two (2) posts shall be no greater than sixteen (16) feet.

3. All wire shall be stretched, by using a stretching device, before it is attached to the corner posts.

The fourth side of the reserve pit will be fenced immediately upon removal of the drilling rig and the

fencing will be maintained until the pit is backfilled.

F. Any hydrocarbons on the pit will be removed from the pit as soon as possible after drilling operations are completed.

10. Plans for Reclamation of the Surface:

The B.L.M. will be contacted prior to commencement of any reclamation operations.

A. Production

1. Immediately upon well completion, the well location and surrounding area(s) will be cleared of all debris, materials, trash and junk not required for production.

2. Immediately upon well completion, any hydrocarbons on the pit shall be removed in accordance with 43 CFR 3162.7-1.

3. The plastic pit liner shall be torn and perforated before backfilling of the reserve pit.

4. Before any dirt work to restore the location takes place, the reserve pit will be completely dry and all cans, barrels, pipe, etc. will be removed.

   Other waste and spoil materials will be disposed of immediately upon completion of drilling and workover activities.

5. The reserve pit and that portion of the location and access road not needed for production facilities/operations will be reclaimed within one hundred twenty (120) days from the date of well completion, weather permitting.

6. If the well is a producer, Equitable Resources Energy Company will, upgrade and maintain access roads as necessary to prevent soil erosion, and accommodate year round traffic. Reshape areas unnecessary to operations, distribute topsoil, disk and seed all disturbed areas outside the work area according to the recommended seed mixture. Perennial vegetation must be established. Additional work shall be required in case of seeding failures, etc.

   If the well is abandoned/dry hole, Equitable Resources Energy Company will, restore the access road and location to approximately the original contours.

During reclamation of the site, push the fill material into cuts and up over the backslope. Leave no depressions that will trap water or form ponds. Distribute topsoil evenly over the location, and seed according to the above seed mixture. The access road and location shall be ripped or dished prior to seeding. Perennial vegetation must be established. Additional work shall be required in case of seeding failures, etc.

Seedbed will be prepared by disking, then roller packing following the natural contours. Seed will be drilled on contours at a depth no greater than one-half inch (1/2"). In areas that cannot be drilled, seed will be broadcast at double the seeding rate and harrowed into soil. Certified seed will be used whenever available.

Fall seeding will be completed after September 1 and prior to prolonged ground frost. Spring seeding, to be effective, will be completed after the frost has left the ground and prior to May 15th.

7. Upon completion of backfilling, leveling and recontouring, the stockpiled topsoil will be evenly spread over the reclaimed area(s). Prior to reseeding, all disturbed surfaces will be scarified and left with a rough surface. No depressions will be left that would trap water and form ponds. All disturbed surfaces will be reseeded with the seed mixture stipulated by the B.L.M.

   Seed will be drilled on the contour to a approximate depth of one-half (1/2) inch. All seeding will be conducted after September 1 and prior to ground frost. Spring seeding will be done after the frost leaves the ground and no later than May 15. If the seeding is unsuccessful, Equitable Resources may be required to make subsequent seedings.

B. Dry Hole/Abandoned Location

1. On lands administered by the Bureau of Land Management, abandoned well sites, roads, or other disturbed areas will be restored to near their original condition. This procedure will include:

   (c) ensuring revegetation of the disturbed areas to the specifications of the Bureau of Land Management at the time of abandonment.

2. All disturbed surfaces will be recontoured to the approximate natural contours and reseeded according to BLM specifications. Reclamation of the well pad and access road will be performed as soon as practical after final abandonment and reseeding operations will be performed in the fall or spring following completion of reclamation operations.

11. Surface Ownership:

The well site and proposed access road are situated on surface lands administered by

Bureau of Land Management
Vernal District Office
Vernal, Utah

12. Other Information:

A. Topographic and geologic features of the area (reference Topographic Map #A) are:

The proposed drill site is located in the Monument Butte oil field, which lies in a large basin formed by the Uinta Mountains to the North and the Bookcliff Mountains to the South. The site is located approximately 15 miles Northwest of the Green River,which is the major drainage for this area, and approximately 13 miles Southwest of Myton Utah.

This basin floor is interlaced with numerous canyons and ridges formed by the non-perennial streams of the area. The sides of these canyons are steep and ledges formed in sandstone, conglomerate deposits and shale are common in this area.

The geologic structures that are visible in the area are of the Uinta formation (Eocene Epoch) tertiary period and the cobblestone and younger alluvial deposits from the Quaternary period.

The soils in the semi-arid area of the Williams Fork Formation (Upper Cretaceous) and Wasatch Formation (Eocene) consist of light brownish gray clay (OL) to sand soil (SM-ML) type with poorly graded gravels.

Outcrops of sandstone ledges, conglomerate deposits and shale are common in this area.

The topsoils in the area range from a sandy clay (SM-ML)

type soil to a clayey (OL) soil.

The majority of the numerous washes and draws in the area are of a non-perennial nature flowing during the early spring run-off and heavy rain storms of long duration which are rare as the normal annual rainfall in the area is only 8".

The flora of the area includes sagebrush, mountain mahogany, serviceberry, rabbit brush, greasewood, four-wing saltbush, Gambel scrub oak, willow, tamarack, shadscale, Spanish bayonet, indian rice grass, cheatgrass, wheatgrass, curly grass, crested wheatgrass, sweet clover, gum weed, foxtail, mustard, Canadian thistle, Russian thistle, Kochia, sunflowers and cacti.

The fauna of the area includes cattle, horses, elk, deer, coyotes, rabbits, rodents, lizards, bull snakes, rattle snakes, water snakes and horned toads. Birds of the area are ground sparrows, bluejays, bluebirds, magpies, ravens, rapters, morning doves, swallows, nighthawks, hummingbirds, and chukar.

B. The surface ownership is Federal. The surface use is grazing and petroleum production.

C. 1. The closest live water is the Green River which is approximately 15 miles Southwest of the proposed site.

2. There are no occupied dwellings in the immediate area

3. An archaeological report will be forwarded upon completion.

4. There are no reported restrictions or reservations noted on the oil and gas lease.

5. A silt catchment dam and basin may be required at the B.L.M.'s discretion.

13. Lessee's or Operator's Representative:

Balcron Oil
a division of Equitable Resources Energy Company
1601 Lewis Avenue
P.O. Box 21017
Billings, Montana 59104
(8:00 a.m. to 5:00 p.m.)
(406)259-7860
FAX: (406)245-1361

Dave McCoskery, Drilling Engineer Home (406)248-3864

Dale Griffin, Home (303)824-3323

14. certification:

I hereby certify that I, or persons under my direct supervision, have inspected the proposed drillsite and access route; that I am familiar with the conditions which presently exist; that any statements made in this plan are, to the best of my knowledge, true and correct; and that the work associated with the operations proposed herein will be performed by Balcron Oil, a division of Equitable Resources Energy Company, and its contractors and subcontractors in conformity with this plan and the terms and conditions under which it is approved. This statement is subject to the provisions of 18 U.S.C. 1001 for the filing of a false statement.

August 30, 1993
Date

Bobbie Schuman
Bobbie Schuman
Coordinator of Enviromental and Regulatory Affairs
BALCRON OIL division of Equitable Resources Energy Company

EXHIBIT "C"

Balcron Oil Well Prognosis

Well Name	BALCRON MONUMENT FEDERAL #24-12-J	**Exploratory**		**Control Well**	C & 0 #4
Location	SESW SEC 12-T9S-R16E 539' FSL, 1777' FWL	**Development**	X	**Operator**	CAMPBELL EXPL
County	DUCHESNE	**Field**	JONAH UNIT	**KB**	5462
State	UTAH	**Section**	SESW 12	**Section**	NESW 12
Total Depth	5700	**Township**	9S	**Township**	9S
GL (Ung)	5495.47 **EST. KB** 5505	**Range**	16E	**Range**	16E

Formation Tops	Prognosis		Sample Top		Control Well	High/Low		
Formation	Depth	Datum	Depth	Datum	Datum	Prog	Cntl	Deviation
UINTA	SURFACE							
GREEN RIVER	1463	4042			3996			
HORSEBENCH SS	2135	3370			3324			
2ND GARDEN GULCH	3785	1720			1674			
Y-3 SAND	4103	1402			1356			
Y-5 SAND	4323	1182			1136			
YELLOW MARKER	4415	1090			1044			
DOUGLAS CREEK	4575	930			884			
R-5 SAND	4745	760			714			
2ND DOUGLAS CREEK	4815	690			644			
GREEN MARKER	4963	542			496			
G-4 SAND	5105	400			354			
CARBONATE MARKER	5437	68			NDE			
B-1 SAND	5486	19			NDE			
TD	5700							

Samples

50' FORM 1400' TO 3850'
10' FROM 3850' TO TD

Logs

DLL FROM SURF CSG TO TD
LDT/CNL FROM 3600' TO TD

DST,s

DST #1 NONE
DST #2
DST #3
DST #4

Cores

Core #1 NONE
Core #2
Core #3
Core #4

Wellsite Geologist

Name:
From: to:
Address:
Phone # wk.
hm.
Fax #

Mud Logger/Hot Wire

Company:
Required: (Yes/No) YES
Type: TWO MAN
Logger:
Phone #
Fax #

Comments:

Report To: 1st Name: STEVE VANDELINDER Phone # (406) 259-7860 wk. 248-2778 hm.
2nd Name: KEVEN REINSCHMIDT Phone # " wk. 248-7026 hm.
Prepared By: KKR 8/22/93 Phone # wk. hm.

SEP 1 1993

Equitable Resources Energy Company
Balcron Oil Division

DRILLING PROGRAM

WELL NAME: Monument Butte Area
PROSPECT/FIELD: Monument Butte
LOCATION: Twn.9S Rge.16E & 17E
COUNTY: Duchesne
STATE: Utah

TOTAL DEPTH: SEE APD COVER SHEET

HOLE SIZE	INTERVAL
12 1/4"	0 to 260'
7 7/8"	260 to T.D.

CASING	INTERVAL		CASING		
STRING TYPE	FROM	TO	SIZE	WEIGHT	GRADE
Surface Casing	0	260	8 5/8"	24 #/Ft	J-55
Production Casing	0	T.D.	5 1/2"	15.50#/Ft	J-55

(All Casing will be new, ST&C)

CEMENT PROGRAM

Surface	150 sacks 75% Class "G" 25% Poz with 2% CaCl and 1/4 #/Sk Flocele. (Cement will be circulated to surface.)
Production	250 sacks Thifty Lite and 400 sacks 50-50 Poz mix.

PRELIMINARY DRILLING FLUID PROGRAM

TYPE	FROM	TO	WEIGHT	PLAS. VIS	YIELD POINT
Air and air mist	0	260	N.A.	N.A.	N.A.
Air/Air Mist/KCl Water	260	T.D.	8.7-8.9	N.A.	N.A.

depending on the drilling contractor either:
a.) Drilling will be with air from surface to as deep as hole conditions allow. 2% KCl fluid will be used for the remainder of the hole.
b.) Drilling will be done using 2% KCl water and gel.

COMMENTS

1.) No cores or DST's are planned.

SEP 1 1993

DMM/8/27/93

BALCRON OIL CO.

Operator: BALCRON OIL	Well Name: MONUMENT BUTTE AREA
Project ID:	Location: Monument Butte, Utah

Design Parameters:

Mud weight (9.63 ppg)	: 0.500	psi/ft
Shut in surface pressure	: 2280	psi
Internal gradient (burst)	: 0.100	psi/ft
Annular gradient (burst)	: 0.000	psi/ft

Tensile load is determined using air weight
Service rating is "Sweet"

Design Factors:

Collapse	: 1.125	
Burst	: 1.00	
8 Round	: 1.80	(J)
Buttress	: 1.60	(J)
Body Yield	: 1.50	(B)
Overpull	: 0	lbs.

	Length (feet)	Size (in.)	Weight (lb/ft)	Grade	Joint	Depth (feet)	Drift (in.)	Cost
1	SFC TO TD	5-1/2"	15.50	J-55	ST&C	SEE APD COVER SHEET	4.825	

	Collapse Load (psi)	Collapse Strgth (psi)	Collapse S.F.	Burst Load (psi)	Min Int Yield Strgth (psi)	Burst S.F.	Tension Load (kips)	Tension Strgth (kips)	Tension S.F.
1	2850	4040	1.418	2850	4810	1.69	88.35	202	2.29 J

Prepared by : McCoskery, Billings, MT
Date : 11-30-1992 (Revised 8/30/93)
Remarks :

The mud gradient and bottom hole pressures (for burst) are 0.500 psi/ft and 2,850 psi, respectively.

NOTE: The design factors used in this casing string design are as shown above. As a general guideline, Lone Star Steel recommends using minimum design factors of 1.125 - Collapse (with evacuated casing), 1.0 - Burst, 1.8 - 8 Round Tension, 1.6 - Buttress Tension, and 1.5 - Body Yield. Collapse strength under axial tension was calculated based on the Westcott, Dunlop and Kemler curve. Engineering responsibility for use of this design will be that of the purchaser. Costs for this design are based on a 1990 pricing model. (Version 1.0G)

United States Department of the Interior

BUREAU OF LAND MANAGEMENT
MONTANA STATE OFFICE
222 NORTH 32ND STREET
P.O. BOX 36800
BILLINGS, MONTANA 59107-0800

TAKE PRIDE IN AMERICA

IN REPLY TO:

MTM 12619-A et al
BLM BOND NO. MT0576
(922.31)

April 25, 1989

N O T I C E

Equitable Resources Energy Company
P. O. Box 21017
Billings, Montana 59104

OIL AND GAS

CORPORATE MERGER RECOGNIZED
RIDER TO NATIONWIDE BOND ACCEPTED

Acceptable evidence has been filed in this office concerning the merger of Balcron Oil Company into Equitable Resources Energy Company, the surviving corporation. Information provided shows that Balcron Oil Company merged into Equitable Resources Energy Company, changing the former entity's name to Balcron Oil, a Division of Equitable Resources Energy Company. Please note that Divisions cannot hold leases, therefore, after consultation with Balcron Oil, this office is recognizing only the merger action.

A rider was filed on April 20, 1989, to be made a part of $150,000 Nationwide Oil and Gas Bond No. 5547188 (BLM Bond No. MT0576) with Balcron Oil Company as principal and Safeco Insurance Company of America as surety. By means of this rider, the surety consents to changing the name on the bond from Balcron Oil Company to Equitable Resources Energy Company. The rider is accepted effective April 20, 1989.

For our purposes, the merger is recognized effective April 20, 1989.

The oil and gas lease files and communitization agreement files identified on the enclosed Exhibit A have been noted as to the merger. Other lease interests will be transferred by assignments from Ballard & Cronoble to Equitable Resources Energy Company.

Cynthia L. Embretson, Chief
Fluids Adjudication Section

1 Enclosure
1-Exhibit A

cc: (w/encl.)
AFS, Denver (1)
All DMs (1 ea.)
RMO Section (1)
Regional Forester, Lakewood (2)
Regional Forester, Missoula (2)
Bureau of Reclamation (1)

SEP 1 1993

BOND NO. 5547188

Form 3104-8
(July 1984)

UNITED STATES
DEPARTMENT OF THE INTERIOR
BUREAU OF LAND MANAGEMENT

STATE, NATIONWIDE, OR NATIONAL PETROLEUM RESERVE IN ALASKA OIL AND GAS BOND

Act of February 25, 1920 (30 U.S.C. Sec. 181)
Act of August 7, 1947 (30 U.S.C. Sec. 351)
Department of the Interior Appropriations Act, Fiscal Year 1981 (P.L. 96-514)
Other Oil and Gas Leasing Authorities as Applicable

KNOW ALL MEN BY THESE PRESENTS, That we
BALCRON OIL COMPANY
of 1601 Lewis Avenue, Billings, MT 59104

as principal, and
SAFECO INSURANCE COMPANY OF AMERICA
of 111 Presidential Blvd., Suite 231, Bala Cynwyd, PA 19004

as surety, are held and firmly bound unto the United States of America in the sum of ONE HUNDRED FIFTY THOUSAND AND 00/100---------- dollars ($ 150,000.00), in lawful money of the United States, which sum may be increased or decreased by a rider hereto executed in the same manner as this bond, for the use and benefit of (1) the United States; (2) the owner of any of the land subject to the coverage of this bond, who has a statutory right to compensation in connection with a reservation of the oil and gas deposits to the United States; and (3) any lessee or permittee under a lease or permit issued by the United States prior to the issuance of an oil and gas lease for the same land subject to this bond, covering the use of the surface or the prospecting for, or development of, other mineral deposits in any portion of such land, to be paid to the United States. For such payment, well and truly to be made, we bind ourselves, and each of our heirs, executors, administrators, and successors, jointly and severally.

☐ The coverage of this bond shall extend to all of the principal's holdings of federal oil and gas leases in the United States, including Alaska, issued or acquired under the Acts cited in Schedule A.

☐ The coverage of this bond extends only to the principal's holdings of federal oil and gas leases issued or acquired under the Acts cited and in the States named in Schedule A and to any other State or States that may be named in a rider attached hereto by the lessor with the consent of the surety.

☐ The coverage of this bond extends only to the principal's holdings of federal oil and gas leases within the National Petroleum Reserve in Alaska.

SCHEDULE A

Mineral Leasing Act of February 25, 1920 (30 U.S.C. Sec. 181), Acquired Lands Leasing Act of August 7, 1947 (30 U.S.C. Sec. 351), and other oil and gas leasing authorities as applicable.

NAMES OF STATES

ALL STATES

SEP 1 1993

The conditions of the foregoing obligations are such that, whereas the said principal has an interest in oil and gas leases issued under the Acts cited in this bond: (1) as lessee; (2) as the approved holder of operating rights in all or part of the lands covered by such leases under operating agreements with the lessees; or (3) as designated operator or agent under such leases pending approval of an assignment or operating agreement; and

WHEREAS the principal is authorized to drill for, mine, extract, remove, and dispose of oil and gas deposits in or under the lands covered by the leases, operating agreements or designations and is obligated to comply with certain covenants and agreements set forth in such instruments; and

WHEREAS the principal and surety agree that without notice to the surety the coverage of this bond, in addition to the present holdings of the principal, shall extend to and include:

SAFECO

SURETY RIDER

SAFECO INSURANCE COMPANY OF AMERICA
GENERAL INSURANCE COMPANY OF AMERICA
FIRST NATIONAL INSURANCE COMPANY OF AMERICA
HOME OFFICE: SAFECO PLAZA
SEATTLE, WASHINGTON 98185

To be attached to and form a part of

Type of Bond: Nationwide Oil and Gas Lease Bond

Bond No. 5547188 (BLM Bond No. MT0576)

dated effective 9/8/88
(MONTH, DAY, YEAR)

executed by BALCRON OIL COMPANY, as Principal,
(PRINCIPAL)

and by SAFECO INSURANCE COMPANY OF AMERICA, as Surety,
(SURETY)

in favor of UNITED STATES DEPARTMENT OF THE INTERIOR, BUREAU OF LAND MANAGEMENT.
(OBLIGEE)

In consideration of the mutual agreements herein contained the Principal and the Surety hereby consent to changing

The name of the Principal

From: BALCRON OIL COMPANY

To: EQUITABLE RESOURCES ENERGY COMPANY

Nothing herein contained shall vary, alter or extend any provision or condition of this bond except as herein expressly stated.

This rider is effective 1/1/89
(MONTH, DAY, YEAR)

Signed and Sealed 4/10/89
(MONTH, DAY, YEAR)

EQUITABLE RESOURCES ENERGY COMPANY
PRINCIPAL

By: _____
TITLE

SAFECO INSURANCE COMPANY OF AMERICA
SURETY

By: R. George Voinchet
ATTORNEY-IN-FACT

SEP 1 1993

SAFECO

POWER OF ATTORNEY

GENERAL INSURANCE COMPANY OF AMERICA
HOME OFFICE: SAFECO PLAZA
SEATTLE, WASHINGTON 98185

EXHIBIT "E" Page 4 of 4

No. 3798

KNOW ALL BY THESE PRESENTS:

That SAFECO INSURANCE COMPANY OF AMERICA and GENERAL INSURANCE COMPANY OF AMERICA, each a Washington corporation, does each hereby appoint

----------THOMAS L. VEHAR; R. GEORGE VOINCHET, Pittsburgh, Pennsylvania----------

its true and lawful attorney(s)-in-fact, with full authority to execute on its behalf fidelity and surety bonds or undertakings and other documents of a similar character issued in the course of its business, and to bind the respective company thereby.

IN WITNESS WHEREOF, SAFECO INSURANCE COMPANY OF AMERICA and GENERAL INSURANCE COMPANY OF AMERICA have each executed and attested these presents

this 4th day of September, 19 87.

CERTIFICATE

Extract from the By-Laws of SAFECO INSURANCE COMPANY OF AMERICA and of GENERAL INSURANCE COMPANY OF AMERICA:

"Article V, Section 13. — FIDELITY AND SURETY BONDS . . . the President, any Vice President, the Secretary, and any Assistant Vice President appointed for that purpose by the officer in charge of surety operations, shall each have authority to appoint individuals as attorneys-in-fact or under other appropriate titles with authority to execute on behalf of the company fidelity and surety bonds and other documents of similar character issued by the company in the course of its business . . . On any instrument making or evidencing such appointment, the signatures may be affixed by facsimile. On any instrument conferring such authority or on any bond or undertaking of the company, the seal, or a facsimile thereof, may be impressed or affixed or in any other manner reproduced; provided, however, that the seal shall not be necessary to the validity of any such instrument or undertaking."

Extract from a Resolution of the Board of Directors of SAFECO INSURANCE COMPANY OF AMERICA and of GENERAL INSURANCE COMPANY OF AMERICA adopted July 28, 1970.

"On any certificate executed by the Secretary or an assistant secretary of the Company setting out,

(i) The provisions of Article V, Section 13 of the By-Laws, and

(ii) A copy of the power-of-attorney appointment, executed pursuant thereto, and

(iii) Certifying that said power-of-attorney appointment is in full force and effect,

the signature of the certifying officer may be by facsimile, and the seal of the Company may be a facsimile thereof."

I, Boh A. Dickey, Secretary of SAFECO INSURANCE COMPANY OF AMERICA and of GENERAL INSURANCE COMPANY OF AMERICA, do hereby certify that the foregoing extracts of the By-Laws and of a Resolution of the Board of Directors of these corporations, and of a Power of Attorney issued pursuant thereto, are true and correct, and that both the By-Laws, the Resolution and the Power of Attorney are still in full force and effect.

IN WITNESS WHEREOF, I have hereunto set my hand and affixed the facsimile seal of said corporation

this 10th day of April, 19 89.

SEP 1 1993

S-974 R10 3/86

PRINTED IN U.S.A.

EXHIBIT "L"

EQUITABLE RESOURCES ENERGY CO.

BALCRON MONUMENT FEDERAL #24-12J

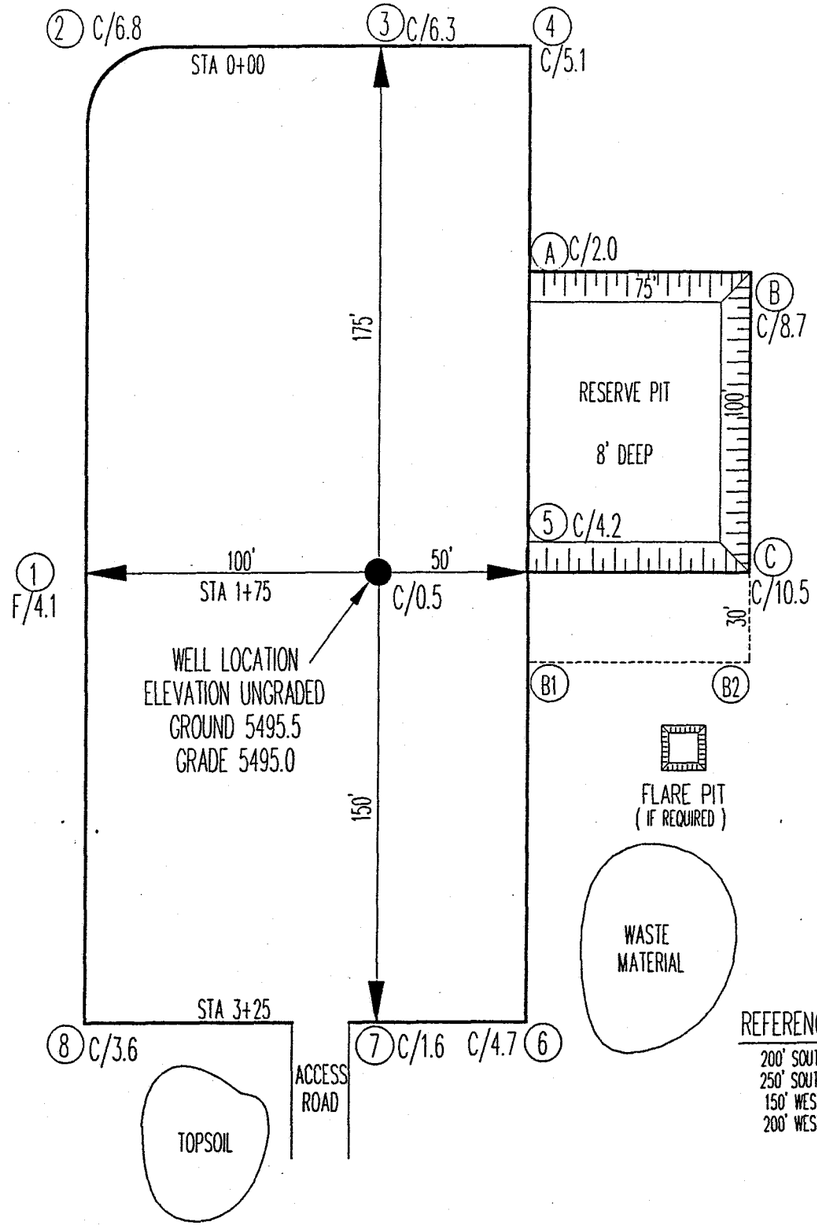

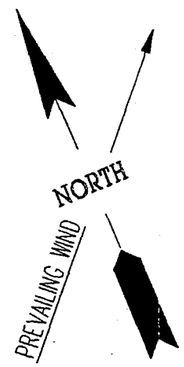

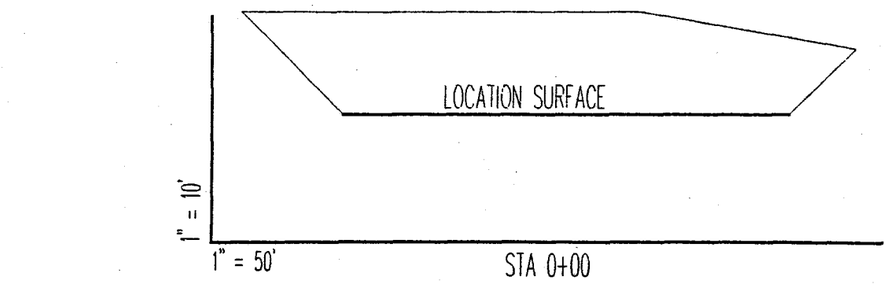

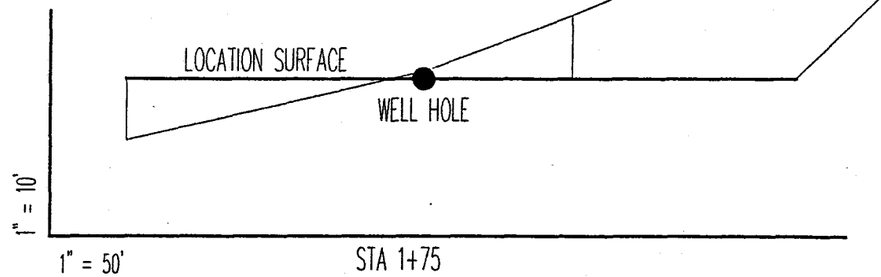

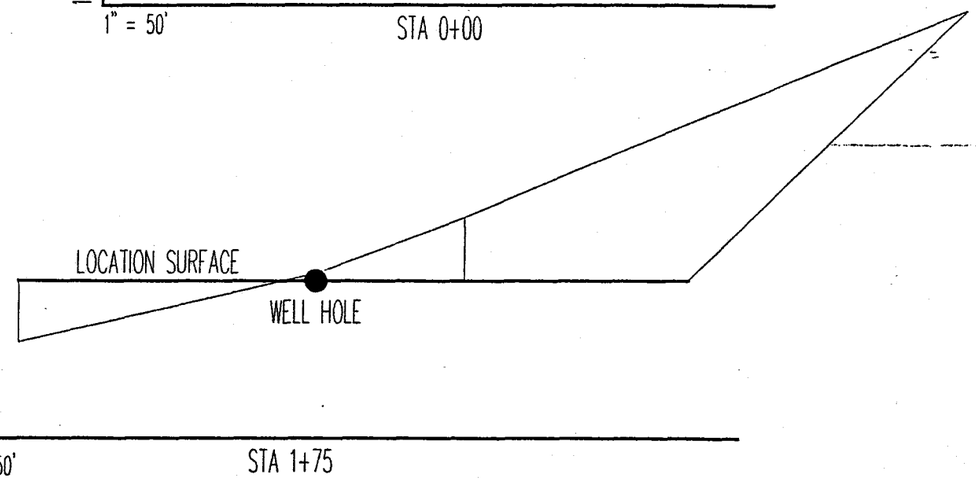

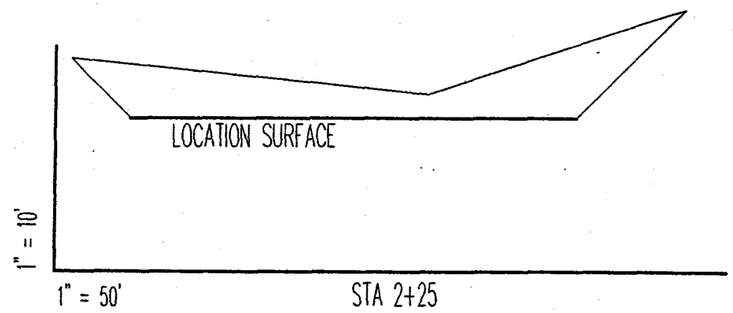

REFERENCE POINTS

200' SOUTH 5500.1'
250' SOUTH 5502.0'
150' WEST 5489.1'
200' WEST 5489.2'

APPROXIMATE YARDAGE

CUT = 3834 Cu Yds
FILL = 1065 Cu Yds
PIT = 2222 Cu Yds
NOTE: CUT & FILL CANNOT BE BALANCED WITHOUT PUTTING RIG ON FILL

TRI-STATE
LAND SURVEYING. INC.
38 WEST 100 NORTH, VERNAL, UTAH 84078
801-781-2501

WORKSHEET
APPLICATION FOR PERMIT TO DRILL

DATE RECEIVED: 09/01/93

OPERATOR: EQUITABLE RESOURCES OPERATOR ACCT NO: N- 9890
WELL NAME: BALCRON MONUMENT FED. 24-12J

API NO. ASSIGNED: 43 - 013 - 31409

CONFIDENTIAL

LEASE TYPE: FED LEASE NO: U-035521-A
LOCATION: SESW 12 - T09S - R16E DUCHESNE COUNTY
FIELD: MONUMENT BUTTE 105 FIELD CODE: 105

RECEIVED AND/OR REVIEWED:

Y Plat
Y Bond $80,000 SURETY
(Number 5578314 SAFECO)
N Potash (Y/N)
N Oil shale (Y/N)
___ Water permit
(Number _____)
N RDCC Review (Y/N)
(Date: _____)

LOCATION AND SITING:

✓ R649-2-3. Unit: JONAH UNIT
___ R649-3-2. General.
___ R649-3-3. Exception.
___ Drilling Unit.
Board Cause no: _____
Date: _____

COMMENTS: WATER SUPPLY TO BE NOTICED BY SUNDRY PRIOR TO SPUD

STIPULATIONS: _____

~~CONFIDENTIAL~~ PERIOD EXPIRED ON 1-30-95

cc: Duchesne County Assessor
Bureau of Land Management, Vernal
Jim Thompson, Field Inspection Supvr.

EQUITABLE RESOURCES
ENERGY COMPANY
BALCRON OIL DIVISION

1601 Lewis Avenue
P.O. Box 21017
Billings, MT 59104

Office: (406) 259-7860
FAX: (406) 245-1365
FAX: (406) 245-1361

September 2, 1993

Bureau of Land Management
170 South 500 East
Vernal, UT 84078

Gentlemen:

Enclosed are archeology reports which are to be added as part of our Applications for Permit to Drill the wells on the attached list.

Sincerely,

Bobbie Schuman

Bobbie Schuman
Coordinator of Operations,
Environmental and Regulatory Affairs

/rs

Enclosures

cc: Utah Division of Oil, Gas and Mining

ARCHEOLOGICAL - ENVIRONMENTAL RESEARCH CORPORATION

P. O. Box 853 Bountiful, Utah 84011-0853
Tel: (801) 292-7061, 292-9668

August 27, 1993

Subject: **CULTURAL RESOURCE EVALUATION OF SEVEN PROPOSED WELL LOCATIONS IN THE MONUMENT BUTTES LOCALITY OF DUCHESNE COUNTY, UTAH**

Project: Balcron Oil -- 1993 Development

Project No.: BLCR-93-4

Permit No.: Dept. of Interior -- UT-93-54937

State Project No: UT-93-AF-446b

To: Ms. Bobbi Schuman, Balcron Oil Division, P.O. Box 21017, Billings, Montana 59104

Mr. David Little, District Manager, Bureau of Land Management, 170 South 500 East, Vernal, Utah 84078

Info: Antiquities Section, Division of State History, 300 Rio Grande, Salt Lake City, Utah 84101

CULTURAL RESOURCE EVALUATION OF SEVEN PROPOSED WELL LOCATIONS IN THE MONUMENT BUTTES LOCALITY OF DUCHESNE COUNTY, UTAH

Report Prepared for Balcron Oil Company

Dept. of Interior Permit No.: UT-93-54937
AERC Project 1395 (BLCR-93-4)

Utah State Project No.: UT-93-AF-446b

Principal Investigator
F. Richard Hauck, Ph.D.

Author of the Report
Glade V Hadden

ARCHEOLOGICAL-ENVIRONMENTAL RESEARCH CORPORATION (AERC)

181 North 200 West, Suite 5
P.O. Box 853
Bountiful, Utah 84011-0853

August 27, 1993

ABSTRACT

An intensive cultural resource evaluation has been conducted for Balcron Oil Company of seven proposed well locations situated on BLM administered lands located in the Monument Buttes locality of Duchesne County, Utah. This evaluation involved a total of 79.86 acres, of which 9.86 acres (.8 miles) include five separate access roads associated with units MF 42-1, MF 21-12, 14-12J, 24-12J and 24-4Y. The remaining 70 acres involve 10 acre parcels at all seven of the proposed well locations. These evaluations were conducted by Glade Hadden of AERC on August 25 and 26, 1993.

No previously recorded significant or National Register eligible cultural resources will be adversely affected by the proposed developments.

No newly identified cultural resource activity loci were discovered during the examinations.

AERC recommends project clearance based on adherence to the stipulations noted in the final section of this report.

TABLE OF CONTENTS

LIST OF MAPS OF THE PROJECT AREA

GENERAL INFORMATION

On August 25 and 26, 1993, AERC archaeologist Glade Hadden conducted an intensive cultural resource evaluation for Balcron Oil Company of Billings, Montana. This examination involved seven proposed well locations and associated access routes located in the Monument Buttes area south of Myton, Utah. Some .8 miles of access routes (9.86 acres) and seven - 10 acre well pads were examined. This project is situated in the Monument Buttes locality of Duchesne County, Utah. The entire project area is situated on federal lands administered by the Bureau of Land Management, Vernal District Office, Diamond Mountain Resource Area.

The purpose of the field study and this report is to identify and document cultural site presence and assess National Register potential significance relative to established criteria (cf., Title 36 CFR 60.6). The proposed developments on these well locations require archaeological evaluations in compliance with U.C.A. 9-8-404, the Federal Antiquities Act of 1906, the Reservoir Salvage Act of 1960-as amended by P.L. 93-291, Section 106 of the National Historic Preservation Act of 1966-as amended, the National Environmental Policy Act of 1969, the Federal Land Policy and Management Act of 1979, the Archaeological Resources Protection Act of 1979, the Native American Religious Freedom Act of 1978, the Historic Preservation Act of 1980, and Executive Order 11593.

In addition to documenting cultural identity and significance, mitigation recommendations relative to the preservation of cultural data and materials can be directed to the Bureau of Land Management Vernal District Office, and to the Utah State Antiquities Section. This work was done under U.S. Department of Interior Permit for Utah UT-93-54937 which expires on January 31, 1994.

Project Location

The project location is in the Monument Buttes locality of Duchesne County, Utah. It is situated on the Myton SE and Myton SW 7.5 minute topographic quads.

Unit 24-4Y is situated in the SE - SW quarter of Section 4, Township 9 South, Range 16 East. Its access route extends ca. .25 mi. north from an existing well location (Balcron Unit 21-9Y) (See Map 1).

Unit 12-12J is in the SW - NW quarter of Section 12, Township 9 South, Range 16 East. This unit is accessible via an existing road which extends westerly from the main Monument Buttes road (See Map 2). The well location is directly adjacent this road, so no separate access route is necessary.

AERC

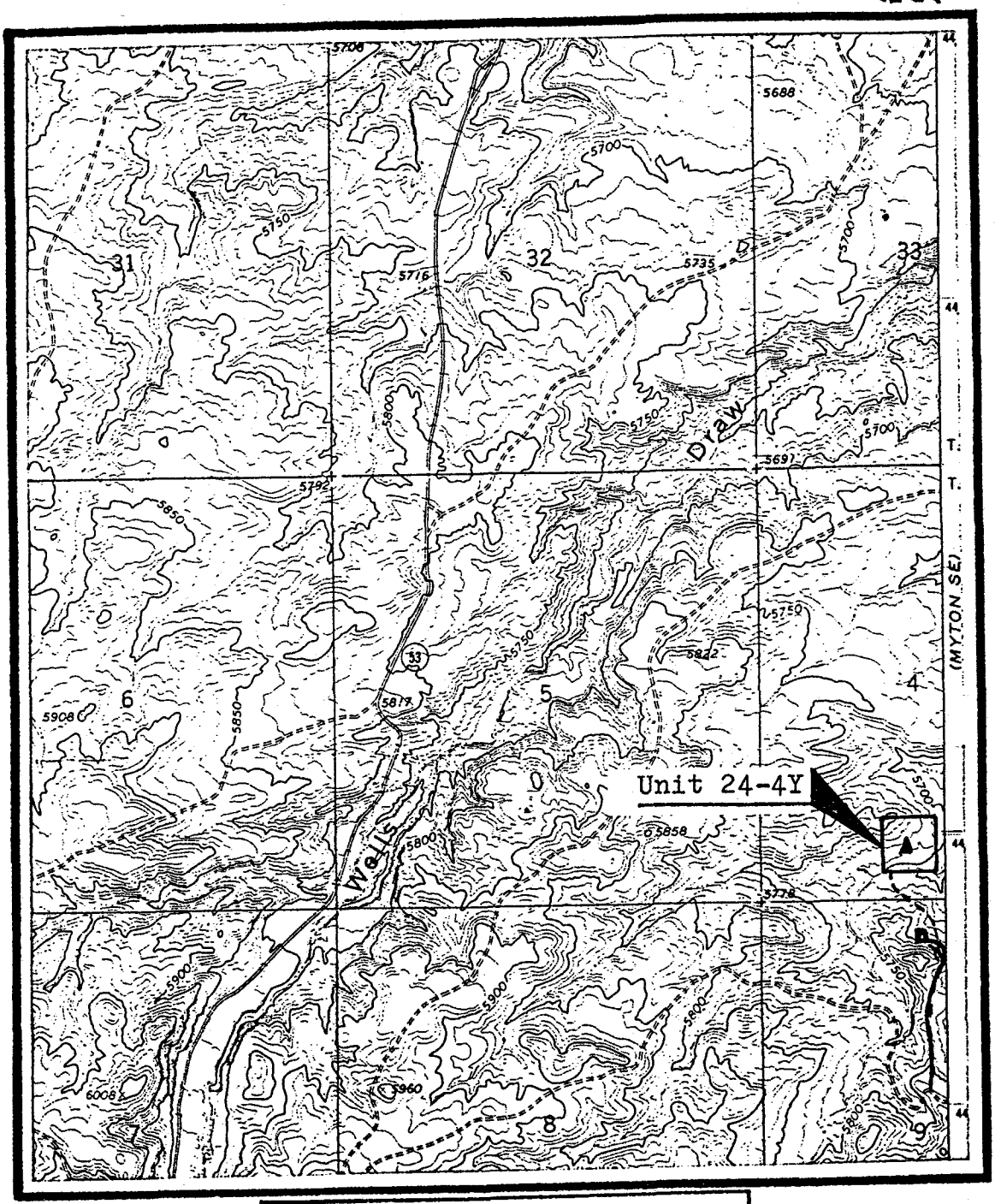

T. 9 South
R. 16 East
Meridian: SL
Quad: Myton SW
Utah

MAP 1
Cultural Resource Inventory of Proposed Well Unit 24-4Y in the Monument Buttes Locality, Duchesne C.

Legend:
Well Center Stake
10 Acre Well Pad
Access Route
Existing Road

N

Project: BLCR-93-4
Series: Uinta Basin
Date: 8/30/93

Scale: 1:24,000

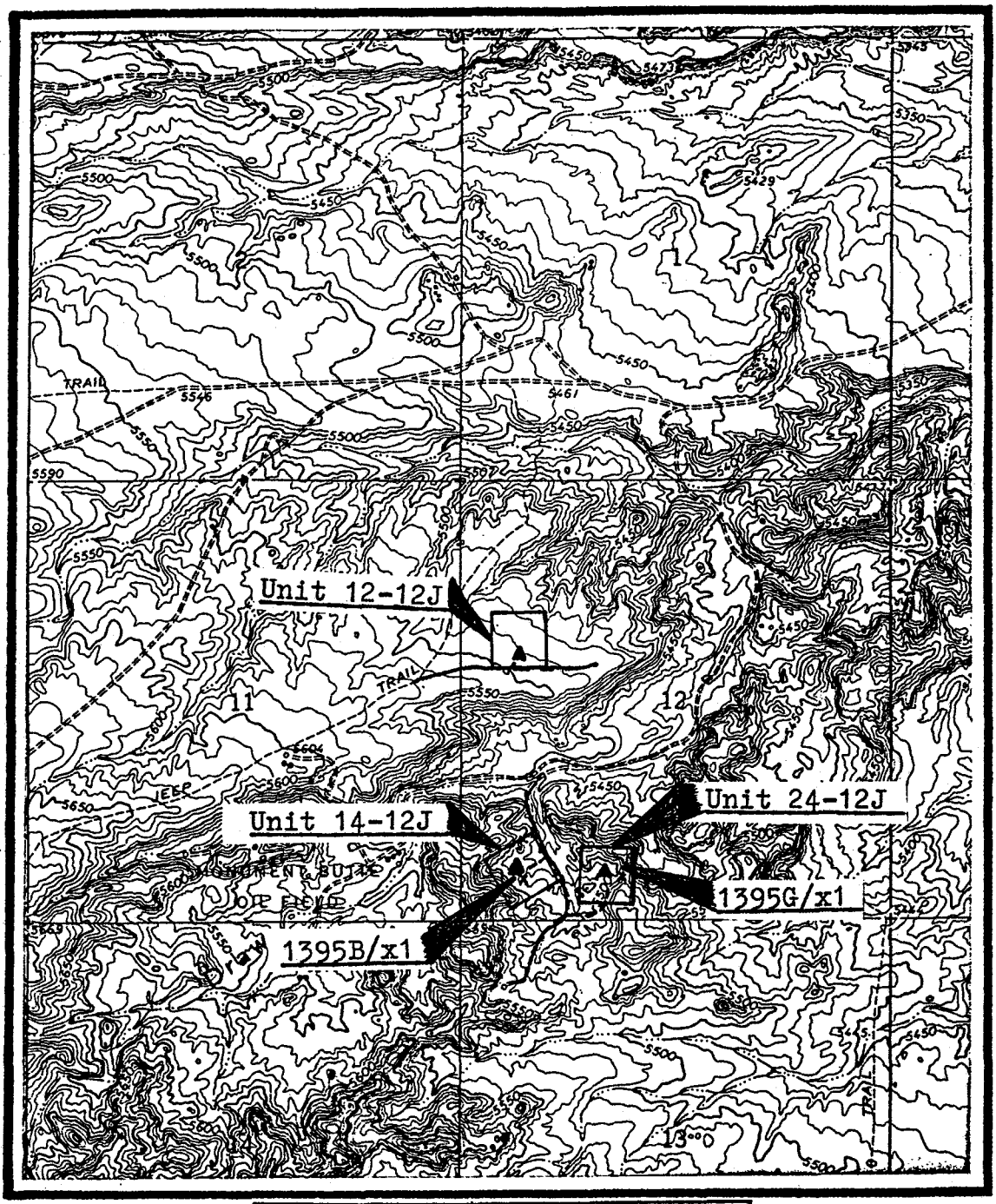

T. 9 South
R. 16 East
Meridian: SL
Quad: Myton SE
Utah

MAP 2
Cultural Resource Inventory
of Proposed Well Units
12-12J, 14-12J and 24-12J
Monument Buttes Locality

Legend:
Well Center Stake ▲
10 Acre Well Pad □
Access Route
Existing Road
Isolated Artifact X

N

Project: BLCR-93-4
Scale: 1:24,000
Series: Uinta Basin
Date: 8/30/93

AERC

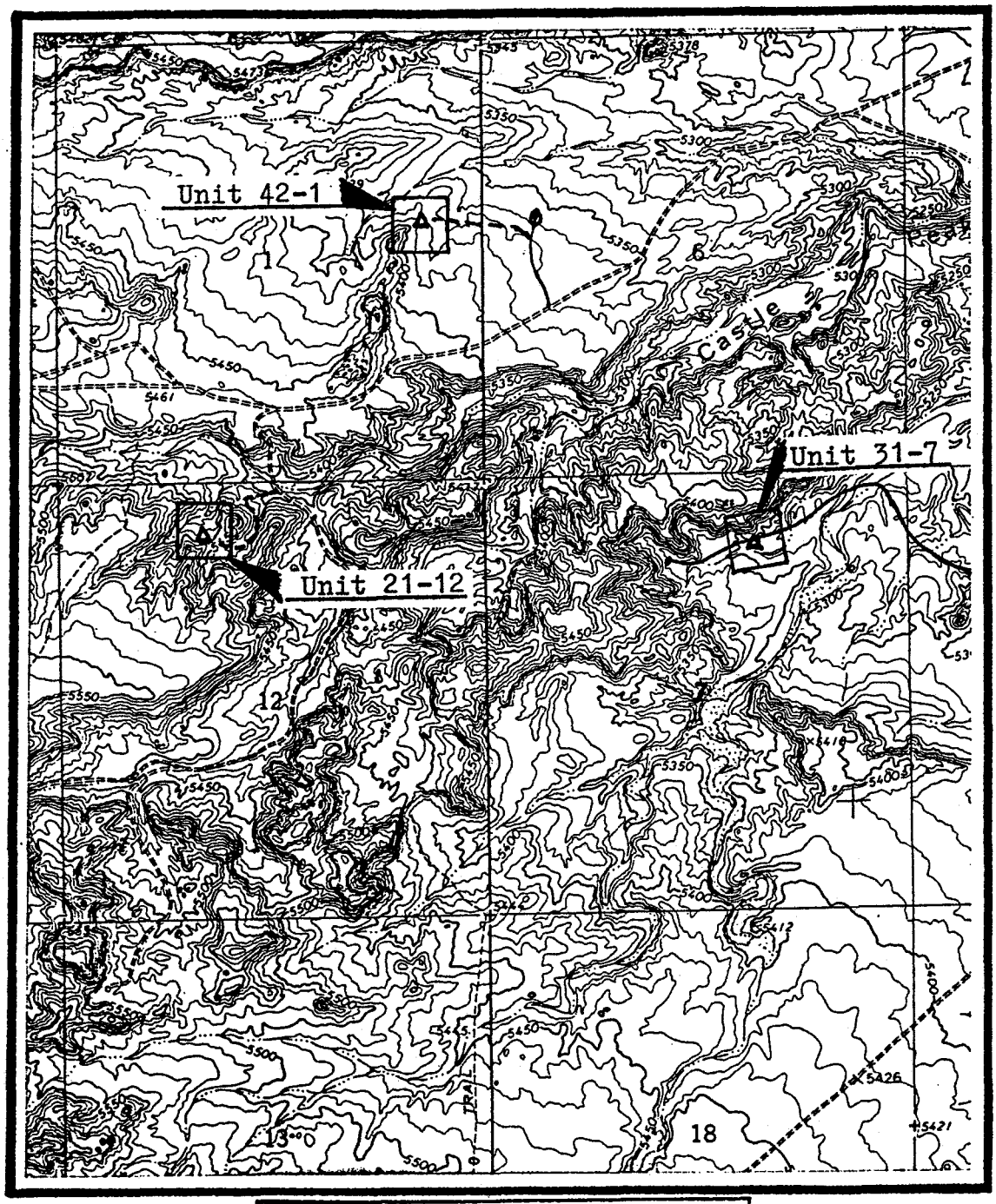

T. 9 South
R. 16 / 17 East
Meridian: SL
Quad: Myton SE
Utah

MAP 3
Cultural Resource Inventory of Proposed Well Units 42-1, 31-7 and 21-12 in the Monument Buttes Locality

Legend:
Well Center Stake
10 Acre Well Pad
Access Route
Existing Road

N

Project: BLCR-93-4
Series: Uinta Basin
Date: 8/30/93

Scale: 1:24,000

Unit 14-12J is located in the SW - SW of the previous section (Section 12). This unit is reached via an existing road which runs south from the Castle Peak Draw / Monument Buttes Oil Field access road (See Map 2). A ca. 200 foot-long access route leads west from the spur road to the well location.

Unit 24-12J is situated in the SE - SW of the previous section (Sec. 12) along the same spur road which serves the previous unit (See Map. 2). A ca. 400 foot access route leads northeasterly into this location.

Unit 42-1 is in the SE - NE quarter of Section 1 in the same township and range. This unit may be reached from a spur road leading north past the Balcron Plant in section one, just off the main Monument Buttes access road. From an existing well, the access route for this unit extends ca. .2 mi. to the west (See Map 3).

Unit 31-7 is located in the NW - NE quarter of Section 7, Township 9 South, Range 17 East. This unit lies directly adjacent to an existing road which runs northwesterly from the main Pariette Bench road located in Section 8 (See Map 3).

Unit 21-12 is situated in the NE - NW quarter of Section 12, Township 9 South, Range 16 East. From the Castle Peak Draw / Monument Buttes Oil Field road, a ca. .25 mi. access route runs west to connect with the well location (See Map 3).

Environmental Description:

The project area is within the 5400 to 5600 foot elevation zone above sea level. Open rangeland terrain and eroded Eocene lakebed surfaces are associated with the project area.

The vegetation in the project area includes *Chrysothamnus spp. Artemisia spp., Eriogonum spp., Sarcobatus vermiculatus, Ephedra viridis, Atriplex canescens,* and a variety of grasses.

The geological associations within the project area consist of fluvial and lake deposits which correlate with the Uinta Formation which is of Tertiary age.

PREVIOUS RESEARCH IN THE LOCALITY

File Search

A records search of the site files and maps at the Antiquities Section of the State Historic Preservation Office in Salt Lake City was conducted on August 23, 1993. A similar search was conducted in the Vernal District Office of the BLM on August 25, 1993. The National Register of Historic Places has been consulted and no registered historic or prehistoric properties will be affected by the proposed developments.

A variety of known cultural sites are situated in the Monument Buttes / Castle Peak Draw locality. Many of these prehistoric resources were identified and recorded by AERC during the Mapco River Bend survey (Norman and Hauck 1980). Other sites have been located and recorded by AERC and other archaeological consultants during oil and gas exploration inventories.

Prehistory and History of the Cultural Region

Currently available information indicates that the Northern Colorado Plateau Cultural Region has been occupied by a variety of cultures beginning perhaps as early as 10,000 B.C. These cultures, as identified by their material remains, demonstrate a cultural developmental process that begins with the earliest identified Paleoindian peoples (10,000 -- 7,000 B.C.) and extends through the Archaic (ca. 7,000 B.C. -- A.D. 300), and Formative (ca. A.D. 400 -- 1100) Stages, and the Late Prehistoric-Protohistoric periods (ca. A.D. 1200 -- 1850) to conclude in the Historic-Modern period which was initiated with the incursion of the Euro-American trappers, explorers, and settlers. Basically, each cultural stage -- with the exception of the Late Prehistoric hunting and gathering Shoshonean bands -- features a more complex life-way and social order than occurred during the earlier stage of development (Hauck 1991:53). For a more comprehensive treatment of the prehistory and history of this region see Archaeological Evaluations in the Northern Colorado Plateau Cultural Area (Hauck 1991).

Site Potential in the Project Development Zone

Previous archaeological evaluations in the general project area have resulted in the identification and recording of a variety of cultural resource sites having eligibility for potential nomination to the National Register of Historic Places (NRHP). The majority of these sites are lithic scatters containing cobble reduction materials. Many of these quarry sites are of the "Tap and Test" variety, and extend for tens or hundreds of meters. Open occupations are also frequently being identified in this locality. Sites associated with the open rangeland generally appear to have been occupied during the Middle Plains Archaic Stage with occasional indications of Paleoindian activity based on the recovery of isolated Plano style projectile points. The north-south drainage canyons appear to contain the majority of Late Prehistoric (Numa) sites probably because those canyon floors were transportation corridors and convenient pastures for the Ute horse herds. Evidence of Formative Stage occupation, i.e., Fremont, is rarely observed in the rangeland environment but is common within the Green River and White River canyons and their primary tributary canyons.

Site density in certain portions of the region appears to range from one to four sites per section. These densities increase in the canyon bottoms due to Ute rock art loci. Recent evaluations indicate that the site densities may reach 8 to 12 sites per section in certain localities on the upper benches which were apparently favored for hunting, lithic resource procurement, and camping. Prehistoric sites on the rangeland benches appear to be associated with water courses and aeolian deposits.

FIELD EVALUATIONS

Methodology

Intensive evaluations consisted of the archaeologist walking a series of 10 to 15 meter wide transects over a ten acre pad around each well location center stake. In addition, each access route was inventoried by the archaeologist walking a pair of 10 - 15 meter transects on each side of the flagged access route. Thus, a 35 meter-wide or 100 foot-wide corridor (ca. 9.86 acres) was examined for the total ca. .8 mile length of proposed access routes.

Observation of cultural materials results in intensive examinations to determine the nature of the resource (isolate or activity locus). The analysis of each specific cultural site results in its subsequently being sketched, photographed, and appropriately recorded on standard IMACS forms. Cultural sites are then evaluated for significance utilizing the standards described below and mitigation recommendations are considered as a means of preserving significant resources which may be situated within the development zone.

Site Significance Criteria

Prehistoric and historic cultural sites which can be considered as eligible for nomination to the National Register of Historic Places have been outlined as follows in the National Register's Criteria for Evaluation as established in Title 36 CFR 60.6:

> The quality of significance in American ... archaeology ... and culture is present in ... sites ... that possess integrity of location, design, setting, materials, workmanship, feeling, and association and:
> a. That are associated with events that have made a significant contribution to the broad patterns of our history; or
> b. that are associated with the lives of persons significant in our past; or
> c. that embody the distinctive characteristics of a type, period, or method of construction ... ; or
> d. that have yielded, or may be likely to yield, information important in prehistory or history.

In addition to satisfying one or more of these general conditions, a significant cultural resource site in Utah will generally be considered as being eligible for inclusion in the National Register if it should advance our current state of knowledge relating to chronology, cultural relationships, origins, and cultural life ways of prehistoric or historic groups in the area.

In a final review of any site's cultural significance, the site must possess integrity and at least one of the above criteria to be considered eligible for nomination to the National Record of Historic Places.

Results of the Inventory:

No prehistoric cultural resource activity loci were observed or recorded during the archaeological evaluations. No diagnostic tools or buried deposits were found within this site.

No previously recorded sites are located within the proposed development zones.

No significant or National Register sites were noted or recorded during the survey.

A number of isolated artifacts were observed or collected during the survey. A single corner notched projectile point (1395B/x1) was recovered by BLM archaeologist Blaine Phillips from near the well center stake of unit 14-12J during the initial reconnaissance of the well location. No other artifacts were noted at this location. At well unit 24-12J, an isolated exhausted core (1395G/x1) was observed on the ridge overlooking the well location. No other artifacts were noted in the vicinity. Two additional isolated artifacts were noted in the access road to unit 42-1. These finds consisted of two pieces of lithic debitage from a similar material source. Since both flakes were found in the bottom of an ephemeral drainage channel, and since no other artifacts could be located nearby, it is probably that these flakes are in a disturbed secondary context, having been transported to their present position by water action.

No paleontological loci were observed or recorded during the evaluations.

Isolated Artifact
1395B/x1

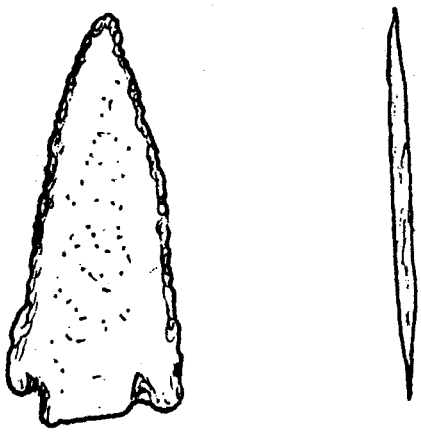

Isolated Artifact
1395G/x1

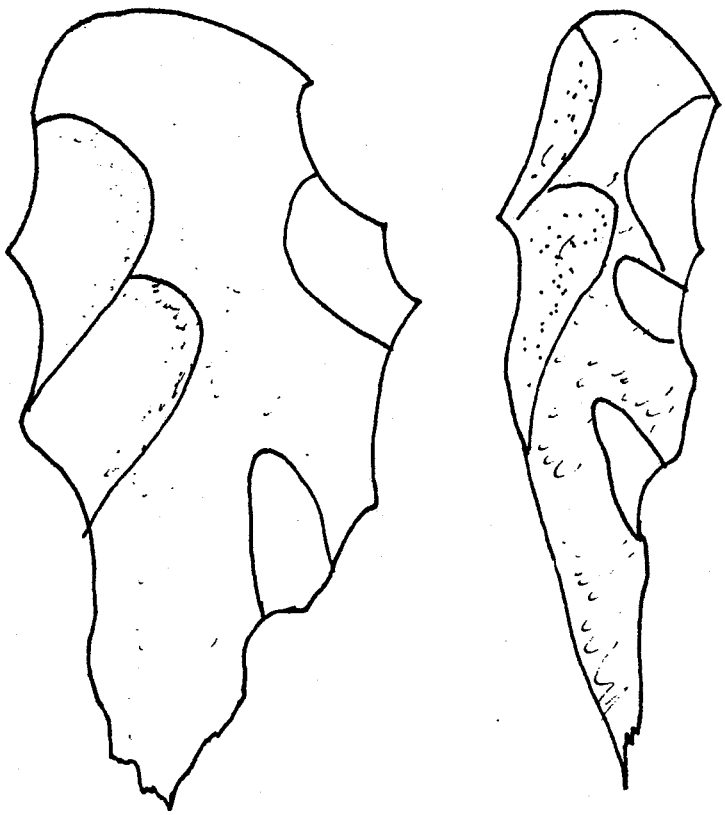

CONCLUSION AND RECOMMENDATIONS

No known significant cultural or paleontological resources will be adversely impacted during the development and operation of the Balcron Oil Company well locations evaluated during this project.

AERC recommends that a cultural resource clearance be granted to Balcron Oil Company relative to the developments proposed on these well locations based upon adherence to the following stipulations:

1. All vehicular traffic, personnel movement, construction and restoration operations should be confined to the flagged areas and corridors examined as referenced in this report, and to the existing roadways and/or evaluated access routes.

2. All personnel should refrain from collecting artifacts and from disturbing any significant cultural resources in the area.

3. The authorized official should be consulted should cultural remains from subsurface deposits be exposed during construction work or if the need arises to relocate or otherwise alter the location of the exploration area.

F. Richard Hauck, Ph.D.
President and Principal
Investigator

Glade V Hadden
Field Supervisor

REFERENCES

Hauck, F. Richard

1991 Archaeological Evaluations on the Northern Colorado Plateau Cultural Area, AERC Paper No. 45, Archeological-Environmental Research Corporation, Bountiful.

Norman, V. Garth and F.R. Hauck

1980 Final Report on the Mapco River Bend Cultural Mitigation Study. AERC Paper No. 18, of the Archeological-Environmental Research Corporation, Bountiful.

State of Utah
DEPARTMENT OF NATURAL RESOURCES
DIVISION OF OIL, GAS AND MINING

Michael O. Leavitt
Governor
Ted Stewart
Executive Director
James W. Carter
Division Director

355 West North Temple
3 Triad Center, Suite 350
Salt Lake City, Utah 84180-1203
801-538-5340
801-359-3940 (Fax)
801-538-5319 (TDD)

September 7, 1993

Equitable Resources Energy Company
P.O. Box 21017
Billings, Montana 59104

Re: Balcron Monument Federal #24-12J Well, 539' FSL, 1777' FWL, SE SW, Sec. 12, T. 9 S., R. 16 E., Duchesne County, Utah

Gentlemen:

Pursuant to Utah Code Ann. § 40-6-18, (1953, as amended), Utah Admin. R. 649-2-3, Application of Rules to Unit Agreements and R. 649-3-4, Permitting of Wells to be Drilled, Deepened or Plugged-Back, approval to drill the referenced well is hereby granted.

In addition, the following specific actions are necessary to fully comply with this approval:

1. Compliance with the requirements of Utah Admin. R. 649-1 et seq., Oil and Gas Conservation General Rules.

2. Notification within 24 hours after commencing drilling operations.

3. Submittal of Entity Action Form, Form 6, within five working days following commencement of drilling operations and whenever a change in operations or interests necessitates an entity status change.

4. Submittal of the Report of Water Encountered During Drilling, Form 7.

5. Prompt notification prior to commencing operations, if necessary, to plug and abandon the well. Notify Frank R. Matthews, Petroleum Engineer, (Office) (801)538-5340, (Home) (801)476-8613, or R.J. Firth, Associate Director, (Home) (801)571-6068.

6. Compliance with the requirements of Utah Admin. R. 649-3-20, Gas Flaring or Venting, if the well is completed for production.

Trash and sanitary waste should be properly contained and transported to approved disposal locations, not retained in or disposed of in pits on location or downhole. Prior to the commencement of drilling operations, the operator should consult the local/county sanitarian and/or the Department of Environmental Quality, Division of Drinking Water/Sanitation, regarding appropriate disposal of sanitary waste.

This approval shall expire one year after date of issuance unless substantial and continuous operation is underway or a request for an extension is made prior to the approval expiration date. The API number assigned to this well is 43-013-31409.

Sincerely,

R.J. Firth
Associate Director, Oil and Gas

ldc
Enclosures
cc: Duchesne County Assessor
Bureau of Land Management, Vernal
Jim Thompson, Field Inspection Supervisor
WOI1

Department of the Interior Authorization No .U.9.3.A.F.4.4.6.b. .
Bureau of Land Management
Utah State Office
(AERC FORMAT)

Report Acceptable Yes __ No __

Mitigation Acceptable Yes __ No __

Summary Report of
Inspection for Cultural Resources

Comments: _____

S E V E N W E L L L O C A T I O N S I N T H E

M O N U M E N T B U T T E S L O C A L I T Y

1. Report Title . . . . . .

Balcron Oil Company (BLCR-93-4)

2. Development Company

0 8 2 7 1 9 9 3 UT-92-54937

3. Report Date . . . . . 4. Antiquities Permit No.

A E R C B L C R 9 3 - 4

5. Responsible Institution . . . . . County

6. Fieldwork Location: TWN 9 S RNG 1 7 E Section 0 7

7. Resource Area TWN 9 S RNG 1 6 E Section 0 1 0 4 1 2

.S M.

8. Description of Examination Procedures: The archeologist, Glade V Hadden intensively examined the proposed well locations by walking a series of 10 to 20 meter-wide transects acress the ten acre study areas associated with each well pad and by walking paiored 10 to 20 meter transects in a 100 foot-wide corridor centered on the flagged center-line stakes for each access route.

9. Linear Miles Surveyed and/or Definable Acres Surveyed and/or Legally Undefinable Acres Surveyed . . . . . 7 9 . 8 6

10. Inventory Type . . I

R = Reconnaissance
I = Intensive
S = Statistical Sample

11. Description of Findings:
No significant or non-significant archaeological sites were identified or recorded during this survey. Three sets of isolated artifacts were observed, of which one was collected.

12. Number Sites Found .0. . . . .
(No sites = 0)

13. Collection: .Y.
Y = Yes, N = No)

14. Actual/Potential National Register Properties Affected:
The National Register of Historic Places (NRHP) has been consulted and no registered properties will be affected by the proposed development.

15. Literature Search, Location/ Date: Utah SHPO 8-23-93 Vernal BLM 8-25-93

16. Conclusion/ Recommendations:
AERC recommends that a cultural resource clearance be granted to Balcron Oil Company for this proposed development based on the following stipulations:
(see reverse)

1. All vehicular traffic, personnel movement, construction and restoration operations should be confined to the existing roadways and/or evaluated access routes.

2. All personnel should refrain from collecting artifacts and from disturbing any significant cultural resources in the area.

3. The authorized official should be consulted should cultural remains from subsurface deposits be exposed during construction work or if the need arises to relocate or otherwise alter the location of the exploration area.

---

17. Signature of Administrator & Field Supervisor

Administrator

Field Supervisor

UT 8100-3 (2/85)

EQUITABLE RESOURCES
ENERGY COMPANY
BALCRON OIL DIVISION
1601 Lewis Avenue
P.O. Box 21017
Billings, MT 59104

Office: (406) 259-7860
FAX: (406) 245-1365
FAX: (406) 245-1361

September 27, 1993

-- VIA FEDERAL EXPRESS --

Bureau of Land Management
170 South 500 East
Vernal, UT 84078

Gentlemen:

RE: Paleontology Reports

Enclosed are Paleontology Reports for the following wellsites and access roads:

Balcron Monument Federal #12-12J	43-013-31410	Sec 12 T9S R16E
Balcron Monument Federal #14-12J	43-013-31411	Sec 12 T9S R16E
Balcron Monument Federal #14-15	43-013-31389	Sec 15 T9S R16E
Balcron Monument Federal #21-12J	43-013-31406	Sec 12 T9S R16E
Balcron Monument Federal #24-12J	43-013-31409	Sec 12 T9S R16E
Balcron Monument Federal #31-7J	43-013-31405	Sec 7 T9S R17E
Balcron Monument Federal #42-1J	43-013-31404	Sec 1 T9S R16E
Balcron Federal #24-4Y	43-013-31412	Sec 4 T9S R16E

Also enclosed are the Monitoring Reports submitted by the paleontologist for the following wellsites:

Balcron Federal #21-9Y	43-013-31396	Sec 9 T9S R16E
Balcron Monument Federal #13-5	43-047-32261	Sec 5 T8S R25E

Sincerely,

Bobbie Schuman

Bobbie Schuman
Coordinator of Operations,
Environmental and Regulatory Affairs

/rs

Enclosures

cc: Utah Division of Oil, Gas and Mining

BALCRON OIL

Balcron Monument Butte Federal #24-12J

SE SW Section 12, T9S, R16E, SLB&M

Duchesne County, Utah

PALEONTOLOGY REPORT

WELLPAD LOCATION AND ACCESS ROAD

BY

ALDEN H. HAMBLIN
PALEONTOLOGIST
235 EAST MAIN
VERNAL, UTAH 84078

SEPTEMBER 14, 1993

RESULTS OF PALEONTOLOGY SURVEY AT BALCRON MONUMENT BUTTE FEDERAL #24-12J

Description of Geology and Topography-

This location is about 11 miles south and 1 mile west of Myton, Utah. It sits about 1/4 mile south of Castle Peak Draw, on the east side of a small flat bottom draw. A ridge raps around the location from the northwest, to the northern and eastern sides. They rise 40 to 50 feet above the wellpad. Drainage is to the west and then north. Rocks in the immediate area of the proposed access road and wellpad are composed of interbedded mudstone, and sandstone.

All rock outcrops in the area are of the Upper Eocene Uinta Formation, known for its fossil vertebrate fauna of mammals, turtles, crocodilians, and occasional fish remains.

Paleontological material found -

There are turtle shell fragments weathering out of a brown layer on the hillside at the north end of the wellpad. This layer extends from the northeast corner of the location west past the northwest corner of the location. The material appears to have been broken and scattered during original deposition with further breaking and scattering as the material weathers out of the hill.

Recommendations-

Wellpad construction may get into the fossiliferous layer at the north end of the wellpad, but the turtle shell fragments found are in poor condition and marginal significance. This is important as an indicator of the presence of fossil material and may provide environment of deposition information. I am not recommending that the material be collected or that the site be monitored. There is some possibility that other fossil material may be encountered during construction. If significant looking fossil bone material is discovered during construction, it should be evaluated by a paleontologist. It is also recommended that the excavated material be looked at sometime after construction to see if any fossil material was present and what condition it is in.

Alden H. Hamblin
Paleontologist

Date September 14, 1993

PALEONTOLOGY LOCALITY

Data Sheet

Page 1 of 1 plus map

State Local. No. 42 DC 135V

Agency No.

Temp. No BALCRON MONUMENT BUTTE FEDERAL #24-12J

1. Type of locality														Other_____	
Invertebrate		Plant		Vertebrate	X	Trace									

2. Formation: UINTA	Horizon: "B"	Geologic Age: Late Eocene

3. Description of Geology and Topography: This location is about 11 miles south and 1 mile west of Myton, Utah. It sits about 1/4 mile south of Castle Peak Draw, on the east side of a small flat bottom draw. A ridge raps around the location from the northwest, to the northern and eastern sides. They rise 40 to 50 feet above the wellpad. Drainage is to the west and then north. Rocks in the immediate area of the proposed access road and wellpad are composed of interbedded mudstone, and sandstone.

All rock outcrops in the area are of the Upper Eocene Uinta Formation, known for its fossil vertebrate fauna of mammals, turtles, crocodilians, and occasional fish remains.

4. Location of Outcrop: 11 miles south and 1 mile west of Myton, Utah.

5. Map Ref.	USGS Quad	Myton SE, Utah	Scale	7.5 Min	Edition	1964

NW1/4	of	SE1/4	of	SW1/4	of Sectn	12	T	9 S	R	16E	Meridn	SLB

6. State: UTAH	County: DUCHESNE COUNTY	BLM/FS District: VERNAL- DIAMOND MT.

7. Specimens Collected and Field Accession No. NONE

8. Repository:

9. Specimens Observed and Disposition: There are turtle shell fragments weathering out of a brown layer on the hillside at the north end of the wellpad. This layer extends from the northeast corner of the location west past the northwest corner of the location. The material appears to have been broken and scattered during original deposition with further breaking and scattering as the material weathers out of the hill.

10.Owner:															
Private		State		BLM	X	US FS		NPS		IND		MIL		OTHR	

11.Recommendations for Further Work or Mitigation: Wellpad construction may get into the fossiliferous layer at the north end of the wellpad, but the turtle shell fragments found are in poor condition and marginal significance. This is important as an indicator of the presence of fossil material and may provide environment of deposition information. I am not recommending that the material be collected or that the site be monitored. There is some possibility that other fossil material may be encountered during construction. If significant looking fossil bone material is discovered during construction, it should be evaluated by a paleontologist. It is also recommended that the excavated material be looked at sometime after construction to see if any fossil material was present and what condition it is in.

12.Type of Map Made by Recorder:

13.Disposition of Photo Negatives:

14.Published References: Hamblin, A. H., 1992, Paleontology Report on the Monument Butte EA Study Area, for Mariah Associates, Laramie, Wyoming.

15.Remarks:

16.Sensitivity:	Critical		Significant		Important	X	Insignificant	

17.Recorded by: Alden Hamblin, Paleontologist	Date: August 25, 1993

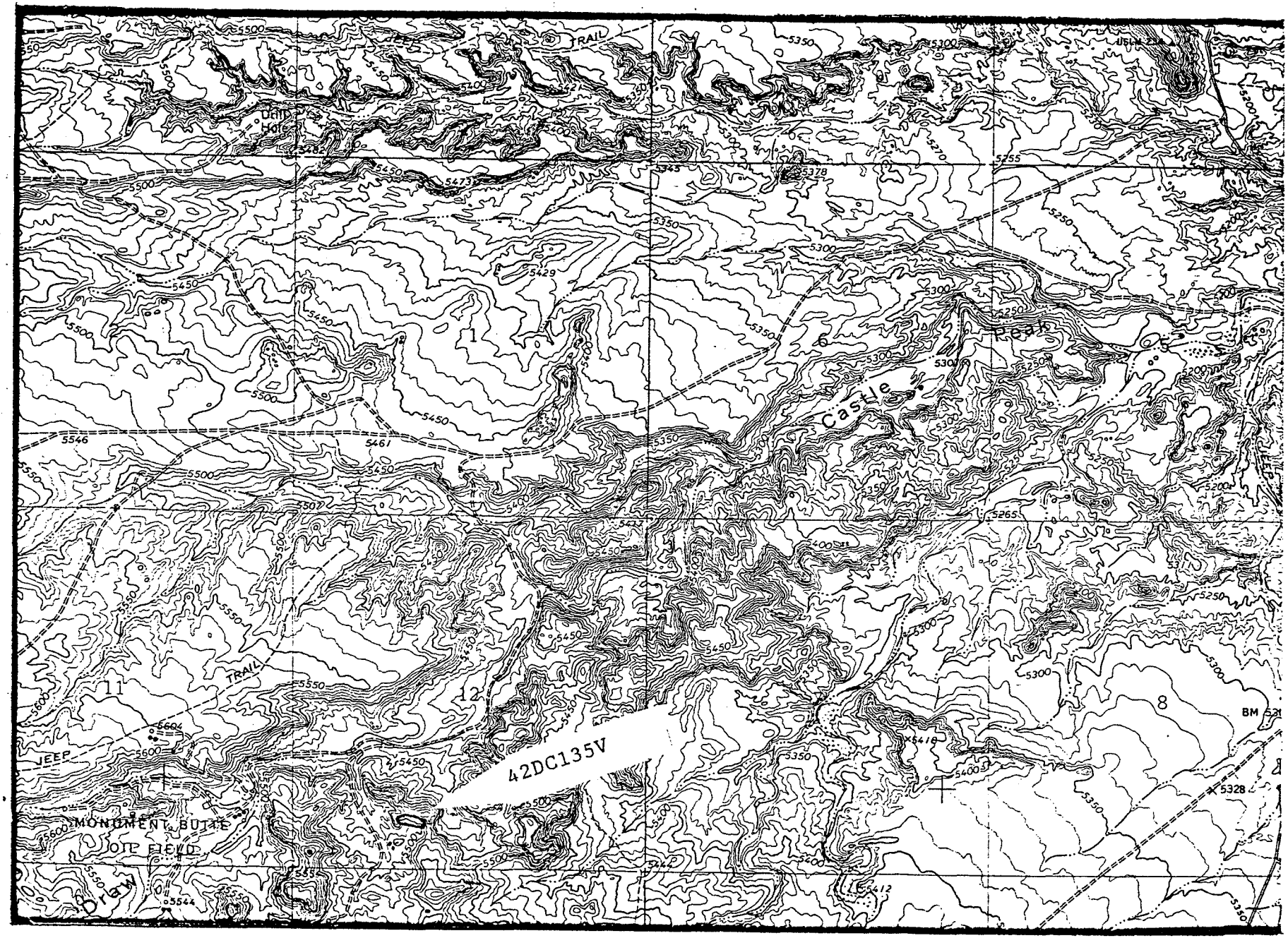

42DC135V BALCRON MONUMENT BUTTE FEDERAL #24-12J
SE SW SEC. 12, T9S, R16E, SLB&M MYTON SE, UTAH QUAD

MONUMENT BUTTE DRILLING PROGRAM

SIXTH BATCH

Balcron Federal #24-4Y
SE SW Section 4, T9S, R16E
Duchesne County, Utah
710' FSL, 2031' FWL
FLS #U-64379
PTD: 6,175'
GL 5,714.3'

Balcron Monument Federal #12-12J 43-013-31410
SW NW Section 12, T9S, R16E
Duchesne County, Utah
1980' FNL, 660' FWL
FLS #U-096550
PTD: 5,800'
GL 5,542.8'

Balcron Monument Federal #14-12J 43-013-31411
SW SW Section 12, T9S, R16E
Duchesne County, Utah
660' FSL, 660' FWL
FLS #U-035521-A
PTD: 5,750'
GL 5,487.5'

Balcron Monument Federal #24-12J 43-013-31409
SE SW Section 12, T9S, R16E
Duchesne County, Utah
539' FSL, 1777' FWL
FLS #U-035521-A
PTD: 5,700'
GL 5,495.5'

CONFIDENTIAL

Balcron Monument Federal #42-1J 43-013-31404
SE NE Section 1, T9S, R16E
Duchesne County, Utah
2087.2' FNL, 692.4' FEL
FLS #U-40652
PTD: 5,850'
GL 5,380.3'

Balcron Monument Federal #21-12J 43-013-31406
NE NW Section 12, T9S, R16E
Duchesne County, Utah
661.4' FNL, 1779.8' FWL
FLS #U-096550
PTD: 5,800'
GL 5,448.9'

Balcron Monument Federal #31-7J 43-013-31405
NW NE Section 7, T9S, R17E
Duchesne County, Utah
831.18' FNL, 1782.38' FEL
FLS #U-44426
PTD: 5,700'
GL 5,298.5'

EQUITABLE RESOURCES
ENERGY COMPANY
BALCRON OIL DIVISION
1601 Lewis Avenue
P.O. Box 21017
Billings, MT 59104

Office: (406) 259-7860
FAX: (406) 245-1365
FAX: (406) 245-1361

September 27, 1993

-- VIA FEDERAL EXPRESS --

Bureau of Land Management
170 South 500 East
Vernal, UT 84078

CONFIDENTIAL

Gentlemen:

RE: Paleontology Reports

Enclosed are Paleontology Reports for the following wellsites and access roads:

Balcron Monument Federal #12-12J	43-013-31410	Sec 12 T9S R16E
Balcron Monument Federal #14-12J	43-013-31411	Sec 12 T9S R16E
Balcron Monument Federal #14-15	43-013-31389	Sec 15 T9S R16E
Balcron Monument Federal #21-12J	43-013-31406	Sec 12 T9S R16E
Balcron Monument Federal #24-12J	43-013-31409	Sec 12 T9S R16E
Balcron Monument Federal #31-7J	43-013-31405	Sec 7 T9S R17E
Balcron Monument Federal #42-1J	43-013-31404	Sec 1 T9S R16E
Balcron Federal #24-4Y	43-013-31412	Sec 4 T9S R16E

Also enclosed are the Monitoring Reports submitted by the paleontologist for the following wellsites:

Balcron Federal #21-9Y	43-013-31396 Sec 9 T9S R16E
Balcron Monument Federal #13-5	43-047-32261 Sec 5 T8S R25E

Sincerely,

Bobbie Schuman

Bobbie Schuman
Coordinator of Operations,
Environmental and Regulatory Affairs

/rs

Enclosures

cc: Utah Division of Oil, Gas and Mining

BALCRON OIL

Balcron Monument Federal #24-4Y

SE SW Section 4, T9S, R16E, SLB&M

Duchesne County, Utah

PALEONTOLOGY REPORT

WELLPAD LOCATION AND ACCESS ROAD

BY

ALDEN H. HAMBLIN
PALEONTOLOGIST
235 EAST MAIN
VERNAL, UTAH 84078

SEPTEMBER 13, 1993

RESULTS OF PALEONTOLOGY SURVEY AT BALCRON MONUMENT BUTTE FEDERAL #24-4Y

Description of Geology and Topography-

This well location is 10 miles south and 3 miles west of Myton, Utah. The proposed access road runs about 1/4 mile from just east of well location 21-9Y northwest around 21-9Y over a low knoll, down through a round bottomed valley or drainage and northeast to the wellpad. Part of the area is covered with sandy alluvium and part is interbedded red and blue-green sandy mudstone. The wellpad sits on a gentle southeast facing slope with interbedded sandstone and the same red and blue-green mudstone layers.

All rock outcrops in the area are of the Upper Eocene Uinta Formation, known for its fossil vertebrate fauna of mammals, turtles, crocodilians, and occasional fish remains.

Paleontological material found -

No fossil vertebrate material was found on the wellpad location or access road.

Recommendations-

No other recommendations are made for this location.

Robert H. Hamblin Date September 13, 1993

EQUITABLE RESOURCES
ENERGY COMPANY
BALCRON OIL DIVISION
1601 Lewis Avenue
P.O. Box 21017
Billings, MT 59104

Office: (406) 259-7860
FAX: (406) 245-1365
FAX: (406) 245-1361

September 27, 1993

-- VIA FEDERAL EXPRESS --

Bureau of Land Management
170 South 500 East
Vernal, UT 84078

CONFIDENTIAL

Gentlemen:

RE: Paleontology Reports

Enclosed are Paleontology Reports for the following wellsites and access roads:

Balcron Monument Federal #12-12J	43-013-31410	Sec 12 T9S R16E
Balcron Monument Federal #14-12J	43-013-31411	Sec 12 T9S R16E
Balcron Monument Federal #14-15	43-013-31389	Sec 15 T9S R16E
Balcron Monument Federal #21-12J	43-013-31406	Sec 12 T9S R16E
Balcron Monument Federal #24-12J	43-013-31409	Sec 12 T9S R16E
Balcron Monument Federal #31-7J	43-013-31405	Sec 7 T9S R17E
Balcron Monument Federal #42-1J	43-013-31404	Sec 1 T9S R16E
Balcron Federal #24-4Y	43-013-31412	Sec 4 T9S R16E

Also enclosed are the Monitoring Reports submitted by the paleontologist for the following wellsites:

Balcron Federal #21-9Y	43-013-31396	Sec 9 T9S R16E
Balcron Monument Federal #13-5	43-047-32261	Sec 5 T8S R25E

Sincerely,

Bobbie Schuman

Bobbie Schuman
Coordinator of Operations,
Environmental and Regulatory Affairs

/rs

Enclosures

cc: Utah Division of Oil, Gas and Mining

BALCRON OIL

Balcron Monument Butte Federal #14-12J

SW SW Section 12, T9S, R16E, SLB&M

Duchesne County, Utah

PALEONTOLOGY REPORT

WELLPAD LOCATION AND ACCESS ROAD

BY

ALDEN H. HAMBLIN
PALEONTOLOGIST
235 EAST MAIN
VERNAL, UTAH 84078

SEPTEMBER 14, 1993

RESULTS OF PALEONTOLOGY SURVEY AT BALCRON MONUMENT BUTTE FEDERAL #14-12J

Description of Geology and Topography-

This location is about 11 miles south and 1 mile west of Myton, Utah. It sits about 1/4 mile south of Castle Peak Draw, on the west side of a small flat bottom draw. A ridge to the west rises 80 to 100 feet above the wellpad. Drainage is to the east and then north. Rocks in the immediate area of the proposed access road and wellpad are composed of interbedded mudstone, and sandstone.

All rock outcrops in the area are of the Upper Eocene Uinta Formation, known for its fossil vertebrate fauna of mammals, turtles, crocodilians, and occasional fish remains.

Paleontological material found -

Fossil locality 42DC116V, identified in the Paleontology report for Well #21-13Y, is a few yards northeast of the wellpad location, but will not be effected. The same layer in which 42DC116V is found outcrops in the hillside south of the proposed access road. There are a few turtle shell fragments weathering out in this area, but the road will pass to the north of them.

The wellpad has an occasional weathered turtle shell fragment, which appears to have washed off the ridge to the west.

Recommendations-

Most of the turtle shell fragments found are in poor condition and, while important as an indicator of the presence of fossil material, are probably not a collectable specimens. I am not recommending that the material be collected or that the site be monitored. There is some possibility that other fossil material may be encountered during construction. If significant looking fossil bone material is discovered during construction, it should be evaluated by a paleontologist.

Alden H. Hamblin
Paleontologist

Date September 14, 1993

PALEONTOLOGY LOCALITY

Data Sheet

State Local. No. 42 DC 134V

Agency No.

Temp. No BALCRON MONUMENT BUTTE FEDERAL #14-12J

1. Type of locality										Other_____	
Invertebrate		Plant		Vertebrate	X	Trace					

2. Formation: UINTA	Horizon: "B"	Geologic Age: Late Eocene

3. Description of Geology and Topography: The well location sits about 1/4 mile south of Castle Peak Draw, on the west side of a small flat bottom draw. A ridge to the west rises 80 to 100 feet above the wellpad. Drainage is to the east and then north. Rocks in the immediate area of the proposed access road and wellpad are composed of interbedded mudstone, and sandstone.

All rock outcrops in the area are of the Upper Eocene Uinta Formation, known for its fossil vertebrate fauna of mammals, turtles, crocodilians, and occasional fish remains.

4. Location of Outcrop: 11 miles south and 1 mile west of Myton, Utah.

5. Map Ref.	USGS Quad	Myton SE, Utah	Scale	7.5 Min	Edition	1964

Center	of	SW1/4	of	SW1/4	of Sectn	12	T	9 S	R	16E	Meridn	SLB

6. State: UTAH	County: DUCHESNE COUNTY	BLM/FS District: VERNAL- DIAMOND MT.

7. Specimens Collected and Field Accession No. NONE

8. Repository:

9. Specimens Observed and Disposition: Fossil locality 42DC116V, identified in the Paleontology report for Well #21-13Y, is a few yards northeast of the wellpad location, but will not be effected. The same layer in which 42DC116V is found outcrops in the hillside south of the proposed access road. There are a few turtle shell fragments weathering out in this area, but the road will pass to the north of them.

The wellpad has an occasional weathered turtle shell fragment, which appears to have washed off the ridge to the west.

10.Owner:															
Private		State		BLM	X	US FS		NPS		IND		MIL		OTHR	

11.Recommendations for Further Work or Mitigation: Most of the turtle shell fragments found are in poor condition and, while important as an indicator of the presence of fossil material, are probably not a collectable specimens. I am not recommending that the material be collected or that the site be monitored. There is some possibility that other fossil material may be encountered during construction. If significant looking fossil bone material is discovered during construction, it should be evaluated by a paleontologist.

12.Type of Map Made by Recorder:

13.Disposition of Photo Negatives:

14.Published References: Hamblin, A. H., 1992, Paleontology Report on the Monument Butte EA Study Area, for Mariah Associates, Laramie, Wyoming.

15.Remarks:

16.Sensitivity:	Critical		Significant		Important	X	Insignificant	

17.Recorded by: Alden Hamblin, Paleontologist	Date: August 25, 1993

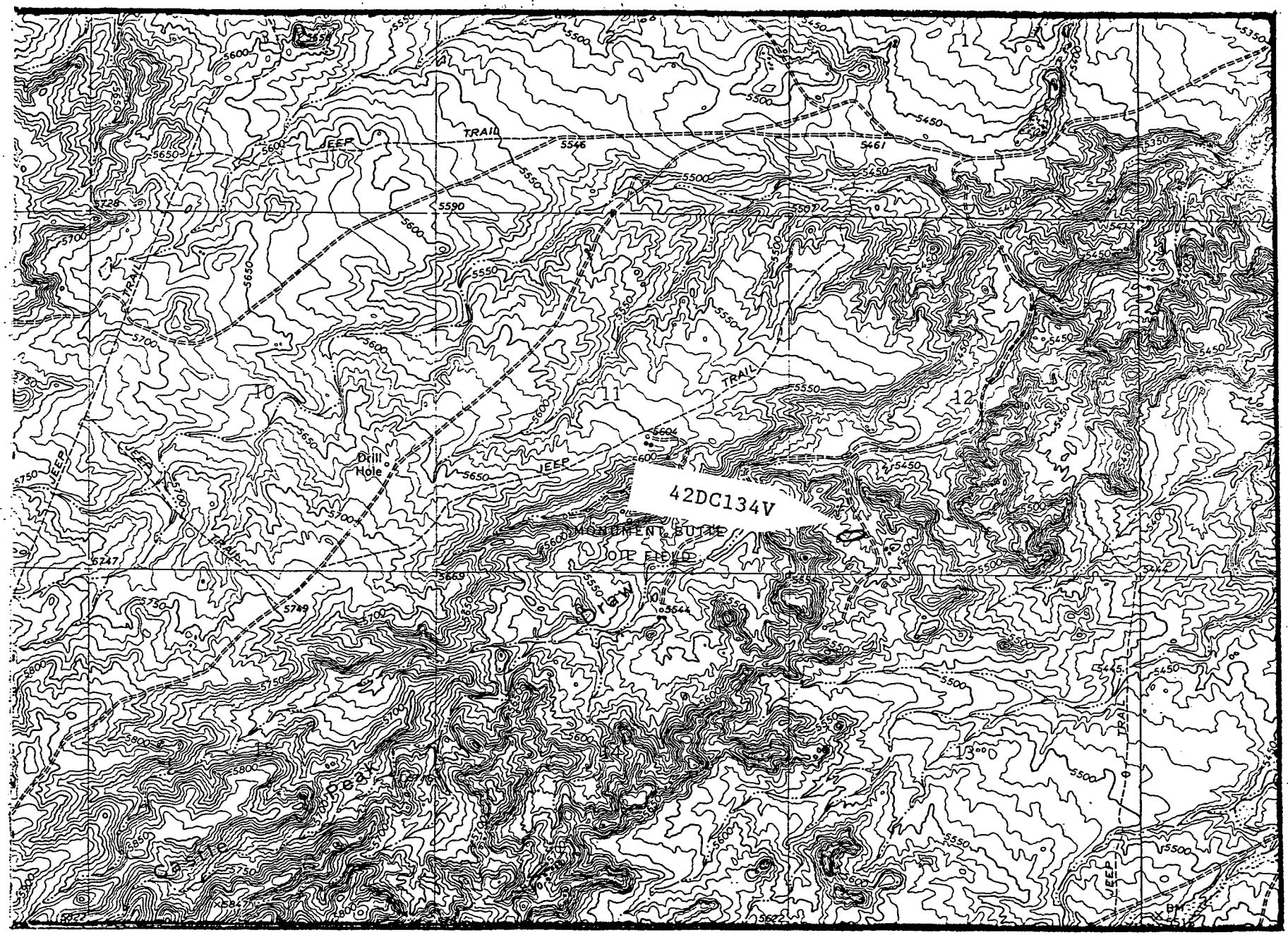

42DC134V BALCRON MONUMENT BUTTE FEDERAL #14-12J
SW SW SEC. 12, T9S, R16E, SLB&M MYTON SE, UTAH QUAD

DOGM

Form 3160-3
(November 1983)
(formerly 9-331C)

SUBMIT IN TRIPLICATE*
(Other instructions on reverse side)

Form approved.
Budget Bureau No. 1004-0136
Expires August 31, 1985

UNITED STATES
DEPARTMENT OF THE INTERIOR
BUREAU OF LAND MANAGEMENT

APPLICATION FOR PERMIT TO DRILL, DEEPEN, OR PLUG BACK

5. LEASE DESIGNATION AND SERIAL NO.: U-035521-A

6. IF INDIAN, ALLOTTEE OR TRIBE NAME: n/a

1a. TYPE OF WORK: DRILL [X] DEEPEN [ ] PLUG BACK [ ]

7. UNIT AGREEMENT NAME: Jonah Unit

b. TYPE OF WELL: OIL WELL [XX] GAS WELL [ ] OTHER — SINGLE ZONE [ ] MULTIPLE ZONE [ ]

8. FARM OR LEASE NAME: Balcron Monument Federal

2. NAME OF OPERATOR: EQUITABLE RESOURCES ENERGY COMPANY, Balcron Oil Division — CONFIDENTIAL

9. WELL NO.: #24-12J

3. ADDRESS OF OPERATOR: P.O. Box 21017; Billings, MT 59104

10. FIELD AND POOL, OR WILDCAT: Monument Butte/Grn. River

4. LOCATION OF WELL (Report location clearly and in accordance with any State requirements.*)
At surface: SE SW Section 12, T9S, R16E 539' FSL, 1777' FWL
At proposed prod. zone: 43-013-31409

11. SEC., T., R., M., OR BLK. AND SURVEY OR AREA: Sec. 12, T9S, R16E

14. DISTANCE IN MILES AND DIRECTION FROM NEAREST TOWN OR POST OFFICE*: Approximately 13 miles SW of Myton, Utah

12. COUNTY OR PARISH: Duchesne — 13. STATE: UTAH

15. DISTANCE FROM PROPOSED* LOCATION TO NEAREST PROPERTY OR LEASE LINE, FT. (Also to nearest drlg. unit line, if any)	16. NO. OF ACRES IN LEASE	17. NO. OF ACRES ASSIGNED TO THIS WELL
18. DISTANCE FROM PROPOSED LOCATION* TO NEAREST WELL, DRILLING, COMPLETED, OR APPLIED FOR, ON THIS LEASE, FT.	**19. PROPOSED DEPTH**	**20. ROTARY OR CABLE TOOLS**
	XXXXX' 5,700'	Rotary

21. ELEVATIONS (Show whether DF, RT, GR, etc.): 5,495.5' GL

22. APPROX. DATE WORK WILL START*: Upon APD Approval

23. PROPOSED CASING AND CEMENTING PROGRAM

SIZE OF HOLE	SIZE OF CASING	WEIGHT PER FOOT	SETTING DEPTH	QUANTITY OF CEMENT
See drilling program/casing design				

EXHIBITS ATTACHED

"A" PROPOSED DRILLING PROGRAM
"B" PROPOSED SURFACE USE PROGRAM
"C" GEOLOGIC PROGNOSIS
"D" DRILLING PROGRAM/CASING DESIGN
"E" EVIDENCE OF BOND COVERAGE
"F" SURVEY PLAT
"G" RIG LAYOUT
"H" BOPE DIAGRAM
"I" EXISTING ROADS (Map A)
"J" PLANNED ACCESS (Map B)
"K" EXISTING WELLS (Map C)
"L" CUT & FILL DIAGRAM

CONFIDENTIAL

RECEIVED
AUG 31 1993
DIVISION OF OIL, GAS & MINING
OCT 8 1993

SELF CERTIFICATION: I hereby certify that I am authorized, by proper lease interest owner, to conduct these operations associated with the application. Bond coverage pursuant to 43 CFR 3104 for lease activities is being provided by Equitable Resources Energy Company as principal and Safeco Insurance Company of America as surety under BLM Bond No. MT 0576 (Nationwide Oil & Gas Bond #5547188) who will be responsible for compliance with all of the terms and conditions of that portion of the lease associated with this application.

IN ABOVE SPACE DESCRIBE PROPOSED PROGRAM: If proposal is to deepen or plug back, give data on present productive zone and proposed new productive zone. If proposal is to drill or deepen directionally, give pertinent data on subsurface locations and measured and true vertical depths. Give blowout preventer program, if any.

24.
SIGNED Bobbie Schuman — TITLE Coordinator of Environmental and Regulatory Affairs — DATE August 30, 1993
Bobbie Schuman

(This space for Federal or State office use)

PERMIT NO. 43-013-31409 — APPROVAL DATE

APPROVED BY Jerry Kenczka — TITLE Acting ASSISTANT DISTRICT MANAGER MINERALS — DATE OCT 6 1993

CONDITIONS OF APPROVAL, IF ANY:

NOTICE OF APPROVAL

CONDITIONS OF APPROVAL ATTACHED TO OPERATOR'S COPY

*See Instructions On Reverse Side

Title 18 U.S.C. Section 1001, makes it a crime for any person knowingly and willfully to make to any department or agency of the United States any false, fictitious or fraudulent statements or representations as to any matter within its jurisdiction.

UT080-3M-087

CONDITIONS OF APPROVAL
APPLICATION FOR PERMIT TO DRILL

Company/Operator: Equitable Resources Energy Company

Well Name & Number: Balcron Monument Federal 24-12J

API Number: 43-013-31409

Lease Number: U-035521-A

Location: SESW Sec. 12 T. 9S R. 16E

Surface Ownership: Federal Lands administered by BLM

Date APD Received: August 31, 1993

NOTIFICATION REQUIREMENTS

Location Construction	-	at least forty-eight (48) hours prior to construction of location and access roads.
Location Completion	-	prior to moving on the drilling rig.
Spud Notice	-	at least twenty-four (24) hours prior to spudding the well.
Casing String and Cementing	-	at least twenty-four (24) hours prior to running casing and cementing all casing strings.
BOP and Related Equipment Tests	-	at least twenty-four (24) hours prior to initiating pressure tests.
First Production Notice	-	within five (5) business days after new well begins, or production resumes after well has been off production for more than ninety (90) days.

For more specific details on notification requirements, please check the Conditions of Approval for Notice to Drill and Surface Use Program.

CONDITIONS OF APPROVAL FOR NOTICE TO DRILL

Approval of this application does not warrant or certify that the applicant holds legal or equitable title to those rights in the subject lease which would entitle the applicant to conduct operations thereon.

All lease and/or unit operations will be conducted in such a manner that full compliance is made with applicable laws, regulations (43 CFR 3100), Onshore Oil and Gas Orders, and the approved plan of operations. The operator is fully responsible for the actions of his subcontractors. A copy of these conditions will be furnished the field representative to insure compliance.

Be aware fire restrictions may be in effect when location is being constructed and/or when well is being drilled. Contact the appropriate Surface Management Agency for information.

A. DRILLING PROGRAM

1. Estimated Depth at Which Oil, Gas, Water, or Other Mineral Bearing Zones are Expected to be Encountered

   Report ALL water shows and water-bearing sands to Tim Ingwell of this office. Copies of State of Utah form OGC-8-X are acceptable. If noticeable water flows are detected, submit samples to this office along with any water analyses conducted.

   All usable water and prospectively valuable minerals (as described by BLM at onsite) encountered during drilling, will be recorded by depth and adequately protected. All oil and gas shows will be tested to determine commercial potential.

2. Pressure Control Equipment

   The BOP and related equipment shall meet the minimum requirements of Onshore Oil and Gas Order No. 2 for equipment and testing requirements, procedures, etc., for a 2M system and individual components shall be operable as designed. Chart recorders shall be used for all pressure tests.

   Test charts, with individual test results identified, shall be maintained on location while drilling and shall be made available to a BLM representative upon request.

   The Vernal District Office shall be notified, at least 24 hours prior to initiating the pressure tests, in order to have a BLM representative on location during pressure testing.

3. Casing Program and Auxiliary Equipment

   Surface casing shall have centralizers on the bottom three joints, with a minimum of one centralizer per joint.

As a minimum, the usable water and oil shale resources shall be isolated and/or protected by having a cement top for the production casing at least 200 ft. above the base of the usable water zone, identified at ± 1,300 ft. If gilsonite is encountered while drilling, it shall be isolated and/or protected via the cementing program.

The Vernal District Office shall be notified at least 24 hours prior to the running and cementing of all casing strings, in order to have a BLM representative on location while running and cementing all casing strings.

4. Mud Program and Circulating Medium

Hazardous substances specifically listed by the EPA as a hazardous waste or demonstrating a characteristic of a hazardous waste will not be used in drilling, testing, or completion operations.

No chromate additives will be used in the mud system on Federal and Indian lands without prior BLM approval to ensure adequate protection of fresh water aquifers.

5. Coring, Logging and Testing Program

Daily drilling and completion progress reports shall be submitted to this office on a weekly basis.

All Drill Stem tests (DST) shall be accomplished during daylight hours, unless specific approval to start during other hours is obtained from the AO. However, DSTs may be allowed to continue at night if the test was initiated during daylight hours and the rate of flow is stabilized and if adequate lighting is available (i.e., lighting which is adequate for visibility and vaporproof for safe operations). Packers can be released, but tripping should not begin before daylight unless prior approval is obtained from the AO.

A cement bond log (CBL) will be run from the production casing shoe to ± 1,100 ft. and shall be utilized to determine the bond quality for the production casing. Submit a field copy of the CBL to this office.

Whether the well is completed as a dry hole or as a producer, "Well Completion and Recompletion Report and Log" (Form 3160-4) will be submitted not later than 30 days after completion of the well or after completion of operations being performed, in accordance with 43 CFR 3164. Two copies of all logs, core descriptions, core analyses, well-test data, geologic summaries, sample description, and all other surveys or data obtained and compiled during the drilling, workover, and/or completion operations, will be filed with Form 3160-4. Samples (cuttings, fluids, and/or gases) will be submitted when requested by the AO.

6. Notifications of Operations

No location will be constructed or moved, no well will be plugged, and no drilling or workover equipment will be removed from a well to be placed in a suspended status without prior approval of the AO. If operations are to be suspended, prior approval of the AO will be obtained and notification given before resumption of operations.

The Vernal District Office shall be notified, during regular work hours (7:45 a.m.-4:30 p.m., Monday through Friday except holidays), at least 24 hours **prior** to spudding the well.

Operator shall report production data to MMS pursuant to 30 CFR 216.5 using form MMS/3160.

Immediate Report: Spills, blowouts, fires, leaks, accidents, or any other unusual occurrences shall be promptly reported in accordance with the requirements of NTL-3A or its revision.

If a replacement rig is contemplated for completion operations, a "Sundry Notice" (Form 3160-5) to that effect will be filed, for prior approval of the AO, and all conditions of this approved plan are applicable during all operations conducted with the replacement rig.

The date on which production is commenced or resumed will be construed for oil wells as the date on which liquid hydrocarbons are first sold or shipped from a temporary storage facility, such as a test tank, and for which a run ticket is required to be generated or, the date on which liquid hydrocarbons are first produced into a permanent storage facility, whichever first occurs; and, for gas wells as the date on which associated liquid hydrocarbons are first sold or shipped from a temporary storage facility, such as a test tank, and for which a run ticket is required to be generated or, the date on which gas is first measured through permanent metering facilities, whichever first occurs.

Should the well be successfully completed for production, the AO will be notified when the well is placed in a producing status. Such notification will be sent by telegram or other written communication, not later than five (5) days following the date on which the well is placed on production.

Gas produced from this well may not be vented or flared beyond an initial authorized test period of 30 days or 50 MMCF following its completion, whichever occurs first, without the prior written approval of the Authorized Officer. Should gas be vented or flared without approval beyond the authorized test period, the operator may be directed to shut-in the well until the gas can be captured or approval to continue venting or flaring as uneconomic is granted and the operator shall be required to compensate the lessor for that portion of the gas vented or flared without approval which is determined to have been avoidably lost.

A schematic facilities diagram as required by 43 CFR 3162.7-2, 3162.7-3, and 3162.7-4 shall be submitted to the appropriate District Office within thirty (30) days of installation or first production, whichever occurs first. All site security regulations as specified in Onshore Oil & Gas Order No. 3 shall be adhered to. All product lines entering and leaving hydrocarbon storage tanks will be effectively sealed in accordance with 43 CFR 3162.7-4.

No well abandonment operations will be commenced without the prior approval of the AO. In the case of newly drilled dry holes or failures, and in emergency situations, oral approval will be obtained from the AO. A "Subsequent Report of Abandonment" Form 3160-5, will be filed with the AO within thirty (30) days following completion of the well for abandonment. This report will indicate where plugs were placed and the current status of surface restoration. Final abandonment will not be approved until the surface reclamation work required by the approved APD or approved abandonment notice has been completed to the satisfaction of the AO or his representative, or the appropriate Surface Managing Agency.

7. Other Information

All loading lines will be placed inside the berm surrounding the tank battery.

All off-lease storage, off-lease measurement, or commingling onlease or off-lease will have prior written approval from the AO.

Gas meter runs for each well will be located within 500 feet of the wellhead. The gas flowline will be buried or anchored down from the wellhead to the meter and within 500 feet downstream of the meter run or any production facilities. Meter runs will be housed and/or fenced.

The oil and gas measurement facilities will be installed on the well location. The oil and gas meters will be calibrated in place prior to any deliveries. Tests for meter accuracy will be conducted monthly for the first three months on new meter installations and at least quarterly thereafter. The AO will be provided with a date and time for the initial meter calibration and all future meter proving schedules. A copy of the meter calibration reports will be submitted to the Vernal District Office. All meter measurement facilities will conform with Onshore Oil & Gas Order No. 4 for liquid hydrocarbons and Onshore Oil & Gas Order No. 5 for natural gas measurement.

The use of materials under BLM jurisdiction will conform to 43 CFR 3610.2-3.

There will be no deviation from the proposed drilling and/or workover program without prior approval from the AO. Safe drilling and operating practices must be observed. All wells, whether drilling, producing, suspended, or abandoned will be identified in accordance with 43 CFR 3162.

"Sundry Notice and Report on Wells" (Form 3160-5) will be filed for approval for all changes of plans and other operations in accordance with 43 CFR 3162.3-2.

Section 102(b)(3) of the Federal Oil and Gas Royalty Management Act of 1982, as implemented by the applicable provisions of the operating regulations at Title 43 CFR 3162.4-1(c), requires that "not later than the 5th business day after any well begins production on which royalty is due anywhere on a lease site or allocated to a lease site, or resumes production in the case of a well which has been off production for more than 90 days, the operator shall notify the authorized officer by letter or sundry notice, Form 3160-5, or orally to be followed by a letter or sundry notice, of the date on which such production has begun or resumed."

If you fail to comply with this requirement in the manner and time allowed, you shall be liable for a civil penalty of up to $10,000 per violation for each day such violation continues, not to exceed a maximum of 20 days. See Section 109(c)(3) of the Federal Oil and Gas Royalty Management Act of 1982 and the implementing regulations at Title 43 CFR 3162.4-1(b)(5)(ii).

APD approval is valid for a period of one (1) year from the signature date. An extension period may be granted, if requested, prior to the expiration of the original approval period.

In the event after-hours approvals are necessary, please contact one of the following individuals:

Gerald E. Kenczka (801) 781-1190
Petroleum Engineer

Ed Forsman (801) 789-7077
Petroleum Engineer

BLM FAX Machine (801) 781-4410

EPA'S LIST OF NONEXEMPT EXPLORATION AND PRODUCTION WASTES

While the following wastes are nonexempt, they are not necessarily hazardous.

Unused fracturing fluids or acids

Gas plant cooling tower cleaning wastes

Painting wastes

Oil and gas service company wastes, such as empty drums, drum rinsate, vacuum truck rinsate, sandblast media, painting wastes, spend solvents, spilled chemicals, and waste acids

Vacuum truck and drum rinsate from trucks and drums, transporting or containing nonexempt waste

Refinery wastes

Liquid and solid wastes generated by crude oil and tank bottom reclaimers

Used equipment lubrication oils

Waste compressor oil, filters, and blowdown

Used hydraulic fluids

Waste solvents

Waste in transportation pipeline-related pits

Caustic or acid cleaners

Boiler cleaning wastes

Boiler refractory bricks

Incinerator ash

Laboratory wastes

Sanitary wastes

Pesticide wastes

Radioactive tracer wastes

Drums, insulation and miscellaneous solids.

SURFACE USE PLAN OF OPERATION
Conditions of Approval (COAs)

Methods for Handling Waste Disposal

The reserve pit liner will have sufficient bedding (either straw or dirt) to cover any rocks. The liner will overlap the pit walls and be covered with dirt and/or rocks to hold it in place. No trash, scrap pipe, etc., that could puncture the liner will be disposed of in the pit.

Other Additional Information

a. The operator is responsible for informing all persons in the area who are associated with this project that they will be subject to prosecution for knowingly disturbing historic or archaeological sites, or for collecting artifacts. If historic or archaeological materials are uncovered during construction, the operator is to immediately stop work that might further disturb such materials, and contact the authorized officer (AO). Within five working days the AO will inform the operator as to:

-whether the materials appear eligible for the National Register of Historic Places;

-the mitigation measures the operator will likely have to undertake before the site can be used (assuming in situ preservation is not necessary); and

-a time frame for the AO to complete an expedited review under 36 CFR 800.11 to confirm, through the State Historic Preservation Officer, that the findings of the AO are correct and that mitigation is appropriate.

If the operator wishes, at any time, to relocate activities to avoid the expense of mitigation and/or the delays associated with this process, the AO will assume responsibility for whatever recordation and stabilization of the exposed materials may be required. Otherwise, the operator will be responsible for mitigation costs. The AO will provide technical and procedural guidelines for the conduct of mitigation. Upon verification from the AO that required mitigation has been completed, the operator will then be allowed to resume construction.

b. The operator will control noxious weeds along rights-of-way for roads, pipelines, well sites, or other applicable facilities. A list of noxious weeds may be obtained from the BLM, or the appropriate County Extension Office. On BLM administered land it is required that a Pesticide Use Proposal shall be submitted, and given approval, prior to the application of herbicides or other pesticides or possible hazardous chemicals.

c. Drilling rigs and/or equipment used during drilling operations on this wellsite will not be stacked or stored on Federal Lands after the conclusion of drilling operations or at any other time without BLM authorization. However, if BLM authorization is obtained, it is only a temporary measure.

Additional Surface Conditions of Approval

A silt catchment dam and basin will be constructed according to BLM specifications approximately 200 feet northwest of the #8 corner location, where flagged.

Prior to reclaiming of any disturbed areas, the operator will contact the Authorized Officer of the BLM to determine the most desirable site specific seed mixture for reclamation. Seeding will be done in the fall, from September 15 until the ground freezes, unless otherwise approved by the AO.

A complete copy of the approved APD and ROW grant, if applicable, shall be on location during construction of the location and drilling activities.

The operator or his/her contractor shall contact the BLM Office at (801) 789-1362 twenty-four to forty-eight (24-48) hours prior to construction activities.

The BLM Office shall be notified upon site completion prior to moving on the drilling rig.

The requested emergency pit is hereby approved under Onshore Order No. 7, subject to the following Conditions of Approval:

1. If emergency use occurs, the emergency pit shall be emptied and the liquids disposed of in accordance with applicable State and/or Federal regulations within 48 hours following its use, unless such time is extended by the authorized officer.

2. As much as practicable, the emergency pit shall be located on level ground, and away from drainage patterns and unstable ground.

3. The emergency pit shall be fenced and the fence maintained for safety, and to prevent livestock and wildlife entry. The pit shall be fenced according to the same minimum standards listed for drilling the reserve pit under Point 9E of the Multi-point Surface Use and Operation Plan. The fence shall be maintained in a taut condition. Fences shall not be built on berms.

4. Produced water drain lines shall not go to the emergency pit.

5. The pit shall be bermed or otherwise constructed and maintained to prevent entrance of surface water.

6. Turn downs shall be put on the ends of pipes to direct fluids downward instead of against the wall of the pit.

7. The pit shall be kept free of trash.

Balcron shall contract a Utah BLM certified Paleontologist to survey the location and access road prior to surface disturbance to determine the presence of paleontologist resources.

If historic, archaeological, or paleontological resources are uncovered during ground disturbing activities, Balcron will suspend all operations that would further disturb such materials and immediately contact the BLM Authorized Officer.

EQUITABLE RESOURCES
ENERGY COMPANY

BALCRON OIL DIVISION

1601 Lewis Avenue
P.O. Box 21017
Billings, MT 59104

Office: (406) 259-7860
FAX: (406) 245-1365 ☐
FAX: (406) 245-1361 ☐

October 25, 1993

Bureau of Land Management
170 South 500 East
Vernal, UT 84078

Gentlemen:

RE: Balcron Monument Federal #42-1J

Balcron Monument Federal #24-12J

Balcron Monument Federal #14-12J

Balcron Monument Federal #21-12J

Enclosed is our sundries report our water source for the above referenced wells.

Please feel free to contact me if you need any additional information.

Sincerely,

Molly Conrad

Molly M. Conrad
Operations Secretary

/mc

Enclosures

cc: State of Utah, Division of Oil, Gas, & Mining

EQUITABLE RESOURCES
ENERGY COMPANY

BALCRON OIL DIVISION

1601 Lewis Avenue
P.O. Box 21017
Billings, MT 59104

Office: (406) 259-7860
FAX: (406) 245-1365 ☐
FAX: (406) 245-1361 ☐

October 25, 1993

Bureau of Land Management
170 South 500 East
Vernal, UT 84078

Gentlemen:

RE: Balcron Monument Federal #42-1J

Balcron Monument Federal #24-12J

Balcron Monument Federal #14-12J

Balcron Monument Federal #21-12J

Enclosed is our sundries report our water source for the above referenced wells.

Please feel free to contact me if you need any additional information.

Sincerely,

Molly Conrad

Molly M. Conrad
Operations Secretary

/mc

Enclosures

cc: State of Utah, Division of Oil, Gas, & Mining

Form 3160-5
(June 1990)

UNITED STATES
DEPARTMENT OF THE INTERIOR
BUREAU OF LAND MANAGEMENT

FORM APPROVED
Budget Bureau No. 1004-0135
Expires: March 31, 1993

SUNDRY NOTICES AND REPORTS ON WELLS

Do not use this form for proposals to drill or to deepen or reentry to a different reservoir.
Use "APPLICATION FOR PERMIT—" for such proposals

SUBMIT IN TRIPLICATE

1. Type of Well
[X] Oil Well [ ] Gas Well [ ] Other

2. Name of Operator
Equitable Resources Energy Company, Balcron Oil Division

3. Address and Telephone No.
P.O. Box 21017, Billings, MT 59104 (406) 259-7860

4. Location of Well (Footage, Sec., T., R., M., or Survey Description)
SE SW Section 12, T9S, R16E
539' FSL, 1777' FWL

5. Lease Designation and Serial No.
U-035521-A

6. If Indian, Allottee or Tribe Name
n/a

7. If Unit or CA, Agreement Designation
Jonah Unit

8. Well Name and No.
Balcron Monument Federal #24-12J

9. API Well No.
43-013-31409

10. Field and Pool, or Exploratory Area
Monument Butte / Green River

11. County or Parish, State
Duchesne County, Utah

12. CHECK APPROPRIATE BOX(s) TO INDICATE NATURE OF NOTICE, REPORT, OR OTHER DATA

TYPE OF SUBMISSION	TYPE OF ACTION	
[X] Notice of Intent	[ ] Abandonment	[ ] Change of Plans
[X] Subsequent Report	[ ] Recompletion	[ ] New Construction
[ ] Final Abandonment Notice	[ ] Plugging Back	[ ] Non-Routine Fracturing
	[ ] Casing Repair	[ ] Water Shut-Off
	[ ] Altering Casing	[ ] Conversion to Injection
	[X] Other Water Source	[ ] Dispose Water
		(Note: Report results of multiple completion on Well Completion or Recompletion Report and Log form.)

13. Describe Proposed or Completed Operations (Clearly state all pertinent details, and give pertinent dates, including estimated date of starting any proposed work. If well is directionally drilled, give subsurface locations and measured and true vertical depths for all markers and zones pertinent to this work.)*

Operator's water source will be from an approved source in Section 15, T4S, R2W from a well permitted by Joe Shields under permit #57708. A copy of that permit is attached to this sundry. The water will be trucked by Jim Nebeker Trucking out of Roosevelt, Utah.

RECEIVED
OCT 28 1993
DIVISION OF
OIL, GAS & MINING

CONFIDENTIAL

14. I hereby certify that the foregoing is true and correct
Signed Bobbie Schuman Title Coordinator of Environmental and Regulatory Affairs Date October 21, 1993

(This space for Federal or State office use)

Approved by _____ Title _____ Date _____
Conditions of approval, if any:

Title 18 U.S.C. Section 1001, makes it a crime for any person knowingly and willfully to make to any department or agency of the United States any false, fictitious or fraudulent statements or representations as to any matter within its jurisdiction.

*See Instruction on Reverse Side

Form 87 2M 10-70

Application No. 57708

APPLICATION TO APPROPRIATE WATER
STATE OF UTAH

47 - 1674

NOTE:—The information given in the following blanks should be free from explanatory matter, but when necessary, a complete supplementary statement should be made on the following page under the heading "Explanatory."

For the purpose of acquiring the right to use a portion of the unappropriated water of the State of Utah, for uses indicated by (X) in the proper box or boxes, application is hereby made to the State Engineer, based upon the following showing of facts, submitted in accordance with the requirements of the Laws of Utah.

1. Irrigation [X] Domestic [ ] Stockwatering [ ] Municipal [ ] Power [ ] Mining [ ] Other Uses [X]

2. The name of the applicant is Joe Shields

3. The Post Office address of the applicant is Myton, Utah 84052

4. The quantity of water to be appropriated .015 second-feet and/or ..... acre-feet

5. The water is to be used for Stockwatering & Other from ..... to .....
(Major Purpose) (Month) (Day) (Month) (Day)

other use period Irrigation from Apr. 1 to Oct. 31
(Minor Purpose) (Month) (Day) (Month) (Day)

and stored each year (if stored) from ..... to .....
(Month) (Day) (Month) (Day)

6. The drainage area to which the direct source of supply belongs is .....
(Leave Blank)

7. The direct source of supply is* Drain
(Name of stream or other source)

which is tributary to ....., tributary to .....

*Note.- Where water is to be diverted from a well, a tunnel, or drain, the source should be designated as "Underground Water" in the first space and the remaining spaces should be left blank. If the source is a stream, a spring, a spring area, or a drain, so indicate in the first space, giving its name, if named, and in the remaining spaces, designate the stream channels to which it is tributary, even though the water may sink, evaporate, or be diverted before reaching said channels. If water from a spring flows in a natural surface channel before being diverted, the direct source should be designated as a stream and not a spring.

8. The point of diversion from the source is in Duchesne County, situated at a point*
West 900 ft. South 1100ft. from E¼ Cor. Sec. 15, T4S,R2W, USB&M
(3½ Miles SW of Myton)
Myton Quad.

*Note.—The point of diversion must be located definitely by course and distance or by giving the distances north or south, and east or west with reference to a United States land survey corner or United States mineral monument, if within a distance of six miles of either, or if at a greater distance, to some prominent and permanent natural object. No application will be received for filing in which the point of diversion is not defined definitely.

9. The diverting and carrying works will consist of a collection ditch to place of use

10. If water is to be stored, give capacity of reservoir in acre-feet ..... height of dam .....
area inundated in acres ..... legal subdivision of area inundated .....

11. If application is for irrigation purposes, the legal subdivisions of the area irrigated are as follows:
NE¼SE¼ Sec. 15, T4S,R2W, USB&M

Total .25 Acres

12. Is the land owned by the applicant? Yes X No ..... If "No," explain on page 2.

13. Is this water to be used supplementally with other water rights? Yes ..... No X
If "yes," identify other water rights on page 2.

14. If application is for power purposes, describe type of plant, size and rated capacity. .....

15. If application is for mining, the water will be used in ..... Mining District at the ..... mine, where the following ores are mined .....

16. If application is for stockwatering purposes, number and kind of stock watered 320 Cattle
in NE¼SE¼ Sec. 15, T4S,R2W, USB&M

17. If application is for domestic purposes, number of persons ....., or families .....

18. If application is for municipal purposes, name of municipality .....

19. If application is for other uses, include general description of proposed uses Oil Field use

20. Give place of use by legal subdivision of the United States Land Survey for all uses described in paragraphs 14 to 19, incl. Myton Oil Field in Pleasant Valley

21. The use of water as set forth in this application will consume .015 second-feet and/or acre-feet of water and None second feet and/ or acre feet will be returned to the natural stream or source at a point described as follows: .....

EXPLANATORY

The following additional facts are set forth in order to define more clearly the full purpose of the proposed application:

(Use page 4 if additional explanatory is needed.)

The quantity of water sought to be appropriated is limited to that which can be beneficially used for the purpose herein described.

Signature of Applicant*

*If applicant is a corporation or other organization, signature must be the name of such corporation or organization by its proper officer, or in the name of the partnership by one of the partners, and the names of the other partners shall be listed. If a corporation or partnership, the affidavit below need not be filled in. If there is more than one applicant, a power of attorney, authorizing one to act for all, should accompany the Application.

DECLARATION OF CITIZENSHIP

STATE OF UTAH, Uintah } ss
County of.....

On the 10th day of BALLOON May 19 82, personally appeared before me, a notary public for the State of Utah, the above applicant who, on oath, declared that he is a citizen of the United States, or has declared his intention to become such a citizen.

My commission expires:

(SEAL) FREDDOR NOTARY PUBLIC State of Utah

Notary Public

CONFIDENTIAL

DIVISION OF OIL, GAS AND MINING

SPUDDING INFORMATION

NAME OF COMPANY: EQUITABLE RESOURCES

WELL NAME: MONUMENT FEDERAL 24-12J

API NO. 43-013-31409

Section 12 Township 9S Range 16E County DUCHESNE

Drilling Contractor

Rig #

SPUDDED: Date 11/7/93

Time 11:00 AM

How DRY HOLE

Drilling will commence

Reported by AL PLUNKETT

Telephone # 1-823-6759

Date 11/9/93 SIGNED JLT

Balcron Oil
DAILY OPERATING REPORT

DATE: 11/9/93

****JONAH UNIT PARTNERS' DAILY REPORT****

BALCRON MONUMENT FEDERAL #42-1J
---TIGHT HOLE---

Operator: EREC/Balcron
BOD WI: 79.78%
Location: SE NE Section 1, T9S, 16E
Duchesne County, Utah
Prospect: Jonah Unit / Monument Butte
PTD: 5,850' Green River Oil - Dev.

11-9-93 TD: 3,061' (1,014') Day 3
Formation: Green River
MW 8.3 VIS 26
Present Operation: Run magnet.
Drill, survey, blow hole out, bit locking up. TIH w/magnet for bearings & part of 1 cone.
DC: $14,016 CC: $67,625

BALCRON MONUMENT FEDERAL #23-15
---TIGHT HOLE---

Operator: Balcron/EREC
BOD WI: 79.78%
Location: NE SW Section 15, T9S, R16E
Duchesne County, Utah
Prospect: Monument Butte

11-8-93 Completion
CP - 0, TP - 5 psi. Made 20 swab runs, recovered 120 BF, 115 wtr, 5 oil. Last 3 runs, 3% oil, fluid level stable @ 3300'. Release packer, tag sand @ 5430', circ down to 5625' (PBTD). TOOH w/tbg, SN, & packer. SWIFN.
DC: $1,393

BALCRON MONUMENT FEDERAL #24-12J
---TIGHT HOLE---

Operator: EREC/Balcron
BOD WI: 79.78%
Location: SE SW Section 12, T9S, R16E
Duchesne County, Utah
Prospect: Jonah Unit / Monument Butte
PTD: 5,700' Green River Oil - Dev.

11-8-93 Well spud @ 11 a.m. on 11-8-93 by Leon Ross Air Drilling.

EQUITABLE RESOURCES
ENERGY COMPANY

BALCRON OIL DIVISION

1601 Lewis Avenue
P.O. Box 21017
Billings, MT 59104

Office: (406) 259-7860
FAX: (406) 245-1365
FAX: (406) 245-1361

November 9, 1993

Bureau of Land Management
170 South 500 East
Vernal, UT 84078

Gentlemen:

RE: Balcron Monument Federal #24-12J
SE SW Section 12, T9S, R16E
Duchesne County, Utah

Enclosed is our sundry reporting spud on the subject well.

Please feel free to contact me if you need any additional information.

Sincerely,

Molly Conrad

Molly M. Conrad
Operations Secretary

/mc

cc: State of Utah, Division of Oil, Gas, & Mining - also enclosed is our Entity Actio Form
Dawn Schindler
Mary Lou Dixon, Uintah Basin Health Dept. - VIA FAX

CONFIDENTIAL

Form 3160-5
(June 1990)

UNITED STATES
DEPARTMENT OF THE INTERIOR
BUREAU OF LAND MANAGEMENT

FORM APPROVED
Budget Bureau No. 1004-0135
Expires: March 31, 1993

SUNDRY NOTICES AND REPORTS ON WELLS

Do not use this form for proposals to drill or to deepen or reentry to a different reservoir.
Use "APPLICATION FOR PERMIT—" for such proposals

SUBMIT IN TRIPLICATE

5. Lease Designation and Serial No.: U-035521-A

6. If Indian, Allottee or Tribe Name: n/a

7. If Unit or CA, Agreement Designation: Jonah Unit

1. Type of Well: [X] Oil Well [ ] Gas Well [ ] Other

8. Well Name and No.: Balcron Monument Federal #24-12J

2. Name of Operator: Equitable Resources Energy Company, Balcron Oil Division

9. API Well No.: 43-013-31409

3. Address and Telephone No.: P.O. Box 21017, Billings, MT 59104 (406) 259-7860

10. Field and Pool, or Exploratory Area: Monument Butte / Green River

4. Location of Well (Footage, Sec., T., R., M., or Survey Description)
SE SW Section 12, T9S, R16E
539' FSL, 1777' FWL

11. County or Parish, State: Duchesne County, Utah

12. CHECK APPROPRIATE BOX(s) TO INDICATE NATURE OF NOTICE, REPORT, OR OTHER DATA

TYPE OF SUBMISSION	TYPE OF ACTION	
[ ] Notice of Intent	[ ] Abandonment	[ ] Change of Plans
[X] Subsequent Report	[ ] Recompletion	[ ] New Construction
[ ] Final Abandonment Notice	[ ] Plugging Back	[ ] Non-Routine Fracturing
	[ ] Casing Repair	[ ] Water Shut-Off
	[ ] Altering Casing	[ ] Conversion to Injection
	[X] Other Report of Spud.	[ ] Dispose Water

(Note: Report results of multiple completion on Well Completion or Recompletion Report and Log form.)

13. Describe Proposed or Completed Operations (Clearly state all pertinent details, and give pertinent dates, including estimated date of starting any proposed work. If well is directionally drilled, give subsurface locations and measured and true vertical depths for all markers and zones pertinent to this work.)*

This well spud at 11:00 a.m. on 11-8-93 (Leon Ross Air Drilling).

RECEIVED
NOV 12 1993
DIVISION OF
OIL, GAS & MINING

14. I hereby certify that the foregoing is true and correct

Signed Bobbie Schuman (Bobbie Schuman) Title Coordinator of Environmental and Regulatory Affairs Date 11-8-93

(This space for Federal or State office use)

Approved by _____ Title _____ Date _____
Conditions of approval, if any:

Title 18 U.S.C. Section 1001, makes it a crime for any person knowingly and willfully to make to any department or agency of the United States any false, fictitious or fraudulent statements or representations as to any matter within its jurisdiction.

*See Instruction on Reverse Side

Balcron Oil
DAILY OPERATING REPORT

DATE: 11/17/93

****JONAH UNIT PARTNERS' DAILY REPORT****

BALCRON MONUMENT FEDERAL #21-12J

Operator: EREC/Balcron
BOD WI: 79.78%
Location: NE NW Section 12, T9S, R16E
Duchesne County, Utah
Prospect: Jonah Unit / Monument Butte

---TIGHT HOLE---

PTD: 5800' Green River Oil - Dev.

11-17-93 TD: 2,550' (1,549') Day 2
Formation: Green River
MW 8.3 VIS 26
Present Operation: Drilling
Drill, survey, & repair flow line.
DC: $20,126 CC: $62,482

BALCRON MONUMENT FEDERAL #12-12J

Operator: EREC/Balcron
BOD WI: 79.78%
Location: SW NW Section 12, T9S, R16E
Duchesne County, Utah
Prospect: Jonah Unit / Monument Butte

---TIGHT HOLE---

11-16-93 Completion
CP - 0, TP - 0. TOOH w/tbg, packer & retrieving tool. RU Cutters to perf 5029'-33' (2 SPF). RD Cutters. TIH w/retrieving tool, HD packer, SN & 161 jts 2-7/8" tbg. Set packer @ 4984' KB, EOT @ 5003'. RU Western to do HCL break down on perfs 4029-33'. Spot 500 gals 15% HCL @ EOT, set packer **refer to treatment report.** Pressure test surface euqipment to 5000 psi - OK. Could not pump into perfs at 4000 psi, lower EOT to reset BP @ 5260' & set packer @ 5189' & EOT @ 5220'. Start break down - no break. Release packer set end of tbg @ 5241'. SWIFN.
DC: $8,919

EQUITABLE RESOURCES ENERGY COMPANY
BALCRON OIL DIVISION
1601 Lewis Avenue
P.O. Box 21017
Billings, MT 59104-1017

TREATMENT REPORT

Date of Treatment: 11-16-93

Well Name Monument Fed. 12-12J SEC. 12 TWN. 9S RNG. 16E.

Field Monument Butte County Duchesne State Utah

Formation/Perforations: Green River / 5225-29, 5237-44

Treatment type: KCL BREAK DOWN Total Number of Holes: 11

Volume	Fluid	Conc.	Sand Characteristics Size	Volume
____ Gal.				
____ Gal.				
____ Gal.				
____ Gal.		/		#
____ Gal.		/		#
____ Gal.		/		#
____ Gal.		/		#
____ Gal.		/		#
____ Gal.		/		#
____ Gal.		/		#
____ Gal.		/		#

TOTAL FLUID PUMPED: ____ gal. ____ % ____ Acid
____ gal. ____ fluid

TOTAL SAND VOL.: ____ lbs. ____ / ____ sand
____ lbs. ____ / ____ sand
____ lbs. ____ / ____ sand
____ lbs. ____ / ____ bauxite

Flushed well with ____ gal. of ____
22 ball sealers were pumped. Was ball action seen? ____
Barrels of Load to Recover ____ BLTR.
Avg. Treating Pressure = ____ psi, max = 4150 psi, min = ____ psi.
Avg. Treating Rate = ____ bpm, max = ____ bpm, min = ____ bpm.
ISIP = ____ psi, 5 min. = ____ psi, 10 min. = ____ psi, 15 min. = ____ psi.
Well will be shut in for ____ hrs. before bringing back fluid.

REMARKS: INITIAL BREAKAT ____ PSI AT ____ BPM, BACK TO ____ PSI AT ____ BPM.
NO BREAK

EQUITABLE RESOURCES
ENERGY COMPANY
BALCRON OIL DIVISION
1601 Lewis Avenue
P.O. Box 21017
Billings, MT 59104-1017

TREATMENT REPORT

Date of Treatment: 11-16-93

Well Name Monument Fed. 12-12 J SEC. 12 TWN. 9 S RNG. 16 E

Field Monument Butte County Duchesne State Utah

Formation/Perforations: 5029-33 Green River

Treatment type: ACID BREAK DOWN Total Number of Holes: 8

Volume	Fluid	Conc.	Sand Characteristics Size	Volume
_____ Gal.				
_____ Gal.				
_____ Gal.				
_____ Gal.			/	#
_____ Gal.			/	#
_____ Gal.			/	#
_____ Gal.			/	#
_____ Gal.			/	#
_____ Gal.			/	#
_____ Gal.			/	#
_____ Gal.			/	#

TOTAL FLUID PUMPED: 500 gal. 15% HCL Acid
_____ gal. _____ fluid

TOTAL SAND VOL.: _____ lbs. _____ / _____ sand
_____ lbs. _____ / _____ sand
_____ lbs. _____ / _____ sand
_____ lbs. _____ / _____ bauxite

Flushed well with _____ gal. of _____
16 ball sealers were pumped. Was ball action seen? YES
Barrels of Lead to Recover 103 BLTR.

Avg. Treating Pressure = 1900 psi, max = 2060 psi, min = 186 psi.
Avg. Treating Rate = 3.5 bpm, max = 4.0 bpm, min = 2.6 bpm.
ISIP = 1300 psi, 5 min. = _____ psi, 10 min. = _____ psi, 15 min. = _____ psi.
Well will be shut in for 0 hrs. before bringing back fluid.

REMARKS: INITIAL BREAK AT 1200 PSI AT 3 BPM, BACK TO 1600 PSI AT 3.9 BPM
PUMP 2 BALL per BBL, SEAGE BALLS OFF.
PUMP for Rate 6.5 BPM AT 2500 PSI

STATE OF UTAH
DIVISION OF OIL, GAS AND MINING

ENTITY ACTION FORM - FORM 6

OPERATOR Equitable Resources Energy Company
Balcron Oil Division

ADDRESS P.O. Box 21017
Billings, MT 59104

(406) 259-7860

OPERATOR ACCT. NO. N0890

ACTION CODE	CURRENT ENTITY NO.	NEW ENTITY NO.	API NUMBER	WELL NAME	WELL LOCATION QQ	SC	TP	RG	COUNTY	SPUD DATE	EFFECTIVE DATE
B	11492	11492	43-013-31409	Balcron Monument Federal #24-12J	SE SW	12	9S	16E	Duchesne	11-8-93	11-8-93
WELL 1 COMMENTS: Please add to Jonah Unit. Entity added 11-18-93. Lc											
WELL 2 COMMENTS:											
WELL 3 COMMENTS:											
WELL 4 COMMENTS:											
WELL 5 COMMENTS:											

ACTION CODES (See instructions on back of form)
- A - Establish new entity for new well (single well only)
- B - Add new well to existing entity (group or unit well)
- C - Re-assign well from one existing entity to another existing entity
- D - Re-assign well from one existing entity to a new entity
- E - Other (explain in comments section)

NOTE: Use COMMENT section to explain why each Action Code was selected.

(3/89)

Signature Bobbie Schuman
Coordinator of Environmental and Regulatory Affairs
Title

11-8-93
Date

Phone No. (406) 259-7860

Balcron Oil
DAILY OPERATING REPORT

DATE: 12/3/93

****JONAH UNIT PARTNERS' DAILY REPORT****

BALCRON MONUMENT FEDERAL #42-1J

Operator: EREC/Balcron
BOD WI: 79.78%
Location: SE NE Section 1, T9S, 16E
Duchesne County, Utah
Prospect: Jonah Unit / Monument Butte

---TIGHT HOLE---

12-2-93 Completion
CP - 0. TIH w/production string as follows:

	Length	Depth KB
1 jt 2-7/8" tbg, EUE J-55, 8RD, 6.5#	31.65'	5367.60'
1 Perf sub 2-7/8' x 3'	3.20'	5335.95'
1 seating nipple	1.10'	5332.75'
171 jts 2-7/8" EUE, J-55, 8RD, 6.5#	5321.65'	5331.65'
Union Drilling KB	10.00	

ND BOP, NU wellhead. TIH w/BHP 2-1/2" x 1-1/2" RWAC w/PA plunger; 212 3/4" x 25' plain rods D-61; one 3/4" x 8' pony; one 1-1/4" x 22' polish rod SM. Clamp rod off. RDMO.
DC: $9,053'

BALCRON MONUMENT FEDERAL #24-12J

Operator: EREC/Balcron
BOD WI: 79.78%
Location: SE SW Section 12, T9S, R16E
Duchesne County, Utah
Prospect: Jonah Unit / Monument Butte
PTD: 5,700' Green River Oil - Dev.

---TIGHT HOLE---

10-25/31-92 Work on and finish location.

11-8-93 MIRU Leon Ross Drilling & start, break down.

11-9-93 Drill 12-1/4" hole to 275'.

11-10-93 Run 6 jts 8-5/8" csg & cmt as follows:

Guide Shoe	.60'
1 jt 8-5/8" 24# shoe jt	45.11'
Insert	----
5 jts 8-5/8"	225.57'
	271.28'
Csg set @	269' GL
Union Drilling KB (10')	279' KB

Cmt by Dowell w/150 sxs "G" + 2% CCL & 1/4#/sx Celoflakes. Good returns, approximately 8 bbls to pit. Plug down @ 11 a.m. 11-10-93.
DC: $4,210 CC: $26,878

12-3-93 Couldn't get trucks, work on rig, replace brake pads on hoisting drum. Moving now.
DC: $400 CC: $27,278

DAILY OPERATING REPORT

BALCRON MONUMENT FEDERAL #24-12J
Location: SE SW Section 12, T9S, R16E
Duchesne County, Utah
539' FSL 1777' FWL

12-4-93 TD: 658' (379') Day 1
Formation: Uintah
MW 8.4 VIS 26
Present Operation: Drilling
MIRU, NU BOP. Test BOP & manifold to 2000# - OK. Test cst to 1500# - OK. PU drill collars & drill cmt, survey & drill. Work on booster.
DC: $6,012 CC: $33,290

12-5-93 TD: 2,338' (1,680') Day 2
Formation: Green River
MW 8.4 VIS 26
Present Operation: Run survey.
Drill, survey, & clean on rig.
DC: $21,608 CC: $54,898

12-6-93 TD: 3,582' (1,244') Day 3
Formation: Green River
MW 8.3 VIS 26
Present Operation: Drilling
Drill, survey, clean on rig. Good clean sand 2,700'-2,800' with gas in it.
DC: $16,392 CC: $71,290

DAILY OPERATING REPORT

BALCRON MONUMENT FEDERAL #24-12J
Location: SE SW Section 12, T9S, R16E
Duchesne County, Utah
539' FSL 1777' FWL

12-4-93 TD: 658' (379') Day 1
Formation: Uintah
MW 8.4 VIS 26
Present Operation: Drilling
MIRU, NU BOP. Test BOP & manifold to 2000# - OK. Test cst to 1500# - OK. PU drill collars & drill cmt, survey & drill. Work on booster.
DC: $6,012 CC: $33,290

12-5-93 TD: 2,338' (1,680') Day 2
Formation: Green River
MW 8.4 VIS 26
Present Operation: Run survey.
Drill, survey, & clean on rig.
DC: $21,608 CC: $54,898

12-6-93 TD: 3,582' (1,244') Day 3
Formation: Green River
MW 8.3 VIS 26
Present Operation: Drilling
Drill, survey, clean on rig. Good clean sand 2,700'-2,800' with gas in it.
DC: $16,392 CC: $71,290

12-7-93 TD: 4,706' (1,124') Day 4
Formation: Red Zone
MW 8.3 VIS 26
Present Operation: Drilling
Drill, survey, & clean on rig.
DC: $15,955 CC: $87,245

DAILY OPERATING REPORT

BALCRON MONUMENT FEDERAL #24-12J
Location: SE SW Section 12, T9S, R16E
Duchesne County, Utah
539' FSL 1777' FWL

12-4-93 TD: 658' (379') Day 1
Formation: Uintah
MW 8.4 VIS 26
Present Operation: Drilling
MIRU, NU BOP. Test BOP & manifold to 2000# - OK. Test cst to 1500# - OK. PU drill collars & drill cmt, survey & drill. Work on booster.
DC: $6,012 CC: $33,290

12-5-93 TD: 2,338' (1,680') Day 2
Formation: Green River
MW 8.4 VIS 26
Present Operation: Run survey.
Drill, survey, & clean on rig.
DC: $21,608 CC: $54,898

12-6-93 TD: 3,582' (1,244') Day 3
Formation: Green River
MW 8.3 VIS 26
Present Operation: Drilling
Drill, survey, clean on rig. Good clean sand 2,700'-2,800' with gas in it.
DC: $16,392 CC: $71,290

12-7-93 TD: 4,706' (1,124') Day 4
Formation: Red Zone
MW 8.3 VIS 26
Present Operation: Drilling
Drill, survey, & clean on rig.
DC: $15,955 CC: $87,245

12-8-93 TD: 5,636' (930') Day 5
Formation: Green River
MW 8.3 vIS 26
Present Operation: Drilling
Drill, survey, trip 4 stds to get broken survey line, drill & survey.
DC: $13,771 CC: $101,016

Balcron Oil
DAILY OPERATING REPORT

DATE: 12/9/93

****JONAH UNIT PARTNERS' DAILY REPORT****

BALCRON MONUMENT FEDERAL #24-12J **Operator: EREC/Balcron**
BOD WI: 79.78%
Location: SE SW Section 12, T9S, R16E
Duchesne County, Utah
Prospect: Jonah Unit / Monument Butte

---TIGHT HOLE---

12-9-93 TD: 5,700' (64') Day 6
Formation: Green River
MW 8.4 VIS 26
Present Operation: WO float collar.
Drill, load hole w/fluid & circ, trip out for logs. Log well, TIH, LD drill pipe & collars. Test pipe rams to 2000# - OK. Run 5-1/2" csg, cross thread jt in float collar. WO float collar.
DC: $19,342 CC: $120,358

BALCRON MONUMENT FEDERAL #14-12J **Operator: EREC/Balcron**
BOD WI: 79.78%
Location: SW SW Section 12, T9S, R16E
Duchesne County, Utah
Prospect: Jonah Unit/Monument Butte

---TIGHT HOLE---

12-8-93 Completion
CP - 0. Pull up to 4373' KB, set BP. TOOH w/tbg & tools. RU Schlumberger to perf 4097'-4104' (5 holes) & 4299'-4308' (6 holes). TIH w/retrieving tool, 1 jts 2-7/8" tbg, 5-1/2" HD packer, SN & 136 jts 2-7/8" tbg. Set packer @ 4244' KB EOT 4279' KB. RU Halliburton to do KCL break down on 4299'-4308' **refer to treatment report.** Reset BP @ 4161' KB, set packer @ 4032' KB, EOT 4067' KB. Do KCL break down on 4097'-4104' **refer to treatment report.** RD Halliburton. Release BP, reset BP @ 4373' KB. TOOH w/tbg & packer. SWIFN.
DC: $2,442

BALCRON MONUMENT FEDERAL #31-7J **Operator: EREC/Balcron**
BOD WI: 79.78%
Location: NW NE Section 7, T9S, R17E
Duchesne County, Utah
Prospect: Jonah Unit/Monument Butte Field

---TIGHT HOLE---

12-8-93 Completion
RU Schlumberger to run CBL & perforate 5050'-55', 5062'-64', 5080'-86', & 5100'-06' (2 SPF). Cmt top 1830' KB. RD Schlumberger. TIH 5-1/2" RBP, retrieving head, HD packer, SN & 163 jts 2-7/8" tbg, set BP 5072' KB, packer @ 5021' KB, EOT 5026' KB. RU Western to break down 5050'-55 & 5062'-64' **refer to treatment report.** Reset BP @ 5140' KB, set packer @ 5072' KB EOT @ 5077' KB. Break down 5080'-86' & 5100'-06' **refer to treatment report.** TOOH w/tbg & packer. SWIFN.
DC: $7,817

BALCRON MONUMENT FEDERAL #24-12J
---TIGHT HOLE---

Operator: EREC/Balcron
BOD WI: 79.78%
Location: SE SW Section 12, T9S, R16E
Duchesne County, Utah
Prospect: Jonah Unit / Monument Butte

No report at report time.

BALCRON MONUMENT FEDERAL #14-12J
---TIGHT HOLE---

Operator: EREC/Balcron
BOD WI: 79.78%
Location: SW SW Section 12, T9S, R16E
Duchesne County, Utah
Prospect: Jonah Unit/Monument Butte

No report at report time.

BALCRON MONUMENT FEDERAL #31-7J
---TIGHT HOLE---

Operator: EREC/Balcron
BOD WI: 79.78%
Location: NW NE Section 7, T9S, R17E
Duchesne County, Utah
Prospect: Jonah Unit/Monument Butte Field

No report at report time.

Balcron Oil
DAILY OPERATING REPORT

DATE: 12/10/93

****JONAH UNIT PARTNERS' DAILY REPORT****

BALCRON MONUMENT FEDERAL #12-12J
Operator: EREC/Balcron
BOD WI: 79.78%
Location: SW NW Section 12, T9S, R16E
Duchesne County, Utah
Prospect: Jonah Unit / Monument Butte

---TIGHT HOLE---

12-9-93 Completion
Start unit pumping, 5 SPM, 86" stroke length. Beam pump, Bethleham C-320-212-86 unit, S/N 30617E-31 3665. Engine - Ajax model E-42 S/N 68203.
DC: $33,790

BALCRON MONUMENT FEDERAL #24-12J
Operator: EREC/Balcron
BOD WI: 79.78%
Location: SE SW Section 12, T9S, R16E
Duchesne County, Utah
Prospect: Jonah Unit / Monument Butte

---TIGHT HOLE---

12-10-93 TD: 5,700' (0') Day 7
Formation: Green River
Present Operation: RDMO
WO float collar, run 5-1/2" csg, cmt by Western as follows:

Guide shoe	.60'
1 jt 5-1/2" 15.5# shoe jt	44.18'
float collar	2.10'
128 jts 5-1/2" 15.5# K-55 csg	5629.34'
	5676.22'
Landing jt	9.00'
Csg set @	5685.22'
PBTD	5636.34'

20 centralizers
Cmt by Western with 204 sxs Thrifty lite & tail w/215 sxs 50-50 POZ. Plug down @ 1:30 p.m. 12-9-93. Release rig @ 5:30 p.m. 12-9-93. Set slips, ND BOP, & clean mud tank.
DC: $48,035 CC: $168,393

BALCRON MONUMENT FEDERAL #14-12J
Operator: EREC/Balcron
BOD WI: 79.78%
Location: SW SW Section 12, T9S, R16E
Duchesne County, Utah
Prospect: Jonah Unit/Monument Butte

---TIGHT HOLE---

12-9-93 Completion
CP - 10 psi. RU Halliburton to frac 4299'-4308' & 4097'-4104' w/sand & tracer **refer to treatment report.** Shut down on pad, high pressure, call for 500 gallons HCL. Start acid followed by pad **refer to treatment report.** SWIFN. RD Halliburton.
DC: $6,037

EQUITABLE RESOURCES
ENERGY COMPANY
BALCRON OIL DIVISION

1601 Lewis Avenue
P.O. Box 21017
Billings, MT 59104

Office: (406) 259-7860
FAX: (406) 245-1365
FAX: (406) 245-1361

December 10, 1993

Bureau of Land Management
170 South 500 East
Vernal, UT 84078

Gentlemen:

RE: Balcron Monument Federal #24-12J
SE SW Section 12, T9S, R16E
Duchesne County, Utah

Enclosed is our sundry reporting a change in rig for the subject well.

Please feel free to contact me if you need any additional information.

Sincerely,

Molly Conrad

Molly M. Conrad
Operations Secretary

/mc

Enclosures

cc: State of Utah, Division of Oil, Gas, & Mining

Form 3160-5
(June 1990)

UNITED STATES
DEPARTMENT OF THE INTERIOR
BUREAU OF LAND MANAGEMENT

FORM APPROVED
Budget Bureau No. 1004-0135
Expires: March 31, 1993

SUNDRY NOTICES AND REPORTS ON WELLS

Do not use this form for proposals to drill or to deepen or reentry to a different reservoir.
Use "APPLICATION FOR PERMIT—" for such proposals

SUBMIT IN TRIPLICATE

5. Lease Designation and Serial No.: U-035521-A

6. If Indian, Allottee or Tribe Name: n/a

7. If Unit or CA, Agreement Designation: Jonah Unit

1. Type of Well: [X] Oil Well [ ] Gas Well [ ] Other

8. Well Name and No.: Balcron Monument Federal #24-12J

2. Name of Operator: Equitable Resources Energy Company, Balcron Oil Division

9. API Well No.: 43-013-31409

3. Address and Telephone No.: P.O. Box 21017, Billings, MT 59104 (406) 259-7860

10. Field and Pool, or Exploratory Area: Monument Butte / Green River

4. Location of Well (Footage, Sec., T., R., M., or Survey Description)
SE SW Section 12, T9S, R16E
539' FSL, 1777' FWL

11. County or Parish, State: Duchesne County, Utah

12. CHECK APPROPRIATE BOX(s) TO INDICATE NATURE OF NOTICE, REPORT, OR OTHER DATA

TYPE OF SUBMISSION	TYPE OF ACTION	
[X] Notice of Intent	[ ] Abandonment	[ ] Change of Plans
[X] Subsequent Report	[ ] Recompletion	[ ] New Construction
[ ] Final Abandonment Notice	[ ] Plugging Back	[ ] Non-Routine Fracturing
	[ ] Casing Repair	[ ] Water Shut-Off
	[ ] Altering Casing	[ ] Conversion to Injection
	[X] Other Change in rig	[ ] Dispose Water

(Note: Report results of multiple completion on Well Completion or Recompletion Report and Log form.)

13. Describe Proposed or Completed Operations (Clearly state all pertinent details, and give pertinent dates, including estimated date of starting any proposed work. If well is directionally drilled, give subsurface locations and measured and true vertical depths for all markers and zones pertinent to this work.)*

Operator will be using a completion rig to complete this well.

RECEIVED
DEC 13 1993
DIVISION OF
OIL, GAS & MINING

14. I hereby certify that the foregoing is true and correct
Signed Bobbie Schuman (Bobbie Schuman) Title Coordinator of Environmental and Regulatory Affairs Date 12-10-93

(This space for Federal or State office use)

Approved by _____ Title _____ Date _____
Conditions of approval, if any:

Title 18 U.S.C. Section 1001, makes it a crime for any person knowingly and willfully to make to any department or agency of the United States any false, fictitious or fraudulent statements or representations as to any matter within its jurisdiction.

*See Instruction on Reverse Side

KTECH

WELL SITE GEOLOGY
WELL LOGGING
CONSULTING

CONFIDENTIAL

Final Report

BALCRON OIL 43-013-31409
BALCRON MONUMENT FEDERAL #24-12-J
(SE/SW) SECTION 12, T9S, R16E
DUCHESNE COUNTY, UTAH

MICROFICHE

2913 HERMOSA CT. • GRAND JUNCTION, COLORADO 81504 • (303) 241-9351

KTECH

GEOLOGY, MUD LOGGING
CONSULTING

December 8, 1993

Steve VanDelinder
Balcron Oil
P.O. Box 21017
Billings, MT 59104

Mr. VanDelinder:

Enclosed is the final log for your BALCRON MONUMENT FEDERAL #24-12-J well, located in Section 12, T19S, R16E of Duchesne Co., Utah.

I appreciated the opportunity to serve you. If I can be of any further assistance in the final evaluation of the Green River sands encountered, please feel free to call me.

It would be a pleasure to work with you in the future.

Respectfully

John Kuykendall

2913 Hermosa Ct. · Grand Junction, Colorado 81504 · (303) 241-9351

DEVIATION SURVEYS

WELL NAME BALCRON MONUMENT FEDERAL #24-12-J

COMPANY BALCRON OIL

CONTRACTOR UNION DRLG. INC. #17

SPUD DATE 12/3/93

ELEVATION 5495' GL (ung) - 5505' KB

SECTION 12, T9S, R16E

LOCATION DUCHESNE COUNTY, UTAH

TD DATE 12/8/93

DEPTH	DEV.	DEPTH	DEV.	DATE	DEPTH	FOOTAGE	DATE	DEPTH	FOOTAGE
1800'	3/4°			12/4/93	581'	1309'			
2300'	2°			12/5/93	1890'	1377'			
2800'	2°			12/6/93	3267'	1155'			
3800'	2°			12/7/93	4422'	1018'			
4300'	3°			12/8/93	5440'	260'			
4800'	2½°								
5050'	3°								

BIT RECORD

WELL NAME BALCRON MONUMENT FEDERAL #24-12-J

COMPANY BALCRON OIL

CONTRACTOR UNION DRLG. INC. #17

SPUD DATE 12/3/93

ELEVATION 5495' GL (ung) - 5505' KB

SECTION 12, T9S, R16E

LOCATION DUCHESNE COUNTY, UTAH

TD DATE 12/8/93

BIT #	SIZE	MAKE	TYPE	DEPTH IN	DEPTH OUT	FOOTAGE	HOURS	FT/HR
NB #1	7 7/8"	STC	F-47A	286'	5700'	5414'	61.50	88.0

K/J KTECH
WELL SITE GEOLOGY - MUD LOGGING
2913 HERMOSA CT., GRAND JUNCTION, COLORADO 81504
MAILING ADDRESS: P.O. BOX 590, CLIFTON, COLORADO 81520 • (303) 241-9351

COMPANY BALCRON OIL

WELL NO. BALCRON MONUMENT FEDERAL #24-12-J

LOCATION 539' FSL, 1777' FWL, (SE/SW), SECTION 12, T9S, R16E, DUCHESNE Co., UTAH.

ZONE OF INTEREST 1 **FORMATION** GREEN RIVER

INTERVAL: FROM 2647' TO 2657'

DRILL RATE: ABV 1.2 MIN/FT THRU 1.3 MIN/FT BELOW 1.1 MIN/FT

MUD GAS-CHROMATOGRAPH

	TOTAL	C1	C2	C3	C4	C5	OTHER
BEFORE	30	70	9	2	tr		
DURING	600	1600	170	25	6		
AFTER	510	1100	110	22	5		

TYPE GAS INCREASE: GRADUAL ☐ SHARP ☒ HOLE CONDITIONS: WASHED ☐ FAIR ☐ IN GUAGE ☒

GAS VARIATION WITHIN ZONE: STEADY ☒ ERRATIC ☐ INCREASING ☐ DECREASING ☐

FLUO: MINERAL ☐ NONE ☒ POOR ☐ FAIR ☐ GOOD ☐ EVEN ☐ SPOTTY ☐

FLUO COLOR: _____ % IN SHOW LITHOLOGY _____

CUT: NONE ☒ CRUSH ☐ POOR ☐ FAIR ☐ GOOD ☐ **STREAMING:** SLOW ☐ MOD ☐ FAST ☐

CUT COLOR: _____

STAIN: NONE ☒ POOR ☐ FAIR ☐ LIVE ☐ DEAD ☐ RESIDUE ☐ EVEN ☐ SPOTTY ☐ LT ☐ DK ☐

POROSITY: POOR ☒ FAIR ☐ GOOD ☐ KIND INTERGRANULAR, FAIR IP

LITHOLOGY SS lt-mgy,tr s&p,glsy,fgr,mgr ip,ang-rnd,calc,fri-frm,tt

SAMPLE QUALITY FAIR

REMARKS NSOFC. RELATED GAS INCREASE FROM 2675' TO 2705', 1.3 MIN/FT, .6 MIN/FT - 1.0 MIN/FT, 510u-690u-630u

SS vf-fgr,occ mgr,uncon,SL YEL FLUOR GOOD STRMG CUT. HOLE MAKING A LITTLE OIL.

NOTIFIED DENNIS REHRIG @ 12:30 **HRS. DATE** 12/5/93

ZONE DESCRIBED BY JOHN KUYKENDALL

K/J **KTECH**
WELL SITE GEOLOGY - MUD LOGGING
2913 HERMOSA CT., GRAND JUNCTION, COLORADO 81504
MAILING ADDRESS: P.O. BOX 590, CLIFTON, COLORADO 81520 • (303) 241-9351

COMPANY BALCRON OIL

WELL NO. BALCRON MONUMENT FEDERAL #24-12-J

LOCATION 539' FSL, 1777' FWL, (SE/SW), SECTION 12, T9S, R16E, DUCHESNE Co., UTAH.

ZONE OF INTEREST 2 **FORMATION** GREEN RIVER

INTERVAL: FROM 3530' TO 3540'

DRILL RATE: ABV .8 MIN/FT THRU .4 MIN/FT BELOW .7 MIN/FT

MUD GAS-CHROMATOGRAPH

	TOTAL	C1	C2	C3	C4	C5	OTHER
BEFORE	710	1470	90	22	5		
DURING	930	1860	100	27	6		
AFTER	640	1380	90	22	5		

TYPE GAS INCREASE: GRADUAL ☐ SHARP ☒ HOLE CONDITIONS: WASHED ☐ FAIR ☐ IN GUAGE ☒

GAS VARIATION WITHIN ZONE: STEADY ☒ ERRATIC ☐ INCREASING ☐ DECREASING ☐

FLUO: MINERAL ☐ NONE ☐ POOR ☒ FAIR ☐ GOOD ☐ EVEN ☒ SPOTTY ☐

FLUO COLOR: VDULL YEL % IN SHOW LITHOLOGY TR

CUT: NONE ☐ CRUSH ☐ POOR ☐ FAIR ☒ GOOD ☐ **STREAMING:** SLOW ☐ MOD ☐ FAST ☒

CUT COLOR: YEL

STAIN: NONE ☐ POOR ☒ FAIR ☐ LIVE ☒ DEAD ☐ RESIDUE ☐ EVEN ☐ SPOTTY ☒ LT ☒ DK ☐

POROSITY: POOR ☐ FAIR ☐ GOOD ☒ KIND INTERGRANULAR, FAIR - GOOD

LITHOLOGY SS clr,ltgy,vf-mgr,sbang-rnd,calc,fri-frm & uncon

SAMPLE QUALITY GOOD

REMARKS TR MBRN SPOTTY STN, TR VDULL YEL FLUOR, FAIR FAST STRM CUT IP, FAST STRM CUT DRY.

NOTIFIED DENNIS REHRIG @ 06:30 **HRS. DATE** 12/6/93

ZONE DESCRIBED BY JOHN KUYKENDALL

K/J **KTECH**
WELL SITE GEOLOGY - MUD LOGGING
2913 HERMOSA CT., GRAND JUNCTION, COLORADO 81504
MAILING ADDRESS: P.O. BOX 590, CLIFTON, COLORADO 81520 • (303) 241-9351

COMPANY BALCRON OIL

WELL NO. BALCRON MONUMENT FEDERAL #24-12-J

LOCATION 539' FSL, 1777' FWL, (SE/SW), SECTION 12, T9S, R16E, DUCHESNE Co., UTAH.

ZONE OF INTEREST 3 **FORMATION** GREEN RIVER Y-3

INTERVAL: FROM 4106' TO 4120'

DRILL RATE: ABV 1 MIN/FT THRU .5 MIN/FT BELOW 1 MIN/FT

MUD GAS-CHROMATOGRAPH

	TOTAL	C1	C2	C3	C4	C5	OTHER
BEFORE	380	600	60	15	5		
DURING	380	600	60	15	5		
AFTER	380	600	60	15	5		

TYPE GAS INCREASE: GRADUAL ☐ SHARP ☐ HOLE CONDITIONS: WASHED ☐ FAIR ☐ IN GUAGE ☒

GAS VARIATION WITHIN ZONE: STEADY ☒ ERRATIC ☐ INCREASING ☐ DECREASING ☐

FLUO: MINERAL ☐ NONE ☐ POOR ☒ FAIR ☐ GOOD ☐ EVEN ☒ SPOTTY ☐

FLUO COLOR: DULL YEL % IN SHOW LITHOLOGY 50%

CUT: NONE ☐ CRUSH ☐ POOR ☐ FAIR ☐ GOOD ☒ **STREAMING:** SLOW ☐ MOD ☐ FAST ☒

CUT COLOR: YEL

STAIN: NONE ☐ POOR ☐ FAIR ☒ LIVE ☒ DEAD ☐ RESIDUE ☐ EVEN ☒ SPOTTY ☐ LT ☐ DK ☒

POROSITY: POOR ☐ FAIR ☒ GOOD ☐ KIND INTERGRANULAR

LITHOLOGY SS qtz,ltbrn-brn,clr,trns,g stn,sbang-sbrnd,calc

SAMPLE QUALITY GOOD

REMARKS 50% DULL YEL FLUOR, LTBRN-BRN STN, GOOD FAST STRM CUT, GAS INCREASE PROBABLY MASKED BY GAS SAND FROM ABOVE.

NOTIFIED DENNIS REHRIG @ 16:00 **HRS. DATE** 12/6/93

ZONE DESCRIBED BY JOHN KUYKENDALL

K/J KTECH
WELL SITE GEOLOGY - MUD LOGGING
2913 HERMOSA CT., GRAND JUNCTION, COLORADO 81504
MAILING ADDRESS: P.O. BOX 590, CLIFTON, COLORADO 81520 • (303) 241-9351

COMPANY BALCRON OIL

WELL NO. BALCRON MONUMENT FEDERAL #24-12-J

LOCATION 539' FSL, 1777' FWL, (SE/SW), SECTION 12, T9S, R16E, DUCHESNE Co., UTAH.

ZONE OF INTEREST 4 **FORMATION** GREEN RIVER Y-5

INTERVAL: FROM 4306' TO 4332'

DRILL RATE: ABV 1.3 MIN/FT THRU .7 MIN/FT BELOW 1.5 MIN/FT

MUD GAS-CHROMATOGRAPH

	TOTAL	C1	C2	C3	C4	C5	OTHER
BEFORE	350	400	50	10	3		
DURING	350	400	50	10	3		
AFTER	350	400	50	10	3		

TYPE GAS INCREASE: GRADUAL ☐ SHARP ☐ HOLE CONDITIONS: WASHED ☐ FAIR ☐ IN GUAGE ☒

GAS VARIATION WITHIN ZONE: STEADY ☒ ERRATIC ☐ INCREASING ☐ DECREASING ☐

FLUO: MINERAL ☐ NONE ☐ POOR ☒ FAIR ☐ GOOD ☐ EVEN ☒ SPOTTY ☐

FLUO COLOR: DULL YEL % IN SHOW LITHOLOGY 20%

CUT: NONE ☐ CRUSH ☐ POOR ☐ FAIR ☐ GOOD ☒ **STREAMING:** SLOW ☐ MOD ☐ FAST ☒

CUT COLOR: BRI YEL

STAIN: NONE ☐ POOR ☒ FAIR ☐ LIVE ☒ DEAD ☐ RESIDUE ☐ EVEN ☒ SPOTTY ☐ LT ☐ DK ☒

POROSITY: POOR ☐ FAIR ☒ GOOD ☐ KIND INTERGRANULAR

LITHOLOGY SS qtz,clr,wh,vf-fgr,wsrtd,m-pcmt,fri,sbrnd-sbang,sl ltbrn stn ip

SAMPLE QUALITY GOOD

REMARKS 20% DULL YEL FLUOR, GOOD FAST STRM CUT, LTBRN STN IP. GAS INCREASE MAY HAVE BEEN MASKED BY GAS SAND ABOVE.

NOTIFIED DENNIS REHRIG @ 20:00 **HRS. DATE** 12/6/93

ZONE DESCRIBED BY GEORGE NICHOLS

KTECH
WELL SITE GEOLOGY - MUD LOGGING
2913 HERMOSA CT., GRAND JUNCTION, COLORADO 81504
MAILING ADDRESS: P.O. BOX 590, CLIFTON, COLORADO 81520 • (303) 241-9351

COMPANY BALCRON OIL

WELL NO. BALCRON MONUMENT FEDERAL #24-12-J

LOCATION 539' FSL, 1777' FWL, (SE/SW), SECTION 12, T9S, R16E, DUCHESNE Co., UTAH.

ZONE OF INTEREST 5 **FORMATION** GREEN RIVER R-5

INTERVAL: FROM 4724' **TO** 4736'

DRILL RATE: ABV 1.6 MIN/FT **THRU** .6 MIN/FT **BELOW** 1.1 MIN/FT

MUD GAS-CHROMATOGRAPH

	TOTAL	C1	C2	C3	C4	C5	OTHER
BEFORE	360	530	45	10	2		
DURING	410	660	50	12	4		
AFTER	360	530	45	10	2		

TYPE GAS INCREASE: GRADUAL ☒ SHARP ☐ HOLE CONDITIONS: WASHED ☐ FAIR ☐ IN GUAGE ☒

GAS VARIATION WITHIN ZONE: STEADY ☒ ERRATIC ☐ INCREASING ☐ DECREASING ☐

FLUO: MINERAL ☐ NONE ☐ POOR ☐ FAIR ☐ GOOD ☐ EVEN ☒ SPOTTY ☐

FLUO COLOR: VDULL YEL % IN SHOW LITHOLOGY 100%

CUT: NONE ☐ CRUSH ☐ POOR ☐ FAIR ☐ GOOD ☒ **STREAMING:** SLOW ☐ MOD ☐ FAST ☒

CUT COLOR: YEL

STAIN: NONE ☐ POOR ☐ FAIR ☒ LIVE ☒ DEAD ☐ RESIDUE ☐ EVEN ☒ SPOTTY ☐ LT ☐ DK ☒

POROSITY: POOR ☐ FAIR ☒ GOOD ☐ KIND INTERGRANULAR, FAIR - GOOD

LITHOLOGY SS lt-dkbrn stn,vfgr,slty ip,calc,fri

SAMPLE QUALITY GOOD

REMARKS LT-DKBRN STN,VDULL YEL FLUOR, GOOD FAST STRM CUT. ASSOC OIL SHOW FROM 4761' TO 4772':

LT-DKBRN OIL STN,VDULL YEL FLUOR, FAIR FAST STRM CUT.

NOTIFIED DENNIS REHRIG @ 07:00 **HRS. DATE** 12/7/93

ZONE DESCRIBED BY JOHN KUYKENDALL

K/J **KTECH**
WELL SITE GEOLOGY - MUD LOGGING
2913 HERMOSA CT., GRAND JUNCTION, COLORADO 81504
MAILING ADDRESS: P.O. BOX 590, CLIFTON, COLORADO 81520 • (303) 241-9351

COMPANY BALCRON OIL

WELL NO. BALCRON MONUMENT FEDERAL #24-12-J

LOCATION 539' FSL, 1777' FWL, (SE/SW), SECTION 12, T9S, R16E, DUCHESNE Co., UTAH.

ZONE OF INTEREST 6 **FORMATION** GREEN RIVER B-1

INTERVAL: FROM 5462' TO 5483'

DRILL RATE: ABV 1.0 MIN/FT THRU .7 MIN/FT BELOW .8 MIN/FT

MUD GAS-CHROMATOGRAPH

	TOTAL	C1	C2	C3	C4	C5	OTHER
BEFORE	200	600	25	9	2		
DURING	160	260	22	6	1		
AFTER	180	510	25	9	2		

TYPE GAS INCREASE: GRADUAL ☒ SHARP ☐ HOLE CONDITIONS: WASHED ☐ FAIR ☐ IN GUAGE ☒

GAS VARIATION WITHIN ZONE: STEADY ☐ ERRATIC ☒ INCREASING ☐ DECREASING ☒

FLUO: MINERAL ☐ NONE ☐ POOR ☐ FAIR ☒ GOOD ☐ EVEN ☒ SPOTTY ☐

FLUO COLOR: DULL YEL % IN SHOW LITHOLOGY 100%

CUT: NONE ☐ CRUSH ☐ POOR ☐ FAIR ☐ GOOD ☒ **STREAMING:** SLOW ☐ MOD ☐ FAST ☒

CUT COLOR: YEL

STAIN: NONE ☐ POOR ☐ FAIR ☒ LIVE ☒ DEAD ☐ RESIDUE ☐ EVEN ☐ SPOTTY ☒ LT ☐ DK ☒

POROSITY: POOR ☐ FAIR ☐ GOOD ☒ KIND INTERGRANULAR

LITHOLOGY SS clr,ltgy,vf-fgr,sbang-rnd,uncon & calc,fri

SAMPLE QUALITY GOOD

REMARKS DKBRN SPOTTY STN, 100% DULL YEL FLUOR, GOOD FAST STRM CUT. GAS ERRATIC DUE TO HOLE LOADING DECREASE DUE TO THIS.

NOTIFIED DENNIS REHRIG @ 07:00 **HRS. DATE** 12/8/93

ZONE DESCRIBED BY JOHN KUYKENDALL

KTECH

WELL SITE GEOLOGY - MUD LOGGING

2913 HERMOSA CT., GRAND JUNCTION, CO 81504 ● (303) 241-9351

COMPANY BALCRON OIL conf

43-013-31409 drl

WELL BALCRON MONUMENT FEDERAL #24-12-J

FIELD JONAH UNIT

LOCATION 539' FSL, 1777' FWL, (SE/SW) SECTION 12, T9S, R16E

COUNTY DUCHESNE

STATE UTAH

ELEVATION 5495' GL (ung) - 5505' KB DRILLING FLUID AIR MIST, SURFACE -

	FROM	TO
DEPTH LOGGED	1400'	5700'
DATE LOGGED	12/4/93	12/8/93

ENGINEERS JOHN KUYKENDALL
GEORGE NICHOLS

SHALE
SANDSTONE
LIMESTONE
DOLOMITE
CHERT
SALT
COAL
ANHY-GYP
SILTSTONE

OIL SHOW
POOR
FAIR
GOOD

CORE NO.
DST NO.

O - DEVIATION
S - SHOW REPORT

NB - NEW BIT
RR - RERUN BIT
NR - NO RETURNS
CO - CIRCULATE OUT
NS - NO SAMPLE
TG - TRIP GAS
CG - CONNECTION GAS
DTG - DOWN TIME GAS
LAT - LAGGED AFTER TRIP

DRILLING RATE IN MIN/FT □ MIN/2 FT □ MIN/5 FT □

LITHOLOGY: INTERPRETIVE | DEPTH | PERCENTAGE

OIL SHOW P F G | PORO P F G

TOTAL GAS & CHROMATOGRAPH HYDROCARBONS IN UNITS
TOTAL GAS —— METHANE - - - ETHANE —— PROPANE - - - BUTANE -·-·- PENTANE·····

1400

LITHOLOGY DESCRIPTION AND REMARKS

WT VIS WL PH CKE

LOGGING UNIT #1 ON LOCATION, RIGGED UP & LOGGING 12/4/93

SS qtz,ltgy-gy,wh,vf-mgr,wsrtd, m-wcmt,vcalc,sbang-sbrnd,hd,occ grdg to vlmy sltst

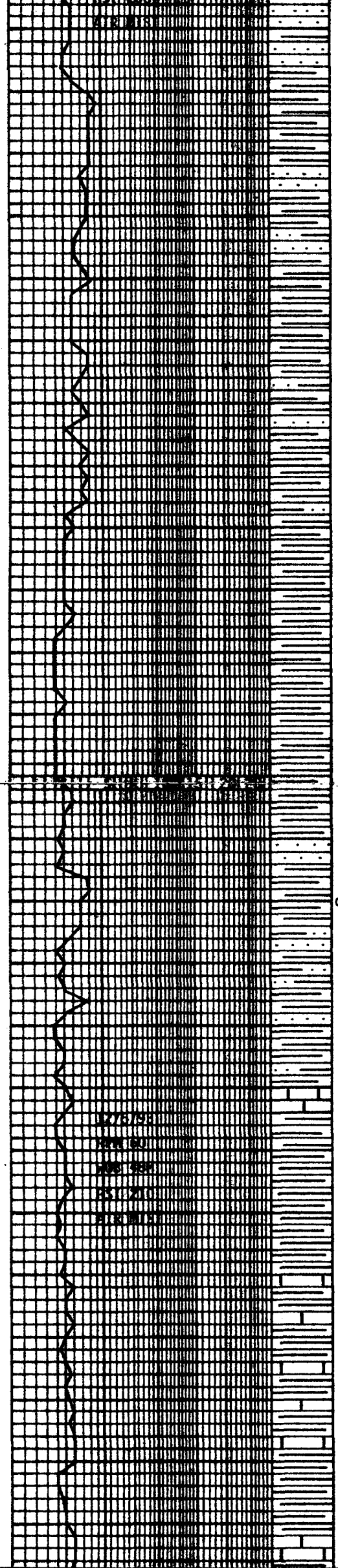

50
1500
50
1600
50
1700
50
1800
1900
50
2000
50

LS brn-rdbrn,crm,micxln,hd

SH ltgy-gybrn,lmy,mhd-hd,calc

SS qtz,ltgy-gy,wh,vf-mg,wsrtd,
m-wcmnt,vcalc,sbang-sbrnd,hd,occ
grdg to vlmy slst

SH ltbrn-brn,mrly,grdg to mrlst
lmy ip,calc,mhd-hd,DUL YEL FLUOR
NO CUT

SH ltbrn-brn,mrly,grdg to mrlst,
lmy ip,calc,mhd-hd,incr lmy,DUL
YEL FLUOR,NO CUT

SH ltbrn-brn,gydg to mrlst,mhd,
vcalc,tr vfg ss,DUL YEL FLOUR,
NO CUT

SH ltbrn-brn,gybrn-gy,sbplty-
plty,brit-mhd,grdg to mrlst,calc
DUL YEL FLOUR, NO CUT

SH ltbrn-brn,gybrn-gy,sbplty-
plty,mhd-hd,grdg to mrlst,calc
tr pyr,DUL YEL FLOUR, NO CUT

SH ltbrn-brn,splnty-plty,occ
sb blky,grdg to mrlst,calc
tr SS vfgr,lmy

SH ltbrn-brn,splnty-plty,occ sb
blky,grdg to marly ls,
SS qtz,gybrn,wh,vf-fgr,wsrtd,
mhd,sbang-sbrnd,calc

SH ltbrn-brn,splnty-plty,grdg
to marly ls

LS crm,ltbrn,mic-cryptxln,slty
ip,DULL YELL FLUOR, NO CUT

SH brn,ltbrn,gybrn,grdg to lmy
mrlst,plty-sbblky,m hd,vcalc,
DULL YEL FLUOR, NO CUT
tr LS, SS

SH lt-mbrn,mrdbrn,glsy,crypt-
micxln,lmy,blky,frm-hd,grdg to
mrlst,DULL YEL FLUOR, NO CUT
LS mrdbrn,glsy,arg,crypt-micxln
blky,frm-hd

SH lt-mbrn,glsy ip,micxln,tr
pyr spcs,calc,blky,frm-hd,grdg
to mrlst

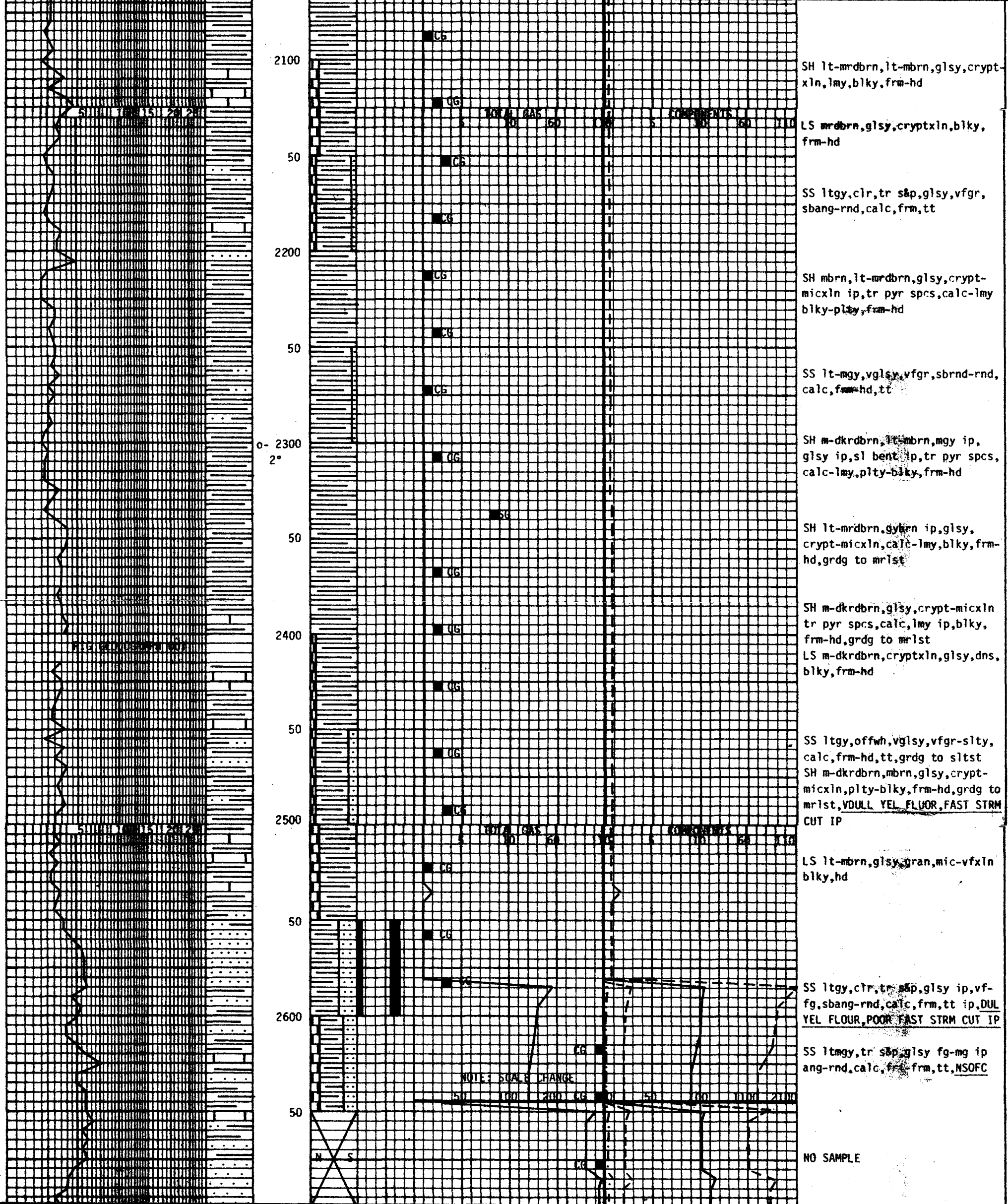

SH lt-mrdbrn,lt-mbrn,glsy,crypt-xln,lmy,blky,frm-hd

LS mrdbrn,glsy,cryptxln,blky, frm-hd

SS ltgy,clr,tr s&p,glsy,vfgr, sbang-rnd,calc,frm,tt

SH mbrn,lt-mrdbrn,glsy,crypt-micxln ip,tr pyr spcs,calc-lmy blky-plty,frm-hd

SS lt-mgy,vglsy,vfgr,sbrnd-rnd, calc,frm-hd,tt

SH m-dkrdbrn,lt-mbrn,mgy ip, glsy ip,sl bent ip,tr pyr spcs, calc-lmy,plty-blky,frm-hd

SH lt-mrdbrn,gybrn ip,glsy, crypt-micxln,calc-lmy,blky,frm-hd,grdg to mrlst

SH m-dkrdbrn,glsy,crypt-micxln tr pyr spcs,calc,lmy ip,blky, frm-hd,grdg to mrlst
LS m-dkrdbrn,cryptxln,glsy,dns, blky,frm-hd

SS ltgy,offwh,vglsy,vfgr-slty, calc,frm-hd,tt,grdg to sltst
SH m-dkrdbrn,mbrn,glsy,crypt-micxln,plty-blky,frm-hd,grdg to mrlst,VDULL YEL FLUOR,FAST STRM CUT IP

LS lt-mbrn,glsy,gran,mic-vfxln blky,hd

SS ltgy,clr,tr s&p,glsy ip,vf-fg,sbang-rnd,calc,frm,tt ip,DUL YEL FLOUR,POOR FAST STRM CUT IP

SS ltmgy,tr s&p,glsy fg-mg ip ang-rnd,calc,frm-frm,tt,NSOFC

NO SAMPLE

2700

50

0- 2800
2°

50

2900

50

3000

50

3100

50

3200

50

3300

SS qtz,clr,wh,vf-fg,occ mg, unconsl,sbang-sbrnd,pcmnt,sl calc,sl stn,SL YEL FLOUR,GOOD STRMG CUT
HOLE MAKING A LITTLE OIL

SS aa,occ chlor,tr ltbrn-brn mrly sh w/DUL YEL FLOUR,FAIR STRMG CUT

SH brn-dkbrn,sbplty-sbblky,mhd -brit,calc,DULL YEL FLOUR,POOR FAST STRMG CUT

SS clr,wh,trnsl,occ vltbrn stn, vf-fg,wsrtd,pcmnt,calc,SL YEL FLOUR,GOOD BRI YEL FLASH CUT
SH gygrn,gy-dkgy,sbblky,blky, slty,mhd,calc

SLTST gybrn,gy,sbblky,sndy ip, occ grdg to vfg ss,calc

LS ltbrn,crm,ltgy,micxln,slty ip,vcalc,DULL YEL FLOUR,NO CUT

SH dkbrn-brn,occ ltbrn,plty-sbblky,slty ip,grdg to mrlst,calc DUL YEL FLOUR,SL CUT

LS ltbrn-crm,micxln-occ crypxln v calc,hd,tr vfgss,YEL FLOUR,SL STRMNG CUT

SH ltgy-gy,sbblky,slty ip,sft-mhd,calc,occ grdg to sltst

SS qtz,wh,clr,vfg,wsrtd,p-mcmt sbang-sbrnd,calc

SH ltbrn,brn,occ dkbrn,com grdg to mrlst,com oil stn,calc,lmy occ grdg to LS,YELL FLOUR,FAIR STRMNG CUT

LS wh,crm,micxln,occ crypxln,mhd occ sft,DULL YEL FLOUR,FAIR STRMNG CUT

SH ltbrn-brn,ltgy-gy,crm,plty, -sbblky,calc,com oil stn,slty, mhd-brit,grdg to mrlst,YEL FLOUR FAIR STRMNG CUT

LS crm,wh,micxln,occ cryptxln, m hd,calc,DULL YEL FLUOR, POOR FAST STRM CUT

SH mbrn,mgy,sl bent,sl glsy,tr pyr spcs,calc,blky-plty,frm-hd

LS ltcrm-ltrdcrm,mic-vfxln,arg, blky,sft-frm,DULL YEL FLUOR, TR FAIR FAST STRM CUT

LS ltcrm,offwh,micxln,plty-blky, sft-frm,DULL YEL FLUOR,STN

SLTST ltgy,clr,mgy ip,glsy,calc fri-frm,tt,sm grdg to vfgr ss

SH lt-mgy,ltgrngy,ltbrn,sl bent tr pyr spcs,calc,plty-blky,frm

LS ltrdcrm,clas ip,mic-vfxln, blky,frm-hd,DULL YEL FLUOR,STN

SS ltgy,clr,glsy,tr s&p,vfgr, sbang-rnd,calc,fri-frm,tt,grdg to sltst ip

SS clr,ltgy,vf-mgr,sbang-rnd, calc,fri-frm & uncon,TR MBRN SPOTTY STN,VDULL YEL FLUOR,FAIR FAST STRM CUT IP

HOLE LOADED UP, WHEN UNLOADING OIL CLUMPS TO SURFACE

LS ltrdcrm,ltcrm,mic-cryptxln, blky,sft-frm,VDULL YEL FLUOR, STN,TR FAST STRM CUT

LS ltrdcrm,ltcrm,clas ip,crypt-micxln,blky,sft-frm,VDULL YEL FLUOR, STN-TR FAST STRM CUT

SH ltgy-gy,gybrn,occ ltbrn,sb plty-plty,occ sb-blky,sl slty, calc,m hd

LS lt-mrdcrm,ltcrm,micxln,crypt xln ip,plty-blky,frm-hd

SLTST ltgy,clr,glsy,vfgr ip, calc,frm,tt

LS offwh,ltcrm,mic-vfxln,blky, frm,DULL YEL FLUOR,STN

SS ltgy,clr ip,vfgr-slty,calc, fri-frm,tt,grdg to sltst

NOTE SCALE CHANGE FROM 2"=100' TO 5"=100'

SS ltgy,mgy ip,clr ip,glsy,vfgr slty ip,sbang-rnd,calc,fri-frm, tt,TR SPOTTY BRN STN, VDULL YEL FLUOR,STN

SH ltgy-gy,gybrn,occ ltbrn,sb plty-plty,occ sb-blky,sl slty, calc,m hd

LS crm,wh,mic-cryptxln,hd,DULL

3900

20

40

60

80

4000

20

40

80

4100

20

40

SH gybrn,ltgy-gy,blgrn,grn,sb blky,slty ip,m hd,calc
SS qtz,clr,wh,vf-fgr,m-pcmt,ang-sbrnd,calc,SL LTBRN STN,DULL YEL FLUOR, FAST STRM CUT

LS crm,ltbrn,micxln,m hd,DULL YEL FLUOR, MOD STRM CUT

SH ltgy-gy,sb plty- sb blky,slty, grdg to sltst ip,calc

SS qtz,clr,wh,vfgr,ang-sbrnd, m-pcmt,calc,OCC LTBRN STN,SL FLUOR,SL CUT

SH ltgy-gy,brn,occ dkbrn,gybrn, sb blky-sb plty,m hd,calc

SH ltgy-gy,gygrn,sb blky,slty, glsy ip,m hd,calc

SS qtz,wh,clr,rr ltbrn stn,vf-fgr,m-wsrtd,p-mcmt,sbang-sbrnd, calc,SL YEL FLUOR,SL CUT

SS qtz,ltbrn-brn,clr,trnsl,sbang-sbrnd,calc,GOOD STN, SL YEL FLUOR, VGOOD STRM CUT

SH ltgy-gy,sb blky,slty,sndy ip,calc,grdg to sltst

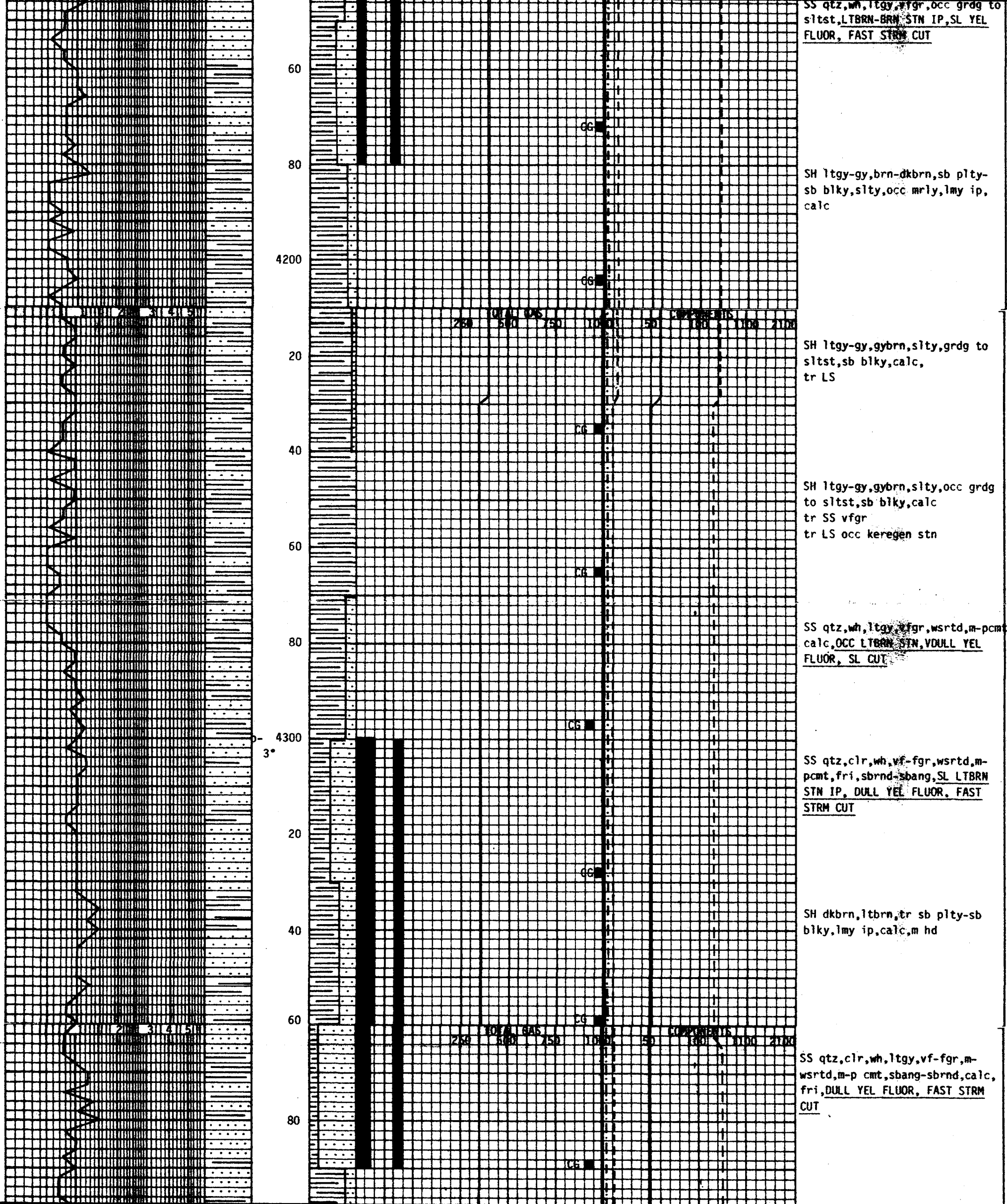

SS qtz,wh,ltgy,vfgr,occ grdg to sltst,LTBRN-BRN STN IP,SL YEL FLUOR, FAST STRM CUT

SH ltgy-gy,brn-dkbrn,sb plty-sb blky,slty,occ mrly,lmy ip, calc

SH ltgy-gy,gybrn,slty,grdg to sltst,sb blky,calc,
tr LS

SH ltgy-gy,gybrn,slty,occ grdg to sltst,sb blky,calc
tr SS vfgr
tr LS occ keregen stn

SS qtz,wh,ltgy,vfgr,wsrtd,m-pcmt calc,OCC LTBRN STN,VDULL YEL FLUOR, SL CUT

SS qtz,clr,wh,vf-fgr,wsrtd,m-pcmt,fri,sbrnd-sbang,SL LTBRN STN IP, DULL YEL FLUOR, FAST STRM CUT

SH dkbrn,ltbrn,tr sb plty-sb blky,lmy ip,calc,m hd

SS qtz,clr,wh,ltgy,vf-fgr,m-wsrtd,m-p cmt,sbang-sbrnd,calc, fri,DULL YEL FLUOR, FAST STRM CUT

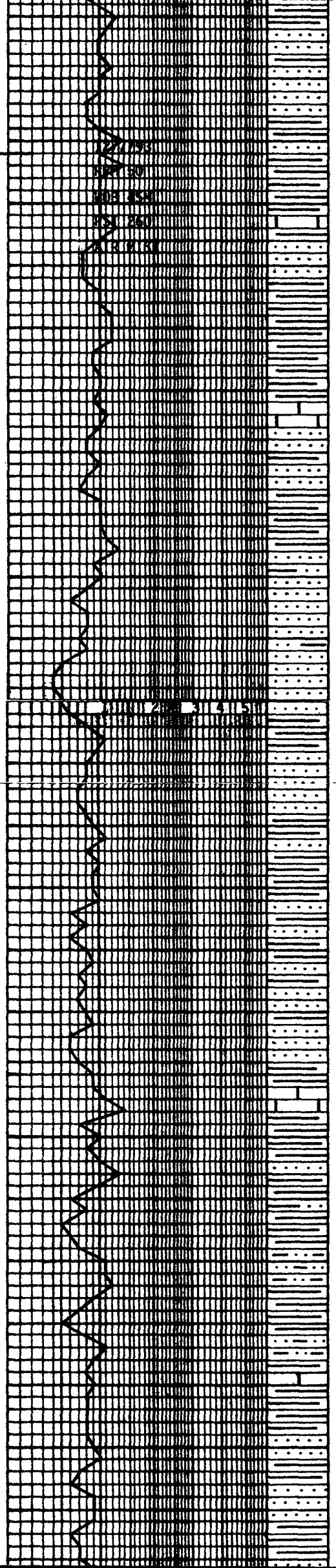

SH ltgy-gy,sbblky,slty ip,m hd-frm,calc,occ grdg to sltst

SH dkbrn-brn,ltgy-gy,carb ip, sbblky,slty ip,calc

LS crm,ltbrn,micxln,m hd

LS ltrdcrm,glsy,crypt-micxln, blky,frm-hd
SS ltgy,clr,glsy ip,vfgr-slty, sbang-rnd,calc,fri-frm,tt ip, BRN STN IP, NO FLUOR, SL CUT

SS clr,ltgy,offwh,vfgr,sbrnd-rnd,calc,fri

SS clr,ltgy,offwh,vf-fgr,sbang-rnd,calc,fri

SS ltgy,clr,sl glsy ip,vfgr-slty,calc,fri-frm,tt ip,TR LTBRN STN, VDULL YEL FLUOR,FAIR FAST STRM CUT

SH ltbrn,ltgrngy,ltgy,slty ip, tr pyr spcs,calc,plty-blky,frm

LS lt-mrdcrm,arg,crypt-micxln, plty-blky,frm

SH ltgy,ltgrngy,ltbrn,sl bent, tr pyr spcs,calc,plty-blky,frm

SLTST lt-mgy,clr ip,vfgr ip,glsy calc,fri-frm,tt,grdg to vfgr ss ip

SS lt-mgy,clr,glsy,tr s&p,vfgr, sbrnd-rnd,calc,fri-frm,tt ip

SH lt-mbrn,ltgy,sl bent,tr pyr spcs,calc,plty-blky,frm

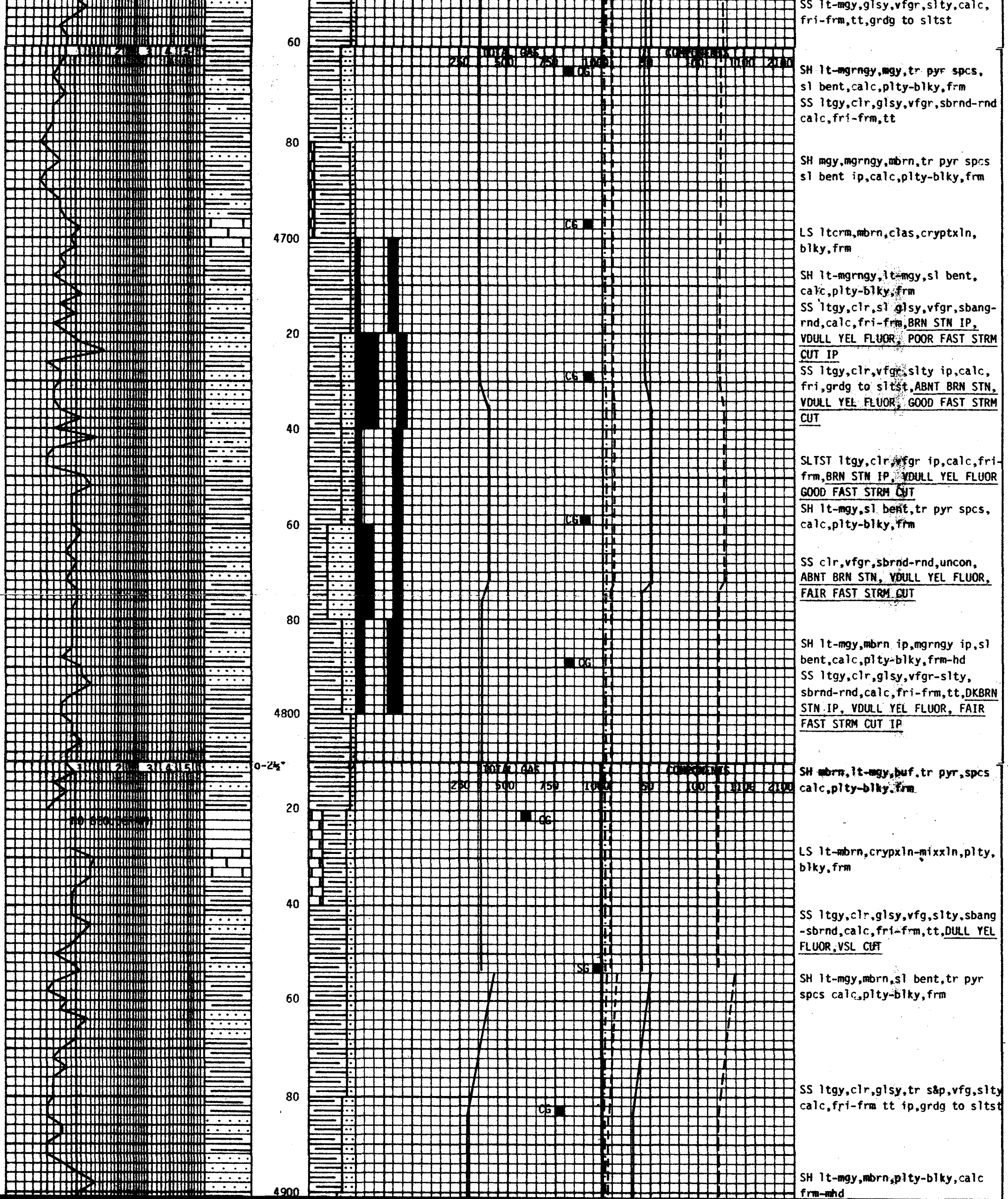

SS lt-mgy,glsy,vfgr,slty,calc, fri-frm,tt,grdg to sltst

SH lt-mgrngy,mgy,tr pyr spcs, sl bent,calc,plty-blky,frm
SS ltgy,clr,glsy,vfgr,sbrnd-rnd calc,fri-frm,tt

SH mgy,mgrngy,mbrn,tr pyr spcs sl bent ip,calc,plty-blky,frm

LS ltcrm,mbrn,clas,cryptxln, blky,frm

SH lt-mgrngy,lt-mgy,sl bent, calc,plty-blky,frm
SS ltgy,clr,sl glsy,vfgr,sbang-rnd,calc,fri-frm,BRN STN IP, VDULL YEL FLUOR, POOR FAST STRM CUT IP
SS ltgy,clr,vfgr,slty ip,calc, fri,grdg to sltst,ABNT BRN STN, VDULL YEL FLUOR, GOOD FAST STRM CUT

SLTST ltgy,clr,vfgr ip,calc,fri-frm,BRN STN IP, VDULL YEL FLUOR GOOD FAST STRM CUT
SH lt-mgy,sl bent,tr pyr spcs, calc,plty-blky,frm

SS clr,vfgr,sbrnd-rnd,uncon, ABNT BRN STN, VDULL YEL FLUOR, FAIR FAST STRM CUT

SH lt-mgy,mbrn ip,mgrngy ip,sl bent,calc,plty-blky,frm-hd
SS ltgy,clr,glsy,vfgr-slty, sbrnd-rnd,calc,fri-frm,tt,DKBRN STN IP, VDULL YEL FLUOR, FAIR FAST STRM CUT IP

SH mbrn,lt-mgy,buf,tr pyr,spcs calc,plty-blky,frm

LS lt-mbrn,crypxln-mixxln,plty, blky,frm

SS ltgy,clr,glsy,vfg,slty,sbang-sbrnd,calc,fri-frm,tt,DULL YEL FLUOR,VSL CUT

SH lt-mgy,mbrn,sl bent,tr pyr spcs calc,plty-blky,frm

SS ltgy,clr,glsy,tr s&p,vfg,slty calc,fri-frm tt ip,grdg to sltst

SH lt-mgy,mbrn,plty-blky,calc frm-hd

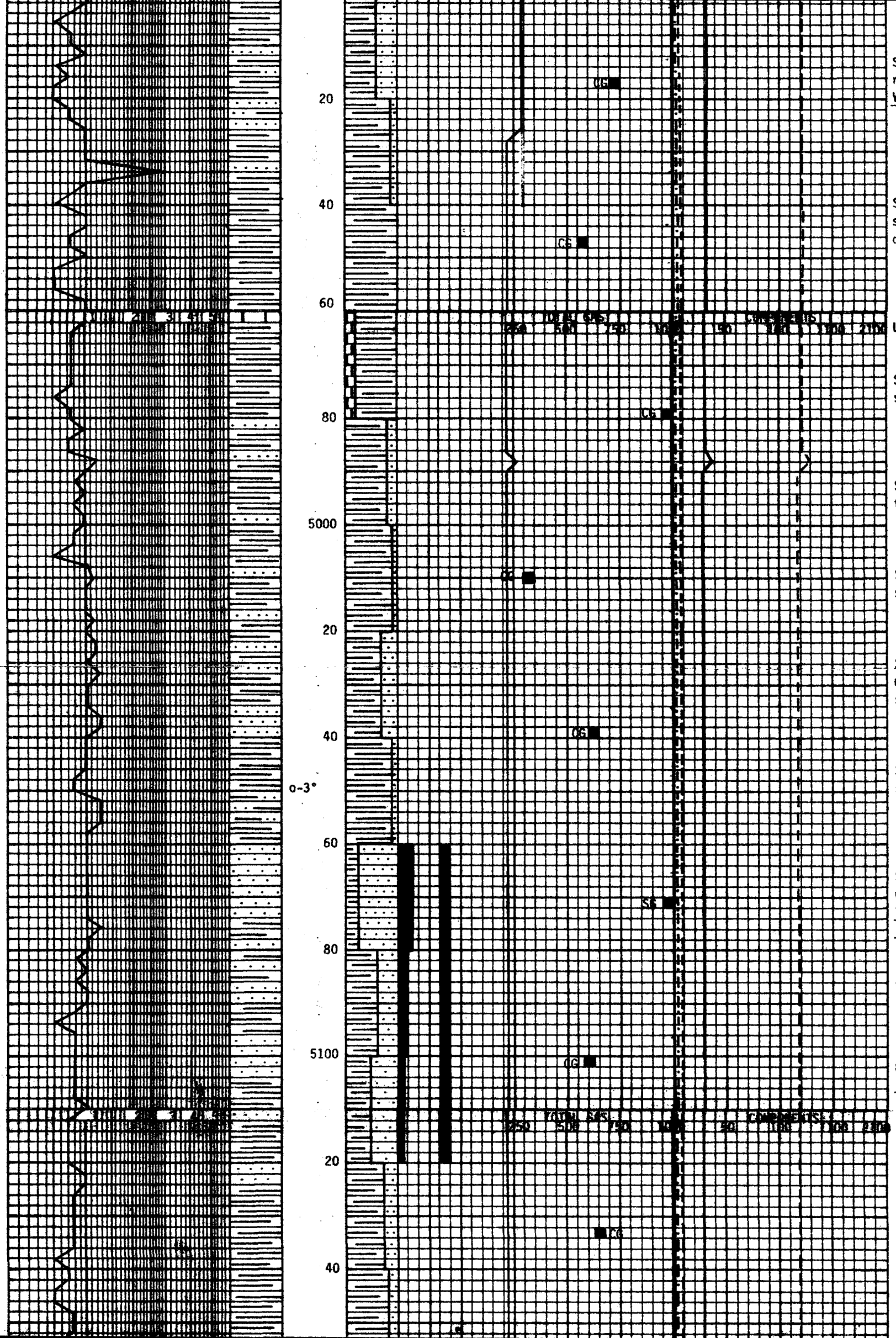

SS qtz,wh,clr,vfg,wsrtd,m-pcmnt rr ltbrn stn,RR DULL YEL FLUOR VSL FAST STRMNG CUT

SH ltgy-gy,brn-gybrn,occ dkbrn sblky-occ sbplty,slty,calc,sl carb ip

LS ltbrn,crm,crypxln-micxln,mhd

SH dkbrn-brn,ltgy-gy,gybrn, sbplty-plty,carb,slty,calc

SS qtz,wh,ltgy-gy,clr,vfg,wsrtd tt,calc

SH brn,ltgy-gy,sbplty-sbblky, slty,grdg to sltst ip,calc,frm

SS qtz,wh,ltgy,clr,vfg,tt,wsrtd m-wcmnt,calc,ang-sbrnd,grdg to sltst

SH ltgy-gy,sbblky,slty,grdg to sltst,calc,sndy ip,mhd-frm

SS qtz,clr,wh,glsy,vf-rr fg, wsrtd,p-mcmnt,calc,ltbrn stn ip, VSL DUL YELL FLUOR,FAIR STRMNG CUT

SH ltgy-gy,sbplty-sbblky,slty, grdg to slts,calc

SS qtz,clr,wh,occ ltbrn stn, msrtd,mcnt,vfg,grdg to sltst, VSL DUL YEL FLUOR,SL STRMNG CUT

SH ltgy-gy,crm,ltbrn,sbplty-sbblky,lmy ip,grdg to ls,frm-mhd vcacl

60 CG

SH ltgy-gy,sbblky,slty,grdg to sltst,mhd,calc

80 CG

SH dkbrn-brnblk,ltgy-gy,carb ip slty,sbblky,calc

5200

20 CG

SH dkbrn-blkbrn,ltgy-gy,carb ip slty,sbblky,calc

VERY POOR SAMPLES
HOLE UNLOADING CAVINGS

40 CG

60 CG

SH dkbrn-gybrn,v pet,com oily, sft-frm,slty,calc

80 CG

5300

20 CG

SH dkbrn-brn,ltgy-gy,sbplty-sbblky,carb ip,slty,frm-mhd,calc

40 CG

SH dkbrn,brn,gybrn,sbblky,blky slty,carb,tr pyr,calc

60

SH dkbrn,brn,gybrn,sbblky,blky slty,carb,tr pyr,calc
HOLE NOT UNLOADING

80 CG

SH brn-dkbrn,gybrn,gy-ltgy,slty sbblky,sft-frm,occ mhd,carb ip calc,sndy ip

5400

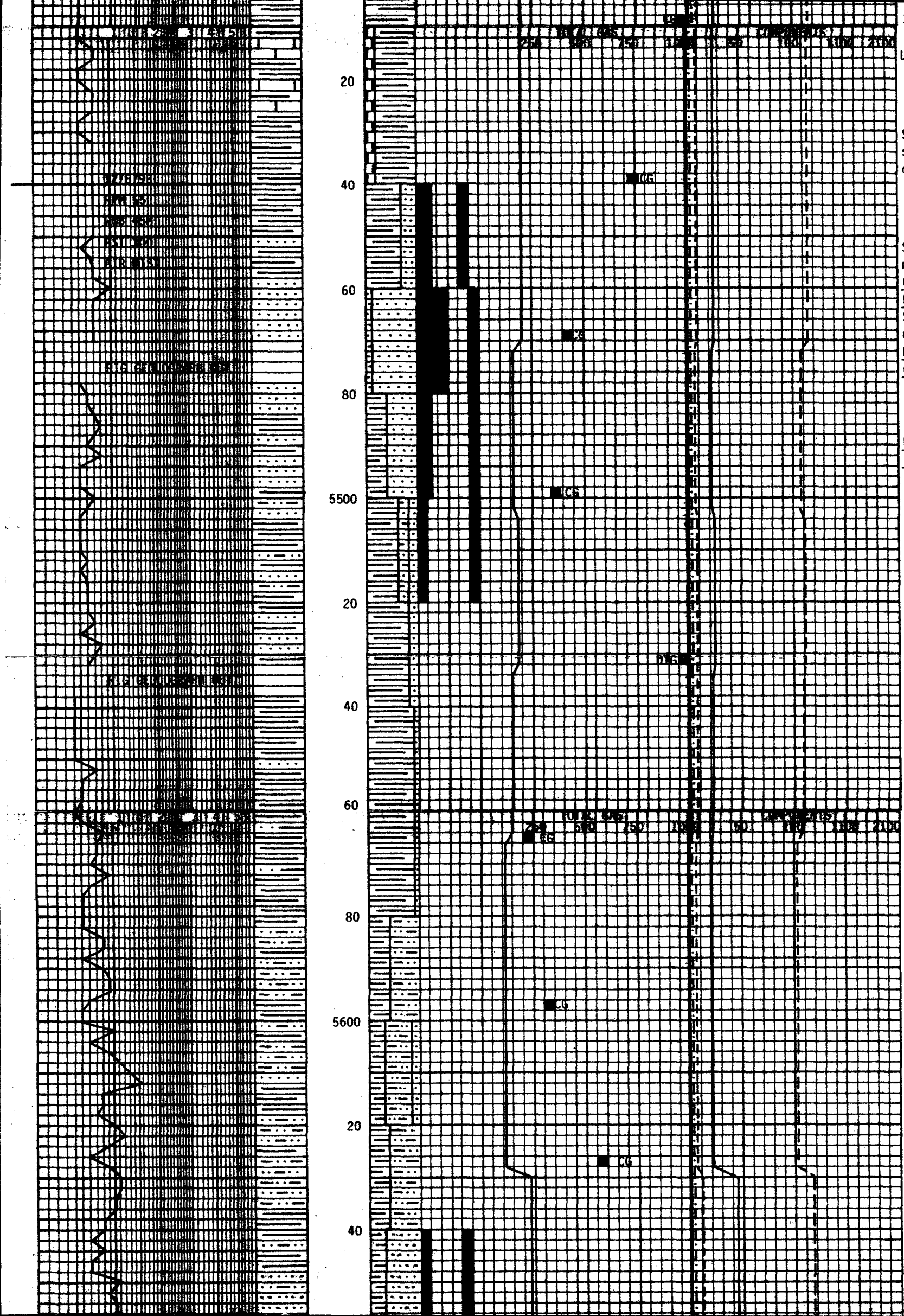
20
40
60
80
5500
20
40
60
80
5600
20
40
LS crm,cryptxln,plty,m hd
SH brn-dkbrn,plty-sb blky,slty, sndy ip,calc,com oilstn,calc, carb ip,tr pyr
SS qtz,clr,wh,ltgy,vf-fgr,occ mgr,msrtd,p-mcmt,sbang-sbrnd, COM BRN OIL STN, DULL YEL FLUOR, FAST STRM CUT
SS clr,ltgy,vf-fgr,sbang-rnd, uncon & calc,fri,DKBRN OIL STN, DULL YEL FLUOR, GOOD FAST STRM CUT
SS clr,f-cgr,sbng-sbrnd,uncon, DKBRN SPOTTY OIL STN,DULL YEL FLUOR, FAIR FAST STRM CUT
SH lt-mgy,mbrn,mgrngy,bent,tr pyr spcs,calc,plty-blky,frm
SLTST lt-mgy,vfgr,calc,frm,tt, grdg to vfgr ss ip
SH mgy,slty ip,calc,blky,frm-hd
SS lt-mgy,ltbrn ip,vglsy,vfgr, sbrnd-rnd,calc,frm-hd,tt
SH lt-mgy,dkbrn,bent,carb,calc ip,blky,frm,hd ip
SH lt-mgy,dkbrn,sl bent,slty ip tr carb,tr pyr spcs,calc,blky-plty,frm
SLTST lt-mgy,glsy,vfgr ip,sbang-rnd,calc,fri-frm,tt,grdg to vfgr ss ip
SS clr,f-mgr,sbang-sbrnd,uncon
SH lt-mgy,mbrn ip,sl bent,tr pyr spcs,calc,plty-blky,sft-frm
SLTST ltgy,clr,vfgr ip,sbang-rnd,calc,fri-frm,tt,grdg to vfgr ss
SS lt-mgy,clr,tr arg mtx,glsy, f-mgr,sbang-rnd,calc,fri &

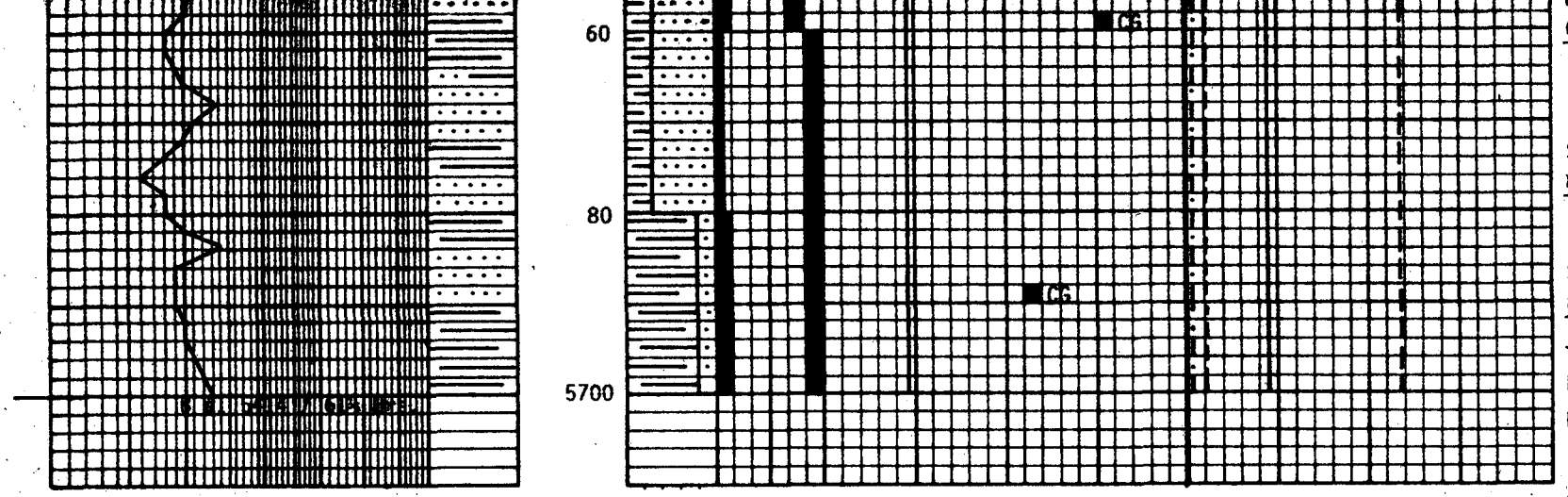

UNCON,20% YEL FLUOR, SLOW STRAW CUT

SS clr,f-mgr,sbang-rnd,uncon, 80% YEL FLUOR, SL CUT

SS clr,f-mgr,sbang-rnd,uncon, 80% YEL FLUOR, FAST CRUSH CUT IP

DRILLERS TD 5700'

LOGGING UNIT #1 RELEASED 12/8/93

KTECH

WELL SITE GEOLOGY
WELL LOGGING
CONSULTING

DUPLICATE

CONFIDENTIAL

Final Report

BALCRON OIL
BALCRON MONUMENT FEDERAL #24-12-J
(SE/SW) SECTION 12, T9S, R16E
DUCHESNE COUNTY, UTAH

2913 HERMOSA CT. • GRAND JUNCTION, COLORADO 81504 • (303) 241-9351

KTECH

GEOLOGY, MUD LOGGING
CONSULTING

December 8, 1993

RECEIVED
DEC 13 1993
DIVISION OF
OIL, GAS & MINING

Steve VanDelinder
Balcron Oil
P.O. Box 21017
Billings, MT 59104

Mr. VanDelinder:

Enclosed is the final log for your BALCRON MONUMENT FEDERAL #24-12-J well, located in Section 12, T19S, R16E of Duchesne Co., Utah.

I appreciated the opportunity to serve you. If I can be of any further assistance in the final evaluation of the Green River sands encountered, please feel free to call me.

It would be a pleasure to work with you in the future.

Respectfully

John Kuykendall

2913 Hermosa Ct. · Grand Junction, Colorado 81504 · (303) 241-9351

DEVIATION SURVEYS

WELL NAME BALCRON MONUMENT FEDERAL #24-12-J

COMPANY BALCRON OIL

CONTRACTOR UNION DRLG. INC. #17

SPUD DATE 12/3/93

ELEVATION 5495' GL (ung) - 5505' KB

SECTION 12, T9S, R16E

LOCATION DUCHESNE COUNTY, UTAH

TD DATE 12/8/93

DEPTH	DEV.	DEPTH	DEV.	DATE	DEPTH	FOOTAGE	DATE	DEPTH	FOOTAGE
1800'	3/4°			12/4/93	581'	1309'			
2300'	2°			12/5/93	1890'	1377'			
2800'	2°			12/6/93	3267'	1155'			
3800'	2°			12/7/93	4422'	1018'			
4300'	3°			12/8/93	5440'	260'			
4800'	2½°								
5050'	3°								

BIT RECORD

WELL NAME BALCRON MONUMENT FEDERAL #24-12-J

ELEVATION 5495' GL (ung) - 5505' KB

COMPANY BALCRON OIL

SECTION 12, T9S, R16E

CONTRACTOR UNION DRLG. INC. #17

LOCATION DUCHESNE COUNTY, UTAH

SPUD DATE 12/3/93

TD DATE 12/8/93

BIT #	SIZE	MAKE	TYPE	DEPTH IN	DEPTH OUT	FOOTAGE	HOURS	FT/HR
NB #1	7 7/8"	STC	F-47A	286'	5700'	5414'	61.50	88.0

K/J KTECH
WELL SITE GEOLOGY - MUD LOGGING
2913 HERMOSA CT., GRAND JUNCTION, COLORADO 81504
MAILING ADDRESS: P.O. BOX 590, CLIFTON, COLORADO 81520 • (303) 241-9351

COMPANY BALCRON OIL

WELL NO. BALCRON MONUMENT FEDERAL #24-12-J

LOCATION 539' FSL, 1777' FWL, (SE/SW), SECTION 12, T9S, R16E, DUCHESNE Co., UTAH.

ZONE OF INTEREST 1 **FORMATION** GREEN RIVER

INTERVAL: FROM 2647' TO 2657'

DRILL RATE: ABV 1.2 MIN/FT THRU 1.3 MIN/FT BELOW 1.1 MIN/FT

MUD GAS-CHROMATOGRAPH

	TOTAL	C1	C2	C3	C4	C5	OTHER
BEFORE	30	70	9	2	tr		
DURING	600	1600	170	25	6		
AFTER	510	1100	110	22	5		

TYPE GAS INCREASE: GRADUAL ☐ SHARP ☒ HOLE CONDITIONS: WASHED ☐ FAIR ☐ IN GUAGE ☒

GAS VARIATION WITHIN ZONE: STEADY ☒ ERRATIC ☐ INCREASING ☐ DECREASING ☐

FLUO: MINERAL ☐ NONE ☒ POOR ☐ FAIR ☐ GOOD ☐ EVEN ☐ SPOTTY ☐

FLUO COLOR: _____ % IN SHOW LITHOLOGY _____

CUT: NONE ☒ CRUSH ☐ POOR ☐ FAIR ☐ GOOD ☐ **STREAMING:** SLOW ☐ MOD ☐ FAST ☐

CUT COLOR: _____

STAIN: NONE ☒ POOR ☐ FAIR ☐ LIVE ☐ DEAD ☐ RESIDUE ☐ EVEN ☐ SPOTTY ☐ LT ☐ DK ☐

POROSITY: POOR ☒ FAIR ☐ GOOD ☐ KIND INTERGRANULAR, FAIR IP

LITHOLOGY SS lt-mgy,tr s&p,glsy,fgr,mgr ip,ang-rnd,calc,fri-frm,tt

SAMPLE QUALITY FAIR

REMARKS NSOFC. RELATED GAS INCREASE FROM 2675' TO 2705', 1.3 MIN/FT, .6 MIN/FT - 1.0 MIN/FT, 510u-690u-630u

SS vf-fgr,occ mgr,uncon,SL YEL FLUOR GOOD STRMG CUT. HOLE MAKING A LITTLE OIL.

NOTIFIED DENNIS REHRIG @ 12:30 **HRS. DATE** 12/5/93

ZONE DESCRIBED BY JOHN KUYKENDALL

KTECH
WELL SITE GEOLOGY - MUD LOGGING
2913 HERMOSA CT., GRAND JUNCTION, COLORADO 81504
MAILING ADDRESS: P.O. BOX 590, CLIFTON, COLORADO 81520 • (303) 241-9351

COMPANY BALCRON OIL

WELL NO. BALCRON MONUMENT FEDERAL #24-12-J

LOCATION 539' FSL, 1777' FWL, (SE/SW), SECTION 12, T9S, R16E, DUCHESNE Co., UTAH.

ZONE OF INTEREST 2 **FORMATION** GREEN RIVER

INTERVAL: FROM 3530' TO 3540'

DRILL RATE: ABV .8 MIN/FT THRU .4 MIN/FT BELOW .7 MIN/FT

MUD GAS-CHROMATOGRAPH

	TOTAL	C1	C2	C3	C4	C5	OTHER
BEFORE	710	1470	90	22	5		
DURING	930	1860	100	27	6		
AFTER	640	1380	90	22	5		

TYPE GAS INCREASE: GRADUAL ☐ SHARP ☒ HOLE CONDITIONS: WASHED ☐ FAIR ☐ IN GUAGE ☒

GAS VARIATION WITHIN ZONE: STEADY ☒ ERRATIC ☐ INCREASING ☐ DECREASING ☐

FLUO: MINERAL ☐ NONE ☐ POOR ☒ FAIR ☐ GOOD ☐ EVEN ☒ SPOTTY ☐

FLUO COLOR: VDULL YEL % IN SHOW LITHOLOGY TR

CUT: NONE ☐ CRUSH ☐ POOR ☐ FAIR ☒ GOOD ☐ **STREAMING:** SLOW ☐ MOD ☐ FAST ☒

CUT COLOR: YEL

STAIN: NONE ☐ POOR ☒ FAIR ☐ LIVE ☒ DEAD ☐ RESIDUE ☐ EVEN ☐ SPOTTY ☒ LT ☒ DK ☐

POROSITY: POOR ☐ FAIR ☐ GOOD ☒ KIND INTERGRANULAR, FAIR - GOOD

LITHOLOGY SS clr,ltgy,vf-mgr,sbang-rnd,calc,fri-frm & uncon

SAMPLE QUALITY GOOD

REMARKS TR MBRN SPOTTY STN, TR VDULL YEL FLUOR, FAIR FAST STRM CUT IP, FAST STRM CUT DRY.

NOTIFIED DENNIS REHRIG @ 06:30 **HRS. DATE** 12/6/93

ZONE DESCRIBED BY JOHN KUYKENDALL

K/J KTECH
WELL SITE GEOLOGY - MUD LOGGING
2913 HERMOSA CT., GRAND JUNCTION, COLORADO 81504
MAILING ADDRESS: P.O. BOX 590, CLIFTON, COLORADO 81520 • (303) 241-9351

COMPANY BALCRON OIL

WELL NO. BALCRON MONUMENT FEDERAL #24-12-J

LOCATION 539' FSL, 1777' FWL, (SE/SW), SECTION 12, T9S, R16E, DUCHESNE Co., UTAH.

ZONE OF INTEREST 3 **FORMATION** GREEN RIVER Y-3

INTERVAL: FROM 4106' TO 4120'

DRILL RATE: ABV 1 MIN/FT THRU .5 MIN/FT BELOW 1 MIN/FT

MUD GAS-CHROMATOGRAPH

	TOTAL	C1	C2	C3	C4	C5	OTHER
BEFORE	380	600	60	15	5		
DURING	380	600	60	15	5		
AFTER	380	600	60	15	5		

TYPE GAS INCREASE: GRADUAL ☐ SHARP ☐ HOLE CONDITIONS: WASHED ☐ FAIR ☐ IN GUAGE ☒

GAS VARIATION WITHIN ZONE: STEADY ☒ ERRATIC ☐ INCREASING ☐ DECREASING ☐

FLUO: MINERAL ☐ NONE ☐ POOR ☒ FAIR ☐ GOOD ☐ EVEN ☒ SPOTTY ☐

FLUO COLOR: DULL YEL % IN SHOW LITHOLOGY 50%

CUT: NONE ☐ CRUSH ☐ POOR ☐ FAIR ☐ GOOD ☒ **STREAMING:** SLOW ☐ MOD ☐ FAST ☒

CUT COLOR: YEL

STAIN: NONE ☐ POOR ☐ FAIR ☒ LIVE ☒ DEAD ☐ RESIDUE ☐ EVEN ☒ SPOTTY ☐ LT ☐ DK ☒

POROSITY: POOR ☐ FAIR ☒ GOOD ☐ KIND INTERGRANULAR

LITHOLOGY SS qtz,ltbrn-brn,clr,trns,g stn,sbang-sbrnd,calc

SAMPLE QUALITY GOOD

REMARKS 50% DULL YEL FLUOR, LTBRN-BRN STN, GOOD FAST STRM CUT. GAS INCREASE PROBABLY MASKED BY GAS SAND FROM ABOVE.

NOTIFIED DENNIS REHRIG @ 16:00 **HRS. DATE** 12/6/93

ZONE DESCRIBED BY JOHN KUYKENDALL

K/J KTECH
WELL SITE GEOLOGY - MUD LOGGING
2913 HERMOSA CT., GRAND JUNCTION, COLORADO 81504
MAILING ADDRESS: P.O. BOX 590, CLIFTON, COLORADO 81520 • (303) 241-9351

COMPANY BALCRON OIL

WELL NO. BALCRON MONUMENT FEDERAL #24-12-J

LOCATION 539' FSL, 1777' FWL, (SE/SW), SECTION 12, T9S, R16E, DUCHESNE Co., UTAH.

ZONE OF INTEREST 4 **FORMATION** GREEN RIVER Y-5

INTERVAL: FROM 4306' TO 4332'

DRILL RATE: ABV 1.3 MIN/FT THRU .7 MIN/FT BELOW 1.5 MIN/FT

MUD GAS-CHROMATOGRAPH

	TOTAL	C1	C2	C3	C4	C5	OTHER
BEFORE	350	400	50	10	3		
DURING	350	400	50	10	3		
AFTER	350	400	50	10	3		

TYPE GAS INCREASE: GRADUAL ☐ SHARP ☐ HOLE CONDITIONS: WASHED ☐ FAIR ☐ IN GUAGE ☒

GAS VARIATION WITHIN ZONE: STEADY ☒ ERRATIC ☐ INCREASING ☐ DECREASING ☐

FLUO: MINERAL ☐ NONE ☐ POOR ☒ FAIR ☐ GOOD ☐ EVEN ☒ SPOTTY ☐

FLUO COLOR: DULL YEL % IN SHOW LITHOLOGY 20%

CUT: NONE ☐ CRUSH ☐ POOR ☐ FAIR ☐ GOOD ☒ **STREAMING:** SLOW ☐ MOD ☐ FAST ☒

CUT COLOR: BRI YEL

STAIN: NONE ☐ POOR ☒ FAIR ☐ LIVE ☒ DEAD ☐ RESIDUE ☐ EVEN ☒ SPOTTY ☐ LT ☐ DK ☒

POROSITY: POOR ☐ FAIR ☒ GOOD ☐ KIND INTERGRANULAR

LITHOLOGY SS qtz,clr,wh,vf-fgr,wsrtd,m-pcmt,fri,sbrnd-sbang,sl ltbrn stn ip

SAMPLE QUALITY GOOD

REMARKS 20% DULL YEL FLUOR, GOOD FAST STRM CUT, LTBRN STN IP. GAS INCREASE MAY HAVE BEEN MASKED BY GAS SAND ABOVE.

NOTIFIED DENNIS REHRIG @ 20:00 **HRS. DATE** 12/6/93

ZONE DESCRIBED BY GEORGE NICHOLS

KTECH
WELL SITE GEOLOGY - MUD LOGGING
2913 HERMOSA CT., GRAND JUNCTION, COLORADO 81504
MAILING ADDRESS: P.O. BOX 590, CLIFTON, COLORADO 81520 • (303) 241-9351

COMPANY BALCRON OIL

WELL NO. BALCRON MONUMENT FEDERAL #24-12-J

LOCATION 539' FSL, 1777' FWL, (SE/SW), SECTION 12, T9S, R16E, DUCHESNE Co., UTAH.

ZONE OF INTEREST 5 **FORMATION** GREEN RIVER R-5

INTERVAL: FROM 4724' TO 4736'

DRILL RATE: ABV 1.6 MIN/FT THRU .6 MIN/FT BELOW 1.1 MIN/FT

MUD GAS-CHROMATOGRAPH

	TOTAL	C1	C2	C3	C4	C5	OTHER
BEFORE	360	530	45	10	2		
DURING	410	660	50	12	4		
AFTER	360	530	45	10	2		

TYPE GAS INCREASE: GRADUAL ☒ SHARP ☐ HOLE CONDITIONS: WASHED ☐ FAIR ☐ IN GUAGE ☒

GAS VARIATION WITHIN ZONE: STEADY ☒ ERRATIC ☐ INCREASING ☐ DECREASING ☐

FLUO: MINERAL ☐ NONE ☐ POOR ☒ FAIR ☐ GOOD ☐ EVEN ☒ SPOTTY ☐

FLUO COLOR: VDULL YEL % IN SHOW LITHOLOGY 100%

CUT: NONE ☐ CRUSH ☐ POOR ☐ FAIR ☐ GOOD ☒ **STREAMING:** SLOW ☐ MOD ☐ FAST ☒

CUT COLOR: YEL

STAIN: NONE ☐ POOR ☐ FAIR ☒ LIVE ☒ DEAD ☐ RESIDUE ☐ EVEN ☒ SPOTTY ☐ LT ☐ DK ☒

POROSITY: POOR ☐ FAIR ☒ GOOD ☐ KIND INTERGRANULAR, FAIR - GOOD

LITHOLOGY SS lt-dkbrn stn,vfgr,slty ip,calc,fri

SAMPLE QUALITY GOOD

REMARKS LT-DKBRN STN,VDULL YEL FLUOR, GOOD FAST STRM CUT. ASSOC OIL SHOW FROM 4761' TO 4772':

LT-DKBRN OIL STN,VDULL YEL FLUOR, FAIR FAST STRM CUT.

NOTIFIED DENNIS REHRIG @ 07:00 **HRS. DATE** 12/7/93

ZONE DESCRIBED BY JOHN KUYKENDALL

K/J **KTECH**
WELL SITE GEOLOGY - MUD LOGGING
2913 HERMOSA CT., GRAND JUNCTION, COLORADO 81504
MAILING ADDRESS: P.O. BOX 590, CLIFTON, COLORADO 81520 • (303) 241-9351

COMPANY BALCRON OIL

WELL NO. BALCRON MONUMENT FEDERAL #24-12-J

LOCATION 539' FSL, 1777' FWL, (SE/SW), SECTION 12, T9S, R16E, DUCHESNE Co., UTAH.

ZONE OF INTEREST 6 **FORMATION** GREEN RIVER B-1

INTERVAL: FROM 5462' TO 5483'

DRILL RATE: ABV 1.0 MIN/FT THRU .7 MIN/FT BELOW .8 MIN/FT

MUD GAS-CHROMATOGRAPH

	TOTAL	C1	C2	C3	C4	C5	OTHER
BEFORE	200	600	25	9	2		
DURING	160	260	22	6	1		
AFTER	180	510	25	9	2		

TYPE GAS INCREASE: GRADUAL ☒ SHARP ☐ HOLE CONDITIONS: WASHED ☐ FAIR ☐ IN GUAGE ☒

GAS VARIATION WITHIN ZONE: STEADY ☐ ERRATIC ☒ INCREASING ☐ DECREASING ☒

FLUO: MINERAL ☐ NONE ☐ POOR ☐ FAIR ☒ GOOD ☐ EVEN ☒ SPOTTY ☐

FLUO COLOR: DULL YEL % IN SHOW LITHOLOGY 100%

CUT: NONE ☐ CRUSH ☐ POOR ☐ FAIR ☐ GOOD ☒ **STREAMING:** SLOW ☐ MOD ☐ FAST ☒

CUT COLOR: YEL

STAIN: NONE ☐ POOR ☐ FAIR ☒ LIVE ☒ DEAD ☐ RESIDUE ☐ EVEN ☐ SPOTTY ☒ LT ☐ DK ☒

POROSITY: POOR ☐ FAIR ☐ GOOD ☒ KIND INTERGRANULAR

LITHOLOGY SS clr,ltgy,vf-fgr,sbang-rnd,uncon & calc,fri

SAMPLE QUALITY GOOD

REMARKS DKBRN SPOTTY STN, 100% DULL YEL FLUOR, GOOD FAST STRM CUT. GAS ERRATIC DUE TO HOLE LOADING DECREASE DUE TO THIS.

NOTIFIED DENNIS REHRIG @ 07:00 **HRS. DATE** 12/8/93

ZONE DESCRIBED BY JOHN KUYKENDALL

EQUITABLE RESOURCES
ENERGY COMPANY
BALCRON OIL DIVISION
1601 Lewis Avenue
P.O. Box 21017
Billings, MT 59104-1017

TREATMENT REPORT

Date of Treatment: 12-13-93

Well Name Monument Fed. 24-12 J SEC. 12 TWN. 9 S RNG. 16 E

Field Monument Butte County Duchesne State Utah

Formation/Perforations: Green River 5476-85

Treatment type: HCL BREAK DOWN Total Number of Holes: 18

Treatment Company: DOWELL

Volume	Fluid	Conc.	Sand Characteristics Size	Volume
_____ Gal.				
_____ Gal.				
_____ Gal.				
_____ Gal.		/		#
_____ Gal.		/		#
_____ Gal.		/		#
_____ Gal.		/		#
_____ Gal.		/		#
_____ Gal.		/		#
_____ Gal.		/		#
_____ Gal.		/		#

TOTAL FLUID PUMPED: 1000 gal. 15 % HCL Acid
_____ gal. _____ fluid

TOTAL SAND VOL.: _____ lbs. _____ / _____ sand
_____ lbs. _____ / _____ sand
_____ lbs. _____ / _____ sand
_____ lbs. _____ / _____ bauxite

Flushed well with _____ gal. of 2% KCL WATER
36 ball sealers were pumped. Was ball action seen? HIT HIT HIT yes
Barrels of Load to Recover 68 BLTR.
Avg. Treating Pressure = 2300 psi, max = 3980 psi, min = 1320 psi.
Avg. Treating Rate = 4.0 bpm, max = 4.0 bpm, min = 4.0 bpm.
ISIP = 1150 psi, 5 min. = _____ psi, 10 min. = _____ psi, 15 min. = _____ psi.
Well will be shut in for 30 hrs. before bringing back fluid.

REMARKS: INITIAL BREAK AT 3960 PSI AT 3.6 BPM, BACK TO 1440 PSI AT 4.2 BPM
SURGE BALL OFF, PUMP FOR RATE, 7.5 BPM AT 2500 PSI

Well site Supervisor: Dale Griffin

EQUITABLE RESOURCES
ENERGY COMPANY
BALCRON OIL DIVISION
1601 Lewis Avenue
P.O. Box 21017
Billings, MT 59104-1017

TREATMENT REPORT

Date of Treatment: 12-14-93

Well Name Monument Fed. 24-12J SEC. 12 TWN. 9S RNG. 16E
Field Monument Butte County Duchesne State Utah

Formation/Perforations: Green River / 5476-85

Treatment type: SAND FRAC. Total Number of Holes: 18
Treatment Company: DOWELL

Volume	Fluid	Conc.	Psi	BPM	Sand Characteristics Size	Volume
____ Gal.	____		Psi	BPM		
500 Gal.	15% HCL		2465	3.4		
9000 Gal.	2% KCL WATER	0	2100	20.1		
500 Gal.	"	1#	2040	20.1	16/30	#
[illegible]						
500 Gal.	"	3#	2020	20.1	16/30	#
500 Gal.	"	4#	1936	20.1	16/30	#
1000 Gal.	"	5#	1960	20.1	16/30	#
1500 Gal.	"	6#	1580	20.1	16/30	#
[illegible] Gal.	"	7#	1515	20.1	16/30	#
1347 [illegible] Gal.	"	0	1760	20.1	/	#

TOTAL FLUID PUMPED: 500 gal. 15% HCL Acid
____ gal. 2% KCL WATER fluid

TOTAL SAND VOL.: 23350 lbs. 16/30 sand
____ lbs. / sand
____ lbs. / sand
____ lbs. / bauxite

Flushed well with 1347 gal. of 2% KCL WATER
____ ball sealers were pumped. Was ball action seen? ____
Barrels of Load to Recover 410 BLTR.
Avg. Treating Pressure = [illegible] 1950 psi, max = 3315 psi, min = 1515 psi
Avg. Treating Rate = 20.0 bpm, max = 20.2 bpm, min = 1806 bpm.
ISIP = ____ psi, 5 min. = 1419 psi, 10 min. = 1369 psi, 15 min. = 1341 psi.
Well will be shut in for 14 hrs. before bringing back fluid.

REMARKS: [illegible] SPEAR HEAD FRAC W/500 GAL 15% HCL.
5.3 # ON PERFS, AT SCREEN OUT.

Balcron Oil
DAILY OPERATING REPORT

DATE: 12/14/93

****JONAH UNIT PARTNERS' DAILY REPORT****

BALCRON MONUMENT FEDERAL #42-1J
Operator: EREC/Balcron
BOD WI: 79.78%
Location: SE NE Section 1, T9S, 16E
Duchesne County, Utah
Prospect: Jonah Unit / Monument Butte

---TIGHT HOLE---

12-11-93 Completion
Start well pumping, 5 SPM, 82" stroke length. American D-228, S/N D228-G-3837 (KARST), Engine Ajax E-42, S/N 69880 (KARST).
DC: $16,223

BALCRON MONUMENT FEDERAL #24-12J
Operator: EREC/Balcron
BOD WI: 79.78%
Location: SE SW Section 12, T9S, R16E
Duchesne County, Utah
Prospect: Jonah Unit / Monument Butte

---TIGHT HOLE---

12-11-93 Completion
MIRU Cannon Well Service Rig #1. NU wellhead, NU BOP. SDFD.
DC: $1,273

12-13-93 Completion
TIH w/4-3/4" bit, 5-1/2" scraper & 181 jts 2-7/8" tbg, tag PBTD @ 5634' KB, circ hole clean w/125 bbls 2% KCL wtr. Pressure test csg & BOP to 1000 psi - OK. TOOH w/tbg & tools. RU Cutter to perf 5476'-85' KB (2 SPF). RD Cutter. TIH w/RBP, retrieving head, 1 jt 2-7/8" tbg, 5-1/2" packer, SN & 176 jts 2-7/8" tbg. Set BP @ 5526' KB, set packer @ 5425' KB, EOT @ 5460' KB. RU Dowell to do HCL break down refer to treatment report. TOOH w/tbg 64 jts. SWIFN.
DC: $6,541

BALCRON MONUMENT FEDERAL #41-14J
Operator: EREC/Balcron
BOD WI: 79.78%
Location: NE NE Section 14, T9S, R16E
Duchesne County, Utah
Prospect: Jonah Unit / Monument Butte
PTD: 5,700' Green River Oil - Dev.

12-14-93 TD: 3,624' (849') Day 4
Formation: Green River
MW 8.4 VIS 26
Present Operation: Drilling
TIH, blow hole to btm, get back to drilling, survey & drill ahead.
DC: $13,030 CC: $79,853

Balcron Oil
DAILY OPERATING REPORT

DATE: 12/15/93

****JONAH UNIT PARTNERS' DAILY REPORT****

BALCRON MONUMENT FEDERAL #24-12J
Operator: EREC/Balcron
BOD WI: 79.78%
Location: SE SW Section 12, T9S, R16E
Duchesne County, Utah
Prospect: Jonah Unit / Monument Butte

---TIGHT HOLE---

12-14-93 Completion
RU Dowell to frac 5476'-85' refer to treatment report. Pressure test surface equipment to 4000 psi - OK. Screen out. RD Dowell. SWIFD.
DC: $20,220

BALCRON MONUMENT FEDERAL #31-7J
Operator: EREC/Balcron
BOD WI: 79.78%
Location: NW NE Section 7, T9S, R17E
Duchesne County, Utah
Prospect: Jonah Unit/Monument Butte Field

---TIGHT HOLE---

12-14-93 Completion
RU Western to frac 4903'-10', 4914'-17'. Pressure test surface equipment to 4000 psi - OK refer to treatment report. Screen out. RD Western. SWIFD.
DC: $19,296

BALCRON MONUMENT FEDERAL #41-14J
Operator: EREC/Baclron
BOD WI: 79.78%
Location: NE NE Section 14, T9S, R16E
Duchesne County, Utah
Prospect: Jonah Unit / Monument Butte

---TIGHT HOLE---

12-15-93 TD: 4,602' (978') Day 5
Formation: Yellow Zone
MW 8.4 VIS 26
Present Operation: Drilling
Drill, survey, & clean on rig.
DC: $13,955 CC: $93,808

Balcron Oil
DAILY OPERATING REPORT

DATE: 12/16/93

****JONAH UNIT PARTNERS' DAILY REPORT****

BALCRON MONUMENT FEDERAL #24-12J
Operator: EREC/Balcron
BOD WI: 79.78%
Location: SE SW Section 12, T9S, R16E
Duchesne County, Utah
Prospect: Jonah Unit / Monument Butte

---TIGHT HOLE---

12-15-93 Completion
CP - 920 psi. TIH w/retrieving head, 1 jt 2-7/8" tbg, 5-1/2" HD packer, SN, & 109 jts 2-7/8" tbg. Tag sand @ 3394' KB, circ down to 5526' KB. Pull up & set apcker @ 5425' KB. Made 8 swab runs. Recovered 46 BW, heavy sand. SWIFN.
DC: $4,446

BALCRON MONUMENT FEDERAL #31-7J
Operator: EREC/Balcron
BOD WI: 79.78%
Location: NW NE Section 7, T9S, R17E
Duchesne County, Utah
Prospect: Jonah Unit/Monument Butte Field

---TIGHT HOLE---

12-15-93 Completion
TIH w/retrieving tool, 1 jt 2-7/8" tbg, 5-1/2" HD packer, seat nipple, &145 jts 2-7/8" tbg. Tag sand @ 4488' KB, circ down to 4970' KB. Pull up & set packer @ 4867' KB. Made 17 swab runs, recovered 70 BF, 13 BO, 57 BW. Last 2 runs, no sand. Release packer. SWIFN.
DC: $1,903

BALCRON MONUMENT FEDERAL #41-14J
Operator: EREC/Baclron
BOD WI: 79.78%
Location: NE NE Section 14, T9S, R16E
Duchesne County, Utah
Prospect: Jonah Unit / Monument Butte

---TIGHT HOLE---

12-16-93 TD: 5,098' (418') Day 6
Formation: Green Zone
MW 8.4 VIS 26
Present Operation: Drilling
Drill, trip for bit, had to ream 3050'-3090'. Going back in hole, ream 100' to btm. 1" of snow.
DC: $7,004 CC: $100,812

EQUITABLE RESOURCES
ENERGY COMPANY
BALCRON OIL DIVISION
1601 Lewis Avenue
P.O. Box 21017
Billings, MT 59104-1017

TREATMENT REPORT

Date of Treatment: 12-17-93

Well Name Monument Fed. 24-12 J SEC. 12 TWN. 9S RNG 16E
Field Monument Butte County Duchesne State Utah

Formation/Perforations: Green River / 4746-50

Treatment type: HCL BREAK Down Total Number of Holes: 8

Volume	Fluid	Conc.	Sand Characteristics Size	Volume
____ Gal.				
____ Gal.				
____ Gal.				
____ Gal.			/	#
____ Gal.			/	#
____ Gal.			/	#
____ Gal.			/	#
____ Gal.			/	#
____ Gal.			/	#
____ Gal.			/	#
____ Gal.			/	#

TOTAL FLUID PUMPED: 500 gal. 15 % HCL Acid
1176 gal. 2 % KCL WATER fluid

TOTAL SAND VOL.: ____ lbs. ____ / ____ sand
____ lbs. ____ / ____ sand
____ lbs. ____ / ____ sand
____ lbs. ____ / ____ bauxite

Flushed well with ____ gal. of ____
16 ball sealers were pumped. Was ball action seen? HIT 11 BALL OFF
Barrels of Load to Recover 40 BLTR.
Avg. Treating Pressure = 2500 psi, max = 5100 psi, min = 1900 psi.
Avg. Treating Rate = 4.0 bpm, max = 5.8 bpm, min = 1.7 bpm.
ISIP = 1800 psi, 5 min. = ____ psi, 10 min. = ____ psi, 15 min. = ____ psi.
Well will be shut in for 0 hrs. before bringing back fluid.

REMARKS: INITIAL BREAK AT 1900 PSI AT 2.5 BPM
BACK TO 2700 PSI AT 4.2 BPM
SURGE BALLS OFF, PUMP FOR RATE 5.6 BPM AT 2500 PSI

EQUITABLE RESOURCES
ENERGY COMPANY
BALCRON OIL DIVISION
1601 Lewis Avenue
P.O. Box 21017
Billings, MT 59104-1017

TREATMENT REPORT

Date of Treatment: 12-17-93

Well Name Monument Fed. 24-12J SEC. 12 TWN. 9S RNG. 16E

Field Monument Butte County Duchesne State Utah

Formation/Perforations: Green River / 4746-50

Treatment type: SAND FRAC. Total Number of Holes: 8

Volume	Fluid	Conc.	PSI	BPM	Sand Characteristics Size	Volume
____ Gal.						
500 Gal.	HCL 15%					
5000 Gal.	2% KCL WATER PAD	0	2450	15.0		
500 Gal.	"	2#	2400 2290	15.0	16/30	#
500 Gal.	"	3#	2350 2340	15.0	16/30	#
500 Gal.	"	4#	2340 2340	15.0	16/30	#
[illegible]						
750 Gal.	"	6#	2270 2190	15.0	16/30	#
750 Gal.	"	7#	2120 2000	15.0	16/30	#
3000 Gal.	" FLUSH	0	1920 2400	15.0	SCREEN OUT	#
____ Gal.					/	#

TOTAL FLUID PUMPED: 500 gal. 15% HCL Acid
____ gal. 2% KCL WATER fluid

TOTAL SAND VOL.: 13976 lbs. 16/30 sand
____ lbs. / sand
____ lbs. / sand
____ lbs. / bauxite

Flushed well with 3000 gal. of 2% KCL WATER.
____ ball sealers were pumped. Was ball action seen? ____
Barrels of Load to Recover 262 BLTR.

Avg. Treating Pressure = 2290 psi, max = 3500 psi, min = 1920 psi.
Avg. Treating Rate = 15 bpm, max = 15 bpm, min = 15 bpm.
ISIP = 2450 psi, 5 min. = 1571 psi, 10 min. = 1486 psi, 15 min. = 1484 psi.
Well will be shut in for 18 hrs. before bringing back fluid.

REMARKS: [illegible] SPEAR HEAD FRAC W/500 GAL HCL, 15%
SCREENED OUT W/41 BBL. OF FLUSH TO GO.

Balcron Oil
DAILY OPERATING REPORT

DATE: 12/17/93

****JONAH UNIT PARTNERS' DAILY REPORT****

BALCRON MONUMENT FEDERAL #24-12J **Operator: EREC/Balcron**
BOD WI: 79.78%
Location: SE SW Section 12, T9S, R16E
Duchesne County, Utah
Prospect: Jonah Unit / Monument Butte

---TIGHT HOLE---

12-16-93 Completion
CP - 25 psi. Flow back 10 BW, 2 BO. Made 24 swab runs, recovered 144 bbls fluid, trace oil, 144 BW. Last 3 runs, fluid stable @ 2700', no sand. Release packer, tag sand @ 5516' KB, circ down to 5526' KB. Release BP, reset BP @ 4810' KB, pressure test BP - OK. TOOH w/tbg, SN, packer & retrieving head. RU Cutter to perf 4746'-50' (2 SPF). RD Cutter. TIH w/retrieving head, 1 jt tbg, 5-1/2" HD packer, SN & 150 jts 2-7/8" tbg. SWIFN.
DC: $2,888

BALCRON MONUMENT FEDERAL #31-7J **Operator: EREC/Balcron**
BOD WI: 79.78%
Location: NW NE Section 7, T9S, R17E
Duchesne County, Utah
Prospect: Jonah Unit/Monument Butte Field

---TIGHT HOLE---

12-16-93 Completion
CP - 150 psi, bleed well off. TIH & tag sand @ 4920', circ down to 4980'. Release BP, TOOH w/tbg, BP & packer. TIH w/production string as follows:

	Length	Depth KB
1 jt 2-7/8" tbg EUE J-55 8RD 6.5#	31.29'	5192.00'
1 perf sub 2-7/8" x 4'	4.00'	5160.71'
1 seat nipple	1.15'	5156.71'
166 jts tbg 2-7/8" EUE J-55 8RD 6.5#	5142.56'	5155.56'
KB	13.00'	

ND BOP, NU wellhead. TIH w/BHP 2-1/2" x 1-1/2" x 16' FWAC w/PA plunger, pump #1025 (TRICO), 128 3/4" x 25' plain rods D-61 (TRICO). SWIFN.
DC: $15,505

BALCRON MONUMENT FEDERAL #41-14J **Operator: EREC/Balcron**
BOD WI: 79.78%
Location: NE NE Section 14, T9S, R16E
Duchesne County, Utah
Prospect: Jonah Unit / Monument Butte

12-17-93 TD: 5,698' (600') Day 7
Formation: Green River
MW 8.4 VIS 26
Present Operation: Logging
Drill, survey, blow hole, load hole & circ for logs. TOH for logs, logging. Schlumberger couldn't make it, had to call Halliburton.
DC: $11,295 CC: $112,107

Balcron Oil
DAILY OPERATING REPORT

DATE: 12/20/93

****JONAH UNIT PARTNERS' DAILY REPORT****

BALCRON MONUMENT FEDERAL #24-12J **Operator: EREC/Balcron**
BOD WI: 79.78%
Location: SE SW Section 12, T9S, R16E
Duchesne County, Utah
Prospect: Jonah Unit / Monument Butte

---TIGHT HOLE---

12-17-93 Completion
RU Dowell to do HCL break down on 4746'-50'. Pressure test surface equipment to 6000 psi - OK. Spot acid at perfs, set packer @ 2682' KB, EOT 4717' KB, BP - 4810' KB. Start break down **refer to treatment report.** TOOH w/tbg, SN & packer. RU Dowell to do sand frac, pressure test surface equipment to 4000 psi - OK **refer to treatment report.** RD Dowell. SWIFN.
DC: $19,809

12-18-93 Completion
CP - 650 psi, flow back 40 BW. TIH w/retrieving head, 1 jt 2-7/8" tbg, 5-1/2" HD packer, SN & 109 jts 2-7/8" tbg. Tag sand @ 3425' KB, circ down to 4810' KB, pull up & set packer @ 4682' KB, EOT @ 4717' KB. Made 14 swab runs, recovered 84 BW, trace oil & gas. Last 3 runs, fluid level stable @ 275', no sand. Release packer, RIH & tag sand @ 4800' KB, circ down to 4810' KB (BP), release BP, reset BP @ 4155' KB. Test BP to 1000 psi - OK. TOOH w/9 jts tbg. SWIFN.
DC: $4,818

BALCRON MONUMENT FEDERAL #41-14J **Operator: EREC/Baclron**
BOD WI: 79.78%
Location: NE NE Section 14, T9S, R16E
Duchesne County, Utah
Prospect: Jonah Unit / Monument Butte

---TIGHT HOLE---

12-17-93 5-1/2" csg & cmt as follows:

Guide Shoe	.60
1 jt 5-1/2" 15.5# shoe jt	45.20'
Float collar	1.00'
130 jts 5-1/2" 15.5# K-55	5591.01'
	5637.81'
Landing jt	9.00'
Csg set @	5646.81'
PBTD:	5600.01'

20 centralizers.
Cmt by Dowell w/225 sxs Hilift cmt & tail w/261 sxs Class "G". Float did not hold. Plug down @ 11:45 p.m. 12-17-93, release rig @ 3:45 a.m. 12-18-93.

12-18-93 TD: 5,698' (0') Day 8
Formation: Green River
Present Operation: RDMO.
Logging, trip in hole w/collars & drill pipe. LD drill pipe & collars. Change pipe rams in BOP & test 5-1/2" rams to 2000# - OK. Run 5-1/2" csg, circ, had 20' of stickey fill on btm. Did not circ down, cmt by Dowell. Set slips, ND & clean mud tank.
DC: $61,609 CC: $173,716

STATE OF UTAH
DIVISION OF OIL, GAS AND MINING
WORKOVER AND COMPLETION FORM

COMPANY: EQUITABLE RESOURCES CO COMPANY REP: DALE GRIFFIN

WELL NAME: BALCRON MON FED #24-12J API NO: 43-013-31409

SECTION: SE/SW SEC 12 TWP: 09S RANGE: 16E

CONTRACTOR: CANNON WELL SERVICE RIG NUMBER: ?

INSPECTOR: DENNIS INGRAM TIME: 11:47 AM AM/PM DATE: 12/21/93

OPERATIONS AT THE TIME OF INSPECTION: UNKNOWN -- NO PERSONNEL ON LOCATION.

==========

WELL SIGN: Y TYPE OF WELL: OIL STATUS PRIOR TO WORKOVER: DRLG

H2S: N/A ENVIRONMENTAL: OK PIT: Y BOPE: Y

DISPOSITION OF FLUIDS USED: RESERVE PIT, FRAC MASTER, AND TRUCK

DOES THIS WORKOVER QUALIFY FOR STATE TAX CREDITS:(Y/N)

PERFORATED: YES STIMULATED: SAND CONTROL:

WATER SHUT OFF: WELLBORE CLEANOUT: WELL DEEPENED:

CASING OR LINER REPAIR: ENHANCED RECOVERY: THIEF ZONE:

CHANGE OF LIFT SYSTEM: TUBING CHANGE: OTHER CEMENT SQUEEZE:

SURFACE EQUIPMENT CHANGES OR ASSOCIATED COSTS DO NOT QUALIFY FOR CREDITS.

==========

REMARKS:

ORIGINAL COMPLETION. TUBING & PACKER ON BANK.

EQUITABLE RESOURCES Co 43-013-31409

MONUMENT FED #24-12J
SE/SW SEC12 T9S R16E

1/20/94

NORTH

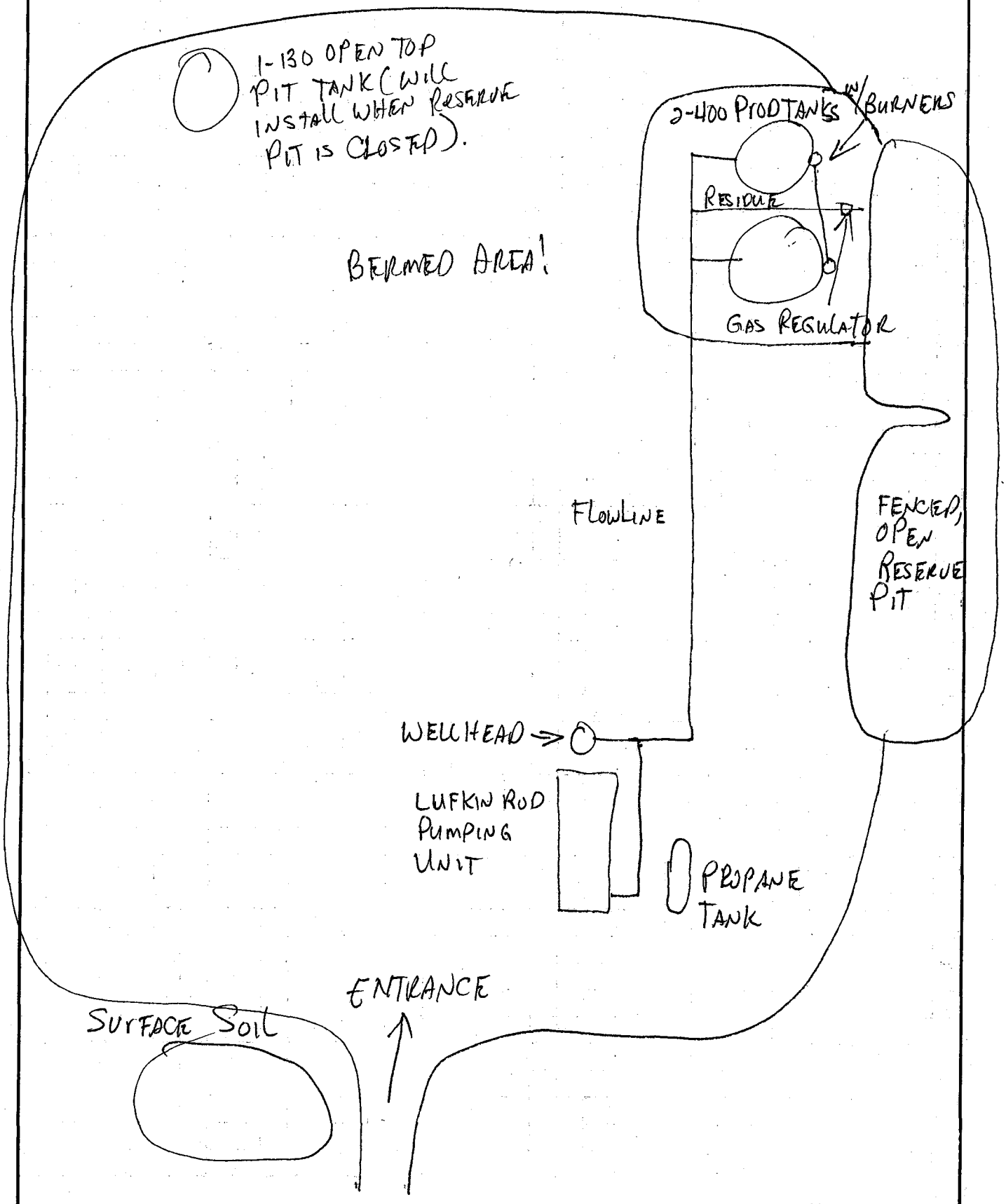

Balcron Oil
DAILY OPERATING REPORT

DATE: 12/22/93

****JONAH UNIT PARTNERS' DAILY REPORT****

BALCRON MONUMENT FEDERAL #24-12J
Operator: EREC/Balcron
BOD WI: 79.78%
Location: SE SW Section 12, T9S, R16E
Duchesne County, Utah
Prospect: Jonah Unit / Monument Butte

---TIGHT HOLE---

12-20-93 Completion
TOH w/tbg & tools. SWI.
DC: $575

BALCRON MONUMENT FEDERAL #41-14J
Operator: EREC/Baclron
BOD WI: 79.78%
Location: NE NE Section 14, T9S, R16E
Duchesne County, Utah
Prospect: Jonah Unit / Monument Butte

---TIGHT HOLE---

12-21-93 Completion
MIRU Basin Well Service Rig #2. Install well head, NU BOP. TIH w/4-3/4" bit, 5-1/2" scraper & 179 jts 2-7/8" tbg. Tag PBTD, circ well clean w/130 bbls of 2% KCL wtr. TOOH w/tbg, scraper, & bit. SWIFN.
DC: $20,804

EQUITABLE RESOURCES
ENERGY COMPANY
BALCRON OIL DIVISION
1601 Lewis Avenue
P.O. Box 21017
Billings, MT 59104-1017

TREATMENT REPORT

Date of Treatment: 12-22-93

Well Name Monument Fed. 24-12J SEC. 14 TWN. 9S RNG. 16E
Field Monument Butte County Duchesne State Utah

Formation/Perforations: Green River / 4080-86, 4118-23 25PF

Treatment type: HCL BREAK DOWN BOWELL Total Number of Holes: 22

Volume	Fluid	Conc.	Sand Characteristics Size	Volume
_____ Gal.				
_____ Gal.				
_____ Gal.				
_____ Gal.		/		#
_____ Gal.		/		#
_____ Gal.		/		
_____ Gal.		/		#
_____ Gal.		/		#
_____ Gal.		/		#
_____ Gal.		/		#
_____ Gal.		/		#

TOTAL FLUID PUMPED: 500 gal. 15% HCL Acid
2184 gal. 2% KCL WATER fluid

TOTAL SAND VOL.: _____ lbs. _____ / _____ sand
_____ lbs. _____ / _____ sand
_____ lbs. _____ / _____ sand
_____ lbs. _____ / _____ bauxite

Flushed well with _____ gal. of 2% KCL WATER
44 ball sealers were pumped. Was ball action seen? HHHH III yes
Barrels of Load to Recover 64 BLTR.
Avg. Treating Pressure = 1500 psi, max = 3200 psi, min = 1415 psi
Avg. Treating Rate = 4.0 bpm, max = 4.0 bpm, min = 4.0 bpm.
ISIP = 1375 psi, 5 min. = ~~1200~~ psi, 10 min. = ~~1200~~ psi, 15 min. = _____ psi
Well will be shut in for _____ hrs. before bringing back fluid.

REMARKS: INITIAL BREAK AT 3200 PSI AT 2.0 BPM
BACK TO 2150 PSI AT 4.0 BPM
SURGE BALLS OFF. PUMP FOR RATE. 8.5 BPM AT 2500 PSI

Dale Griffin

EQUITABLE RESOURCES
ENERGY COMPANY
BALCRON OIL DIVISION
1601 Lewis Avenue
P.O. Box 21017
Billings, MT 59104-1017

TREATMENT REPORT

Date of Treatment: 12-22-93

Well Name Monument Fed. 24-12 J SEC. 14 TWN. 9 S RNG. 16 E
Field Monument Butte County Duchesne State Utah

Formation/Perforations: Green River / 4080-86, 4118-23

Treatment type: SAND FRAC Total Number of Holes: 22
Treatment Company: DOWELL

Volume	Fluid	Conc.	psi	BPM	Sand Characteristics Size	Volume
____ Gal.	____		215	4.0		
500 Gal.	HCL	0	1375	4.0		
10,000 Gal.	2% KCL WATER	0	1750	20.1		
1,000 Gal.	"	2 #	1876	20.0		
1,000 Gal.	"	3 #	1930	19.8	16/30	#
1,500 Gal.	"	4 #	2020	19.8	16/30	#
1,500 Gal.	"	6 #	1960	20.0	16/30	#
1,500 Gal.	"	7 #	1910	20.0	16/30	#
3996 Gal.	"	0	1910	20.0	16/30	#
____ Gal.	____		1940	20.0	/	#
____ Gal.	____		1710	19.5	/	#
			1950	20.0	/	#
			1870	20.0	/	#
			1825	20.1	16/30	#
			1520	20.1	/	#
			2150	20.2	/	#

TOTAL FLUID PUMPED: 500 gal. 15% HCL, Acid
20496 gal. 2% KCL WATER fluid

TOTAL SAND VOL.: 33085 lbs. 16/30 sand
____ lbs. / sand
____ lbs. / sand
____ lbs. / bauxite

Flushed well with ____ gal. of 2% KCL WATER
____ ball sealers were pumped. Was ball action seen? ____
Barrels of Load to Recover 500 BLTR.
Avg. Treating Pressure = 2215 psi, max = 1950 psi, min = 215 psi.
Avg. Treating Rate = 20.0 bpm, max = 20.1 bpm, min = 4.0 bpm.
ISIP = 1850 psi, 5 min. = 1629 psi, 10 min. = 1525 psi, 15 min. = 1485 psi.
Well will be shut in for 19 hrs. before bringing back fluid.

REMARKS: PRESS. TEST SURFACE EQUIP. TO 4000 PSI, OK

Well site Supervisor: Dale Griffin

Balcron Oil
DAILY OPERATING REPORT

DATE: 12/23/93

****JONAH UNIT PARTNERS' DAILY REPORT****

BALCRON MONUMENT FEDERAL #24-12J

Operator: EREC/Balcron
BOD WI: 79.78%
Location: SE SW Section 12, T9S, R16E
Duchesne County, Utah
Prospect: Jonah Unit / Monument Butte

---TIGHT HOLE---

12-22-93 Completion
RU Cutter to perf 4080'-86', 4118'-23'. RD Cutter. TIH w/HD packer, SN, & 129 jts 2-7/8" tbg, set packer @ 4000' KB, EOT @ 4036' KB. RU Dowell to do HCL break down, 4080'-86', 4118'-23'. Spot acid 500' above perfs, set packer. **Refer to treatment report.** TOOH w/tbg & tools. RU Dowell to sand frac 4080'-86, 4118'-23' **refer to treatment report.** SWIFN.
DC: $24,476

12-23-93 Completion
CP - 735 psi, bleed well down. TIH w/retrieving tool, 1 jt 2-7/8" tbg, packer, SN & 124 jts 2-7/8" tbg. Tag sand @ 3890' KB, circ down to 4155' KB (BP), set packer @ 4000' KB, EOT @ 4035' KB. Made 12 swab runs, recovered 72 BW, trace of oil. Last 2 runs, no sand. Release packer, tag sand @ 4130' KB, circ down to 4155' KB, release BP, TOOH w/tbg & tools. TIH w/production string as follows:

	LENGTH	DEPTH KB
1 jt 2-7/8" tbg EUE, J-55 8RD 6.5#	31.42	5550.71'
1 perf sub 2-7/8" x 3'	3.20'	5519.29'
1 seat nipple	1.10'	5516.09'
177 jts 2-7/8" tbg, EUE, J-55 8RD 6.5#	5504.99'	5514.09'
KB (10')		

SWIFN.
DC: $1,647

12-24-93 Completion
ND BOP, NU well head. TIH w/following:
1 BHP 2-1/2" x 1-1/2" x 16' RWAC w/PA plunger (trico)
119 3/4" x 25' plain rods D-61 (Trico)
two 3/4" x 6' ponys
one 1-1/4" x 22' polish rod SM (Trico)
Clamp rods, pressure test pump & tbg to 1000 psi - OK. BHP - #1027 (Trico).
DC: $5,429

Balcron Oil
DAILY OPERATING REPORT

DATE: 1/3/94

****JONAH UNIT PARTNERS' DAILY REPORT****

BALCRON MONUMENT FEDERAL #41-14J

Operator: EREC/Baclron
BOD WI: 79.78%
Location: NE NE Section 14, T9S, R16E
Duchesne County, Utah
Prospect: Jonah Unit / Monument Butte

---TIGHT HOLE---

12-30-93 Completion
ND BOP, NU wellhead. TIH w/production string as follows:
1 BHP 2-1/2" x 1-1/2" x 16' RWAC w/PA plunger, pump #1028 (Trico).
202 3/4" x 25' plain rods, D-61 (Trico)
one 3/4" x 8' pony
one 3/4" x 4' pony
one 1-1/4" x 22' polish rod (Trico)
Clamp rods off. Test tbg & pump 1000 psi - OK. RDMO
DC: $7,355

BALCRON MONUMENT FEDERAL #24-12J

Operator: EREC/Balcron
BOD WI: 79.78%
Location: SE SW Section 12, T9S, R16E
Duchesne County, Utah
Prospect: Jonah Unit / Monument Butte

---TIGHT HOLE---

12-30-93 Completion
Start unit pumping 4-1/4" stroke, 86" stroke.
DC: $30,330

WELL REPORT

MONUMENT BUTTE FIELD
Balcron Oil Co. 24–12J Monument Butte–Federal
539' FSL, 1777' FWL, Sec. 12, T9S–R16E
Duchesne County, Utah

CONFIDENTIAL

DUPLICATE

By

DENNIS REHRIG & ASSOCIATES, INC.

Oil & Gas Consulting

4924 Rimrock Road
Billings, Montana 59106

(406) 656–4785

WELLSITE GEOLOGIST'S REPORT

MONUMENT BUTTE FIELD
Balcron Oil Co. 24-12J Monument Butte-Federal
539' FSL, 1777' FWL, Sec. 12, T9S-R16E
Duchesne County, Utah

DENNIS REHRIG & ASSOCIATES, INC.

Oil & Gas Consulting

4924 Rimrock Road
Billings, Montana 59106

(406) 656-4785

DENNIS C. REHRIG & ASSOCIATES, INC.
Oil & Gas Exploration
4924 RIMROCK ROAD • BILLINGS, MONTANA 59106 • (406) 656-4785

MONUMENT BUTTE FIELD
Balcron Oil Co. 24-12J Monument Butte-Federal
539' FSL, 1777' FWL, Sec. 12, T9S-R16E
Duchesne County, Utah

TABLE OF CONTENTS

By:
DENNIS C. REHRIG
Consulting Geologist
For:
DENNIS C. REHRIG & ASSOCIATES, INC.

Balcron Oil Co. 24-12J Monument Butte-Federal
539' FSL, 1777' FWL, Sec. 12, T9S-R16E
Duchesne County, Utah

GENERAL REVIEW

The Balcron Oil Co. 24-12J Monument Butte-Federal (SE¼SW¼ S-12, T9S-R16E, Duchesne County, Utah) was drilled as an infill development well in the Monument Butte Field.

This well was supported by extensive subsurface offset well control and drilled for future water flood control and identification of anticipated additional Douglas Creek and Wasatch Tongue oil sands.

The surface hole was air drilled and surface casing was set prior to moving Union Drilling Co. Rig No. 17 on location and spudding on December 3, 1993. A two-man mud logging unit and wellsite geologist were on site from 1400' to total depth. The Green River and Douglas Creek formations were penetrated at 1466' and 4568' making them respectively 42' high and 51' high structurally to the offset G. S. Campbell 4 Government-C&O (NE¼SW¼ S-12, T9S-R16E) control well.

Numerous sandstone zones starting at 2682' appear prospective based on mud-log, sample shows, and/or E-logs. All sandstones which had significant gas and/or visual shows are noted elsewhere in this report.

This well was drilled to 5700' (Driller) and 5704' (Logger).

Subsequent to log review the operator elected to run 5½" production casing to total depth.

The rotary was released 12/9/93.

Respectfully submitted,

DENNIS C. REHRIG

Balcron Oil Co. 24-12J Monument Butte-Federal
539' FSL, 1777' FWL, Sec. 12, T9S-R16E
Duchesne County, Utah

WELL DATA

OPERATOR:	Balcron Oil Company
LEASE & WELL NO.:	Monument Butte-Federal 24-12J
LOCATION:	539' FSL, 1777' FWL, Sec. 12, T9S-R16E
PROSPECT/FIELD:	Monument Butte Field
COUNTY:	Duchesne
STATE:	Utah
BASIN:	Uintah
WELL TYPE:	Development
BASIS FOR PROSPECT:	Subsurface well control
ELEVATIONS:	G.L. 5495', K.B. 5505'
SPUD DATE:	7:30 PM (MST) 12/3/93 (Rotary)
OUT FROM UNDER SURFACE CASING:	7:30 PM (MST) 12/3/93 (Surface casing previously set)
DRILLING COMPLETED:	8:15 AM (MST) 12/8/93
LOGGING COMPLETED:	7:45 PM (MST) 12/8/93
RIG RELEASE:	5:00 PM (MST) 12/9/93
TOTAL DAYS SPUD THROUGH LOGGING:	6 days
TOTAL DEPTH:	5,700' (Driller) 5,704' (Logger)
TOTAL DRILLING DAYS:	6 days (Surface casing previously set)

HOLE SIZE & CASING:	Hole Size 12¼" Surface to 286' 7⅞" 286' to T.D.	Casing Size 8⅝" surface to 286' K.B. 5½" Production Casing to 5,685' K.B.
WELL STATUS:	Cased for completion attempt in Douglas Creek.	
PENETRATION:	284' below Carbonate Marker.	
COMPANY DRILLING CONSULTANT:	Al Plunkett	
DRILLING CONTRACTOR:	Union Drilling Co.	
RIG NO.:	17	
TOOLPUSHER:	Dave Gray	
RIG SPECIFICATIONS:	Draw Works – Cabot–Franks, powered by one D–343 Diesel Cat Derrick – Cabot–Franks, 97' mast.	
BLOW OUT PREVENTER:	Make: Cameron. Type 10" x 5000 lbs. Drill Pipe: Size: 4½" OD, 2¼" ID, Thread: XO. BHA: Length 557', 18 jts–6" DC. Tool joints: 6¼" OD, Type – XO.	
MUD PUMP:	No. 1 – Gardner–Denver–FXN, 14" Stroke, 5½" liner.	
MUD COMPANY:	Unibar Drilling Fluids, Inc. Operator bought products and drilling contractor mixed as needed.	
MUD PROGRAM:	Air/Foam 286' – Total Depth. Loaded hole with KCl/water for E–logs.	
ELECTRIC OPEN–HOLE LOGGING PROGRAM:	Halliburton Logging Services, Inc. Engineer: Kirk Evatt Witnessed by: Dennis Rehrig and Al Plunkett – Dual Laterolog Micro–Guard, w/Gamma Ray, Caliper and Tension Curves (278'–5702') – Spectral Density/Dual Spaced Neutron (2500'–5659')	
LOST CIRCULATION ZONE OR DRILLING PROBLEMS:	Had some gas flow starting @ 2650' which probably masked mud–log readings for remainder of hole, but presented no drilling problems.	
WELLSITE GEOLOGIST:	Dennis C. Rehrig	

SAMPLING PROGRAM:	50' Samples from 1,400'–3,850'. 20–30' Samples from 3,850'–Total Depth, Caught 20' samples except when penetration was extremely fast, then caught 30' samples.
SAMPLE QUALITY:	Generally fair but fluid intermittently loading hole the bottom 1700' caused sample quality problems at times.
SAMPLE DISPOSITION:	Utah Geological Survey – Salt Lake City, Utah
MUD LOGGING EQUIPMENT:	K–Tech – two man unit operated by John Kuykendall and George Nichols.
CORE PROGRAM:	None.
DRILL STEM TEST:	None.
SURFACE CASING:	8⅝" Surface – 256' K.B. Surface hole drilled and casing set by small air–impact rig, details of casing and cement not available for this report.
PRODUCTION CASING:	Ran 128 jts 5½" casing to 5685' K.B. Cemented w/200 sxs lead Ultra–lite and 240 sxs 50–50 Poz. Plug down @ 1:00 PM 12/9/93.

Balcron Oil Co. 24-12J Monument Butte-Federal
539' FSL, 1777' FWL, Sec. 12, T9S-R16E
Duchesne County, Utah

DAILY DRILLING HISTORY

Daily drilling reports taken primarily from Rig Tower Sheets and supplemented by Drilling Supervisor.
Day commenced at 6:00 AM (MST) day of prior day of report and ends at 6:00 AM (MST) day of report.

Days Since Spud	1993 Date	Depth	Ftg in Last 24 Hrs	Activity (hrs) Drlg	Maint. and Repairs	Other	Bit No.	W O B (M)	RPM	PP	Activity
1	12/4	658'	372'	8.00	3.25	12.75	1	45	55	110/200	Move and rig up, pressure test, PU DC's, work on booster, drilling cement, drilling 7⅞" hole with air and foam, service rig and pumps, work on booster, drilling, change air head rubber, drilling.
2	12/5	2338'	1680'	21.75	0.50	1.75	1	45	50	210	Drilling, survey, service rig and operate pipe rams, drilling, survey, drilling, survey, service rig, drilling, survey.
3	12/6	3582'	1244'	22.25	0.50	1.25	1	45	50	230/260	Survey, check pipe rams, drilling, service rig and pumps, survey, drilling, service rig, survey, drilling.
4	12/7	4698'	1116'	21.25	1.00	1.75	1	45	50	270	Drilling, survey, service rig, close and open pipe rams, drilling, service rig and pump, drilling, clean hole for survey, survey, service rig, drilling.

Days Since Spud	1993 Date	Depth	Ftg in Last 24 Hrs	Activity (hrs) Drlg	Maint. and Repairs	Other	Bit No.	W O B (M)	RPM	PP	Activity
5	12/8	5627'	929'	19.75	0.25	4.00	1	45	50	310	Drilling, run survey, trip 4 stds out to unload hole, service rig, open and close rams, TIH – blow water to bottom, drilling, clean and circ hole w/air and foam, survey, clean and circ hole, drilling, service rig, drilling.
6	12/9	5700'	73'	2.25	0	21.75	1	45	30	310	Drilling, circ hole on air, put mud pump on hole, condition and circ hole for E–logs, TOH, RU loggers and log well, TIH w/DC's and 41 stds DP, RU laydown line and tubs, LD DP, TIH, LD DP and DC's, clean floor off, change casing heads, wait on tester, RU to test casing, test stack, RU to run casing and run 5½" production casing.
7	12/10	5700'	0'	–	–	11.00	–	–	–	–	Run 5½" casing, cement, WOC, release rig @ 5:00 PM 12/9/93.

Balcron Oil Co. 24-12J Monument Butte-Federal
539' FSL, 1777' FWL, Sec. 12, T9S-R16E
Duchesne County, Utah

SURVEYS VERTICAL HOLE

Drilling Depth	Degrees
380'	1°
800'	1°
1300'	¾°
1800'	¾°
2300'	2°
2800'	2°
3300'	1¾°
3800'	2°
4300'	3°
4800'	2½°
5050'	3°

Balcron Oil Co. 24–12J Monument Butte–Federal
539' FSL, 1777' FWL, Sec. 12, T9S–R16E
Duchesne County, Utah

BIT RECORD

Contractor: Union Drilling Co. **Operator:** Balcron Oil Co. **Lease:** Federal **State:** Utah **County:** Duchesne **Sec/T–ship/Range:** SESW Sec. 12, T9S–R16E	**Rig No.** 17 **Field:** Monument Butte **Well No.** 24–12J	**Rig Make:** Cabot–Franks **Derrick:** Cabot–Franks 97' mast **Pump #1:** Gardner–Denver–FXN Liner 5½" x 14"	**Collars:** ODxIDxLength BHA 6" x 2¼" x 557' **Drill Pipe–Size Wt** 4½" 16.6 E **Tool Joint:** 6¼"	**SPUD** (for 7⅞" hole) 12/3/93 **Under Surface** (rotary) 12/3/93 **Total Depth** 12/8/93 **Total Days Drilling** 6	**Toolpusher/Drillers** Dave Gray Scott Cawdinski Bill Satterfield Jeff White Chris Chapman **Operators Representative** Al Plunkett **Mud Type:** Air/Foam

Bit No	Bit Size	Bit Mfgr	Bit Type	Jet Size 32nds	Ser. No.	Depth Out	Feet	Hrs	Ft/ Hr	Cum Hrs	Wt 1000#	Rotary RPM	Vert Dev	Pump Press	PUMPS			MUD		DULL COND			Remarks Date, Formation, etc.
															No	Liner ID	SPM	Wt	Vis	T	B	G	
1	7⅞	STC	F45A	Open	KW9965	5700'	5414	61	88.8	61	45	45/55	3°	Drilled with air & foam									

BALCRON OIL 24-12J MONUMENT BUTTE-FEDERAL
539' FSL 1777' FWL, SECTION 12, T 9 S-R 16 E
DUCHESNE COUNTY, UTAH

TIME/DEPTH PENETRATION CURVE

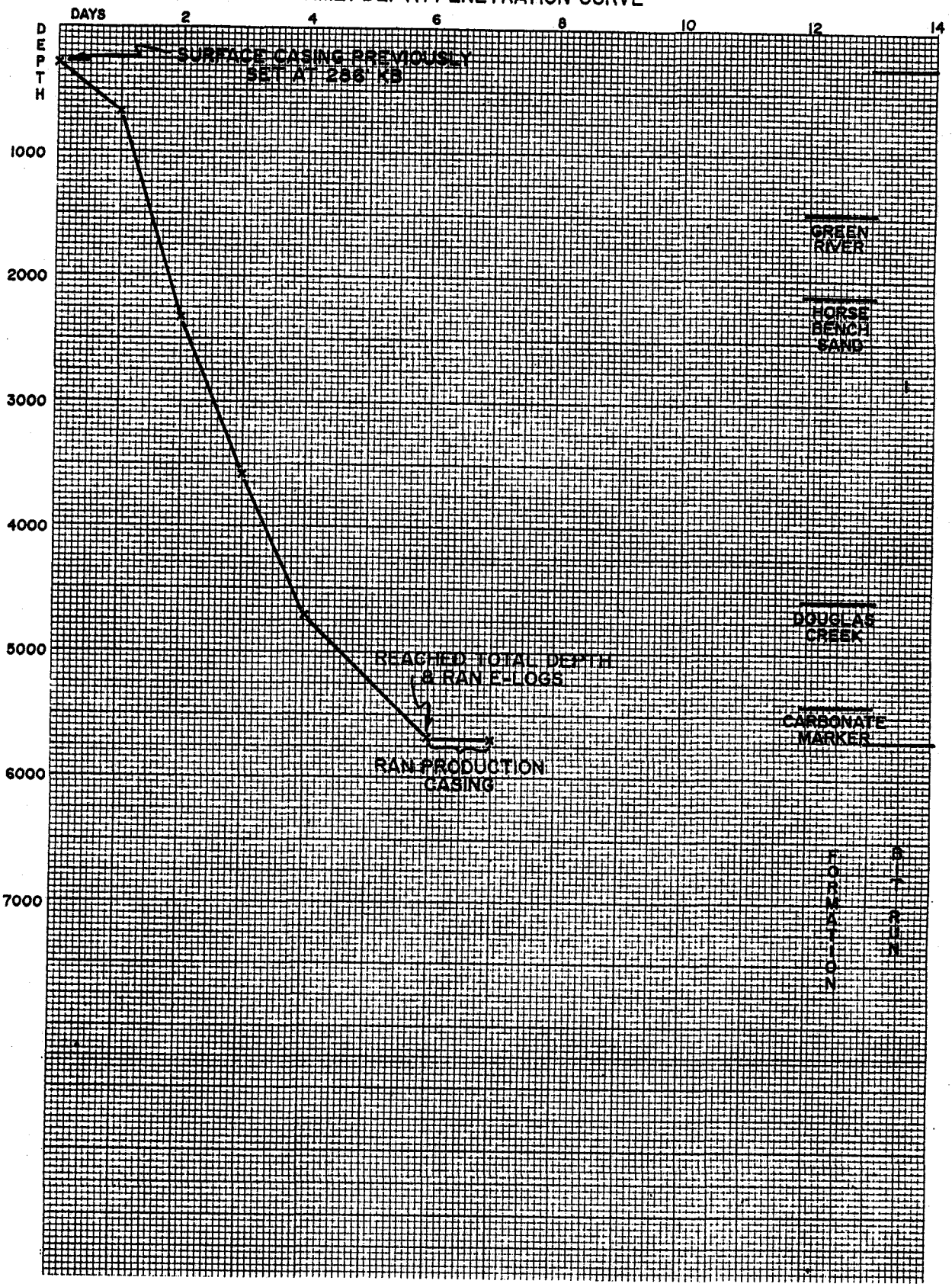

Balcron Oil Co. 24-12J Monument Butte-Federal
539' FSL, 1777' FWL, Sec. 12, T9S-R16E
Duchesne County, Utah

FORMATION TOPS

ELEVATIONS: G.L. 5495', K.B. 5505'

	E-Log Top	Subsea Datum	Structural Relationship To Reference Wells *
Green River	1466'	(+4039')	42' Hi
Horsebench Sand	2122'	(+3383')	59' Hi
2nd Garden Gulch	3773'	(+1732')	58' Hi
Yellow Marker	4403'	(+1102')	58' Hi
Douglas Creek	4568'	(+ 937')	51' Hi
2nd Douglas Creek Mkr	4802'	(+ 703')	59' Hi
Green Marker	4944'	(+ 561')	66' Hi
Carbonate Marker	5420'	(+ 85')	NDE
TOTAL DEPTH:	5704' Logger		

* Reference Well:

G. S. Campbell 4 Government C&O
NE¼SW¼ Sec. 12, T9S-R16E
Duchesne County, Utah

NOTE: Correlations and nomenclature that used by operator.

Balcron Oil Co. 24-12J Monument Butte-Federal
539' FSL, 1777' FWL, Sec. 12, T9S-R16E
Duchesne County, Utah

REFERENCE WELL E-LOG FORMATION BOREHOLE AND SUBSEA DATUMS

G. S. Campbell
4 Government - C&O
NE¼SW¼ Sec. 12, T9S-R16E
Duchesne County, Utah

K.B. 5462'

Formation		
Green River	1465'	(+3997')
Horsebench Sand	2138'	(+3324')
2nd Garden Gulch	3788'	(+1674')
Yellow Marker	4418'	(+1044')
Douglas Creek	4576'	(+ 886')
2nd Douglas Creek Mkr	4818'	(+ 644')
Green Marker	4967'	(+ 495')
Carbonate Marker	NDE	
TOTAL DEPTH	5348' (Logger)	

NOTE: Correlations and nomenclature that used by operator.

Balcron Oil Co. 24-12J Monument Butte-Federal
539' FSL, 1777' FWL, Sec. 12, T9S-R16E
Duchesne County, Utah

SIGNIFICANT GAS KICKS AND/OR SHOWS

As reported by Mudlogger

Formation	Sample Depth	Time (Before-During-After) Min/Ft	Total Gas (Before-During-After)	
Horsebench Sand	2647'-2657	1.2 - 1.3 - 1.1	30-600-510	
Horsebench Sand	3530'-3540'	.8 - .4 - .7	710-930-640	
2nd Garden Gulch	4106'-4120'	1.0 - .5 - 1.0	380-380-380	Gas probably masked by gas from above.
2nd Garden Gulch	4306'-4332'	1.3 - .7 - 1.5	350-350-350	Gas probably masked by gas from above.
Douglas Creek	4724'-4736'	1.6 - .6 - 1.1	360-410-360	
Carbonate Marker	5462'-5483'	1.0-.7-.8	200-160-180	Gas erratic due to hole loading w/fluid.

NOTE: After gas flow at approximately 2650' gas reading appeared to be masked for rest of hole. Had much intermittent fluid loading hole in bottom approximate 700' of hole which caused sample quality and gas reading problems at times.

POTENTIAL SANDSTONE ZONES

Provided by Wellsite Geologist

E-Log Depth (Spectral Density/Dual Spaced Neutron Log)

2682'-2710'	
3541'-3545'	
3848'-3882'	Gross interval.
4080'-4086'	
4118'-4125'	
4311'-4322'	
4718'-4729'	
5020'-5026'	
5045'-5050'	
5187'-5196'	
5466'-5486'	

NOTE: Sandstone not always seen in samples due to sample quality or thinness of sandstone in some cases, also in lower portion of hole particularly, Sandstone with oil shows is present in samples but not confirmed by E-logs. Frequently, E-logs do not confirm samples. Hole loading with cuttings and fluid during connections are the primary causes of poor samples at times. Also once well penetrated some oil zones, most samples were partially-moderately contaminated with oil or an oily film.

Balcron Oil Co. 24-12J Monument Butte-Federal
539' FSL, 1777' FWL, Sec. 12, T9S-R16E
Duchesne County, Utah

SAMPLE DESCRIPTIONS

By: Dennis C. Rehrig

Samples caught and lagged from trap of blue line by Mud Loggers. Samples were examined wet, under reflected light and 3x magnification from 1400' to total depth, for porosity identification samples were dried. Sample descriptions only tie moderately well or not at all to drill time log. This was due to air/foam drilling and rapid penetration rates. Sample quality was generally fair-good, except intermittent fluid loading the hole the bottom approximately 700' did present sample quality problems at times. All sample descriptions are interpretive and not tied to E-logs.

1400-50	Siltstone frequently grading to very fine grained Sandstone - clear-milky, occasionally cream, moderately calcareous, some specks of carbonaceous material, generally well consolidated, moderately hard-firm, no apparent porosity, NSFOC, frequently pyritic, some lithic particles.
	Shale - light-medium gray, frequently brownish gray, moderately firm-moderately soft, moderately calcareous, sub-blocky in part, frequently silty, moderately speckled with dark brown carbonaceous material.
1450-1500	Dolomite-Limy Dolomite - medium-dark brown, frequently orangish tan-olive tan, cryptocrystalline, firm, brittle in part, slightly argillaceous in part, moderately carbonaceous, frequently microcrystalline disseminated Pyrite, dull gold mineral fluorescence, no cut.
1500-50	Shale - medium-dark gray, occasionally dark brownish gray, slightly calcareous, firm-moderately firm, sub-blocky in part, moderately carbonaceous, frequently pyritic.
	Dolomite-Limy Dolomite - as above.
1550-1700	Dolomite-Limy Dolomite - as above.
1700-50	Dolomite-Limy Dolomite - abundant drab olive tan color, more argillaceous, abundant Pyrite.

1750–1800	Dolomite–Limy Dolomite – slightly orangish brown–medium brown, occasionally drab olive tan, cryptocrystalline, firm–moderately firm, slightly argillaceous in part, dense, frequently pyritic, moderately–highly carbonaceous, dull gold mineral fluorescence, no cut.
1800–50	Limy Dolomite–Dolomite – generally medium brown, frequently tan to light grayish tan, cryptocrystalline, firm–moderately soft, slightly argillaceous in part, slightly–moderately carbonaceous, frequently pyritic, dull gold mineral fluorescence in part, no cut.
1850–1900	Dolomite–Limy Dolomite – drab olive tan–medium to dark brown as 1750–1800' above.
1900–2000	Dolomite–Limy Dolomite – commonly medium brown, slightly orange in part to frequently brownish gray–drab olive tan as 1750–1800' above.
2000–50	Limy Dolomite–Dolomite – grayish tan–slightly drab olive tan, frequently medium brown, moderately firm, slightly argillaceous in part, occasionally pyritic, dense, cryptocrystalline, dull gold mineral fluorescence in part, no cut.
2050–2100	Dolomite–Limy Dolomite – drab olive tan–medium to dark brown–frequently orangish brown, slightly petroliferous in part, dull gold mineral fluorescence in part, very weak dull yellow milky cut, in part.
2100–50	Dolomite–Limy Dolomite – slightly orangish brown, medium brown–tan, cryptocrystalline, moderately firm occasionally moderately soft, slightly argillaceous in part, dense, occasional Pyrite, slightly–moderately carbonaceous.
2150–2200	Limy Dolomite–Dolomite – drab olive brown–medium to dark brown, cryptocrystalline occasionally microcrystalline, firm–moderately firm, slightly–moderately carbonaceous, dense.
	Some Siltstone – clear–milky–slightly cream, slightly–moderately calcareous, siliceous in part, well consolidated, generally moderately hard–firm, dense, slightly argillaceous in part.
	Some Shale – light–medium gray, slightly–moderately calcareous, moderately firm–moderately soft, sub–blocky in part.

2200–2350	Dolomite–Limy Dolomite – orangish, moderately–dark brown – medium–dark drab olive tan, moderately–highly carbonaceous, trace petroliferous material, cryptocrystalline, firm–moderately firm, trace Pyrite, slightly argillaceous in part.
2350–2400	Limy Dolomite – generally drab dark olive tan, occasionally dark brown and petroliferous in part, firm, moderately–highly carbonaceous, trace of algal laminae, dense, no fluorescence, very weak bluish milky cut in part, slightly argillaceous in part.
2400–2500	Limy Dolomite–Dolomite – generally as above, some orangish tan–brown, highly carbonaceous in part, some algal laminae.
2500–50	Limy Dolomite–Dolomite – as above.
	Limestone – buff–light tan–occasionally cream, microcrystalline to occasionally cryptocrystalline, firm–moderately hard, dense, some Pyrite.
2550–2600	Limy Dolomite – dark brown–frequently orangish tan–medium to dark brown, moderately firm–moderately soft, some algal laminae, moderately–highly carbonaceous, petroliferous in part, dense, siliceous material, generally no fluorescence very weak slow bluish yellow streaming–milky cut in part.
	Some Sandstone very fine grained ranging to Siltstone – generally clear–milky, frequently lithic material–carbonaceous fragments, well consolidated–moderately consolidated, slightly friable in part, slightly calcareous, slightly argillaceous in part, frequently pyritic, generally looks tight, trace pinpoint medium–dark brown oil stain, very weak dull gold fluorescence, fair–good dull yellow streaming cut.
2600–50	Limy Dolomite – as above.
	Some Siltstone ranging to very fine grained Sandstone as above, tight with trace of show as above.
	Some Limestone–Argillaceous Limestone – buff–light tan, cryptocrystalline, moderately soft, dense, slightly carbonaceous.
2650–60	Limy Dolomite as 2550–2600 as above.

Frequently Siltstone and very fine grained Sandstone, generally clear–milky, occasionally cream, slightly calcareous in part, slightly argillaceous in part, some lithic–carbonaceous fragments, frequently pyritic, generally well–moderately consolidated, occasionally friable, moderately well sorted, sub–angular to sub–round, generally tight, probably some fair intergranular porosity, trace pinpoint medium brown oil stain, some dull yellow fluorescence, weak streaming–milky bluish yellow cut.

Some Shale – light–medium gray, frequently silty, slightly–moderately calcareous, moderately firm, sub–blocky in part, frequently speckled with carbonaceous material, pyritic in part.

2660–2700 No sample available. Hole blowing gas.

2700–50 Sandstone – milky–clear, generally fine grained ranges to very fine grained, highly unconsolidated, highly friable, generally clean, generally well–moderately well sorted, sub–round to sub–angular, very faint tan oil stain in part, very faint dull yellow fluorescence, good bright yellow flash cut. Good intergranular porosity.

2750–2800 Sandstone – clear–milky, generally very fine grained, ranges up to fine grained, highly unconsolidated, friable, clean, well sorted, sub–round to sub–angular, good intergranular porosity. Generally no observable stain or fluorescence, trace very faint tan oil stain, no observable fluorescence, weak immediate bluish yellow milky–flash cut.

Some Dolomite–Argillaceous Dolomite – tan – medium–dark brown, frequently drab olive tan, cryptocrystalline, moderately firm, slightly moderately carbonaceous, dense.

2800–50 Dolomite–Argillaceous Dolomite – generally as above, some medium–dark gray highly carbonaceous–slightly petroliferous particles, dull yellow fluorescence, weak bluish yellow streaming cut.

2850–2900 Dolomite–Argillaceous Dolomite – as above.

Shale – light–medium gray, frequently dark gray, slightly–moderately calcareous, moderately firm–moderately soft, sub–blocky in part.

Sandstone – very fine grained commonly ranging to silt – clear – milky – light tan oil stain in part, weak dull faint yellow fluorescence, fair

bluish yellow streaming–milky cut. Entire sample appears to have oily film on cutting surfaces, may be mostly contaminated. Generally unconsolidated–moderately consolidated, friable in part, slightly calcareous in part, some fair intergranular porosity.

2900–50 Limestone–Argillaceous Limestone – buff–tan, cryptocrystalline, dense.

Shale – grayish tan, frequently dark brown specks carbonaceous material, moderately carbonaceous, slightly–moderately calcareous, frequently silty.

Some loose sand grains probably cavings from above. Show from entire sample. Appears to be patchy oily film on cuttings which is visible as sample dries, assume this is contamination.

2950–3000 Dolomite–Limy Dolomite – tan–medium to dark brown, occasionally black and petroliferous, cryptocrystalline, moderately firm–moderately soft, frequently argillaceous, moderately–highly carbonaceous, trace Pyrite, dull gold–yellow fluorescence, entire sample appears to be coated with oily film.

Note: Due to pervasive oily contamination, all fluorescence and cuts are suspect unless some oil stain is observed. Therefore no reference to fluorescence or cut will be made again in this report unless it is considered pertinent to a likely reservoir quality rock.

3000–50 Limestone–Dolomitic Limestone – grayish tan–buff–tan, cryptocrystalline, moderately firm occasionally moderately soft, dense, slightly argillaceous in part, slightly carbonaceous in part, frequently pyritic.

3050–3100 Shale – light–medium gray, frequently cream, moderately soft–moderately firm, sub–blocky in part, slightly–moderately calcareous, slightly carbonaceous in part, some Pyrite, frequently silty.

Siltstone ranging to very fine grained Sandstone – clear–milky frequently slightly cream, argillaceous in part, slightly calcareous, moderately well consolidated, some slightly friable Sandstone, moderately well sorted, sub–angular, NSFOC.

3100–50 Dolomite–Limy Dolomite – as above.

	Some Limestone–Dolomitic Limestone – cream–buff, as above.
3150–3200	Dolomite–Limy Dolomite – as above.
	Limestone–Dolomitic Limestone – as above.
	Sample highly contaminated by oil.
3200–50	Shale – medium–dark gray, slightly–moderately calcareous, moderately firm, sub–blocky, moderately carbonaceous, much dark tan–grayish tan Shale, moderately–highly calcareous, moderately firm, sub–blocky, highly pyritic, moderately carbonaceous.
	Limestone–Dolomitic Limestone – cream, buff–light tan, as above.
3250–3300	Shale – as above.
	Limestone – cream–buff, cryptocrystalline–frequently microcrystalline, moderately firm, slightly argillaceous in part, dense.
3300–50	Limestone – light tan–occasionally buff, mottled in part, moderately firm–moderately soft, dense, cryptocrystalline–microcrystalline, some unidentifiable particles possibly pellets, slightly argillaceous in part.
	Shale – medium–dark gray and grayish tan, as above.
3350–3400	Limestone – as above, trace Pyrite.
	Some Shale – as above.
3400–50	Shale – commonly medium gray, frequently light gray, moderately–firm, slightly carbonaceous, frequently pyritic, slightly calcareous, some silt.
	Some Siltstone – occasionally ranging to very fine Sandstone, clear–milky, generally well consolidated, slightly calcareous, siliceous in part, generally tightly cement, moderately sorted, sub–angular, NSFOC.
3450–3500	Shale – mostly as above, some slightly emerald green, slightly calcareous, moderately firm.
	Limestone – as above.

Some Siltstone – as above.

Trace Sandstone very fine grained, clear–milky, some spotty dark brown oil stain, very weak dull yellow fluorescence and weak dull yellow streaming cut. Moderately well consolidated, moderately well sorted, slightly calcareous, sub–angular, some fair–good intergranular porosity.

3500–50 Sandstone very fine grained, occasionally fine grained, clear–milky, slightly calcareous in part, moderately unconsolidated, moderately well sorted, sub–angular to sub–round, fair–good intergranular porosity, some pinpoint dark brown oil stain, very faint dull yellow fluorescence and weak–fair dull yellow milky–slow streaming cut.

Some Shale – light–medium gray, moderately soft–moderately firm, slightly–moderately calcareous.

3550–3600 Dolomite–Limy Dolomite – medium tan to medium–dark brown, crypto–crystalline, dense, moderately firm.

Shale – light–medium gray, as above.

Limestone – light tan–buff, as above.

3600–50 Dolomite–Limy Dolomite – as above.

Some Shale – as above.

3650–3700 Shale – frequently slightly greenish tinge, light–medium gray, moderately firm, slightly calcareous, sub–blocky in part.

Limestone–Dolomitic Limestone – generally light tan–frequently moderately–dark brown, cryptocrystalline, moderately firm, dense.

Some Siltstone – clear–milky–slightly white in part, generally hard, frequently siliceous, well consolidated, slightly–moderately calcareous, some carbonaceous specks, NSFOC.

3700–50 Shale – as above.

Limestone–Dolomitic Limestone – generally as above, mostly cream–buff–light tan.

Sandstone very fine grained grading to Siltstone – generally clear–milky, slightly–moderately calcareous in part, generally well consolidated, moderately sorted, sub–angular, siliceous in part, no apparent porosity, NSFOC.

3750–3800 Limestone – buff–light tan, frequently cream, cryptocrystalline, moderately firm, dense, frequently ostracods, possibly some pellets.

Shale, Siltstone, and Sandstone – as above.

3800–50 Limestone – buff–tan–light brown as above, just trace of ostracods.

Siltstone occasionally grading to very fine Sandstone – clear–milky, occasionally slightly white, generally well consolidated, hard–firm, commonly siliceous, no apparent porosity, NSFOC.

3850–80 Sandstone extremely fine grained commonly grading to Siltstone, generally well consolidated, slightly–moderately calcareous, clear–milky–slightly white in part, moderately well sorted, sub–angular to sub–round, generally no apparent porosity, NSFOC.

3880–3900 Shale – light–medium gray, frequently grayish tan, slightly–moderately calcareous, moderately firm–moderately soft.

Sandstone – very fine grained, clear–milky, slightly calcareous in part, generally moderately consolidated, slightly friable in part, moderately well sorted, sub–angular to sub–round, trace pinpoint dark brown oil stain, some dull yellow fluorescence, weak bright yellow milky cut.

3900–20 Limestone – buff–slightly cream in part, cryptocrystalline, firm, dense, some pellets and unidentifiable particles.

3920–40 Limestone – as above.

Shale – light gray commonly light emerald, slightly calcareous, moderately firm.

Some Sandstone as above, but slightly more pinpoint dark brown oil stain, with show as above.

3940–60	Limestone – light tan–buff, cryptocrystalline–occasionally microcrystalline, firm, dense, frequently ostracods, possibly some pellets.
	Shale – light gray, occasionally slightly emerald, slightly calcareous, moderately firm, abundant Pyrite in part, silty in part.
	Some Siltstone – clear–milky–slightly white in part, hard–firm, siliceous in part, slightly–moderately calcareous, frequently pyritic.
3960–80	Shale – light–medium gray, moderately firm–moderately soft, slightly calcareous, slightly carbonaceous in part, commonly pyritic, slightly silty in part.
	Some Siltstone – as above.
3980–4000	Siltstone – occasionally grading to very fine Sandstone as above, NSFOC, trace Pyrite.
	Some Shale as above – trace Pyrite.
4000–20	Shale – light gray, moderately firm, slightly calcareous, sub–blocky, frequently pyritic.
4020–40	Shale – generally light gray as above, frequently tan–medium brown Shale, slightly calcareous, firm–moderately firm, sub–blocky in part.
	Dolomite–Limy Dolomite – tan–orangish tan, cryptocrystalline, moderately soft–moderately firm, slightly–moderately carbonaceous.
4040–60	Shale – light gray–slightly emerald–tannish gray, as above.
	Some Siltstone – as above.
4060–90	Shale – light gray–slightly emerald, as above.
	Siltstone – as above.
4090–4120	Sandstone – very fine grained commonly ranging to Siltstone, commonly light brown stain with oil globules coating grain cluster, very weak dull yellow fluorescence in part, fair–good bright yellow flash–streaming cut, generally moderately consolidated–unconsolidated, moderately well

sorted, sub–angular to sub–round, fair–good intergranular porosity, but extremely fine grained. Best show in well to this point.

Shale – light gray–cream–very slightly emerald, slightly calcareous, moderately soft, sub–blocky in part.

4120–50 Shale – as above, silty in part.

Siltstone – milky–light white in part, moderately firm–moderately hard in part, siliceous in part, slightly calcareous, frequently slightly argillaceous, well consolidated, NSFOC.

Some Sandstone as above, probably cavings.

4150–80 Shale – tan–light gray–slightly emerald, moderately firm–moderately soft, slightly–moderately calcareous, sub–blocky in part, occasionally pyritic.

Some Siltstone as above, frequently Siltstone ranging to very fine Sandstone with pinpoint dark brown oil stain, very weak faint dull yellow fluorescence, and very weak–weak slow bright yellow streaming cut, moderately consolidated to unconsolidated, frequently friable, moderately sorted, slightly calcareous in part, poor–fair intergranular porosity, extremely fine grained. May be cavings.

4180–4210 Shale – light–medium gray, very slightly emerald in part, as above.

Siltstone – as above, NSFOC.

Limestone – buff–light tan, cryptocrystalline, moderately firm, dense, frequently ostracods.

4210–4240 Shale – generally medium gray, occasionally dark gray, moderately soft–occasionally moderately firm, slightly–moderately calcareous, slightly carbonaceous, sub–blocky in part.

4240–70 Shale – generally medium gray–frequently brownish gray–medium brown, moderately firm–moderately soft, slightly–moderately calcareous, frequently pyritic, sub–blocky, slightly carbonaceous.

4270–4300	Shale – light–medium gray–slightly emerald as above, frequently dark brown–black petroliferous Shale – soft–moderately soft, moderately–slightly calcareous, highly carbonaceous. Some Siltstone – clear–milky–slightly white in part, generally firm–moderately hard, slightly calcareous, siliceous in part, dense, NSFOC. Some Limestone – light tan–buff, cryptocrystalline, moderately firm, dense, frequently ostracods, trace pellets.
4300–60	Siltstone – as above. Shale – as above.
4360–90	Siltstone – occasionally ranging to very fine Sandstone – clear–milky–frequently white, generally well consolidated, firm–moderately hard, frequently siliceous, slightly–moderately calcareous, moderately sorted, generally no apparent porosity, trace pinpoint dark brown oil stain, no fluorescence, very weak milky dull yellow cut, argillaceous in part, occasional Pyrite. Some Shale – cream–light gray, moderately soft, slightly–moderately calcareous, occasionally pyritic.
4390–4420	Shale – medium gray, moderately firm–moderately soft, slightly calcareous, sub–blocky. Some Siltstone as above, NSFOC.
4420–50	Shale – as above, also frequently dark gray–black Shale, moderately firm–highly carbonaceous–petroliferous, slightly calcareous. Limestone – light tan, cryptocrystalline, moderately firm, occasionally siliceous, dense, frequently ostracods, pellets, trace pisolites. Some Siltstone – as above.
4450–80	Siltstone – clear–milky, firm–moderately hard, commonly siliceous, slightly–moderately calcareous, dense, well consolidated, NSFOC. Limestone – as above.

	Shale – light–medium gray–slightly emerald, as above.
4480–4510	Sandstone very fine grained commonly ranging to Siltstone – generally milky–slightly white, moderately well consolidated, slightly calcareous, slightly argillaceous in part, moderately well sorted, sub–angular to sub–round, fair porosity, NSFOC.
4510–40	Sandstone very fine grained commonly ranging to Siltstone – generally as above, but poorer sorting, more argillaceous, frequently specks of carbonaceous material, some Pyrite, trace Glauconite, NSFOC.
4540–70	Shale – light–medium gray, frequently slightly emerald tinge, moderately firm–moderately soft, slightly calcareous.
	Siltstone – generally milky–slightly white, slightly–moderately calcareous, moderately firm–hard, siliceous in part, specks of carbonaceous material, some Pyrite.
4570–4600	Shale as above, frequently pyritic.
	Some Limestone–Dolomitic Limestone – medium brown, cryptocrystalline, moderately firm, dense.
4600–20	Shale – light–medium gray, occasionally light emerald tinge, slightly–moderately calcareous, moderately firm–moderately soft, frequently pyritic.
	Siltstone – as above.
	Some Limestone–Dolomitic Limestone – as above.
4620–40	Shale – as above.
	Siltstone – as above.
4640–60	Shale – tannish gray, light–medium gray, moderately firm–moderately soft, slightly–moderately calcareous, frequently pyritic.
	Some Limestone – light tan–buff, cryptocrystalline, moderately firm, dense, commonly ostracods.

Some Siltstone – as above.

4660–80 Shale – light–medium gray–frequently slightly emerald, moderately firm–moderately soft, slightly–moderately calcareous.

Siltstone – milky–slightly white, generally firm–frequently hard, frequently siliceous, slightly–moderately calcareous, slightly argillaceous in part, frequently pyritic.

Some speck carbonaceous material, trace Glauconite, NSFOC.

4680–4700 Shale – light–medium gray frequently slightly emerald tinge, also commonly dark brown, slightly calcareous, highly carbonaceous, moderately firm.

Some Limestone – buff–light tan, occasionally clear spar calcite, cryptocrystalline–microcrystalline, moderately firm–dense, commonly pelletoidal, frequently ostracods.

4700–20 Shale – light–medium gray, moderately firm to moderately soft, slightly–moderately calcareous, silty in part, frequently specks of carbonaceous material, some Pyrite.

4720–40 Shale – as above.

Siltstone ranging to very fine grained Sandstone – frequently light brown oil stain, with specks of dark brown oil on some clusters, some black dead oil, very weak dull yellow fluorescence, fair bright yellow halo–slow streaming cut, generally well consolidated, firm–moderately firm, slightly calcareous, moderately well sorted, sub–angular to sub–round, very poor intergranular porosity – tight, very poor matrix porosity.

Shale – as above.

4740–60 Shale – light–medium gray, moderately soft, slightly–moderately calcareous, slightly pyritic.

Siltstone occasionally ranging to very fine Sandstone – clear–milky–slightly white, generally well consolidated, slightly calcareous, moderately well sorted sub–angular to sub–round, mostly no show, some show as above, probably cavings.

4760–80	Sandstone – very fine grained commonly grading to Siltstone, generally light tan even oil stain, some pinpoint medium brown oil stain, some dull yellow fluorescence, weak dull yellow milky cut. Generally moderately unconsolidated, friable in part, slightly calcareous, moderately well sorted, sub–angular to sub–round, fair–good intergranular porosity, extremely fine grained. E–Logs indicate this all cavings.
	Shale – light–medium gray, as above.
4780–4800	Shale – light–medium gray, occasionally brownish gray, moderately firm–moderately soft, slightly–moderately calcareous, sub–blocky, in part.
	Siltstone – milky–clear–silty white, generally firm–hard, frequently siliceous, slightly–moderately calcareous, well consolidated, NSFOC.
4800–20	Shale – light–medium gray, frequently dark tan, moderately firm–moderately soft, slightly–moderately calcareous, moderately–highly carbonaceous in part, commonly sub–blocky, trace petroliferous material.
4820–40	Limestone – buff–light tan, cryptocrystalline, moderately firm, dense, trace clear spar calcite, trace pellets.
	Shale – mixture of light–medium gray, slightly emerald–dark brown and moderately–highly carbonaceous, as above.
4840–60	Shale – light–medium gray, moderately firm, occasionally moderately soft, slightly–moderately calcareous, frequently pyritic, commonly sub–blocky, silty in part.
	Some Siltstone as 4780–4800'.
4860–80	Shale – as above.
	Siltstone – as above, but decided increase in quantity.
4880–4900	Shale – light–medium gray, frequently slightly emerald, medium brown, moderately soft–slightly firm in part, slightly–moderately calcareous, slightly–moderately carbonaceous in part.
	Siltstone – milky–slightly white in part, moderately calcareous, generally well consolidated, firm–moderately firm, siliceous in part, NSFOC.

4900–20	Shale – light–medium gray, slightly calcareous, moderately firm–moderately soft, sub–blocky in part, slightly carbonaceous, silty in part.
	Siltstone – milky–slightly white, occasionally clear, moderately calcareous, generally well consolidated, firm–hard, frequently siliceous, trace of carbonaceous specks, trace Pyrite, dense, NSFOC.
4920–40	Shale – as above, frequently medium–dark brown, slightly calcareous, moderately–highly carbonaceous, moderately firm, sub–blocky in part.
	Some Siltstone, as above.
4940–60	Shale – dark gray–dark brownish gray–frequently black, slightly–moderately calcareous, moderately–highly carbonaceous, petroliferous in part, moderately firm–moderately soft, sub–blocky in part.
4960–80	Shale – as above.
	Limestone – light tan–occasionally medium brown, cryptocrystalline, moderately firm–moderately soft, slightly argillaceous in part, dense.
4980–5000	Shale – generally light gray, frequently medium gray, moderately soft, slightly–moderately calcareous.
	Siltstone as 4900–4920' above.
5000–20	Shale – light–medium gray commonly with slightly emerald tinge, frequently medium brown–grayish brown, moderately soft–moderately firm, slightly calcareous, sub–blocky in part, silty in part.
	Some Siltstone – as above.
5020–60	Shale – cream–slightly gray, frequently very slightly emerald, slightly calcareous, moderately soft,–moderately firm, sub–blocky in part, frequently pyritic, silty in part.
	Some Siltstone – as above.
5060–80	Sandstone very fine grained ranging to Siltstone – frequently light tan oil stain, some oil globules on clusters, no fluorescence, very weak–weak dull yellow milky–slow streaming cut. Generally moderately

	unconsolidated, friable in part, slightly calcareous, moderately well sorted, sub–round to sub–angular, some fair intergranular porosity but extremely fine grained.
	Shale – as above.
5080–5100	Sandstone – as above.
	Shale – as above.
	Siltstone – as above, NSFOC.
5100–20	Shale – as above.
	Siltstone – as above.
	Some Sandstone – as above, probably cavings.
5120–40	Shale – cream–light gray–frequently medium gray, slightly–moderately calcareous, sub–blocky, moderately soft–moderately firm.
	Limy Dolomite–Dolomite – orangish brown, medium brown, cryptocrystalline, moderately firm–moderately soft in part, slightly carbonaceous, probably cavings.
	Poor Sample.
5140–80	Shale – light–medium gray, frequently very slight tinge of emerald, moderately soft, slightly calcareous, trace Pyrite, silty in part.
	Some Siltstone – clear–milky, slightly–moderately calcareous, slightly argillaceous in part, generally well consolidated, occasionally speck of carbonaceous material, some Pyrite.
5180–5200	Shale – medium–dark gray, frequently black and highly carbonaceous to slightly petroliferous in part, moderately firm–moderately soft, slightly–moderately carbonaceous, sub–blocky in part, trace Pyrite.
5200–60	Shale – as above.

Sandstone very fine grained occasionally grading to Siltstone, generally light–medium brown stain, common dark brown oil globules on grains, no fluorescence, weak–fair slow streaming bright yellow cut, slightly calcareous, moderately well consolidated, moderately well sorted, sub–round to sub–angular, slightly friable in part, some fair intergranular porosity, trace Pyrite, possibly cavings.

5260–90 Shale – generally medium gray, frequently dark gray, moderately soft, occasionally moderately firm, slightly–moderately calcareous, slightly carbonaceous, frequently pyritic, frequently oil coated Shale fragments which is caused by contamination.

5290–5320 Shale – mostly light–medium gray, slightly calcareous, slightly–moderately carbonaceous, moderately soft, silty in part, frequently pyritic, commonly some black Shale – moderately soft, bronze tinge in part from much microcrystalline Pyrite, slightly calcareous, highly carbonaceous–petroliferous. Oil coating some of these fragments.

5320–50 Shale – black with bronze cast–dark brownish gray, moderately soft, moderately firm, highly carbonaceous–petroliferous, non–calcareous to slightly calcareous, abundant Pyrite, sub–blocky in part.

5350–80 Shale – generally as above, but mostly dark gray–dark brownish gray.

5380–5410 Shale – as 5320–50' above, silty in part.

Some Siltstone, light gray, frequently argillaceous, slightly–moderately calcareous, frequently streaks–specks of carbonaceous material, moderately firm–moderately soft, some Pyrite, NSFOC.

5410–40 Shale – as 5350–5380' above.

5440–60 Shale – cream–light gray, occasionally buff, moderately soft–moderately firm, slightly–moderately calcareous, frequently specks of carbonaceous material, silty in part.

Some Sandstone – fine–very fine grained, clear–milky, moderately unconsolidated, slightly friable in part, moderately well sorted, sub–angular to sub–round, slightly calcareous in part. Faint–weak light brown oil stain in part, frequently oil droplets and pinpoint speck on grains,

	contains much dull gold fluorescence, good bright yellow flash–streaming cut. Some fair–good intergranular porosity.
5460–80	Sandstone – as above.
5480–5500	Shale – light gray, frequently slightly emerald tinge, commonly cream, moderately soft, slightly–moderately calcareous, slightly carbonaceous in part. Sandstone – as above, probably cavings. Some Siltstone – as above, NSFOC.
5500–20	Shale – light gray, frequently cream, slightly calcareous, moderately firm–moderately soft, slightly carbonaceous, frequently pyritic, silty in part. Siltstone – white–slightly gray, slightly–moderately calcareous, well consolidated, frequently slightly argillaceous, commonly pyritic, some specks of carbonaceous material.
5520–40	Siltstone – cream–light gray, generally hard–firm, slightly calcareous, argillaceous in part, frequently specks of carbonaceous material, abundant Pyrite, NSFOC, trace Glauconite. Shale – light–medium gray, brownish gray, slightly calcareous, moderately firm, frequently very small specks of carbonaceous material, commonly silty, sub–blocky.
5540–80	Shale – as above, some black Shale as above, probably cavings. Siltstone – as above.
5580–5640	Siltstone – grading to very fine grained Sandstone – some fine grained Sandstone – clear–milky–slightly gray in part, moderately well–well consolidated, slightly calcareous, moderately firm, moderately–poorly sorted, slightly argillaceous in part, sub–angular to sub–round, no apparent porosity, NSFOC, some specks of carbonaceous material in part, some Pyrite, slight show in part, but considered contamination.

Shale – light gray–cream, frequently medium gray, moderately soft, slightly–moderately calcareous, frequently very small specks of carbonaceous material.

5640–60 Siltstone ranging to very fine–fine Sandstone – as above.

Shale – as above, also commonly dark gray–black Shale.

Sample highly mixed and probably much caving.

5660–80 Sandstone fine–very fine grained, clear–milky, unconsolidated–moderately unconsolidated, slightly calcareous in part, moderately well sorted, sub–angular to sub–round, some Pyrite, some specks of carbonaceous material, generally no apparent porosity, possibly some poor–fair intergranular porosity, no stain, dull yellow fluorescence, very weak bright yellow milky–slow streaming cut, some Pyrite.

Some Siltstone – as above.

Some Shale – light–medium gray, occasionally cream, moderately soft, silty in part, slightly calcareous, some Pyrite.

5680–5700 Shale – as above.

Siltstone – as above.

TOTAL DEPTH – 5700' (Driller).

WELL REPORT

MONUMENT BUTTE FIELD
Balcron Oil Co. 24–12J Monument Butte–Federal
539' FSL, 1777' FWL, Sec. 12, T9S–R16E
Duchesne County, Utah
43-013-31409

CONFIDENTIAL

By

DENNIS REHRIG & ASSOCIATES, INC.

Oil & Gas Consulting

4924 Rimrock Road
Billings, Montana 59106

(406) 656–4785

MICROFICHE

WELLSITE GEOLOGIST'S REPORT

MONUMENT BUTTE FIELD
Balcron Oil Co. 24-12J Monument Butte-Federal
539' FSL, 1777' FWL, Sec. 12, T9S-R16E
Duchesne County, Utah

DENNIS REHRIG & ASSOCIATES, INC.

Oil & Gas Consulting

4924 Rimrock Road
Billings, Montana 59106

(406) 656-4785

DENNIS C. REHRIG & ASSOCIATES, INC.
Oil & Gas Exploration
4924 RIMROCK ROAD • BILLINGS, MONTANA 59106 • (406) 656-4785

MONUMENT BUTTE FIELD
Balcron Oil Co. 24-12J Monument Butte-Federal
539' FSL, 1777' FWL, Sec. 12, T9S-R16E
Duchesne County, Utah

TABLE OF CONTENTS

By:
DENNIS C. REHRIG
Consulting Geologist
For:
DENNIS C. REHRIG & ASSOCIATES, INC.

Balcron Oil Co. 24-12J Monument Butte-Federal
539' FSL, 1777' FWL, Sec. 12, T9S-R16E
Duchesne County, Utah

GENERAL REVIEW

The Balcron Oil Co. 24-12J Monument Butte-Federal (SE¼SW¼ S-12, T9S-R16E, Duchesne County, Utah) was drilled as an infill development well in the Monument Butte Field.

This well was supported by extensive subsurface offset well control and drilled for future water flood control and identification of anticipated additional Douglas Creek and Wasatch Tongue oil sands.

The surface hole was air drilled and surface casing was set prior to moving Union Drilling Co. Rig No. 17 on location and spudding on December 3, 1993. A two-man mud logging unit and wellsite geologist were on site from 1400' to total depth. The Green River and Douglas Creek formations were penetrated at 1466' and 4568' making them respectively 42' high and 51' high structurally to the offset G. S. Campbell 4 Government-C&O (NE¼SW¼ S-12, T9S-R16E) control well.

Numerous sandstone zones starting at 2682' appear prospective based on mud-log, sample shows, and/or E-logs. All sandstones which had significant gas and/or visual shows are noted elsewhere in this report.

This well was drilled to 5700' (Driller) and 5704' (Logger).

Subsequent to log review the operator elected to run 5½" production casing to total depth.

The rotary was released 12/9/93.

Respectfully submitted,

DENNIS C. REHRIG

Balcron Oil Co. 24-12J Monument Butte-Federal
539' FSL, 1777' FWL, Sec. 12, T9S-R16E
Duchesne County, Utah

WELL DATA

OPERATOR:	Balcron Oil Company
LEASE & WELL NO.:	Monument Butte-Federal 24-12J
LOCATION:	539' FSL, 1777' FWL, Sec. 12, T9S-R16E
PROSPECT/FIELD:	Monument Butte Field
COUNTY:	Duchesne
STATE:	Utah
BASIN:	Uintah
WELL TYPE:	Development
BASIS FOR PROSPECT:	Subsurface well control
ELEVATIONS:	G.L. 5495', K.B. 5505'
SPUD DATE:	7:30 PM (MST) 12/3/93 (Rotary)
OUT FROM UNDER SURFACE CASING:	7:30 PM (MST) 12/3/93 (Surface casing previously set)
DRILLING COMPLETED:	8:15 AM (MST) 12/8/93
LOGGING COMPLETED:	7:45 PM (MST) 12/8/93
RIG RELEASE:	5:00 PM (MST) 12/9/93
TOTAL DAYS SPUD THROUGH LOGGING:	6 days
TOTAL DEPTH:	5,700' (Driller) 5,704' (Logger)
TOTAL DRILLING DAYS:	6 days (Surface casing previously set)

HOLE SIZE & CASING:	Hole Size 12¼" Surface to 286' 7⅞" 286' to T.D.	Casing Size 8⅝" surface to 286' K.B. 5½" Production Casing to 5,685' K.B.
WELL STATUS:	Cased for completion attempt in Douglas Creek.	
PENETRATION:	284' below Carbonate Marker.	
COMPANY DRILLING CONSULTANT:	Al Plunkett	
DRILLING CONTRACTOR:	Union Drilling Co.	
RIG NO.:	17	
TOOLPUSHER:	Dave Gray	
RIG SPECIFICATIONS:	Draw Works – Cabot–Franks, powered by one D–343 Diesel Cat Derrick – Cabot–Franks, 97' mast.	
BLOW OUT PREVENTER:	Make: Cameron. Type 10" x 5000 lbs. Drill Pipe: Size: 4½" OD, 2¼" ID, Thread: XO. BHA: Length 557', 18 jts–6" DC. Tool joints: 6¼" OD, Type – XO.	
MUD PUMP:	No. 1 – Gardner–Denver–FXN, 14" Stroke, 5½" liner.	
MUD COMPANY:	Unibar Drilling Fluids, Inc. Operator bought products and drilling contractor mixed as needed.	
MUD PROGRAM:	Air/Foam 286' – Total Depth. Loaded hole with KCl/water for E–logs.	
ELECTRIC OPEN–HOLE LOGGING PROGRAM:	Halliburton Logging Services, Inc. Engineer: Kirk Evatt Witnessed by: Dennis Rehrig and Al Plunkett – Dual Laterolog Micro–Guard, w/Gamma Ray, Caliper and Tension Curves (278'–5702') – Spectral Density/Dual Spaced Neutron (2500'–5659')	
LOST CIRCULATION ZONE OR DRILLING PROBLEMS:	Had some gas flow starting @ 2650' which probably masked mud–log readings for remainder of hole, but presented no drilling problems.	
WELLSITE GEOLOGIST:	Dennis C. Rehrig	

SAMPLING PROGRAM:	50' Samples from 1,400'–3,850'. 20–30' Samples from 3,850'–Total Depth, Caught 20' samples except when penetration was extremely fast, then caught 30' samples.
SAMPLE QUALITY:	Generally fair but fluid intermittently loading hole the bottom 1700' caused sample quality problems at times.
SAMPLE DISPOSITION:	Utah Geological Survey – Salt Lake City, Utah
MUD LOGGING EQUIPMENT:	K–Tech – two man unit operated by John Kuykendall and George Nichols.
CORE PROGRAM:	None.
DRILL STEM TEST:	None.
SURFACE CASING:	8⅝" Surface – 256' K.B. Surface hole drilled and casing set by small air–impact rig, details of casing and cement not available for this report.
PRODUCTION CASING:	Ran 128 jts 5½" casing to 5685' K.B. Cemented w/200 sxs lead Ultra–lite and 240 sxs 50–50 Poz. Plug down @ 1:00 PM 12/9/93.

Balcron Oil Co. 24-12J Monument Butte-Federal
539' FSL, 1777' FWL, Sec. 12, T9S-R16E
Duchesne County, Utah

DAILY DRILLING HISTORY

Daily drilling reports taken primarily from Rig Tower Sheets and supplemented by Drilling Supervisor.
Day commenced at 6:00 AM (MST) day of prior day of report and ends at 6:00 AM (MST) day of report.

Days Since Spud	1993 Date	Depth	Ftg in Last 24 Hrs	Activity (hrs) Drlg	Maint. and Repairs	Other	Bit No.	W O B (M)	RPM	PP	Activity
1	12/4	658'	372'	8.00	3.25	12.75	1	45	55	110/200	Move and rig up, pressure test, PU DC's, work on booster, drilling cement, drilling 7⅞" hole with air and foam, service rig and pumps, work on booster, drilling, change air head rubber, drilling.
2	12/5	2338'	1680'	21.75	0.50	1.75	1	45	50	210	Drilling, survey, service rig and operate pipe rams, drilling, survey, drilling, survey, service rig, drilling, survey.
3	12/6	3582'	1244'	22.25	0.50	1.25	1	45	50	230/260	Survey, check pipe rams, drilling, service rig and pumps, survey, drilling, service rig, survey, drilling.
4	12/7	4698'	1116'	21.25	1.00	1.75	1	45	50	270	Drilling, survey, service rig, close and open pipe rams, drilling, service rig and pump, drilling, clean hole for survey, survey, service rig, drilling.

Days Since Spud	1993 Date	Depth	Ftg in Last 24 Hrs	Activity (hrs) Drlg	Maint. and Repairs	Other	Bit No.	W O B (M)	RPM	PP	Activity
5	12/8	5627'	929'	19.75	0.25	4.00	1	45	50	310	Drilling, run survey, trip 4 stds out to unload hole, service rig, open and close rams, TIH – blow water to bottom, drilling, clean and circ hole w/air and foam, survey, clean and circ hole, drilling, service rig, drilling.
6	12/9	5700'	73'	2.25	0	21.75	1	45	30	310	Drilling, circ hole on air, put mud pump on hole, condition and circ hole for E–logs, TOH, RU loggers and log well, TIH w/DC's and 41 stds DP, RU laydown line and tubs, LD DP, TIH, LD DP and DC's, clean floor off, change casing heads, wait on tester, RU to test casing, test stack, RU to run casing and run 5½" production casing.
7	12/10	5700'	0'	–	–	11.00	–	–	–	–	Run 5½" casing, cement, WOC, release rig @ 5:00 PM 12/9/93.

Balcron Oil Co. 24-12J Monument Butte-Federal
539' FSL, 1777' FWL, Sec. 12, T9S-R16E
Duchesne County, Utah

SURVEYS VERTICAL HOLE

Drilling Depth	Degrees
380'	1°
800'	1°
1300'	¾°
1800'	¾°
2300'	2°
2800'	2°
3300'	1¾°
3800'	2°
4300'	3°
4800'	2½°
5050'	3°

Balcron Oil Co. 24–12J Monument Butte–Federal
539' FSL, 1777' FWL, Sec. 12, T9S–R16E
Duchesne County, Utah

BIT RECORD

Contractor: Union Drilling Co. **Operator:** Balcron Oil Co. **Lease:** Federal **State:** Utah **County:** Duchesne **Sec/T–ship/Range:** SESW Sec. 12, T9S–R16E	**Rig No.** 17 **Field:** Monument Butte **Well No.** 24–12J	**Rig Make:** Cabot–Franks **Derrick:** Cabot–Franks 97' mast **Pump #1:** Gardner–Denver–FXN Liner 5½" x 14"	**Collars: ODxIDxLength BHA** 6" x 2¼" x 557' **Drill Pipe–Size Wt** 4½" 16.6 E **Tool Joint:** 6¼"	**SPUD** (for 7⅞" hole) 12/3/93 **Under Surface** (rotary) 12/3/93 **Total Depth** 12/8/93 **Total Days Drilling** 6	**Toolpusher/Drillers** Dave Gray Scott Cawdinski Bill Satterfield Jeff White Chris Chapman **Operators Representative** Al Plunkett **Mud Type:** Air/Foam

Bit No	Bit Size	Bit Mfgr	Bit Type	Jet Size 32nds	Ser. No.	Depth Out	Feet	Hrs	Ft/ Hr	Cum Hrs	Wt 1000#	Rotary RPM	Vert Dev	Pump Press	PUMPS			MUD		DULL COND			Remarks Date, Formation, etc.
															No	Liner ID	SPM	Wt	Vis	T	B	G	
1	7⅞	STC	F45A	Open	KW9965	5700'	5414	61	88.8	61	45	45/55	3°	Drilled with air & foam									

BALCRON OIL 24-12J MONUMENT BUTTE-FEDERAL
539' FSL 1777' FWL, SECTION 12, T 9 S-R 16 E
DUCHESNE COUNTY, UTAH

TIME/DEPTH PENETRATION CURVE

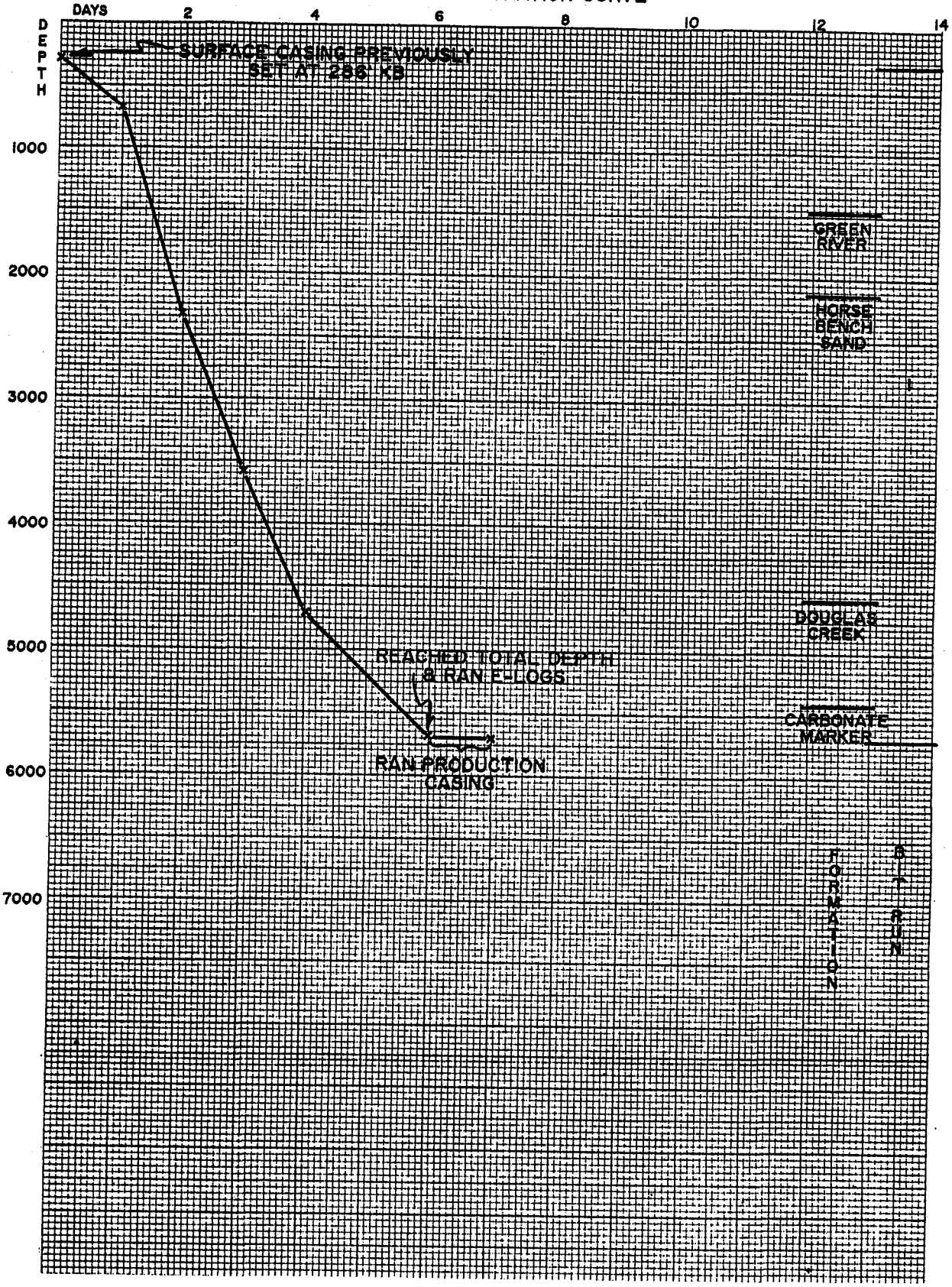

Balcron Oil Co. 24-12J Monument Butte-Federal
539' FSL, 1777' FWL, Sec. 12, T9S-R16E
Duchesne County, Utah

FORMATION TOPS

ELEVATIONS: G.L. 5495', K.B. 5505'

	E-Log Top	Subsea Datum	Structural Relationship To Reference Wells *
Green River	1466'	(+4039')	42' Hi
Horsebench Sand	2122'	(+3383')	59' Hi
2nd Garden Gulch	3773'	(+1732')	58' Hi
Yellow Marker	4403'	(+1102')	58' Hi
Douglas Creek	4568'	(+ 937')	51' Hi
2nd Douglas Creek Mkr	4802'	(+ 703')	59' Hi
Green Marker	4944'	(+ 561')	66' Hi
Carbonate Marker	5420'	(+ 85')	NDE
TOTAL DEPTH:	5704' Logger		

* Reference Well:

G. S. Campbell 4 Government C&O
NE¼SW¼ Sec. 12, T9S-R16E
Duchesne County, Utah

NOTE: Correlations and nomenclature that used by operator.

Balcron Oil Co. 24-12J Monument Butte-Federal
539' FSL, 1777' FWL, Sec. 12, T9S-R16E
Duchesne County, Utah

REFERENCE WELL E-LOG FORMATION BOREHOLE AND SUBSEA DATUMS

G. S. Campbell
4 Government - C&O
NE¼SW¼ Sec. 12, T9S-R16E
Duchesne County, Utah

K.B. 5462'

Formation		
Green River	1465'	(+3997')
Horsebench Sand	2138'	(+3324')
2nd Garden Gulch	3788'	(+1674')
Yellow Marker	4418'	(+1044')
Douglas Creek	4576'	(+ 886')
2nd Douglas Creek Mkr	4818'	(+ 644')
Green Marker	4967'	(+ 495')
Carbonate Marker	NDE	
TOTAL DEPTH	5348' (Logger)	

NOTE: Correlations and nomenclature that used by operator.

Balcron Oil Co. 24–12J Monument Butte–Federal
539' FSL, 1777' FWL, Sec. 12, T9S–R16E
Duchesne County, Utah

SIGNIFICANT GAS KICKS AND/OR SHOWS

As reported by Mudlogger

Formation	Sample Depth	Time (Before–During–After) Min/Ft	Total Gas (Before–During–After)	
Horsebench Sand	2647'–2657	1.2 – 1.3 – 1.1	30–600–510	
Horsebench Sand	3530'–3540'	.8 – .4 – .7	710–930–640	
2nd Garden Gulch	4106'–4120'	1.0 – .5 – 1.0	380–380–380	Gas probably masked by gas from above.
2nd Garden Gulch	4306'–4332'	1.3 – .7 – 1.5	350–350–350	Gas probably masked by gas from above.
Douglas Creek	4724'–4736'	1.6 – .6 – 1.1	360–410–360	
Carbonate Marker	5462'–5483'	1.0–.7–.8	200–160–180	Gas erratic due to hole loading w/fluid.

NOTE: After gas flow at approximately 2650' gas reading appeared to be masked for rest of hole. Had much intermittent fluid loading hole in bottom approximate 700' of hole which caused sample quality and gas reading problems at times.

POTENTIAL SANDSTONE ZONES

Provided by Wellsite Geologist

E–Log Depth (Spectral Density/Dual Spaced Neutron Log)

2682'–2710'	
3541'–3545'	
3848'–3882'	Gross interval.
4080'–4086'	
4118'–4125'	
4311'–4322'	
4718'–4729'	
5020'–5026'	
5045'–5050'	
5187'–5196'	
5466'–5486'	

NOTE: Sandstone not always seen in samples due to sample quality or thinness of sandstone in some cases, also in lower portion of hole particularly, Sandstone with oil shows is present in samples but not confirmed by E–logs. Frequently, E–logs do not confirm samples. Hole loading with cuttings and fluid during connections are the primary causes of poor samples at times. Also once well penetrated some oil zones, most samples were partially–moderately contaminated with oil or an oily film.

Balcron Oil Co. 24-12J Monument Butte-Federal
539' FSL, 1777' FWL, Sec. 12, T9S-R16E
Duchesne County, Utah

SAMPLE DESCRIPTIONS

By: Dennis C. Rehrig

Samples caught and lagged from trap of blue line by Mud Loggers. Samples were examined wet, under reflected light and 3x magnification from 1400' to total depth, for porosity identification samples were dried. Sample descriptions only tie moderately well or not at all to drill time log. This was due to air/foam drilling and rapid penetration rates. Sample quality was generally fair-good, except intermittent fluid loading the hole the bottom approximately 700' did present sample quality problems at times. All sample descriptions are interpretive and not tied to E-logs.

1400-50	Siltstone frequently grading to very fine grained Sandstone - clear-milky, occasionally cream, moderately calcareous, some specks of carbonaceous material, generally well consolidated, moderately hard-firm, no apparent porosity, NSFOC, frequently pyritic, some lithic particles.
	Shale - light-medium gray, frequently brownish gray, moderately firm-moderately soft, moderately calcareous, sub-blocky in part, frequently silty, moderately speckled with dark brown carbonaceous material.
1450-1500	Dolomite-Limy Dolomite - medium-dark brown, frequently orangish tan-olive tan, cryptocrystalline, firm, brittle in part, slightly argillaceous in part, moderately carbonaceous, frequently microcrystalline disseminated Pyrite, dull gold mineral fluorescence, no cut.
1500-50	Shale - medium-dark gray, occasionally dark brownish gray, slightly calcareous, firm-moderately firm, sub-blocky in part, moderately carbonaceous, frequently pyritic.
	Dolomite-Limy Dolomite - as above.
1550-1700	Dolomite-Limy Dolomite - as above.
1700-50	Dolomite-Limy Dolomite - abundant drab olive tan color, more argillaceous, abundant Pyrite.

1750–1800	Dolomite–Limy Dolomite – slightly orangish brown–medium brown, occasionally drab olive tan, cryptocrystalline, firm–moderately firm, slightly argillaceous in part, dense, frequently pyritic, moderately–highly carbonaceous, dull gold mineral fluorescence, no cut.
1800–50	Limy Dolomite–Dolomite – generally medium brown, frequently tan to light grayish tan, cryptocrystalline, firm–moderately soft, slightly argillaceous in part, slightly–moderately carbonaceous, frequently pyritic, dull gold mineral fluorescence in part, no cut.
1850–1900	Dolomite–Limy Dolomite – drab olive tan–medium to dark brown as 1750–1800' above.
1900–2000	Dolomite–Limy Dolomite – commonly medium brown, slightly orange in part to frequently brownish gray–drab olive tan as 1750–1800' above.
2000–50	Limy Dolomite–Dolomite – grayish tan–slightly drab olive tan, frequently medium brown, moderately firm, slightly argillaceous in part, occasionally pyritic, dense, cryptocrystalline, dull gold mineral fluorescence in part, no cut.
2050–2100	Dolomite–Limy Dolomite – drab olive tan–medium to dark brown–frequently orangish brown, slightly petroliferous in part, dull gold mineral fluorescence in part, very weak dull yellow milky cut, in part.
2100–50	Dolomite–Limy Dolomite – slightly orangish brown, medium brown–tan, cryptocrystalline, moderately firm occasionally moderately soft, slightly argillaceous in part, dense, occasional Pyrite, slightly–moderately carbonaceous.
2150–2200	Limy Dolomite–Dolomite – drab olive brown–medium to dark brown, cryptocrystalline occasionally microcrystalline, firm–moderately firm, slightly–moderately carbonaceous, dense.
	Some Siltstone – clear–milky–slightly cream, slightly–moderately calcareous, siliceous in part, well consolidated, generally moderately hard–firm, dense, slightly argillaceous in part.
	Some Shale – light–medium gray, slightly–moderately calcareous, moderately firm–moderately soft, sub–blocky in part.

Frequently Siltstone and very fine grained Sandstone, generally clear–milky, occasionally cream, slightly calcareous in part, slightly argillaceous in part, some lithic–carbonaceous fragments, frequently pyritic, generally well–moderately consolidated, occasionally friable, moderately well sorted, sub–angular to sub–round, generally tight, probably some fair intergranular porosity, trace pinpoint medium brown oil stain, some dull yellow fluorescence, weak streaming–milky bluish yellow cut.

Some Shale – light–medium gray, frequently silty, slightly–moderately calcareous, moderately firm, sub–blocky in part, frequently speckled with carbonaceous material, pyritic in part.

2660–2700 No sample available. Hole blowing gas.

2700–50 Sandstone – milky–clear, generally fine grained ranges to very fine grained, highly unconsolidated, highly friable, generally clean, generally well–moderately well sorted, sub–round to sub–angular, very faint tan oil stain in part, very faint dull yellow fluorescence, good bright yellow flash cut. Good intergranular porosity.

2750–2800 Sandstone – clear–milky, generally very fine grained, ranges up to fine grained, highly unconsolidated, friable, clean, well sorted, sub–round to sub–angular, good intergranular porosity. Generally no observable stain or fluorescence, trace very faint tan oil stain, no observable fluorescence, weak immediate bluish yellow milky–flash cut.

Some Dolomite–Argillaceous Dolomite – tan – medium–dark brown, frequently drab olive tan, cryptocrystalline, moderately firm, slightly moderately carbonaceous, dense.

2800–50 Dolomite–Argillaceous Dolomite – generally as above, some medium–dark gray highly carbonaceous–slightly petroliferous particles, dull yellow fluorescence, weak bluish yellow streaming cut.

2850–2900 Dolomite–Argillaceous Dolomite – as above.

Shale – light–medium gray, frequently dark gray, slightly–moderately calcareous, moderately firm–moderately soft, sub–blocky in part.

Sandstone – very fine grained commonly ranging to silt – clear – milky – light tan oil stain in part, weak dull faint yellow fluorescence, fair

bluish yellow streaming–milky cut. Entire sample appears to have oily film on cutting surfaces, may be mostly contaminated. Generally unconsolidated–moderately consolidated, friable in part, slightly calcareous in part, some fair intergranular porosity.

2900–50 Limestone–Argillaceous Limestone – buff–tan, cryptocrystalline, dense.

Shale – grayish tan, frequently dark brown specks carbonaceous material, moderately carbonaceous, slightly–moderately calcareous, frequently silty.

Some loose sand grains probably cavings from above. Show from entire sample. Appears to be patchy oily film on cuttings which is visible as sample dries, assume this is contamination.

2950–3000 Dolomite–Limy Dolomite – tan–medium to dark brown, occasionally black and petroliferous, cryptocrystalline, moderately firm–moderately soft, frequently argillaceous, moderately–highly carbonaceous, trace Pyrite, dull gold–yellow fluorescence, entire sample appears to be coated with oily film.

Note: Due to pervasive oily contamination, all fluorescence and cuts are suspect unless some oil stain is observed. Therefore no reference to fluorescence or cut will be made again in this report unless it is considered pertinent to a likely reservoir quality rock.

3000–50 Limestone–Dolomitic Limestone – grayish tan–buff–tan, cryptocrystalline, moderately firm occasionally moderately soft, dense, slightly argillaceous in part, slightly carbonaceous in part, frequently pyritic.

3050–3100 Shale – light–medium gray, frequently cream, moderately soft–moderately firm, sub–blocky in part, slightly–moderately calcareous, slightly carbonaceous in part, some Pyrite, frequently silty.

Siltstone ranging to very fine grained Sandstone – clear–milky frequently slightly cream, argillaceous in part, slightly calcareous, moderately well consolidated, some slightly friable Sandstone, moderately well sorted, sub–angular, NSFOC.

3100–50 Dolomite–Limy Dolomite – as above.

	Some Limestone–Dolomitic Limestone – cream–buff, as above.
3150–3200	Dolomite–Limy Dolomite – as above.
	Limestone–Dolomitic Limestone – as above.
	Sample highly contaminated by oil.
3200–50	Shale – medium–dark gray, slightly–moderately calcareous, moderately firm, sub–blocky, moderately carbonaceous, much dark tan–grayish tan Shale, moderately–highly calcareous, moderately firm, sub–blocky, highly pyritic, moderately carbonaceous.
	Limestone–Dolomitic Limestone – cream, buff–light tan, as above.
3250–3300	Shale – as above.
	Limestone – cream–buff, cryptocrystalline–frequently microcrystalline, moderately firm, slightly argillaceous in part, dense.
3300–50	Limestone – light tan–occasionally buff, mottled in part, moderately firm–moderately soft, dense, cryptocrystalline–microcrystalline, some unidentifiable particles possibly pellets, slightly argillaceous in part.
	Shale – medium–dark gray and grayish tan, as above.
3350–3400	Limestone – as above, trace Pyrite.
	Some Shale – as above.
3400–50	Shale – commonly medium gray, frequently light gray, moderately–firm, slightly carbonaceous, frequently pyritic, slightly calcareous, some silt.
	Some Siltstone – occasionally ranging to very fine Sandstone, clear–milky, generally well consolidated, slightly calcareous, siliceous in part, generally tightly cement, moderately sorted, sub–angular, NSFOC.
3450–3500	Shale – mostly as above, some slightly emerald green, slightly calcareous, moderately firm.
	Limestone – as above.

Some Siltstone – as above.

Trace Sandstone very fine grained, clear–milky, some spotty dark brown oil stain, very weak dull yellow fluorescence and weak dull yellow streaming cut. Moderately well consolidated, moderately well sorted, slightly calcareous, sub–angular, some fair–good intergranular porosity.

3500–50 Sandstone very fine grained, occasionally fine grained, clear–milky, slightly calcareous in part, moderately unconsolidated, moderately well sorted, sub–angular to sub–round, fair–good intergranular porosity, some pinpoint dark brown oil stain, very faint dull yellow fluorescence and weak–fair dull yellow milky–slow streaming cut.

Some Shale – light–medium gray, moderately soft–moderately firm, slightly–moderately calcareous.

3550–3600 Dolomite–Limy Dolomite – medium tan to medium–dark brown, crypto–crystalline, dense, moderately firm.

Shale – light–medium gray, as above.

Limestone – light tan–buff, as above.

3600–50 Dolomite–Limy Dolomite – as above.

Some Shale – as above.

3650–3700 Shale – frequently slightly greenish tinge, light–medium gray, moderately firm, slightly calcareous, sub–blocky in part.

Limestone–Dolomitic Limestone – generally light tan–frequently moderately–dark brown, cryptocrystalline, moderately firm, dense.

Some Siltstone – clear–milky–slightly white in part, generally hard, frequently siliceous, well consolidated, slightly–moderately calcareous, some carbonaceous specks, NSFOC.

3700–50 Shale – as above.

Limestone–Dolomitic Limestone – generally as above, mostly cream–buff–light tan.

Sandstone very fine grained grading to Siltstone – generally clear–milky, slightly–moderately calcareous in part, generally well consolidated, moderately sorted, sub–angular, siliceous in part, no apparent porosity, NSFOC.

3750–3800 Limestone – buff–light tan, frequently cream, cryptocrystalline, moderately firm, dense, frequently ostracods, possibly some pellets.

Shale, Siltstone, and Sandstone – as above.

3800–50 Limestone – buff–tan–light brown as above, just trace of ostracods.

Siltstone occasionally grading to very fine Sandstone – clear–milky, occasionally slightly white, generally well consolidated, hard–firm, commonly siliceous, no apparent porosity, NSFOC.

3850–80 Sandstone extremely fine grained commonly grading to Siltstone, generally well consolidated, slightly–moderately calcareous, clear–milky–slightly white in part, moderately well sorted, sub–angular to sub–round, generally no apparent porosity, NSFOC.

3880–3900 Shale – light–medium gray, frequently grayish tan, slightly–moderately calcareous, moderately firm–moderately soft.

Sandstone – very fine grained, clear–milky, slightly calcareous in part, generally moderately consolidated, slightly friable in part, moderately well sorted, sub–angular to sub–round, trace pinpoint dark brown oil stain, some dull yellow fluorescence, weak bright yellow milky cut.

3900–20 Limestone – buff–slightly cream in part, cryptocrystalline, firm, dense, some pellets and unidentifiable particles.

3920–40 Limestone – as above.

Shale – light gray commonly light emerald, slightly calcareous, moderately firm.

Some Sandstone as above, but slightly more pinpoint dark brown oil stain, with show as above.

3940–60	Limestone – light tan–buff, cryptocrystalline–occasionally microcrystalline, firm, dense, frequently ostracods, possibly some pellets.
	Shale – light gray, occasionally slightly emerald, slightly calcareous, moderately firm, abundant Pyrite in part, silty in part.
	Some Siltstone – clear–milky–slightly white in part, hard–firm, siliceous in part, slightly–moderately calcareous, frequently pyritic.
3960–80	Shale – light–medium gray, moderately firm–moderately soft, slightly calcareous, slightly carbonaceous in part, commonly pyritic, slightly silty in part.
	Some Siltstone – as above.
3980–4000	Siltstone – occasionally grading to very fine Sandstone as above, NSFOC, trace Pyrite.
	Some Shale as above – trace Pyrite.
4000–20	Shale – light gray, moderately firm, slightly calcareous, sub–blocky, frequently pyritic.
4020–40	Shale – generally light gray as above, frequently tan–medium brown Shale, slightly calcareous, firm–moderately firm, sub–blocky in part.
	Dolomite–Limy Dolomite – tan–orangish tan, cryptocrystalline, moderately soft–moderately firm, slightly–moderately carbonaceous.
4040–60	Shale – light gray–slightly emerald–tannish gray, as above.
	Some Siltstone – as above.
4060–90	Shale – light gray–slightly emerald, as above.
	Siltstone – as above.
4090–4120	Sandstone – very fine grained commonly ranging to Siltstone, commonly light brown stain with oil globules coating grain cluster, very weak dull yellow fluorescence in part, fair–good bright yellow flash–streaming cut, generally moderately consolidated–unconsolidated, moderately well

sorted, sub–angular to sub–round, fair–good intergranular porosity, but extremely fine grained. Best show in well to this point.

Shale – light gray–cream–very slightly emerald, slightly calcareous, moderately soft, sub–blocky in part.

4120–50 Shale – as above, silty in part.

Siltstone – milky–light white in part, moderately firm–moderately hard in part, siliceous in part, slightly calcareous, frequently slightly argillaceous, well consolidated, NSFOC.

Some Sandstone as above, probably cavings.

4150–80 Shale – tan–light gray–slightly emerald, moderately firm–moderately soft, slightly–moderately calcareous, sub–blocky in part, occasionally pyritic.

Some Siltstone as above, frequently Siltstone ranging to very fine Sandstone with pinpoint dark brown oil stain, very weak faint dull yellow fluorescence, and very weak–weak slow bright yellow streaming cut, moderately consolidated to unconsolidated, frequently friable, moderately sorted, slightly calcareous in part, poor–fair intergranular porosity, extremely fine grained. May be cavings.

4180–4210 Shale – light–medium gray, very slightly emerald in part, as above.

Siltstone – as above, NSFOC.

Limestone – buff–light tan, cryptocrystalline, moderately firm, dense, frequently ostracods.

4210–4240 Shale – generally medium gray, occasionally dark gray, moderately soft–occasionally moderately firm, slightly–moderately calcareous, slightly carbonaceous, sub–blocky in part.

4240–70 Shale – generally medium gray–frequently brownish gray–medium brown, moderately firm–moderately soft, slightly–moderately calcareous, frequently pyritic, sub–blocky, slightly carbonaceous.

4270–4300	Shale – light–medium gray–slightly emerald as above, frequently dark brown–black petroliferous Shale – soft–moderately soft, moderately–slightly calcareous, highly carbonaceous.
	Some Siltstone – clear–milky–slightly white in part, generally firm–moderately hard, slightly calcareous, siliceous in part, dense, NSFOC.
	Some Limestone – light tan–buff, cryptocrystalline, moderately firm, dense, frequently ostracods, trace pellets.
4300–60	Siltstone – as above.
	Shale – as above.
4360–90	Siltstone – occasionally ranging to very fine Sandstone – clear–milky–frequently white, generally well consolidated, firm–moderately hard, frequently siliceous, slightly–moderately calcareous, moderately sorted, generally no apparent porosity, trace pinpoint dark brown oil stain, no fluorescence, very weak milky dull yellow cut, argillaceous in part, occasional Pyrite.
	Some Shale – cream–light gray, moderately soft, slightly–moderately calcareous, occasionally pyritic.
4390–4420	Shale – medium gray, moderately firm–moderately soft, slightly calcareous, sub–blocky.
	Some Siltstone as above, NSFOC.
4420–50	Shale – as above, also frequently dark gray–black Shale, moderately firm–highly carbonaceous–petroliferous, slightly calcareous.
	Limestone – light tan, cryptocrystalline, moderately firm, occasionally siliceous, dense, frequently ostracods, pellets, trace pisolites.
	Some Siltstone – as above.
4450–80	Siltstone – clear–milky, firm–moderately hard, commonly siliceous, slightly–moderately calcareous, dense, well consolidated, NSFOC.
	Limestone – as above.

	Shale – light–medium gray–slightly emerald, as above.
4480–4510	Sandstone very fine grained commonly ranging to Siltstone – generally milky–slightly white, moderately well consolidated, slightly calcareous, slightly argillaceous in part, moderately well sorted, sub–angular to sub–round, fair porosity, NSFOC.
4510–40	Sandstone very fine grained commonly ranging to Siltstone – generally as above, but poorer sorting, more argillaceous, frequently specks of carbonaceous material, some Pyrite, trace Glauconite, NSFOC.
4540–70	Shale – light–medium gray, frequently slightly emerald tinge, moderately firm–moderately soft, slightly calcareous.
	Siltstone – generally milky–slightly white, slightly–moderately calcareous, moderately firm–hard, siliceous in part, specks of carbonaceous material, some Pyrite.
4570–4600	Shale as above, frequently pyritic.
	Some Limestone–Dolomitic Limestone – medium brown, cryptocrystalline, moderately firm, dense.
4600–20	Shale – light–medium gray, occasionally light emerald tinge, slightly–moderately calcareous, moderately firm–moderately soft, frequently pyritic.
	Siltstone – as above.
	Some Limestone–Dolomitic Limestone – as above.
4620–40	Shale – as above.
	Siltstone – as above.
4640–60	Shale – tannish gray, light–medium gray, moderately firm–moderately soft, slightly–moderately calcareous, frequently pyritic.
	Some Limestone – light tan–buff, cryptocrystalline, moderately firm, dense, commonly ostracods.

Some Siltstone – as above.

4660–80 Shale – light–medium gray–frequently slightly emerald, moderately firm–moderately soft, slightly–moderately calcareous.

Siltstone – milky–slightly white, generally firm–frequently hard, frequently siliceous, slightly–moderately calcareous, slightly argillaceous in part, frequently pyritic.

Some speck carbonaceous material, trace Glauconite, NSFOC.

4680–4700 Shale – light–medium gray frequently slightly emerald tinge, also commonly dark brown, slightly calcareous, highly carbonaceous, moderately firm.

Some Limestone – buff–light tan, occasionally clear spar calcite, cryptocrystalline–microcrystalline, moderately firm–dense, commonly pelletoidal, frequently ostracods.

4700–20 Shale – light–medium gray, moderately firm to moderately soft, slightly–moderately calcareous, silty in part, frequently specks of carbonaceous material, some Pyrite.

4720–40 Shale – as above.

Siltstone ranging to very fine grained Sandstone – frequently light brown oil stain, with specks of dark brown oil on some clusters, some black dead oil, very weak dull yellow fluorescence, fair bright yellow halo–slow streaming cut, generally well consolidated, firm–moderately firm, slightly calcareous, moderately well sorted, sub–angular to sub–round, very poor intergranular porosity – tight, very poor matrix porosity.

Shale – as above.

4740–60 Shale – light–medium gray, moderately soft, slightly–moderately calcareous, slightly pyritic.

Siltstone occasionally ranging to very fine Sandstone – clear–milky–slightly white, generally well consolidated, slightly calcareous, moderately well sorted sub–angular to sub–round, mostly no show, some show as above, probably cavings.

4760–80	Sandstone – very fine grained commonly grading to Siltstone, generally light tan even oil stain, some pinpoint medium brown oil stain, some dull yellow fluorescence, weak dull yellow milky cut. Generally moderately unconsolidated, friable in part, slightly calcareous, moderately well sorted, sub–angular to sub–round, fair–good intergranular porosity, extremely fine grained. E–Logs indicate this all cavings.
	Shale – light–medium gray, as above.
4780–4800	Shale – light–medium gray, occasionally brownish gray, moderately firm–moderately soft, slightly–moderately calcareous, sub–blocky, in part.
	Siltstone – milky–clear–silty white, generally firm–hard, frequently siliceous, slightly–moderately calcareous, well consolidated, NSFOC.
4800–20	Shale – light–medium gray, frequently dark tan, moderately firm–moderately soft, slightly–moderately calcareous, moderately–highly carbonaceous in part, commonly sub–blocky, trace petroliferous material.
4820–40	Limestone – buff–light tan, cryptocrystalline, moderately firm, dense, trace clear spar calcite, trace pellets.
	Shale – mixture of light–medium gray, slightly emerald–dark brown and moderately–highly carbonaceous, as above.
4840–60	Shale – light–medium gray, moderately firm, occasionally moderately soft, slightly–moderately calcareous, frequently pyritic, commonly sub–blocky, silty in part.
	Some Siltstone as 4780–4800'.
4860–80	Shale – as above.
	Siltstone – as above, but decided increase in quantity.
4880–4900	Shale – light–medium gray, frequently slightly emerald, medium brown, moderately soft–slightly firm in part, slightly–moderately calcareous, slightly–moderately carbonaceous in part.
	Siltstone – milky–slightly white in part, moderately calcareous, generally well consolidated, firm–moderately firm, siliceous in part, NSFOC.

4900–20	Shale – light–medium gray, slightly calcareous, moderately firm–moderately soft, sub–blocky in part, slightly carbonaceous, silty in part.
	Siltstone – milky–slightly white, occasionally clear, moderately calcareous, generally well consolidated, firm–hard, frequently siliceous, trace of carbonaceous specks, trace Pyrite, dense, NSFOC.
4920–40	Shale – as above, frequently medium–dark brown, slightly calcareous, moderately–highly carbonaceous, moderately firm, sub–blocky in part.
	Some Siltstone, as above.
4940–60	Shale – dark gray–dark brownish gray–frequently black, slightly–moderately calcareous, moderately–highly carbonaceous, petroliferous in part, moderately firm–moderately soft, sub–blocky in part.
4960–80	Shale – as above.
	Limestone – light tan–occasionally medium brown, cryptocrystalline, moderately firm–moderately soft, slightly argillaceous in part, dense.
4980–5000	Shale – generally light gray, frequently medium gray, moderately soft, slightly–moderately calcareous.
	Siltstone as 4900–4920' above.
5000–20	Shale – light–medium gray commonly with slightly emerald tinge, frequently medium brown–grayish brown, moderately soft–moderately firm, slightly calcareous, sub–blocky in part, silty in part.
	Some Siltstone – as above.
5020–60	Shale – cream–slightly gray, frequently very slightly emerald, slightly calcareous, moderately soft,–moderately firm, sub–blocky in part, frequently pyritic, silty in part.
	Some Siltstone – as above.
5060–80	Sandstone very fine grained ranging to Siltstone – frequently light tan oil stain, some oil globules on clusters, no fluorescence, very weak–weak dull yellow milky–slow streaming cut. Generally moderately

unconsolidated, friable in part, slightly calcareous, moderately well sorted, sub–round to sub–angular, some fair intergranular porosity but extremely fine grained.

Shale – as above.

5080–5100 Sandstone – as above.

Shale – as above.

Siltstone – as above, NSFOC.

5100–20 Shale – as above.

Siltstone – as above.

Some Sandstone – as above, probably cavings.

5120–40 Shale – cream–light gray–frequently medium gray, slightly–moderately calcareous, sub–blocky, moderately soft–moderately firm.

Limy Dolomite–Dolomite – orangish brown, medium brown, cryptocrystalline, moderately firm–moderately soft in part, slightly carbonaceous, probably cavings.

Poor Sample.

5140–80 Shale – light–medium gray, frequently very slight tinge of emerald, moderately soft, slightly calcareous, trace Pyrite, silty in part.

Some Siltstone – clear–milky, slightly–moderately calcareous, slightly argillaceous in part, generally well consolidated, occasionally speck of carbonaceous material, some Pyrite.

5180–5200 Shale – medium–dark gray, frequently black and highly carbonaceous to slightly petroliferous in part, moderately firm–moderately soft, slightly–moderately carbonaceous, sub–blocky in part, trace Pyrite.

5200–60 Shale – as above.

Sandstone very fine grained occasionally grading to Siltstone, generally light–medium brown stain, common dark brown oil globules on grains, no fluorescence, weak–fair slow streaming bright yellow cut, slightly calcareous, moderately well consolidated, moderately well sorted, sub–round to sub–angular, slightly friable in part, some fair intergranular porosity, trace Pyrite, possibly cavings.

5260–90 Shale – generally medium gray, frequently dark gray, moderately soft, occasionally moderately firm, slightly–moderately calcareous, slightly carbonaceous, frequently pyritic, frequently oil coated Shale fragments which is caused by contamination.

5290–5320 Shale – mostly light–medium gray, slightly calcareous, slightly–moderately carbonaceous, moderately soft, silty in part, frequently pyritic, commonly some black Shale – moderately soft, bronze tinge in part from much microcrystalline Pyrite, slightly calcareous, highly carbonaceous–petroliferous. Oil coating some of these fragments.

5320–50 Shale – black with bronze cast–dark brownish gray, moderately soft, moderately firm, highly carbonaceous–petroliferous, non–calcareous to slightly calcareous, abundant Pyrite, sub–blocky in part.

5350–80 Shale – generally as above, but mostly dark gray–dark brownish gray.

5380–5410 Shale – as 5320–50' above, silty in part.

Some Siltstone, light gray, frequently argillaceous, slightly–moderately calcareous, frequently streaks–specks of carbonaceous material, moderately firm–moderately soft, some Pyrite, NSFOC.

5410–40 Shale – as 5350–5380' above.

5440–60 Shale – cream–light gray, occasionally buff, moderately soft–moderately firm, slightly–moderately calcareous, frequently specks of carbonaceous material, silty in part.

Some Sandstone – fine–very fine grained, clear–milky, moderately unconsolidated, slightly friable in part, moderately well sorted, sub–angular to sub–round, slightly calcareous in part. Faint–weak light brown oil stain in part, frequently oil droplets and pinpoint speck on grains,

	contains much dull gold fluorescence, good bright yellow flash–streaming cut. Some fair–good intergranular porosity.
5460–80	Sandstone – as above.
5480–5500	Shale – light gray, frequently slightly emerald tinge, commonly cream, moderately soft, slightly–moderately calcareous, slightly carbonaceous in part.
	Sandstone – as above, probably cavings.
	Some Siltstone – as above, NSFOC.
5500–20	Shale – light gray, frequently cream, slightly calcareous, moderately firm–moderately soft, slightly carbonaceous, frequently pyritic, silty in part.
	Siltstone – white–slightly gray, slightly–moderately calcareous, well consolidated, frequently slightly argillaceous, commonly pyritic, some specks of carbonaceous material.
5520–40	Siltstone – cream–light gray, generally hard–firm, slightly calcareous, argillaceous in part, frequently specks of carbonaceous material, abundant Pyrite, NSFOC, trace Glauconite.
	Shale – light–medium gray, brownish gray, slightly calcareous, moderately firm, frequently very small specks of carbonaceous material, commonly silty, sub–blocky.
5540–80	Shale – as above, some black Shale as above, probably cavings.
	Siltstone – as above.
5580–5640	Siltstone – grading to very fine grained Sandstone – some fine grained Sandstone – clear–milky–slightly gray in part, moderately well–well consolidated, slightly calcareous, moderately firm, moderately–poorly sorted, slightly argillaceous in part, sub–angular to sub–round, no apparent porosity, NSFOC, some specks of carbonaceous material in part, some Pyrite, slight show in part, but considered contamination.

	Shale – light gray–cream, frequently medium gray, moderately soft, slightly–moderately calcareous, frequently very small specks of carbonaceous material.
5640–60	Siltstone ranging to very fine–fine Sandstone – as above.
	Shale – as above, also commonly dark gray–black Shale.
	Sample highly mixed and probably much caving.
5660–80	Sandstone fine–very fine grained, clear–milky, unconsolidated–moderately unconsolidated, slightly calcareous in part, moderately well sorted, sub–angular to sub–round, some Pyrite, some specks of carbonaceous material, generally no apparent porosity, possibly some poor–fair intergranular porosity, no stain, dull yellow fluorescence, very weak bright yellow milky–slow streaming cut, some Pyrite.
	Some Siltstone – as above.
	Some Shale – light–medium gray, occasionally cream, moderately soft, silty in part, slightly calcareous, some Pyrite.
5680–5700	Shale – as above.
	Siltstone – as above.
	TOTAL DEPTH – 5700' (Driller).

DENNIS REHRIG & ASSOCIATES, INC.

OIL & GAS CONSULTING

4924 RIMROCK ROAD
BILLINGS, MONTANA 59106
(406) 656-4785

RECEIVED
JAN 03 1994
DIVISION OF
OIL, GAS & MINING

GEOLOGIC WELL LOG

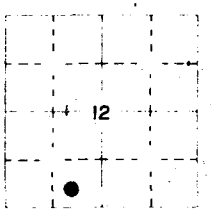

BALCRON OIL 24-12J MONUMENT BUTTE-FEDERAL
539' FSL 1777' FWL, SECTION 12, T 9 S-R 16 E
DUCHESNE COUNTY, UTAH

ELEVATIONS: 5495' GL 5505' KB

SPUD: 7:30 PM (MST) 12/3/93 (Rotary)

OUT FROM UNDER SURF. CSG.: 7:30 PM (MST) 12/3/93
(Surface casing previously set)

DATE DRLG. COMP.: 8:15 AM (MST) 12/8/93

DATE WELL COMPLETED: 5:00 PM (MST) 12/9/93

STATUS: CASED FOR OIL COMPLETION ATTEMPT

SURF. CSG.: 286' OF 8 5/8"

PRODUCTION CSG: 5 1/2" TO 5685'

CORES: NONE

DRILL STEM TESTS: NONE

CONTRACTOR: UNION DRILLING CO.

RIG: 17

DERRICK: CABOT-FRANKS, 97' MAST (DOUBLE)

DRAWWORKS: CABOT-FRANKS, POWERED BY 1
D-343 DIESEL CAT

PUMP: GARDINER-DENVER FXN, 14" STROKE, 5 1/2" LINER

DRILL PIPE: 4 1/2" OD, 2 1/4" ID, XO-THREAD

COLLARS: BHA 557' - 18 JTS OF 6" DC's

MUD SYSTEM: AIR/FOAM 286' - TOTAL DEPTH
LOADED HOLE W/ KCL-WATER FOR E-LOGS

TOTAL BITS: 1 ROTARY AIR/FOAM DRILLED

TOTAL DAYS TO LOG POINT: 6 TO COMPL: 7

T.D. DRILLER 5700' LOGGER 5704'

PENETRATION: 284' BELOW CARBONATE MARKER

ROCK TYPE
(Consistent with American Stratigraphic Company)

- CONGLOMERATE
- SANDSTONE
- SILTSTONE
- SHALE
- BENTONITE
- CHERT
- LIMESTONE
- DOLOMITE
- ANHYDRITE
- SALT
- COAL
- IGNEOUS
- VOLCANIC
- METAMORPHIC

ACCESSORIES

- SANDY
- SILTY
- SAND GRAINS
- SILICEOUS
- GLAUCONITE
- P PYRITE
- PLANT REMAINS
- MINERAL CRYSTALS
- CHERT
- ARGILLACEOUS
- CALCAREOUS
- DOLOMITIC
- ANHYDRITIC
- SALT CAST or INFILL
- PHOSPHATE PELLETS
- NODULES

ORGANIC or NON ORGANIC ALLOCHEMS

- FORAMINIFERA
- CRINOID
- PELECYPOD
- BIOCLASTIC or FRAGMENTAL
- CORAL
- STROMATOPOROID
- BRYOZOA
- BRACHIOPOD
- OSTRACOD
- CEPHALOPOD
- GASTROPOD
- ECHINOID
- F FOSSILS UNIDENTIFIABLE
- OOLITES
- PISOLITE 2mm. or over
- PSEUDO OOLITES or PELLETS
- INTRACLASTS

FRAMEWORK ALGAE

- SKELETAL
- OOTOID or ONCOLYTIC

NON-FRAMEWORK ALGAE

- NON-DESCRIPT
- LAMINATED

MISCELLANEOUS

- NO SAMPLES
- CANNOT INTERPRET, cavings, etc.
- QUESTIONABLE INTERPRETATION
- STYLOLITES

POROSITY TYPES

- X INTERCRYSTALLINE, INTERGRANULAR, INTERFRAGMENTAL
- ϕ INTEROOLITIC, INTERPELLETOID
- V VUGGY - voids greater than 1/16mm
- P PINPOINT - voids less than 1/16mm
- MOLDIC
- O ORGANIC - bridged, Intrafossil
- F FRACTURE
- e EARTHY - low permeability, crystals less than 1/16mm
- FENESTRAL - voids from gas bubbles, shrinkage cracks & birdseye texture

OIL STAINS - stain present

- ● EVEN STAINING, FLOURESCES IN SOLVENT
- ◑ SPOTTED STAINING, FLOURESCES IN SOLVENT
- D DEAD, ASPHALTIC, BITUMEN, ETC.
- O QUESTIONABLE, NO FLOURESCENCE IN SOLVENT

EVALUATION LEGEND

- WHOLE CORE
- DRILL-STEM TEST
- PERFORATIONS

DRILLING AND PRODUCTION DATA

CASING SET	RPM	ROTATION (REV/MIN)	
NB	NEW BIT	PP	PUMP PRESSURE
RRB	RERUN BIT	LC	LOST CIRCULATION
CB	CORE BIT	NR	NO RETURNS
DS	DEVIATION SURVEY	TG	TRIP GAS
W/B	WEIGHT ON BIT	CG	CONNECTION GAS

MUD DATA

V	VISCOSITY
W	WEIGHT IN lbs/gal
WL	FILTRATE IN cc
FC	FILTER CAKE
CL	CHLORIDE CONTENT (ppm)
Rm	MUD RESISTIVITY (⎍)
Rmf	MUD FILTRATE RESISTIVITY (⎍)

ELECTRIC LOG
GAMMA RAY / CALIPER

INTERPRETED LITHOLOGY AND DEPTH

DRILLING PENETRATION RATE (MIN / FT)

POROSITY (%)

OIL SHOWS

CORE & DST

CASING & PERFORATIONS

INTERPRETATIVE LITHOLOGIC & SAMPLE DESCRIPTIONS BASED ON SAMPLES CAUGHT & LAGGED BY MUD LOGGERS.

SEE REPORT FOR DETAILED DESCRIPTION OF SAMPLES, POROSITY & SHOWS.

1400

E-LOG TOPS

GREEN RIVER

1500

0 1 2 3 4 5

SAMPLES EXAMINED FROM 1400 - TOTAL DEPTH, SEE SAMPLE DESCRIPTIONS IN REPORT FOR DETAILS.

ICI 3333

PRINTED IN U.S.A.

1600

1700

1800

1900

2000

2100

HORSE BENCH SAND

2200

2300

2400

2500

2600

2700

G = SIGNIFICANT MUD LOG GAS SHOWS

NO SAMPLE DUE TO HOLE BLOWING GAS

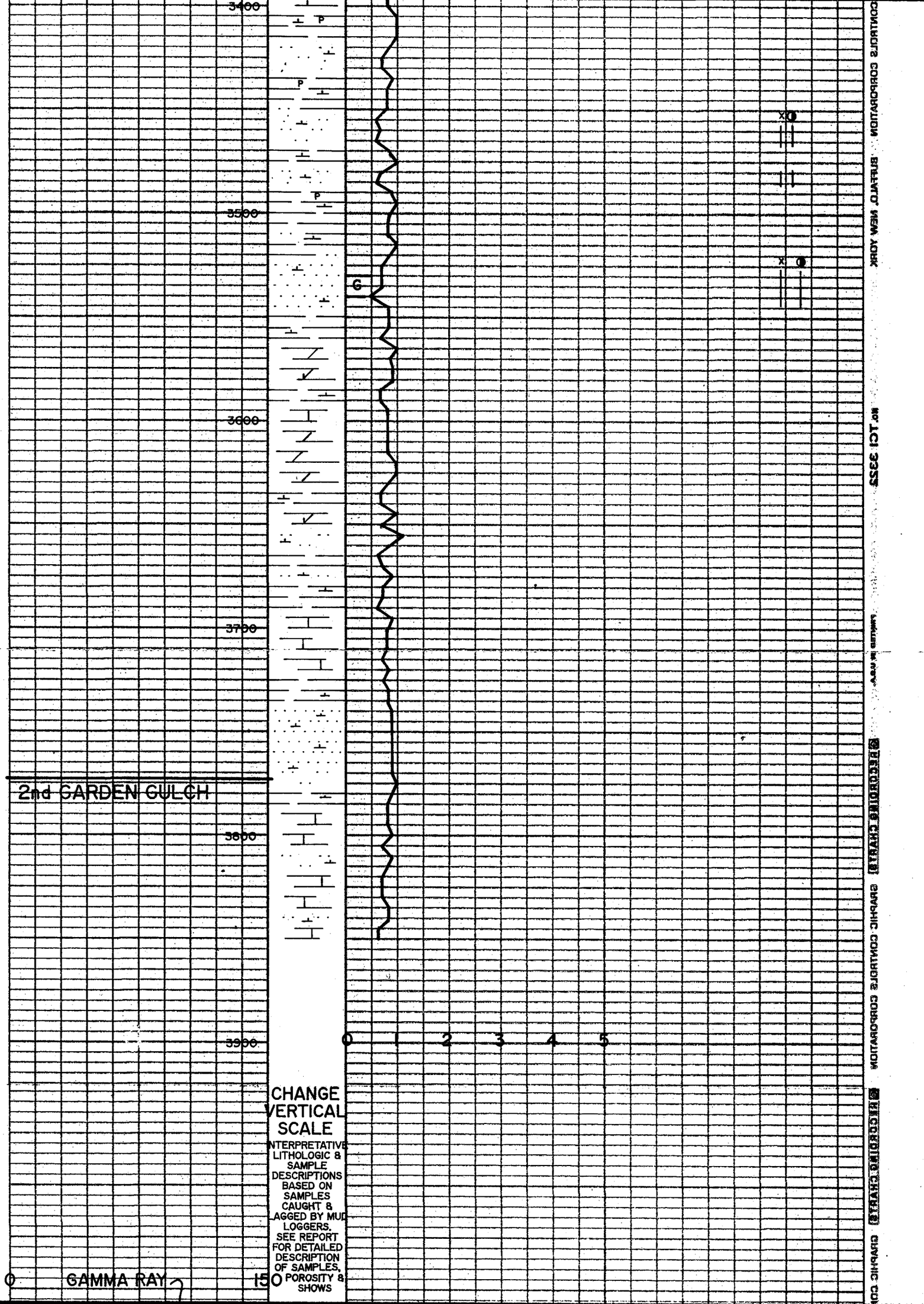
3400
3500
3600
3700
3800
3900
P
P
P
G
2nd GARDEN GULCH
0
1
2
3
4
5
CHANGE VERTICAL SCALE
INTERPRETATIVE LITHOLOGIC & SAMPLE DESCRIPTIONS BASED ON SAMPLES CAUGHT & AGGED BY MUD LOGGERS. SEE REPORT FOR DETAILED DESCRIPTION OF SAMPLES, POROSITY & SHOWS
0
GAMMA RAY
150
CONTINENTAL GEOSCIENCE DIVISION
GRAPHIC CONTROLS CORPORATION
RECORDING CHARTS
GRAPHIC CONTROLS CORPORATION
BUFFALO, NEW YORK
No. TCI 3355
U.S.A.

50

4000

50

4100

G

50

G = SIGNIFICANT MUD
LOG GAS SHOWS

50

4500

50

DOUGLAS CREEK

4600

50

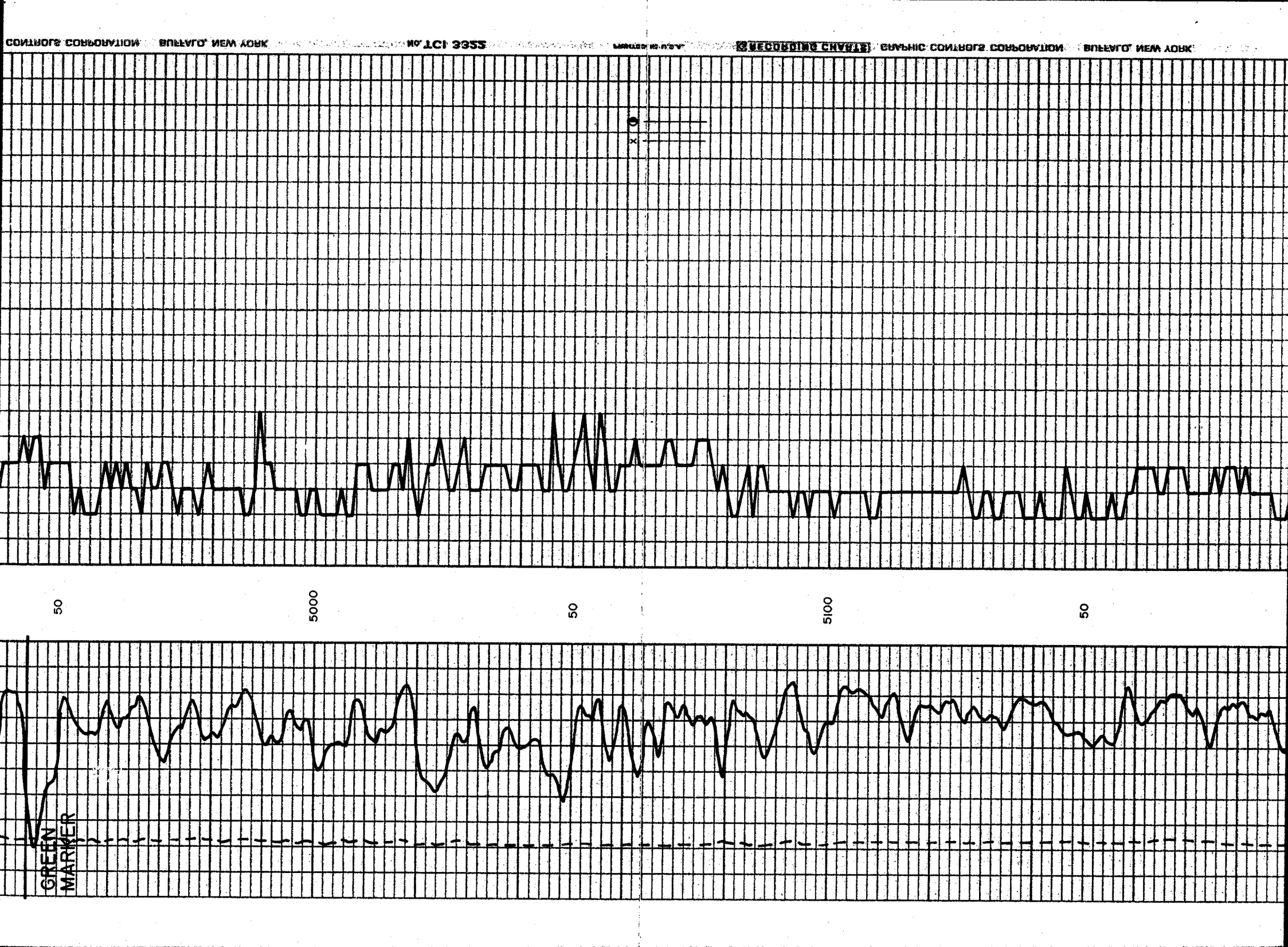
50
5000
50
5100
50
GREEN
MARKER

5200

50

5300

50

5400

CARBONATE

MARKER

RECORDING CHARTS

GRAPHIC CONTROLS CORPORATION BUFFALO, NEW YORK

No. TCI 3352

No. TCI 3352

MADE IN U.S.A.

50

G

5500

50

5600

0 GAMMA RAY 150

6 CALIPER 16 50

E-LOG
TOPS

G = SIGNIFICANT MUD
LOG GAS SHOWS

5700

0 1 2 3 4

INTERPRETATIVE LITHOLOGIC & SAMPLE DESCRIPTIONS BASED ON SAMPLES CAUGHT & LAGGED BY MUD LOGGERS. SEE REPORT FOR DETAILED DESCRIPTION OF SAMPLES, POROSITY & SHOWS

TOTAL DEPTH DRILLER - 5700'
TOTAL DEPTH LOGGER - 5704'

GENERALLY DIFFICULT TO DETERMINE IF DRILLTIME TIES TO E-LOGS. FREQUENTLY SAMPLES DO NOT FIT E-LOGS.

CONFIDENTIAL

Form 3160-5
(June 1990)

UNITED STATES
DEPARTMENT OF THE INTERIOR
BUREAU OF LAND MANAGEMENT

FORM APPROVED
Budget Bureau No. 1004-0135
Expires: March 31, 1993

SUNDRY NOTICES AND REPORTS ON WELLS

Do not use this form for proposals to drill or to deepen or reentry to a different reservoir.
Use "APPLICATION FOR PERMIT—" for such proposals

RECEIVED
JAN 05 1994
DIVISION OF
OIL, GAS & MINING

SUBMIT IN TRIPLICATE

5. Lease Designation and Serial No.
U-035521-A

6. If Indian, Allottee or Tribe Name
n/a

7. If Unit or CA, Agreement Designation
Jonah Unit

1. Type of Well
[X] Oil Well [ ] Gas Well [ ] Other

8. Well Name and No.
Balcron Monument Federal #2A-12J

2. Name of Operator
Equitable Resources Energy Company, Balcron Oil Division

9. API Well No.
43-013-31409

3. Address and Telephone No.
P.O. Box 21017, Billings, MT 59104 (406) 259-7860

10. Field and Pool, or Exploratory Area
Monument Butte / Green River

4. Location of Well (Footage, Sec., T., R., M., or Survey Description)
SE SW Section 12, T9S, R16E
539' FSL, 1777' FWL

11. County or Parish, State
Duchesne County, Utah

12. CHECK APPROPRIATE BOX(s) TO INDICATE NATURE OF NOTICE, REPORT, OR OTHER DATA

TYPE OF SUBMISSION	TYPE OF ACTION	
[ ] Notice of Intent	[ ] Abandonment	[ ] Change of Plans
[X] Subsequent Report	[ ] Recompletion	[ ] New Construction
[ ] Final Abandonment Notice	[ ] Plugging Back	[ ] Non-Routine Fracturing
	[ ] Casing Repair	[ ] Water Shut-Off
	[ ] Altering Casing	[ ] Conversion to Injection
	[X] Other Report of First Production	[ ] Dispose Water

(Note: Report results of multiple completion on Well Completion or Recompletion Report and Log form.)

13. Describe Proposed or Completed Operations (Clearly state all pertinent details, and give pertinent dates, including estimated date of starting any proposed work. If well is directionally drilled, give subsurface locations and measured and true vertical depths for all markers and zones pertinent to this work.)*

First production on this well was on 12-30-93 at 12:00 noon.

14. I hereby certify that the foregoing is true and correct
Signed Bobbie Schuman Title Coordinator of Environmental and Regulatory Affairs Date 1-3-94

(This space for Federal or State office use)

Approved by _____ Title _____ Date _____
Conditions of approval, if any:

Title 18 U.S.C. Section 1001, makes it a crime for any person knowingly and willfully to make to any department or agency of the United States any false, fictitious or fraudulent statements or representations as to any matter within its jurisdiction.

*See Instruction on Reverse Side

Form 3160-5
(June 1990)

UNITED STATES
DEPARTMENT OF THE INTERIOR
BUREAU OF LAND MANAGEMENT

FORM APPROVED
Budget Bureau No. 1004-0135
Expires: March 31, 1993

SUNDRY NOTICES AND REPORTS ON WELLS

Do not use this form for proposals to drill or to deepen or reentry to a different reservoir.
Use "APPLICATION FOR PERMIT—" for such proposals

SUBMIT IN TRIPLICATE

1. Type of Well
[X] Oil Well [ ] Gas Well [ ] Other

2. Name of Operator
Equitable Resources Energy Company, Balcron Oil Division

3. Address and Telephone No.
P.O. Box 21017, Billings, MT 59104 (259-7860

4. Location of Well (Footage, Sec., T., R., M., or Survey Description)
SE SW Section 12, T9S, R16E 539' FSL, 1777' FWL

5. Lease Designation and Serial No.
U-035521-A

6. If Indian, Allottee or Tribe Name
n/a

7. If Unit or CA, Agreement Designation
Jonah Unit

8. Well Name and No.
Balcron Monument Federal #24-12J

9. API Well No.
43-013-31409

10. Field and Pool, or Exploratory Area
Monument Butte/Green River

11. County or Parish, State
Duchesne County, Utah

12. CHECK APPROPRIATE BOX(s) TO INDICATE NATURE OF NOTICE, REPORT, OR OTHER DATA

TYPE OF SUBMISSION	TYPE OF ACTION	
[ ] Notice of Intent	[ ] Abandonment	[ ] Change of Plans
[X] Subsequent Report	[ ] Recompletion	[ ] New Construction
[ ] Final Abandonment Notice	[ ] Plugging Back	[ ] Non-Routine Fracturing
	[ ] Casing Repair	[ ] Water Shut-Off
	[ ] Altering Casing	[ ] Conversion to Injection
	[XX] Other Site Security Diagram	[ ] Dispose Water

(Note: Report results of multiple completion on Well Completion or Recompletion Report and Log form.)

13. Describe Proposed or Completed Operations (Clearly state all pertinent details, and give pertinent dates, including estimated date of starting any proposed work. If well is directionally drilled, give subsurface locations and measured and true vertical depths for all markers and zones pertinent to this work.)*

Attached is our Site Security Diagram for this well.

JAN 20 1994

14. I hereby certify that the foregoing is true and correct
Signed Bobbie Schuman Title Coordinator of Environmental and Regulatory Affairs Date 1-18-94

(This space for Federal or State office use)

Approved by _____ Title _____ Date _____
Conditions of approval, if any:

Title 18 U.S.C. Section 1001, makes it a crime for any person knowingly and willfully to make to any department or agency of the United States any false, fictitious or fraudulent statements or representations as to any matter within its jurisdiction.

*See Instruction on Reverse Side

Equitable Resources Energy Company
Balcron Monument Federal 24-12J
Production Facility Diagram

Balcron Monument Federal 24-12J
SE SW Sec. 12, T9S, R16E
Duchesne County, Utah
Federal Lease #U-096550
539' FSL, 1777' FWL

DIAGRAM NOT TO SCALE

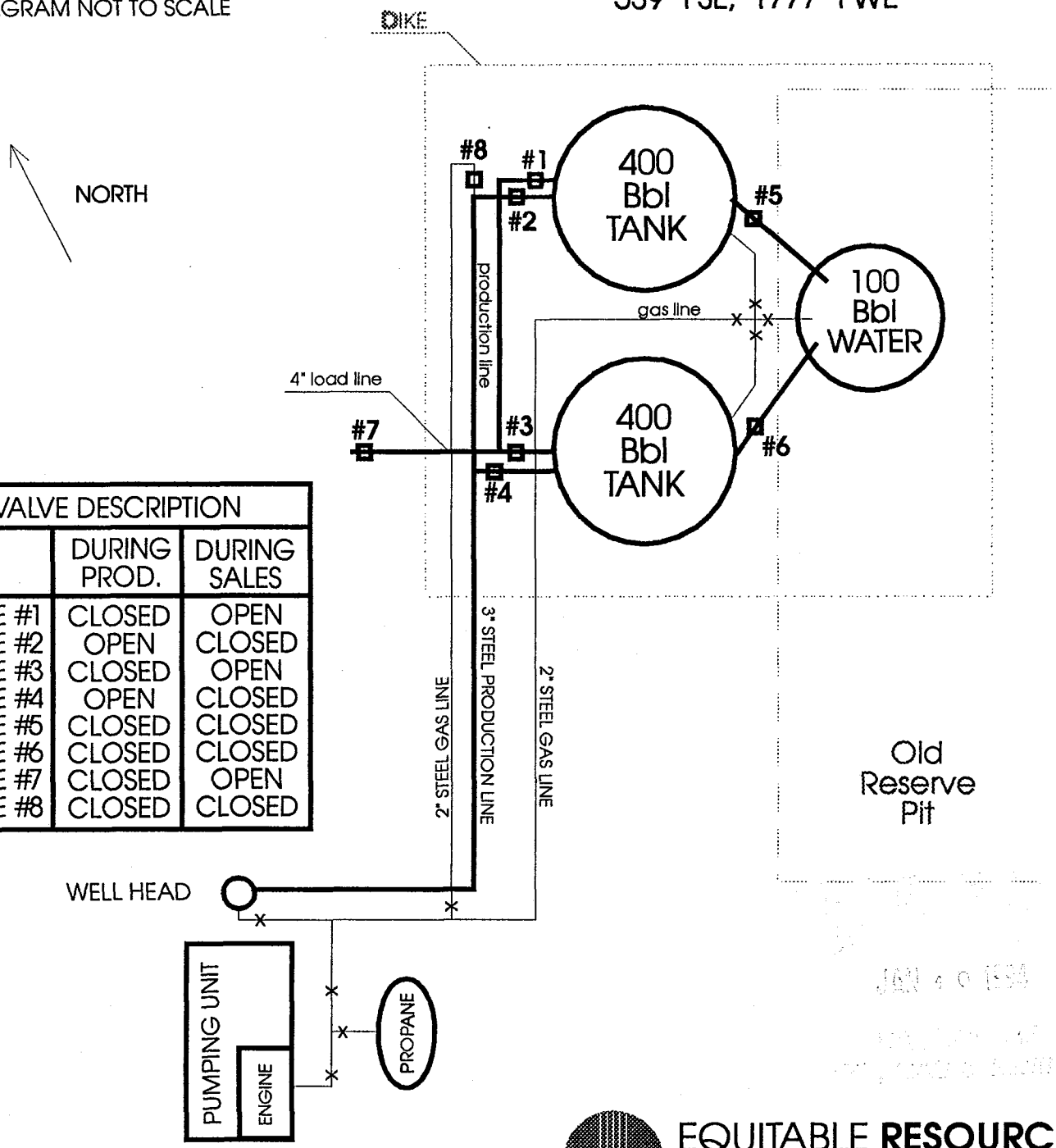

VALVE DESCRIPTION		
	DURING PROD.	DURING SALES
VALVE #1	CLOSED	OPEN
VALVE #2	OPEN	CLOSED
VALVE #3	CLOSED	OPEN
VALVE #4	OPEN	CLOSED
VALVE #5	CLOSED	CLOSED
VALVE #6	CLOSED	CLOSED
VALVE #7	CLOSED	OPEN
VALVE #8	CLOSED	CLOSED

EQUITABLE **RESOURCES**
ENERGY COMPANY
BALCRON OIL DIVISION
1601 Lewis Avenue
P.O. Box 21017
Billings, MT 59104-1017
(406) 259-7860

Form 3160-5
(June 1990)

UNITED STATES
DEPARTMENT OF THE INTERIOR
BUREAU OF LAND MANAGEMENT

FORM APPROVED
Budget Bureau No. 1004-0135
Expires: March 31, 1993

SUNDRY NOTICES AND REPORTS ON WELLS

Do not use this form for proposals to drill or to deepen or reentry to a different reservoir.
Use "APPLICATION FOR PERMIT—" for such proposals

SUBMIT IN TRIPLICATE

5. Lease Designation and Serial No.: U-035521-A
6. If Indian, Allottee or Tribe Name: n/a
7. If Unit or CA, Agreement Designation: Jonah Unit
1. Type of Well: [X] Oil Well [ ] Gas Well [ ] Other
8. Well Name and No.: Balcron Monument Federal #24-12J
2. Name of Operator: Equitable Resources Energy Company, Balcron Oil Division
9. API Well No.: 43-013-31409
3. Address and Telephone No.: P.O. Box 21017, Billings, MT 59104 (406) 259-7860
10. Field and Pool, or Exploratory Area: Monument Butte/Green River
4. Location of Well (Footage, Sec., T., R., M., or Survey Description): SE SW Section 12, T9S, R16E 539' FSL, 1777' FWL
11. County or Parish, State: Duchesne County, utah

12. CHECK APPROPRIATE BOX(s) TO INDICATE NATURE OF NOTICE, REPORT, OR OTHER DATA

TYPE OF SUBMISSION	TYPE OF ACTION	
[X] Notice of Intent	[ ] Abandonment	[ ] Change of Plans
[X] Subsequent Report	[ ] Recompletion	[ ] New Construction
[ ] Final Abandonment Notice	[ ] Plugging Back	[ ] Non-Routine Fracturing
	[ ] Casing Repair	[ ] Water Shut-Off
	[ ] Altering Casing	[ ] Conversion to Injection
	[X] Other Onshore Order #7	[ ] Dispose Water

(Note: Report results of multiple completion on Well Completion or Recompletion Report and Log form.)

13. Describe Proposed or Completed Operations (Clearly state all pertinent details, and give pertinent dates, including estimated date of starting any proposed work. If well is directionally drilled, give subsurface locations and measured and true vertical depths for all markers and zones pertinent to this work.)*

Any water produced by this well will be held in a produced water tank and trucked to a commercial disposal facility. The primary facility to be used is the R.N. Industries produced water disposal facility located in Section 9, T2S, R2W in Duchesne County, Utah. A copy of the State-issued permit for that facility is on file at the Vernal Bureau of Land Management. If for some reason the operator is unable to use this primary disposal facility, the produced water will be trucked to another State-approved disposal facility. If applicable, Operator has received approved Right-of-Way access to this well location for the Vernal Bureau of Land Management.

14. I hereby certify that the foregoing is true and correct
Signed Bobbie Schuman Title Coordinator of Environmental and Regulatory Affairs Date 1-18-94

(This space for Federal or State office use)

Approved by _____ Title _____ Date _____
Conditions of approval, if any:

Title 18 U.S.C. Section 1001, makes it a crime for any person knowingly and willfully to make to any department or agency of the United States any false, fictitious or fraudulent statements or representations as to any matter within its jurisdiction.

*See Instruction on Reverse Side

(November 1983)
(formerly 9-330)

UNITED STATES
DEPARTMENT OF THE INTERIOR
BUREAU OF LAND MANAGEMENT

SUBMIT IN DUPLICATE* (other instructions on reverse side)

Budget Bureau No. 1004-0137
Expires August 31, 1985

WELL COMPLETION OR RECOMPLETION REPORT AND LOG*

CONFIDENTIAL

1a. TYPE OF WELL: OIL WELL [X] GAS WELL [ ] DRY [ ] Other

b. TYPE OF COMPLETION: NEW WELL [X] WORK OVER [ ] DEEP-EN [ ] PLUG BACK [ ] DIFF. RESVR. [ ] Other

5. LEASE DESIGNATION AND SERIAL NO.: U-035521-A

6. IF INDIAN, ALLOTTEE OR TRIBE NAME: n/a

7. UNIT AGREEMENT NAME: Jonah Unit

8. FARM OR LEASE NAME: Balcron Monument Federal

9. WELL NO.: #24-12J

10. FIELD AND POOL, OR WILDCAT: Monument Butte/Green River

11. SEC., T., R., M., OR BLOCK AND SURVEY OR AREA: SE SW Section 12, T9S, R16E

2. NAME OF OPERATOR: Equitable Resources Energy Company, Balcron Oil Division

3. ADDRESS OF OPERATOR: P.O. Box 21017, Billings, MT 59104

4. LOCATION OF WELL (*Report location clearly and in accordance with any State requirements*)*
At surface: 539' FSL, 1777' FWL
At top prod. interval reported below
At total depth

14. PERMIT NO.	DATE ISSUED	12. COUNTY OR PARISH	13. STATE
43-013-31409	9-7-93	Duchesne	Utah

15. DATE SPUDDED	16. DATE T.D. REACHED	17. DATE COMPL. (*Ready to prod.*)	18. ELEVATIONS (DF, RKB, RT, GR, ETC.)*	19. ELEV. CASINGHEAD
11-8-93	12-10-93	12-30-93	4495.5' GL	n/a

20. TOTAL DEPTH, MD & TVD	21. PLUG, BACK T.D., MD & TVD	22. IF MULTIPLE COMPL., HOW MANY*	23. INTERVALS DRILLED BY	ROTARY TOOLS	CABLE TOOLS
5700'	5636.34'	No	→	Sfc - TD	n/a

24. PRODUCING INTERVAL(S), OF THIS COMPLETION—TOP, BOTTOM, NAME (MD AND TVD)*: 4080' - 5485' Green River

25. WAS DIRECTIONAL SURVEY MADE: No

26. TYPE ELECTRIC AND OTHER LOGS RUN: DIL - MSFL - SDL - DSN - GR MUD 1-13-94

27. WAS WELL CORED: No

28. CASING RECORD (*Report all strings set in well*)

CASING SIZE	WEIGHT, LB./FT.	DEPTH SET (MD)	HOLE SIZE	CEMENTING RECORD	AMOUNT PULLED
8-5/8"	24#	269' GL	12-1/4"	150 sxs Class "G" + additives	n/a
5-1/2"	15.5#	5685.22'	7-7/8"	204 sxs Thrifty Lite and 215 sxs 50-50 POZ	n/a

29. LINER RECORD

SIZE	TOP (MD)	BOTTOM (MD)	SACKS CEMENT*	SCREEN (MD)
n/a				

30. TUBING RECORD

SIZE	DEPTH SET (MD)	PACKER SET (MD)
2-7/8"	5550.71'	n/a

31. PERFORATION RECORD (*Interval, size and number*)
5476' - 85' (2 SPF)
4746' - 50' (2 SPF)
4080' - 86' (2 SPF)
4118' - 23' (2 SPF)

32. ACID, SHOT, FRACTURE, CEMENT SQUEEZE, ETC.

DEPTH INTERVAL (MD)	AMOUNT AND KIND OF MATERIAL USED
5476'-85': 4080'-86' 4118'-23'	23,350# 16/30 sand in 410 bbls 2% KCL water; acid w/1000 gallons 15% HCL.
4746'-50	33,085# 16/30 sand in 500 bbls 2% KCL and 500 gallons 15% HCL
	13,978# 16/30 sand in 262 bbls 2% KCL and 500 gallons 15% HCL.

33.* PRODUCTION

DATE FIRST PRODUCTION	PRODUCTION METHOD (*Flowing, gas lift, pumping—size and type of pump*)	WELL STATUS (*Producing or shut-in*)
12-30-93	1-1/2" Insert Pump	Producing

DATE OF TEST	HOURS TESTED	CHOKE SIZE	PROD'N. FOR TEST PERIOD →	OIL—BBL.	GAS—MCF.	WATER—BBL.	GAS-OIL RATIO
1-5-94	24	n/a		80	n/a	10	n/a

FLOW. TUBING PRESS.	CASING PRESSURE	CALCULATED 24-HOUR RATE →	OIL—BBL.	GAS—MCF.	WATER—BBL.	OIL GRAVITY-API (CORR.)
n/a	n/a		80	n/a	10	43

34. DISPOSITION OF GAS (*Sold, used for fuel, vented, etc.*): Used for fuel

TEST WITNESSED BY: Dale Griffin

35. LIST OF ATTACHMENTS

36. I hereby certify that the foregoing and attached information is complete and correct as determined from all available records

SIGNED Bobbie Schuman TITLE Coordinator of Environmental and Regulatory Affairs DATE 1-18-94

*(See Instructions and Spaces for Additional Data on Reverse Side)

Title 18 U.S.C. Section 1001, makes it a crime for any person knowingly and willfully to make to any department or agency of the United States any false, fictitious or fraudulent statements or representations as to any matter within its jurisdiction.

STATE OF UTAH
DIVISION OF OIL, GAS AND MINING

RECEIVED
JAN 19 1994
DIVISION OF
OIL, GAS & MINING

REPORT OF WATER ENCOUNTERED DURING DRILLING - FORM 7 (1/89)

1. Well name and number: Balcron Monument Federal #24-12J
   API number: 43-013-31409

2. Well location: QQ SE SW section 12 township 9S range 16E county Duchesne

3. Well operator: Equitable Resources Energy Company, Balcron Oil Division
   Address: P.O. Box 21017 phone: (406) 259-7860
   Billings, MT 59104

4. Drilling contractor: Union Drilling
   Address: Drawer 40 phone: (304) 472-4610
   Buckhannon, WV 26201

5. Water encountered (continue on reverse side if necessary)

Depth		Volume (flow rate or head)	Quality (fresh or salty)
from	to		
		No measurable water encountered	
		during drilling operations.	

6. Formation tops: See Geologic Report submitted separately.

If an analysis has been made of the water encountered, please attach a copy of the report to this form.

I certify that this report is true and complete to the best of my knowledge.

Name Bobbie Schuman Signature Bobbie Schuman
Title Coordinator of Environmental and Regulatory Affairs Date 1-18-94

Comments:

RECEIVED
JAN 27 1994
DIVISION OF
OIL, GAS & MINING

UTAH DIVISION OF OIL, GAS AND MINING
EQUIPMENT INVENTORY

Operator: EQUITABLE RESOURCES COMPANY Lease: State: ____ Federal: Y
Indian: ____ Fee: ____

Well Name: MONUMENT FEDERAL # 24-12J API Number: 43-013-31409
Section: 12 Township: 9S Range: 16E County: DUCHESNE Field: MONUMENT BUTTES
Well Status: POW Well Type: Oil: Y Gas: ____

PRODUCTION LEASE EQUIPMENT: Y CENTRAL BATTERY: ____

Y Well head ____ Boiler(s) ____ Compressor ____ Separator(s)
____ Dehydrator(s) ____ Shed(s) ____ Line Heater(s) ____ Heated Separator
____ VRU ____ Heater Treater(s)

PUMPS:
____ Triplex ____ Chemical (1) Centrifugal

LIFT METHOD:
Y Pumpjack ____ Hydraulic ____ Submersible ____ Flowing

GAS EQUIPMENT:

N Gas Meters N Purchase Meter N Sales Meter

TANKS:	NUMBER		SIZE
	Y	Oil Storage Tank(s)	2-400 BARREL OIL TANKS BBLS
	Y	Water Tank(s)	1-130 BARREL PIT TANK BBLS
		Power Water Tank	BBLS
		Condensate Tank(s)	BBLS
	(1)	Propane Tank	

REMARKS: RESERVE STILL OPEN. PIT TANK ON LOCATION BUT NOT YET INSTALLED. EQUIPMENT FIRED ON CASING HEAD GAS WITH PROPANE BACKUP. CENTRIFUGAL PUMP IS GLYCOL TRACE PUMP.

Location central battery: Qtr/Qtr: ____ Section: ____ Township: ____ Range: ____

Inspector: DENNIS INGRAM Date: 1/20/94

FORM 10

STATE OF UTAH
DIVISION OF OIL, GAS AND MINING
355 West North Temple, 3 Triad, Suite 350, Salt Lake City, UT 84180-1203

MONTHLY OIL AND GAS PRODUCTION REPORT

OPERATOR NAME AND ADDRESS:

BALCRON OIL DIVISION
EQUITABLE RESOURCES ENERGY
1601 LEWIS AVE
BILLINGS MT 59102-4126

UTAH ACCOUNT NUMBER: N9890

REPORT PERIOD (MONTH/YEAR): 3 / 96

AMENDED REPORT ☐ **(Highlight Changes)**

Well Name / API Number / Entity / Location	Producing Zone	Well Status	Days Oper	Production Volumes OIL(BBL)	GAS(MCF)	WATER(BBL)
MONUMENT FEDERAL 14-5 4301331385 11492 09S 17E 5	GRRV					
MONUMENT FEDERAL 24-12J 4301331409 11492 09S 16E 12	GRRV					
BALCRON MONUMENT FEDERAL 31-1J 4301331413 11492 09S 16E 1	GRRV					
MONUMENT FEDERAL 32-1J 4301331414 11492 09S 16E 1	GRRV					
BALCRON MONUMENT FEDERAL 33-11J 4301331451 11492 09S 16E 11	GRRV					
BALCRON MONUMENT FEDERAL 42-12J 4301331486 11492 09S 16E 12	GRRV					
BALCRON MONUMENT FEDERAL 41-12J 4301331487 11492 09S 16E 12	GRRV					
BALCRON MONUMENT FEDERAL 12-7J 4301331493 11492 09S 17E 7	GRRV					
FEDERAL 24-3Y 4301331397 11493 09S 17E 3	GRRV					
FEDERAL 14-4 4304715678 11500 08S 25E 4	GRRV					
E. RED WASH 1-5 4304720174 11500 08S 25E 5	GRRV					
E. RED WASH FED 1-12 4304720207 11500 08S 24E 12	GRRV					
E. RED WASH FED 1-6 4304720208 11500 08S 25E 6	GRRV					
			TOTALS			

COMMENTS:

I hereby certify that this report is true and complete to the best of my knowledge. Date:

Name and Signature: Telephone Number:

(12/93)

EQUITABLE RESOURCES ENERGY COMPANY
BALCRON OIL DIVISION
1601 Lewis Avenue
Billings, MT 59102

Office: (406) 259-7860
FAX: (406) 245-1365 ☐
FAX: (406) 245-1361 ☒

March 22, 1996

Utah Division of Oil, Gas and Mining
355 West North Temple
Salt Lake City, UT 84180

Gentlemen:

Effective April 1, 1996, our name will change from Equitable Resources Energy Company, Balcron Oil Division to Equitable Resources Energy Company. Attached is a sundry notice reflecting that change. To simplify paperwork, I have done one sundry notice with copies for each of the wells. To this letter I have attached a list of our wells for your ease in filing the sundry notices in the well files. This should be sufficient for your purposes.

I have the listings on a spreadsheet so if it would be easier for you to have them sorted differently (for example, the Montana Board of Oil and Gas prefers them sorted by API number), please give me a call at (406) 259-7860, extension 240 and I would be glad to provide a list to your specifications.

This change affects only our company name. The physical locations of our offices and the personnel remain the same. We will be changing our well signs and ask for your patience and cooperation as this will be done as soon as possible but may take some time since we do have so many properties at which to make the change.

If you have any questions, please do not hesitate to give me a call.

Sincerely,

Bobbie Schuman

Bobbie Schuman
Regulatory and
Environmental Specialist

/hs

Enclosures

FORM 9

STATE OF UTAH

DIVISION OF OIL, GAS AND MINING

5. Lease Designation and Serial Number:	See attached listing
6. If Indian, Allottee or Tribe Name:	n/a
7. Unit Agreement Name:	See attached listing
8. Well Name and Number:	See attached listing
9. API Well Number:	See attached listing
10. Field and Pool, or Wildcat:	See attached listing

SUNDRY NOTICES AND REPORTS ON WELLS

Do not use this form for proposals to drill new wells, deepen existing wells, or to reenter plugged and abandoned wells. Use APPLICATION FOR PERMIT TO DRILL OR DEEPEN form for such proposals.

1. Type of Well: OIL ☐ GAS ☐ OTHER: See attached listing

2. Name of Operator: Equitable Resources Energy Company, Balcron Oil Division

3. Address and Telephone Number: 1601 Lewis Avenue Avenue; Billings, MT 59102 (406) 259-7860

4. Location of Well

Footages: See attached listing County: See attached list

QQ, Sec.,T.,R.,M.: State: UTAH

11. CHECK APPROPRIATE BOXES TO INDICATE NATURE OF NOTICE, REPORT, OR OTHER DATA

NOTICE OF INTENT (Submit in Duplicate)		SUBSEQUENT REPORT (Submit Original Form Only)	
☐ Abandon	☐ New Construction	☐ Abandon *	☐ New Construction
☐ Repair Casing	☐ Pull or Alter Casing	☐ Repair Casing	☐ Pull or Alter Casing
☐ Change of Plans	☐ Recomplete	☐ Change of Plans	☐ Reperforate
☐ Convert to Injection	☐ Reperforate	☐ Convert to Injection	☐ Vent or Flare
☐ Fracture Treat or Acidize	☐ Vent or Flare	☐ Fracture Treat or Acidize	☐ Water Shut-Off
☐ Multiple Completion	☐ Water Shut-Off	☒ Other Operator name change	
☐ Other _____			

Approximate date work will start _____

Date of work completion _____

Report results of **Multiple Completions** and **Recompletions** to different reservoirs on WELL COMPLETION OR RECOMPLETION REPORT AND LOG form.

* Must be accompanied by a cement verification report.

12. DESCRIBE PROPOSED OR COMPLETED OPERATIONS (Clearly state all pertinent details, and give pertinent dates. If well is directionally drilled, give subsurface locations and measured and true vertical depths for all markers and zones pertinent to this work.)

Effective April 1, 1996, operator will change its name from Equitable Resources Energy Company, Balcron Oil Division TO: Equitable Resources Energy Company. Physical location of the operator remains as: 1601 Lewis Avenue; Billings, MT 59102 (406) 259-7860, FAX: (406) 145-1361. This is to report the operator name change only. It affects the wells on the attached listing.

APR - 8 1996

13.

Name & Signature: Bobbie Schuman Title: Regulatory and Environmental Specialist Date: March 27, 1996

Bobbie Schuman

(This space for State use only)

(4\94) (See Instructions on Reverse Side)

Balcron Monument Fed. #14-12J	Monument Butte	SW SW	12	9S	16E	Duchesne	UT	WIW	Green River	U-035521-A	43-013-31411	660' FSL, 660' FWL	Vernal	Jonah
Balcron Monument Fed. #14-15	Monument Butte	SW SW	15	9S	16E	Duchesne	UT	PND	Green River	U-017985	43-013-31381	772' FSL, 543' FWL	Vernal	
Balcron Monument Fed. #14-26	Monument Butte	SW SW	26	8S	16E	Duchesne	UT	PND	Green River	U-34346	43-013-31512	660' FSL, 660' FWL	Vernal	
Balcron Monument Fed. #14-3-9-17Y	Monument Butte	SW SW	3	9S	17E	Duchesne	UT	Oil	Green River	U-64381	43-013-31535	671' FSL, 792' FWL	Vernal	
Balcron Monument Fed. #14-4	Monument Butte	SW SW	4	9S	16E	Duchesne	UT	PND	Green River	U-73086	43-013-31430	719' FSL, 607' FWL	Vernal	
Balcron Monument Fed. #14-5	Monument Butte	SW SW	5	9S	17E	Duchesne	UT	Oil	Green River	U-020250	43-013-31385	556' FSL, 517' FWL	Vernal	Jonah
Balcron Monument Fed. #14-8	Monument Butte	SW SW	8	9S	17E	Duchesne	UT	Oil	Green River	UTU-74108	43-013-31398	660' FSL, 660' FWL	Vernal	Beluga
Balcron Monument Fed. #21-10-9-17Y	Monument Butte	NE NW	10	9S	17E	Duchesne	UT	Oil	Green River	U-65210	43-013-31537	807' FNL, 2120' FWL	Vernal	
Balcron Monument Fed. #21-14J	Monument Butte	NE NW	14	9S	16E	Duchesne	UT	WIW	Green River	U-096547	43-013-31421	518' FNL, 1850' FWL	Vernal	Jonah
Balcron Monument Fed. #21-17	Monument Butte	NE NW	17	9S	17E	Duchesne	UT	Oil	Green River	U-3563-A	43-013-31387	500' FNL, 1980' FWL	Vernal	Beluga
Balcron Monument Fed. #21-25	Undesignated	NE NW	25	8S	17E	Uintah	UT	Oil	Green River	U-67845	43-047-32528	748' FNL, 1964' FWL	Vernal	
Balcron Monument Fed. #22-12J	Monument Butte	SE NW	12	9S	16E	Duchesne	UT	Oil	Green River	U-096550	43-013-15796	2018' FNL, 2099' FWL	Vernal	Jonah
Balcron Monument Fed. #22-14J	Monument Butte	SE NW	14	9S	16E	Duchesne	UT	PND	Green River	U-096547	43-013-31489	2134' FNL, 2198' FWL	Vernal	Jonah
Balcron Monument Fed. #22-17	Monument Butte	SE NW	17	9S	17E	Duchesne	UT	Oil	Green River	UTU-72106	43-013-31429	1800' FNL, 1980' FWL	Vernal	Beluga
Balcron Monument Fed. #22-20-9-18Y	Monument Butte	SE NW	20	9S	18E	Uintah	UT	Oil	Green River	U-64917	43-047-32711	1980' FNL, 1980' FWL	Vernal	
Balcron Monument Fed. #22-22-8-17Y	Monument Butte	SE NW	22	8S	17E	Duchesne	UT	Oil	Green River	U-67845	43-013-31538	1945' FNL, 2030' FWL	Vernal	
Balcron Monument Fed. #22-5	Monument Butte	SE NW	5	9S	17E	Duchesne	UT	WIW	Green River	U-020252	43-013-31384	1853' FNL, 1980' FWL	Vernal	Jonah
Balcron Monument Fed. #23-11	Monument Butte	NE SW	11	9S	16E	Duchesne	UT	WIW	Green River	U-096550	43-013-31369	1787' FSL, 2147' FWL	Vernal	Jonah
Balcron Monument Fed. #23-15	Monument Butte	NE SW	15	9S	16E	Duchesne	UT	WIW	Green River	U-017985	43-013-31373	1724' FSL, 2078' FWL	Vernal	Jonah
Balcron Monument Fed. #23-24-8-17		NE SW	24	8S	17E	Uintah	UT	PND	Green River				Vernal	
Balcron Monument Fed. #23-25	Undesignated	NE SW	25	8S	17E	Uintah	UT	Oil	Green River	U-67845	43-047-32529	1927' FSL, 2139' FWL	Vernal	
Balcron Monument Fed. #23-5	Monument Butte	NE SW	5	9S	17E	Duchesne	UT	Oil	Green River	U-020252	43-013-31383	1816 'FSL, 2057'FWL	Vernal	Jonah
Balcron Monument Fed. #24-12J	Monument Butte	SE SW	12	9S	16E	Duchesne	UT	Oil	Green River	U-035521-A	43-013-31409	539' FSL, 1777' FWL	Vernal	Jonah
Balcron Monument Fed. #24-25	Undesignated	SE SW	25	8S	17E	Uintah	UT	Oil	Green River	U-67845	43-047-32669	653' FSL, 2028' FWL	Vernal	
Balcron Monument Fed. #24-5	Monument Butte	SE SW	5	9S	17E	Duchesne	UT	WIW	Green River	U-020252	43-013-31375	765' FSL, 2243' FWL	Vernal	Jonah
Balcron Monument Fed. #24-6	Monument Butte	SE SW	6	9S	17E	Duchesne	UT	WIW	Green River	U-020252-A	43-013-31363	504' FSL, 1613' FWL	Vernal	Jonah
Balcron Monument Fed. #31-17	Monument Butte	NE NW	17	9S	17E	Duchesne	UT	Oil	Green River	UTU-72106	43-013-31428	660' FNL, 1980' FEL	Vernal	Beluga
Balcron Monument Fed. #31-1J	Monument Butte	NW NE	1	9S	16E	Duchesne	UT	Oil	Green River	U-33992	43-013-31413	660' FNL, 1980' FEL	Vernal	Jonah
Balcron Monument Fed. #31-25	Undesignated	NW NE	25	8S	17E	Uintah	UT	Oil	Green River	U-67845	43-047-32530	660' FNL, 1980' FEL	Vernal	
Balcron Monument Fed. #31-7J	Monument Butte	NW NE	7	9S	17E	Duchesne	UT	WIW	Green River	U-44426	43-013-31405	831' FNL, 1782' FEL	Vernal	Jonah
Balcron Monument Fed. #32-11	Monument Butte	SW NE	11	9S	16E	Duchesne	UT	WIW	Green River	U-096550	43-013-31386	2059' FNL, 1763' FEL	Vernal	Jonah
Balcron Monument Fed. #32-12J	Monument Butte	SW NE	12	9S	16E	Duchesne	UT	WIW	Green River	U-035521	43-013-31419	1805' FNL, 2139' FEL	Vernal	Jonah
Balcron Monument Fed. #32-14J	Monument Butte	SW NE	14	9S	16E	Duchesne	UT	PND	Green River	U-096547	43-013-31490	1980' FNL, 1980' FEL	Vernal	Jonah
Balcron Monument Fed. #32-15	Monument Butte	SW NE	15	9S	16E	Duchesne	UT	WIW	Green River	U-017985	43-013-31368	1868' FNL, 1993' FEL	Vernal	Jonah
Balcron Monument Fed. #32-17	Monument Butte	SW NE	17	9S	17E	Duchesne	UT	Oil	Green River	UTU-72106	43-013-31465	1880' FNL, 1980' FEL	Vernal	Beluga

Division of Oil, Gas and Mining
OPERATOR CHANGE WORKSHEET

Routing:
1 LEC 7-SJ ✓
2 ~~DTS~~ 8-FILE
3 VLD (GIL)
4 RJF ✓
5 LEC ✓
6 FILM ✓

Attach all documentation received by the division regarding this change.
Initial each listed item when completed. Write N/A if item is not applicable.

☐ Change of Operator (well sold) ☐ Designation of Agent
☐ Designation of Operator KKK Operator Name Change Only

The operator of the well(s) listed below has changed (EFFECTIVE DATE: 4-1-96)

TO (new operator)	EQUITABLE RESOURCES ENERGY COEROM
(address)	1601 LEWIS AVE
	BILLINGS MT 59102-4126
	phone (406) 259-7860
	account no. N9890
FROM (former operator)	EQUITABLE RESOURCES ENERGY C(
(address)	BALCRON OIL DIVISION
	1601 LEWIS AVE
	BILLINGS MT 59102-4126
	phone (406) 259-7860
	account no. N9890

Well(s) (attach additional page if needed):

Name: **SEE ATTACHED**	API: 043-31409	Entity:	Sec	Twp	Rng	Lease Type:
Name:	API:	Entity:	Sec	Twp	Rng	Lease Type:
Name:	API:	Entity:	Sec	Twp	Rng	Lease Type:
Name:	API:	Entity:	Sec	Twp	Rng	Lease Type:
Name:	API:	Entity:	Sec	Twp	Rng	Lease Type:
Name:	API:	Entity:	Sec	Twp	Rng	Lease Type:
Name:	API:	Entity:	Sec	Twp	Rng	Lease Type:

OPERATOR CHANGE DOCUMENTATION

Lec 1. (Rule R615-8-10) Sundry or other legal documentation has been received from former operator (Attach to this form). (Rec'd 4-4-96 & 4-8-96)

N/A 2. (Rule R615-8-10) Sundry or other legal documentation has been received from new operator (Attach to this form).

N/A 3. The Department of Commerce has been contacted if the new operator above is not currently operating any wells in Utah. Is company registered with the state? (yes/no) _____ If yes, show company file number: _____.

* 4. **(For Indian and Federal Wells ONLY)** The BLM has been contacted regarding this change (attach Telephone Documentation Form to this report). Make note of BLM status in comments section of this form. Management review of **Federal and Indian** well operator changes should take place prior to completion of steps 5 through 9 below.

Lec 5. Changes have been entered in the Oil and Gas Information System (Wang/IBM) ~~for each well listed above~~. (4-10-96)

Lec 6. Cardex file has been updated for each well listed above. (4-11-96)

Lec 7. Well file labels have been updated for each well listed above. (4-11-96)

Lec 8. Changes have been included on the monthly "Operator, Address, and Account Changes" memo for distribution to State Lands and the Tax Commission. (4-10-96)

Lec 9. A folder has been set up for the Operator Change file, and a copy of this page has been placed there for reference during routing and processing of the original documents.

– OVER –

OPERATOR CHANGE WORKSHEET (CONTINUED) Initial each item when completed. Write N/A if item is not applicable.

ENTITY REVIEW

Lec 1. (Rule R615-8-7) Entity assignments have been reviewed for all wells listed above. Were entity changes made? (yes/no) ___ (If entity assignments were changed, attach copies of Form 6, Entity Action Form).

N/A 2. State Lands and the Tax Commission have been notified through normal procedures of entity changes.

BOND VERIFICATION (Fee wells only) #5578314 ($80,000) Seneca Ins. Co. (Bond Rider In Progress)

Lec 1. (Rule R615-3-1) The new operator of any fee lease well listed above has furnished a proper bond.

___ 2. A copy of this form has been placed in the new and former operators' bond files.

N/A 3. The former operator has requested a release of liability from their bond (yes/no) ___. Today's date _____ 19___. If yes, division response was made by letter dated _____ 19___.

LEASE INTEREST OWNER NOTIFICATION RESPONSIBILITY

N/A 1. (Rule R615-2-10) The former operator/lessee of any **fee lease** well listed above has been notified by letter dated _____ 19___, of their responsibility to notify any person with an interest in such lease of the change of operator. Documentation of such notification has been requested. 4/22/96

DTS 2. Copies of documents have been sent to State Lands for changes involving **State leases.** Sent to Ed Bonner — Trust Lands

FILMING

KDR ___ 1. All attachments to this form have been microfilmed. Date: May 20 1996.

FILING

___ 1. Copies of all attachments to this form have been filed in each well file.

___ 2. The original of this form and the original attachments have been filed in the Operator Change file.

COMMENTS

9/6/96 Blm/BIA "Formal approval not necessary".

EQUITABLE **RESOURCES**
ENERGY COMPANY

WESTERN REGION

1601 Lewis Avenue
Billings, MT 59102

Office: (406) 259-7860
FAX: (406) 245-1365 ☐
FAX: (406) 245-1361 ☐

May 27, 1997

Utah Board Of Oil, Gas, & Mining
1594 West North Temple
Suite-1220
Salt Lake City, Utah 84114

In accordance with your request please find enclosed the 1997 produced water analysis for the Uinta Basin waterflood and water disposal operations which are operated by Equitable Resources Energy Company. These water analysis are for wells that are re-injecting or disposing produced water back into the Green River Formation via the following facilities:

Jonah Secondary Recovery Unit
Beluga Secondary Recovery Unit
Coyote Basin Secondary Recovery Unit
Castle Draw (State Section-2) Pilot Waterflood
Pariette Bench Water Disposal Well #4

Equitable Resources Energy Company inadvertently failed to submit a copy of these water analysis when they were sent to the EPA and BLM. If there are any questions please contact me at our Billings, Montana office at 406-259-7860.

Respectfully,

John Zellitti

John Zellitti
District Production Engineer

Champion Technologies, Inc.
2060 SOUTH 1500 EAST
VERNAL, UTAH 84078
Telephone (801) 789-4327

Water Analysis Report

Jonah Unit

Customer :	EREC - Western Oil Company	**Field :**	Monument Butte Field
Address :	1601 Lewis Avenue	**Lease :**	Monument Federal Lease
City :	Billings	**Location :**	Well No. 24-12
State :	MT **Postal Code :** 59104-	**Sample Point :**	wellhead
Attention :	John Zellitti	**Date Sampled :**	23-Jan-97
cc1 :	Dan Farnsworth	**Date Received :**	23-Jan-97
cc2 :	Joe Ivey	**Date Reported:**	08-Feb-97
cc3 :		**Salesman :**	Lee Gardiner
		Analyst :	Karen Hawkins Allen

CATIONS			ANIONS		
Calcium :	160	mg/l	**Chloride:**	5,000	mg/l
Magnesium :	24	mg/l	**Carbonate:**	60	mg/l
Barium :	0	mg/l	**Bicarbonate:**	610	mg/l
Strontium :	0	mg/l	**Sulfate:**	188	mg/l
Iron :	2.0	mg/l			
Sodium :	3333	mg/l			
pH (field) :	8.43		**Specific Gravity :**	1.005	grams/ml
Temperature :	85	degrees F	**Total Dissolved Solids :**	9,377	ppm
Ionic Strength :	0.15		**CO2 in Water :**	1	mg/l
			CO2 in Gas :	0.03	mole %
Resistivity :		ohm/meters	**H2S in Water :**	0.0	mg/l
Ammonia :		ppm	**O2 in Water :**	0.000	ppm
Comments :					

SI calculations based on Tomson-Oddo

Calcite (CaCO3) SI :	1.55	**Calcite PTB :**	129.9
Gypsum (CaSO4) SI :	-1.98	**Gypsum PTB :**	N/A
Barite (BaSO4) SI :	N/A	**Barite PTB :**	N/A
Celestite (SrSO4) SI :	N/A	**Celestite PTB :**	N/A

FORM 10

STATE OF UTAH
DIVISION OF OIL, GAS AND MINING
1594 West North Temple, Suite 1210, PO Box 145801, Salt Lake City, UT 84114-5801

MONTHLY OIL AND GAS PRODUCTION REPORT

OPERATOR NAME AND ADDRESS:

C/O CRAZY MTN O&G SVS'S
EQUITABLE RESOURCES ENERGY
PO BOX 577
LAUREL MT 59044

UTAH ACCOUNT NUMBER: N9890

REPORT PERIOD (MONTH/YEAR): 9 / 97

AMENDED REPORT ☐ **(Highlight Changes)**

Well Name / API Number / Entity / Location	Producing Zone	Well Status	Days Oper	Production Volumes OIL(BBL)	GAS(MCF)	WATER(BBL)
CASTLE PK FED 33-15 4301330632 11492 09S 16E 15	GRRV			U017985	Jonah (GR) Unit	
CASTLE PK FED 42-15 4301330633 11492 09S 16E 15	GRRV			"		
CASTLE PK FED. 22-15 4301330634 11492 09S 16E 15	GRRV			"		
MONUMENT BUTTE 1-23 4301330646 11492 09S 16E 1	GRRV			U18399		
MONUMENT BUTTE 1-14 4301330703 11492 09S 16E 1	GRRV			"		
MONUMENT BUTTE 1-43 4301330734 11492 09S 16E 1	GRRV			U52013		
MONUMENT BUTTE 1-34 4301330736 11492 09S 16E 1	GRRV			"		
GETTY 12-1 4301330889 11492 09S 16E 12	GRRV			U44426		
GETTY 7A 4301330926 11492 09S 17E 7	GRRV			"		
GETTY 7C 4301330961 11492 09S 17E 7	GRRV			"		
MONUMENT FEDERAL 23-5J 4301331383 11492 09S 17E 5	GRRV			U020252		
MONUMENT FEDERAL 14-5 4301331385 11492 09S 17E 5	GRRV			"		
MONUMENT FEDERAL 24-12J 4301331409 11492 09S 16E 12	GRRV			U035521A	↓	
			TOTALS			

COMMENTS:

I hereby certify that this report is true and complete to the best of my knowledge. Date:

Name and Signature: Telephone Number:

12/93)

FORM 9

STATE OF UTAH

DIVISION OF OIL, GAS AND MINING

SUNDRY NOTICES AND REPORTS ON WELLS

Do not use this form for proposals to drill new wells, deepen existing wells, or to reenter plugged and abandoned wells. Use APPLICATION FOR PERMIT TO DRILL OR DEEPEN form for such proposals.

1. Type of Well: OIL ☒ GAS ☐ OTHER:	5. Lease Designation and Serial Number: See Attached
	6. If Indian, Allottee or Tribe Name: n/a
	7. Unit Agreement Name: See Attached
	8. Well Name and Number: See Attached
2. Name of Operator: Inland Production Company	9. API Well Number: See Attached
3. Address and Telephone Number: 475 - 17th Street, Suite 1500, Denver, CO 80202	10. Field and Pool, or Wildcat: See Attached
4. Location of Well Footages: See Attached Exhibit QQ, Sec.,T.,R.,M.:	County: State:

RECEIVED
OCT 13 1997

11. CHECK APPROPRIATE BOXES TO INDICATE NATURE OF NOTICE, REPORT, OR OTHER DATA

NOTICE OF INTENT (Submit in Duplicate)		SUBSEQUENT REPORT (Submit Original Form Only)	
☐ Abandon	☐ New Construction	☐ Abandon *	☐ New Construction
☐ Repair Casing	☐ Pull or Alter Casing	☐ Repair Casing	☐ Pull or Alter Casing
☐ Change of Plans	☐ Recomplete	☐ Change of Plans	☐ Reperforate
☐ Convert to Injection	☐ Reperforate	☐ Convert to Injection	☐ Vent or Flare
☐ Fracture Treat or Acidize	☐ Vent or Flare	☐ Fracture Treat or Acidize	☐ Water Shut-Off
☐ Multiple Completion	☐ Water Shut-Off	☒ Other Change of Operator	
☒ Other Change of Operator			
Approximate date work will start _____		Date of work completion 9-30-97	

Report results of Multiple Completions and Recompletions to different reservoirs on WELL COMPLETION OR RECOMPLETION REPORT AND LOG form.

* Must be accompanied by a cement verification report.

12. DESCRIBE PROPOSED OR COMPLETED OPERATIONS (Clearly state all pertinent details, and give pertinent dates. If well is directionally drilled, give subsurface locations and measured and true vertical depths for all markers and zones pertinent to this work.)

Effective September 30, 1997, Inland Production Company will take over operations of the wells on the attached list. The previous operator was :

Equitable Resources Energy Company
1601 Lewis Avenue
Billings, MT 59102

Effective September 30, 1997, Inland Production Company is responsible under the terms and conditions of the leases for operations conducted on the leased lands or a portion thereof under State of Utah Statewide Bond No. 4471291.

OCT 10 1997

13.

Name & Signature: Chris Potter Title: CHRIS A. POTTER, ATTORNEY-IN-FACT Date: 9/30/97

(This space for State use only)

(See Instructions on Reverse Side)

Inland Resources Change of Operator

WELL NAME	LOCATION	COUNTY	ST	FIELD NAME	API NUMBER	LEASE NO.	AGEEMENT
MONUMENT BUTTE #12-12	SWNW 12 9S 16E	DUCHESNE	UT	MONUMENT BUTTE (J)	43-013-31410-00	UTU096550	UTU72086A
MONUMENT BUTTE #13-5	NWSW 5 9S 17E	DUCHESNE	UT	MONUMENT BUTTE (J)	43-013-31370-00		UTU72086A
MONUMENT BUTTE #14-12	SWSW 12 9S 16E	DUCHESNE	UT	MONUMENT BUTTE (J)	43-013-31411-00		UTU72086A
MONUMENT BUTTE #21-14	NENW 14 9S 16E	DUCHESNE	UT	MONUMENT BUTTE (J)	43-013-31421-00		UTU72086A
MONUMENT BUTTE #22-5	SENW 5 9S 17E	DUCHESNE	UT	MONUMENT BUTTE (J)	43-013-31384-00	UTU020252	UTU72086A
MONUMENT BUTTE #22-12J	SENW 12 9S 16E	DUCHESNE	UT	MONUMENT BUTTE (J)	43-013-15796-00	UTU096550	UTU72086A
MONUMENT BUTTE #23-11	NESW 11 9S 16E	DUCHESNE	UT	MONUMENT BUTTE (J)	43-013-31369-00	UTU096550	UTU72086A
MONUMENT BUTTE #24-5	SESW 5 9S 17E	DUCHESNE	UT	MONUMENT BUTTE (J)	43-013-31375-00	UTU020252	UTU72086A
MONUMENT BUTTE #31-7	NWNE 7 9S 17E	DUCHESNE	UT	MONUMENT BUTTE (J)	43-013-31405-00	UTU72106	UTU72086A
MONUMENT BUTTE #32-11	SWNE 11 9S 16E	DUCHESNE	UT	MONUMENT BUTTE (J)	43-013-31386-00		UTU72086A
MONUMENT BUTTE #32-12	SWNE 12 9S 16E	DUCHESNE	UT	MONUMENT BUTTE (J)	43-013-31419-00		UTU72086A
MONUMENT BUTTE #41-14	NENE 14 9S 16E	DUCHESNE	UT	MONUMENT BUTTE (J)	43-013-31408-00	UTU096550	UTU72086A
MONUMENT BUTTE #43-11	NESE 11 9S 16E	DUCHESNE	UT	MONUMENT BUTTE (J)	43-013-31002-00	UTU096550	UTU72086A
MONUMENT BUTTE FED #13-11J	NWSW 11 9S 16E	DUCHESNE	UT	MONUMENT BUTTE (J)	43-013-15790-00	UTU096547	UTU72086A
MONUMENT BUTTE FED #31-1J	NW NE 12 9S 16E	DUCHESNE	UT	MONUMENT BUTTE (J)	43-013-31413-00	UTU33992	UTU72086A
MONUMENT BUTTE FED #33-11J	NWSE 11 9S 16E	DUCHESNE	UT	MONUMENT BUTTE (J)	43-013-31451-00	UTU096550	UTU72086A
MONUMENT BUTTE FED #41-12J	NE NE 12 9S 16E	DUCHESNE	UT	MONUMENT BUTTE (J)	43-013-31487-00	UTU44426	UTU72086A
MONUMENT BUTTE FED #42-11J	SENE 11 9S 16E	DUCHESNE	UT	MONUMENT BUTTE (J)	43-013-30066-00	UTU096550	UTU72086A
MONUMENT BUTTE FED #42-12J	SENE 12 9S 16E	DUCHESNE	UT	MONUMENT BUTTE (J)	43-013-31486-00	UTU035521	UTU72086A
MONUMENT BUTTE FED. #1-13	NWSW 1 9S 16E	DUCHESNE	UT	MONUMENT BUTTE (J)	43-013-30702-00	UTU18399	UTU72086A
MONUMENT BUTTE FED. #1-33	NWSE 1 9S 16E	DUCHESNE	UT	MONUMENT BUTTE (J)	43-013-30735-00	UTU52013	UTU72086A
MONUMENT BUTTE FED. #11-6	NWNW 6 9S 17E	DUCHESNE	UT	MONUMENT BUTTE (J)	43-013-31362-00	UTU020252A	UTU72086A
MONUMENT BUTTE FED. #12-11	SWNW 11 9S 16E	DUCHESNE	UT	MONUMENT BUTTE (J)	43-013-31417-00	UTU096550	UTU72086A
MONUMENT BUTTE FED. #14-5	SWSW 5 9S 17E	DUCHESNE	UT	MONUMENT BUTTE (J)	43-013-31385-00	UTU020252	UTU72086A
MONUMENT BUTTE FED. #14-11	SWSW 11 9S 16E	DUCHESNE	UT	MONUMENT BUTTE (J)	43-013-31374-00	UTU096547	UTU72086A
MONUMENT BUTTE FED. #23-5	NESW 5 9S 17E	DUCHESNE	UT	MONUMENT BUTTE (J)	43-013-31383-00	UTU020252	UTU72086A
MONUMENT BUTTE FED. #23-15	NESW 15 9S 17E	DUCHESNE	UT	MONUMENT BUTTE (J)	43-013-31373-00	UTU017985	UTU72086A
MONUMENT BUTTE FED. #24-6	SESW 6 9S 17E	DUCHESNE	UT	MONUMENT BUTTE (J)	43-013-31363-00	UTU020252A	UTU72086A
MONUMENT BUTTE FED. #24-12J	SESW 12 9S 16E	DUCHESNE	UT	MONUMENT BUTTE (J)	43-013-31409-00	UTU035521A	UTU72086A
MONUMENT BUTTE FED. #32-1J	SWNE 1 9S 16E	DUCHESNE	UT	MONUMENT BUTTE (J)	43-013-31414-00	UTU33992	UTU72086A
MONUMENT BUTTE FED. #32-15	SWNE 15 9S 16E	DUCHESNE	UT	MONUMENT BUTTE (J)	43-013-31368-00	UTU017985	UTU72086A
MONUMENT BUTTE FED. #33-6	NWSE 6 9S 17E	DUCHESNE	UT	MONUMENT BUTTE (J)	43-013-31361-00	UTU020252A	UTU72086A
MONUMENT BUTTE FED. #34-10	SWSE 10 9S 16E	DUCHESNE	UT	MONUMENT BUTTE (J)	43-013-31416-00	UTU017985	UTU72086A
MONUMENT BUTTE FED. #41-15	NENE 15 9S 16E	DUCHESNE	UT	MONUMENT BUTTE (J)	43-013-31367-00	UTU017985	UTU72086A
MONUMENT BUTTE FED. #42-1	SENE 1 9S 16E	DUCHESNE	UT	MONUMENT BUTTE (J)	43-013-31404-00	UTU40652	UTU72086A
MONUMENT BUTTE FED. #42-6	SENE 6 9S 17E	DUCHESNE	UT	MONUMENT BUTTE (J)	43-013-31364-00	UTU020252A	UTU72086A
MONUMENT BUTTE FED. #44-1J	SESE 1 9S 16E	DUCHESNE	UT	MONUMENT BUTTE (J)	43-013-31415-00	UTU44426	UTU72086A
MONUMENT FEDERAL #11-7J	NW NW 7 9S 17E	DUCHESNE	UT	MONUMENT BUTTE (J)	43-013-31492-00	UTU44426	UTU72086A
MONUMENT FEDERAL #12-7J	SWNW 7 9S 17E	DUCHESNE	UT	MONUMENT BUTTE (J)	43-013-31493-00	U-44426	UTU72086A

EQUITABLE RESOURCES
ENERGY COMPANY
WESTERN REGION
(406) 259-7860 Telephone
(406) 245-1361 Fax

December 10, 1997

Lisha
State of Utah
Division of Oil, Gas and Mining
1594 West North Temple, Suite 1210
Box 145801
Salt Lake City, UT 84114-5801

Dear Lisha:

RE: Equitable Sale of Utah Properties

Effective September 30, 1997, Equitable Resources Energy Company sold all of its Utah properties to Inland Production Company.

Please feel free to contact me if you require additional information.

Sincerely,

Molly Conrad

Molly Conrad
Agent for Equitable Resources
Energy Company

/mc

Crazy Mountain Oil & Gas Services
P.O. Box 577
Laurel, MT 59044
(406) 628-4164
(406) 628-4165

TO: Lisha
St of Utah.

FROM. Molly Conrad
Crazy Mountain Oil & Gas Services
(406) 628-4164

Pages Attached - Including Cover Sheet 2.

NOTE: Here is the letter you requested. Call if you need anything further.

United States Department of the Interior

BUREAU OF LAND MANAGEMENT
Utah State Office
P.O. Box 45155
Salt Lake City, UT 84145-0155

IN REPLY REFER TO
UT-931

January 13, 1998

Inland Production Company
475 17th Street, Suite 1500
Denver, Colorado 80202

Re: Jonah (Green River) Unit
Duchesne County, Utah

Gentlemen:

On January 13, 1998, we received an indenture dated November 17, 1997, whereby Equitable Resources Energy Company resigned as Unit Operator and Inland Production Company was designated as Successor Unit Operator for the Jonah (Green River) Unit, Duchesne County, Utah.

This indenture was executed by all required parties and the signatory parties have complied with Sections 5 and 6 of the unit agreement. The instrument is hereby approved effective January 13, 1998. In approving this designation, the Authorized Officer neither warrants nor certifies that the designated party has obtained all required approval that would entitle it to conduct operations under Jonah (Green River) Unit Agreement.

Your statewide (Utah) oil and gas bond No. 0056 will be used to cover all operations within the Jonah (Green River) Unit.

It is requested that you notify all interested parties of the change in unit operator. Copies of the approved instruments are being distributed to the appropriate federal offices, with one copy returned herewith.

Sincerely,

/s/ Robert A. Henricks

Robert A. Henricks
Chief, Branch of Fluid Minerals

Enclosure
bcc: District Manager - Vernal (w/enclosure)
Division of Oil, Gas & Mining
Minerals Adjudication Group U-932
File - Jonah (Green River) Unit (w/enclosure)
MMS - Data Management Division
Agr. Sec. Chron
Fluid Chron
U-931:TAThompson:tt:1/13/98

WELL STATUS REPORTS
UTAH STATE OFFICE

INSPECTION ITEM	API NO.	WELL NUMBER	QTQT	SEC	TWN	RNG	WELL STATUS	LEASE NAME	OPERATOR
** INSPECTION ITEM UTU72086A		JONAH (GR) SECONDARY RECOVERY UNIT							
UTU72086A	43013151110OS1	1	NWSW	12	9S	16E	POW	UTU035521A	EQUITABLE RESOURCES ENERG
UTU72086A	43013157800OS1	1	NWNW	5	9S	17E	POW	UTU020252	EQUITABLE RESOURCES ENERG
UTU72086A	43013157790OS1	1	SESE	6	9S	17E	WIW	UTU020252A	EQUITABLE RESOURCES ENERG
UTU72086A	43013157890OS1	1	SESW	11	9S	16E	POW	UTU096547	EQUITABLE RESOURCES ENERG
UTU72086A	43013157920OS1	1	SESE	11	9S	16E	POW	UTU096550	EQUITABLE RESOURCES ENERG
UTU72086A	43013307020OS1	1-13	NWSW	1	9S	16E	WIW	UTU18399	EQUITABLE RESOURCES ENERG
UTU72086A	43013307030OS1	1-14	SWSW	1	9S	16E	POW	UTU18399	EQUITABLE RESOURCES ENERG
UTU72086A	43013306460OS1	1-23	NESW	1	9S	16E	POW	UTU18399	EQUITABLE RESOURCES ENERG
UTU72086A	43013307010OS1	1-24	SESW	1	9S	16E	WIW	UTU18399	EQUITABLE RESOURCES ENERG
UTU72086A	43013307350OS1	1-33	NWSE	1	9S	16E	WIW	UTU52013	EQUITABLE RESOURCES ENERG
UTU72086A	43013307360OS1	1-34	SWSE	1	9S	16E	POW	UTU52013	EQUITABLE RESOURCES ENERG
UTU72086A	43013307340OS1	1-43	NESE	1	9S	16E	POW	UTU52013	EQUITABLE RESOURCES ENERG
UTU72086A	43013313620OS1	11-6	L4	6	9S	17E	WIW	UTU020252A	EQUITABLE RESOURCES ENERG
UTU72086A	43013314920OS1	11-7J	NWNW	7	9S	17E	WIW	UTU44426	EQUITABLE RESOURCES ENERG
UTU72086A	43013308890OS1	12-1	NWNE	12	9S	16E	POW	UTU44426	EQUITABLE RESOURCES ENERG
UTU72086A	43013314170OS1	12-11J	SWNW	11	9S	16E	WIW	UTU096550	EQUITABLE RESOURCES ENERG
UTU72086A	43013314100OS1	12-12J	SWNW	12	9S	16E	WIW	UTU096550	EQUITABLE RESOURCES ENERG
UTU72086A	43013306110OS1	12-5	SWNW	5	9S	17E	POW	UTU020252	EQUITABLE RESOURCES ENERG
UTU72086A	43013305820OS1	12-6	SWNW	6	9S	17E	POW	UTU020252A	EQUITABLE RESOURCES ENERG
UTU72086A	43013314930OS1	12-7J	SWNW	7	9S	17E	POW	UTU44426	EQUITABLE RESOURCES ENERG
UTU72086A	43013157900OS1	13-11J	NWSW	11	9S	16E	POW	UTU096547	EQUITABLE RESOURCES ENERG
UTU72086A	43013313700OS1	13-5	NWSW	5	9S	17E	WIW	UTU020252	EQUITABLE RESOURCES ENERG
UTU72086A	43013309180OS1	13-6	NWSW	6	9S	17E	WIW	UTU020252A	EQUITABLE RESOURCES ENERG
UTU72086A	43013313740OS1	14-11	SWSW	11	9S	16E	WIW	UTU096547	EQUITABLE RESOURCES ENERG
UTU72086A	43013314110OS1	14-12J	SWSW	12	9S	16E	WIW	UTU035521A	EQUITABLE RESOURCES ENERG
UTU72086A	43013313850OS1	14-5	SWSW	5	9S	17E	POW	UTU020252	EQUITABLE RESOURCES ENERG
UTU72086A	43013151120OS1	2	NWSE	12	9S	16E	POW	UTU035521	EQUITABLE RESOURCES ENERG
UTU72086A	43013157930OS1	2	NWNE	14	9S	16E	POW	UTU096550	EQUITABLE RESOURCES ENERG
UTU72086A	43013306030OS1	2-1	L1	1	9S	16E	POW	UTU33992	EQUITABLE RESOURCES ENERG
~~UTU72086A~~	~~43013314060OX1~~	~~21-12J~~	~~NENW~~	~~12~~	~~9S~~	~~16E~~	~~ABD~~	~~UTU096550~~	~~EQUITABLE RESOURCES ENERG~~
UTU72086A	43013314210OS1	21-14J	NENW	14	9S	16E	WIW	UTU096547	EQUITABLE RESOURCES ENERG
~~UTU72086A~~	~~43013314220OX1~~	~~21-15J~~	~~NENW~~	~~15~~	~~9S~~	~~16E~~	~~ABD~~	~~UTU017985~~	~~EQUITABLE RESOURCES ENERG~~
UTU72086A	43013306120OS1	21-5	NENW	5	9S	17E	POW	UTU020252	EQUITABLE RESOURCES ENERG
UTU72086A	43013305840OS1	21-6	L3	6	9S	17E	POW	UTU020252A	EQUITABLE RESOURCES ENERG
UTU72086A	43013157960OS2	22-12J	SENW	12	9S	16E	POW	UTU096550	EQUITABLE RESOURCES ENERG
UTU72086A	43013306340OS1	22-15	SENW	15	9S	16E	POW	UTU017985	EQUITABLE RESOURCES ENERG
UTU72086A	43013313840OS1	22-5	SENW	5	9S	17E	WIW	UTU020252	EQUITABLE RESOURCES ENERG
UTU72086A	43013309190OS1	22-6	SENW	6	9S	17E	WIW	UTU020252A	EQUITABLE RESOURCES ENERG
UTU72086A	43013313690OS1	23-11	NESW	11	9S	16E	WIW	UTU096550	EQUITABLE RESOURCES ENERG
UTU72086A	43013313730OS1	23-15	NESW	15	9S	16E	WIW	UTU017985	EQUITABLE RESOURCES ENERG
UTU72086A	43013313830OS1	23-5	NESW	5	9S	17E	POW	UTU020252	EQUITABLE RESOURCES ENERG
UTU72086A	43013305580OS1	23-6	NESW	6	9S	17E	POW	UTU020252A	EQUITABLE RESOURCES ENERG
UTU72086A	43013314090OS1	24-12J	SESW	12	9S	16E	POW	UTU035521A	EQUITABLE RESOURCES ENERG
UTU72086A	43013306310OS1	24-15	SESW	15	9S	16E	POW	UTU017985	EQUITABLE RESOURCES ENERG
UTU72086A	43013313750OS1	24-5	SESW	5	9S	17E	WIW	UTU020252	EQUITABLE RESOURCES ENERG
UTU72086A	43013313630OS1	24-6	SESW	6	9S	17E	WIW	UTU020252A	EQUITABLE RESOURCES ENERG
UTU72086A	43013157910OS1	3	NWNW	14	9S	16E	POW	UTU096547	EQUITABLE RESOURCES ENERG
UTU72086A	43013306130OS1	31-15	NWNE	15	9S	16E	POW	UTU017985	EQUITABLE RESOURCES ENERG

WELL STATUS REPORTS
UTAH STATE OFFICE

INSPECTION ITEM	API NO.	WELL NUMBER	QTQT	SEC	TWN	RNG	WELL STATUS	LEASE NAME	OPERATOR
UTU72086A	4301331413005S1	31-1J	L2	1	9S	16E	POW	UTU33992	EQUITABLE RESOURCES ENERG
UTU72086A	4301331195005S1	31-6	L2	6	9S	17E	WIW	UTU020252A	EQUITABLE RESOURCES ENERG
UTU72086A	4301331405005S1	31-7J	NWNE	7	9S	17E	WIW	UTU44426	EQUITABLE RESOURCES ENERG
UTU72086A	4301331386005S1	32-11	SWNE	11	9S	16E	WIW	UTU096550	EQUITABLE RESOURCES ENERG
UTU72086A	4301331419005S1	32-12J	SWNE	12	9S	16E	WIW	UTU035521	EQUITABLE RESOURCES ENERG
UTU72086A	4301331368005S1	32-15	SWNE	15	9S	16E	WIW	UTU017985	EQUITABLE RESOURCES ENERG
UTU72086A	4301331414005S1	32-1J	SWNE	1	9S	16E	POW	UTU33992	EQUITABLE RESOURCES ENERG
UTU72086A	4301330559005S1	32-6	SWNE	6	9S	17E	POW	UTU020252A	EQUITABLE RESOURCES ENERG
UTU72086A	4301331451005S1	33-11J	NWSE	11	9S	16E	OSI	UTU096550	EQUITABLE RESOURCES ENERG
UTU72086A	4301330632005S1	33-15	NWSE	15	9S	16E	POW	UTU017985	EQUITABLE RESOURCES ENERG
UTU72086A	4301331361005S1	33-6	NWSE	6	9S	17E	WIW	UTU020252A	EQUITABLE RESOURCES ENERG
UTU72086A	4301331416005S1	34-10J	SWSE	10	9S	16E	WIW	UTU017985	EQUITABLE RESOURCES ENERG
UTU72086A	4301331003005S1	34-11	SWSE	11	9S	16E	WIW	UTU096550	EQUITABLE RESOURCES ENERG
UTU72086A	4301330586005S1	34-6	SWSE	6	9S	17E	POW	UTU020252A	EQUITABLE RESOURCES ENERG
UTU72086A	4301330742005S1	4	NESW	12	9S	16E	WIW	UTU035521A	EQUITABLE RESOURCES ENERG
UTU72086A	4301315795005S1	4	SENW	11	9S	16E	POW	UTU096550	EQUITABLE RESOURCES ENERG
UTU72086A	4301331487005S1	41-12J	NENE	12	9S	16E	POW	UTU44426	EQUITABLE RESOURCES ENERG
UTU72086A	4301331408005S1	41-14J	NENE	14	9S	16E	WIW	UTU096550	EQUITABLE RESOURCES ENERG
UTU72086A	4301331367005S1	41-15	NENE	15	9S	16E	WIW	UTU017985	EQUITABLE RESOURCES ENERG
UTU72086A	4301330581005S1	41-6	NENE	6	9S	17E	POW	UTU020252A	EQUITABLE RESOURCES ENERG
UTU72086A	4301330066005S1	42-11J	SENE	11	9S	16E	POW	UTU096550	EQUITABLE RESOURCES ENERG
UTU72086A	4301331486005S1	42-12J	SENE	12	9S	16E	POW	UTU035521	EQUITABLE RESOURCES ENERG
UTU72086A	4301330633005S1	42-15	SENE	15	9S	16E	POW	UTU017985	EQUITABLE RESOURCES ENERG
UTU72086A	4301331404005S1	42-1J	SENE	1	9S	16E	WIW	UTU40652	EQUITABLE RESOURCES ENERG
UTU72086A	4301331364005S1	42-6	SENE	6	9S	17E	WIW	UTU020252A	EQUITABLE RESOURCES ENERG
UTU72086A	4301331002005S1	43-11J	NESE	11	9S	16E	WIW	UTU096550	EQUITABLE RESOURCES ENERG
UTU72086A	4301330583005S1	43-6	NESE	6	9S	17E	POW	UTU020252A	EQUITABLE RESOURCES ENERG
UTU72086A	4301330630005S1	44-10	SESE	10	9S	16E	POW	UTU017985	EQUITABLE RESOURCES ENERG
UTU72086A	4301331415005S1	44-1J	SESE	1	9S	16E	WIW	UTU44426	EQUITABLE RESOURCES ENERG
UTU72086A	4301330926005S1	7-A	NENE	7	9S	17E	POW	UTU44426	EQUITABLE RESOURCES ENERG
UTU72086A	4301330961005S1	7-C	NENW	7	9S	17E	POW	UTU44426	EQUITABLE RESOURCES ENERG

JONAH (GREEN RIVER) UNIT

DUCHESNE COUNTY, UTAH

EFFECTIVE: JULY 1, 1993

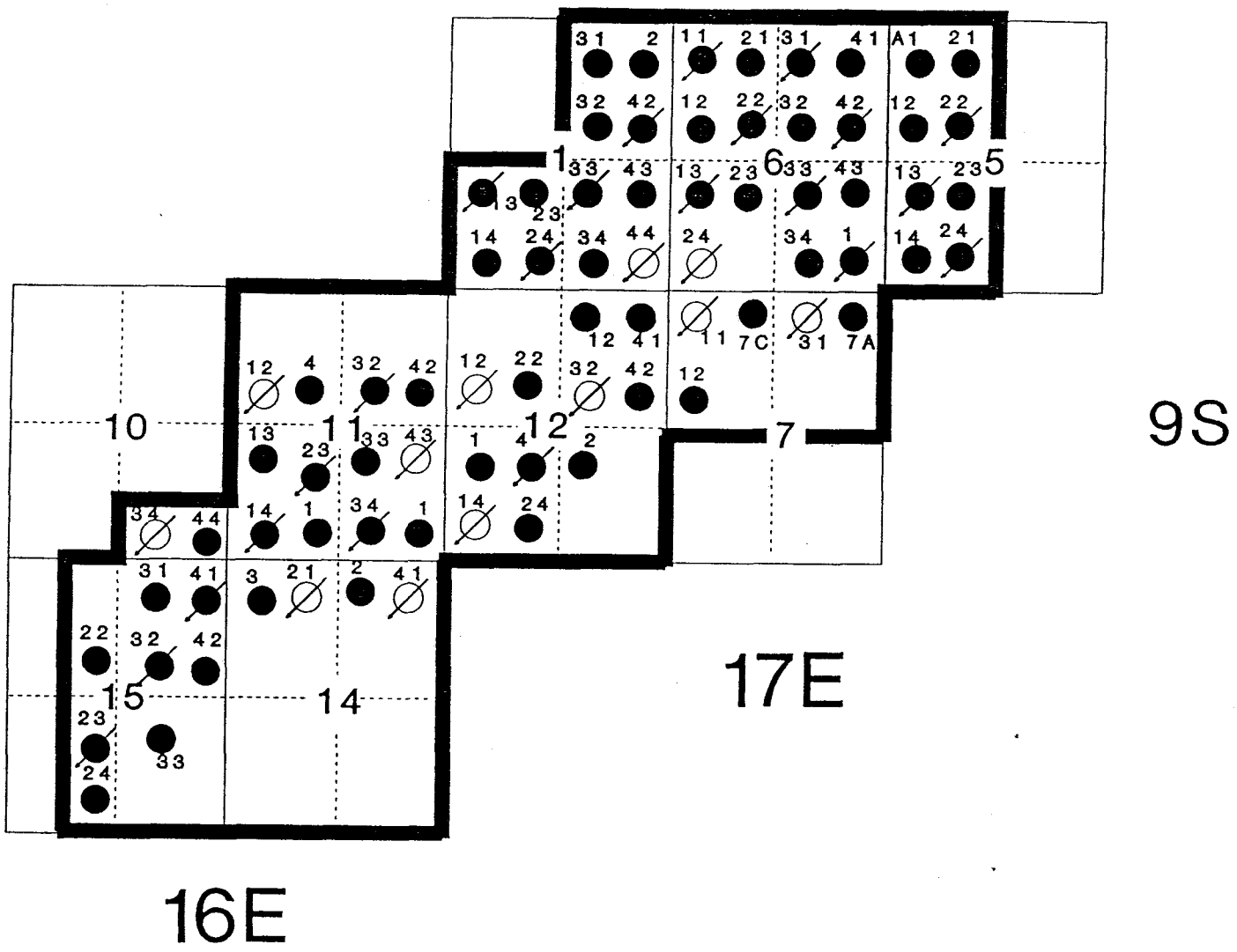

UNIT OUTLINE (UTU72086A)

4,221.61 ACRES

SECONDARY ALLOCATION
FEDERAL 100.00%

Division of Oil, Gas and Mining

OPERATOR CHANGE WORKSHEET

Routing:	
1-LEC	6-LEC
2-GLH	7-KAS
3-DTS/STS	8-SJ
4-VLD	9-FILE
5-JRB	

Attach all documentation received by the division regarding this change.
Initial each listed item when completed. Write N/A if item is not applicable.

XXX Change of Operator (well sold) ☐ Designation of Agent
☐ Designation of Operator ☐ Operator Name Change Only

The operator of the well(s) listed below has changed, **effective:** 9-30-97

TO: (new operator)	INLAND PRODUCTION COMPANY	**FROM:** (old operator)	EQUITABLE RESOURCES ENERGY
(address)	PO BOX 1446	(address)	PO BOX 577
	ROOSEVELT UT 84066		LAUREL MT 59044
			C/O CRAZY MTN O&G SVS
	Phone: (801)722-5103		Phone: (406)628-4164
	Account no. N5160		Account no. N9890

WELL(S) attach additional page if needed: ***JONAH (GREEN RIVER) UNIT**

Name:	**SEE ATTACHED**	API:	43-013-31409	Entity:	____	S ____	T ____	R ____	Lease:	____
Name:	____	API:	____	Entity:	____	S ____	T ____	R ____	Lease:	____
Name:	____	API:	____	Entity:	____	S ____	T ____	R ____	Lease:	____
Name:	____	API:	____	Entity:	____	S ____	T ____	R ____	Lease:	____
Name:	____	API:	____	Entity:	____	S ____	T ____	R ____	Lease:	____
Name:	____	API:	____	Entity:	____	S ____	T ____	R ____	Lease:	____
Name:	____	API:	____	Entity:	____	S ____	T ____	R ____	Lease:	____

OPERATOR CHANGE DOCUMENTATION

Lec 1. (r649-8-10) Sundry or other legal documentation has been received from the **FORMER** operator (attach to this form). (Rec'd 12-10-97)

Lec 2. (r649-8-10) Sundry or other legal documentation has been received from the **NEW** operator (Attach to this form). (Rec'd 10-13-97)

N/A 3. The **Department of Commerce** has been contacted if the new operator above is not currently operating any wells in Utah. Is the company **registered with the state?** (yes/no) ____ If yes, show company file number: ____.

Lec 4. **FOR INDIAN AND FEDERAL WELLS ONLY.** The BLM has been contacted regarding this change. Make note of BLM status in comments section of this form. BLM approval of **Federal** and **Indian** well operator changes should ordinarily take place prior to the division's approval, and before the completion of **steps 5 through 9** below.

Lec 5. Changes have been entered in the **Oil and Gas Information System** (3270) for each well listed above. (1-14-98) * UIC/QuattroPro 1-14-98 & UIC/DBase 1-14-98.

Lec 6. **Cardex** file has been updated for each well listed above.

Lec 7. Well **file labels** have been updated for each well listed above.

Lec 8. Changes have been included on the monthly "Operator, Address, and Account Changes" **memo** for distribution to Trust Lands, Sovereign Lands, UGS, Tax Commission, etc. (1-14-98)

Lec 9. A folder has been set up for the **Operator Change file**, and a copy of this page has been placed there for reference during routing and processing of the original documents.

c:\dons\wpdocs\forms\operchng

OPERATOR CHANGE WORKSHEET (continued) - Initial each item when completed. Write N/A if item is not applicable.

ENTITY REVIEW

Lec 1. (r649-8-7) **Entity assignments have been reviewed** for all wells listed above. Were entity changes made? (yes/no) ____ If entity assignments were changed, attach copies of Form 6, Entity Action Form.
Entity 11492 "Jonah (Gr) Unit".

N/A 2. Trust Lands, Sovereign Lands, Tax Commission, etc., have been **notified** through normal procedures of entity changes.

BOND VERIFICATION - (FEE WELLS ONLY)

N/A/Lec 1. (r649-3-1) The **NEW** operator of any fee lease well listed above has furnished a proper bond.

__ 2. A **copy of this form** has been placed in the new and former operator's bond files.

__ 3. The **FORMER** operator has requested a release of liability from their bond (yes/no) ____, as of today's date _____. If yes, division response was made to this request by letter dated _____.

LEASE INTEREST OWNER NOTIFICATION OF RESPONSIBILITY

N/A/Lec 1. Copies of documents have been sent on _____ to _____ at Trust Lands for changes involving State leases, in order to remind that agency of their responsibility to review for proper bonding.

NA 2. (r649-2-10) The former operator of any fee lease wells listed above has been contacted and informed by letter dated _____ 19 __, of their responsibility to notify all interest owners of this change.

FILMING

YES 1. All attachments to this form have been **microfilmed**. Today's date: 2.3.98.

FILING

__ 1. **Copies** of all attachments to this form have been filed in each **well file**.

__ 2. The **original of this form**, and the **original attachments** are now being filed in the Operator Change file.

COMMENTS

980114 Bfm/SL Aprv. eff. 1-13-98.

FORM 3160-5
(June 1990)

UNITED STATES
DEPARTMENT OF THE INTERIOR
BUREAU OF LAND MANAGEMENT

FORM APPROVED
Budget Bureau No. 1004-0135
Expires: March 31, 1993

SUNDRY NOTICES AND REPORTS ON WELLS

Do not use this form for proposals to drill or to deepen or reentry a different reservoir.
Use "APPLICATION FOR PERMIT -" for such proposals

SUBMIT IN TRIPLICATE

5. Lease Designation and Serial No.
U-035521-A

6. If Indian, Allottee or Tribe Name
NA

7. If Unit or CA, Agreement Designation
JONAH

1. Type of Well
[X] Oil Well [ ] Gas Well [ ] Other

8. Well Name and No.
MONUMENT FEDERAL 24-12J

9. API Well No.
43-013-31409

2. Name of Operator
INLAND PRODUCTION COMPANY

10. Field and Pool, or Exploratory Area
MONUMENT BUTTE

3. Address and Telephone No.
475 17TH STREET, SUITE 1500, DENVER, COLORADO 80202 (303) 292-0900

11. County or Parish, State
DUCHESNE COUNTY, UTAH

4. Location of Well (Footage, Sec., T., R., m., or Survey Description)
0539 FSL 1777 FWL SE/SW Section 12, T09S R16E

12. CHECK APPROPRIATE BOX(s) TO INDICATE NATURE OF NOTICE, REPORT, OR OTHER DATA

TYPE OF SUBMISSION	TYPE OF ACTION	
[ ] Notice of Intent	[ ] Abandonment	[ ] Change of Plans
[X] Subsequent Report	[ ] Recompletion	[ ] New Construction
[ ] Final Abandonment Notice	[ ] Plugging Back	[ ] Non-Routine Fracturing
	[ ] Casing Repair	[ ] Water Shut-Off
	[ ] Altering Casing	[ ] Conversion to Injection
	[X] Other **Site Security**	[ ] Dispose Water

(Note: Report results of multiple completion on Well Completion or Recompletion Report and Log form.)

13. Describe Proposed or Completed Operations (Clearly state all pertinent details, and give pertinent dates, including estimated date of starting any proposed work. If well is directionally drilled, give subsurface locations and measured and true vertical depths for all markers and zones pertinent to this work.)*

Attached please find the site security diagram for the above referenced well.

RECEIVED
NOV 02 1998
DIV. OF OIL, GAS & MINING

14. I hereby certify that the foregoing is true and correct
Signed Debbie E. Knight Title Manager, Regulatory Compliance Date 10/28/98

(This space for Federal or State office use)

Approved by _____ Title _____ Date _____

Conditions of approval, if any:

CC: UTAH DOGM

Title 18 U.S.C. Section 1001, makes it a crime for any person knowingly and willfully to make to any department or agency of the United States any false, fictitious or fradulent statements or representations as to any matter within its jurisdiction.

Inland Production Company
Site Facility Diagram

Monument Federal 24-12J

SE/SW Sec. 12, T9S, 16E

Duchesne County

Sept. 17, 1998

Emulsion Line	.....
Load Line	———
Water Line	—·—·—·—
Gas Sales	—··—··—·—

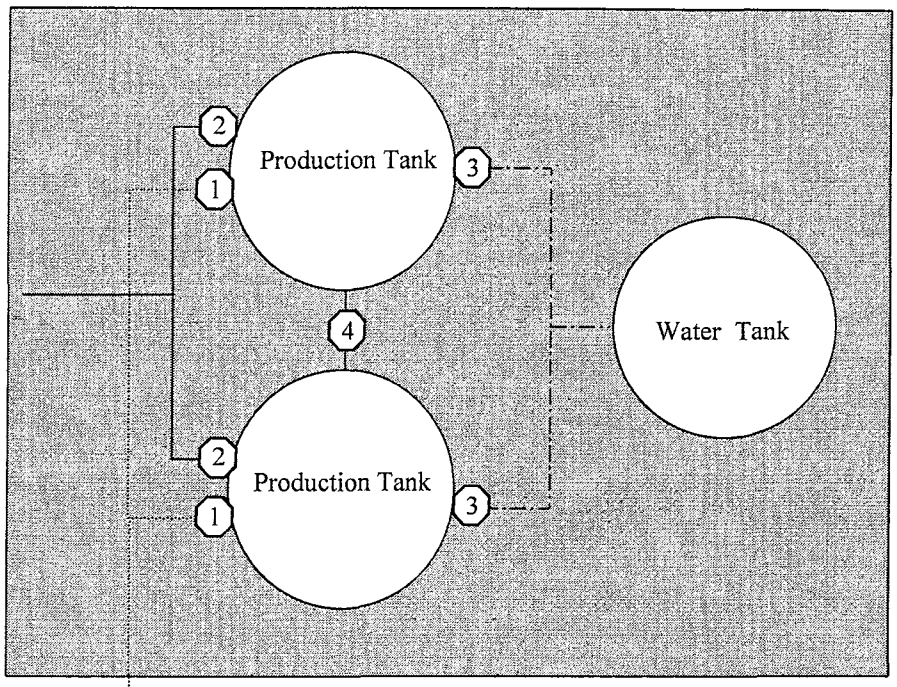

Diked Section

Well Head

Pumping Unit

Site Security Plan is held at the Roosevelt Office, Roosevelt Utah

Production Phase:

1) Valves 1 and 3 sealed closed

2) Valves 2 and 4 sealed open

Sales Phase:

1) Valves 3 & 4 sealed closed

2) Valves 1 open

Draining Phase:

1) Valve 3 open

United States Department of the Interior

BUREAU OF LAND MANAGEMENT
Utah State Office
P.O. Box 45155
Salt Lake City, UT 84145-0155
http://www.blm.gov

TAKE PRIDE IN AMERICA

IN REPLY REFER TO:
3106
(UT-924)

September 16, 2004

Memorandum

To: Vernal Field Office

From: Acting Chief, Branch of Fluid Minerals

Subject: Merger Approval

Attached is an approved copy of the name change recognized by the Utah State Office. We have updated our records to reflect the merger from Inland Production Company into Newfield Production Company on September 2, 2004.

Michael Coulthard
Acting Chief, Branch of
Fluid Minerals

Enclosure
1. State of Texas Certificate of Registration

cc: MMS, Reference Data Branch, James Sykes, PO Box 25165, Denver CO 80225
State of Utah, DOGM, Attn: Earlene Russell, PO Box 145801, SLC UT 84114
Teresa Thompson
Joe Incardine
Connie Seare

Corporations Section
P.O.Box 13697
Austin, Texas 78711-3697

Geoffrey S. Connor
Secretary of State

Office of the Secretary of State

The undersigned, as Secretary of State of Texas, does hereby certify that the attached is a true and correct copy of each document on file in this office as described below:

Newfield Production Company
Filing Number: 41530400

Articles of Amendment September 02, 2004

In testimony whereof, I have hereunto signed my name officially and caused to be impressed hereon the Seal of State at my office in Austin, Texas on September 10, 2004.

Secretary of State

ARTICLES OF AMENDMENT
TO THE
ARTICLES OF INCORPORATION
OF
INLAND PRODUCTION COMPANY

FILED
In the Office of the
Secretary of State of Texas
SEP 02 2004
Corporations Section

Pursuant to the provisions of Article 4.04 of the Texas Business Corporation Act (the "TBCA"), the undersigned corporation adopts the following articles of amendment to the articles of incorporation:

ARTICLE 1 – Name

The name of the corporation is Inland Production Company.

ARTICLE 2 – Amended Name

The following amendment to the Articles of Incorporation was approved by the Board of Directors and adopted by the shareholders of the corporation on August 27, 2004.

The amendment alters or changes Article One of the Articles of Incorporation to change the name of the corporation so that, as amended, Article One shall read in its entirety as follows:

"ARTICLE ONE – The name of the corporation is Newfield Production Company."

ARTICLE 3 – Effective Date of Filing

This document will become effective upon filing.

The holder of all of the shares outstanding and entitled to vote on said amendment has signed a consent in writing pursuant to Article 9.10 of the TBCA, adopting said amendment, and any written notice required has been given.

IN WITNESS WHEREOF, the undersigned corporation has executed these Articles of Amendment as of the 1st day of September, 2004.

INLAND RESOURCES INC.

By: Susan G. Riggs
Susan G. Riggs, Treasurer

UTSL-

071572A
065914

UTU-

02458
03563
03563A
04493
05843
07978
09803
017439B
017985
017991
017992
018073
019222
020252
020252A
020254
020255
020309D
022684A
027345
034217A
035521
035521A
038797
058149
063597A
075174
096547
096550

10760
11385
13905
15392
15855
16535
16539
16544
17036
17424
18048
18399
19267
26026A
30096
30103
31260
33992
34173
34346
36442
36846
38411
38428
38429
38431
39713
39714
40026
40652
40894
41377
44210
44426
44430
45431
47171
49092
49430
49950
50376
50385
50376
50750
51081
52013
52018
58546
61052
62848
63073B
63073D
63073E
63073O
64917
64379
64380
64381
64805
64806
64917
65207
65210
65635
65967
65969
65970
66184
66185
66191
67168
67170
67208
67549
67586
67845
68105
68548
68618
69060
69061
69744
70821
72103
72104
72105
72106
72107
72108
73086
73087
73807
73088
73089
73520A
74108
74805
74806
74807
74808
74389
74390
74391
74392
74393
74398
74399
74400
74404
74405
74406
74411
74805
74806
74826
74827
74835
74868
74869
74870
74872
74970
75036
75037
75038
75039
75075
75078
75089
75090
75234
75238
76239
76240
76241
76560
76561
76787
76808
76813
76954
76956
77233
77234
77235
77337
77338
77339
77357
77359
77365
77369
77370
77546
77553
77554
78022
79013
79014
79015
79016
79017
79831
79832
79833
79831
79834
80450
80915
81000

63073X
63098A
68528A
72086A
72613A
73520X
74477X
75023X
76189X
76331X
76788X
77098X
77107X
77236X
77376X
78560X
79485X
79641X
80207X
81307X

Division of Oil, Gas and Mining

OPERATOR CHANGE WORKSHEET

ROUTING
1. GLH
2. CDW
3. FILE

Change of Operator (Well Sold) | Designation of Agent/Operator

X Operator Name Change | **Merger**

The operator of the well(s) listed below has changed, effective: **9/1/2004**

FROM: (Old Operator):	**TO:** (New Operator):
N5160-Inland Production Company	N2695-Newfield Production Company
Route 3 Box 3630	Route 3 Box 3630
Myton, UT 84052	Myton, UT 84052
Phone: 1-(435) 646-3721	Phone: 1-(435) 646-3721

CA No. **Unit:** **JONAH (GREEN RIVER)**

WELL(S)

NAME	SEC	TWN	RNG	API NO	ENTITY NO	LEASE TYPE	WELL TYPE	WELL STATUS
MONUMENT FED 31-1J	01	090S	160E	4301331413	11492	Federal	OW	P
MONUMENT FED 32-1J	01	090S	160E	4301331414	11492	Federal	OW	P
MON FED 44-1J	01	090S	160E	4301331415	11492	Federal	WI	A
MON FED 34-10J	10	090S	160E	4301331416	11492	Federal	WI	A
MON FED 12-11J	11	090S	160E	4301331417	11492	Federal	WI	A
MONUMENT FED 33-11J	11	090S	160E	4301331451	11492	Federal	OW	P
MONUMENT FED 24-12J	12	090S	160E	4301331409	11492	Federal	OW	P
MON FED 12-12J	12	090S	160E	4301331410	11492	Federal	WI	A
MON FED 14-12J	12	090S	160E	4301331411	11492	Federal	WI	A
MON FED 32-12J	12	090S	160E	4301331419	11492	Federal	WI	A
MON FED 42-12J	12	090S	160E	4301331486	11492	Federal	WI	A
MONUMENT FED 41-12J	12	090S	160E	4301331487	11492	Federal	OW	P
MON FED 41-14J	14	090S	160E	4301331408	11492	Federal	WI	A
MON FED 21-14J	14	090S	160E	4301331421	11492	Federal	WI	A
MONUMENT FED 21-15J	15	090S	160E	4301331422	11492	Federal	NA	PA
MON FED 31-7J	07	090S	170E	4301331405	11492	Federal	WI	A
MON FED 11-7J	07	090S	170E	4301331492	11492	Federal	WI	A
MONUMENT FED 12-7J	07	090S	170E	4301331493	11492	Federal	OW	P
JONAH 6-7	07	090S	170E	4301331987	11492	Federal	WI	A
JONAH 7-7	07	090S	170E	4301331988	11492	Federal	OW	P

OPERATOR CHANGES DOCUMENTATION

Enter date after each listed item is completed

1. (R649-8-10) Sundry or legal documentation was received from the **FORMER** operator on: 9/15/2004
2. (R649-8-10) Sundry or legal documentation was received from the **NEW** operator on: 9/15/2004

3. The new company was checked on the **Department of Commerce, Division of Corporations Database on:** 2/23/2005
4. Is the new operator registered in the State of Utah: YES Business Number: 755627-0143
5. If **NO**, the operator was contacted contacted on:

6a. (R649-9-2)Waste Management Plan has been received on: IN PLACE

6b. Inspections of LA PA state/fee well sites complete on: waived

7. **Federal and Indian Lease Wells:** The BLM and or the BIA has approved the merger, name change, or operator change for all wells listed on Federal or Indian leases on: BLM BIA

8. **Federal and Indian Units:**
The BLM or BIA has approved the successor of unit operator for wells listed on: n/a

9. **Federal and Indian Communization Agreements ("CA"):**
The BLM or BIA has approved the operator for all wells listed within a CA on: na/

10. **Underground Injection Control ("UIC")** The Division has approved UIC Form 5, **Transfer of Authority to Inject,** for the enhanced/secondary recovery unit/project for the water disposal well(s) listed on: 2/23/2005

DATA ENTRY:

1. Changes entered in the **Oil and Gas Database on:** 2/28/2005
2. Changes have been entered on the **Monthly Operator Change Spread Sheet on:** 2/28/2005
3. Bond information entered in RBDMS on: 2/28/2005
4. Fee/State wells attached to bond in RBDMS on: 2/28/2005
5. Injection Projects to new operator in RBDMS on: 2/28/2005
6. Receipt of Acceptance of Drilling Procedures for APD/New on: waived

FEDERAL WELL(S) BOND VERIFICATION:

1. Federal well(s) covered by Bond Number: UT 0056

INDIAN WELL(S) BOND VERIFICATION:

1. Indian well(s) covered by Bond Number: 61BSBDH2912

FEE & STATE WELL(S) BOND VERIFICATION:

1. (R649-3-1) The **NEW** operator of any fee well(s) listed covered by Bond Number 61BSBDH2919

2. The **FORMER** operator has requested a release of liability from their bond on: n/a*
The Division sent response by letter on: n/a

LEASE INTEREST OWNER NOTIFICATION:

3. (R649-2-10) The **FORMER** operator of the fee wells has been contacted and informed by a letter from the Division of their responsibility to notify all interest owners of this change on: n/a

COMMENTS:

*Bond rider changed operator name from Inland Production Company to Newfield Production Company - **received 2/23/05**

STATE OF UTAH
DEPARTMENT OF NATURAL RESOURCES
DIVISION OF OIL, GAS, AND MINING

FORM 9

SUNDRY NOTICES AND REPORTS ON WELLS

Do not use this form for proposals to drill new wells, significantly deepen existing wells below current bottom-hole depth, reenter plugged wells, or to drill horizontal laterals. Use APPLICATION FOR PERMIT TO DRILL form for such proposals.

5.LEASE DESIGNATION AND SERIAL NUMBER: U-035521-A

6. IF INDIAN, ALLOTTEE OR TRIBE NAME:

7.UNIT or CA AGREEMENT NAME: GMBU (GRRV)

1. TYPE OF WELL Oil Well

8. WELL NAME and NUMBER: MONUMENT FED 24-12J

2. NAME OF OPERATOR: NEWFIELD PRODUCTION COMPANY

9. API NUMBER: 43013314090000

3. ADDRESS OF OPERATOR: Rt 3 Box 3630 , Myton, UT, 84052

PHONE NUMBER: 435 646-4825 Ext

9. FIELD and POOL or WILDCAT: MONUMENT BUTTE

4. LOCATION OF WELL
FOOTAGES AT SURFACE: 0539 FSL 1777 FWL
QTR/QTR, SECTION, TOWNSHIP, RANGE, MERIDIAN: Qtr/Qtr: SESW Section: 12 Township: 09.0S Range: 16.0E Meridian: S

COUNTY: DUCHESNE

STATE: UTAH

11. CHECK APPROPRIATE BOXES TO INDICATE NATURE OF NOTICE, REPORT, OR OTHER DATA

TYPE OF SUBMISSION	TYPE OF ACTION		
☐ NOTICE OF INTENT Approximate date work will start:	☐ ACIDIZE	☐ ALTER CASING	☐ CASING REPAIR
☑ SUBSEQUENT REPORT Date of Work Completion: 9/9/2013	☐ CHANGE TO PREVIOUS PLANS	☐ CHANGE TUBING	☐ CHANGE WELL NAME
☐ SPUD REPORT Date of Spud:	☑ CHANGE WELL STATUS	☐ COMMINGLE PRODUCING FORMATIONS	☑ CONVERT WELL TYPE
☐ DRILLING REPORT Report Date:	☐ DEEPEN	☐ FRACTURE TREAT	☐ NEW CONSTRUCTION
	☐ OPERATOR CHANGE	☐ PLUG AND ABANDON	☐ PLUG BACK
	☐ PRODUCTION START OR RESUME	☐ RECLAMATION OF WELL SITE	☐ RECOMPLETE DIFFERENT FORMATION
	☐ REPERFORATE CURRENT FORMATION	☐ SIDETRACK TO REPAIR WELL	☐ TEMPORARY ABANDON
	☐ TUBING REPAIR	☐ VENT OR FLARE	☐ WATER DISPOSAL
	☐ WATER SHUTOFF	☐ SI TA STATUS EXTENSION	☐ APD EXTENSION
	☐ WILDCAT WELL DETERMINATION	☑ OTHER	OTHER: New Perforations

12. DESCRIBE PROPOSED OR COMPLETED OPERATIONS. Clearly show all pertinent details including dates, depths, volumes, etc.

The subject well has been converted from a producing oil well to an injection well on 09/05/2013. New intervals were perforated, A1 sands - 5022-5048' 3 JSPF & PB10 sands - 4320-4330' 3 JSPF . On 09/09/2013 Chris Jensen with the State of Utah DOGM was contacted concerning the initial MIT on the above listed well. On 09/09/2013 the casing was pressured up to 1110 psig and charted for 30 minutes with no pressure loss. The well was not injecting during the test. The tubing pressure was 0 psig during the test. There was a State representative available to witness the test - Chris Jensen.

Accepted by the Utah Division of Oil, Gas and Mining
FOR RECORD ONLY
September 16, 2013

NAME (PLEASE PRINT)	PHONE NUMBER	TITLE
Lucy Chavez-Naupoto	435 646-4874	Water Services Technician
SIGNATURE N/A		**DATE** 9/13/2013

Mechanical Integrity Test
Casing or Annulus Pressure Test

Newfield Production Company
Rt. 3 Box 3630
Myton, UT 84052
435-646-3721

Witness: C Jensen **Date** 9/9/13 **Time** 9:00 (am) pm

Test Conducted by: EVERETT UNRUH

Others Present:

Well: BALCRON MON. FEDERAL 24-12S-9-16 **Field:** Monument Butte

Well Location: SESW Sec 12 T9S R16E **API No:** 43-013-31409
Duchesne County, UT

Time	Casing Pressure
0 min	1110 psig
5	1110 psig
10	1110 psig
15	1110 psig
20	1110 psig
25	1110 psig
30 min	1110 psig
35	psig
40	psig
45	psig
50	psig
55	psig
60 min	psig

Tubing pressure: 0 psig

Result: (Pass) Fail

Signature of Witness: C Jensen

Signature of Person Conducting Test: Everett Unruh

Sundry Number: 42580 API Well Number: 43013314090000

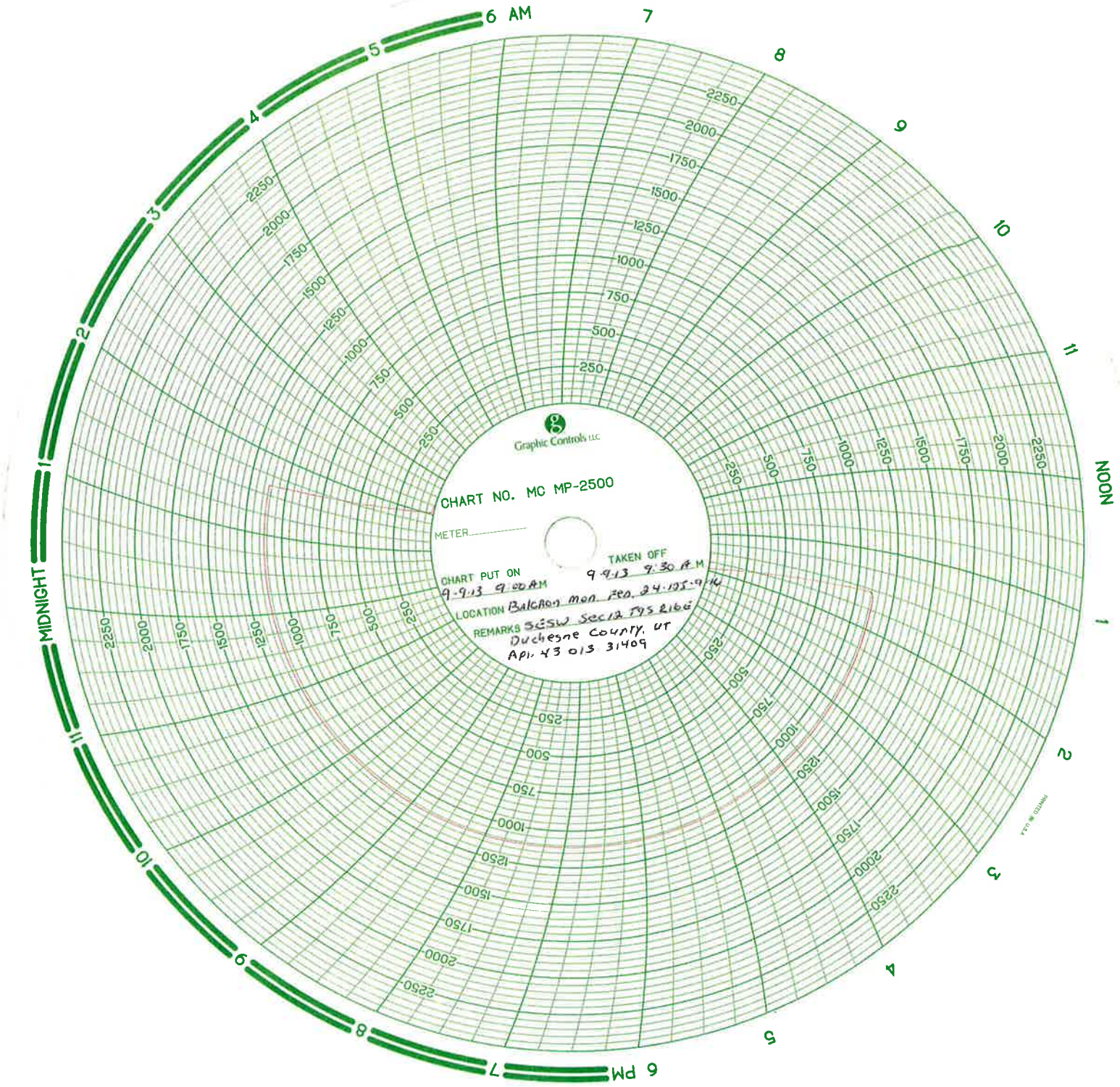

Daily Activity Report

Format For Sundry

MON 24-12J-9-16

7/1/2013 To 11/30/2013

8/23/2013 Day: 1 **Conversion**

WC#2 on 8/23/2013 - MIRUSU. TOOH w/ tbg. Perferate new zones. - - HelD safety meeting & dicussed location hazards & RU proceedures. MIRUSU. - PU 10 jts tbg to tag PBTD @ 5532'. TOOH w/ tbg. Found hole in tbg @ 170. LD 169-170-171. - RU Hot oiler. Open well w/ 0 psi on casing. Pump 30 bbls well started circulate. Pump 120 bbls down casing @ 225*. RU BOP's. Release TA. - HelD safety meeting & dicussed location hazards & RU proceedures. MIRUSU. - - RU Perforators LLC WLT. PU gauge rig. RIH to 5532'. Fl Lvl was 715'. RU 3-1/8" perf guns & perferate A1 sd @ 5046-48', 22-26', PB10 sds @4327-30', 20-22' w/ 3 spf for total of 11 shots total. RD WLT. SIFN. - PU 10 jts tbg to tag PBTD @ 5532'. TOOH w/ tbg. Found hole in tbg @ 170. LD 169-170-171. - RU Hot oiler. Open well w/ 0 psi on casing. Pump 30 bbls well started circulate. Pump 120 bbls down casing @ 225*. RU BOP's. Release TA. - HelD safety meeting & dicussed location hazards & RU proceedures. MIRUSU. - - RU Perforators LLC WLT. PU gauge rig. RIH to 5532'. Fl Lvl was 715'. RU 3-1/8" perf guns & perferate A1 sd @ 5046-48', 22-26', PB10 sds @4327-30', 20-22' w/ 3 spf for total of 11 shots total. RD WLT. SIFN. - PU 10 jts tbg to tag PBTD @ 5532'. TOOH w/ tbg. Found hole in tbg @ 170. LD 169-170-171. - RU Hot oiler. Open well w/ 0 psi on casing. Pump 30 bbls well started circulate. Pump 120 bbls down casing @ 225*. RU BOP's. Release TA. - RU Perforators LLC WLT. PU gauge rig. RIH to 5532'. Fl Lvl was 715'. RU 3-1/8" perf guns & perferate A1 sd @ 5046-48', 22-26', PB10 sds @4327-30', 20-22' w/ 3 spf for total of 11 shots total. RD WLT. SIFN. **Finalized**
Daily Cost: $0
Cumulative Cost: $19,942

8/27/2013 Day: 3 **Conversion**

WC#2 on 8/27/2013 - Frac 1st stg & went to move tools & tbg was parted, Found 2 split collars, RIH w/ Graco overshot & fish PKR, LD 2 7/8" N-80 work string - CONTINUE PU TBG, SET RBP 10' OUT ON JT-139 @ 4388', TOOH 3 JTS TBG SET PKR 3'OUT ON JT-136 @ 4288', FILLED TBG W/ 7 BBLS PRESSURED UP TO 4500 PSI, COULD NOT GET PERFS TO BREAK, BLEED OF RATE OF 500 PSI PER 10 MIN, BLEED OF TO 1500 PSI SURGED IT TO 4500 PSI 4 TIMES, NO CHANGE - CONTINUE PU TBG, SET RBP 10' OUT ON JT-139 @ 4388', TOOH 3 JTS TBG SET PKR 3'OUT ON JT-136 @ 4288', FILLED TBG W/ 7 BBLS PRESSURED UP TO 4500 PSI, COULD NOT GET PERFS TO BREAK, BLEED OF RATE OF 500 PSI PER 10 MIN, BLEED OF TO 1500 PSI SURGED IT TO 4500 PSI 4 TIMES, NO CHANGE - BLEW DOWN WELL, PU & RIH W/ WEATHERFORD RBP, RETRIEVING HEAD, 1-2 3/8" PUP SUB, WEATHERFORD 5 1/2" HD PKR, TALLIED AND PU 129-JTS OF 2 7/8" N-80 TBG, SET PKR @ 4070' & PT CSG TO 2000 PSI, HELD FOR 15 MIN, GOOD TEST - BLEW DOWN WELL, PU & RIH W/ WEATHERFORD RBP, RETRIEVING HEAD, 1-2 3/8" PUP SUB, WEATHERFORD 5 1/2" HD PKR, TALLIED AND PU 129-JTS OF 2 7/8" N-80 TBG, SET PKR @ 4070' & PT CSG TO 2000 PSI, HELD FOR 15 MIN, GOOD TEST - JSA SAFETY MEETING - JSA SAFETY MEETING - CREW TRAVEL - CREW TRAVEL - Crew Travel - Crew Travel - TOOH Singling down 161-jts 2 7/8" N-80 tbg on trailer, LD PKR & BHA, SWI - TOOH Singling down 161-jts 2 7/8" N-80 tbg on trailer, LD PKR & BHA, SWI - Strap fishing tools, MU & RIH w/ 4 5/8" overshot dressed w/ 3 21/32" spiral grapple, 2' x 2 7/8" tbg sub, 155-jts 2 7/8" N-80 tbg, Latch on to fish & Release PKR - Strap fishing tools, MU & RIH w/ 4 5/8" overshot dressed w/ 3 21/32" spiral grapple, 2' x 2 7/8" tbg sub, 155-jts 2 7/8" N-80 tbg, Latch on to fish & Release PKR - Wait on Graco fishing tools. - Wait on Graco fishing tools. - TOOH w/ 2 7/8" N-tbg, Found split collar in string & come out of hole w/ 2 7/8" pin looking down, Most likley split collar in hole. - TOOH w/ 2 7/8" N-tbg, Found split collar in string & come out of hole w/ 2 7/8" pin looking down, Most likley split collar in hole. - RD HES

frac equip, Open well to rig tank on 20 choke, Flowback well till dead & recover 110 bbls, Release PKR & reverse tbg clean, Went to break out frac valve & found that tbg was parted, LD frac valve. - RD HES frac equip, Open well to rig tank on 20 choke, Flowback well till dead & recover 110 bbls, Release PKR & reverse tbg clean, Went to break out frac valve & found that tbg was parted, LD frac valve. - (Stg #1) (Delta 140)(Fresh Water) Open tbg w/ 0 psi, 0 bbls to fill tbg, Break down A-Sand @ 2269 psi w/ 2 bbls @ 4.6 bpm, Pump 6 bbls 15% HCL, Pump 97.3 bbls to get to rate & find x-link, Pumped 40.8 bbls 0-3# sand (Ramped), Pumped 77.7 bbls 3# sand (Hold), Pumped 24.4 bbls 4# sand (Hold), Pumped 30 bbls slick water flush, ISIP 1783 psi, F.G. .79, Max Press 4185 psi, Avg press 3400 psi, Max rate 15.1 bpm, Avg rate 14.5 bpm, Pumped ttl of 15,000# sand in formation, Pumped ttl of 276 bbls. - (Stg #1) (Delta 140)(Fresh Water) Open tbg w/ 0 psi, 0 bbls to fill tbg, Break down A-Sand @ 2269 psi w/ 2 bbls @ 4.6 bpm, Pump 6 bbls 15% HCL, Pump 97.3 bbls to get to rate & find x-link, Pumped 40.8 bbls 0-3# sand (Ramped), Pumped 77.7 bbls 3# sand (Hold), Pumped 24.4 bbls 4# sand (Hold), Pumped 30 bbls slick water flush, ISIP 1783 psi, F.G. .79, Max Press 4185 psi, Avg press 3400 psi, Max rate 15.1 bpm, Avg rate 14.5 bpm, Pumped ttl of 15,000# sand in formation, Pumped ttl of 276 bbls. - RU HES frac equip, Test line to 6,000 psi. - RU HES frac equip, Test line to 6,000 psi. - CREW TRAVEL - CREW TRAVEL - RELEASED PKR, TIH 3 -JTS TBG RETRIEVED RBP, TIH 22- JTS TBG, SET RBP 10' OUT ON JT -161 @ 5080', TOOH 4- JTS TBG, PU FRAC VAVLE W/ 6' PUP SUB ON BOTTOM, SIWFN - RELEASED PKR, TIH 3 -JTS TBG RETRIEVED RBP, TIH 22- JTS TBG, SET RBP 10' OUT ON JT -161 @ 5080', TOOH 4- JTS TBG, PU FRAC VAVLE W/ 6' PUP SUB ON BOTTOM, SIWFN - TOOH W/ 22- JTS TBG SET RBP 10' OUT ON JT 139 @ 4388', TOOH 2- JTS TBG, PUMP 175 GAL OF ACID DISPLACED W/ 20 BBLS OF FRESH WATER, TOOH 1- JT TBG SET PKR 3' OUT ON JT -136 @ 4288' , PRESSURED UP TO 2800 PSI & FORMATION BROKE, INJECTION RATE .25 BBLS/MIN @1400PSI - TOOH W/ 22- JTS TBG SET RBP 10' OUT ON JT 139 @ 4388', TOOH 2- JTS TBG, PUMP 175 GAL OF ACID DISPLACED W/ 20 BBLS OF FRESH WATER, TOOH 1- JT TBG SET PKR 3' OUT ON JT -136 @ 4288' , PRESSURED UP TO 2800 PSI & FORMATION BROKE, INJECTION RATE .25 BBLS/MIN @1400PSI - RELEASED PKR, TIH 1-JT, RU WESTERCEMICAL ACID PUPMER, PUMPED 125 GAL OF ACID DISPLACED W/ 25 BBLS OF FRESH WATER, TOOH 1-JT TBG SET PKR PRESSURED UP TO 3600 PSI & FORMATION BROKE, INJECTION RATE OF .25 BBLS @1200 PSI, TIH 4 -JTS TBG RETRIEVED RBP - RELEASED PKR, TIH 1-JT, RU WESTERCEMICAL ACID PUPMER, PUMPED 125 GAL OF ACID DISPLACED W/ 25 BBLS OF FRESH WATER, TOOH 1-JT TBG SET PKR PRESSURED UP TO 3600 PSI & FORMATION BROKE, INJECTION RATE OF .25 BBLS @1200 PSI, TIH 4 -JTS TBG RETRIEVED RBP - PRESSURED UP TO 4000 PSI, PERFS WOULD NOT BREAK, BLEED OFF RATE OF 200 PSI PER 10 MIN, BLEED OFF TO 1500 PSI SURGED TO 4000 PSI 4 TIMES, NO CHANGE - PRESSURED UP TO 4000 PSI, PERFS WOULD NOT BREAK, BLEED OFF RATE OF 200 PSI PER 10 MIN, BLEED OFF TO 1500 PSI SURGED TO 4000 PSI 4 TIMES, NO CHANGE - TIH W/ 3- JTS, RETRIEVED RBP, PU 23- JTS OF TBG SET PLUG 10' OUT ON JT-161 @ 5080', TOOH W/ 4- JTS TBG SET PKR 3' OUT ON JT-157 @ 4948 - TIH W/ 3- JTS, RETRIEVED RBP, PU 23- JTS OF TBG SET PLUG 10' OUT ON JT-161 @ 5080', TOOH W/ 4- JTS TBG SET PKR 3' OUT ON JT-157 @ 4948 - CONTINUE PU TBG, SET RBP 10' OUT ON JT-139 @ 4388', TOOH 3 JTS TBG SET PKR 3'OUT ON JT-136 @ 4288', FILLED TBG W/ 7 BBLS PRESSURED UP TO 4500 PSI, COULD NOT GET PERFS TO BREAK, BLEED OF RATE OF 500 PSI PER 10 MIN, BLEED OF TO 1500 PSI SURGED IT TO 4500 PSI 4 TIMES, NO CHANGE - CONTINUE PU TBG, SET RBP 10' OUT ON JT-139 @ 4388', TOOH 3 JTS TBG SET PKR 3'OUT ON JT-136 @ 4288', FILLED TBG W/ 7 BBLS PRESSURED UP TO 4500 PSI, COULD NOT GET PERFS TO BREAK, BLEED OF RATE OF 500 PSI PER 10 MIN, BLEED OF TO 1500 PSI SURGED IT TO 4500 PSI 4 TIMES, NO CHANGE - BLEW DOWN WELL, PU & RIH W/ WEATHERFORD RBP, RETRIEVING HEAD, 1-2 3/8" PUP SUB, WEATHERFORD 5 1/2" HD PKR, TALLIED AND PU 129-JTS OF 2 7/8" N-80 TBG, SET PKR @ 4070' & PT CSG TO 2000 PSI, HELD FOR 15 MIN, GOOD TEST - BLEW DOWN WELL, PU & RIH W/ WEATHERFORD RBP, RETRIEVING HEAD, 1-2 3/8" PUP SUB, WEATHERFORD 5 1/2" HD PKR, TALLIED AND PU 129-JTS OF 2 7/8" N-80 TBG, SET PKR @ 4070' & PT CSG TO 2000 PSI, HELD FOR 15 MIN, GOOD TEST - JSA SAFETY MEETING - JSA SAFETY MEETING - CREW TRAVEL - CREW TRAVEL - Crew Travel - Crew Travel - TOOH Singling down 161-jts 2 7/8" N-80 tbg on trailer, LD PKR & BHA, SWI - TOOH Singling down 161-jts 2 7/8" N-80 tbg on trailer, LD PKR & BHA, SWI - Strap fishing tools, MU

8/29/2013 Day: 4 **Conversion**

WC#2 on 8/29/2013 - Fish collar pieces for wellhead & csg, PU pkr & retrieving head, PU new L-80 work string. - CREW TRAVEL - RIH W/ RETRIEVING HEAD, 2 3/8" PUP SUB, 1-5 1/2" HD PKR, PU 149 JTS TBG SIWFN - RIH W/ GRACO MAGNET, PU 20- JTS OF 2 7/8" TBG & STACKED OUT ON COLLAR PIECES, POOH 20- JTS RETRIEVED & 3 PEICES OF THE COLLAR (APPROX 1/3 COLLAR LEFT IN HOLE), TIH 20- JTS & PU 10 MORE JTS OF TBG OFF TRAILER, TOOH 30-JTS TBG, RECOVERED REMAINING PIECES OF COLLAR. - ND BOPS & FOUND HALF OF A 2 7/8" TBG COLLAR IN WELL HEAD, CHECK BOP CAVITY FOR REMAINING COLLAR PIECES, NONE TO BE FOUND - PU RETRIEVING HEAD, 2 3/8" PUP SUB, WEATHERFORD 5 1/2" HD PKR, 1- JT 2 7/8" N-80 TBG, WENT TO START IN HOLE W/ TOOLS & COULD NOT GET THRU WELLHEAD - JSA SAFTEY MEETING - CREW TRAVEL - CREW TRAVEL - RIH W/ RETRIEVING HEAD, 2 3/8" PUP SUB, 1-5 1/2" HD PKR, PU 149 JTS TBG SIWFN - RIH W/ GRACO MAGNET, PU 20- JTS OF 2 7/8" TBG & STACKED OUT ON COLLAR PIECES, POOH 20- JTS RETRIEVED & 3 PEICES OF THE COLLAR(APPROX 1/3 COLLAR LEFT IN HOLE), TIH 20- JTS & PU 10 MORE JTS OF TBG OFF TRAILER, TOOH 30-JTS TBG, RECOVERED REMAINING PIECES OF COLLAR. - ND BOPS & FOUND HALF OF A 2 7/8" TBG COLLAR IN WELL HEAD, CHECK BOP CAVITY FOR REMAINING COLLAR PIECES, NONE TO BE FOUND - PU RETRIEVING HEAD, 2 3/8" PUP SUB, WEATHERFORD 5 1/2" HD PKR, 1- JT 2 7/8" N-80 TBG, WENT TO START IN HOLE W/ TOOLS & COULD NOT GET THRU WELLHEAD - JSA SAFTEY MEETING - CREW TRAVEL - CREW TRAVEL - RIH W/ RETRIEVING HEAD, 2 3/8" PUP SUB, 1-5 1/2" HD PKR, PU 149 JTS TBG SIWFN - RIH W/ GRACO MAGNET, PU 20- JTS OF 2 7/8" TBG & STACKED OUT ON COLLAR PIECES, POOH 20- JTS RETRIEVED & 3 PEICES OF THE COLLAR (APPROX 1/3 COLLAR LEFT IN HOLE), TIH 20- JTS & PU 10 MORE JTS OF TBG OFF TRAILER, TOOH 30-JTS TBG, RECOVERED REMAINING PIECES OF COLLAR. - ND BOPS & FOUND HALF OF A 2 7/8" TBG COLLAR IN WELL HEAD, CHECK BOP CAVITY FOR REMAINING COLLAR PIECES, NONE TO BE FOUND - PU RETRIEVING HEAD, 2 3/8" PUP SUB, WEATHERFORD 5 1/2" HD PKR, 1- JT 2 7/8" N-80 TBG, WENT TO START IN HOLE W/ TOOLS & COULD NOT GET THRU WELLHEAD - JSA SAFTEY MEETING - CREW TRAVEL **Finalized**
Daily Cost: $0
Cumulative Cost: $47,982

8/30/2013 Day: 5 **Conversion**

WC#2 on 8/30/2013 - Continue PU L-80 tbg, Circulate sand off RBP, Release plug & move tools to 2nd stg, Test tools, Set tools for stg #2 - JSA SAFTEY MEETING - CREW TRAVEL - CREW TRAVEL - TOOH 4 JTS, PU FRAC STRING VALVE, SIWFN, CLEAN UP LOCATION - TOOH W/ TOOLS TO 2ND STAGE OF FRAC, SET PKR BELOW PERFS & PULLED 1- JT, SET PKR & PRESS TEST TO 2K PSI GOOD TEST - PU 10 JTS TBG, MU WASH STAND & CIRCULATE ONTO PLUG (30'), CIRCULATED 45 MIN @ 3 BBLS MIN & RELEASED PLUG - JSA SAFTEY MEETING - CREW TRAVEL - CREW TRAVEL - TOOH 4 JTS, PU FRAC STRING VALVE, SIWFN, CLEAN UP LOCATION - TOOH W/ TOOLS TO 2ND STAGE OF FRAC, SET PKR BELOW PERFS & PULLED 1- JT, SET PKR & PRESS TEST TO 2K PSI GOOD TEST - PU 10 JTS TBG, MU WASH STAND & CIRCULATE ONTO PLUG (30'), CIRCULATED 45 MIN @ 3 BBLS MIN & RELEASED PLUG - JSA SAFTEY MEETING - CREW TRAVEL - CREW TRAVEL - TOOH 4 JTS, PU FRAC STRING VALVE, SIWFN, CLEAN UP LOCATION - TOOH W/ TOOLS TO 2ND STAGE OF FRAC, SET PKR BELOW PERFS & PULLED 1- JT, SET PKR & PRESS TEST TO 2K PSI GOOD TEST - PU 10 JTS TBG, MU WASH STAND & CIRCULATE ONTO PLUG (30'), CIRCULATED 45 MIN @ 3 BBLS MIN & RELEASED PLUG
Daily Cost: $0
Cumulative Cost: $60,515

(Ramped), Pumped 71 bbls 3# sand (Hold), Pumped 24 bbls slick water flush, ISIP 1987 psi, F.G. .89, Max Press 4137 psi, Avg press 3143 psi, Max rate 15 bpm, Avg rate 14.2 bpm, Pumped ttl of 11,194# sand in formation, Pumped ttl of 203 bbls. (Ran short on sand before 4# sand stg) - RU HES frac equipment, Test lines to 6,000 psi. - RU HES frac equipment, Test lines to 6,000 psi. - CREW TRAVEL - CREW TRAVEL - WAIT ON HALLIBURTON FRAC CREW (FRAC CREW HAD ISSUES ON DIFFERENT WELL) - WAIT ON HALLIBURTON FRAC CREW (FRAC CREW HAD ISSUES ON DIFFERENT WELL) - SAFETY MEETING & JSA - SAFETY MEETING & JSA - CREW TRAVEL - Crew Travel **Finalized**
Daily Cost: $0
Cumulative Cost: $71,530

9/4/2013 Day: 8 **Conversion**

WC#2 on 9/4/2013 - LD 2 7/8" work String, TIH w/ production tbg, TOOH w/ tbg breaking & doping - CREW TRAVEL - CREW TRAVEL - CREW TRAVEL - FLUSHED TBG W/ 40 BBLS @ 250 DEG, DROPPED STANDING VALVE CHASED W/ 35 BBLS NO PRESSURE, CHASED TO BOTTOM W/ SANDLINE, POOH W/ SANDLINE, PUMPED 1 BBL PT TO 3K PSI GOOD TEST - TIH W/ 171-JTS 2 7/8" J-55 PRODUCTION STRING - TIH 16-JTS OUT OF DERRICK, LD 137-JTS WORK STRING ON FLOAT - JSA SAFETY MEETING - TOOH W/ 18-JTS TBG, CHANGED 2 COLLARS & BREAKING AND DOPING ALL CONNECTIONS, SWFN - FLUSHED TBG W/ 40 BBLS @ 250 DEG, DROPPED STANDING VALVE CHASED W/ 35 BBLS NO PRESSURE, CHASED TO BOTTOM W/ SANDLINE, POOH W/ SANDLINE, PUMPED 1 BBL PT TO 3K PSI GOOD TEST - TIH W/ 171-JTS 2 7/8" J-55 PRODUCTION STRING - TIH 16-JTS OUT OF DERRICK, LD 137-JTS WORK STRING ON FLOAT - JSA SAFETY MEETING - CREW TRAVEL - CREW TRAVEL - TOOH W/ 18-JTS TBG, CHANGED 2 COLLARS & BREAKING AND DOPING ALL CONNECTIONS, SWFN - FLUSHED TBG W/ 40 BBLS @ 250 DEG, DROPPED STANDING VALVE CHASED W/ 35 BBLS NO PRESSURE, CHASED TO BOTTOM W/ SANDLINE, POOH W/ SANDLINE, PUMPED 1 BBL PT TO 3K PSI GOOD TEST - TIH W/ 171-JTS 2 7/8" J-55 PRODUCTION STRING - TIH 16-JTS OUT OF DERRICK, LD 137-JTS WORK STRING ON FLOAT - JSA SAFETY MEETING - CREW TRAVEL - TOOH W/ 18-JTS TBG, CHANGED 2 COLLARS & BREAKING AND DOPING ALL CONNECTIONS, SWFN
Daily Cost: $0
Cumulative Cost: $155,324

9/5/2013 Day: 9 **Conversion**

WC#2 on 9/5/2013 - Continue TOOH breaking & doping tbg (Change out 9 collars), LD Extra tbg, TIH w/ injection PKR & tbg, Drop standing valve, Test tbg over night. - CREW TRAVEL - JSA SAFETY MEETING - LD EXTRA 43-JTS TBG ON TBG FLOAT - MU & TIH W/ INJECTION STRING AS FOLLOWS: 2 3/8" RE-ENTRY GUIDE, 2 3/8 1.87 " XN" NIPPLE, 2' X 2 3/8" SUB, X-OVER 2 3/8" TO 2 7/8" SWEDGE, 5 1/2" X 2 7/8" WEATHERFORD AS1X PACKER, 2 7/8" T-2 ON/OFF TOOL, 2 7/8" SEAT NIPPLE, 130-JTS OF 2 7/8" J-55 TBG - PUMPED 10 BBLS & DROPPED STANDING VALVE, CHASED W/ 35 BBLS NO PRESSURE, CHASED TO BOTTOM W/ SANDLINE TAGGED STANDING VALVE IN SN, POOH W/ SANDLINE, RU ISOLATION T & PRESS TEST TBG TO 3K PSI, SIWFN - CREW TRAVEL - CREW TRAVEL - JSA SAFETY MEETING - TOOH 112-JTS TBG BREAKING & DOPING, CHANGE OUT 9 TBG COLLARS - LD EXTRA 43-JTS TBG ON TBG FLOAT - MU & TIH W/ INJECTION STRING AS FOLLOWS: 2 3/8" RE-ENTRY GUIDE, 2 3/8 1.87 " XN" NIPPLE, 2' X 2 3/8" SUB, X-OVER 2 3/8" TO 2 7/8" SWEDGE, 5 1/2" X 2 7/8" WEATHERFORD AS1X PACKER, 2 7/8" T-2 ON/OFF TOOL, 2 7/8" SEAT NIPPLE, 130-JTS OF 2 7/8" J-55 TBG - PUMPED 10 BBLS & DROPPED STANDING VALVE, CHASED W/ 35 BBLS NO PRESSURE, CHASED TO BOTTOM W/ SANDLINE TAGGED STANDING VALVE IN SN, POOH W/ SANDLINE, RU ISOLATION T & PRESS TEST TBG TO 3K PSI, SIWFN - CREW TRAVEL - TOOH 112-JTS TBG BREAKING & DOPING, CHANGE OUT 9 TBG COLLARS - CREW TRAVEL - JSA SAFETY MEETING - TOOH 112-JTS TBG BREAKING & DOPING, CHANGE OUT 9 TBG COLLARS - LD EXTRA 43-JTS TBG ON TBG FLOAT - MU & TIH W/ INJECTION STRING AS FOLLOWS: 2

3/8" RE-ENTRY GUIDE, 2 3/8 1.87 " XN" NIPPLE, 2' X 2 3/8" SUB, X-OVER 2 3/8" TO 2 7/8" SWEDGE, 5 1/2" X 2 7/8" WEATHERFORD AS1X PACKER, 2 7/8" T-2 ON/OFF TOOL, 2 7/8" SEAT NIPPLE, 130-JTS OF 2 7/8" J-55 TBG - PUMPED 10 BBLS & DROPPED STANDING VALVE, CHASED W/ 35 BBLS NO PRESSURE, CHASED TO BOTTOM W/ SANDLINE TAGGED STANDING VALVE IN SN, POOH W/ SANDLINE, RU ISOLATION T & PRESS TEST TBG TO 3K PSI, SIWFN - CREW TRAVEL **Finalized**
Daily Cost: $0
Cumulative Cost: $164,310

9/6/2013 Day: 10 **Conversion**

WC#2 on 9/6/2013 - Retrieve standing valve, ND BOPs, Set PKR & J-off, Pump PKR fluid, Land tbg on B-1 flange w/ 15K tension - RD RIG PRE-INSPECT TO MOVE TO NEXT LOCATION - CIRCULATED 50 BBLS OF PKR FLUID, SET PKR W/ 15K# TENSION LANDED W/ CE@ 4003.67, EOT@4013.67, PT CSG TO 1400 PSI, HELD 100% FOR 30 MIN, GOOD TEST - CREW TRAVEL - JSA SAFETY MEETING - RU RIG FLOOR, ND BOPS - RIH W/ SANDLINE & RETRIEVE STANDING VALVE - JSA SAFETY MEETING - CREW TRAVEL - CREW TRAVEL - JSA SAFETY MEETING - RIH W/ SANDLINE & RETRIEVE STANDING VALVE - RU RIG FLOOR, ND BOPS - CIRCULATED 50 BBLS OF PKR FLUID, SET PKR W/ 15K# TENSION LANDED W/ CE@ 4003.67, EOT@4013.67, PT CSG TO 1400 PSI, HELD 100% FOR 30 MIN, GOOD TEST - RD RIG PRE-INSPECT TO MOVE TO NEXT LOCATION - RD RIG PRE-INSPECT TO MOVE TO NEXT LOCATION - CIRCULATED 50 BBLS OF PKR FLUID, SET PKR W/ 15K# TENSION LANDED W/ CE@ 4003.67, EOT@4013.67, PT CSG TO 1400 PSI, HELD 100% FOR 30 MIN, GOOD TEST - RU RIG FLOOR, ND BOPS - RIH W/ SANDLINE & RETRIEVE STANDING VALVE
Daily Cost: $0
Cumulative Cost: $168,955

9/11/2013 Day: 11 **Conversion**

Rigless on 9/11/2013 - Conduct initial MIT - On 09/09/2013 Chris Jensen with the State of Utah DOGM was contacted concerning the initial MIT on the above listed well. On 09/09/2013 the casing was pressured up to 1110 psig and charted for 30 minutes with no pressure loss. The well was not injecting during the test. The tubing pressure was 0 psig during the test. There was a State representative available to witness the test - Chris Jensen. - On 09/09/2013 Chris Jensen with the State of Utah DOGM was contacted concerning the initial MIT on the above listed well. On 09/09/2013 the casing was pressured up to 1110 psig and charted for 30 minutes with no pressure loss. The well was not injecting during the test. The tubing pressure was 0 psig during the test. There was a State representative available to witness the test - Chris Jensen. - On 09/09/2013 Chris Jensen with the State of Utah DOGM was contacted concerning the initial MIT on the above listed well. On 09/09/2013 the casing was pressured up to 1110 psig and charted for 30 minutes with no pressure loss. The well was not injecting during the test. The tubing pressure was 0 psig during the test. There was a State representative available to witness the test - Chris Jensen. **Finalized**
Daily Cost: $0
Cumulative Cost: $194,667

Pertinent Files: Go to File List

Balcron Monument Federal 24-12J-9-16

Spud Date: 11/8/93

Put on Production: 12/30/93

GL: 5495' KB: 5505'

SURFACE CASING

CSG SIZE: 8-5/8"

GRADE: J-55

WEIGHT: 24#

LENGTH: 6jts. (271.28')

DEPTH LANDED: 279'

HOLE SIZE: 12-1/4"

CEMENT DATA: 150 sxs Class "G" cmt

PRODUCTION CASING

CSG SIZE: 5-1/2"

GRADE: J-55

WEIGHT: 15.5#

LENGTH: 129 jts. (5676.22')

HOLE SIZE: 7-7/8"

DEPTH LANDED: 5685.22'

CEMENT DATA: 204 sxs Prem. Lite II mixed & 215 sxs 50/50 POZ.

CEMENT TOP AT: 279'

TUBING

SIZE/GRADE/WT.: 2-7/8" / J-55 / 6.5#

NO. OF JOINTS: 128 jts (3987.4')

SEATING NIPPLE: 2-7/8" (1.10')

SN LANDED AT: 3997.4' KB

ON/OFF TOOL AT: 3998.5'

ARROW #1 PACKER CE AT: 4003.7'

XO 2-3/8 x 2-7/8 J-55 AT: 4007.3'

TBG PUP 2-3/8 J-55 AT: 4007.8'

X/N NIPPLE AT: 4011.9'

TOTAL STRING LENGTH: EOT @ 4013.96'

Injection Wellbore Diagram

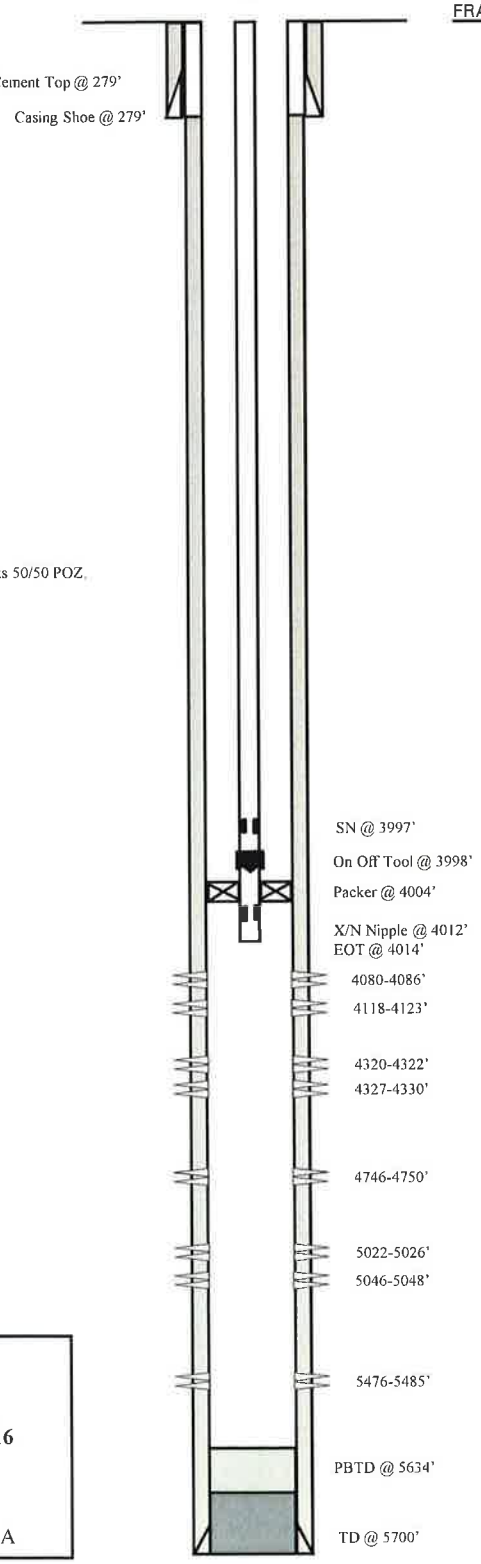

FRAC JOB

12/22/93	**4080'-4123'**	**Frac sands as follows:** with 33085 # 16-30 sand in 500 bbls of YF155 2% KCl water.
12/17/93	**4746'-4750'**	**Frac sands as follows:** with 13978# 16-30 sand in 247 bbls of YF155 2% KCl water. Screened out during flush. ATR: 15 BPM @ 2500 psi, max 3350 psi. ISI P 2450 psi, 10 min – 1488 psi, 15 min – 1484 psi.
12/14/93		**Frac sands as follows:** Screened out – no details available.
12/7/09		**Parted rods.** Updated rod and tubing details.
08/27/13	5022-5048'	**Frac A1 sand as follows:** 15000# 20/40 sand in 270 bbls Lightning 17 frac fluid.
08/31/13	4320-4330'	**Frac PB10 sand as follows:** 11194# 20/40 sand in 196bbls Lightning 17 frac fluid.
09/05/13		**Convert to Injection Well**
09/09/13		**Conversion MIT Finalized** – update tbg detail

PERFORATION RECORD

	4080'-4086'	2 JSPF	12 holes
	4118'-4123'	2 JSPF	10 holes
	4746'-4750'	2 JSPF	8 holes
	5476'-5485'	2 JSPF	18 holes
08/23/13	5046-5048'	3 JSPF	6 holes
08/23/13	5022-5026'	3 JSPF	12 holes
08/23/13	4327-4330'	3 JSPF	9 holes
08/23/13	4320-4322'	3 JSPF	6 holes

NEWFIELD

Balcron Monument Federal 24-12J-9-16

539' FSL & 1777' FWL

SE/SW Section 12-T9S-R16E

Duchesne Co, Utah

API # 43-013-31409; Lease # U-035521-A

LCN 09/12/13

STATE OF UTAH
DEPARTMENT OF NATURAL RESOURCES
DIVISION OF OIL, GAS, AND MINING

FORM 9

5.LEASE DESIGNATION AND SERIAL NUMBER: U-035521-A

SUNDRY NOTICES AND REPORTS ON WELLS

Do not use this form for proposals to drill new wells, significantly deepen existing wells below current bottom-hole depth, reenter plugged wells, or to drill horizontal laterals. Use APPLICATION FOR PERMIT TO DRILL form for such proposals.

6. IF INDIAN, ALLOTTEE OR TRIBE NAME:

7.UNIT or CA AGREEMENT NAME: GMBU (GRRV)

1. TYPE OF WELL Water Injection Well

8. WELL NAME and NUMBER: MONUMENT FED 24-12J

2. NAME OF OPERATOR: NEWFIELD PRODUCTION COMPANY

9. API NUMBER: 43013314090000

3. ADDRESS OF OPERATOR: Rt 3 Box 3630 , Myton, UT, 84052

PHONE NUMBER: 435 646-4825 Ext

9. FIELD and POOL or WILDCAT: MONUMENT BUTTE

4. LOCATION OF WELL
FOOTAGES AT SURFACE: 0539 FSL 1777 FWL
QTR/QTR, SECTION, TOWNSHIP, RANGE, MERIDIAN: Qtr/Qtr: SESW Section: 12 Township: 09.0S Range: 16.0E Meridian: S

COUNTY: DUCHESNE

STATE: UTAH

11. CHECK APPROPRIATE BOXES TO INDICATE NATURE OF NOTICE, REPORT, OR OTHER DATA

TYPE OF SUBMISSION	TYPE OF ACTION		
☐ NOTICE OF INTENT Approximate date work will start:	☐ ACIDIZE	☐ ALTER CASING	☐ CASING REPAIR
	☐ CHANGE TO PREVIOUS PLANS	☐ CHANGE TUBING	☐ CHANGE WELL NAME
✓ SUBSEQUENT REPORT Date of Work Completion: 1/15/2014	✓ CHANGE WELL STATUS	☐ COMMINGLE PRODUCING FORMATIONS	✓ CONVERT WELL TYPE
	☐ DEEPEN	☐ FRACTURE TREAT	☐ NEW CONSTRUCTION
	☐ OPERATOR CHANGE	☐ PLUG AND ABANDON	☐ PLUG BACK
☐ SPUD REPORT Date of Spud:	☐ PRODUCTION START OR RESUME	☐ RECLAMATION OF WELL SITE	☐ RECOMPLETE DIFFERENT FORMATION
	☐ REPERFORATE CURRENT FORMATION	☐ SIDETRACK TO REPAIR WELL	☐ TEMPORARY ABANDON
	☐ TUBING REPAIR	☐ VENT OR FLARE	☐ WATER DISPOSAL
☐ DRILLING REPORT Report Date:	☐ WATER SHUTOFF	☐ SI TA STATUS EXTENSION	☐ APD EXTENSION
	☐ WILDCAT WELL DETERMINATION	☐ OTHER	OTHER:

12. DESCRIBE PROPOSED OR COMPLETED OPERATIONS. Clearly show all pertinent details including dates, depths, volumes, etc.

The above reference well was put on injection at 1:50 PM on 01/15/2014.

Accepted by the Utah Division of Oil, Gas and Mining

Date: January 16, 2014

By:

NAME (PLEASE PRINT)	PHONE NUMBER	TITLE
Lucy Chavez-Naupoto	435 646-4874	Water Services Technician
SIGNATURE N/A		**DATE** 1/16/2014

RECEIVED: Jan. 16, 2014

NEWFIELD
ROCKY MOUNTAINS

June 14, 2012

Mr. Mark Reinbold
State of Utah
Division of Oil, Gas and Mining
1594 W North Temple
Salt Lake City, Utah 84114-5801

RE: Permit Application for Water Injection Well
Balcron Monument Federal #24-12J-9-16
Monument Butte Field, Lease #U-035521-A
Section 12-Township 9S-Range 16E
Duchesne County, Utah

Dear Mr. Reinbold:

Newfield Production Company herein requests approval to convert the Balcron Monument Federal #24-12J-9-16 from a producing oil well to a water injection well in the Monument Butte (Green River) Field.

I hope you find this application complete; however, if you have any questions or require additional information, please contact me at (303) 893-0102.

Sincerely,

Eric Sundberg
Regulatory Lead

RECEIVED
JUN 18 2012
DIV. OF OIL, GAS & MINING

1001 17th Street, Suite 2000 Denver, CO 80202 (303) 893-0102 Fax (303) 893-0103

NEWFIELD PRODUCTION COMPANY

APPLICATION FOR APPROVAL OF CLASS II INJECTION WELL

BALCRON MONUMENT FEDERAL #24-12J-9-16

MONUMENT BUTTE FIELD (GREEN RIVER) FIELD

LEASE #U-035521-A

JUNE 14, 2012

TABLE OF CONTENTS

STATE OF UTAH
DIVISION OF OIL, GAS AND MINING

APPLICATION FOR INJECTION WELL - UIC FORM 1

OPERATOR Newfield Production Company
ADDRESS 1001 17th Street, Suite 2000
Denver, Colorado 80202

Well Name and number: Balcron Monument Federal #24-12J-9-16
Field or Unit name: Monument Butte (Green River) Lease No. UTU-035521-A
Well Location: QQ SESW section 12 township 9S range 16E county Duchesne

Is this application for expansion of an existing project? . . . . . Yes [X] No [ ]
Will the proposed well be used for: Enhanced Recovery? . . . . . Yes [X] No [ ]
Disposal? . . . . . Yes [ ] No [X]
Storage? . . . . . Yes [ ] No [X]
Is this application for a new well to be drilled? . . . . . Yes [ ] No [X]
If this application is for an existing well,
has a casing test been performed on the well? . . . . . Yes [ ] No [X]
Date of test:
API number: 43-013-31409

Proposed injection interval: from 3889 to 5634
Proposed maximum injection: rate 500 bpd pressure 1114 psig
Proposed injection zone contains [x] oil, [ ] gas, and/or [ ] fresh water within 1/2 mile of the well.

IMPORTANT: Additional information as required by R615-5-2 should accompany this form.

List of Attachments: Attachments "A" through "H-1"

I certify that this report is true and complete to the best of my knowledge.

Name: Eric Sundberg Signature
Title Regulatory Lead Date 6/14/12
Phone No. (303) 893-0102

(State use only)
Application approved by Title
Approval Date

Comments:

Balcron Monument Federal 24-12J-9-16

Spud Date: 11/8/93
Put on Production: 12/30/93
GL: 5495' KB: 5505'

Proposed Injection
Wellbore Diagram

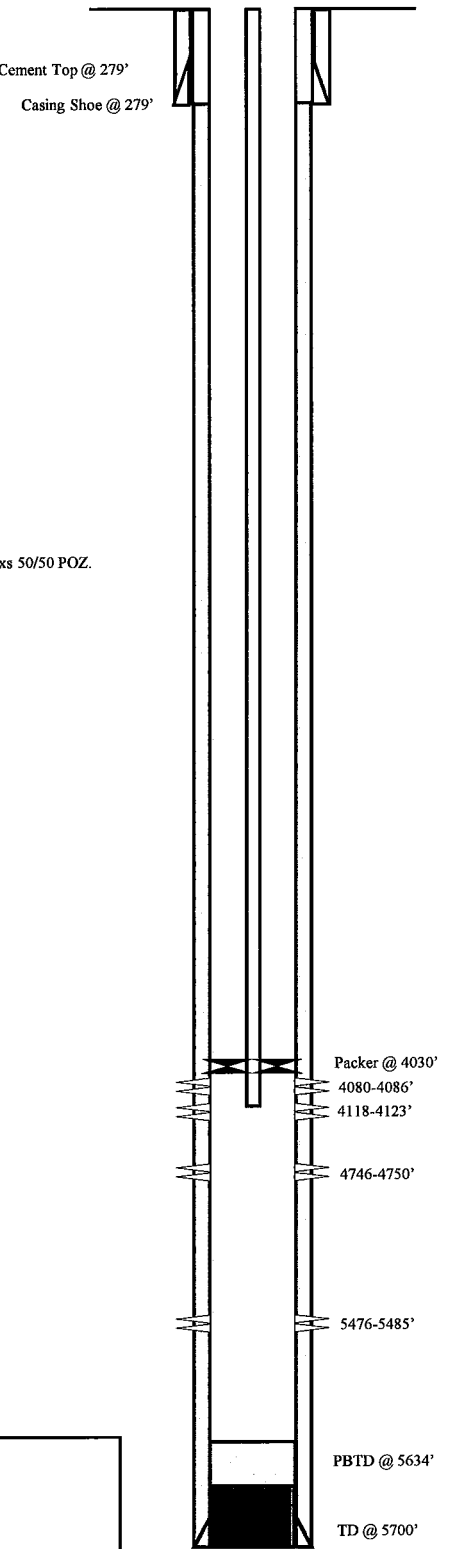

SURFACE CASING

CSG SIZE: 8-5/8"
GRADE: J-55
WEIGHT: 24#
LENGTH: 6jts. (271.28')
DEPTH LANDED: 279'
HOLE SIZE: 12-1/4"
CEMENT DATA: 150 sxs Class "G" cmt

PRODUCTION CASING

CSG SIZE: 5-1/2"
GRADE: J-55
WEIGHT: 15.5#
LENGTH: 129 jts. (5676.22')
HOLE SIZE: 7-7/8"
DEPTH LANDED: 5685.22'
CEMENT DATA: 204 sxs Prem. Lite II mixed & 215 sxs 50/50 POZ.
CEMENT TOP AT: 279'

TUBING

SIZE/GRADE/WT.: 2-7/8" / J-55 / 6.5#
NO. OF JOINTS: 172 jts (5361')
TUBING ANCHOR: 5371.7'
NO. OF JOINTS: 1 jts (64.2')
SEATING NIPPLE: 2-7/8" (1.1')
SN LANDED AT: 5438.7' KB
NO. OF JOINTS: 2 jts (5439.8')
TOTAL STRING LENGTH: EOT @ 5503'

FRAC JOB

12/22/93	**4080'-4123' Frac**	**Frac sands as follows:** with 33085 # 16-30 sand in 500 bbls of YF155 2% KCl water.
12/17/93	**4746'-4750'**	**Frac sands as follows:** with 13978# 16-30 sand in 247 bbls of YF155 2% KCl water. Screened out during flush. ATR 15 BPM @ 2500 psi, max 3350 psi. I SI P 2450 psi, 10 min – 1488 psi, 15 min – 1484 psi.
12/14/93		**Frac sands as follows:** Screened out – no details available.
12/7/09		Parted rods. Updated rod and tubing details.

PERFORATION RECORD

4080'-4086'	2 JSPF	12 holes
4118'-4123'	2 JSPF	10 holes
4746'-4750'	2 JSPF	8 holes
5476'-5485'	2 JSPF	18 holes

NEWFIELD

Balcron Monument Federal 24-12J-9-16
539' FSL & 1777' FWL
SE/SW Section 12-T9S-R16E
Duchesne Co, Utah
API # 43-013-31409; Lease # U-035521-A

JL 5/22/2012

WORK PROCEDURE FOR INJECTION CONVERSION

1. Rig up hot oil truck to casing. Pump water. Unseat pump. Flush rods. Trip out of hole with rods and pump.

2. Trip out of hole with tubing, breaking and doping every connection. Trip in hole with packer and tubing. Rig up water truck to casing. Pump packer fluid. Set packer.

3. Test casing and packer.

4. Rig down and move out.

REQUIREMENTS FOR INJECTION OF FLUIDS INTO RESERVOIRS
RULE R615-5-1

1. **Operations to increase ultimate recovery, such as cycling of gas, the maintenance of pressure, the introduction of gas, water or other substances into a reservoir for the purpose of secondary or other enhanced recovery or for storage and the injection of water into any formation for the purpose of water disposal shall be permitted only by order of the Board after notice and hearing.**

2. **A request for agency action for authority for the injection of gas, liquified petroleum gas, air, water or any other medium into any formation for any reason, including but not necessarily limited to the establishment of or the expansion of waterflood projects, enhanced recovery projects, and pressure maintenance projects shall contain:**

   2.1 The name and address of the operator of the project.

   Newfield Production Company
   1001 17th Street, Suite 2000
   Denver, Colorado 80202

   2.2 A plat showing the area involved and identifying all wells, including all proposed injection wells, in the project area and within one-half mile of the project area.

   See Attachment A.

   2.3 A full description of the particular operation for approval is requested.

   Approval is requested to convert the Balcron Monument Federal #24-12J-9-16 from a producing oil well to a water injection well in Monument Butte (Green River) Field.

   2.4 A description of the pools from which the identified wells are producing or have produced.

   The proposed injection well will inject into the Green River Formation.

   2.5 The names, description and depth of the pool or pools to be affected.

   The injection zone is in the Green River Formation. For the Balcron Monument Federal #24-12J-9-16 well, the proposed injection zone is from Garden Gulch to Castle Peak (3889' - 5634'). The confining strata directly above and below the injection zones are the Garden Gulch and the top of the Wasatch Formation or TD, which ever is shallower. The Garden Gulch Marker top is at 3567' and the TD is at 5700'.

   2.6 A copy of a log of a representative well completed in the pool.

   The referenced log for the Balcron Monument Federal #24-12J-9-16 is on file with the Utah Division of Oil, Gas and Mining.

2.7 A statement as to the type of fluid to be used for injection, its source and the estimated amounts to be injected daily.

The primary type and source of fluid to be used for injection will be culinary water commingled with produced water. The average estimated injection of fluids will be at a rate of 300 BPD, and the estimated maximum injection will be at a rate of 500 BPD.

2.8 A list of all operators and surface owners within one-half mile radius of the proposed project.

See Attachment B.

2.9 An affidavit certifying that said operators or owners and surface owners within a one-half mile radius have been provided a copy of the petition for injection.

See Attachment C.

2.10 Any additional information the Board may determine is necessary to adequately review the petition.

Newfield Production Company will supply any additional information requested by the Utah Division of Oil, Gas and Mining.

4.0 Establish recovery projects may be expanded and additional wells placed on injection only upon authority from the Board after notice and hearing or by administrative approval.

This proposed injection well is on a Federal lease (Lease #U-035521-A) in the Monument Butte Federal (Green River) Field, and this request is for administrative approval.

REQUIREMENTS FOR CLASS II INJECTION WELLS INCLUDING WATER DISPOSAL, STORAGE AND ENHANCED RECOVERY WELLS
SECTION V – RULE R615-5-2

1. **Injection well shall be completed, equipped, operated, and maintained in a manner that will prevent pollution and damage to any USDW, or other resources and will confine injected fluids to the interval approved.**

2. **The application for an injection well shall include a properly completed Form DOGM-UIC-1 and the following:**

   2.1 **A plat showing the location of the injection well, all abandoned or active wells within a one-half mile radius of the proposed wells, and the surface owner and the operator of any lands or producing leases, respectively, within a one-half mile radius of the proposed injection well.**

   See Attachments A and B.

   2.2 **Copies of electrical or radioactive logs, including gamma ray logs, for the proposed well run prior to the installation of casing and indicating resistivity, spontaneous potential, caliper and porosity.**

   All logs are on file with the Utah Division of Oil, Gas and Mining.

   2.3 **A copy of a cement bond or comparable log run for the proposed injection well after casing was set and cemented.**

   A copy of the cement bond log is on file with the Utah Division of Oil, Gas and Mining.

   2.4 **Copies of logs already on file with the Division should be referenced, but need not be refiled.**

   All copies of logs are on file with the Utah Division of Oil, Gas and Mining.

   2.5 **A description of the casing or proposed casing program of the injection well and of the proposed method for testing the casing before use of the well.**

   The casing program is 8-5/8", 24# surface casing run to 279' KB, and 5-1/2", 15.5# casing run from surface to 5685' KB. A casing integrity test will be conducted at the time of conversion. See Attachment E.

   2.6 **A statement as to the type of fluid to be used for injection, its source and estimated amounts to be injected daily.**

   The primary type and source of fluid to be used for injection will be culinary water commingled with produced water. The estimated average rate of injection will be 300 BPD, and the estimated maximum rate of injection will be 500 BPD.

   2.7 **Standard laboratory analysis of the fluid to be injected, the fluid in the formation into which the fluid is being injected, and the compatibility of the fluids.**

   See Attachment F.

The proposed average and maximum injection pressures.

The proposed average injection pressure will be approximately 1100 psig and the maximum injection pressure will not exceed 1114 psig.

2.8 Evidence and data to support a finding that the proposed injection well will not initiate fractures through the overlying strata or a confining interval that could enable the injected fluid or formation fluid to enter the fresh water strata.

The minimum fracture gradient for the Balcron Monument Federal #24-12J-9-16, for existing perforations (4080' - 5485') calculates at 0.64 psig/ft. The maximum injection pressures will be limited so as not to exceed this gradient. A step rate test will be performed periodically to ensure we are below parting pressure. The proposed maximum injection pressure is 1114 psig. We may add additional perforations between 3567' and 5700'. See Attachments G and G-1.

2.9 Appropriate geological data on the injection interval and confining beds, including the geologic name, lithologic description, thickness, depth, and lateral extent.

In the Balcron Monument Federal #24-12J-9-16, the proposed injection zone (3889' - 5634') is in the Garden Gulch to the Castle Peak of the Green River Formation. The reservoir is a very fine-grained sandstone with minor imbedded shale streaks. The estimated porosity is 13%. The members are composed of porous and permeable lenticular calcareous sandstone and low porosity carbonates and calcareous shale. The porous and lenticular sandstone varies in thickness from 0-31' and is confined to the Monument Butte Federal Field. Outside the Monument Butte Federal Field, the sandstone is composed of tight, very fine, silty, calcareous sandstone, less than 3' thick. The stratum confining the injection zone is composed of tight, moderately calcareous, sandy lacustrine shale. All of the confining strata are impermeable, and will effectively seal off the oil, gas, and water of the injection zone from any strata directly above or below it.

2.10 A review of the mechanical condition of each well within a one-half mile radius of the proposed injection well to assure that no conduit exists that could enable fluids to migrate up or down the wellbore and enter the improper intervals.

See Attachments E through E-18.

Additionally, the injection system will be equipped with high and low pressure shut down devices that will automatically shut in injection waters if a system blockage or leakage occurs. One way check valves will also ensure proper flow management. Relief valves will also be utilized for high-pressure relief.

2.11 An affidavit certifying that a copy of the application has been provided to all operators or owners, and surface owners within a one-half mile radius of the proposed injection well.

See Attachment C.

2.12 Any other information that the Board or Division may determine is necessary to adequately review the application.

Newfield Production Company will supply any requested information to the Board or Division.

ATTACHMENT A

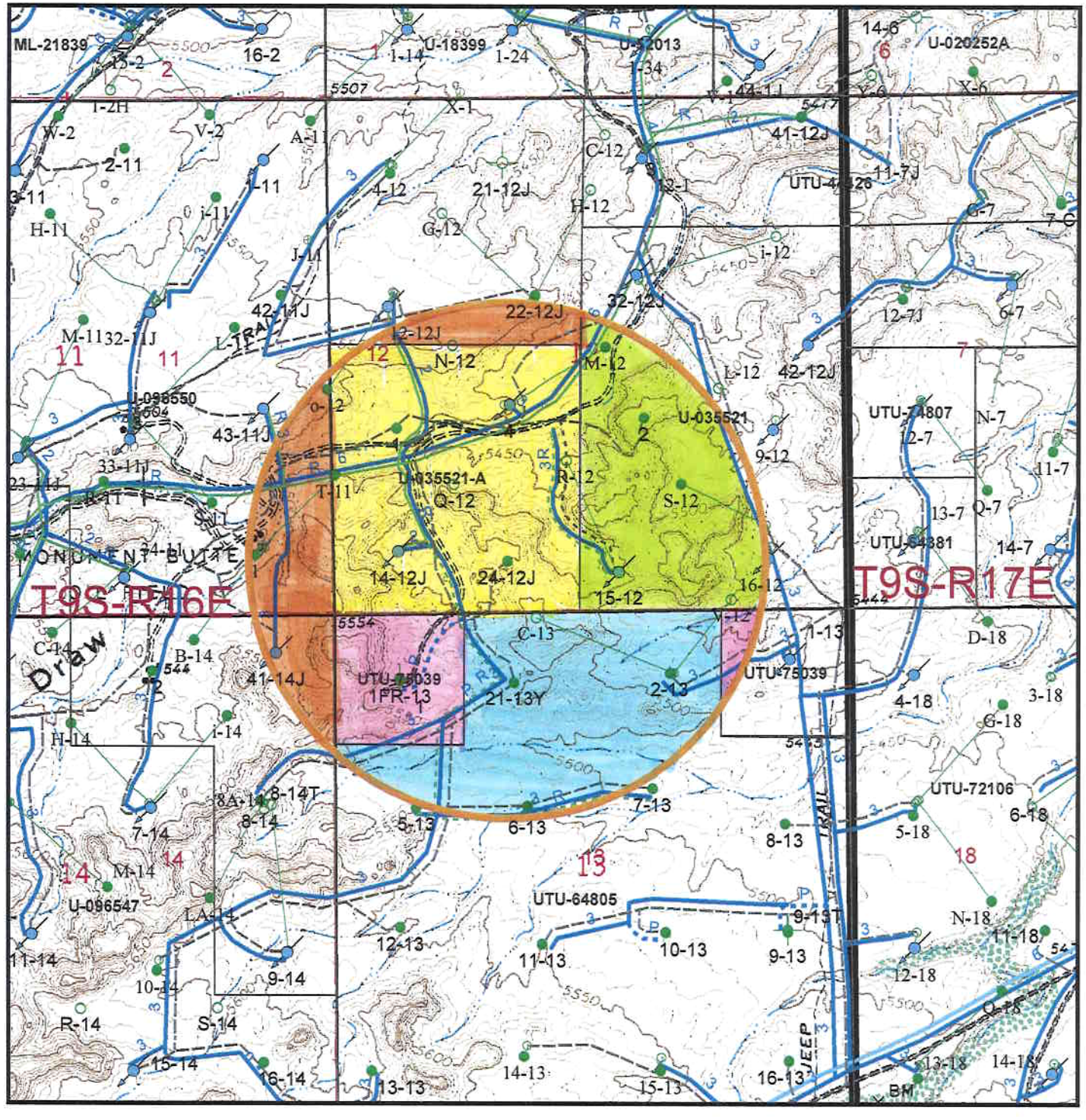

WellStatus_Half_Mile_Buffer
Well Status
- Location
- CTI
- Surface Spud
- Drilling
- Waiting on Completion
- Producing Oil Well
- Producing Gas Well
- Water Injection Well
- Dry Hole
- Temporarily Abandoned
- Plugged & Abandoned
- Shut In
- Countyline

Injection system
- high pressure
- low pressure
- proposed
- return
- return proposed
- Leases
- Mining tracts

UTU-035521A
UTU-096550
UTU-035521
UTU-64805
UTU-75039

Mon 24-12J
Section 12, T9S-R16E

NEWFIELD
ROCKY MOUNTAINS

1 in = 1,500 feet

1/2 Mile Radius Map
Duchesne & Uintah Counties

1001 17th Street Suite 2000
Denver, Colorado 80202
Phone: (303) 893-0102

March 13, 2012

ATTACHMENT A-1

EXHIBIT "F"

T9S, R16E, S.L.B. & M.

EQUITABLE RESOURCES ENERGY CO.

WELL LOCATION, BALCRON MONUMENT FEDERAL #24-12J, LOCATED AS SHOWN IN THE SE 1/4 SW 1/4 OF SECTION 12, T9S, R16E, S.L.B. & M, DUCHESNE COUNTY UTAH.

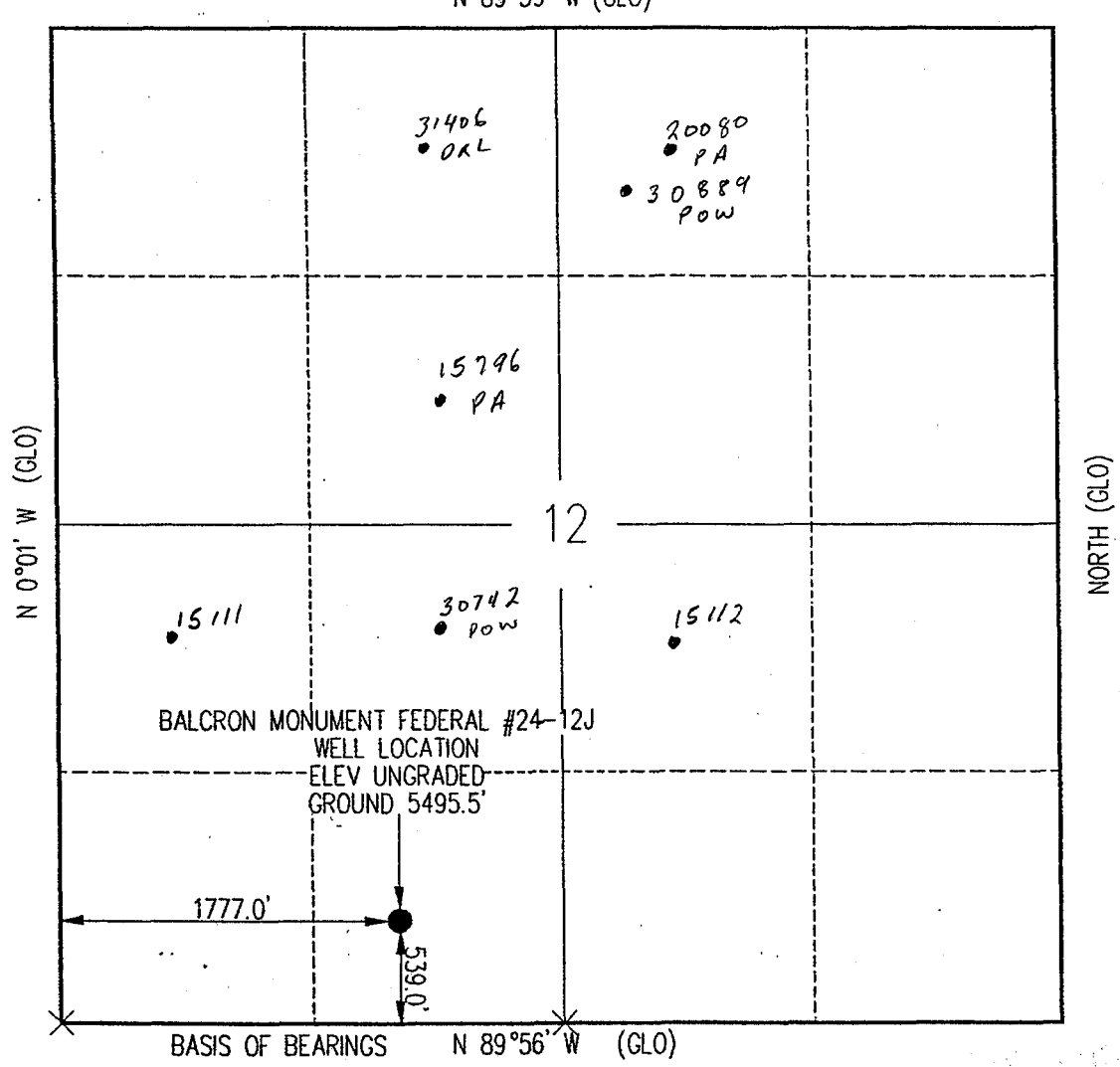

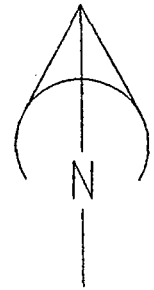

THIS IS TO CERTIFY THAT THE ABOVE PLAT WAS PREPARED FROM FIELD NOTES OF ACTUAL SURVEYS MADE BY ME OR UNDER MY SUPERVISION AND THAT THE SAME ARE TRUE AND CORRECT TO THE BEST OF MY KNOWLEDGE AND BELIEF.

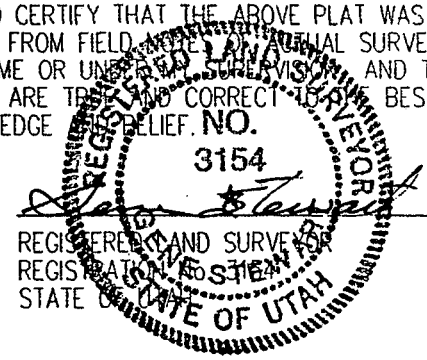

REGISTERED LAND SURVEYOR
REGISTRATION NO. 3154
STATE OF UTAH

X = SECTION CORNERS LOCATED
BASIS OF BEARINGS; G.L.O. PLAT 1911
BASIS OF ELEV; U.S.G.S. 7-1/2 min QUAD (MYTON SE)

SEP 1 1993

WEATHER: CLEAR & HOT	
DATE: 8/4/93	
SCALE: 1" = 1000'	
SURVEYED BY: GS ZD	
FILE: MF 24-12	

TRI-STATE
LAND SURVEYING, INC.
38 WEST 100 NORTH, VERNAL, UTAH 84078
801-781-2501

EXHIBIT B

#	Legal Description	Lessor & Expiration	Lessee & Operating Rights	Surface Owner
1	T9S-R16E SLM Section 12: SW	USA UTU-035521A HBP	Newfield Production Company Newfield RMI LLC ABO Petroleum Corp Carl B Field Montana & Wyoming Oil CO MYCO Industries Inc OXY Y-1 Company Vaughey & Vaughey Bonnie B Warne John R Warne Yates Petroleum Corp	USA
2	T9S-R16E SLM Section 11: E2, NW, NESW Section 12: NW Section 14: N2NE, SENE, NESE	USA UTU-096550 HBP	Newfield Production Company Newfield RMI LLC ABO Petroleum Corp MYCO Industries Inc OXY Y-1 Company Yates Petroleum Corp	USA
3	T9S-R16E SLM Section 12: S2NE, SE	USA UTU -35521 HBP	Newfield Production Company Newfield RMI LLC ABO Petroleum Corp Carl B Field Montana & Wyoming Oil CO MYCO Industries Inc OXY Y-1 Company Vaughey & Vaughey Bonnie B Warne John R Warne Yates Petroleum Corp	USA

4	T9S-R16E SLM Section 13: NWNE, NENW, S2N2, S2	USA UTU-64805 HBP	Newfield Production Company Newfield RMI LLC ABO Petroleum Corp MYCO Industries Inc OXY Y-1 Company Yates Petroleum Corp	USA
5	T9S-R16E SLM Section 13: NENE, NWNW	USA UTU-75039 HBP	Newfield Production Company Newfield RMI LLC ABO Petroleum Corp MYCO Industries Inc OXY Y-1 Company Yates Petroleum Corp	USA

ATTACHMENT C

CERTIFICATION FOR SURFACE OWNER NOTIFICATION

RE: Application for Approval of Class II Injection Well
Balcron Monument Federal #24-12J-9-16

I hereby certify that a copy of the injection application has been provided to all surface owners within a one-half mile radius of the proposed injection well.

Signed: _____
Newfield Production Company
Eric Sundberg
Regulatory Lead

Sworn to and subscribed before me this 14th day of June, 2012.

Notary Public in and for the State of Colorado: Candice L. Twitty

My Commission Expires: My Commission Expires 02/10/2013

CANDICE L. TWITTY NOTARY PUBLIC STATE OF COLORADO MY COMMISSION EXPIRES 2/10/2013

ATTACHMENT E

Balcron Monument Federal 24-12J-9-16

Spud Date: 11/8/93
Put on Production: 12/30/93
GL: 5495' KB: 5505'

Wellbore Diagram

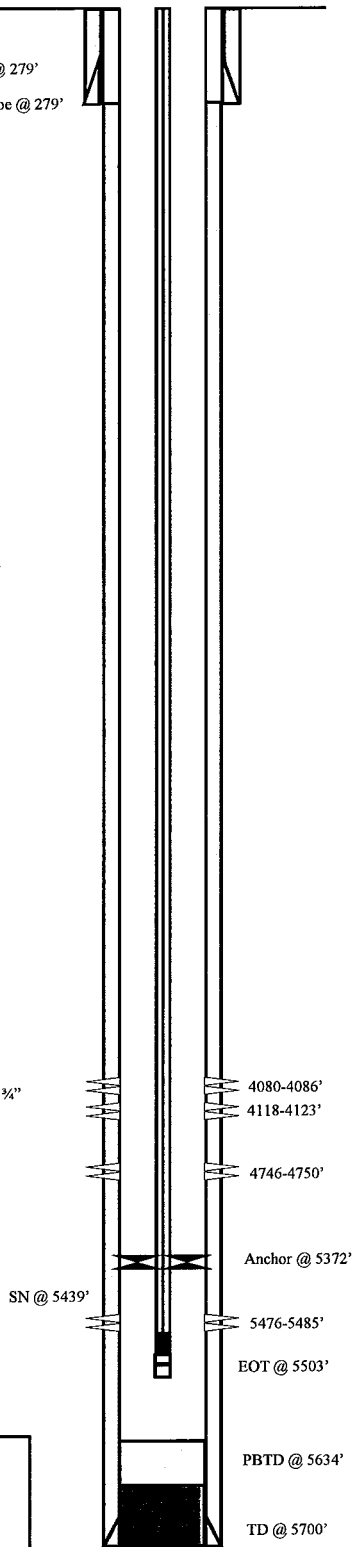

SURFACE CASING

CSG SIZE: 8-5/8"
GRADE: J-55
WEIGHT: 24#
LENGTH: 6jts. (271.28')
DEPTH LANDED: 279'
HOLE SIZE: 12-1/4"
CEMENT DATA: 150 sxs Class "G" cmt

PRODUCTION CASING

CSG SIZE: 5-1/2"
GRADE: J-55
WEIGHT: 15.5#
LENGTH: 129 jts. (5676.22')
HOLE SIZE: 7-7/8"
DEPTH LANDED: 5685.22'
CEMENT DATA: 204 sxs Prem. Lite II mixed & 215 sxs 50/50 POZ.
CEMENT TOP AT: 279'

TUBING

SIZE/GRADE/WT.: 2-7/8" / J-55 / 6.5#
NO. OF JOINTS: 172 jts (5361')
TUBING ANCHOR: 5371.7'
NO. OF JOINTS: 1 jts (64.2')
SEATING NIPPLE: 2-7/8" (1.1')
SN LANDED AT: 5438.7' KB
NO. OF JOINTS: 2 jts (5439.8')
TOTAL STRING LENGTH: EOT @ 5503'

SUCKER RODS

POLISHED ROD: 1-1/4" x 22'
SUCKER RODS: 77- ¾" guided rods (4 per), 114- ¾" sucker rods, 20- ¾" guided rods (4 per), 6- 1 ½" weight bars
PUMP SIZE: 2 ½ x 1 1/2 x 16' RHAC
STROKE LENGTH: 76
PUMP SPEED: 4.5 SPM

FRAC JOB

12/22/93	**4080'-4123'Frac**	**Frac sands as follows:** with 33085 # 16-30 sand in 500 bbls of YF155 2% KCl water.
12/17/93	**4746'-4750'**	**Frac sands as follows:** with 13978# 16-30 sand in 247 bbls of YF155 2% KCl water. Screened out during flush. ATR 15 BPM @ 2500 psi, max 3350 psi. I SI P 2450 psi, 10 min – 1488 psi, 15 min – 1484 psi.
12/14/93		**Frac sands as follows:** Screened out – no details available.
12/7/09		Parted rods. Updated rod and tubing details.

PERFORATION RECORD

4080'-4086'	2 JSPF	12 holes
4118'-4123'	2 JSPF	10 holes
4746'-4750'	2 JSPF	8 holes
5476'-5485'	2 JSPF	18 holes

NEWFIELD

Balcron Monument Federal 24-12J-9-16
539' FSL & 1777' FWL
SE/SW Section 12-T9S-R16E
Duchesne Co, Utah
API # 43-013-31409; Lease # U-035521-A

KC 2-26-09

ATTACHMENT E-1

Monument Fed. 14-12J-9-16

Spud Date: 11/03/93
Put on Production: 12/18/93
Put on Injection: 10/28/94

GL: 5487' KB: 5497'

Initial Production: 70 BOPD, NM MCFD, 20 BWPD

Injection Wellbore Diagram

SURFACE CASING

CSG SIZE: 8-5/8"
GRADE: J-55
WEIGHT: 24#
LENGTH: 7 jts. (271.17')
DEPTH LANDED: 279' KB
HOLE SIZE: 12-1/4"
CEMENT DATA: 150 sxs Class "G" cmt, est 4 bbls cmt to surf.

PRODUCTION CASING

CSG SIZE: 5-1/2"
GRADE: K-55
WEIGHT: 15.5#
LENGTH: 131 jts. (5718.17')
DEPTH LANDED: 5727.17'
HOLE SIZE: 7-7/8"
CEMENT DATA: 220 sxs Lead cement & 260 sxs 50/50 POZ.
CEMENT TOP AT: ? per CBL

TUBING

SIZE/GRADE/WT.: 2-7/8" / J-55 / 6.5#
NO. OF JOINTS: 129 jts (4002.65')
SEATING NIPPLE: 2-7/8" (1.12')
SN LANDED AT: 4013.77' KB
2 7/8" x 2 3/8" CROSSOVER: 4014.52' KB
PACKER: 4020.72' KB
SIZE/GRADE/WT.: 2-3/8" / J-55 / 4.5#
NO. OF JOINTS: 31 jts (960.38')
PACKER: 4987.90' KB
SEATING NIPPLE: 2-3/8" (1.10')
SN LANDED AT: 4989.00' KB
TOTAL STRING LENGTH: EOT @ 4989.00'

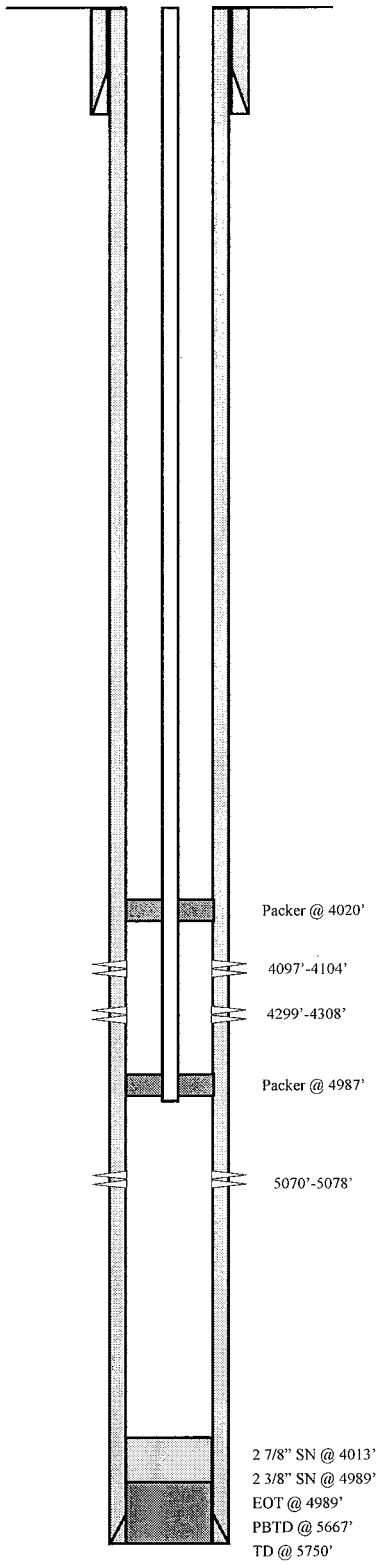

FRAC JOB

12/06/93	5070'-5078'	**Frac zone as follows:** 25,446# 20/40 sand in 286 bbls 2% KCl. Treated @ avg press of 2341 psi w/avg rate of 17.4 BPM. ISIP 3578 psi. Calc. flush: 5070 gal. Actual flush: 5030 gal.
12/09/93	4097'-4308'	**Frac zone as follows:** 41,300# 20/40 sand in 457 bbls 2% KCl. Treated @ avg press of 2527 psi w/avg rate of 19 BPM. ISIP 1606 psi. Calc. flush: 4097 gal. Actual flush: 4050 gal.
04-08-10		**5YR MIT**

PERFORATION RECORD

12/06/93	5070'-5078'	2 SPF	16 holes
12/08/93	4299'-4308'		06 holes
12/08/93	4097'-4104'		05 holes

NEWFIELD

Monument Fed. #14-12j-9-16
660' FSL & 660' FWL
SWSW Section 12-T9S-R16E
Duchesne Co, Utah
API #43-013-31411; Lease #U-035521-A

LCN 04-12-10

ATTACHMENT E-2

Monument Fed. 41-14J-9-16

Spud Date: 12/01/93
Put on Production: 1/07/94
Put on Injection: 10/29/93

GL: 5529' KB: 5539'

Initial Production: 20 BOPD, 60 MCFD, 10 BWPD

Injection Wellbore Diagram

SURFACE CASING

CSG SIZE: 8-5/8"
GRADE: J-55
WEIGHT: 24#
LENGTH: 6 jts. (271.04')
DEPTH LANDED: 279'
HOLE SIZE: 12-1/4"
CEMENT DATA: 150 sxs Class "G" cmt, est 4 bbls cmt to surf.

PRODUCTION CASING

CSG SIZE: 5-1/2"
GRADE: K-55
WEIGHT: 15.5#
LENGTH: 131 jts. (5637.81')
DEPTH LANDED: 5646.81' KB
HOLE SIZE: 7-7/8"
CEMENT DATA: 225 sxs Hi-Lift & 261 sxs Class "G".
CEMENT TOP AT: 210' per CBL

TUBING

SIZE/GRADE/WT.: 2-7/8" / J-55 / 6.5#
NO. OF JOINTS: 149 jts (4627.28')
SEATING NIPPLE: 2-7/8" (1.10')
SN LANDED AT: 4627.3' KB
2 7/8" x 2 3/8" CROSS-OVER: 4628.4' KB
PACKER: 4628.8' KB
TOTAL STRING LENGTH: EOT @ 4638'

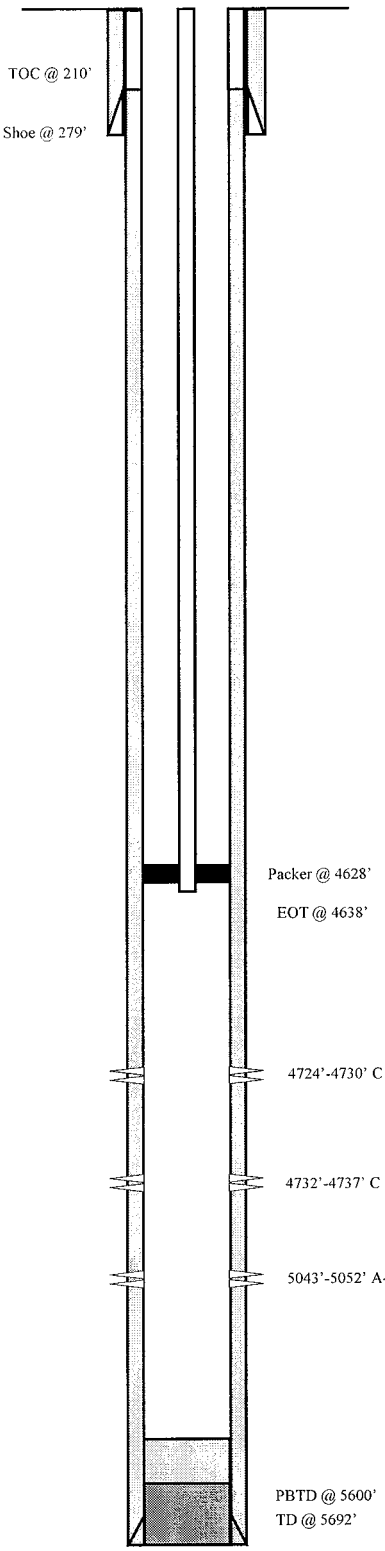

FRAC JOB

12/23/93	5043'-5052'	**Frac sand as follows:** 12,500# 20/40 sand + 6,500# 16/30 sand in 194 bbls 2% KCl fluid. Treated @ avg press of 2300 psi w/avg rate of 19 BPM. ISIP 2800 psi. Calc. flush: 5043 gal, Actual flush: 1344 gal. Screened out.
12/28/93	4724'-4737'	**Frac sand as follows:** 27,500# 16/30 sand in 354 bbls 2% KCl fluid. Treated @ avg press of 2100 psi w/avg rate of 19.5 BPM. ISIP 2100 psi. Calc. flush: 4724 gal, Actual flush: 4660 gal.
9/30/08		**Zone Stimulation.**
04-08-10		**5 YR MIT**

PERFORATION RECORD

12/22/93	5043'-5052'	2 JSPF	18 holes
12/28/93	4732'-4737'	2 JSPF	10 holes
12/28/93	4724'-4730'	2 JSPF	12 holes

NEWFIELD

Monument Fed. #41-14J-9-16
363' FNL & 600' FEL
NENE Section 14-T9S-R16E
Duchesne Co, Utah
API #43-013-31408; Lease #U-096550

LCN 4-12-10

ATTACHMENT E-3

Monument Federal #22-12j-9-16

Spud Date: 7/05/94 (Re-entry)

Put on Production: 8/04/94

GL: 5503' KB: 5515'

Wellbore Diagram

Initial Production: 12 BOPD, NM MCFD, 0 BWPD

SURFACE CASING

CSG SIZE: 9-5/8"

GRADE:

WEIGHT: 32.30#

DEPTH LANDED: 228' KB

HOLE SIZE:12-1/4"

CEMENT DATA: 200 sxs cement.

PRODUCTION CASING

CSG SIZE: 5-1/2"

GRADE: K-55

WEIGHT: 15.5#

DEPTH LANDED: 5294' KB

HOLE SIZE: 7-7/8"

CEMENT DATA: 327 sxs cement

CEMENT TOP AT: 3820' per CBL

TUBING

SIZE/GRADE/WT.: 2-7/8" / J-55 / 6.5#

NO. OF JOINTS: 160 jts (4949.2')

TUBING ANCHOR: 4949.2' KB

NO. OF JOINTS: 1 jts (31.6')

SEATING NIPPLE: 2-7/8" (1.10')

SN LANDED AT: 4983.6' KB

NO. OF JOINTS: 1 jt (30.2')

TOTAL STRING LENGTH: EOT @ 5051' KB

SUCKER RODS

POLISHED ROD: 1-1/2" x 26' SM

SUCKER RODS: 1 x 7/8" = 2' pony rod, 1 x 7/8" = 4' pony rod, 1 x 7/8" = 8' pony rod, 98 x 7/8" = 2450' 4 per guided rod, 76 x ¾" = 1900' sucker rod, 20 x ¾" = 500' 4 per guided rod, 6 x 1 ½" = 150' sinker bar.

PUMP SIZE: 2-1/2" x 1-1/2" x 21' RHAC

STROKE LENGTH: 84"

PUMP SPEED, SPM: 4 SPM

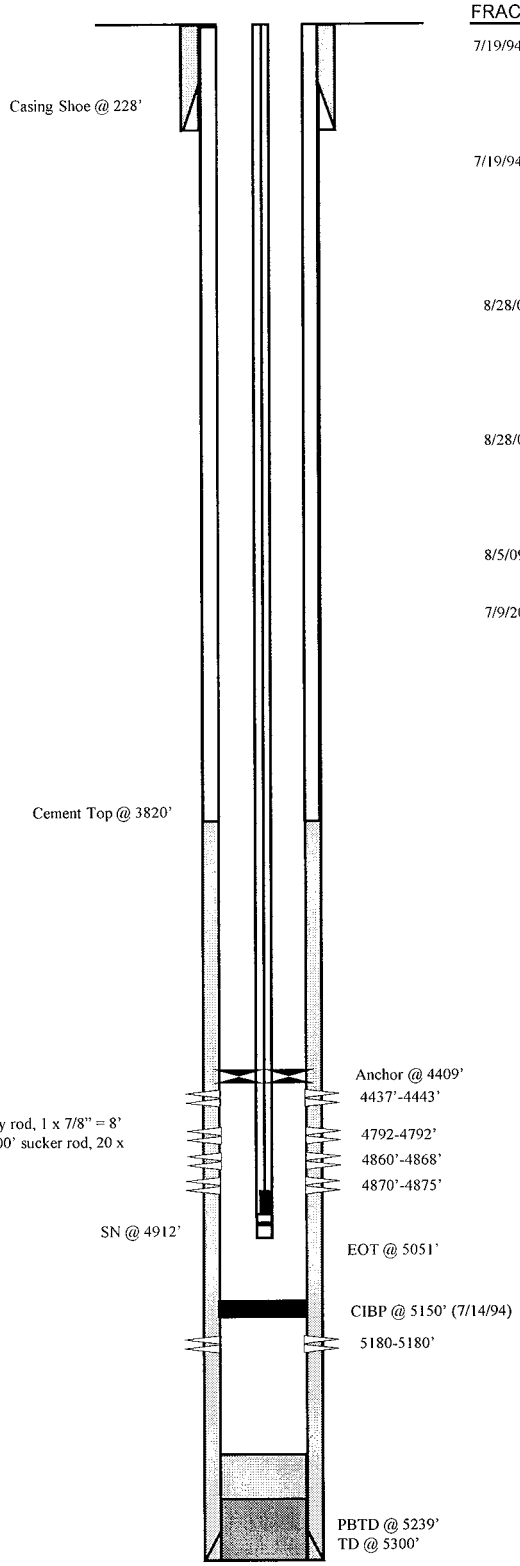

FRAC JOB

7/19/94	4792'-4875'	**Frac zone as follows:** 27,000# 16/30 sand in 318 bbls frac fluid. Treated @ avg press of 4600 psi w/avg rate of 17.4 BPM. ISIP 3150 psi. Calc. flush: 1213 gal. Actual flush: 1205 gal.
7/19/94	4437'-4443'	**Frac zone as follows:** 21,280# 16/30 sand in 148 bbls frac fluid. Treated @ avg press of 4800 psi w/avg rate of 20 BPM. ISIP not recorded. Calc. flush: 2098 gal. Actual flush: 1092 gal. Screened out w/ 4890# sand in casing.
8/28/08	5176-5192'	**Frac A3 sds as follows:** 24,666# 20/40 sand in 283 bbls of Lightning 17 fluid. Treated w/ ave pressure of 3548 psi @ ave rate of 13.1 BPM. ISIP 2270 psi. Actual flush: 1285 gals.
8/28/08	4790-4796'	**Frac D3 & C sds as follows:** 23,599# 20/40 sand in 244 bbls of Lightning 17 fluid. Treated w/ ave pressure of 4323 psi @ ave rate of 13.3 BPM. ISIP 3992 psi. Actual flush: 1189 gals.
8/5/09		Tubing Leak. Updated rod & tubing details.
7/9/2011		Parted rods. Updated rod & tubing.

PERFORATION RECORD

7/12/94	5180-5180	3 JSPF	3 holes
7/14/94	4870'-4875'	4 JSPF	20 holes
7/14/94	4860'-4868'	4 JSPF	32 holes
7/14/94	4792-4792'	3 JSPF	3 holes
7/12/94	4437-4443'	4 JSPF	24 holes

NEWFIELD

Monument Fed. #22-12j
2017' FNL & 2098' FWL
SENW Section 12-T9S-R16E
Duchesne Co, Utah
API #43-013-15796; Lease #U-096550

VC 7/18/2011

Attachment E-4

C & O Govt. 1-12-9-16

Spud Date: 10/12/64
Put on Production: 12/10/64
GL: 5456' KB: 5468'

Wellbore Diagram

SURFACE CASING

CSG SIZE: 10 3/4"
WEIGHT: 32.75#
LENGTH: 8 jts (217')
DEPTH LANDED: 229'
HOLE SIZE: 12-1/4"
CEMENT DATA: 135 cu. ft. Ideal Type II

PRODUCTION CASING

CSG SIZE: 5-1/2" / 17# / N-80
LENGTH: 41 jts. (1253.85')
CSG SIZE: 5-1/2" / 15.5# / J-55
LENGTH: 127 jts. (3927.00')
CSG SIZE: 5-1/2" / 17# / N-80
LENGTH: 1 jt. (20.00')
DEPTH LANDED: 5200.00'
HOLE SIZE: 7-7/8"
CEMENT DATA: 315 cu. ft. 50/50 POZ + 75 sxs 50/50 POZ.
CEMENT TOP AT: 4750' per CBL

TUBING

SIZE/GRADE/WT: 2 7/8" / J-55 / 6.5#
NO. OF JOINTS: 154 jts (4755.6')
TUBING ANCHOR: 4767.6' KB
NO. OF JOINTS: 8 jts (250.2')
SEATING NIPPLE: 2 7/8" (1.10')
SN LANDED AT: 5020.6' KB
NO. OF JOINTS: 1 jts Perf sub (4')
NO. OF JOINTS: 1 jts (30.9')
TOTAL STRING LENGTH: EOT @ 5057'

SUCKER RODS

POLISHED ROD: 1 1/4" x 16' polished rods
SUCKER RODS: 1-2' & 1-4' x ¾" pony rods, 93-3/4" guided rods, 65-3/4" sucker rods, 34-3/4" guided rods, 4-1 5/8" wt bars, 5 1" stabilizer rods
PUMP SIZE: 2 1/2" x 1 1/2" x 16' RHAC
STROKE LENGTH: 44"
PUMP SPEED, SPM: 4 SPM
LOGS: IES, SGR, ML, CBL

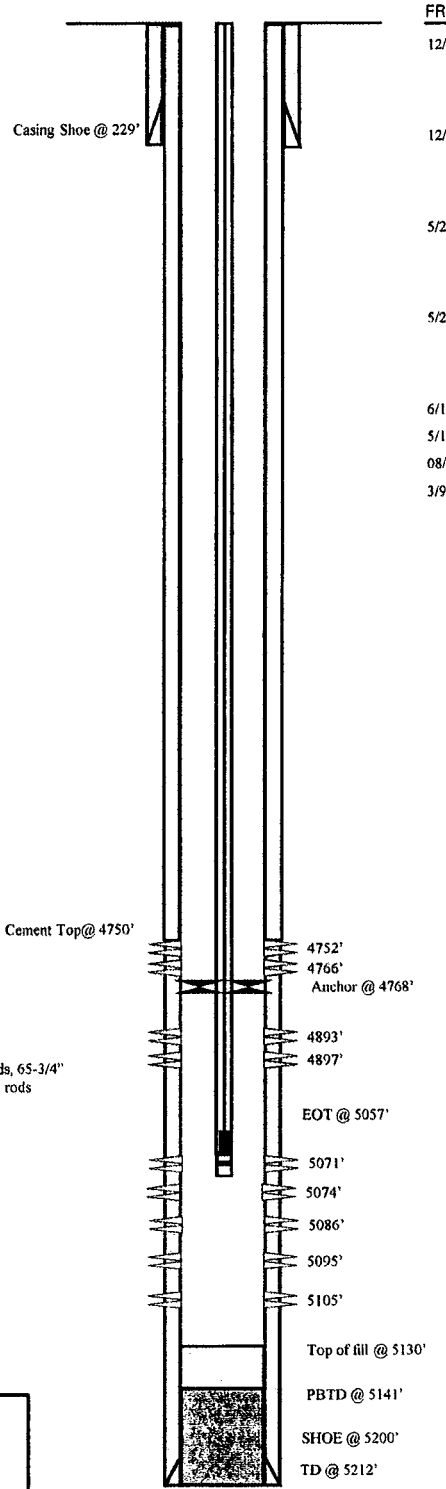

FRAC JOB

12/64	5071'-5074'	**Frac zone as follows:** 13,900# sand + 3150# glass beads in 721 bbls lease crude oil. Treated @ avg press of 3850 psi w/avg rate of 37 BPM.
12/64	4893'-4897'	**Frac zone as follows:** 13,900# sand + 1575# glass beads in 721 bbls lease crude oil. Treated @ avg press of 4000 psi w/avg rate of 29 BPM
5/20/73	5071'-5105'	**Frac zone as follows:** 16,500# 10/20 sand in 381 bbls frac fluid. Treated @ avg press of 2300 psi w/avg rate of 6 BPM.
5/21/73	4752'-4766'	**Frac zone as follows:** 14,000# 10/20 sand in 381 bbls frac fluid. Treated @ avg press of 3500 psi w/avg rate of 16 BPM.
6/18/99		Pump change. Update rod and tubing details.
5/13/03		Tubing leak. Update rod and tubing details.
08/29/06		Pump Change. Update rod & Tubing details
3/9/12		Tubing Leak. Updated rod & tubing detail.

PERFORATION RECORD

12/64	5074'	4 SPF	04 holes
12/64	5071'	4 SPF	04 holes
12/64	4897'	4 SPF	04 holes
12/64	4893'	4 SPF	04 holes
05/93	5105'	3 SPF	03 holes
05/93	5095'	3 SPF	03 holes
05/93	5086'	3 SPF	03 holes
05/93	4766'	3 SPF	03 holes
05/93	4752'	3 SPF	03 holes

NEWFIELD

C&O Gov't. 1-12-9-16
1905 FSL & 660 FWL
NWSW Section 12-T9S-R16E
Duchesne Co, Utah
API #43-013-15111 Lease #U-035521 A

HC 4/12/12

ATTACHMENT E-5

C&O Govt. #2-12-9-16

Spud Date: 6/15/1965
Put on Production: 7/23/1965
GL: 5515' KB: 5525'

Wellbore Diagram

Initial Production: 130 BOPD, NM MCFD, 15 BWPD

SURFACE CASING

CSG SIZE: 8-5/8"
GRADE: J-55
WEIGHT: 24#
LENGTH: 271'
DEPTH LANDED: 281'
HOLE SIZE:12-1/4"
CEMENT DATA: 176 sxs cement.

PRODUCTION CASING

CSG SIZE: 5-1/2" / 14#
LENGTH: 0-2500'
CSG SIZE: 5-1/2" / 15.5#
LENGTH: 2500'-5260'
DEPTH LANDED: 5260'
HOLE SIZE: 7-7/8"
CEMENT DATA: 206 cu. ft. slurry
CEMENT TOP AT: 4300' per CBL

TUBING

SIZE/GRADE/WT.: 2-7/8" / J-55
NO. OF JOINTS: 161 jts (5000.62')
TUBING ANCHOR: 5010.62'
NO. OF JOINTS:1 jts (32.64')
SEATING NIPPLE: 2-7/8" (1.10')
SN LANDED AT: 5046.06'
NO. OF JOINTS: 2 jts (64.32)
TOTAL STRING LENGTH: EOT @ 5111.53'

SUCKER RODS

POLISHED ROD: 1-1/2" x 22'
SUCKER RODS: 4-1 1/2" weight bars; 20-3/4" guided rods; 77-3/4" plain rods, 100-3/4" guided rods, 2-4', x 3/4" pony subs.
PUMP SIZE: 2-1/2" x 1-1/2" x 12' x 14 ½' RHAC
STROKE LENGTH: 56"
PUMP SPEED, SPM: 4.5 SPM

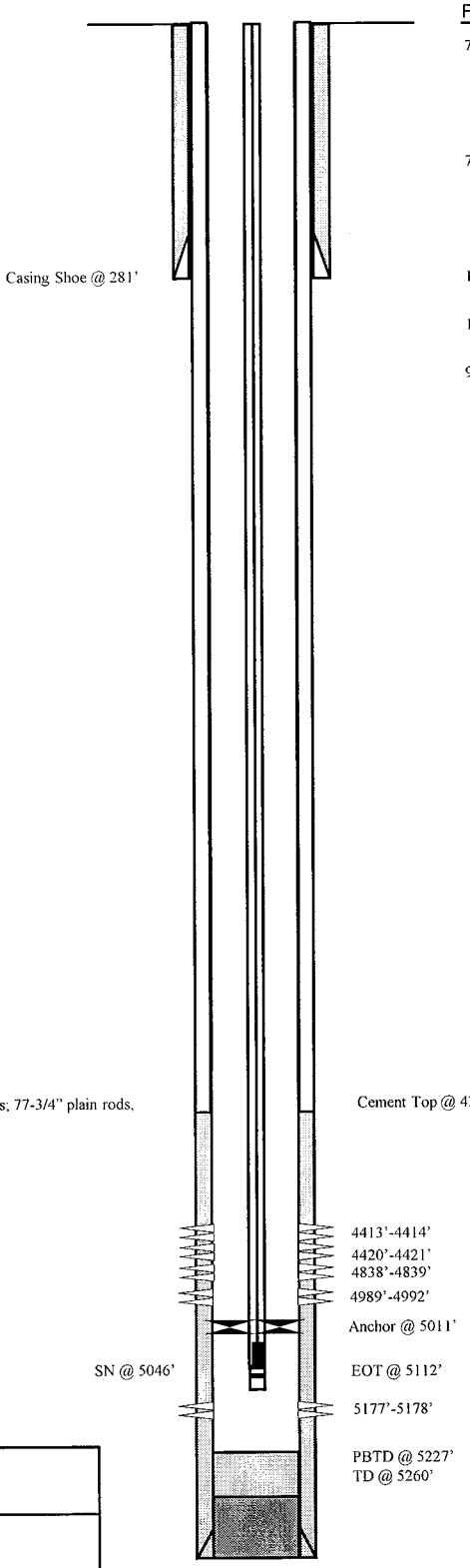

FRAC JOB

7/12/65	4413'-5178'	**Frac zone as follows:** 50,000# 20/40 sand + 4000# 8/12 glass beads in 1238 bbls 2% KCl wtr. Treated @ avg press of 2650 psi w/avg rate of 48.5 BPM. ISIP 2000 psi.
7/13/84	4989'-4992'	**Frac zone as follows:** 55,000# 20/40 sand in 464 bbls 2% KCl wtr. Tubing burst when final stage screened out on perfs. Approx. 34,000# sand in perfs.
12/7/05		Pump change. Update rod and tubing details.
12/13/05		Pump change. Update rod and tubing details.
9-17-07		Pump change. Updated rod & tubing details.

PERFORATION RECORD

7/11/65	5177'-5178'	4 SPF	04 holes
7/11/65	4838'-4839'	4 SPF	04 holes
7/11/65	4420'-4421'	4 SPF	04 holes
7/11/65	4413'-4414'	4 SPF	04 holes
7/13/84	4989'-4992'	4 SPF	16 holes

NEWFIELD

C&O Govt. #2

1980' FSL & 2080' FEL

NWSE Section 12-T9S-R16E

Duchesne Co, Utah

API #43-013-15112; Lease #UTU-035521

DF 10/22/07

Attachment E-6

C & O Govt. 4-12-9-16

Spud Date: 4/14/83
Put on Production: 6/02/83
Put on Injection: 10/27/94

GL: 5450' KB: 5462'

Initial Production: 110 BOPD, 60 MCFD, 0 BWPD

SURFACE CASING

CSG SIZE: 8-5/8"
GRADE: J-55
WEIGHT: 24#
LENGTH: 7 jts.
DEPTH LANDED: 292'
HOLE SIZE: 12-1/4"
CEMENT DATA: 241 cu ft. Class "G" cement

PRODUCTION CASING

CSG SIZE: 5-1/2"
GRADE: J-55
WEIGHT: 15.5#
LENGTH: 135 jts.
DEPTH LANDED: 5345'
HOLE SIZE: 7-7/8"
CEMENT DATA: 633 cu ft Hilift slurry + 338 cu ft. RFC slurry
CEMENT TOP AT: ? per CBL

TUBING

SIZE/GRADE/WT: 2-7/8" / J-55 / 6.5#
NO. OF JOINTS: 128 jts (4021.48')
SEATING NIPPLE: 2-7/8" (1.10')
SN LANDED AT: 4035.18' KB
PACKER: 4041.38'
SIZE/GRADE/WT: 2-3/8" / J-55 / 4.5#
NO. OF JOINTS: 20 jts (635.06')
PACKER: 4683.24'
SEATING NIPPLE: 2-3/8" (1.10')
SN LANDED AT: 4684.34' KB
TOTAL STRING LENGTH: EOT @ 4684.34'

Injection Wellbore Diagram

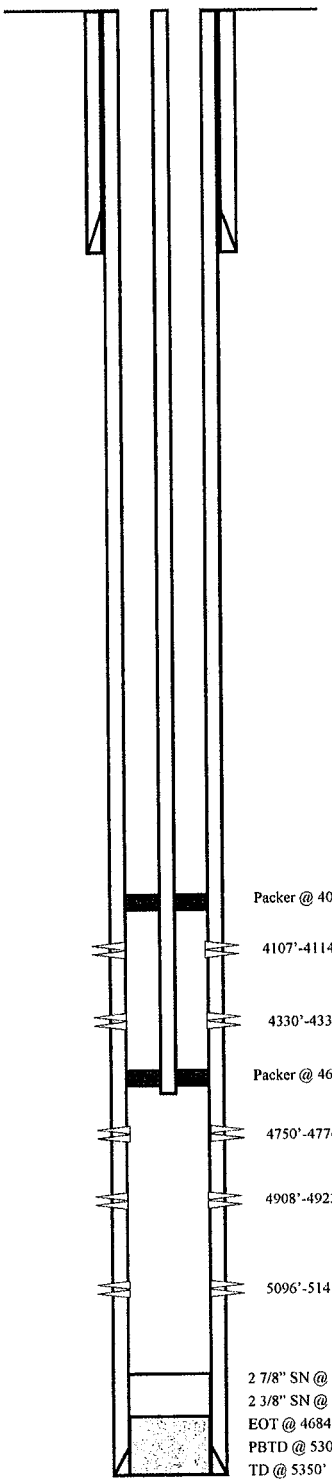

FRAC JOB

5/14/83	5096'-5138'	**Frac zone as follows:** 68,000# 20/40 sand in 393 bbls frac fluid. Treated @ avg press of 1625 psi w/avg rate of 20 BPM. Screened out.
5/18/83	4908'-4923'	**Frac zone as follows:** 37,000# 20/40 sand + 6,000# 10/20 sand in 568 bbls frac fluid. Treated @ avg press of 2180 psi w/avg rate of 20 BPM. Calc. flush: 4908 gal. Actual flush: 4870 gal.
5/22/83	4750'-4774'	**Frac zone as follows:** 55,000# 20/40 sand in 672 bbls frac fluid. Treated @ avg press of 1600 psi w/avg rate of 21 BPM. Calc. flush: 4750 gal. Actual flush: 4748 gal.
5/24/83	4107'-4337'	**Frac zone as follows:** 55,000# 20/40 sand in 526 bbls frac fluid. Treated @ avg press of 1880 psi w/avg rate of 24 BPM. Calc. flush: 4107 gal. Actual flush: 4100 gal.
10/27/94		**Convert to injector. Update tbg details.**
04-08-10		**5 Yr MIT**

PERFORATION RECORD

5/13/83	5096'-5141'	18 holes
5/17/83	4908'-4923'	22 holes
5/21/83	4750'-4774'	24 holes
5/23/83	4330'-4337'	08 holes
5/23/83	4107'-4114'	08 holes

NEWFIELD

C & O Govt. 4-12-9-16
2140' FSL & 1820' FWL
NESW Section 12-T9S-R16E
Duchesne Co, Utah
API #43-013-30742; Lease #U-035521

LCN 04-12-10

ATTACHMENT E-7

Federal 5-13-9-16

Spud Date:09/22/05
Put on Production: 11/08/05
GL: 5538' KB: 5550'

Wellbore Diagram

Initial Production: BOPD, MCFD, BWPD

SURFACE CASING

CSG SIZE: 8-5/8"
GRADE: J-55
WEIGHT: 24#
LENGTH: 7 jts. (301.7')
DEPTH LANDED: 312.6' KB
HOLE SIZE: 12-1/4"
CEMENT DATA: 160 sxs Class "G" cmt, est 4 bbls cmt to surf.

PRODUCTION CASING

CSG SIZE: 5-1/2"
GRADE: J-55
WEIGHT: 15.5#
LENGTH: 135 jts. (5802.05')
DEPTH LANDED: 5801.3' KB
HOLE SIZE: 7-7/8"
CEMENT DATA: 300 sxs Prem. Lite II mixed & 450 sxs 50/50 POZ.
CEMENT TOP: 100'

TUBING

SIZE/GRADE/WT.: 2-7/8" / J-55 / 6.5#
NO. OF JOINTS: 166jts (5388.00')
TUBING ANCHOR: 5400.0' KB
NO. OF JOINTS: 1 jts (31.4')
SEATING NIPPLE: 2-7/8" (1.10')
SN LANDED AT: 5434.2' KB
NO. OF JOINTS: 2 jts (65.1')
TOTAL STRING LENGTH: EOT @ 5502' KB

SUCKER RODS

POLISHED ROD: 1-1/2" x 22' SM
SUCKER RODS: 1-4' x ¾" pony rod, 100-3/4" scrapered rods, 100-3/4" plain rods, 10-3/4" scrapered rods, 6- 1" stabilizer bars, 6-1 ½" weight rods.
PUMP SIZE: 2-1/2" x 1- ¼ " x 18 x 5' x 14'' RHAC w/SM plunger
STROKE LENGTH: 86"
PUMP SPEED,5 SPM:

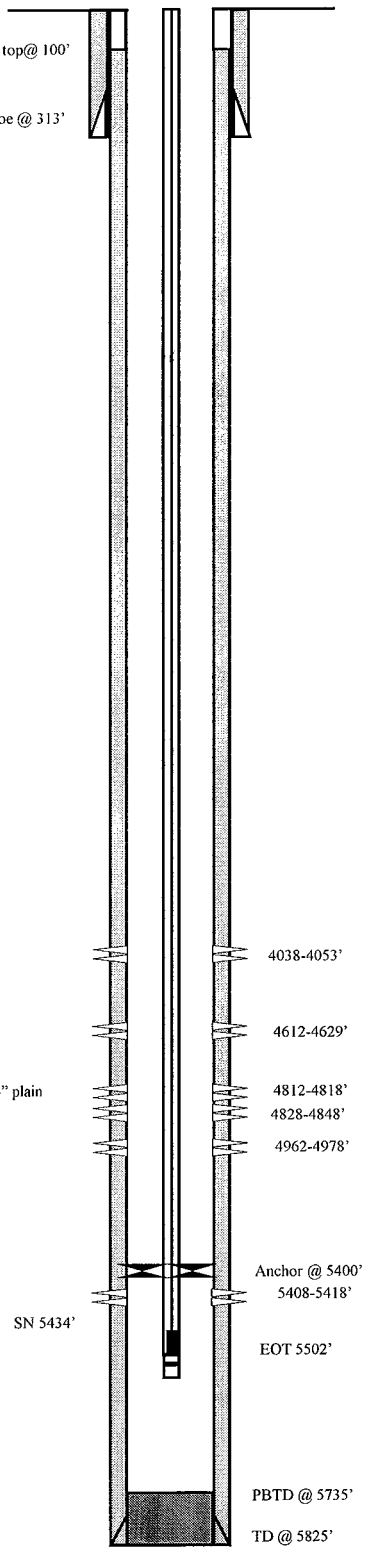

FRAC JOB

11/01/05	5408-5418'	**Frac CP1 sands as follows:** 34070# 20/40 sand in 392 bbls Lightning 17 frac fluid. Treated @ avg press of 1933 psi w/avg rate of 24.7 BPM. ISIP 2200 psi. Calc flush: 5406 gal. Actual flush: 5124 gal.
11/01/05	4962-4978'	**FracA1 sands as follows:** 89150# 20/40 sand in 655 bbls Lightning 17 frac fluid. Treated @ avg press of 1591 psi w/avg rate of 24.7 BPM. ISIP 2100 psi. Calc flush: 4960 gal. Actual flush: 4746 gal.
11/04/05	4812-4848'	**Frac B1, B2 sands as follows:** 158872# 20/40 sand in 1078 bbls Lightning17 frac fluid. Treated @ avg press of 1550 psi w/avg rate of 24.7 BPM. ISIP 2000 psi. Calc flush: 4810 gal. Actual flush: 4582 gal.
11/02/05	4612-4629'	**Frac D2 sands as follows:** 29350# 20/40 sand in 344 bbls Lightning 17 frac fluid. Treated @ avg press of 1762 psi w/avg rate of 24.8 BPM. ISIP 2000 psi. Calc flush: 4610 gal. Actual flush: 4326 gal.
11/02/05	4038-4053'	**Frac GB6 sands as follows:** 83194# 20/40 sand in 585 bbls Lightning 17 frac fluid. Treated @ avg press of 1388 psi w/avg rate of 24.7 BPM. ISIP 1900 psi. Calc flush: 4036 gal. Actual flush: 3944 gal.
9/16/09		Pump Change. Updated rod & tubing details.
2/23/12		Tubing Leak: Updated rod & tubing detail

PERFORATION RECORD

11/01/05	5408-5418'	4 JSPF	40 holes
11/01/05	4962-4978'	4 JSPF	64 holes
11/01/05	4828-4848'	4 JSPF	80 holes
11/01/05	4812-4818'	4 JSPF	24 holes
11/02/05	4612-4629'	4 JSPF	68 holes
11/02/05	4038-4053'	4 JSPF	60 holes

NEWFIELD

Federal 5-13-9-16

1981' FNL & 820' FWL

SW/NW Section 13-T9S-R16E

Duchesne Co, Utah

API #43-013-32658; Lease #UTU-64805

DF 11/2/09
Updated HC 2/23/12

Attachment E-8

Federal 6-13-9-16

Wellbore Diagram

P & A

Spud Date: 9/26/2005
Put on Production:
GL: 5514' KB: 5526'

SURFACE CASING

CSG SIZE 8-5/8"
GRADE J-55
WEIGHT 24#
LENGTH 7 jts (303.52')
DEPTH LANDED 313.52'
HOLE SIZE 12-1/4"
CEMENT DATA 160 sxs Class "G" cmt, circ. 5.5 bbls to surf

PRODUCTION CASING

CSG SIZE 5-1/2"
GRADE J-55
WEIGHT 15.5#
LENGTH 132 jts. (5815.38')
DEPTH LANDED 5813.38'
HOLE SIZE 7-7/8"
CEMENT DATA 300 sxs Prem. Lite II & 450 sxs 50/50 POZ. 9 bbls to surf
CEMENT TOP AT No CBL run

TUBING

SIZE/GRADE/WT 2-7/8" / J-55 / 6.5#
NO. OF JOINTS jts (')
TUBING ANCHOR
NO. OF JOINTS 1 jts (')
SEATING NIPPLE 2-7/8" (1.1')
SN LANDED AT
NO. OF JOINTS jts (')
TOTAL STRING LENGTH EOT @

SUCKER RODS

POLISHED ROD
SUCKER RODS
PUMP SIZE
STROKE LENGTH
PUMP SPEED, SPM

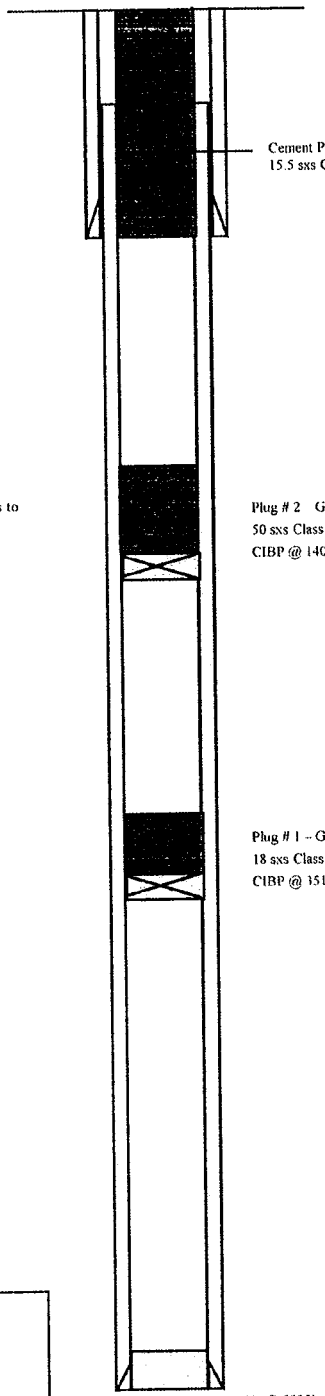

FRAC JOB

03-2006	
09/19/12	Operations Suspended P&A - CIBP @ 3510' TOC @ 3355', CIBP @ 1400' TOC @ 1168, 15.5 sacks Class G cement down both casings to surface. Stoney Anderton w/ BLM witnessed the P&A. Weld plate, back fill hole, dig up deadmen & cut off 3' below ground level. South Slope Reclamation to do dirt work

PERFORATION RECORD

NEWFIELD

Federal 6-13-9-16
1794' FNL & 1960' FWL (SE/NW)
Section 13, T9S, R16E
Duchesne Co, Utah
API # 43-013-32657; Lease # UTU-64805

LCN 10/01/12

ATTACHMENT E-9

Federal #21-13Y-9-16

Spud Date: 8/13/1993
Put on Production: 9/16/1993
GL: 5535' KB: 5545'

Wellbore Diagram

Initial Production: 84 BOPD, 126 MCFD, 7 BWPD

SURFACE CASING

CSG SIZE: 8-5/8"
GRADE: J-55
WEIGHT: 24#
LENGTH: 6 jts. (275')
HOLE SIZE:12-1/4"
CEMENT DATA: 150 sxs Premium Plus cement, est 6 bbls cmt to surf.

PRODUCTION CASING

CSG SIZE: 5-1/2"
GRADE: K-55
WEIGHT: 15.5#
LENGTH: 139 jts. (5945.72')
DEPTH LANDED: 5940.72'
HOLE SIZE: 7-7/8"
CEMENT DATA: 145 sxs Hilift cement & 325 sxs Class "G".
CEMENT TOP AT: 1040' per CBL

TUBING

SIZE/GRADE/WT.: 2-7/8" / J-55 / 6.5#
NO. OF JOINTS: 163 jts (5043.8')
TUBING ANCHOR: 5057'
NO. OF JOINTS: 2 jt (62.9')
SEATING NIPPLE: 5119.4'
NO. OF JOINTS: 2 jt (61.5')
TOTAL STRING LENGTH: EOT @ 5182' KB

SUCKER RODS

POLISHED ROD: 1-1/4" x 26' SM
SUCKER RODS: 6-1 1/2" sinker bars; 98-3/4" guided rods; 100-3/4" guided, 1-2' x 7/8" pony rods.
PUMP SIZE: 2-1/2" x 1-1/2" x 20' RHAC
STROKE LENGTH: 64"
PUMP SPEED, SPM: 4 SPM
LOGS: DIGL/SP/GR/CAL

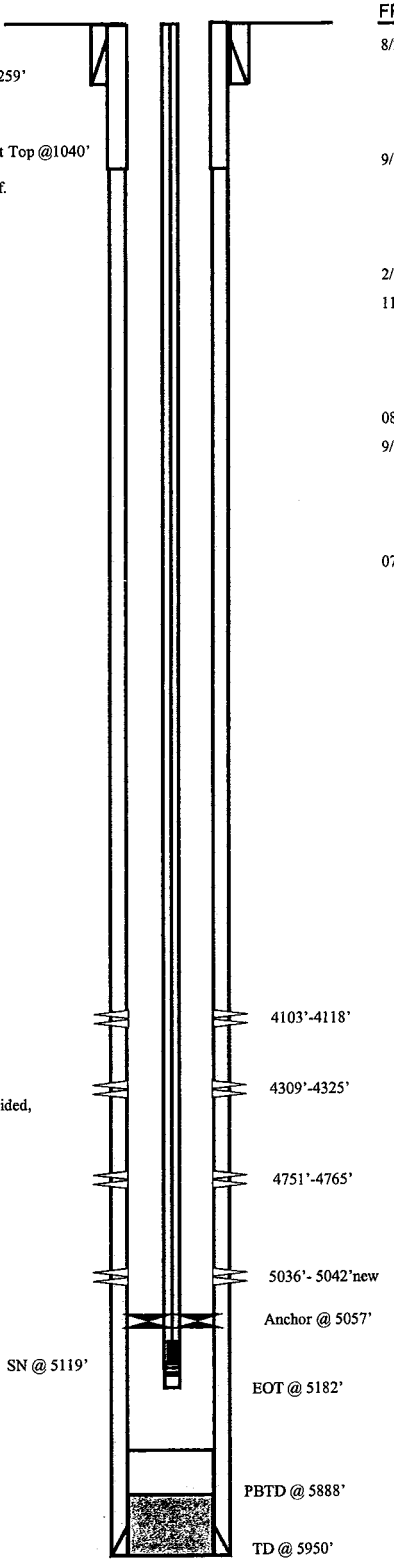

FRAC JOB

8/28/93	4751'-4765'	**Frac as follows:** 20,140# 20/40 sand & 15,380# 16/30 sand in 371 bbls gelled KCL frac fluid. Treated @ avg press of 1900 psi w/avg rate of 20 BPM. ISIP 1850 psi.
9/1/93	4309'-4325'	**Frac as follows:** 33,600# 16/30 sand in 377 bbls gelled KCL frac fluid. Treated @ avg press of 2050 psi w/avg. rate of 24.5 BPM. ISIP 1800 psi.
2/14/01		Tubing job. Update Rod and tubing details.
11/17/05	4103-4118	**Frac GB6 sds as follows:** 55,211# 20/40 sand in 439 bbls of Lightning 17 frac fluid. Treated @ ave pressure of 1870 w/ ave rate of 25.2 bpm w/ 8 ppg of sand. ISIP was 2150. Actual flush: 4032 gals
08/29/08		Recompletion. Rod & Tubing detail updated.
9/3/08	5036-5042	**Frac A1 sds as follows:** 16,591# 20/40 sand in 238 bbls of Lightning 17 fluid. Treated w/ ave pressure of 3442 psi @ ave rate of 13.1BPM. ISIP 1962 psi. Actual flush: 1218 gals.
07/25/10		Tubing Leak. Rod & Tubing detail updated.

PERFORATION RECORD

8/26/93	4751'-4765'	2 JSPF	28 holes
8/31/93	4309'-4325'	2 JSPF	32 holes
11/17/05	4103-4118'	40 JSPF	60 holes
9/3/08	5036-5042'	4 JSPF	24 holes new

NEWFIELD

Federal #21-13Y-9-16
702' FNL & 1830' FWL
NENW Section 13-T9S-R16E
Duchesne Co, Utah
API #43-013-31400; Lease #UTU-64805

TW 09/21/10

ATTACHMENT E-10

Federal 2-13-9-16

Spud Date: 10-13-05
Put on Production: 11-30-05

Wellbore Diagram

Initial Production: BOPD, MCFD, BWPD

GL: 5472' KB: 5484'

SURFACE CASING

CSG SIZE: 8-5/8"
GRADE: J-55
WEIGHT: 24#
LENGTH: 7 jts (301.06')
DEPTH LANDED: 312.91' KB
HOLE SIZE: 12-1/4"
CEMENT DATA: 160 sxs Class "G" cmt, est 7 bbls cmt to surf.

Cement top @ 60'

PRODUCTION CASING

CSG SIZE: 5-1/2"
GRADE: J-55
WEIGHT: 15.5#
LENGTH: 139 jts. (5815.48')
DEPTH LANDED: 5828.73' KB
HOLE SIZE: 7-7/8"
CEMENT DATA: 350 sxs Prem. Lite II mixed & 475 sxs 50/50 POZ.
CEMENT TOP AT: 60'

TUBING

SIZE/GRADE/WT.: 2-7/8" / J-55
NO. OF JOINTS: 155 jts (4930.08')
TUBING ANCHOR: 4940.08'
NO. OF JOINTS: 1 jts (31.54')
SEATING NIPPLE: 2-7/8" (1.10')
SN LANDED AT: 4974.42'
NO. OF JOINTS: 2 jts (62.53')
TOTAL STRING LENGTH: EOT @ 5038.50'

SUCKER RODS

POLISHED ROD: 1-1/2" x 22' SM
SUCKER RODS: 1-6' & 1-2' X ¾" pony rods, 99- ¾" scrapered rods, 63- ¾" plain rods, 30- ¾" scrapered rods, 6-1 ½" weight rods.
PUMP SIZE: 2-1/2" x 1-1/2" x 14 ½' RHAC w/SM plunger
STROKE LENGTH: 86"
PUMP SPEED, SPM: 5 SPM

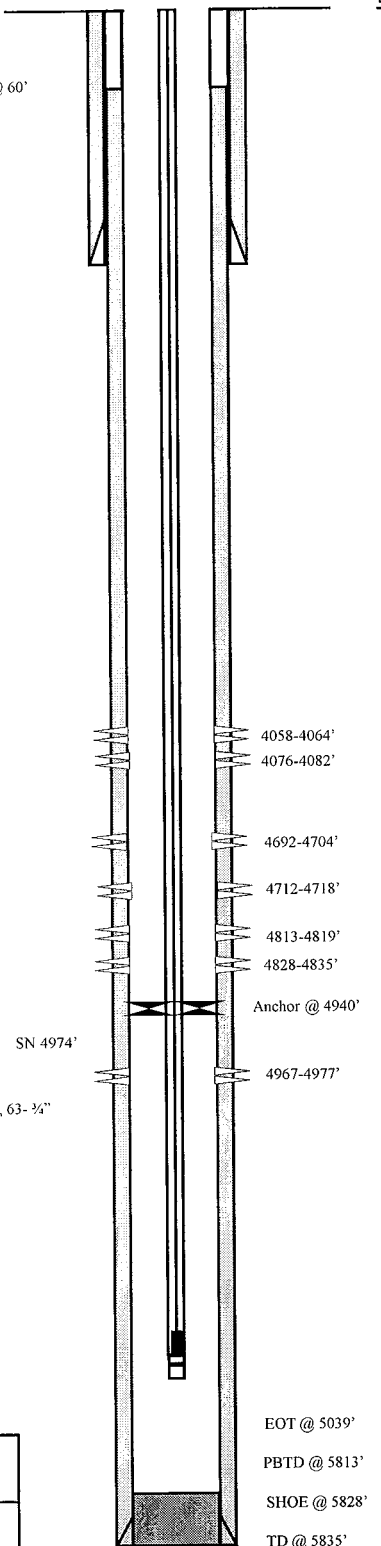

FRAC JOB

11-21-05	4967-4977'	**Frac A1 sands as follows:** 24275# 20/40 sand in 313 bbls Lightning 17 frac fluid. Treated @ avg press of 1933 psi w/avg rate of 24.7 BPM. ISIP 2000 psi. Calc flush: 4965 gal. Actual flush: 4691 gal.
11-21-05	4813-4835'	**Frac B1 sands as follows:** 59177# 20/40 sand in 474 bbls Lightning 17 frac fluid. Treated @ avg press of 1679 psi w/avg rate of 24.7 BPM. ISIP 2250 psi. Calc flush: 4811 gal. Actual flush: 4599 gal.
11-22-05	4692-4718'	**Frac C sands as follows:** 59763# 20/40 sand in 470 bbls Lightning 17 frac fluid. Treated @ avg press of 1550 psi w/avg rate of 24.7 BPM. ISIP 2000 psi. Calc flush: 4690 gal. Actual flush: 4032 gal.
11-22-05	4058-4082'	**Frac GB6 sands as follows:** 31561# 20/40 sand in 335 bbls Lightning 17 frac fluid. Treated @ avg press of 1827 w/ avg rate of 24.7 BPM. ISIP 1800 psi. Calc flush: 4056 gal. Actual flush: 3948 gal.
11-30-07		Tubing Leak. Updated rod & tubing details.

PERFORATION RECORD

11-14-05	4967-4977'	4 JSPF	40 holes
11-21-05	4828-4835'	4 JSPF	28 holes
11-21-05	4813-4819'	4 JSPF	24 holes
11-22-05	4712-4718'	4 JSPF	24 holes
11-22-05	4692-4704'	4 JSPF	48 holes
11-22-05	4076-4082'	4 JSPF	24 holes
11-22-05	4058-4064'	4 JSPF	24 holes

NEWFIELD

Federal 2-13-9-16

626' FNL & 1847' FEL

NW/NE Section 13-T9S-R16E

Duchesne Co, Utah

API #43-013-32659; Lease #UTU-64805

DF 1/21/08

Attachment E-11

Jonah Federal T-11-9-16

Spud Date: 09/25/2009
Put on Production: 11/02/2009

GL: 5503' KB: 5515'

SURFACE CASING

CSG SIZE: 8-5/8"
GRADE: J-55
WEIGHT: 24#
LENGTH: 7 jts. (307.66')
DEPTH LANDED: 319.51'
HOLE SIZE: 12-1/4"
CEMENT DATA: 160 sxs Class "G" cmt

PRODUCTION CASING

CSG SIZE: 5-1/2"
GRADE: J-55
WEIGHT: 15.5#
LENGTH: 135 jts. (6014.88') Includes Shoe Jt (20.0')
HOLE SIZE: 7-7/8"
DEPTH LANDED: 6028.13'
CEMENT DATA: 250 sxs Prem. Lite II mixed & 400 sxs 50/50 POZ.
CEMENT TOP AT: 62'

TUBING

SIZE/GRADE/WT.: 2-7/8" / J-55 / 6.5#
NO. OF JOINTS: 179 jts (5700')
TUBING ANCHOR: 5712'
NO. OF JOINTS: 1 jts (31.5')
SEATING NIPPLE: 2-7/8" (1.1')
SN LANDED AT: 5746.3' KB
NO. OF JOINTS: 2 jts (61.5')
TOTAL STRING LENGTH: EOT @ 5809'

SUCKER RODS

POLISHED ROD: 1-1/2" x 30'
SUCKER RODS: 1 - 2' x 7/8", 1 - 8' x 7/8" pony rods, 207 - 7/8" 8per guided rods, 4 - 1 ½" weight bars
PUMP SIZE: 2 ½ x 1 ¼ x 17' x 24' RHAC
STROKE LENGTH: 144
PUMP SPEED: SPM 6

Wellbore Diagram

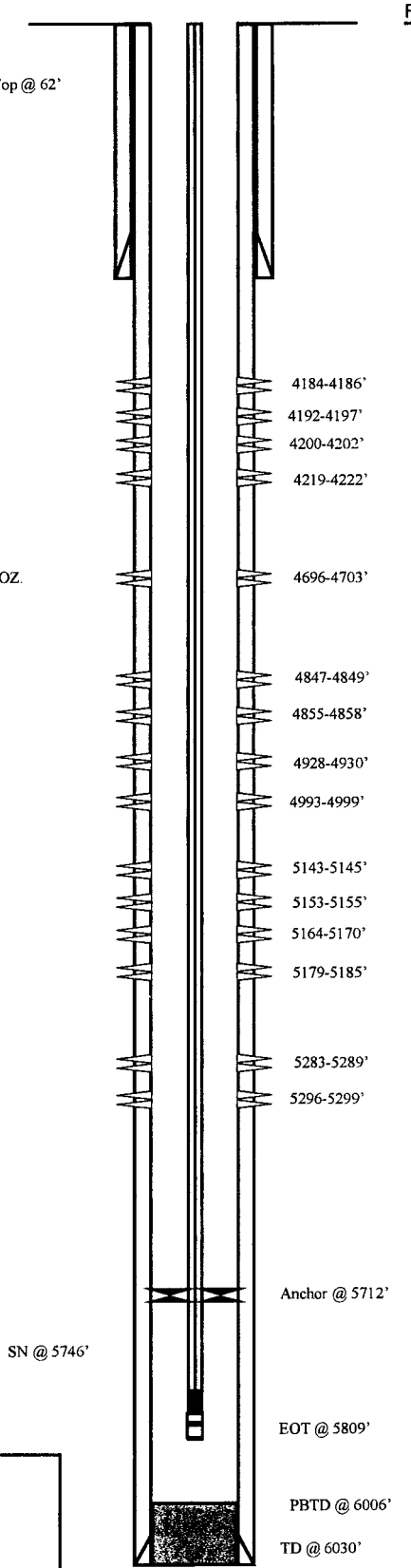

FRAC JOB

11-03-09	5283-5299'	**Frac LODC sands as follows:** Frac with 16631# 20/40 sand in 106 bbls Lightning 17 fluid.
11-03-09	5143-5185'	**Frac A1 & A3 sands as follows:** Frac with 90329# 20/40 sand in 544 bbls Lightning 17 fluid.
11-03-09	4847-4999'	**Frac B2, C & B.5 sands as follows:** Frac with 60136# 20/40 sand in 370 bbls Lightning 17 fluid.
11-03-09	4696-4703'	**Frac D1 sands as follows:** Frac with 14128# 20/40 sand in 124 bbls Lightning 17 fluid.
11-03-09	4184-4222'	**Frac GB6 sands as follows:** Frac with 27979# 20/40 sand in 223 bbls Lightning 17 fluid.

PERFORATION RECORD

5296-5299'	3 JSPF	holes
5283-5289'	3 JSPF	holes
5179-5185'	3 JSPF	holes
5164-5170'	3 JSPF	holes
5153-5155'	3 JSPF	holes
5143-5145'	3 JSPF	holes
4993-4999'	3 JSPF	holes
4928-4930'	3 JSPF	holes
4855-4858'	3 JSPF	holes
4847-4849'	3 JSPF	holes
4696-4703'	3 JSPF	holes
4219-4222'	3 JSPF	holes
4200-4202'	3 JSPF	holes
4192-4197'	3 JSPF	holes
4184-4186'	3 JSPF	holes

NEWFIELD

Jonah Federal T-11-9-16
709' FSL & 725' FEL
Section 11, T9S, R16E
Duchesne Co, Utah
API # 43-013-34080; Lease # UTU-096550

ATTACHMENT E-12

Jonah Federal 16-12-9-16

Spud Date: 9/2/03
Put on Production: 7/22/04
GL: 5423' KB: 5435'

Injection Wellbore Diagram

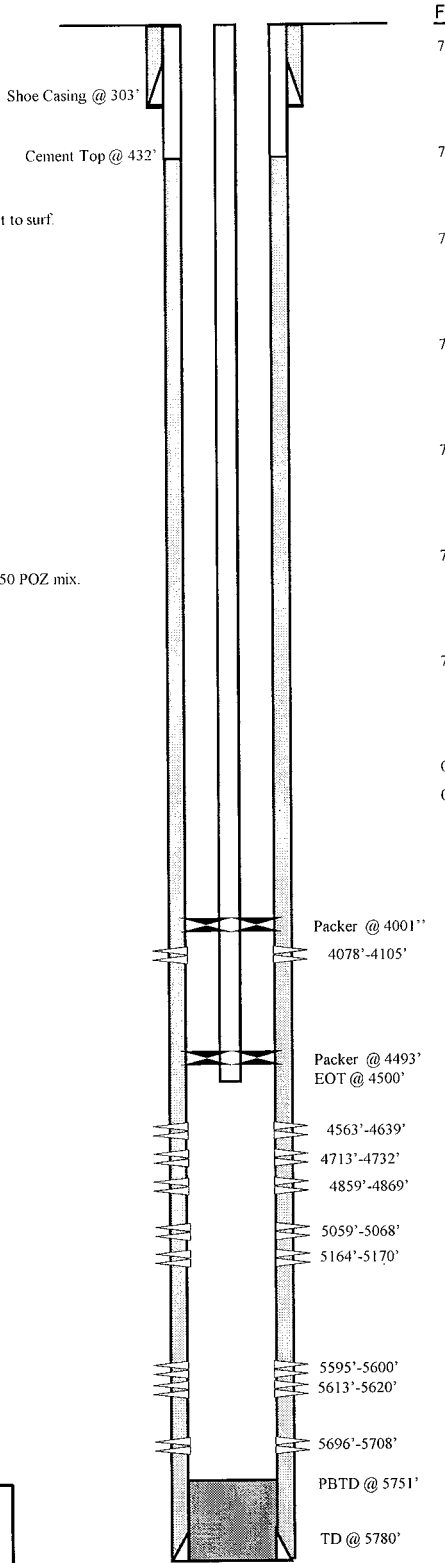

SURFACE CASING

CSG SIZE: 8-5/8"
GRADE: J-55
WEIGHT: 24#
LENGTH: 7 jts. (293.13')
DEPTH LANDED: 303.13' KB
HOLE SIZE:12-1/4"
CEMENT DATA: 150sxs Class "G" cmt mixed, est 4 bbls cmt to surf.

PRODUCTION CASING

CSG SIZE: 5-1/2"
GRADE: J-55
WEIGHT: 15.5#
LENGTH: 136 jts. (5777.44')
DEPTH LANDED: 5775.44' KB
HOLE SIZE: 7-7/8"
CEMENT DATA: 300 sxs Prem. Lite II mixed & 400 sxs 50/50 POZ mix.
CEMENT TOP AT: 432'

TUBING

SIZE/GRADE/WT.: 2-7/8" / J-55 / 6.5#
NO. OF JOINTS including Tubing Pup: 126 jts (3983.9')
CE @ 4001'
NO. OF JOINTS: 15 jts (487.7')
XO: 2-7/8" x 2-3/8" / N-80 / 6.5#
SEATING NIPPLE: 2-3/8" N-80 (1.10')
SN LANDED AT: 4492.9' KB
XO: 2-7/8" x 2-3/8" / N-80 / 6.5#
STINGER w/ 4"x1' SEAL: @ 4494.6'
CE @ 4493.5'
TOTAL STRING LENGTH: EOT @ 4500' W/12' KB

FRAC JOB

7/15/04	5595'-5708'	**Frac CP sands as follows:** 60,657# 20/40 sand in 489 bbls lightning Frac 17 fluid. Treated @ avg press of 1500 psi w/avg rate of 24.7 BPM. ISIP 1800 psi. Calc flush: 5593 gal. Actual flush: 5590 gal.
7/16/04	5164'-5170'	**Frac LODC sands as follows:** 24,253# 20/40 sand in 259 bbls lightning Frac 17 fluid. Treated @ avg press of 2680 psi w/avg rate of 24.6 BPM. Screened out.
7/19/04	5059'- 5068'	**Frac A3 sands as follows:** 49,173# 20/40 sand in 419 bbls lightning Frac 17 fluid. Treated @ avg press of 1790 psi w/avg rate of 24.7 BPM. ISIP 2050 psi. Calc flush: 5057 gal. Actual flush: 5057 gal.
7/19/04	4859'- 4869'	**Frac B2 sands as follows:** 59,382# 20/40 sand in 469 bbls lightning Frac 17 fluid. Treated @ avg press of 2122 psi w/avg rate of 24.7 BPM. ISIP 2570 psi. Calc flush: 4857 gal. Actual flush: 4855 gal.
7/19/04	4713'- 4732'	**Frac C sands as follows:** 60,016# 20/40 sand in 458 bbls lightning Frac 17 fluid. Treated @ avg press of 1894 psi w/avg rate of 24.7 BPM. ISIP 2220 psi. Calc flush: 4711 gal. Actual flush: 4757 gal.
7/19/04	4563'- 4639'	**Frac D sands as follows:** 89,343# 20/40 sand in 651 bbls lightning Frac 17 fluid. Treated @ avg press of 1813 psi w/avg rate of 24.7 BPM. ISIP 2075 psi. Calc flush: 4561 gal. Actual flush: 4561 gal.
7/19/04	4078'- 4105'	**Frac GB6 sands as follows:** 80,167# 20/40 sand in 566 bbls lightning Frac 17 fluid. Treated @ avg press of 1532 psi w/avg rate of 24.7 BPM. ISIP 1950 psi. Calc flush: 4077 gal. Actual flush: 3990 gal.
05/10/11		**Convert to Injection well**
05/18/11		**Conversion MIT Finalized** – updated tbg detail

PERFORATION RECORD

7/13/04	5696'-5708'	4 JSPF	48 holes
7/13/04	5613'-5620'	4 JSPF	28 holes
7/13/04	5595'-5600'	4 JSPF	20 holes
7/15/04	5164'-5170'	4 JSPF	24 holes
7/19/04	5059'-5068'	4 JSPF	36 holes
7/19/04	4859'-4869'	4 JSPF	40 holes
7/19/04	4713'-4732'	4 JSPF	76 holes
7/19/04	4635'-4639'	4 JSPF	16 holes
7/19/04	4612'-4617'	4 JSPF	20 holes
7/19/04	4563'-4573'	4 JSPF	40 holes
7/19/04	4099'-4105'	4 JSPF	24 holes
7/19/04	4078'-4096'	4 JSPF	72 holes

NEWFIELD

Jonah Federal 16-12-9-16
858' FSL & 859' FEL
SE/SE Section 12-T9S-R16E
Duchesne Co, Utah
API #43-013-32431; Lease #UTU-035521

LCN 05-19-11

ATTACHMENT E-13

Jonah Federal 15-12-9-16

Spud Date: 10-08-05
Put on Production: 11-11-05
GL: 5499' KB: 5511'

Initial Production: BOPD, MCFD, BWPD

SURFACE CASING

CSG SIZE: 8-5/8"
GRADE: J-55
WEIGHT: 24#
LENGTH: 7 jts (296.84')
DEPTH LANDED: 308.69' KB
HOLE SIZE:12-1/4"
CEMENT DATA: 160 sxs Class "G" cmt, est 6.5 bbls cmt to surf.

PRODUCTION CASING

CSG SIZE: 5-1/2"
GRADE: J-55
WEIGHT: 15.5#
LENGTH: 136 jts. (5906.75')
DEPTH LANDED: 5920' KB
HOLE SIZE: 7-7/8"
CEMENT DATA: 350 sxs Prem. Lite II mixed & 475 sxs 50/50 POZ.
CEMENT TOP AT: 130'

TUBING

SIZE/GRADE/WT.: 2-7/8" / J-55 / 6.5#
NO. OF JOINTS: 121 jts (4032.45')
SEATING NIPPLE: 2-7/8" (1.10')
SN LANDED AT: 4044.45' KB
TOTAL STRING LENGTH: EOT @ 4053.00' KB

Injection Wellbore Diagram

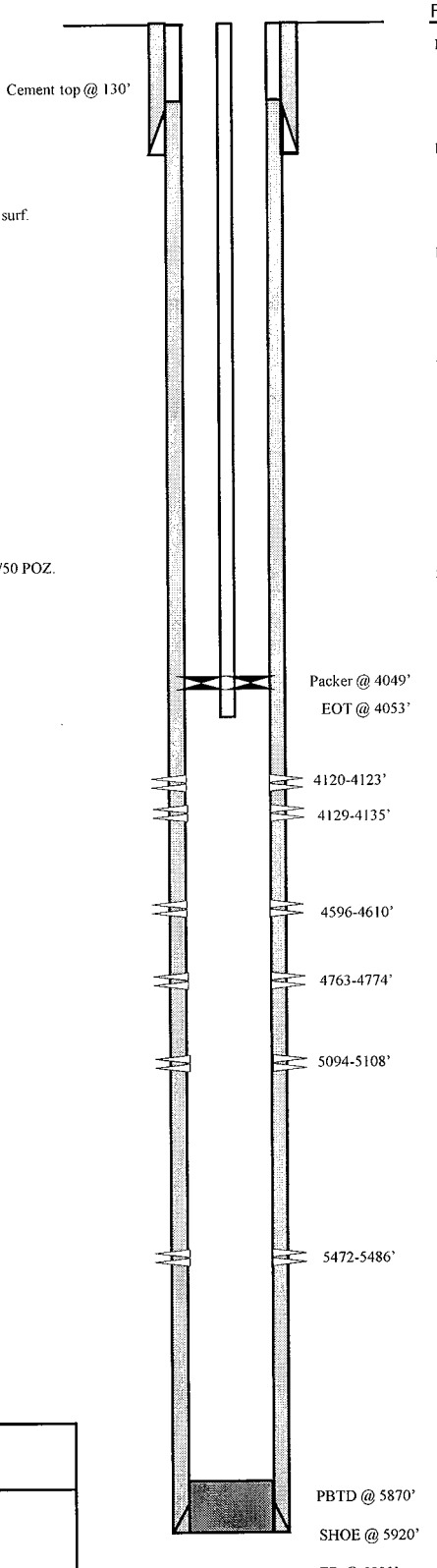

FRAC JOB

11-07-05	5472-5486'	**Frac CP1, sands as follows:** 59446# 20/40 sand in 585 bbls Lightning 17 frac fluid. Treated @ avg press of 1739 psi w/avg rate of 24.9 BPM. ISIP 1970 psi. Calc flush: 5470 gal. Actual flush: 5048 gal.
11-07-05	5094-5108'	**Frac A3, sands as follows:** 80231# 20/40 sand in 602 bbls Lightning 17 frac fluid. Treated @ avg press of 1586 psi w/avg rate of 24.8 BPM. ISIP 1990 psi. Calc flush: 5092 gal. Actual flush: 4704 gal.
11-07-05	4763-4774'	**Frac C sands as follows:** 29525# 20/40 sand in 350 bbls Lightning 17 frac fluid. Treated @ avg press of 1861 psi w/avg rate of 24.7 BPM. ISIP 2080 psi. Calc flush: 4761 gal. Actual flush: 4473 gal.
11-08-05	4596-4610'	**Frac D1 sands as follows:** 80686# 20/40 sand in 590 bbls Lightning 17 frac fluid. Treated @ avg press of 1924 w/ avg rate of 25 BPM. ISIP 2220 psi. Calc flush: 4594 gal. Actual flush: 3990 gal.
11-08-05	4120-4135'	**Frac GB6 sands as follows:** 31631# 20/40 sand in 341 bbls Lightning 17 frac fluid. Treated @ avg press of 1738 w/ avg rate of 24.9 BPM. ISIP 2030 psi. Calc flush: 4118 gal. Actual flush: 4032 gal.
5/1/07		**Well converted to an Injection well. MIT completed and submitted.**

PERFORATION RECORD

11-02-05	5472-5486'	4 JSPF	56 holes
11-07-05	5094-5108'	4 JSPF	56 holes
11-07-05	4763-4774'	4 JSPF	44 holes
11-08-05	4596-4610'	4 JSPF	56 holes
11-08-05	4129-4135'	4 JSPF	24 holes
11-08-05	4120-4123'	4 JSPF	12 holes

NEWFIELD

Jonah Federal 15-12-9-16

427' FSL & 2355' FEL
SW/SE Section 12-T9S-R16E
Duchesne Co, Utah
API #43-013-32627; Lease #UTU-35521

CR 5/21/07

Attachment E-14

Jonah O-12-9-16

Spud Date: 12-2-10
Put on Production:1-8-11
GL: 5548' KB:5560'

SURFACE CASING

CSG SIZE: 8-5/8"
GRADE: J-55
WEIGHT: 24#
LENGTH: 7jts. (301.18')
DEPTH LANDED: 313.03'
HOLE SIZE: 12-1/4"
CEMENT DATA: 160sxs Class "G" cmt

PRODUCTION CASING

CSG SIZE: 5-1/2"
GRADE: J-55
WEIGHT: 15.5#
LENGTH: 148jts.(6278.0') Includes Shoe Jt. (41.63')
HOLE SIZE: 7-7/8"
DEPTH LANDED: 6291.25'
CEMENT DATA: 300sxs Prem. Lite II mixed & 400sxs 50/50 POZ
CEMENT TOP AT:200'

TUBING

SIZE/GRADE/WT.: 2-7/8" / J-55 / 6.5#
NO. OF JOINTS: 185jts (5796.0')
TUBING ANCHOR: 5808.0'
NO. OF JOINTS: 1 jts (31.4')
SEATING NIPPLE: 2-7/8" (1.1')
SN LANDED: 5842.2' KB
NO. OF JOINTS: 2jts (62.8')
TOTAL STRING LENGTH: EOT @5907'

SUCKER RODS

POLISHED ROD: 1-1/2" x 30'
SUCKER RODS:1-2 x 7/8" pony rods, 1-4 x 7/8" pony rods, 1-8 x 7/8" pony rods, 1-8 x 7/8" pony rods, 227-x 7/8" 8 per guided rods, 4- 1 ½" weight bars
PUMP SIZE: 2 ½ x 1 ¾"' x 20"x 24" RHAC
STROKE LENGTH:144
PUMP SPEED: SPM 5

Wellbore Diagram

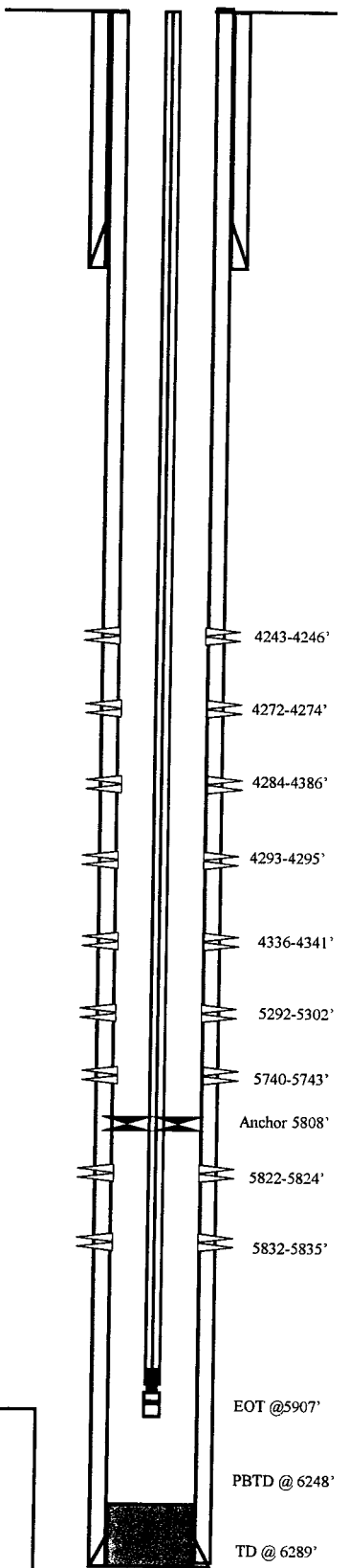

FRAC JOB

12-29-10	5740-5835'	**Frac CP2 & CP3 sands as follows:**Frac with 39638# 20/40 sand in 274bbls Lighting 17 fluid.
1-4-11	5292-5302'	**Frac A3 sands as follows:**Frac with 30535# 20/40 sand in 267bbls Lightning 17 fluid.
1-4-11	4243-4341'	**Frac GB6, GB4 & PB7 sands as follows:**Frac with 60639# 20/40 sand in 521bbls Lightning 17 fluid.

PERFORATION RECORD

5832-5835'	3 JSPF	9holes
5822-5824'	3 JSPF	6holes
5740-5743'	3 JSPF	9holes
5292-5302'	3 JSPF	30holes
4336-4341'	3 JSPF	15holes
4293-4295'	3 JSPF	6holes
4284-4286'	3 JSPF	6holes
4272-4274'	3 JSPF	6holes
4243-4246'	3 JSPF	9holes

NEWFIELD

Jonah O-12-9-16
SL: 1965'FNL & 645 'FWL (SW/NW)
Section 12, T9S, R16
Duchesne Co, Utah
API # 43-013-34142; Lease # USA UTU-096550

MB-2-18-11

ATTACHMENT E-15

Jonah #S-12-9-16

Spud Date: 10/15/08

Put on Prduction: 11/21/08

GL: 5426' KB: 5438'

Wellbore Diagram

SURFACE CASING

CSG SIZE: 8-5/8"

GRADE: J-55

WEIGHT: 24 #

LENGTH: 7 jts (316.09')

DEPTH LANDED: 326.09'

HOLE SIZE: 12-1/4"

CEMENT DATA: 160 sx class 'g' cmt

PRODUCTION CASING

CSG SIZE: 5-1/2"

GRADE: J-55

WEIGHT: 15.5#

LENGTH: 155 (6078')

DEPTH LANDED: 6076'

HOLE SIZE: 7-7/8"

CEMENT DATA: 350 sx premlite and 475 sx 50/50 poz

CEMENT TOP AT: 54'

TUBING

SIZE/GRADE/WT.: 6.5#, J-55

NO. OF JOINTS: 159 jts (4911.15')

TUBING ANCHOR: 4923.15'

NO. OF JOINTS: 1jts (31.00')

SN LANDED AT: 4956.95'

NO. OF JOINTS: 2 jts (62.27')

TOTAL STRING LENGTH: EOT @ 5020.72'

SUCKER RODS

POLISHED ROD: 1 ½" x 26'

SUCKER RODS: 1-8,1-6',1-4', 2-2 x 7/8" ponys, 193-7/8" guided rods (8 per), 4-1 ½" wt bars, 21,000# shear coupling

PUMP SIZE: 2 ½" x 1 ¾" x 20' RHAC 'CDI'

STROKE LENGTH: 122"

PUMP SPEED, SPM: 5

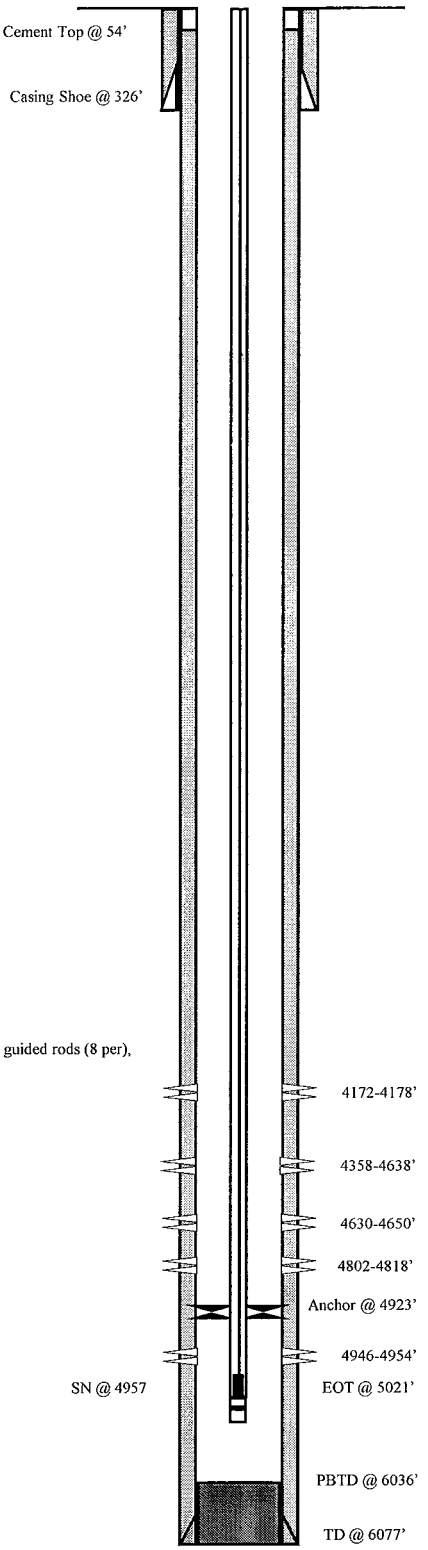

FRAC JOB

11/17/08 4946-4954' Frac B2 sds as follows:
34,213# 20/40 sand in 375 bbls of Lightning 17 fluid. Treated w/ ave pressure of 2150 psi @ ave rate of 23.2 BPM. ISIP 2275 psi. Actual flush: 4439 gals.

11/17/08 4802-4818' Frac C sds as follows:
55,806# 20/40 sand in 485 bbls of Lightning 17 fluid. Treated w/ ave pressure of 2218 psi w/ ave rate of 18.7 BPM. ISIP 2534 psi. Actual flush: 4297 gals.

11/17/08 4630-4650' Frac D1 sds as follows:
51,261# 20/40 sand in 447 bbls of Lightning 17 fluid. Treated w/ ave pressure of 2082 psi w/ ave rate of 18.7 BPM. ISIP 2237 psi. Actual flush: 4124 gals.

11/18/08 4358-4638' Frac PB10 sds as follows:
40,513# 20/40 sand in bbls of Lightning 17 fluid. Treated w/ ave pressure of 2099 psi @ ave rate of 23.2 BPM. ISIP 2322 psi. Actual flush: 3851 gals.

11/18/08 4172-4178' Frac GB6 sds as follows:
30,097# 20/40 sand in 359 bbls of Lightning 17 fluid. Treated w/ ave pressure of 2167 psi w/ ave rate of 23.3 BPM. ISIP 2028 psi. Actual flush: 4116 gals.

PERFORATION RECORD

11/17/08	4946-4954'	32 holes
11/17/08	4802-4818'	64 holes
11/17/08	4630-4650'	80 holes
11/18/08	4358-4638'	40 holes
11/18/08	4172-4178'	24 holes

NEWFIELD

Jonah #S-12-9-16
880' FSL & 842' FEL
SESE Section 12-T9S-R16E
Duchesne Co, Utah
API #43-013-34010; Lease #UTU-035521

TW 04/06/09

Attachment E-16

Jonah M-12-9-16

Spud Date:-3-20-10
Put on Production: 4-28-10

GL:5455 ' KB:5467 '

SURFACE CASING

CSG SIZE: 8-5/8"
GRADE: J-55
WEIGHT: 24#
LENGTH:7 jts. (307.64')
DEPTH LANDED: 320.49'
HOLE SIZE: 12-1/4"
CEMENT DATA: 160 sxs Class "G" cmt

PRODUCTION CASING

CSG SIZE: 5-1/2"
GRADE: J-55
WEIGHT: 15.5#
LENGTH 141jts. (6145 8') Includes Shoe Jt (43 85')
HOLE SIZE: 7-7/8"
DEPTH LANDED: 6160 80'
CEMENT DATA: 275sxs Prem. Lite II mixed & 400 sxs 50/50 POZ
CEMENT TOP AT: 90'

TUBING

SIZE/GRADE/WT.: 2-7/8" / J-55 / 6.5#
NO. OF JOINTS: 182jts (5629.4')
TUBING ANCHOR:5642.4 '
NO. OF JOINTS 1jts (31.4')
SEATING NIPPLE: 2-7/8" (1 1')
SN LANDED AT:5676.7' KB
NO. OF JOINTS: 2jts (62 9')
TOTAL STRING LENGTH: EOT @ 5741'

SUCKER RODS

POLISHED ROD: 1-1/2" x 30'
SUCKER RODS:, 1-4 x 7/8 pony rods,221- 7/8" guided rods,, 4- 1 ½" weight bars
PUMP SIZE 2 ½ x 1 3/4 x 21'x 24' RHAC
STROKE LENGTH:144
PUMP SPEED: SPM 5

Wellbore Diagram

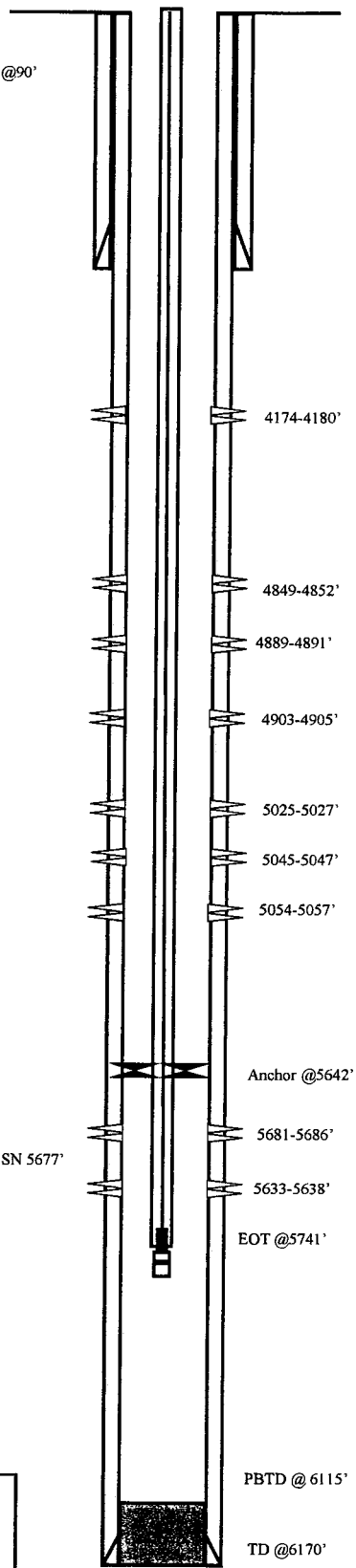

FRAC JOB

5-7-10-10 5633-5686' **Frac CP2 & CP1 sands as follows:** Frac with 44698# 20/40 sand in 295bbls Lightning 17

5-7-10 5025-5057' **Frac B2 as Follows:** Frac with 65112# 20/40 sand in 401bbls Lightning 17

5-7-10 4849-4905' **Frac D3 & C sands as follows:** Frac with 46724# 20/40 sand in 301bbls lightning 17.

5-7-10 4147-4180' **Frac GB4 sands as follows:** Frac with 17164# 20/40 sand 139 Lightning 17

PERFORATION RECORD

5681-5686'	3 JSPF	15 holes
5633-5638'	3 JSPF	15holes
5054-5057'	3 JSPF	9holes
5045-5047'	3 JSPF	6holes
5025-5027'	3 JSPF	6 holes
4903-4905'	3 JSPF	6 holes
4889-4891'	3 JSPF	6 holes
4849-4852'	3 JSPF	9holes
4147-4180'	3 JSPF	18holes

NEWFIELD

Jonah M-12-9-16
2138'FSL & 1765' FWL (NE/SW)
Section 12, T9S, R17E
Duchesne Co, Utah
API # 43-013-34098; Lease UTU-035521

MB-05-20-10

ATTACHMENT E-17

Pan American #1FR-9-16

Spud Date: 1/5/06
Put on Production: 2/9/06

GL: 5529' KB: 5541'

Wellbore Diagram

Initial Production: BOPD, MCFD, BWPD

SURFACE CASING

CSG SIZE: 10 3/4" / 32.75#
DEPTH LANDED: 309'
HOLE SIZE: 15"
CEMENT DATA: 230 sxs cement.
HOLE SIZE to 6000': 10"

PRODUCTION CASING

CSG SIZE: 5-1/2"
GRADE: J-55
WEIGHT: 15.5#
LENGTH: 132 jts. (5479.96')
DEPTH LANDED: 5477.96' KB
HOLE SIZE: 7-7/8"
CEMENT DATA: 300 sxs Prem. Lite II mixed & 500 sxs 50/50 POZ.
CEMENT TOP AT: 1290'

TUBING

SIZE/GRADE/WT.: 2-7/8" / J-55 / 6.5#
NO. OF JOINTS: 157 jts (4995.27')
TUBING ANCHOR: 5007.27' KB
NO. OF JOINTS: 3 jts (96.02')
SEATING NIPPLE: 2-7/8" (1.10')
SN LANDED AT: 5106.09' KB
NO. OF JOINTS: 2 jts (62.92')
TOTAL STRING LENGTH: EOT @ 5170.56' KB

SUCKER RODS

POLISHED ROD: 1-1/2" x 22' polished rod
SUCKER RODS: 1-8',1-6', 1-4', 1-2' x ¾" ponies, 99- ¾" scrapered rods, 88- ¾" plain rods, 10- ¾" scrapered rods, 6-1 ½" weight rods
PUMP SIZE: 2-1/2" x 1-1/2" x 14' RHAC w/SM plunger
STROKE LENGTH: 86"
PUMP SPEED, SPM: 5 SPM

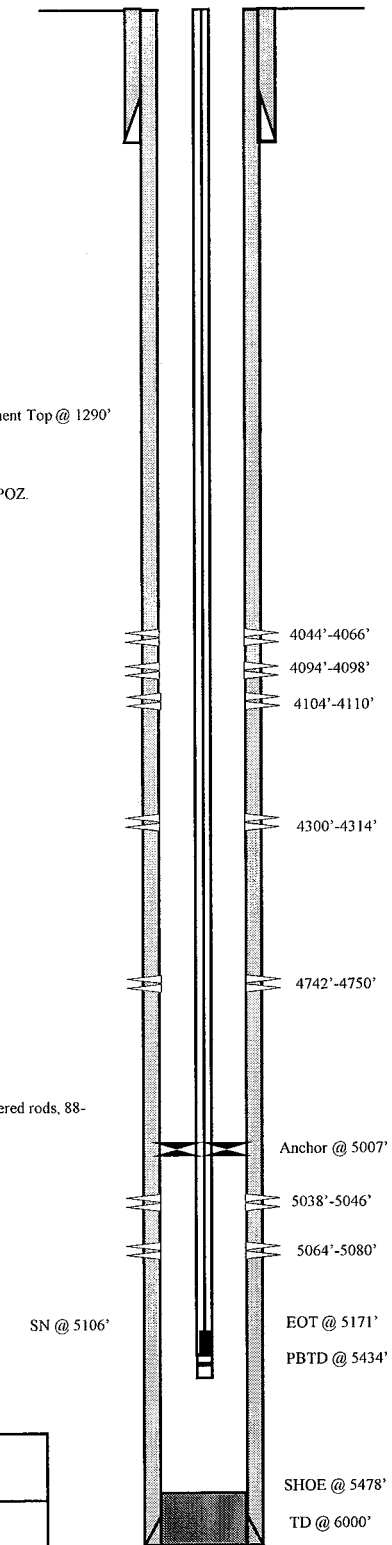

FRAC JOB

2/6/06	5038'-5080'	**Frac A1&3 sands as follows:** 70,448# 20/40 sand in 562 bbls Lightning 17 frac fluid. Treated @ avg press of 1933 psi w/avg rate of 24.9 BPM. ISIP 2050 psi. Calc flush: 5036 gal. Actual flush: 5040 gal.
2/6/06	4742'-4750'	**Frac C sands as follows:** 34,710# 20/40 sand in 390 bbls Lightning 17 frac fluid. Treated @ avg press of 1978 psi w/avg rate of 24.8 BPM. ISIP 1980 psi. Calc flush: 4740 gal. Actual flush: 4746 gal.
2/6/06	4300'-4314'	**Frac PB10 sands as follows:** 35,142# 20/40 sand in 348 bbls Lightning 17 frac fluid. Treated @ avg press of 1820 psi w/avg rate of 24.8 BPM. ISIP 2060 psi. Calc flush: 4298 gal. Actual flush: 4326 gal.
2/6/06	4044'-4110'	**Frac GB6 sands as follows:** 67,736# 20/40 sand in 511 bbls Lightning 17 frac fluid. Treated @ avg press of 1805 w/ avg rate of 24.9 BPM. ISIP 1820 psi. Calc flush: 4042 gal. Actual flush: 3906 gal.
12/13/06		**Pump Change:** Rod & Tubing detail updated.

PERFORATION RECORD

2/1/06	5064'-5080'	4 JSPF	64 holes
2/1/06	5038'-5046'	4 JSPF	32 holes
2/6/06	4742'-4750'	4 JSPF	32 holes
2/6/06	4300'-4314'	4 JSPF	56 holes
2/6/06	4104'-4110'	4 JSPF	24 holes
2/6/06	4094'-4098'	4 JSPF	16 holes
2/6/06	4044'-4066'	4 JSPF	88 holes

NEWFIELD

Pan American #1FR-9-16

663' FNL & 663' FWL

NW/NW Section 13-T9S-R16E

Duchesne Co, Utah

API #43-013-10822; Lease #UTU-75039

TW 01-19-07

ATTACHMENT E-18

Walton Federal #1
16-11-9-16

Wellbore Diagram

Spud Date: 4/01/1964

GL: 5501' KB: 5513'

Initial Production: 1073 BOPD, 100 MCFG

SURFACE CASING

CSG SIZE: 9-5/8"

GRADE: J-55

WEIGHT: 32.2#

LENGTH: 7 jts. (212')

DEPTH LANDED: 225'

HOLE SIZE:12-1/4"

CEMENT DATA: 225 sxs cement

PRODUCTION CASING

CSG SIZE: 5-1/2"

GRADE: J-55

WEIGHT: 15.5#

LENGTH: 167 jts. (5192')

DEPTH LANDED: 5205'

HOLE SIZE: 7 7/8"

CEMENT DATA: 400 sacks cmt.

CEMENT TOP AT: 4056' per CBL

CSG SIZE: 4"

GRADE: J-55

WEIGHT: 11#

LENGTH: 1077'

DEPTH LANDED: 5901'

HOLE SIZE: 4 3/4"

CEMENT DATA: 201 sacks cmt.

CEMENT TOP AT: ????? After squeeze

4" Liner Top @ 4816'

TUBING

SIZE/GRADE/WT: 2 7/8" / J-55 / 6.5#

NO. OF JOINTS: 146 jts (4588.2')

TUBING ANCHOR: 4600.2'

NO. OF JOINTS: 2 jts (62.9')

SEATING NIPPLE: 2 7/8" (1.10')

SN LANDED AT: 4666' KB

NO. OF JOINTS: 1 jts (31')

TOTAL STRING LENGTH: EOT @ 4796' W/ 12' KB

SUCKER RODS

POLISHED ROD: 1 1/2" x 22' SM

SUCKER RODS: 1-2' x ¾", 2-8' x 3/4" pony rods, 91 – ¾" guided rods, 40 – ¾" sucker rods, 28 – ¾" guided rods, 20 – ¾" 4per guided rods, 6-1 1/2" sinker bars

PUMP SIZE: 2 1/2" x 1 3/4" x 16' x 20' RHAC

STROKE LENGTH: 86

PUMP SPEED, SPM: 5 SPM

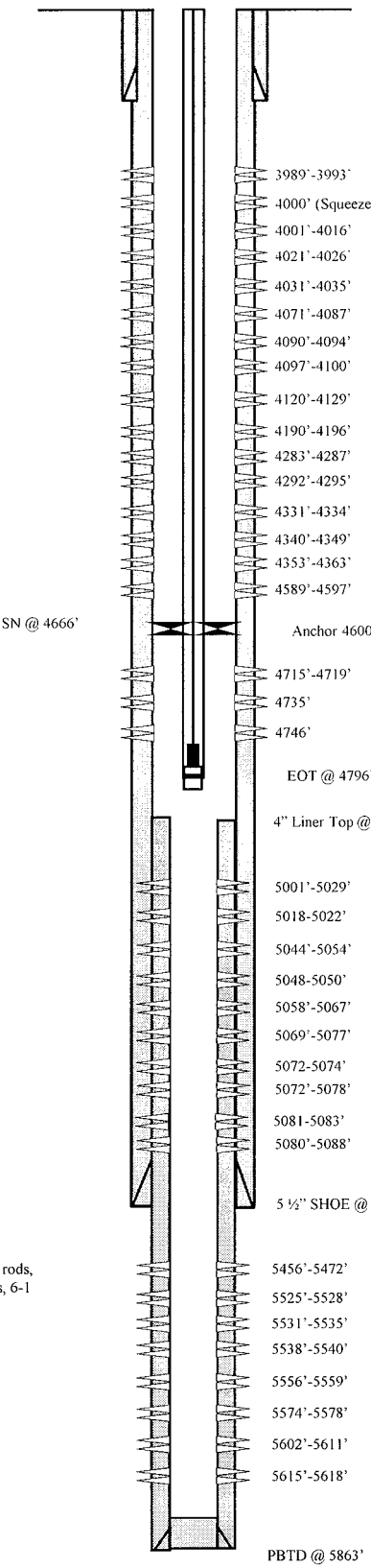

FRAC JOB

5/07/64	5007'-5020'	**Frac zone as follows:** 21,000# 20/40 sand + 2000# 8/12 beads in 500 bbl crude oil. Treated @ 3750 psi @ 37 BPM.
5/07/64	4735'-4746'	**Frac zone as follows:** 20,000# 20/40 sand + 2000# 8/12 beads in 475 bbl crude oil. Treated @ 3700 psi @ 32 BPM.
10/05/66	4735'-5084'	**Frac zone as follows:** 62,000# 20/40 sand + 2000# beads in 1750 bbl 1% acetic acid. Treated @ 2800 psi @ 54 BPM. Calc. flush: 5075 gal. Actual flush: 6500 gal.
9/25/96	5007'-5084'	**Frac zone as follows:** 29,760# 16/30 sand in 168 bbl KCl. Treated @ 3450 psi @ 13 BPM, ISIP 1990 psi.
9/25/96	4589'-4746'	**Frac zone as follows:** 12,000# 16/30 sand in 212 bbl KCl. Treated @ 2900 psi @ 22.5 BPM, ISIP 2520 psi.
8/11/03	5456'-5618'	**Frac CP1, CP2, & CP3 sands as follows:** 120,283# 20/40 sand in 879 Bbls Viking I-25 fluid. Treated @ avg. press of 3825 psi w/ avg. rate of 14.4 BPM. ISIP: 1770 psi. Calc flush: 1270 Gal. Actual flush: 1218 gal.
8/12/03	4589'-4597'	**Re-Frac D1 sands as follows:** 20,026# 20/40 sand in 235 Bbls Viking I-25 fluid. Treated @ avg. press of 3340 psi w/ avg rate of 17.3 BPM. ISIP 3850 psi. Calc flush: 4587 gal. Actual flush: 4410 gal.
8/13/03	4190'-4363'	**Frac PB7, PB10, & PB11 sands as follows:** 65,480# 20/40 sand in 485 Bbls Viking I-25 fluid. Treated @ avg. press of 3225 psi w/ avg rate of 23.6 BPM. ISIP: 3850 psi. Calc. Flush: 4188 gal. Actual flush: 2142 gal. (Screened Out)
8/13/03	3989'-4129'	**Frac GB2, GB4, and GB6 sands as follows:** 155,102# 20/40 sand in 996 Bbls Viking I-25 fluid. Treated @ avg. press of 1950 psi w/ avg. rate of 24.5 BPM. ISIP: 2200 psi. Calc flush: 3987 gal. Actual flush: 3906 gal.
9/20/10		**Re-Completion**
9/14/10	5018-5083'	**Frac A1 & A3 sands as follows:** 33495# 20/40 sand in 261 bbls Lightning 17 fluid.

PERFORATION RECORD

5/06/64	5020'	3 SPF	03 holes
5/06/64	5013'	3 SPF	03 holes
5/06/64	5007'	3 SPF	03 holes
5/06/64	4746'	3 SPF	03 holes
5/06/64	4735'	3 SPF	03 holes
10/5/66	5075'	1 SPF	01 hole
10/5/66	5084'	1 SPF	01 hole
08/1982	4589'-4597'		?? holes
9/24/96	5072'-5078'	2 SPF	12 holes
9/24/96	5046'-5054'	2 SPF	16 holes
9/24/96	4715'-4719'	4 SPF	16 holes
9/24/96	4590'-4595'	4 SPF	20 holes
7/24/03	4000' (squeeze)	4 JSPF	4 holes
8/11/03	5615'-5618'	4 JSPF	12 holes
8/11/03	5602'-5611'	4 JSPF	36 holes
8/11/03	5574'-5578'	4 JSPF	16 holes
8/11/03	5556'-5559'	4 JSPF	12 holes
8/11/03	5538'-5540'	4 JSPF	8 holes
8/11/03	5531'-5535'	4 JSPF	16 holes
8/11/03	5525'-5528'	4 JSPF	12 holes
8/11/03	5456'-5472'	4 JSPF	64 holes
8/12/03	4353'-4363'	4 JSPF	40 holes
8/12/03	4340'-4349'	4 JSPF	36 holes
8/12/03	4331'-4334'	4 JSPF	12 holes
8/12/03	4292'-4295'	4 JSPF	12 holes
8/12/03	4283'-4287'	4 JSPF	16 holes
8/12/03	4190'-4196'	4 JSPF	24 holes
8/13/03	4120'-4129'	4 JSPF	36 holes
8/13/03	4097'-4100'	4 JSPF	12 holes
8/13/03	4090'-4094'	4 JSPF	16 holes
8/13/03	4071'-4087'	4 JSPF	64 holes
8/13/03	4031'-4035'	4 JSPF	16 holes
8/13/03	4021'-4026'	4 JSPF	20 holes
8/13/03	4001'-4016'	4 JSPF	60 holes
8/13/03	3989'-3993'	4 JSPF	16 holes
8/14/03	5080'-5088'	2 JSPF	16 holes
8/14/03	5069'-5077'	2 JSPF	16 holes
8/14/03	5058'-5067'	2 JSPF	18 holes
8/14/03	5044'-5054'	2 JSPF	20 holes
8/14/03	5001'-5029'	2 JSPF	56 holes
9/14/10	5081-5083'	3 JSPF	6 holes
9/14/10	5072-5074'	3 JSPF	6 holes
9/14/10	5048-5050'	3 JSPF	6 holes
9/14/10	5018-5022'	3 JSPF	12 holes

Walton Federal #1 16-11-9-16
705' FSL & 704' FEL
SESE Section 11-T9S-R16E
Duchesne Co, Utah
API #43-013-15792; Lease #U-096550

L:CN 09-21-10

GMBU B-14-9-16

Spud Date: 10/09/2011

PWOP: 12/07/2011

GL: 5505' KB: 5518'

SURFACE CASING

CSG SIZE: 8-5/8"

GRADE: J-55

WEIGHT: 24#

LENGTH: 7 jts. (314.98')

DEPTH LANDED: 328.30' KB

HOLE SIZE: 12-1/4"

CEMENT DATA: 160 sxs Class "G" cmt

PRODUCTION CASING

CSG SIZE: 5-1/2"

GRADE: J-55

WEIGHT: 15.5#

LENGTH: 143 jts. (6040.15') Includes Shoe Jt. (42.98')

HOLE SIZE: 7-7/8"

DEPTH LANDED: 6059.66' KB

CEMENT DATA: 225 sxs Prem. Lite II mixed & 455 sxs 50/50 POZ.

CEMENT TOP AT: 47'

TUBING

SIZE/GRADE/WT.: 2-7/8" / J-55 / 6.5#

NO. OF JOINTS: 182 jts. (5666.1')

TUBING ANCHOR: 5679.1' KB

NO. OF JOINTS: 1 jt. (31.3')

SEATING NIPPLE: 2-7/8" (1.1')

SN LANDED AT: 5713.2' KB

NO. OF JOINTS: 2 jts. (60.6')

NOTCHED COLLAR: 5774.8' KB

TOTAL STRING LENGTH: EOT @ 5775'

SUCKER RODS

POLISHED ROD: 1-1/2" x 30' Spray Metal Polished Rod

SUCKER RODS: 1 – 7/8" x 4' Pony Rod, 1 – 7/8" x 6' Pony Rod, 1 – 7/8" x 8' Pony Rod, 71 – 7/8" 4per Guided Rods (1775'), 143 – ¾" 4per Guided Rods (3575'), 12 – 7/8" 8per Guided Rods (300')

PUMP SIZE: 2-1/2" x 1-3/4" x 20' x 24' RHAC

STROKE LENGTH: 144"

PUMP SPEED: 5 SPM

Wellbore Diagram

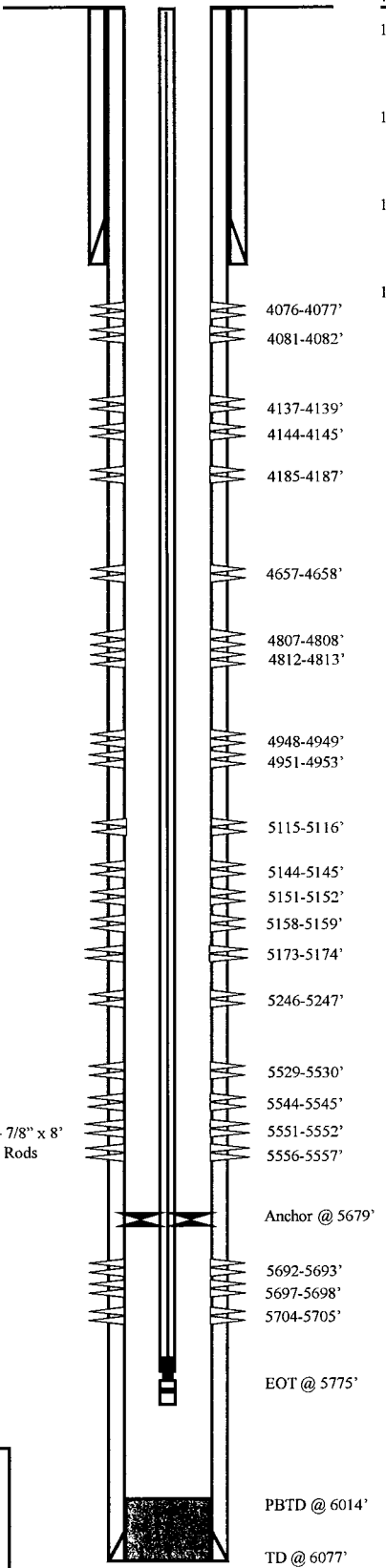

FRAC JOB

11/18/2011	5529-5705'	**Frac CP1 & CP3, sands as follows:** Frac with 50271# 20/40 white sand in 625 bbls lightning 17 fluid; 841 bbls total fluid to recover.
11/28/2011	5115-5247'	**Frac A3 & LODC, sands as follows:** Frac with 74870# 20/40 white sand in 586 bbls lightning 17 fluid; 706 bbls total fluid to recover.
11/28/2011	4657-4953'	**Frac B2, C-Sand & D1, sands as follows:** Frac with 70185# 20/40 white sand in 541 bbls lightning 17 fluid; 649 bbls total fluid to recover.
11/28/2011	4076-4187'	**Frac GB2, GB4 & GB6, sands as follows:** Frac with 99881# 20/40 white sand in 591 bbls lightning 17 fluid; 686 bbls total fluid to recover.

PERFORATION RECORD

5704-5705'	3 JSPF	3 holes
5697-5698'	3 JSPF	3 holes
5692-5693'	3 JSPF	3 holes
5556-5557'	3 JSPF	3 holes
5551-5552'	3 JSPF	3 holes
5544-5545'	3 JSPF	3 holes
5529-5530'	3 JSPF	3 holes
5246-5247'	3 JSPF	3 holes
5173-5174'	3 JSPF	3 holes
5158-5159'	3 JSPF	3 holes
5151-5152'	3 JSPF	3 holes
5144-5145'	3 JSPF	3 holes
5115-5116'	3 JSPF	3 holes
4951-4953'	3 JSPF	6 holes
4948-4949'	3 JSPF	3 holes
4812-4813'	3 JSPF	3 holes
4807-4808'	3 JSPF	3 holes
4657-4658'	3 JSPF	3 holes
4185-4187'	3 JSPF	6 holes
4144-4145'	3 JSPF	3 holes
4137-4139'	3 JSPF	6 holes
4081-4082'	3 JSPF	3 holes
4076-4077'	3 JSPF	3 holes

NEWFIELD

GMBU B-14-9-16

730'FSL & 731' FEL (SE/SE)

Section 11, T9S, R16E

Duchesne County, Utah

API #43-013-50580; Lease # UTU-096550

CS03/15/12

NEWFIELD

GMBU C-13-9-16

Monument Butte - Duchesne County, Utah, USA

Surface Location: NE/NE- Sec 13, T9S, R16E; 614' FNL & 1,825' FEL

5,477' GL + 10' KB

API#: 43-013-51156; Lease#: UTU-64805

Mickey Moulton

PFM 12/4/2012

Spud Date: 9/21/2012; PoP Date: 10/30/2012

CASING DETAIL

Casing	Top	Bottom	Size	Wt	Grade	Drift	Burst	Collapse	ID	gal/ft	Coupling	Hole
Surf	10'	6,227'	8-5/8"	24#	J-55	7.972"	2,950	1,370	8.097"	2.6749	STC	12.250
Prod	10'	6,227'	5-1/2"	15.5#	J-55	4.825"	4,810	4,040	4.950"	0.9997	LTC	7.875

TBG. DETAIL

Top	Bottom	Coupling	Size	Wt.	Grade	Drift	Burst	Collapse	ID	Packer/Hanger
10'	5,664'	8EUE	2-7/8"	6.5#	J-55	2.347"	7,260	7,680	2.441"	Tubing Anchor Set @ 5,565'
										Seating Nipple @ 5,59

ROD DETAIL

Component	Top	Bottom	Size	Grade	Length	Count	Pump
Polish Rod	0'	30'	1 1/2"	Spray Metal	30'	1	Insert Pump: 2.5 Max ID x 1.75 Plunger
Pony Rod	30'	32'	7/8"	Tenaris D78	2'	1	RHAC @ 5,592'. 4' Spray Metal plunger
Pony Rod	32'	36'	7/8"	Tenaris D78	4'	1	0.003.
Pony Rod	36'	42'	7/8"	Tenaris D78	6'	1	
4per Guided Rod	42'	1,792'	7/8"	Tenaris D78	1,750'	70	
4per Guided Rod	1,792'	4,892'	3/4"	Tenaris D78	3,100'	124	
8per Guided Rod	4,892'	5,592'	7/8"	Tenaris D78	700'	28	

Frac Summary

Stage	Top	Bottom	SPF	Gun Size	Date					
5	4,156'	4,159'	3	9'	10/18/2012	**Formation:**	GB-6	GB-4		
	4,205'	4,207'	3	6'	10/18/2012	**20/40 White:**	27,047	lbs	**15% HCl:**	0 gals
	0'	0'	3	0'	-	**Pad:**	2,965	gals	**Treating Fluid:**	6,665 gals
	0'	0'	3	0'	-	**Flush:**	4,561	gals	**Load to Recover:**	14,191 gals
	0'	0'	3	0'	-	**ISIP=**	0.882	psi/ft	**Max STP:**	3,099 psi
4	4,330'	4,332'	3	6'	10/18/2012	**Formation:**	PB-10	PB-8		
	4,400'	4,402'	3	6'	10/18/2012	**20/40 White:**	37,380	lbs	**15% HCl:**	252 gals
	4,414'	4,416'	3	6'	10/18/2012	**Pad:**	3,406	gals	**Treating Fluid:**	8,816 gals
	0'	0'	3	0'	-	**Flush:**	4,309	gals	**Load to Recover:**	16,783 gals
	0'	0'	3	0'	-	**ISIP=**	1.044	psi/ft	**Max STP:**	3,874 psi
3	4,584'	4,586'	3	6'	10/17/2012	**Formation:**	C-Sand	DS-1		
	4,859'	4,861'	3	6'	10/17/2012	**20/40 White:**	64,788	lbs	**15% HCl:**	252 gals
	4,869'	4,872'	3	9'	10/17/2012	**Pad:**	3,826	gals	**Treating Fluid:**	16,190 gals
	0'	0'	3	0'	-	**Flush:**	4,448	gals	**Load to Recover:**	24,716 gals
	0'	0'	3	0'	-	**ISIP=**	0.884	psi/ft	**Max STP:**	3,142 psi
2	5,017'	5,019'	3	6'	10/17/2012	**Formation:**	A-3	A-1	B-1	
	5,021'	5,022'	3	3'	10/17/2012	**20/40 White:**	53,183	lbs	**15% HCl:**	252 gals
	5,139'	5,140'	3	3'	10/17/2012	**Pad:**	3,284	gals	**Treating Fluid:**	13,019 gals
	5,147'	5,149'	3	6'	10/17/2012	**Flush:**	5,498	gals	**Load to Recover:**	22,053 gals
	5,180'	5,181'	3	3'	10/17/2012	**ISIP=**	-	psi/ft	**Max STP:**	2,966 psi
1	5,562'	5,564'	3	6'	10/16/2012	**Formation:**	CP-1	CP-Half		
	5,605'	5,609'	3	12'	10/16/2012	**20/40 White:**	27,492	lbs	**15% HCl:**	378 gals
	0'	0'	3	0'	-	**Pad:**	2,747	gals	**Treating Fluid:**	7,060 gals
	0'	0'	3	0'	-	**Flush:**	5,431	gals	**Load to Recover:**	15,616 gals
	0'	0'	3	0'	-	**ISIP=**	0.794	psi/ft	**Max STP:**	3,191 psi

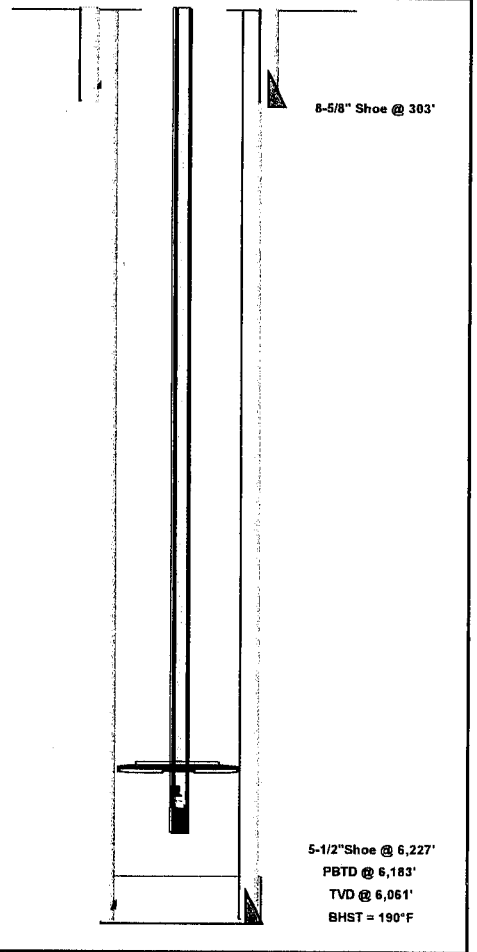

CEMENT

Surf	On 9/21/12 Baker cemented 8 5/8" casing w/ 160 sks Class "G" + 2% KCl + 0.25#/sk Cello Flake at 15.8 ppg w/ 1.17 yield and returned 5 bbls to the pit.
Prod	On 9/29/12 Baker pumped 222 sks lead @ 11 ppg w/ 3.53 yield plus 448 sks tail @ 14.4 ppg w/ 1.24 yield. TOC @ 90'

NEWFIELD

GMBU V-12-9-16

Monument Butte - Duchesne County, Utah, USA

Surface Location: NW/NE - Sec 13, T9S, R16E; 615' FNL & 1,804' FEL

5,477' GL + 10' KB

API#: 43-013-51155; Lease#: UTU-64805

Mickey Moulton

PFM 12/4/2012

Spud Date: 9/20/2012; PoP Date: 10/30/2012

CASING DETAIL

Casing	Top	Bottom	Size	Wt	Grade	Drift	Burst	Collapse	ID	gal/ft	Coupling	Hole
Surf	10'	308'	8-5/8"	24#	J-55	7.972"	2,950	1,370	8.097"	2.6749	STC	12.250
Prod	10'	6,155'	5-1/2"	15.5#	J-55	4.825"	4,810	4,040	4.950"	0.9997	LTC	7.875

TBG. DETAIL

Top	Bottom	Coupling	Size	Wt.	Grade	Drift	Burst	Collapse	ID	Packer/Hanger
10'	5,790'	8EUE	2-7/8"	6.5#	J-55	2.347"	7,260	7,680	2.441"	Tubing Anchor Set @ 5,691'
										Seating Nipple @ 5,72

ROD DETAIL

Component	Top	Bottom	Size	Grade	Length	Count	Pump
Polish Rod	0'	30'	1 1/2"	Spray Metal	30'	1	Insert Pump: 2.5 Max ID x 1.75 Plunger
Pony Rod	30'	46'	7/8"	Tenaris D78	16'	1	RHAC @ 5,721'. 4' Spray Metal 0.003, 224"
4per Guided Rod	46'	1,971'	7/8"	Tenaris D78	1,925'	77	max stroke, CPID Barrel.
4per Guided Rod	1,971'	5,021'	3/4"	Tenaris D78	3,050'	122	
8per Guided Rod	5,021'	5,721'	7/8"	Tenaris D78	700'	28	

Frac Summary

Stage	Top	Bottom	SPF	Gun Size	Date					
5	4,165'	4,167'	3	6'	10/18/2012	**Formation:**	PB-10	GB-6		Base Fluid 7% KCL
	4,375'	4,376'	3	3'	10/18/2012	**20/40 White:**	62,497	lbs	**15% HCl:**	0 gals
	4,380'	4,382'	3	6'	10/18/2012	**Pad:**	3,255	gals	**Treating Fluid:**	14,671 gals
	4,393'	4,394'	3	3'	10/18/2012	**Flush:**	3,822	gals	**Load to Recover:**	21,748 gals
	0'	0'	3	0'	-	**ISIP=**	0.862	psi/ft	**Max STP:**	3,447 psi
4	4,792'	4,794'	3	6'	10/18/2012	**Formation:**	C			Base Fluid 7% KCL
	4,804'	4,805'	3	3'	10/18/2012	**20/40 White:**	51,461	lbs	**15% HCl:**	252 gals
	4,812'	4,814'	3	6'	10/18/2012	**Pad:**	3,192	gals	**Treating Fluid:**	8,699 gals
	0'	0'	3	0'	-	**Flush:**	4,658	gals	**Load to Recover:**	19,187 gals
	0'	0'	3	0'	-	**ISIP=**	0.909	psi/ft	**Max STP:**	3,284 psi
3	4,876'	4,878'	3	6'	10/18/2012	**Formation:**	B2	B-Half		Base Fluid 7% KCL
	4,940'	4,944'	3	12'	10/18/2012	**20/40 White:**	59,815	lbs	**15% HCl:**	252 gals
	0'	0'	3	0'	-	**Pad:**	623	gals	**Treating Fluid:**	13,787 gals
	0'	0'	3	0'	-	**Flush:**	4,822	gals	**Load to Recover:**	23,096 gals
	0'	0'	3	0'	-	**ISIP=**	0.821	psi/ft	**Max STP:**	3,618 psi
2	5,096'	5,098'	3	6'	10/18/2012	**Formation:**	A1			Base Fluid 7% KCL
	5,106'	5,108'	3	6'	10/18/2012	**20/40 White:**	32,856	lbs	**15% HCl:**	252 gals
	5,112'	5,114'	3	6'	10/18/2012	**Pad:**	2,575	gals	**Treating Fluid:**	8,407 gals
	0'	0'	3	0'	-	**Flush:**	5,036	gals	**Load to Recover:**	16,270 gals
	0'	0'	3	0'	-	**ISIP=**	-	psi/ft	**Max STP:**	2,566 psi
1	5,706'	5,710'	3	12'	10/17/2012	**Formation:**	CP4			Base Fluid 7% KCL
	0'	0'	3	0'	-	**20/40 White:**	25,117	lbs	**15% HCl:**	378 gals
	0'	0'	3	0'	-	**Pad:**	3,692	gals	**Treating Fluid:**	6,401 gals
	0'	0'	3	0'	-	**Flush:**	5,636	gals	**Load to Recover:**	16,107 gals
	0'	0'	3	0'	-	**ISIP=**	0.746	psi/ft	**Max STP:**	3,604 psi

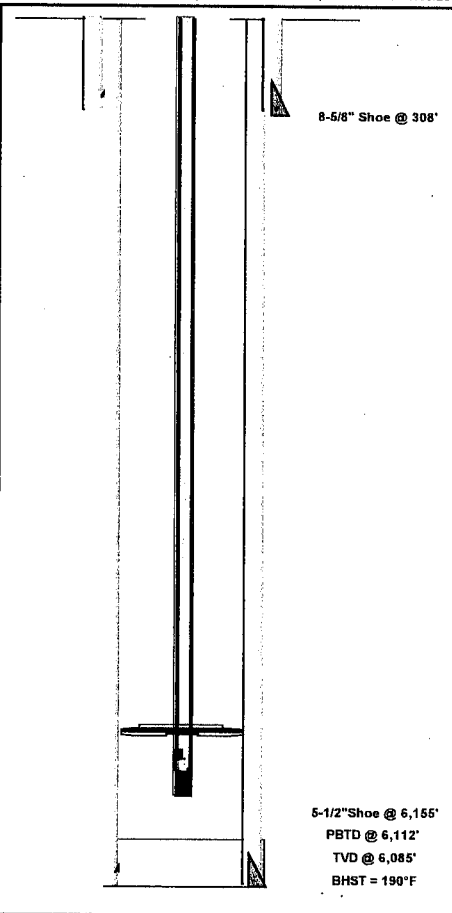

CEMENT

Surf	On 9/21/12 Baker cemented 8 5/8" casing w/ 160 sks Class "G" + 2% KCl + 0.25#/sk Cello Flake at 15.8 ppg w/ 1.17 yield and returned 5 bbls to the pit.
Prod	On 10/4/12 Baker pumped 221 sks lead @ 11 ppg w/ 3.53 yield plus 443 sks tail @ 14.4 ppg w/ 1.24 yield. Returned 15 bbls to the pit. TOC @ Surface

Multi-Chem Analytical Laboratory
1553 East Highway 40
Vernal, UT 84078

ATTACHMENT F
1 of 4

multi-chem
A HALLIBURTON SERVICE

Water Analysis Report

Production Company:	**NEWFIELD PRODUCTION**	Sales Rep:	**Darren Betts**
Well Name:	**BELUGA INJECTION**	Lab Tech:	**Gary Peterson**
Sample Point:	**After production filter**		
Sample Date:	**12/9/2011**		
Sample ID:	**WA-204146**		

Scaling potential predicted using ScaleSoftPitzer from Brine Chemistry Consortium (Rice University)

Sample Specifics	
Test Date:	12/9/2011
System Temperature 1 (°F):	300.00
System Pressure 1 (psig):	3000.00
System Temperature 2 (°F):	70.00
System Pressure 2 (psig):	14.70
Calculated Density (g/ml):	1.02
pH:	8.60
Calculated TDS (mg/L):	36236.98
CO2 in Gas (%):	0.00
Dissolved CO2 (mg/L)):	0.00
H2S in Gas (%):	0.00
H2S in Water (mg/L):	25.00

Analysis @ Properties in Sample Specifics			
Cations	*mg/L*	*Anions*	*mg/L*
Sodium (Na):	13791.93	Chloride (Cl):	20000.00
Potassium (K):	35.40	Sulfate (SO_4):	480.00
Magnesium (Mg):	13.30	Bicarbonate (HCO_3):	1854.40
Calcium (Ca):	38.50	Carbonate (CO_3):	0.00
Strontium (Sr):	0.00	Acetic Acid (CH_3COO)	0.00
Barium (Ba):	6.73	Propionic Acid (C_2H_5COO)	0.00
Iron (Fe):	15.50	Butanoic Acid (C_3H_7COO)	0.00
Zinc (Zn):	0.00	Isobutyric Acid ($(CH_3)_2CHCOO$)	0.00
Lead (Pb):	0.81	Fluoride (F):	0.00
Ammonia NH_3:	0.00	Bromine (Br):	0.00
Manganese (Mn):	0.41	Silica (SiO_2):	0.00

Notes:
P=15.5 mg/l

(PTB = Pounds per Thousand Barrels)

		Calcium Carbonate		Barium Sulfate		Iron Sulfide		Iron Carbonate		Gypsum CaSO4·2H2O		Celestite SrSO4		Halite NaCl		Zinc Sulfide	
Temp (°F)	PSI	SI	PTB	SI	PTB	SI	PTB	SI	PTB	SI	PTB	SI	PTB	SI	PTB	SI	PTB
70	14	1.36	31.45	1.70	3.93	4.85	8.55	2.69	11.25	0.00	0.00	0.00	0.00	0.00	0.00	0.00	0.00
95	346	1.38	31.56	1.47	3.87	4.61	8.55	2.80	11.25	0.00	0.00	0.00	0.00	0.00	0.00	0.00	0.00
121	678	1.41	31.71	1.28	3.80	4.44	8.55	2.90	11.25	0.00	0.00	0.00	0.00	0.00	0.00	0.00	0.00
146	1009	1.45	31.89	1.13	3.71	4.32	8.55	2.98	11.26	0.00	0.00	0.00	0.00	0.00	0.00	0.00	0.00
172	1341	1.50	32.08	1.02	3.62	4.25	8.55	3.04	11.26	0.00	0.00	0.00	0.00	0.00	0.00	0.00	0.00
197	1673	1.55	32.28	0.93	3.54	4.21	8.55	3.09	11.26	0.00	0.00	0.00	0.00	0.00	0.00	0.00	0.00
223	2004	1.61	32.48	0.87	3.46	4.19	8.55	3.13	11.26	0.00	0.00	0.00	0.00	0.00	0.00	0.00	0.00
248	2336	1.68	32.68	0.83	3.41	4.20	8.55	3.16	11.26	0.00	0.00	0.00	0.00	0.00	0.00	0.00	0.00
274	2668	1.75	32.85	0.80	3.37	4.23	8.55	3.17	11.26	0.00	0.00	0.00	0.00	0.00	0.00	0.00	0.00
300	3000	1.83	33.00	0.79	3.35	4.27	8.55	3.16	11.26	0.00	0.00	0.00	0.00	0.00	0.00	0.00	0.00

		Hemihydrate CaSO4~0.5H2O		Anhydrate CaSO4		Calcium Fluoride		Zinc Carbonate		Lead Sulfide		Mg Silicate		Ca Mg Silicate		Fe Silicate	
Temp (°F)	PSI	SI	PTB	SI	PTB	SI	PTB	SI	PTB	SI	PTB	SI	PTB	SI	PTB	SI	PTB
70	14	0.00	0.00	0.00	0.00	0.00	0.00	0.00	0.00	14.14	0.33	0.00	0.00	0.00	0.00	0.00	0.00
95	346	0.00	0.00	0.00	0.00	0.00	0.00	0.00	0.00	13.28	0.33	0.00	0.00	0.00	0.00	0.00	0.00
121	678	0.00	0.00	0.00	0.00	0.00	0.00	0.00	0.00	12.54	0.33	0.00	0.00	0.00	0.00	0.00	0.00
146	1009	0.00	0.00	0.00	0.00	0.00	0.00	0.00	0.00	11.89	0.33	0.00	0.00	0.00	0.00	0.00	0.00
172	1341	0.00	0.00	0.00	0.00	0.00	0.00	0.00	0.00	11.34	0.33	0.00	0.00	0.00	0.00	0.00	0.00
197	1673	0.00	0.00	0.00	0.00	0.00	0.00	0.00	0.00	10.85	0.33	0.00	0.00	0.00	0.00	0.00	0.00
223	2004	0.00	0.00	0.00	0.00	0.00	0.00	0.00	0.00	10.42	0.33	0.00	0.00	0.00	0.00	0.00	0.00
248	2336	0.00	0.00	0.00	0.00	0.00	0.00	0.00	0.00	10.04	0.33	0.00	0.00	0.00	0.00	0.00	0.00
274	2668	0.00	0.00	0.00	0.00	0.00	0.00	0.00	0.00	9.70	0.33	0.00	0.00	0.00	0.00	0.00	0.00
300	3000	0.00	0.00	0.00	0.00	0.00	0.00	0.00	0.00	9.39	0.33	0.00	0.00	0.00	0.00	0.00	0.00

These scales have positive scaling potential under initial temperature and pressure: Calcium Carbonate Barium Sulfate Iron Sulfide Iron Carbonate Lead Sulfide

Multi-Chem Analytical Laboratory
1553 East Highway 40
Vernal, UT 84078

ATTACHMENT F
204

multi-chem
A HALLIBURTON SERVICE

These scales have positive scaling potential under final temperature and pressure: Calcium Carbonate Barium Sulfate Iron Sulfide Iron Carbonate Lead Sulfide

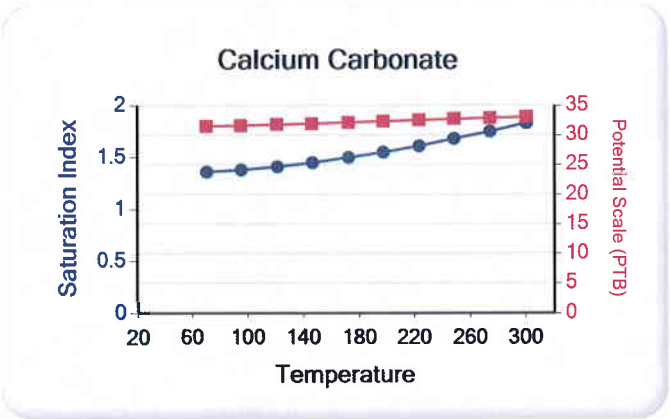

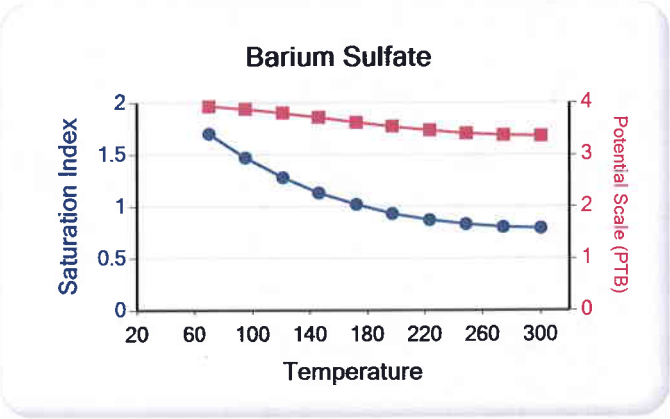

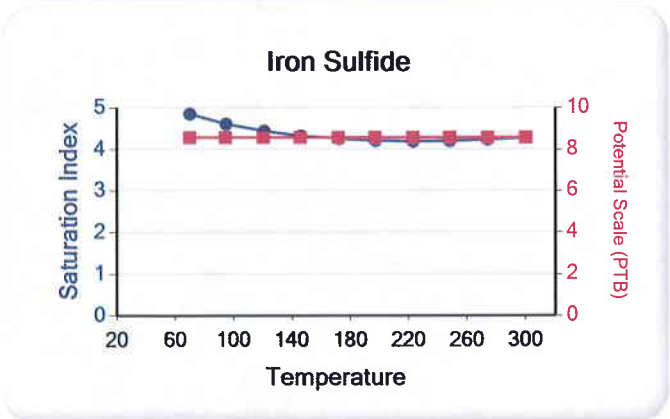

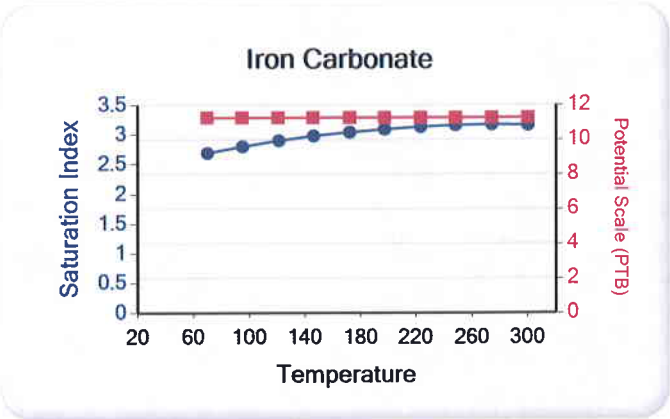

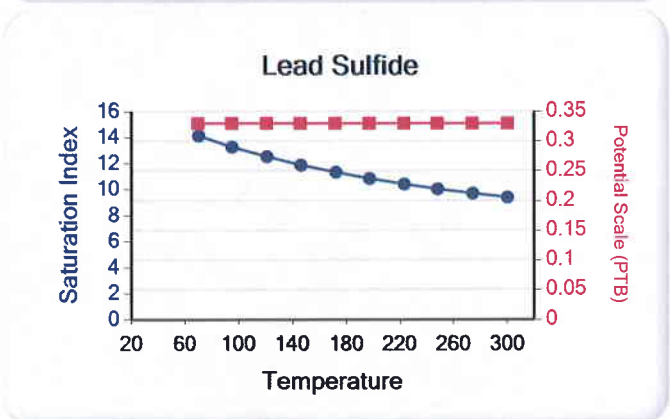

Multi-Chem Analytical Laboratory
1553 East Highway 40
Vernal, UT 84078

ATTACHMENT F
3 of 4

multi-chem
A HALLIBURTON SERVICE

Units of Measurement: **Standard**

Water Analysis Report

Production Company:	**NEWFIELD PRODUCTION**	Sales Rep:	**Michael McBride**
Well Name:	**MON 24-12J-9-16**	Lab Tech:	**Gary Peterson**
Sample Point:	**Treater**		
Sample Date:	**5/15/2012**		
Sample ID:	**WA-215011**		

Scaling potential predicted using ScaleSoftPitzer from Brine Chemistry Consortium (Rice University)

Sample Specifics

Test Date:	6/5/2012
System Temperature 1 (°F):	160.00
System Pressure 1 (psig):	60.0000
System Temperature 2 (°F):	160.00
System Pressure 2 (psig):	60.0000
Calculated Density (g/ml):	1.009
pH:	8.70
Calculated TDS (mg/L):	16888.29
CO2 in Gas (%):	0.00
Dissolved CO_2 (mg/L)):	0.00
H_2S in Gas (%):	0.00
H2S in Water (mg/L):	0.00

Analysis @ Properties in Sample Specifics

Cations	*mg/L*	*Anions*	*mg/L*
Sodium (Na):	6406.60	Chloride (Cl):	9200.00
Potassium (K):	39.00	Sulfate (SO_4):	18.00
Magnesium (Mg):	0.67	Bicarbonate (HCO_3):	1220.00
Calcium (Ca):	2.40	Carbonate (CO_3):	0.00
Strontium (Sr):	0.00	Acetic Acid (CH_3COO)	0.00
Barium (Ba):	1.60	Propionic Acid (C_2H_5COO)	0.00
Iron (Fe):	0.01	Butanoic Acid (C_3H_7COO)	0.00
Zinc (Zn):	0.00	Isobutyric Acid ($(CH_3)_2CHCOO$)	0.00
Lead (Pb):	0.01	Fluoride (F):	
Ammonia NH_3:		Bromine (Br):	
Manganese (Mn):	0.00	Silica (SiO_2):	

Notes:

(PTB = Pounds per Thousand Barrels)

		Calcium Carbonate		Barium Sulfate		Iron Sulfide		Iron Carbonate		Gypsum CaSO4·2H2O		Celestite SrSO4		Halite NaCl		Zinc Sulfide	
Temp (°F)	PSI	SI	PTB	SI	PTB	SI	PTB	SI	PTB	SI	PTB	SI	PTB	SI	PTB	SI	PTB
160.00	60.00	0.42	1.29	0.00	0.00	0.00	0.00	0.02	0.00	0.00	0.00	0.00	0.00	0.00	0.00	0.00	0.00
160.00	60.00	0.42	1.29	0.00	0.00	0.00	0.00	0.02	0.00	0.00	0.00	0.00	0.00	0.00	0.00	0.00	0.00
160.00	60.00	0.42	1.29	0.00	0.00	0.00	0.00	0.02	0.00	0.00	0.00	0.00	0.00	0.00	0.00	0.00	0.00
160.00	60.00	0.42	1.29	0.00	0.00	0.00	0.00	0.02	0.00	0.00	0.00	0.00	0.00	0.00	0.00	0.00	0.00
160.00	60.00	0.42	1.29	0.00	0.00	0.00	0.00	0.02	0.00	0.00	0.00	0.00	0.00	0.00	0.00	0.00	0.00
160.00	60.00	0.42	1.29	0.00	0.00	0.00	0.00	0.02	0.00	0.00	0.00	0.00	0.00	0.00	0.00	0.00	0.00
160.00	60.00	0.42	1.29	0.00	0.00	0.00	0.00	0.02	0.00	0.00	0.00	0.00	0.00	0.00	0.00	0.00	0.00
160.00	60.00	0.42	1.29	0.00	0.00	0.00	0.00	0.02	0.00	0.00	0.00	0.00	0.00	0.00	0.00	0.00	0.00
160.00	60.00	0.42	1.29	0.00	0.00	0.00	0.00	0.02	0.00	0.00	0.00	0.00	0.00	0.00	0.00	0.00	0.00
160.00	60.00	0.42	1.29	0.00	0.00	0.00	0.00	0.02	0.00	0.00	0.00	0.00	0.00	0.00	0.00	0.00	0.00

		Hemihydrate CaSO4·0.5H2O		Anhydrate CaSO4		Calcium Fluoride		Zinc Carbonate		Lead Sulfide		Mg Silicate		Ca Mg Silicate		Fe Silicate	
Temp (°F)	PSI	SI	PTB	SI	PTB	SI	PTB	SI	PTB	SI	PTB	SI	PTB	SI	PTB	SI	PTB
160.00	60.00	0.00	0.00	0.00	0.00	0.00	0.00	0.00	0.00	0.00	0.00	0.00	0.00	0.00	0.00	0.00	0.00
160.00	60.00	0.00	0.00	0.00	0.00	0.00	0.00	0.00	0.00	0.00	0.00	0.00	0.00	0.00	0.00	0.00	0.00
160.00	60.00	0.00	0.00	0.00	0.00	0.00	0.00	0.00	0.00	0.00	0.00	0.00	0.00	0.00	0.00	0.00	0.00
160.00	60.00	0.00	0.00	0.00	0.00	0.00	0.00	0.00	0.00	0.00	0.00	0.00	0.00	0.00	0.00	0.00	0.00
160.00	60.00	0.00	0.00	0.00	0.00	0.00	0.00	0.00	0.00	0.00	0.00	0.00	0.00	0.00	0.00	0.00	0.00
160.00	60.00	0.00	0.00	0.00	0.00	0.00	0.00	0.00	0.00	0.00	0.00	0.00	0.00	0.00	0.00	0.00	0.00
160.00	60.00	0.00	0.00	0.00	0.00	0.00	0.00	0.00	0.00	0.00	0.00	0.00	0.00	0.00	0.00	0.00	0.00
160.00	60.00	0.00	0.00	0.00	0.00	0.00	0.00	0.00	0.00	0.00	0.00	0.00	0.00	0.00	0.00	0.00	0.00
160.00	60.00	0.00	0.00	0.00	0.00	0.00	0.00	0.00	0.00	0.00	0.00	0.00	0.00	0.00	0.00	0.00	0.00
160.00	60.00	0.00	0.00	0.00	0.00	0.00	0.00	0.00	0.00	0.00	0.00	0.00	0.00	0.00	0.00	0.00	0.00

Multi-Chem Analytical Laboratory
1553 East Highway 40
Vernal, UT 84078

ATTACHMENT F
4 of 4

multi-chem
A HALLIBURTON SERVICE

These scales have positive scaling potential under initial temperature and pressure: Calcium Carbonate Iron Carbonate

These scales have positive scaling potential under final temperature and pressure: Calcium Carbonate Iron Carbonate

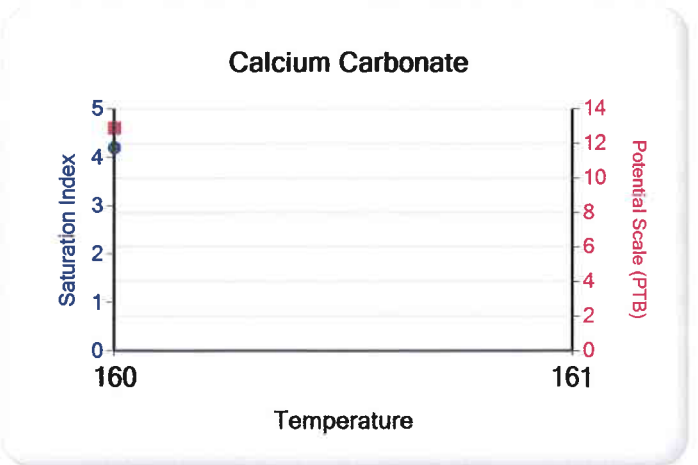

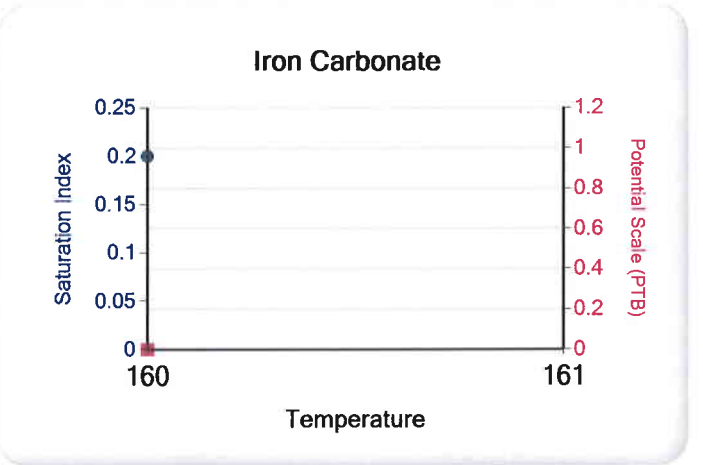

Attachment "G"

Balcron Monument Federal #24-12J-9-16
Proposed Maximum Injection Pressure

Frac Interval (feet) Top	Bottom	Avg. Depth (feet)	ISIP (psi)	Calculated Frac Gradient (psi/ft)	Pmax	
4746	4750	4748	2450	0.95	2419	
5476	5485	5481	1150	0.64	1114	←
4080	4123	4102	1850	0.89	1824	
				Minimum	1114	

Calculation of Maximum Surface Injection Pressure
Pmax = (Frac Grad -(0.433*1.015)) x Depth of Top Perf
where pressure gradient for the fresh water is .433 psi/ft and
specific gravity of the injected water is 1.015.

Frac Gradient = (ISIP +(0.433*Top Perf.))/Top Perf.

Please note: These are existing perforations; additional perforations may be added during the actual conversion procedure.

DAILY OPERATING REPORT

BALCRON MONUMENT FEDERAL #24-12J
Location: SE SW Section 12, T9S, R16E
Duchesne County, Utah

12-10-93 TD: 5,700' (0') Day 7
Formation: Green River
Present Operation: RDMO
WO float collar, run 5-1/2" csg, cmt by Western as follows:

Guide shoe	.60'
1 jt 5-1/2" 15.5# shoe jt	44.18'
float collar	2.10'
128 jts 5-1/2" 15.5# K-55 csg	5629.34'
	5676.22'
Landing jt	9.00'
Csg set @	5685.22'
PBTD	5636.34'

20 centralizers
Cmt by Western with 204 sxs Thrifty lite & tail w/215 sxs 50-50 POZ. Plug down @ 1:30 p.m. 12-9-93. Release rig @ 5:30 p.m. 12-9-93. Set slips, ND BOP, & clean mud tank.
DC: $48,035 CC: $168,393

12-11-93 Completion
MIRU Cannon Well Service Rig #1. NU wellhead, NU BOP. SDFD.
DC: $1,273

12-13-93 Completion
TIH w/4-3/4" bit, 5-1/2" scraper & 181 jts 2-7/8" tbg, tag PBTD @ 5634' KB, circ hole clean w/125 bbls 2% KCL wtr. Pressure test csg & BOP to 1000 psi - OK. TOOH w/tbg & tools. RU Cutter to perf 5476'-85' KB (2 SPF). RD Cutter. TIH w/RBP, retrieving head, 1 jt 2-7/8" tbg, 5-1/2" packer, SN & 176 jts 2-7/8" tbg. Set BP @ 5526' KB, set packer @ 5425' KB, EOT @ 5460' KB. RU Dowell to do HCL break down **refer to treatment report.** TOOH w/tbg 64 jts. SWIFN.
DC: $6,541

12-14-93 Completion
RU Dowell to frac 5476'-85' **refer to treatment report.** Pressure test surface equipment to 4000 psi - OK. Screen out. RD Dowell. SWIFD.
DC: $20,220

12-15-93 Completion
CP - 920 psi. TIH w/retrieving head, 1 jt 2-7/8" tbg, 5-1/2" HD packer, SN, & 109 jts 2-7/8" tbg. Tag sand @ 3394' KB, circ down to 5526' KB. Pull up & set apcker @ 5425' KB. Made 8 swab runs. Recovered 46 BW, heavy sand. SWIFN.
DC: $4,446

ATTACHMENT G-1
2 of 3

DAILY OPERATING REPORT

BALCRON MONUMENT FEDERAL #24-12J
Location: SE SW Section 12, T9S, R16E
Duchesne County, Utah

12-10-93 TD: 5,700' (0') Day 7
Formation: Green River
Present Operation: RDMO
WO float collar, run 5-1/2" csg, cmt by Western as follows:

Guide shoe	.60'
1 jt 5-1/2" 15.5# shoe jt	44.18'
float collar	2.10'
128 jts 5-1/2" 15.5# K-55 csg	5629.34'
	5676.22'
Landing jt	9.00'
Csg set @	5685.22'
PBTD	5636.34'

20 centralizers
Cmt by Western with 204 sxs Thrifty lite & tail w/215 sxs 50-50 POZ. Plug down @ 1:30 p.m. 12-9-93. Release rig @ 5:30 p.m. 12-9-93. Set slips, ND BOP, & clean mud tank.
DC: $48,035 CC: $168,393

12-11-93 Completion
MIRU Cannon Well Service Rig #1. NU wellhead, NU BOP. SDFD.
DC: $1,273

12-13-93 Completion
TIH w/4-3/4" bit, 5-1/2" scraper & 181 jts 2-7/8" tbg, tag PBTD @ 5634' KB, circ hole clean w/125 bbls 2% KCL wtr. Pressure test csg & BOP to 1000 psi - OK. TOOH w/tbg & tools. RU Cutter to perf 5476'-85' KB (2 SPF). RD Cutter. TIH w/RBP, retrieving head, 1 jt 2-7/8" tbg, 5-1/2" packer, SN & 176 jts 2-7/8" tbg. Set BP @ 5526' KB, set packer @ 5425' KB, EOT @ 5460' KB. RU Dowell to do HCL break down **refer to treatment report.** TOOH w/tbg 64 jts. SWIFN.
DC: $6,541

12-14-93 Completion
RU Dowell to frac 5476'-85' **refer to treatment report.** Pressure test surface equipment to 4000 psi - OK. Screen out. RD Dowell. SWIFD.
DC: $20,220

12-15-93 Completion
CP - 920 psi. TIH w/retrieving head, 1 jt 2-7/8" tbg, 5-1/2" HD packer, SN, & 109 jts 2-7/8" tbg. Tag sand @ 3394' KB, circ down to 5526' KB. Pull up & set apcker @ 5425' KB. Made 8 swab runs. Recovered 46 BW, heavy sand. SWIFN.
DC: $4,446

ATTACHMENT G-1

3 & 3

DAILY OPERATING REPORT

BALCRON MONUMENT FEDERAL #24-12J
Location: SE SW Section 12, T9S, R16E
Duchesne County, Utah

12-23-93 Completion

CP - 735 psi, bleed well down. TIH w/retrieving tool, 1 jt 2-7/8" tbg, packer, SN & 124 jts 2-7/8" tbg. Tag sand @ 3890' KB, circ down to 4155' KB (BP), set packer @ 4000' KB, EOT @ 4035' KB. Made 12 swab runs, recovered 72 BW, trace of oil. Last 2 runs, no sand. Release packer, tag sand @ 4130' KB, circ down to 4155' KB, release BP, TOOH w/tbg & tools. TIH w/production string as follows:

	LENGTH	DEPTH KB
1 jt 2-7/8" tbg EUE, J-55 8RD 6.5#	31.42	5550.71'
1 perf sub 2-7/8" x 3'	3.20'	5519.29'
1 seat nipple	1.10'	5516.09'
177 jts 2-7/8" tbg, EUE, J-55 8RD 6.5#	5504.99'	5514.09'
KB (10')		

SWIFN.
DC: $1,647

12-24-93 Completion

ND BOP, NU well head. TIH w/following:
1 BHP 2-1/2" x 1-1/2" x 16' RWAC w/PA plunger (trico)
119 3/4" x 25' plain rods D-61 (Trico)
two 3/4" x 6' ponys
one 1-1/4" x 22' polish rod SM (Trico)
Clamp rods, pressure test pump & tbg to 1000 psi - OK. BHP - #1027 (Trico).
DC: $5,429

12-30-93 Completion

Start unit pumping 4-1/4" stroke, 86" stroke.
DC: $30,330

ATTACHMENT H

WORK PROCEDURE FOR PLUGGING AND ABANDONMENT

1.		Set CIBP @ 4030'
2.	Plug #1	Set 100' plug on top of CIBP using 12 sx Class "G" cement
3.	Plug #2	155' balance plug using 19 sx Class "G" cement 50' above Trona-Bird's Nest extending 50' below base of Mahogany Oil Shale
4.	Plug #3	120' balance plug using 14sx Class "G" cement 60' above Uinta/Green River and extending 60' below
5.		Perforate 4 JSPF @ 329'
6.	Plug #4	Circulate 84 sx Class "G" cement down 5 ½" and up the 5 ½" x 8 5/8" annulus

The approximate cost to plug and abandon this well is $42,000.

ATTACHMENT H-1

Balcron Monument Federal 24-12J-9-16

Spud Date: 11/8/93
Put on Production: 12/30/93
GL: 5495' KB: 5505'

SURFACE CASING

CSG SIZE: 8-5/8"
GRADE: J-55
WEIGHT: 24#
LENGTH: 6jts. (271.28')
DEPTH LANDED: 279'
HOLE SIZE: 12-1/4"
CEMENT DATA: 150 sxs Class "G" cmt

PRODUCTION CASING

CSG SIZE: 5-1/2"
GRADE: J-55
WEIGHT: 15.5#
LENGTH: 129 jts. (5676.22')
HOLE SIZE: 7-7/8"
DEPTH LANDED: 5685.22'
CEMENT DATA: 204 sxs Prem. Lite II mixed & 215 sxs 50/50 POZ.
CEMENT TOP AT: 279'

Proposed P & A
Wellbore Diagram

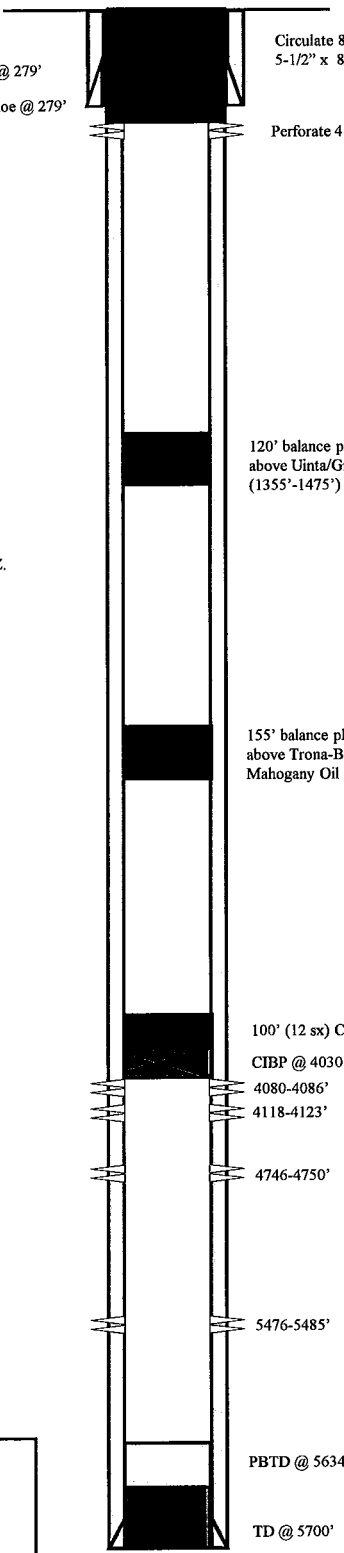

NEWFIELD

Balcron Monument Federal 24-12J-9-16
539' FSL & 1777' FWL
SE/SW Section 12-T9S-R16E
Duchesne Co, Utah
API # 43-013-31409; Lease # U-035521-A

JL 5/22/2012

BEFORE THE DIVISION OF OIL, GAS AND MINING
DEPARTMENT OF NATURAL RESOURCES
STATE OF UTAH
NOTICE OF AGENCY ACTION
CAUSE NO. UIC-396

IN THE MATTER OF THE APPLICATION OF NEWFIELD PRODUCTION COMPANY FOR ADMINISTRATIVE APPROVAL OF CERTAIN WELLS LOCATED IN SECTIONS 9, 11, 12, 13, 16, 17, 18, 21, 22, 24, 27, AND 29, TOWNSHIP 9 SOUTH, RANGE 16 EAST, DUCHESNE COUNTY, UTAH, AS CLASS II INJECTION WELLS.

THE STATE OF UTAH TO ALL PERSONS INTERESTED IN THE ABOVE ENTITLED MATTER.

Notice is hereby given that the Division of Oil, Gas and Mining (the "Division") is commencing an informal adjudicative proceeding to consider the application of Newfield Production Company, 1001 17th Street, Suite 2000, Denver, Colorado 80202, telephone 303-893-0102, for administrative approval of the following wells located in Duchesne County, Utah, for conversion to Class II injection wells:

Greater Monument Butte Unit:

Federal 15-9-9-16 well located in SW/4 SE/4, Section 9, Township 9 South, Range 16 East
API 43-013-33054
Walton Federal 4 well located in SE/4 NW/4, Section 11, Township 9 South, Range 16 East
API 43-013-15795
C-O Govt 1 well located in NW/4 SW/4, Section 12, Township 9 South, Range 16 East
API 43-013-15111
Monument Federal 24-12J well located in SE/4 SW/4, Section 12, Township 9 South, Range 16 East
API 43-013-31409
Federal 15-13-9-16 well located in SW/4 SE/4, Section 13, Township 9 South, Range 16 East
API 43-013-32648
State 1-16-9-16 well located in NE/4 NE/4, Section 16, Township 9 South, Range 16 East
API 43-013-33845
Federal 11-17-9-16 well located in NE/4 SW/4, Section 17, Township 9 South, Range 16 East
API 43-013-33034
Federal 15-18-9-16 well located in SW/4 SE/4, Section 18, Township 9 South, Range 16 East
API 43-013-33001
Federal 5-21-9-16 well located in SW/4 NW/4, Section 21, Township 9 South, Range 16 East
API 43-013-33020
Federal 11A-22-9-16 well located in NE/4 SW/4, Section 22, Township 9 South, Range 16 East
API 43-013-33149
Federal 1-24-9-16 well located in NE/4 NE/4, Section 24, Township 9 South, Range 16 East
API 43-013-33082
Federal 1-27-9-16 well located in NE/4 NE/4, Section 27, Township 9 South, Range 16 East
API 43-013-33350
Federal 3-29-9-16 well located in NE/4 NW/4, Section 29, Township 9 South, Range 16 East
API 43-013-33425

The proceeding will be conducted in accordance with Utah Admin. R649-10, Administrative Procedures.

Selected zones in the Green River Formation will be used for water injection. The maximum requested injection pressures and rates will be determined based on fracture gradient information submitted by Newfield Production Company.

Any person desiring to object to the application or otherwise intervene in the proceeding, must file a written protest or notice of intervention with the Division within fifteen days following publication of this notice. The Division's Presiding Officer for the proceeding is Brad Hill, Permitting Manager, at P.O. Box 145801, Salt Lake City, UT 84114-5801, phone number (801) 538-5340. If such a protest or notice of intervention is received, a hearing will be scheduled in accordance with the aforementioned administrative procedural rules. Protestants and/or interveners should be prepared to demonstrate at the hearing how this matter affects their interests.

Dated this 21st day of June, 2012.

STATE OF UTAH
DIVISION OF OIL, GAS & MINING

Brad Hill
Permitting Manager

Newfield Production Company

FEDERAL 15-9-9-16, WALTON FEDERAL 4, C-O GOVT 1, MONUMENT FEDERAL 24-12J, FEDERAL 15-13-9-16, STATE 1-16-9-16, FEDERAL 11-17-9-16, FEDERAL 15-18-9-16, FEDERAL 5-21-9-16, FEDERAL 11A-22-9-16, FEDERAL 1-24-9-16, FEDERAL 1-27-9-16, FEDERAL 3-29-9-16

Cause No. UIC-396

Publication Notices were sent to the following:

Newfield Production Company
1001 17th Street, Suite 2000
Denver, CO 80202

Uintah Basin Standard
268 South 200 East
Roosevelt, UT 84066
via e-mail ubs@ubstandard.com

Salt Lake Tribune
P O Box 45838
Salt Lake City, UT 84145
via e-mail naclegal@mediaoneutah.com

Vernal Office
Bureau of Land Management
170 South 500 East
Vernal, UT 84078

SITLA
675 E 500 S Ste 500
Salt Lake City, UT 84102-2818

Duchesne County Planning
P O Box 317
Duchesne, UT 84021-0317

Bruce Suchomel
US EPA Region 8
MS 8P-W-GW
1595 Wynkoop Street
Denver, CO 80202-1129

Newfield Production Company
Rt 3 Box 3630
Myton, UT 84052

Jean Sweet

GARY R. HERBERT
Governor
GREGORY S. BELL
Lieutenant Governor

State of Utah
DEPARTMENT OF NATURAL RESOURCES
MICHAEL R. STYLER
Executive Director
Division of Oil, Gas and Mining
JOHN R. BAZA
Division Director

June 21, 2012

Via e-mail: legals@ubstandard.com

Uintah Basin Standard
268 South 200 East
Roosevelt, UT 84066

Subject: Notice of Agency Action – Newfield Production Company Cause No. UIC-396

To Whom It May Concern:

Enclosed is a copy of the referenced Notice of Agency Action. Please publish the Notice, once only, as soon as possible. Please notify me via e-mail of the date it will be published. My e-mail address is: jsweet@utah.gov.

Please send proof of publication and billing to:

Division of Oil, Gas and Mining
PO Box 145801
Salt Lake City, UT 84114-5801

Sincerely,

Jean Sweet

Jean Sweet
Executive Secretary

Enclosure

Jean Sweet - Re: Notice of Agency Action – Newfield Production Company Cause No. UIC-396

From: Cindy Kleinfelter <classifieds@ubstandard.com>
To: Jean Sweet <jsweet@utah.gov>
Date: 6/22/2012 8:05 AM
Subject: Re: Notice of Agency Action – Newfield Production Company Cause No. UIC-396

On 6/21/2012 5:41 PM, Jean Sweet wrote:

> To Whom It May Concern:
>
> Enclosed is a copy of the referenced Notice of Agency Action. Please publish the Notice, once only, as soon as possible. Please notify me via e-mail of the date it will be published. My e-mail address is: jsweet@utah.gov.
>
> Please send proof of publication and billing to:
>
> Division of Oil, Gas and Mining
> PO Box 145801
> Salt Lake City, UT 84114-5801
>
> Sincerely,
>
> Jean Sweet, Executive Secretary
> Utah Div. of Oil, Gas & Mining
> 1594 West Temple, Suite 1210
> Salt Lake City, UT
> 801-538-5329
> jsweet@utah.gov

Received. Thank you. It will run June 26.
Cindy

GARY R. HERBERT
Governor
GREGORY S. BELL
Lieutenant Governor

State of Utah
DEPARTMENT OF NATURAL RESOURCES
MICHAEL R. STYLER
Executive Director
Division of Oil, Gas and Mining
JOHN R. BAZA
Division Director

June 21, 2012

VIA E-MAIL naclegal@mediaoneutah.com

Salt Lake Tribune
P. O. Box 45838
Salt Lake City, UT 84145

Subject: Notice of Agency Action – Newfield Production Company Cause No. UIC-396

To Whom It May Concern:

Enclosed is a copy of the referenced Notice of Agency Action. Please publish the Notice, once only, as soon as possible. Please notify me via e-mail of the date it will be published. My e-mail address is: jsweet@utah.gov.

Please send proof of publication and billing for **account #9001402352** to:

Division of Oil, Gas and Mining
PO Box 145801
Salt Lake City, UT 84114-5801

Sincerely,

Jean Sweet
Executive Secretary

Enclosure

1594 West North Temple, Suite 1210, PO Box 145801, Salt Lake City, UT 84114 -5801
telephone (801) 538-5340 • facsimile (801) 359-3940 • TTY (801) 538-7458 • *www.ogm.utah.gov*

UTAH DNR OIL, GAS & MINING

From: "Fultz, Mark" <naclegal@mediaoneutah.com>
To: <jsweet@utah.gov>
Date: 6/22/2012 9:04 AM
Subject: Legal Notice - UIC 396
Attachments: OrderConf.pdf

AD# 802908
Run Trib/DNews - 6/26
Cost $393.08
Thank you
Mark

The Salt Lake Tribune | MEDIAOne of Utah | Deseret News

Remit to: P.O. Box 704005
West Valley City, UT 84170

Order Confirmation for Ad #0000802908-01

Client	DIV OF OIL-GAS & MINING	**Payor Customer**	DIV OF OIL-GAS & MINING
Client Phone	801-538-5340	**Payor Phone**	801-538-5340
Account#	9001402352	**Payor Account**	9001402352
Address	1594 W NORTH TEMP #1210,P.O. BOX 145801 SALT LAKE CITY, UT 84114 USA	**Payor Address**	1594 W NORTH TEMP #1210,P.O. BO) SALT LAKE CITY, UT 84114
Fax	801-359-3940	**Ordered By**	**Acct. Exec**
EMail	earlenerussell@utah.gov	Jean	mfultz

Total Amount	**$393.08**
Payment Amt	**$0.00**
Amount Due	**$393.08**

Tear Sheets	Proofs	Affidavits
0	0	1

Payment Method

PO Number UIC 396

Confirmation Notes:

Text: Jean

Ad Type	Ad Size	Color
Legal Liner	3.0 X 77 Li	<NONE>

Product	Placement	Position
Salt Lake Tribune::	Legal Liner Notice - 0998	Public Meeting/Hear-ing Notices
Scheduled Date(s):	06/26/2012	
Product	**Placement**	**Position**
Deseret News::	Legal Liner Notice - 0998	Public Meeting/Hear-ing Notices
Scheduled Date(s):	06/26/2012	
Product	**Placement**	**Position**
sltrib.com::	Legal Liner Notice - 0998	Public Meeting/Hear-ing Notices
Scheduled Date(s):	06/26/2012	
Product	**Placement**	**Position**
utahlegals.com::	utahlegals.com	utahlegals.com
Scheduled Date(s):	06/26/2012	

Order Confirmation for Ad #0000802908-01

Ad Content Proof Actual Size

Order Confirmation
for Ad #0000802908-01

Ad Content Proof 135%

BEFORE THE DIVISION OF OIL, GAS AND MINING
DEPARTMENT OF NATURAL RESOURCES
STATE OF UTAH
NOTICE OF AGENCY ACTION
CAUSE NO. UIC-396

IN THE MATTER OF THE APPLICATION OF NEWFIELD PRODUCTION COMPANY FOR ADMINISTRATIVE APPROVAL OF CERTAIN WELLS LOCATED IN SECTIONS 9, 11, 12, 13, 16, 17, 18, 21, 22, 24, 27, AND 29, TOWNSHIP 9 SOUTH, RANGE 16 EAST, DUCHESNE COUNTY, UTAH, AS CLASS II INJECTION WELLS.

THE STATE OF UTAH TO ALL PERSONS INTERESTED IN THE ABOVE ENTITLED MATTER.

Notice is hereby given that the Division of Oil, Gas and Mining (the "Division") is commencing an informal adjudicative proceeding to consider the application of Newfield Production Company, 1001 17th Street, Suite 2000, Denver, Colorado 80202, telephone 303-893-0102, for administrative approval of the following wells located in Duchesne County, Utah, for conversion to Class II injection wells:

Greater Monument Butte Unit:

Federal 15-9-9-16 well located in SW/4 SE/4, Section 9, Township 9 South, Range 16 East
API 43-013-33054
Walton Federal 4 well located in SE/4 NW/4, Section 11, Township 9 South, Range 16 East
API 43-013-15795
C-O Govt 1 well located in NW/4 SW/4, Section 12, Township 9 South, Range 16 East
API 43-013-15111
Monument Federal 24-12J well located in SE/4 SW/4, Section 12, Township 9 South, Range 16 East
API 43-013-31409
Federal 15-13-9-16 well located in SW/4 SE/4, Section 13, Township 9 South, Range 16 East
API 43-013-32648
State 1-16-9-16 well located in NE/4 NE/4, Section 16, Township 9 South, Range 16 East
API 43-013-33845
Federal 11-17-9-16 well located in NE/4 SW/4, Section 17, Township 9 South, Range 16 East
API 43-013-33034
Federal 15-18-9-16 well located in SW/4 SE/4, Section 18, Township 9 South, Range 16 East
API 43-013-33001
Federal 5-21-9-16 well located in SW/4 NW/4, Section 21, Township 9 South, Range 16 East
API 43-013-33020
Federal 11A-22-9-16 well located in NE/4 SW/4, Section 22, Township 9 South, Range 16 East
API 43-013-33149
Federal 1-24-9-16 well located in NE/4 NE/4, Section 24, Township 9 South, Range 16 East
API 43-013-33082
Federal 1-27-9-16 well located in NE/4 NE/4, Section 27, Township 9 South, Range 16 East
API 43-013-33350
Federal 3-29-9-16 well located in NE/4 NW/4, Section 29, Township 9 South, Range 16 East
API 43-013-33425

The proceeding will be conducted in accordance with Utah Admin. R649-10, Administrative Procedures.

Selected zones in the Green River Formation will be used for water injection. The maximum requested injection pressures and rates will be determined based on fracture gradient information submitted by Newfield Production Company.

Any person desiring to object to the application or otherwise intervene in the proceeding, must file a written protest or notice of intervention with the Division within fifteen days following publication of this notice. The Division's Presiding Officer for the proceeding is Brad Hill, Permitting Manager, at P.O. Box 145801, Salt Lake City, UT 84114-5801, phone number (801) 538-5340. If such a protest or notice of intervention is received, a hearing will be scheduled in accordance with the aforementioned administrative procedural rules. Protestants and/or interveners should be prepared to demonstrate at the hearing how this matter affects their interests.

Dated this 21st day of June, 2012.
STATE OF UTAH
DIVISION OF OIL, GAS & MINING
/s/
Brad Hill
Permitting Manager
802908 **UPAXLP**

Duchesne County Planning, Zoning
& Community Development
734 North Center Street
P.O. Box 317
Duchesne, Utah 84021
(435) 738-1152
Fax (435) 738-5522

June 26, 2012

Mr. Brad Hill, Permitting Manager
Division of Oil, Gas and Mining
PO Box 145801
Salt Lake City, UT 84114-5801

RE: Newfield Production Company Injection Wells (Causes No UIC-395 & 396)

Dear Mr. Hill:

We are in receipt of your notice regarding Newfield Production Company's request to convert 30 wells, located in Sections 5, 8, 9, 11, 12, 13, 16, 17, 18, 19, 21, 22, 23, 24, 27, 29 and 30, Township 9 South, Range 16 East, Duchesne County, to Class II injection wells.

Duchesne County is supportive of this request and recommends approval under conditions that your agency deems appropriate.

Thank you for the opportunity to comment.

Sincerely,

Mike Hyde, AICP
Community Development Administrator

pc: Newfield Production Company, Rt. 3, Box 3630, Myton, UT 84052

P:\Mike\DOGM Correspondence\Newfield Injection Wells26.doc

Send Payments to:
Uintah Basin Standard
268 S 200 E
Roosevelt, Utah 84066

Phone: 435-722-5131
Fax: 435-722-4140

Uintah Basin Standard
www.ubstandard.com

Vernal Express
www.vernal.com

Invoice Number	Invoice Date
32048	6/26/2012

Advertiser No.	Invoice Amount	Due Date
2080	$157.05	7/26/2012

RECEIVED
JUL 09 2012
DIV. OF OIL, GAS & MINING

DIVISION OF OIL GAS & MINING
Rose Nolton
1594 W. N.TEMPLE STE 121
PO BOX 145801
SALT LAKE CITY, UT 84114-5801

1 1/2% fee will be charged to all past due balances.

Amount Enclosed

Please detach top portion and return with your payment

INVOICE

Uintah Basin Standard — DIVISION OF OIL GAS & MINING — Invoice No. 32048 — 6/26/2012

Date	Order		Description		Ad Size	SubTotal	Sales Tax	Amount
6/26/2012	16066	UBS	UBS Legal Notice: Notice of Agcy Actn: Cause No. UIC-396 Pub. June 26, 2012					$157.05
							Sub Total:	$157.05
					Total Transactions: 1		Total:	$157.05

SUMMARY **Advertiser No.** 2080 **Invoice No.** 32048

1 1/2% fee will be charged to all past due balances.

Thank You for your business!

Thank you for advertising with us, we appreciate your business!

AFFIDAVIT OF PUBLICATION

County of Duchesne,
STATE OF UTAH

I, Kevin Ashby on oath, say that I am the PUBLISHER of the Uintah Basin Standard, a weekly newspaper of general circulation, published at Roosevelt, State and County aforesaid, and that a certain notice, a true copy of which is hereto attached, was published in the full issue such newspaper for 1 consecutive issues, and that the first publication was on the 26 day of June, 2012, and that the last publication of such notice was in the issue of such newspaper dated the 26 day of June, 2012, and that said notice was published on Utahlegals.com on the same day as the first newspaper publication and the notice remained on Utahlegals.com until the end of the scheduled run.

Kevin Ashby
Publisher

Subscribed and sworn to before me on this

5 day of July, 2012

by Kevin Ashby

Bonnie Parrish
Notary Public

Notary Public
BONNIE PARRISH
Commission #863427
My Commission Expires
February 23, 2016
State of Utah

NOTICE OF AGENCY ACTION CAUSE NO. UIC-396

BEFORE THE DIVISION OF OIL, GAS AND MINING, DEPARTMENT OF NATURAL RESOURCES, STATE OF UTAH.

IN THE MATTER OF THE APPLICATION OF NEWFIELD PRODUCTION COMPANY FOR ADMINISTRATIVE APPROVAL OF CERTAIN WELLS LOCATED IN SECTIONS 9, 11, 12, 13, 16, 17, 18, 21, 22, 24, 27, AND 29, TOWNSHIP 9 SOUTH, RANGE 16 EAST, DUCHESNE COUNTY, UTAH, AS CLASS II INJECTION WELLS.

THE STATE OF UTAH TO ALL PERSONS INTERESTED IN THE ABOVE ENTITLED MATTER.

Notice is hereby given that the Division of Oil, Gas and Mining (the "Division") is commencing an informal adjudicative proceeding to consider the application of Newfield Pr ... Com pany, 1(Suite : Colora phone for ad proval wells I esne C conve inject Gr Butte Fe well SE/4 ship East Al W well NW Tow Ran A C loca Sec Sou A 24- SE 12, Ra

HORROCKS EN- GINEERS, 2162 WEST GROVE PARKWAY SUITE #400, PLEASANT GROVE, UTAH 84062 or HORROCKS ENGINEERS (PROJECT OFFICE), 157 SOUTH 300 EAST, ROOSEVELT, UTAH 84066 Copies of the CONTRACT DOCUMENTS may be obtained on Tuesday, June 19, 2012, at the office of Horrocks Engineers located at 2162 West Grove Parkway Suite #400, Pleasant Grove, UT 84062 or Horrocks Engineers Roosevelt Office located at 157 South 300 East, Roosevelt, UT 84066, upon payment of $50.00 for each set, none of which will be refunded. The ENGINEER is Horrocks Engineers,

lations at 2 Strawberry River crossing locations. The project also includes approximately 166 residential services, 35 hydrants; 5-12" Gate Valves, 43-10" Gate Valves, and 74-8" Gate Valves. The project will also include gravel driveway repair, gravel shoulder repair, approximately 4,900 square yards of asphalt repair, landscape restoration, etc.

Project is to be completed within 180 calendar days from Notice to Proceed.

The CONTRACT DOCUMENTS, consisting of Advertisement for Bids, Information for Bidders, Bid Bond, Agreement, Payment Bond, Performance Bond, Notice of Award, Notice to Proceed, Change Order, General Conditions, Supplemental General Conditions, Status Verification System Affidavit, Certificate of Non-Collusion, Drawings, and Addenda, may be examined at the following locations on Tuesday, June 19, 2012:

DIVISION OF OIL, GAS AND MINING
UNDERGROUND INJECTION CONTROL PROGRAM
PERMIT
STATEMENT OF BASIS

Applicant: Newfield Production Company **Well:** Monument Federal 24-12J-9-16

Location: 12/9S/16E **API:** 43-013-31409

Ownership Issues: The proposed well is located on BLM land. The well is located in the Greater Monument Butte Unit. Lands in the one-half mile radius of the well are administered by the BLM. The Federal Government is the mineral owner within the area of review (AOR). Newfield and other various individuals hold the leases in the unit. Newfield has provided a list of all surface, mineral and lease holders in the half-mile radius. Newfield is the operator of the Greater Monument Butte Unit. Newfield has submitted an affidavit stating that all owners and interest owners have been notified of their intent.

Well Integrity: The proposed well has surface casing set at 279 feet and has a cement top at the surface. A 5½ inch production casing is set at 5,685 feet. Although the cement bond log is inconclusive, calculations based on the cement reported in the well completion report indicate adequate bond in this well up to about 3,630 feet (calculated top of "lite" cement). A 2 7/8 inch tubing with a packer is proposed at 4,030 feet, but will need to be adjusted downward. A mechanical integrity test will be run on the well prior to injection. Based on surface locations, there are 9 producing wells, 4 injection wells, 1 shut-in well, and 1 recent P/A well (previously operations suspended, abandoned 9/19/2012) in the AOR. One of the producing wells is directionally drilled, with a surface location inside the AOR and a bottom hole location outside the AOR. In addition, there are 2 directionally drilled producing wells with surface locations outside the AOR and bottom hole locations inside the AOR. Finally, there is 1 approved surface location inside the AOR from which a directional well will be drilled to a bottom hole location outside the AOR. Many of the existing wells in the AOR have evidence of adequate casing and cement for the proposed injection interval. However, there are five wells which are dubious in that respect. The most limiting of these wells is the C-O Govt 1 well (API# 43-013-15111). Its CBL (11/28/1964) indicates a cement top at about 4,886 feet. To protect this wellbore Newfield will not perforate the Monument Federal 24-12J-9-16 well above 4,980 feet (see next paragraph). Also, because of the questionable quality of the light cement in the Federal 21-13Y well (43-013-31400) and the Monument Federal 41-14J well (43-013-31408), Newfield will also be required to regularly monitor the pressure between the surface casing and production casing in these two wells.

Revision (07/18/2013): In preparation for cement remediation in the C&O Govt #1 well, Newfield had a new CBL run by The Perforators, LLC on 6/18/2013. It was discovered that cement remediation had been done by a previous operator, but the Utah DOGM was apparently not notified, nor was an updated CBL submitted. The new CBL run for Newfield indicates

generally good cement up to a depth of 4100 feet and a higher interval of fairly good cement between 2682 and 2814 feet. Newfield recently completed cement remediation in the C&O Govt #2 well (43-013-15112). Subsequently, a new CBL was run by The Perforators, LLC on 7/10/2013. The new CBL indicates generally good cement between 3890 and 4072 feet, as well as between 3114 and 3342 feet. Inasmuch as these two wells were the principal obstacles to granting Newfield's requested injection interval (3,889'-5,634') in the Monument Federal 24-12J well, DOGM is prepared to raise the permitted injection top to 4,070', which includes all existing perforations.

Ground Water Protection: As interpreted from the Utah Geological Survey's DOE Project-Uinta Basin Water Draft Map (Paul B. Anderson, December 2, 2011), the base of moderately saline water (3000-10,000 mg/l TDS) is at a depth of approximately 1700 feet. The requested injection interval is between 3,889 feet and 5,634 feet in the Green River Formation. (See **Revision** 7/18/2013 above) However, as described in the previous paragraph, the top of good cement bond is at about 4,886 feet in the C-O Govt 1 well, located within the AOR, about 1/3 mile northwest of Monument Federal 24-12J-9-16 well. For this reason, it is recommended that the top of the injection interval be permitted no higher than a depth of 4,980 feet in the proposed injection well. Information submitted by Newfield indicates that the fracture gradient for the 24-12J-9-16 well is 0.64 psi/ft., which was the lowest reported fracture gradient for the injection zone. The resulting minimum fracture pressure for the proposed injection interval is 1,114 psig. The requested maximum pressure is 1,114 psig. The anticipated average injection pressure is 1100 psig. Injection at this pressure should not initiate any new fractures or propagate existing fractures in the adjacent confining intervals. Any ground water present should be adequately protected.

Oil/Gas& Other Mineral Resources Protection: The Board of Oil, Gas & Mining approved the Greater Monument Butte Unit on December 1, 2009. Correlative rights issues were addressed at this time. Previous reviews in this area indicate that other mineral resources in the area have been protected or are not at issue.

Bonding: Bonded with the BLM

Actions Taken and Further Approvals Needed: A notice of agency action has been sent to the Salt Lake Tribune and the Uinta Basin Standard. A casing/tubing pressure test will be required prior to injection. It is recommended that approval of this application be granted.

Note: Applicable technical publications concerning water resources in the general vicinity of this project have been reviewed and taken into consideration during the permit review process.

Reviewer(s): Mark Reinbold Date: 10/4/2012 (rev. 7/18/2013)

GARY R. HERBERT
Governor
GREGORY S. BELL
Lieutenant Governor

State of Utah

DEPARTMENT OF NATURAL RESOURCES
MICHAEL R. STYLER
Executive Director
Division of Oil, Gas and Mining
JOHN R. BAZA
Division Director

December 17, 2012

Newfield Production Company
1001 Seventeenth Street, Suite 2000
Denver, CO 80202

Subject: Greater Monument Butte Unit Well: Monument Federal 24-12J, Section 12, Township 9 South, Range 16 East, SLBM, Duchesne County, Utah, API Well # 43-013-31409

Gentlemen:

Pursuant to Utah Admin. Code R649-5-3-3, the Division of Oil, Gas and Mining (the "Division") issues its administrative approval for conversion of the referenced well to a Class II injection well. Accordingly, the following stipulations shall apply for full compliance with this approval:

1. Compliance with all applicable requirements for the operation, maintenance and reporting for Underground Injection Control ("UIC") Class II injection wells pursuant to Utah Admin. Code R649-1 et seq.

2. Conformance with all conditions and requirements of the complete application submitted by Newfield Production Company.

3. A casing\tubing pressure test shall be conducted prior to commencing injection.

4. Pressure shall be monitored between the surface casing and the production casing on a regular basis. Any pressure changes observed shall be reported to the Division immediately.

5. Because of questionable quality of light cement in the Monument Federal 41-14J (API # 43-013-31408) well and the Federal 21-13Y (API # 43-013-31400), located within the Area of Review, pressure shall be monitored in these wells between the surface casing and the production casing on a regular basis. Any pressure changes observed shall be reported to the Division immediately.

6. The top of the injection interval shall be limited to a depth no higher than **4,980** feet in the Monument Federal 24-12J well.

1594 West North Temple, Suite 1210, PO Box 145801, Salt Lake City, UT 84114-5801
telephone (801) 538-5340 • facsimile (801) 359-3940 • TTY (801) 538-7458 • *www.ogm.utah.gov*

UTAH DNR OIL, GAS & MINING

A final approval to commence injection will be issued upon satisfactory completion of the listed stipulations. If you have any questions regarding this approval or the necessary requirements, please contact Mark Reinbold at 801-538-5333 or Brad Hill at 801-538-5315.

Sincerely,

John Rogers
Associate Director

JR/MLR/js
cc: Bruce Suchomel, Environmental Protection Agency
Bureau of Land Management, Vernal
Duchesne County
Newfield Production Company, Myton
Well File
N:\O&G Reviewed Docs\ChronFile\UIC

GARY R. HERBERT
Governor
GREGORY S. BELL
Lieutenant Governor

State of Utah

DEPARTMENT OF NATURAL RESOURCES
MICHAEL R. STYLER
Executive Director
Division of Oil, Gas and Mining
JOHN R. BAZA
Division Director

December 17, 2012
Revised July 23, 2013

Newfield Production Company
1001 Seventeenth Street, Suite 2000
Denver, CO 80202

Subject: Greater Monument Butte Unit Well: Monument Federal 24-12J, Section 12, Township 9 South, Range 16 East, SLBM, Duchesne County, Utah, API Well # 43-013-31409

Gentlemen:

Pursuant to Utah Admin. Code R649-5-3-3, the Division of Oil, Gas and Mining (the "Division") issues its administrative approval for conversion of the referenced well to a Class II injection well. Accordingly, the following stipulations shall apply for full compliance with this approval:

1. Compliance with all applicable requirements for the operation, maintenance and reporting for Underground Injection Control ("UIC") Class II injection wells pursuant to Utah Admin. Code R649-1 et seq.

2. Conformance with all conditions and requirements of the complete application submitted by Newfield Production Company.

3. A casing\tubing pressure test shall be conducted prior to commencing injection.

4. Pressure shall be monitored between the surface casing and the production casing on a regular basis. Any pressure changes observed shall be reported to the Division immediately.

5. Because of questionable quality of light cement in the Monument Federal 41-14J (API # 43-013-31408) well and the Federal 21-13Y (API # 43-013-31400), located within the Area of Review, pressure shall be monitored in these wells between the surface casing and the production casing on a regular basis. Any pressure changes observed shall be reported to the Division immediately.

6. The top of the injection interval shall be limited to a depth no higher than ~~4,980 feet~~ **revised to 4,070 feet** in the Monument Federal 24-12J well.

A final approval to commence injection will be issued upon satisfactory completion of the listed stipulations. If you have any questions regarding this approval or the necessary requirements, please contact Mark Reinbold at 801-538-5333 or Brad Hill at 801-538-5315.

Sincerely,

John Rogers
Associate Director

JR/BGH/MLR/js
cc: Bruce Suchomel, Environmental Protection Agency
Bureau of Land Management, Vernal
Duchesne County
Newfield Production Company, Myton
Well File
N:\O&G Reviewed Docs\ChronFile\UIC

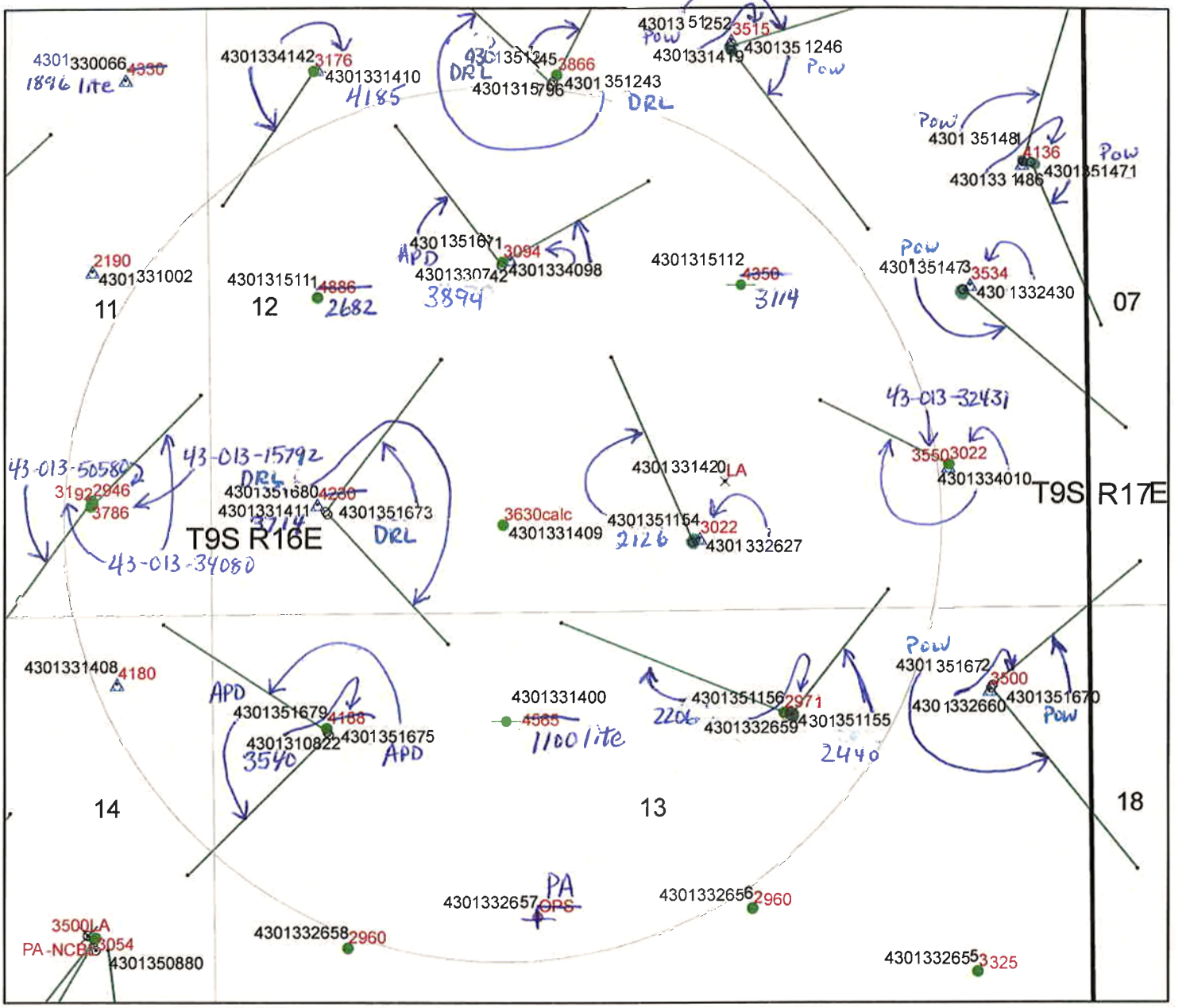

Cement Bond Tops
MONUMENT FEDERAL 24-12J-9-16
API #43-013-31409
UIC 396.4
(revised 7/18/2013)

Legend

- Buffer_of_SGID93_ENERGY_DNROilGasWells_137
- SGID93 ENERGY.DNROilGasWells

SGID93.ENERGY.DNROilGasWells
GIS_STAT_TYPE

- APD
- DRL
- GIW
- GSW
- LA
- LOC
- OPS
- PA
- PGW
- POW
- RET
- SGW
- SOW
- TA
- TW
- WDW
- WIW
- WSW
- SGID93 BOUNDARIES Counties
- SGID93 ENERGY.DNROilGasWells_HDBottom
- SGID93 ENERGY.DNROilGasWells_HDPath
- Wells-CbltopsMaster08_31_12

0 0.05 0.1 0.2 0.3 0.4 Miles

N

1870calc = approx cement top calculated from well completion report

GARY R. HERBERT
Governor
SPENCER J. COX
Lieutenant Governor

State of Utah

DEPARTMENT OF NATURAL RESOURCES
MICHAEL R. STYLER
Executive Director
Division of Oil, Gas and Mining
JOHN R. BAZA
Division Director

UNDERGROUND INJECTION CONTROL PERMIT
Cause No. UIC-396

Operator: Newfield Production Company
Well: Monument Federal 24-12J
Location: Section 12, Township 9 South, Range 16 East
County: Duchesne
API No.: 43-013-31409
Well Type: Enhanced Recovery (waterflood)

Stipulations of Permit Approval

1. Approval for conversion to Injection Well issued on December 17, 2012 (revised July 23, 2013).

2. Maximum Allowable Injection Pressure: 1,114 psig

3. Maximum Allowable Injection Rate: (restricted by pressure limitation)

4. Injection Interval: Green River Formation (4,070' – 5,634')

5. Because of questionable quality of light cement in the Monument Federal 41-14J (API # 43-013-31408) well and the Federal 21-13Y (API # 43-013-31400), located within the Area of Review, pressure shall be monitored in these wells between the surface casing and the production casing on a regular basis. Any pressure changes observed shall be reported to the Division immediately.

6. Any subsequent wells drilled within a ½ mile radius of this well shall have production casing cement brought up to or above the top of the unitized interval for the Greater Monument Butte Unit.

Approved by: _____ 1/13/2014
John Rogers
Associate Director
Date

JR/MLR/js
cc: Bruce Suchomel, Environmental Protection Agency
Bureau of Land Management, Vernal
Jill Loyle, Newfield Production Company, Denver
Newfield Production Company, Myton
Duchesne County
Well File
N:\O&G Reviewed Docs\ChronFile\UIC

UTAH DNR OIL, GAS & MINING

STATE OF UTAH
DEPARTMENT OF NATURAL RESOURCES
DIVISION OF OIL, GAS, AND MINING

FORM 9

5.LEASE DESIGNATION AND SERIAL NUMBER: U-035521-A

SUNDRY NOTICES AND REPORTS ON WELLS

Do not use this form for proposals to drill new wells, significantly deepen existing wells below current bottom-hole depth, reenter plugged wells, or to drill horizontal laterals. Use APPLICATION FOR PERMIT TO DRILL form for such proposals.

6. IF INDIAN, ALLOTTEE OR TRIBE NAME:

7.UNIT or CA AGREEMENT NAME: GMBU (GRRV)

1. TYPE OF WELL Water Injection Well

8. WELL NAME and NUMBER: MONUMENT FED 24-12J

2. NAME OF OPERATOR: NEWFIELD PRODUCTION COMPANY

9. API NUMBER: 43013314090000

3. ADDRESS OF OPERATOR: Rt 3 Box 3630 , Myton, UT, 84052

PHONE NUMBER: 435 646-4825 Ext

9. FIELD and POOL or WILDCAT: MONUMENT BUTTE

4. LOCATION OF WELL
FOOTAGES AT SURFACE: 0539 FSL 1777 FWL
QTR/QTR, SECTION, TOWNSHIP, RANGE, MERIDIAN: Qtr/Qtr: SESW Section: 12 Township: 09.0S Range: 16.0E Meridian: S

COUNTY: DUCHESNE

STATE: UTAH

11. CHECK APPROPRIATE BOXES TO INDICATE NATURE OF NOTICE, REPORT, OR OTHER DATA

TYPE OF SUBMISSION	TYPE OF ACTION		
☐ NOTICE OF INTENT Approximate date work will start:	☐ ACIDIZE	☐ ALTER CASING	☐ CASING REPAIR
✓ SUBSEQUENT REPORT Date of Work Completion: 11/20/2014	☐ CHANGE TO PREVIOUS PLANS	☐ CHANGE TUBING	☐ CHANGE WELL NAME
☐ SPUD REPORT Date of Spud:	☐ CHANGE WELL STATUS	☐ COMMINGLE PRODUCING FORMATIONS	☐ CONVERT WELL TYPE
☐ DRILLING REPORT Report Date:	☐ DEEPEN	☐ FRACTURE TREAT	☐ NEW CONSTRUCTION
	☐ OPERATOR CHANGE	☐ PLUG AND ABANDON	☐ PLUG BACK
	☐ PRODUCTION START OR RESUME	☐ RECLAMATION OF WELL SITE	☐ RECOMPLETE DIFFERENT FORMATION
	☐ REPERFORATE CURRENT FORMATION	☐ SIDETRACK TO REPAIR WELL	☐ TEMPORARY ABANDON
	☐ TUBING REPAIR	☐ VENT OR FLARE	☐ WATER DISPOSAL
	☐ WATER SHUTOFF	☐ SI TA STATUS EXTENSION	☐ APD EXTENSION
	☐ WILDCAT WELL DETERMINATION	✓ OTHER	OTHER: Step Rate Test

12. DESCRIBE PROPOSED OR COMPLETED OPERATIONS. Clearly show all pertinent details including dates, depths, volumes, etc.

A step rate test was conducted on the subject well on 11/20/2014. Results from the test indicate that the fracture gradient is 0.765 psi/ft. Therefore, Newfield is requesting that the maximum allowable injection pressure (MAIP) be changed from 1114 psi to 1330 psi.

Accepted by the Utah Division of Oil, Gas and Mining

Date: August 25, 2015

By:

NAME (PLEASE PRINT)	PHONE NUMBER	TITLE
Lucy Chavez-Naupoto	435 646-4874	Water Services Technician
SIGNATURE N/A		**DATE** 8/24/2015

RECEIVED: Aug. 24, 2015

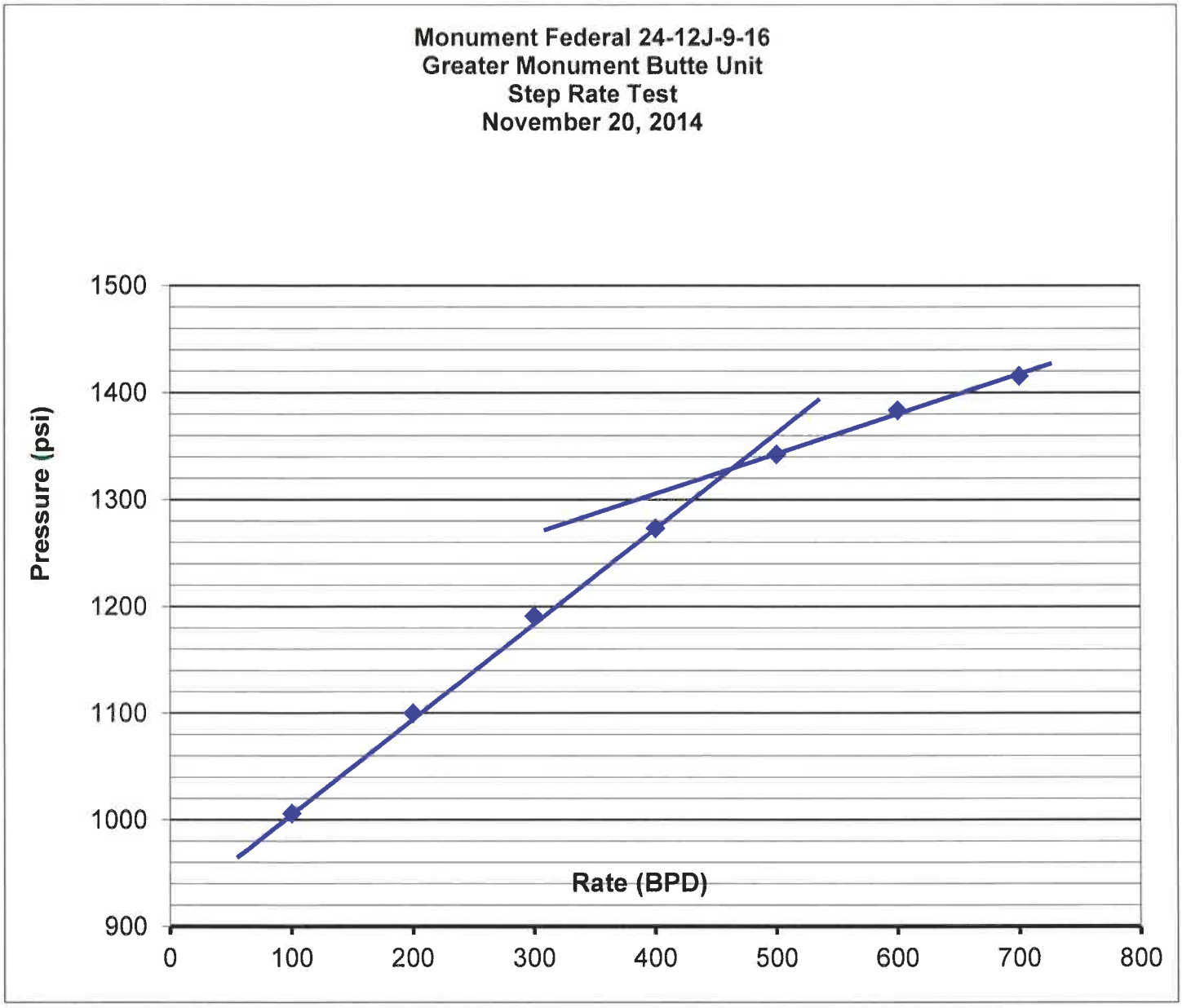

Start Pressure:	960	psi
Top Perforation:	4080	feet
Fracture pressure (Pfp):	1330	psi
FG:	0.765	psi/ft

Step	Rate(bpd)	Pressure(psi)
1	100	1006
2	200	1100
3	300	1191
4	400	1273
5	500	1342
6	600	1383
7	700	1415

Sundry Number: 65682 API Well Number: 43013314090000

Monument Federal 24-12J-9-16 SRT Data (11-20-14)

11/25/2014 2:36:09 PM

Date	Time	Time Zone	N87695 Absolute Pressure (psi)
11/20/2014	9:30:01 AM	-07:00	962.0
11/20/2014	9:35:01 AM	-07:00	961.8
11/20/2014	9:40:01 AM	-07:00	961.6
11/20/2014	9:45:01 AM	-07:00	961.8
11/20/2014	9:50:01 AM	-07:00	961.4
11/20/2014	9:55:01 AM	-07:00	960.8
11/20/2014	10:00:01 AM	-07:00	960.4
11/20/2014	10:05:01 AM	-07:00	976.0
11/20/2014	10:10:01 AM	-07:00	983.6
11/20/2014	10:15:01 AM	-07:00	990.0
11/20/2014	10:20:01 AM	-07:00	996.2
11/20/2014	10:25:01 AM	-07:00	1001.6
11/20/2014	10:30:01 AM	-07:00	1006.2
11/20/2014	10:35:01 AM	-07:00	1040.0
11/20/2014	10:40:01 AM	-07:00	1061.6
11/20/2014	10:45:01 AM	-07:00	1074.4
11/20/2014	10:50:01 AM	-07:00	1081.4
11/20/2014	10:55:01 AM	-07:00	1090.8
11/20/2014	11:00:01 AM	-07:00	1100.2
11/20/2014	11:05:01 AM	-07:00	1126.4
11/20/2014	11:10:01 AM	-07:00	1148.6
11/20/2014	11:15:01 AM	-07:00	1161.2
11/20/2014	11:20:01 AM	-07:00	1173.0
11/20/2014	11:25:01 AM	-07:00	1182.8
11/20/2014	11:30:01 AM	-07:00	1190.6
11/20/2014	11:35:01 AM	-07:00	1213.2
11/20/2014	11:40:01 AM	-07:00	1228.4
11/20/2014	11:45:01 AM	-07:00	1244.4
11/20/2014	11:50:01 AM	-07:00	1254.6
11/20/2014	11:55:01 AM	-07:00	1266.4
11/20/2014	12:00:02 PM	-07:00	1273.2
11/20/2014	12:05:01 PM	-07:00	1295.4
11/20/2014	12:10:01 PM	-07:00	1309.6
11/20/2014	12:15:01 PM	-07:00	1321.2
11/20/2014	12:20:01 PM	-07:00	1329.8
11/20/2014	12:25:01 PM	-07:00	1335.2
11/20/2014	12:30:01 PM	-07:00	1341.8
11/20/2014	12:35:01 PM	-07:00	1353.8
11/20/2014	12:40:01 PM	-07:00	1361.6
11/20/2014	12:45:01 PM	-07:00	1369.4
11/20/2014	12:50:01 PM	-07:00	1373.2
11/20/2014	12:55:01 PM	-07:00	1378.2
11/20/2014	1:00:01 PM	-07:00	1382.6
11/20/2014	1:05:01 PM	-07:00	1393.0
11/20/2014	1:10:01 PM	-07:00	1399.0
11/20/2014	1:15:01 PM	-07:00	1402.8
11/20/2014	1:20:01 PM	-07:00	1407.0
11/20/2014	1:25:01 PM	-07:00	1410.4
11/20/2014	1:30:01 PM	-07:00	1415.4

Monument Federal 24-12J-9-16 ISIP Data (11-20-14)

11/25/2014 2:36:56 PM

Date	Time	Time Zone	N87695 Absolute Pressure (psi)
11/20/2014	1:30:21 PM	-07:00	1416.2
11/20/2014	1:31:21 PM	-07:00	1391.0
11/20/2014	1:32:21 PM	-07:00	1382.0
11/20/2014	1:33:21 PM	-07:00	1374.8
11/20/2014	1:34:21 PM	-07:00	1367.8
11/20/2014	1:35:21 PM	-07:00	1361.6
11/20/2014	1:36:21 PM	-07:00	1356.2
11/20/2014	1:37:21 PM	-07:00	1350.8
11/20/2014	1:38:21 PM	-07:00	1346.2
11/20/2014	1:39:21 PM	-07:00	1341.8
11/20/2014	1:40:21 PM	-07:00	1337.8
11/20/2014	1:41:21 PM	-07:00	1333.8
11/20/2014	1:42:21 PM	-07:00	1330.0
11/20/2014	1:43:22 PM	-07:00	1326.6
11/20/2014	1:44:22 PM	-07:00	1322.6
11/20/2014	1:45:22 PM	-07:00	1319.2
11/20/2014	1:46:22 PM	-07:00	1316.2
11/20/2014	1:47:22 PM	-07:00	1312.6
11/20/2014	1:48:22 PM	-07:00	1311.0
11/20/2014	1:49:23 PM	-07:00	1308.6
11/20/2014	1:50:23 PM	-07:00	1305.8
11/20/2014	1:51:23 PM	-07:00	1303.8
11/20/2014	1:52:23 PM	-07:00	1301.6
11/20/2014	1:53:23 PM	-07:00	1298.8
11/20/2014	1:54:23 PM	-07:00	1296.6
11/20/2014	1:55:23 PM	-07:00	1294.4
11/20/2014	1:56:23 PM	-07:00	1292.6
11/20/2014	1:57:24 PM	-07:00	1290.2
11/20/2014	1:58:23 PM	-07:00	1288.6
11/20/2014	1:59:24 PM	-07:00	1286.8
11/20/2014	2:00:23 PM	-07:00	1284.8

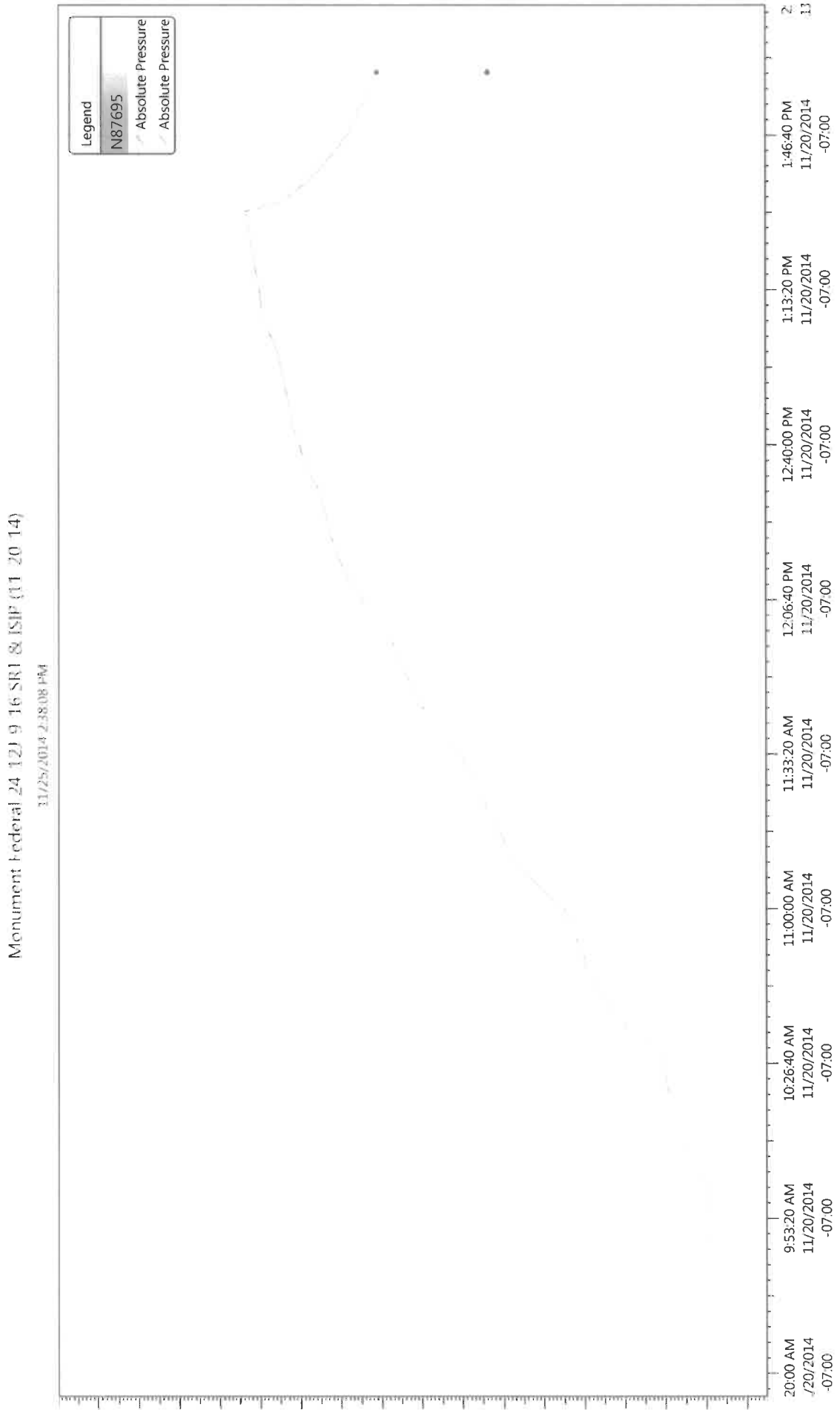
Monument Federal 24-12J-9-16 SR1 & ISIP (11-20-14)
11/25/2014 2:38:08 PM
Legend
N87695
Absolute Pressure
Absolute Pressure
20:00 AM
/20/2014
-07:00
9:53:20 AM
11/20/2014
-07:00
10:26:40 AM
11/20/2014
-07:00
11:00:00 AM
11/20/2014
-07:00
11:33:20 AM
11/20/2014
-07:00
12:06:40 PM
11/20/2014
-07:00
12:40:00 PM
11/20/2014
-07:00
1:13:20 PM
11/20/2014
-07:00
1:46:40 PM
11/20/2014
-07:00