UTAH OIL AND GAS CONSERVATION COMMISSION

REMARKS: WELL LOG _____ ELECTRIC LOGS ✓ X WATER SANDS _____ LOCATION INSPECTED _____ SUB. REPORT/abd. _____

950816 fr Homax to INLAND / merger Eff 6-29-95

960815 COMMENCED INJECTION Effective 6-21-96

DATE FILED 3-4-83

LAND: FEE & PATENTED STATE LEASE NO. PUBLIC LEASE NO. U-50376 INDIAN

DRILLING APPROVED: 3-11-83

SPUDDED IN: 9-10-83

COMPLETED: 10-21-83 POW PUT TO PRODUCING:

INITIAL PRODUCTION: 85 BOPD, 357 MCF

GRAVITY A.P.I. 35°

GOR: 4200:1

PRODUCING ZONES: (GRRV)

TOTAL DEPTH: 6000

WELL ELEVATION: 5240

DATE ABANDONED:

FIELD: ~~WILDCAT TREATY BOUNDARY~~ ~~Monument Butte~~ Treaty Boundary

UNIT:

COUNTY: DUCHESNE

WELL NO. BOUNDARY FEDERAL # 11-21 43-013-30752

LOCATION 1915 FT. FROM (N) (S) LINE, 2076 FT. FROM (E) (W) LINE NE SW 1/4 — 1/4 SEC. 21

TWP.	RGE.	SEC.	OPERATOR	TWP.	RGE.	SEC.	OPERATOR

QUATERNARY	Star Point	Chinle	Molas
Alluvium	Wahweap	Shinarump	Manning Canyon
Lake beds	Masuk	Moenkopi	Mississippian
Pleistocene	Colorado	Sinbad	Humbug
Lake beds	Sego	PERMIAN	Brazer
TERTIARY	Buck Tongue	Kaibab	Pilot Shale
Pliocene	Castlegate	Coconino	Madison
Salt Lake	Mancos	Cutler	Leadville
Oligocene	Upper	Hoskinnini	Redwall
Norwood	Middle	DeChelly	DEVONIAN
Eocene	Lower	White Rim	Upper
Duchesne River	Emery	Organ Rock	Middle
Uinta	Blue Gate	Cedar Mesa	Lower
Bridger	Ferron	Halgaite Tongue	Ouray
Green River 1904	Frontier	Phosphoria	Elbert
Douglas Creek 5223	Dakota	Park City	McCracken
Garden Gulch 4220	Burro Canyon	Rico (Goodridge)	Aneth
	Cedar Mountain	Supai	Simonson Dolomite
	Buckhorn	Wolfcamp	Sevy Dolomite
	JURASSIC	CARBON I FEROUS	North Point
Wasatch	Morrison	Pennsylvanian	SILURIAN
Stone Cabin	Salt Wash	Oquirrh	Laketown Dolomite
Colton	San Rafeal Gr.	Weber	ORDOVICIAN
Flagstaff	Summerville	Morgan	Eureka Quartzite
North Horn	Bluff Sandstone	Hermosa	Pogonip Limestone
Almy	Curtis		CAMBRIAN
Paleocene	Entrada	Pardox	Lynch
Current Creek	Moab Tongue	Ismay	Bowman
North Horn	Carmel	Desert Creek	Tapeats
CRETACEOUS	Glen Canyon Gr.	Akah	Ophir
Montana	Navajo	Barker Creek	Tintic
Mesaverde	Kayenta		PRE - CAMBRIAN
Price River	Wingate	Cane Creek	
Blackhawk	TRIASSIC		

ACME VISIBLE CROZET VIRGINIA 100730

Form 9-331 C
(May 1963)

SUBMIT IN TRIPLICATE*
(Other instructions on reverse side)

Form approved.
Budget Bureau No. 42-R1425.

UNITED STATES
DEPARTMENT OF THE INTERIOR
GEOLOGICAL SURVEY

APPLICATION FOR PERMIT TO DRILL, DEEPEN, OR PLUG BACK

5. LEASE DESIGNATION AND SERIAL NO.: U-50376

6. IF INDIAN, ALLOTTEE OR TRIBE NAME:

7. UNIT AGREEMENT NAME:

8. FARM OR LEASE NAME: Boundary Federal

9. WELL NO.: 11-21

10. FIELD AND POOL, OR WILDCAT: ~~Undesignated~~

11. SEC., T., R., M., OR BLK. AND SURVEY OR AREA: Section 21, T8S, R17E

1a. TYPE OF WORK: DRILL [X] DEEPEN [ ] PLUG BACK [ ]

b. TYPE OF WELL: OIL WELL [X] GAS WELL [ ] OTHER SINGLE ZONE [ ] MULTIPLE ZONE [ ]

2. NAME OF OPERATOR: Lomax Exploration Company

3. ADDRESS OF OPERATOR: P.O. Box 4503, Houston, TX 77210

4. LOCATION OF WELL (Report location clearly and in accordance with any State requirements.*)
At surface: 1915' FSL & 2076' FWL NE/SW
At proposed prod. zone:

14. DISTANCE IN MILES AND DIRECTION FROM NEAREST TOWN OR POST OFFICE*: 12 miles Southeast of Myton, Utah

12. COUNTY OR PARISH: Duchesne

13. STATE: Utah

15. DISTANCE FROM PROPOSED* LOCATION TO NEAREST PROPERTY OR LEASE LINE, FT. (Also to nearest drlg. unit line, if any): 918'

16. NO. OF ACRES IN LEASE: 1705.6

17. NO. OF ACRES ASSIGNED TO THIS WELL: 40

18. DISTANCE FROM PROPOSED LOCATION* TO NEAREST WELL, DRILLING, COMPLETED, OR APPLIED FOR, ON THIS LEASE, FT.: 2095

19. PROPOSED DEPTH: 7000 wasatch

20. ROTARY OR CABLE TOOLS: Rotary

21. ELEVATIONS (Show whether DF, RT, GR, etc.): 5240 GR

22. APPROX. DATE WORK WILL START*: May, 1983

23. PROPOSED CASING AND CEMENTING PROGRAM

SIZE OF HOLE	SIZE OF CASING	WEIGHT PER FOOT	SETTING DEPTH	QUANTITY OF CEMENT
12 1/4	8 5/8	24	300	To Surface
7 7/8	5 1/2	17	TD	As Required

APPROVED BY THE STATE OF UTAH DIVISION OF OIL, GAS, AND MINING
DATE: 3-11-83
BY: [signature]

RECEIVED
MAR 10 1983
DIVISION OF OIL, GAS & MINING

IN ABOVE SPACE DESCRIBE PROPOSED PROGRAM: If proposal is to deepen or plug back, give data on present productive zone and proposed new productive zone. If proposal is to drill or deepen directionally, give pertinent data on subsurface locations and measured and true vertical depths. Give blowout preventer program, if any.

24.

SIGNED [signature] G. L. Pruitt TITLE V.P. Drilling & Production DATE 3/04/83

(This space for Federal or State office use)

PERMIT NO. _____ APPROVAL DATE _____

APPROVED BY _____ TITLE _____ DATE _____

CONDITIONS OF APPROVAL, IF ANY:

Lomax Exploration Company
Well No. 11-21
Section 21, T. 8 S., R. 17 E.
Duchesne County, Utah
Lease U-50376

Supplemental Stipulations

1) The maximum width of access roads will be 30 feet total disturbed area. Turnouts will not be required and traveling off the right-of-way will not be allowed.

2) Topsoil will be stockpiled as addressed in the applicant's 13 Point Plan. It is recommended the top 6 - 10 inches of topsoil material will be stockpiled.

3) The BLM will be notified at least 24 hours prior to any rehabilitation.

4) A burn pit will not be constructed. There will be no burying of garbage or trash at the location. No trash will be thrown in the reserve pit. All trash must be contained and hauled to the nearest sanitary landfill.

5) All permanent (on site for six (6) months duration or longer) structures constructed or installed, including the pumpjack, shall be painted a flat, non-reflective, earthtone color to match Tnemec 23-08351 Mesa Brown Enduratone or an approved equal. All facilities shall be painted within six months of when the production facilities are put in place. Facilities that are required to comply with O.S.H.A. (Occupational Safety and Health Act) standards are excluded.

6) Reserve pits will be fenced with a wire mesh fence topped with at least one strand of barbed wire.

7) Adequate and sufficient electric/radioactive logs will be run to locate and identify the prime oil shale horizons and gilsonite in the Mahogany Zone of the Green River formation. Casing and cementing programs will be adjusted to eliminate any potential influence of the well bore or productive hydrocarbon zones on the oil shale and gilsonite resource. Surface casing program may require adjustment for protection of fresh water aquifers. (See attached tentative casing and cementing program for the Uinta Basin.)

8) A culvert will be placed in the irrigation ditch along the access road.

United States Department of the Interior

GEOLOGICAL SURVEY
Conservation Division
2000 Administration Building
1745 West 1700 South
Salt Lake City, Utah 84104

February 2, 1981

General Outline for the Protection and Isolation of Ground Water and Oil Shale in the Uinta Basin.

The oil shale occurs with varying thicknesses in most parts of the Uinta Basin and at varying depths. Ground water also occurs at varied depths above and below the Oil Shale. These ground waters have varying degrees of salinity. Nonetheless, drilling for hydrocarbon in the Uinta Basin should provide for the protection of the oil shale and the ground water if either is present.

The protection of the oil shale and the ground water can effectively be carried on through the design of an adequate casing and cementing program for each well drilled in the area.

In the Uinta Basin, water occurs mainly in the Uinta and the Green River formations. As drilling for hydrocarbon gets deeper into the crust of the earth, more ground water might be encountered and will be protected as it is encountered.

This notice's purpose is to attempt to lay the groundwork for a casing program and cementing program that will protect the oil shale and the ground water if present.

These programs are to be considered as guidelines. The specificity of casing depth, amount of cement and the depth of staging collars will be considered on an individual basis after a careful study of the logs of each individual well. Cementing from the bottom up is an economical solution if carefully conducted.

The casing and cementing program presented here as an example, will assume that fresh water was encountered in the upper parts of the Green River, that the oil shale occurs in the middle of the Green River (1000 foot section) and that some ground water is encountered in the lower parts of the Green River.

In this case, three areas will have to be cemented to assure the integrity of the ground water and oil shale. These areas are above the upper fresh water, across the oil shale and below the lower water aquifer. Deep aquifers that do not contain useful water are cemented to prevent water zone influence on production.

The following casing and cementing program will be appropriate for this example:

A. Surface casing is set at approximately 300 feet and cemented to the surface.

B. The next casing string will be set at approximately 300 feet below the lowest aquifer. Cementing will be done in three stages, using two stage collars and cement baskets or equivalent as described below and on attached sketches:

1. Cement first stage through the casing shoe to fill annulus back to base of lower aquifer.

2. Place 1st stage collar (with cement basket immediately below) at a selected point at the base of the oil shale. Cement will have to reach top of oil shale.

3. Place 2nd stage collar (with cement basket immediately below) 50 feet above the top of the Bird's Nest aquifer and cement to at least 300 feet above the stage collar.

C. The above is an example. Reasonable equivalents that accomplish these same protective measures, (such as cementing the water zones instead of isolating them), depending on the individual cases will be considered for approval.

D. When the above mentioned well is to be abandoned, inner-casing plugs will have to be placed at the same depth as the above mentioned annulus cement jobs.

The use of cement bond logs will verify the authenticity of the cement job performed.

E. The Operator of such well should notify U.S.G.S. 48 hours prior to commencement of casing and cementing activity, so a technician could be dispatched to witness the operations to verify compliance with casing and cementing program.

Attached Sketches:

1. Schematic of the required casing and cementing program.

2. Cross section of the Uinta Basin.

3. Schematic of the general ground water protection program.

E. W. Guynn
District Oil and Gas Supervisor

AMR/kr

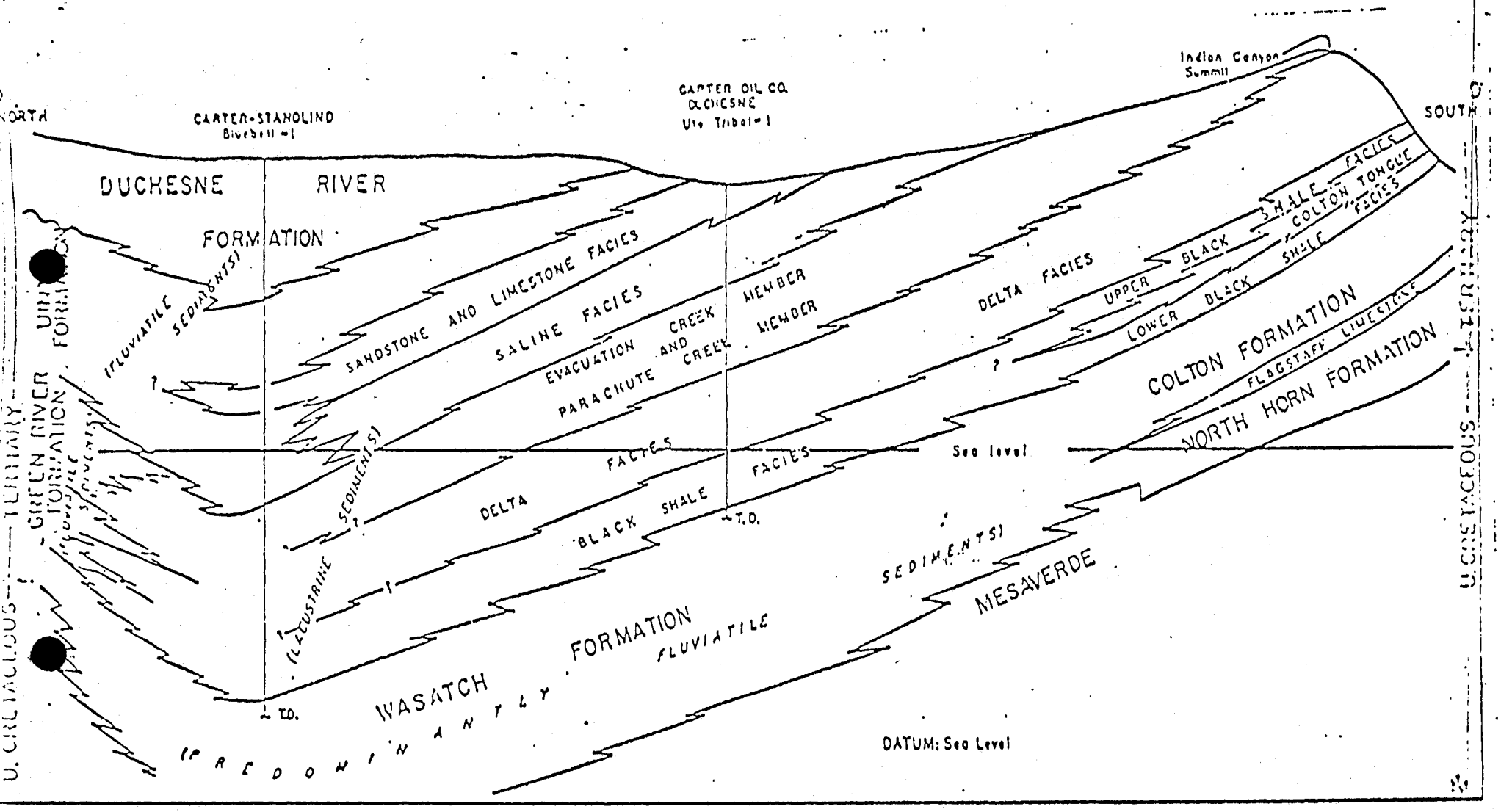

Figure 5.- View east of cross section of Uinta Basin showing stratigraphy and intertonguing of Tertiary rocks. Ute Tribal-1 (in section) is located about 8 miles southeast of the application area.

PARTIAL CASING & CEMENTING PROGRAM FOR WELLS IN NATURAL BUTTES FIELD. UINTAH COUNTY, UTAH

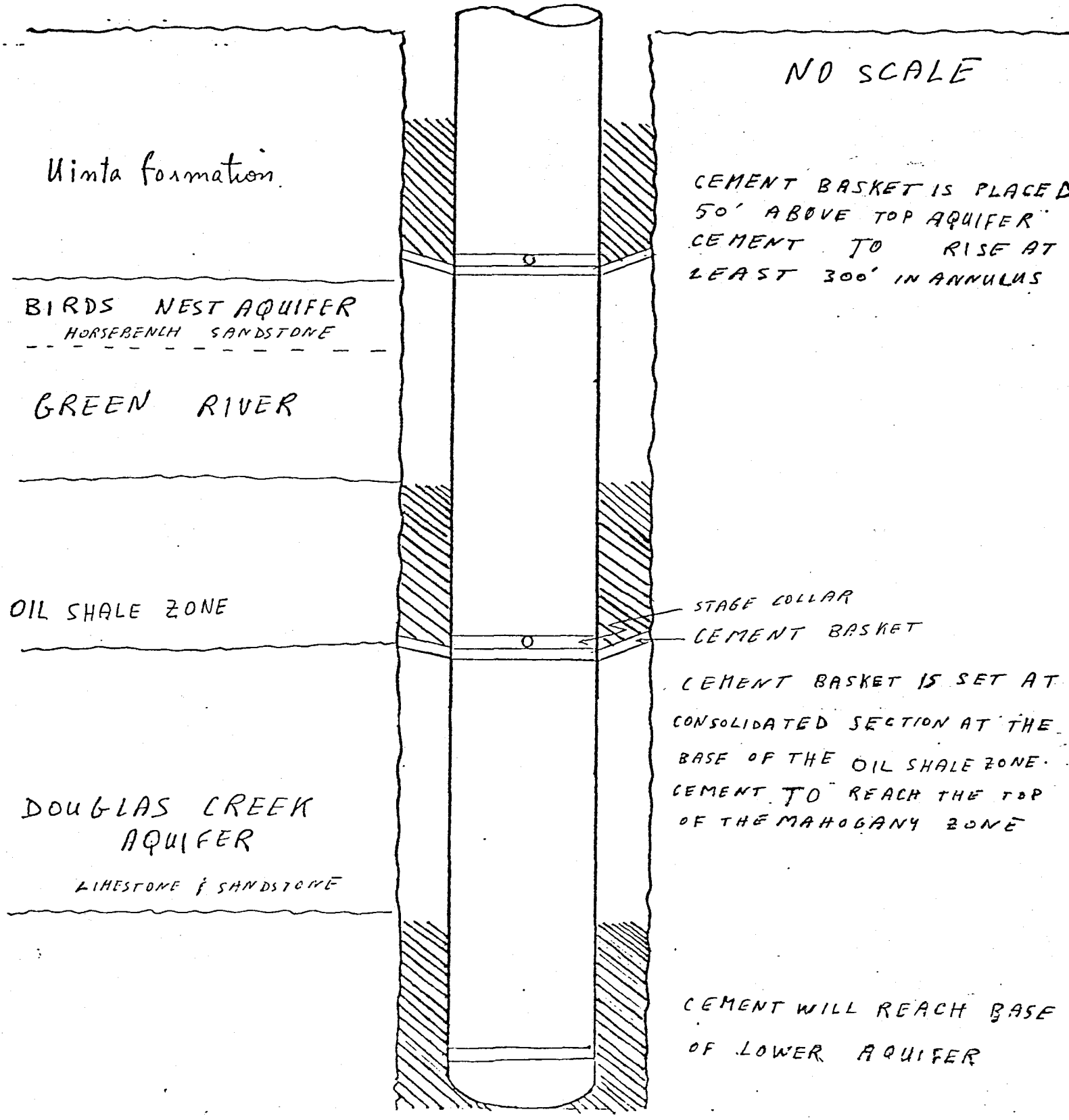

OPERATOR LOMAX EXPLORATION CO DATE 3-11-83

WELL NAME BOUNDARY FED #11-21

SEC NESW 21 T 8S R 17E COUNTY DUCHESNE

43-013-30752	FED
API NUMBER	TYPE OF LEASE

POSTING CHECK OFF:

[ ] INDEX	[ ] HL	[✓]
[ ] NID	[✓] PI	[ ]
[✓] MAP	[✓]	[ ]

PROCESSING COMMENTS:
No oil wells within 1000'

PJFV

APPROVAL LETTER:

SPACING: [ ] A-3 _____ UNIT [ ] c-3-a _____ CAUSE NO. & DATE

[X] c-3-b [ ] c-3-c

SPECIAL LANGUAGE:

- [x] RECONCILE WELL NAME AND LOCATION ON APD AGAINST SAME DATA ON PLAT MAP.
- [x] AUTHENTICATE LEASE AND OPERATOR INFORMATION
- [x] VERIFY ADEQUATE AND PROPER BONDING FED
- [x] AUTHENTICATE IF SITE IS IN A NAMED FIELD, ETC.
- [ ] APPLY SPACING CONSIDERATION
  - [ ] ORDER NO
  - [ ] UNIT NO
  - [x] c-3-b
  - [ ] c-3-c
- [x] CHECK DISTANCE TO NEAREST WELL.
- [x] CHECK OUTSTANDING OR OVERDUE REPORTS FOR OPERATOR'S OTHER WELLS.
- [x] IF POTASH DESIGNATED AREA, SPECIAL LANGUAGE ON APPROVAL LETTER
- [x] IF IN OIL SHALE DESIGNATED AREA, SPECIAL APPROVAL LANGUAGE.

March 11, 1983

Lomax Exploration Company
P. O. Box 4503
Houston, Texas 77210

RE: Well No. Boundary Fed. 11-21
NESW Sec. 21, T.8S, R.17E
1915' FSL, 2076' FWL
Duchesne County, Utah

Gentlemen:

Insofar as this office is concerned, approval to drill the above referred to oil well is hereby granted in accordance with Rule C-3(b), General Rules and Regulations and Rules of Practice and Procedure.

Should you determine that it will be necessary to plug and abandon this well, you are hereby requested to immediately notify the following:

RONALD J. FIRTH - Chief Petroleum Engineer
Office: 533-5771
Home: 571-6068

Enclosed please find Form OGC-8-X, which is to be completed whether or not water sands (acquifers) are encountered during drilling. Your cooperation in completing this form will be appreciated.

Further, it is requested that this Division be notified within 24 hours after drilling operations commence, and that the drilling contractor and rig number be identified.

The API number assigned to this well is 43-013-30752.

Sincerely,

Norman C. Stout
Administrative Assistant

NCS/as
cc: Oil & Gas Operations
Enclosure

Form 9-331 C
(May 1963)

SUBMIT IN TRIPLICATE*
(Other instructions on reverse side)

Form approved.
Budget Bureau No. 42-R1425.

UNITED STATES
DEPARTMENT OF THE INTERIOR
GEOLOGICAL SURVEY

APPLICATION FOR PERMIT TO DRILL, DEEPEN, OR PLUG BACK

5. LEASE DESIGNATION AND SERIAL NO.: U-50376

6. IF INDIAN, ALLOTTEE OR TRIBE NAME:

7. UNIT AGREEMENT NAME:

8. FARM OR LEASE NAME: Boundary Federal

9. WELL NO.: 11-21

10. FIELD AND POOL, OR WILDCAT: Undesignated

11. SEC., T., R., M., OR BLK. AND SURVEY OR AREA: Section 21, T8S, R17E

1a. TYPE OF WORK: DRILL [X] DEEPEN [ ] PLUG BACK [ ]

b. TYPE OF WELL: OIL WELL [X] GAS WELL [ ] OTHER SINGLE ZONE [ ] MULTIPLE ZONE [ ]

2. NAME OF OPERATOR: Lomax Exploration Company

3. ADDRESS OF OPERATOR: P.O. Box 4503, Houston, TX 77210

4. LOCATION OF WELL (Report location clearly and in accordance with any State requirements.*)
At surface: 1915' FSL & 2076' FWL NE/SW
At proposed prod. zone:

14. DISTANCE IN MILES AND DIRECTION FROM NEAREST TOWN OR POST OFFICE*: 12 miles Southeast of Myton, Utah

12. COUNTY OR PARISH: Duchesne

13. STATE: Utah

15. DISTANCE FROM PROPOSED* LOCATION TO NEAREST PROPERTY OR LEASE LINE, FT. (Also to nearest drlg. unit line, if any): 918'

16. NO. OF ACRES IN LEASE: 1705.6

17. NO. OF ACRES ASSIGNED TO THIS WELL: 40

18. DISTANCE FROM PROPOSED LOCATION* TO NEAREST WELL, DRILLING, COMPLETED, OR APPLIED FOR, ON THIS LEASE, FT.: 2095

19. PROPOSED DEPTH: 7000

20. ROTARY OR CABLE TOOLS: Rotary

21. ELEVATIONS (Show whether DF, RT, GR, etc.): 5240 GR

22. APPROX. DATE WORK WILL START*: May, 1983

23. PROPOSED CASING AND CEMENTING PROGRAM

SIZE OF HOLE	SIZE OF CASING	WEIGHT PER FOOT	SETTING DEPTH	QUANTITY OF CEMENT
12 1/4	8 5/8	24	300	To Surface
7 7/8	5 1/2	17	TD	As Required TO PROTECT OIL SHALE AND WATERS

RECEIVED
MAR 2 1983
DIV. OF OIL, GAS & MINING

MINERALS MANAGEMENT SERVICE
OIL & GAS OPERATIONS
RECEIVED
MAR 10 1983
SALT LAKE CITY, UTAH

IN ABOVE SPACE DESCRIBE PROPOSED PROGRAM: If proposal is to deepen or plug back, give data on present productive zone and proposed new productive zone. If proposal is to drill or deepen directionally, give pertinent data on subsurface locations and measured and true vertical depths. Give blowout preventer program, if any.

24.

SIGNED G. L. Pruitt TITLE V.P. Drilling & Production DATE 3/04/83

(This space for Federal or State office use)

PERMIT NO. APPROVAL DATE

APPROVED BY for E. W. Guynn TITLE District Oil & Gas Supervisor DATE MAY 31 1983

CONDITIONS OF APPROVAL, IF ANY:

NOTICE OF APPROVAL

CONDITIONS OF APPROVAL ATTACHED TO OPERATOR'S COPY

FLARING OR VENTING OF GAS IS SUBJECT TO NTL 4-A DATED 1/1/80

State O&G

PROJECT

LOMAX EXPLORATION

Well location, *BOUNDARY FED. #11-21*, located as shown in the NE1/4 SW 1/4 Section 21, T8S, R17E, S.L.B.&M. Duchesne County, Utah.

T 8 S, R 17 E, S.L.B. & M.

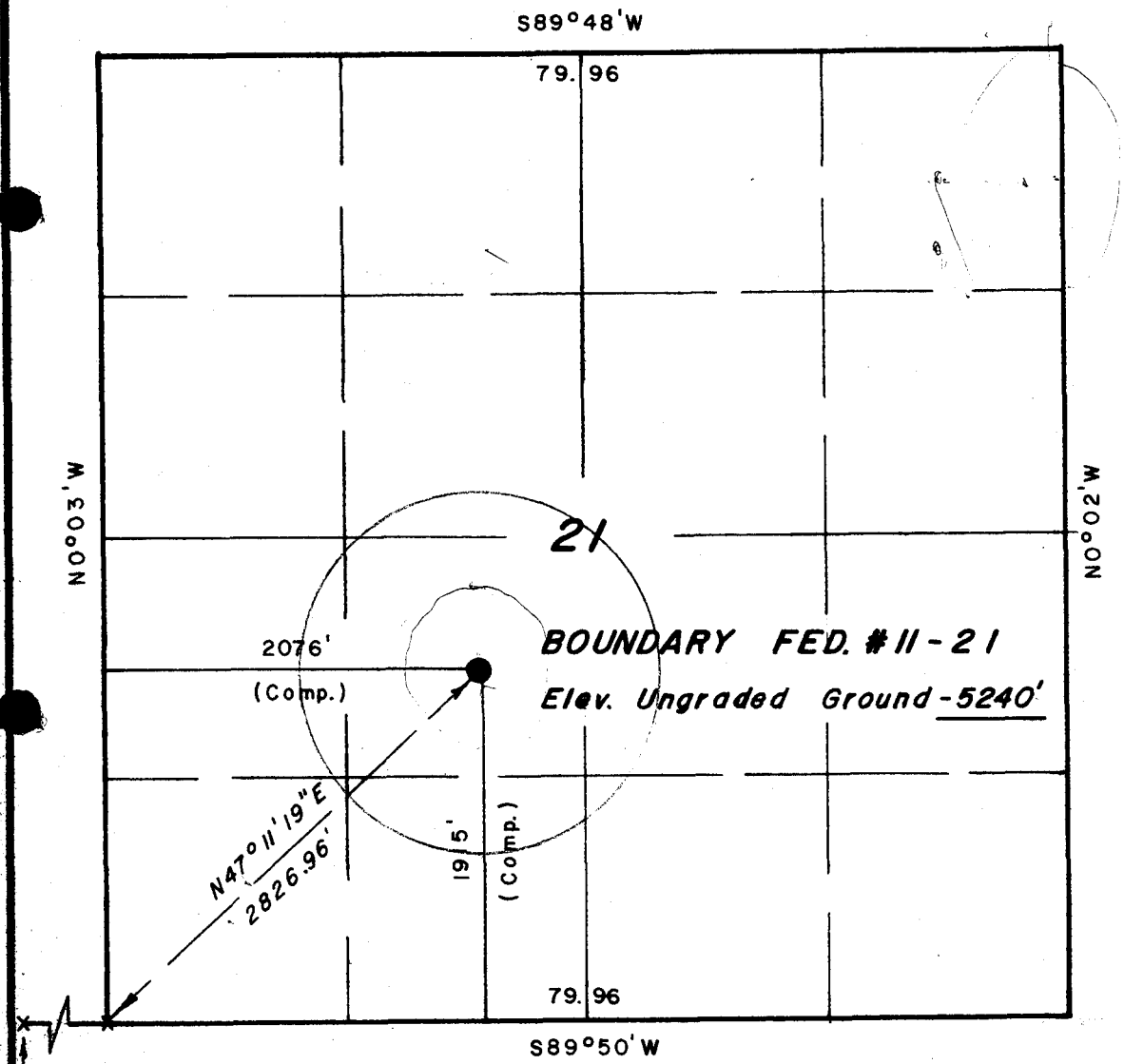

X = Section Corners Located

CERTIFICATE

THIS IS TO CERTIFY THAT THE ABOVE PLAT WAS PREPARED FROM FIELD NOTES OF ACTUAL SURVEYS MADE BY ME OR UNDER MY SUPERVISION AND THAT THE SAME ARE TRUE AND CORRECT TO THE BEST OF MY KNOWLEDGE AND BELIEF.

Laurence C. Kay

REGISTERED LAND SURVEYOR
REGISTRATION № 3137
STATE OF UTAH

UINTAH ENGINEERING & LAND SURVEYING
P.O. BOX Q – 85 SOUTH – 200 EAST
VERNAL, UTAH – 84078

SCALE 1" = 1000'	DATE 2/23/83
PARTY R.K. D.B. J.K. S.B.	REFERENCES GLO Plat
WEATHER Cold	FILE LOMAX

TEN POINT WELL PROGRAM

Lomax Exploration Company
Boundary Federal #11-21
NE/SW Section 21, T8S, R17E
Duchesne County, Utah

1. GEOLOGIC SURFACE FORMATION:

Uinta formation of Upper Eocene Age

2. ESTIMATED TOPS OF IMPORTANT GEOLOGIC MARKERS:

Uinta	0-2725
Green River	2725
Wasatch	5780

3. ESTIMATED DEPTHS OF ANTICIPATED WATER, OIL, GAS OR MINERALS:

Green River	2725	
H zone	3080	Sand and Shale - possible oil and gas shows
J zone	3980	Sand and Shale - oil ang gas shows anticipated
M zone	5180	Sand and Shale - primary objective - oil

4. PROPOSED CASING PROGRAM:

8 5/8", J-55, 24#; set at 300'
5 1/2", J-55, 17#, STC; set at TD
All casing will be new

5. MINIMUM SPECIFICATIONS FOR PRESSURE CONTROL:

The operators minimum specifications for pressure control equipment are as follows:

A 10" Series 900 Hydril Bag type BOP and a 10" Double Ram Hydraulic unit with a closing unit will be utilized. Pressure tests of BOP's to 1000# will be made prior to drilling surface plug and operation will be checked daily. (See exhibit A)

6. TYPE AND CHARACTERISTICS OF THE PROPOSED CIRCULATION MUDS:

It is proposed that the hole be drilled with fresh water to the "J" zone and with mud thereafter. The mud system will be a water based gel-chemical, weighted to 10.0 ppg as necessary for gas control.

Lomax Exploration Company
Boundary Federal #1-21
NE/SW Section 21, T8S, R17E
Duchesne County, Utah

7. AUXILIARY SAFETY EQUIPMENT TO BE USED:

Auxiliary safety equipment will be a Kelly Cock, bit float, and a TIW valve with drill pipe threads.

8. TESTING, LOGGING AND CORING PROGRAMS:

No coring or drill stem testing has been scheduled for this well. The logging will consist of a Dual Induction Laterolog and a Compensated Neutron-Formation Density.

9. ANTICIPATED ABNORMAL PRESSURE OR TEMPERATURE:

It is not anticipated that abnormal pressures or temperatures will be encountered; nor that any other abnormal hazards such as H_2S gas will be encountered in this area.

10. ANTICIPATED STARTING DATE AND DURATION OF THE OPERATIONS:

It is anticipated that operations will commence approximately May, 1983

LOMAX EXPLORATION

13 Point Surface Use Plan

For

Well Location

Boundary Fed. #11-21

Located In

Section 21, T8S, R17E, S.L.B.& M.

Duchesne County, Utah

1. EXISTING ROADS

See attached Topographic Map "A".

To reach LOMAX EXPLORATION well location site Boundary Fed. #11-21, located in the NE 1/4 SW 1/4 Section 21, T8S, R17E, S.L.B.& M., Duchesne County, Utah:

Proceed Westerly out of Myton, Utah along U.S. Highway 40 - 1.5 miles ± to the junction of this Highway and Utah State Highway 53; proceed Southerly along Utah State Highway 53 - 1.5 miles ± to its junction ;with Utah State Highway 216; proceed Southeasterly along Utah State Highway 216 - 6.0 miles to its junction with an existing improved dirt road to the east; proceed easterly along this dirt road 2.4 miles to its junction with the proposed access road (to be discussed in item #2).

The highways mentioned in the foregoing paragraph are bituminous surfaced roads to a point 3.4 miles south on Highway 216; thereafter the roads are constructed with existing materials and gravels. The highways are maintained by Utah State road crews. All other roads are maintained by County crews.

The aforementioned dirt oil field service roads and other roads in the vicinity are constructed out of existing native materials that are prevalent to the existing areas they are located in, and range from clays to a sandy-clay shale material.

The roads that are required for access during the drilling phase, completion phase, and production phase of this well will be maintained at the standards required by the B.L.M. or other controlling agencies. This maintenance will consist of some minor grader work for smoothing of road surfaces and for snow removal.

2. PLANNED ACCESS ROAD

See Topographic Map "B".

The planned road leaves the existing road described in Item #1 in the NE 1/4 SW 1/4 Section 21, T8S, R17E, S.L.B.& M., and proceeds in a Southwesterly direction approximately 650′ ± to the proposed location site.

The proposed access road will be an 18" crown road (9′ either side of the centerline) with drain ditches along either side of the proposed road where it is determined necessary in order to handle any run-off from normal meterological conditions that are prevalent to this area.

Back slopes along the cut areas of the road will be 1 1/2 to 1 slopes and terraced.

There will be one culvert required along this access road, it will be placed according to specifications for culvert placement found in the oil and gas surface operations manual. (see location layout sheet)

There will be no turnouts required along this road.

There are no fences encountered along this proposed road. There will be no new gates or cattlegaurds required.

The lands involved in this action are under B.L.M. jurisdiction.

The terrain that is traversed by this road is relatively flat. The grade of this road will not exceed 8%.

3. LOCATION OF EXISTING WELLS

There are two known existing wells within a one mile radius of this location site. (See Topographic Map "B").

There are no known water wells, injection wells, monitoring or observations wells for other resources within a one mile radius.

4. LOCATION OF EXISTING AND PROPOSED FACILITIES

There are two existing LOMAX EXPLORATION wells within a one mile radius of this location site. These locations have the following production facilities - two 300 barrel tanks, line heaters, pumping units and heater traces.

A tank battery site will be set up at the proposed location site. This battery will be used to contain production from this well. If in the event this battery can not be improvised, a flowline will be built which will extend to an existing battery in the area.

The area will be built if possible, with native materials and if these materials are not available then the necessary arrangements will be made to get them from private sources. These facilities will be constructed using bulldozers, graders and workman crews to construct and place the proposed facilities. If there is any deviation from the above, all appropriate agencies will be notified. Rehabilitation of disturbed areas no longer needed for operation after construction is completed will meet the requirements of Item #10.

5. LOCATION AND TYPE OF WATER SUPPLY

See Topographic Map "B".

At the present time, it is anticipated that the water for this well will be hauled by truck from a private water source that is indicated on topo. map "A".

In the event that this source is not used, an alternate source will be used and all necessary arrangements will be made with the proper authorities.

There will be no water well drilled at this location site.

6. SOURCE OF CONSTRUCTION MATERIALS

All construction material for this location site and access road shall be borrow material accumulated during construction of the location site and access road. No pit lining material from other sources are anticipated at this time, but if they are required, the appropriate actions will be taken to acquire them from private sources.

7. METHODS OF HANDLING WASTE DISPOSAL

See Location Layout Sheet.

A reserve pit will be constructed.

The reserve pit will vary in size and depth according to the water table at the time of drilling.

One half of the reserve pit will be used as a fresh water storage area during the drilling of this well and the other one half will be used to store non-flammable materials such as cuttings, salts, drilling fluids, chemicals and produced fluids, etc.

If deemed necessary by the agencies concerned to prevent contamination to surrounding areas, the reserve pits will be lined with a gel.

The pits will have wire and overhead flagging installed if deemed necessary to protect the water fowl, wildlife, and domestic animals.

At the onset of drilling, the reserve pit will be fenced on three sides and at the time drilling activities are completed, it will be fenced on the fourth side and allowed to dry completely prior to the time that backfilling and other reclamation activities are attempted.

When the reserve pit dries and reclamation activities commence, the pits will be covered with a minimum of four feet of soil and all requirements in Item #10 will be followed.

A portable chemical toilet will be provided for human waste.

8. ANCILLARY FACILITIES

There are no ancillary facilities planned for at the present time and none foreseen in the near future.

9. WELL SITE LAYOUT

See attached Location Layout Sheet.

The B.L.M. District Manager shall be notified before any construction begins on the proposed location site.

As mentioned in Item #7, the pits will be unlined unless it is determined by the representatives of the agencies involved that the materials are too porous and would cause contamination to the surrounding area; then the pits will be lined with a gel and any other type of material necessary to make it safe and tight.

When drilling activities commence, all work shall proceed in a neat and orderly sequence.

10. PLANS FOR RESTORATION OF SURFACE

As there is some topsoil on the location site, all topsoil shall be stripped and stockpiled. (See location layout sheet and Item #9). When all drilling and production activities have been completed, the location site and access road will be reshaped to the original contour and stockpiled topsoil spread over the disturbed area.

Any drainages re-routed during construction activities shall be restored to their original line of flow as near as possible. Fences around pits are to be removed upon completion of drilling activities and all waste being contained in the trash basket shall be hauled to the nearest Sanitary Landfill.

Restoration activities shall begin within 90 days after completion of the well. Once restoration activities have begun, they shall be completed within 30 days.

When restoration activities have been completed, the location site and access ramp shall be reseeded with a seed mixture recommended by the B.L.M. Representative when the moisture content of the soil is adequate for germination. The Lessee further covenants and agrees that all of said clean-up and restoration activities shall be done and performed in a diligent and most workmanlike manner and in strict conformity with the above mentioned Items #7 and #10.

11. OTHER INFORMATION

The Topography of the General Area - (See Topographic Map "A").

The area is a large basin formed by the Uinta Mountains to the North and the Book Cliff Mountains to the South. The Green River is located approximately 16 miles to the Southeast of the location site.

The basin floor is interlaced with numerous canyons and ridges formed by the non-perennial streams of the area. The sides of these canyons are steep and ledges formed in sandstone ledges, conglomerate deposits, and shale are common in this area.

The geologic structures of the area that are visible, are of the Uinta formation (Eocene Epoch) Tertiary Period in the upper elevations and the cobblestone and younger alluvial deposits from the Quaternary Period.

Outcrops of sandstone ledges, conglomerate deposits and shale are common in this area.

The topsoils in the area range from a light brownish-gray sandy clay (SM-ML) type soil with poorly graded gravels to a clayey (OL) soil.

The majority of the numerous washes and draws in the area are of non-perennial nature flowing during the early spring run-off and heavy rain storms of long duration which are rare as the normal annual rainfall in the area is only 8".

Due to the low precipitation average, climatic conditions and the marginal types of soils, the vegetation that is found in the area are common of the semi-arid regions and consists of areas of sagebrush, rabbitbrush some grasses and cacti as the primary flora. This is also true of the lower elevations.

The fauna of the area is sparse and consists predominantly of the mule deer, pronghorn antelope, coyotes, rabbits, and varieties of small ground squirrels and other types of rodents. The area is used by man for the primary purpose of grazing domestic sheep and cattle.

The birds of the area are raptors, finches, ground sparrows, magpies, crows, and jays.

The Topography of the Immediate Area - (See Topographic Map "B").

Boundary Fed. #11-21 is located approximately 3.5 miles Southeast of Wells Draw, a non-perennial drainage which runs to the North and East.

The terrain in the vicinity of the location slopes from the Southwest through the location site to the Northeast at approximately 1.0% grade.

The vegetation in the immediate area surrounding the location site consists of sage brush and grasses with large areas devoid of any vegetation.

There are no occupied dwellings or other facilities of this nature in the general area.

There are no visible archaeological, historical or cultural sites within any reasonable proximity of the proposed location site. (See Topographic Map "B").

12. LESSEE'S OR OPERATOR'S REPRESENTATIVE

Jack Pruitt
LOMAX EXPLORATION
333 North Belt East, Ste. 880
Houston, TX 77060

1-713-931-9276

13. CERTIFICATION

I hereby certify that I, or persons under my direct supervision have inspected the proposed drill site and access route; that I am familiar with the conditions which presently exist; that the statements made in this plan are to the best of my knowledge true and correct; and that the

work associated with the operation proposed herein will be performed by LOMAX EXPLORATION and its contractors and sub-contractors in conformity with this plan and the terms and conditions under which it is approved.

Date 3/4/83

Jack Fruitt

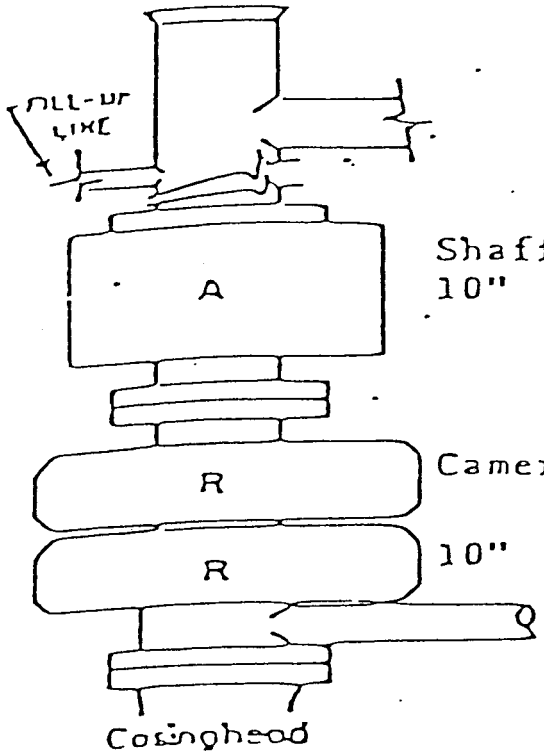
Shaffer Spherical
10" 900
A
Cameron Space Saver
R
R
10" 900
Casinghead

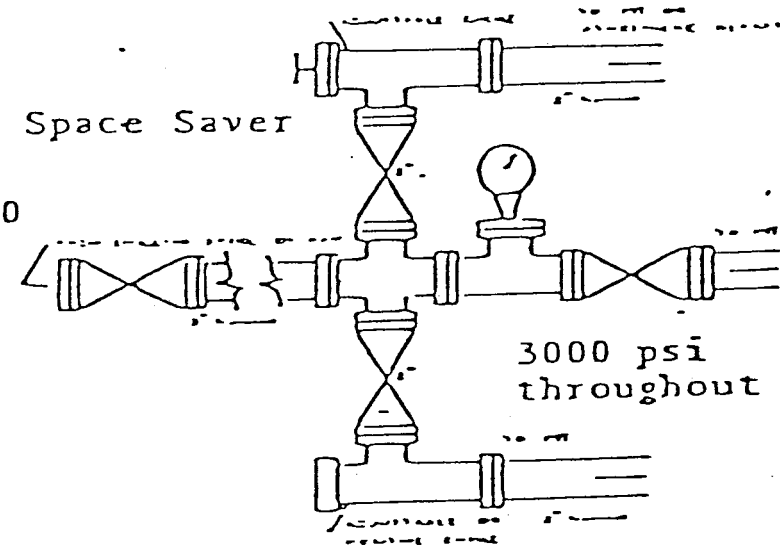
3000 psi
throughout

LOMAX EXPLORATION

BOUNDARY FED.# 11-21

LOCATION LAYOUT & CUT SHEET

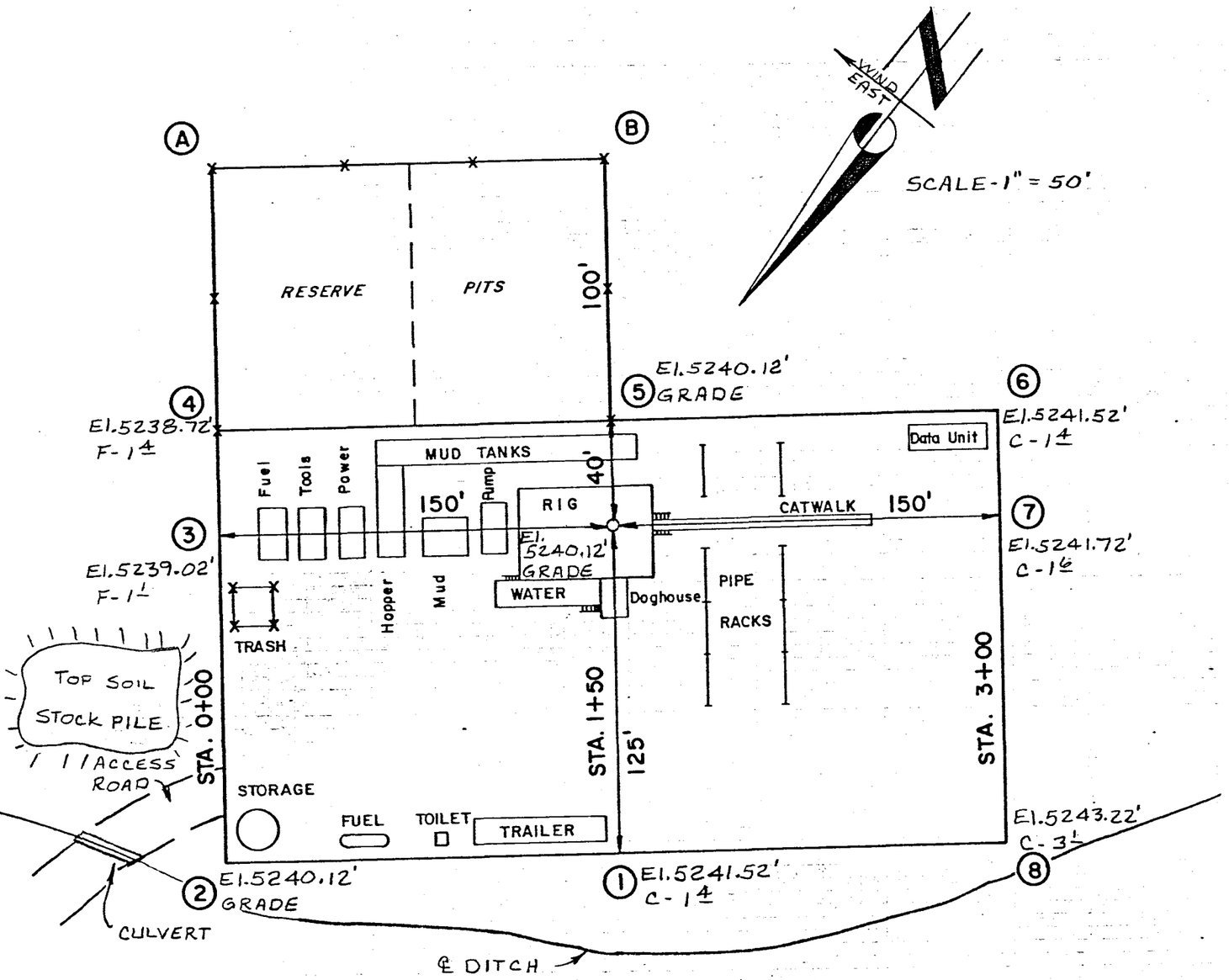

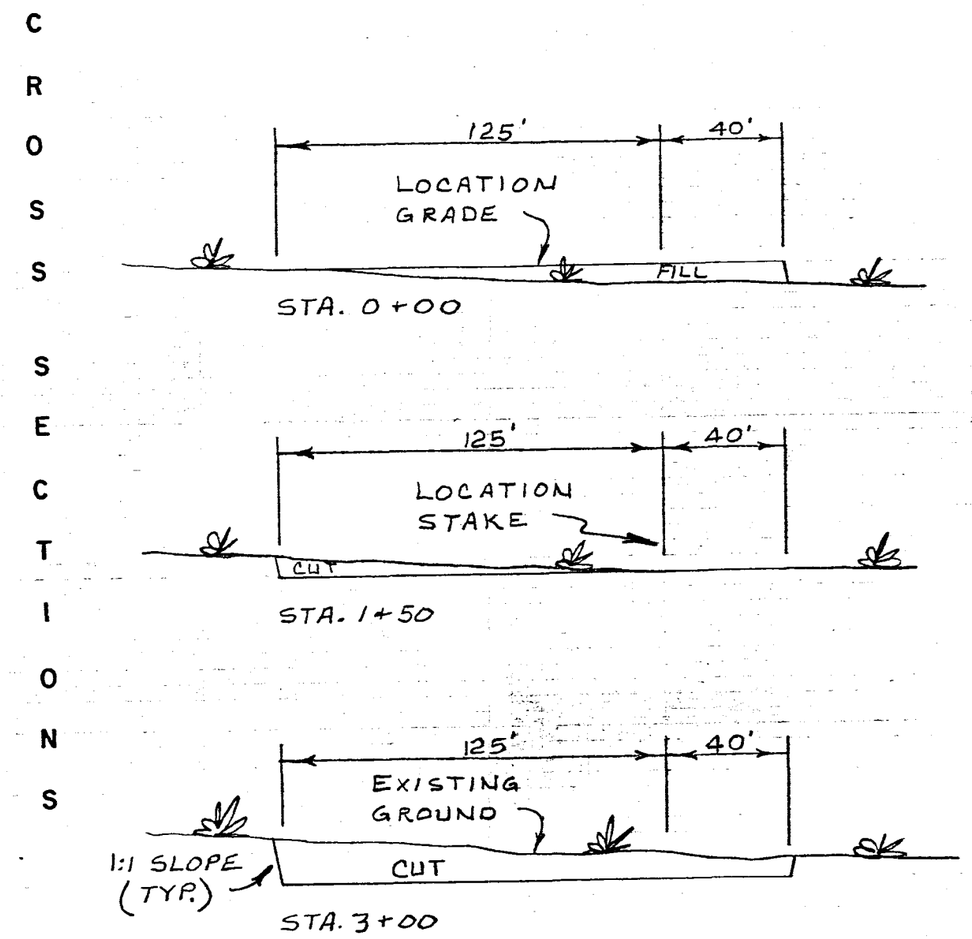

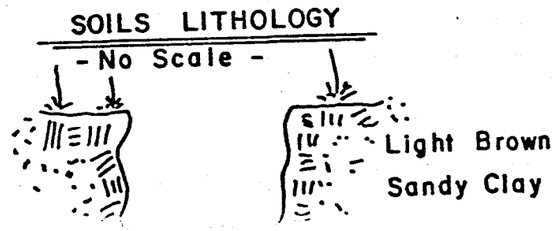

1" = 10'

Scales

1" = 50'

APPROXIMATE YARDAGES

Cubic Yards Cut - 1,490

Cubic Yards Fill - 333

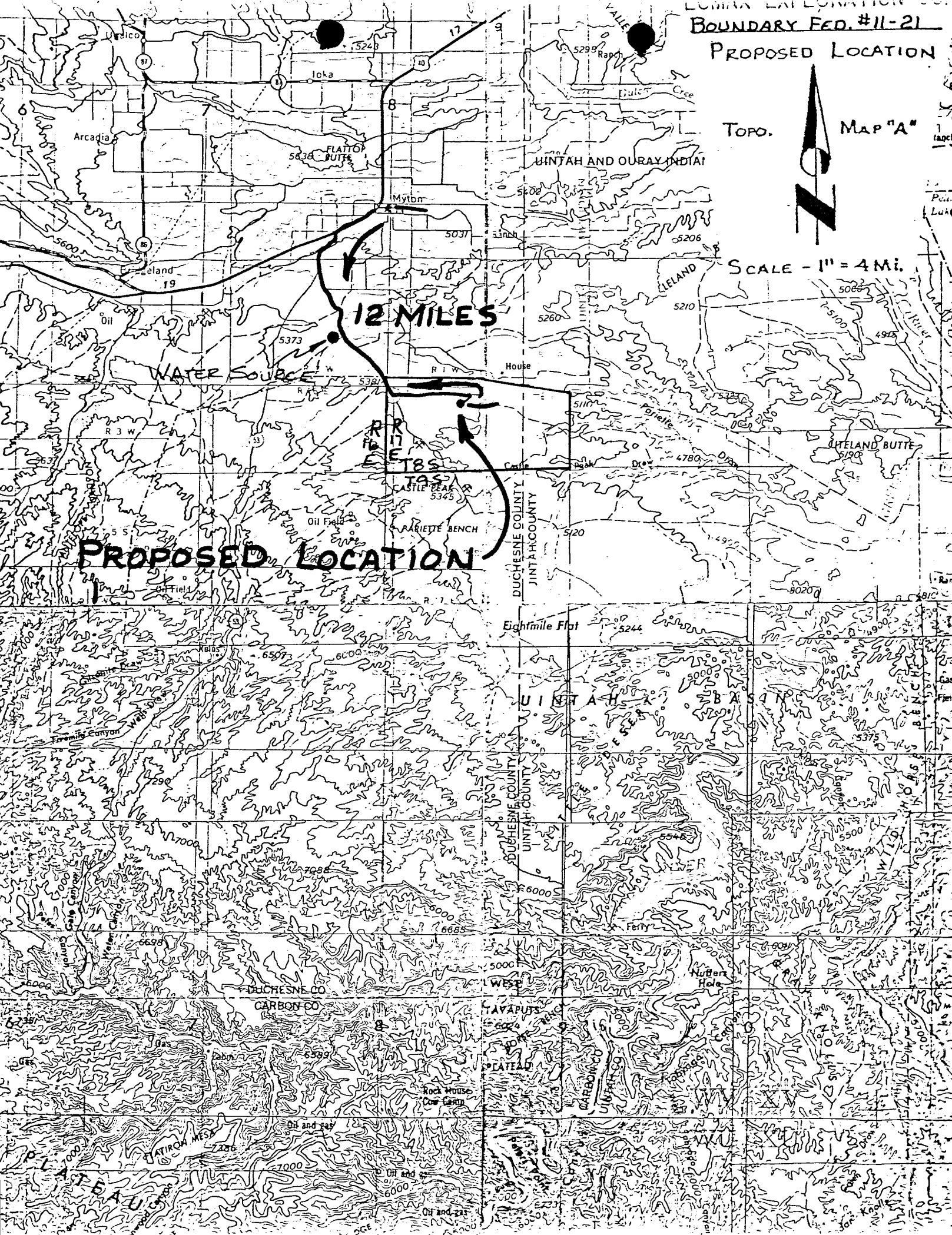

BOUNDARY FED. #11-21
PROPOSED LOCATION
TOPO. MAP "A"
SCALE - 1" = 4 Mi.
12 MILES
WATER SOURCE
PROPOSED LOCATION
R 17 E
T8S
T9S
Myton
Arcadia
Ioka
Oil
House
Castle Peak
Oil Field
PARIETTE BENCH
UINTAH AND OURAY INDIAN
DUCHESNE COUNTY
JINTAH COUNTY
Eightmile Flat
UINTAH BASIN
Ferry
Nutters Hole
DUCHESNE CO
CARBON CO
TAVAPUTS
PLATEAU
Rock House Cow Camp
Oil and gas
FLATIRON MESA

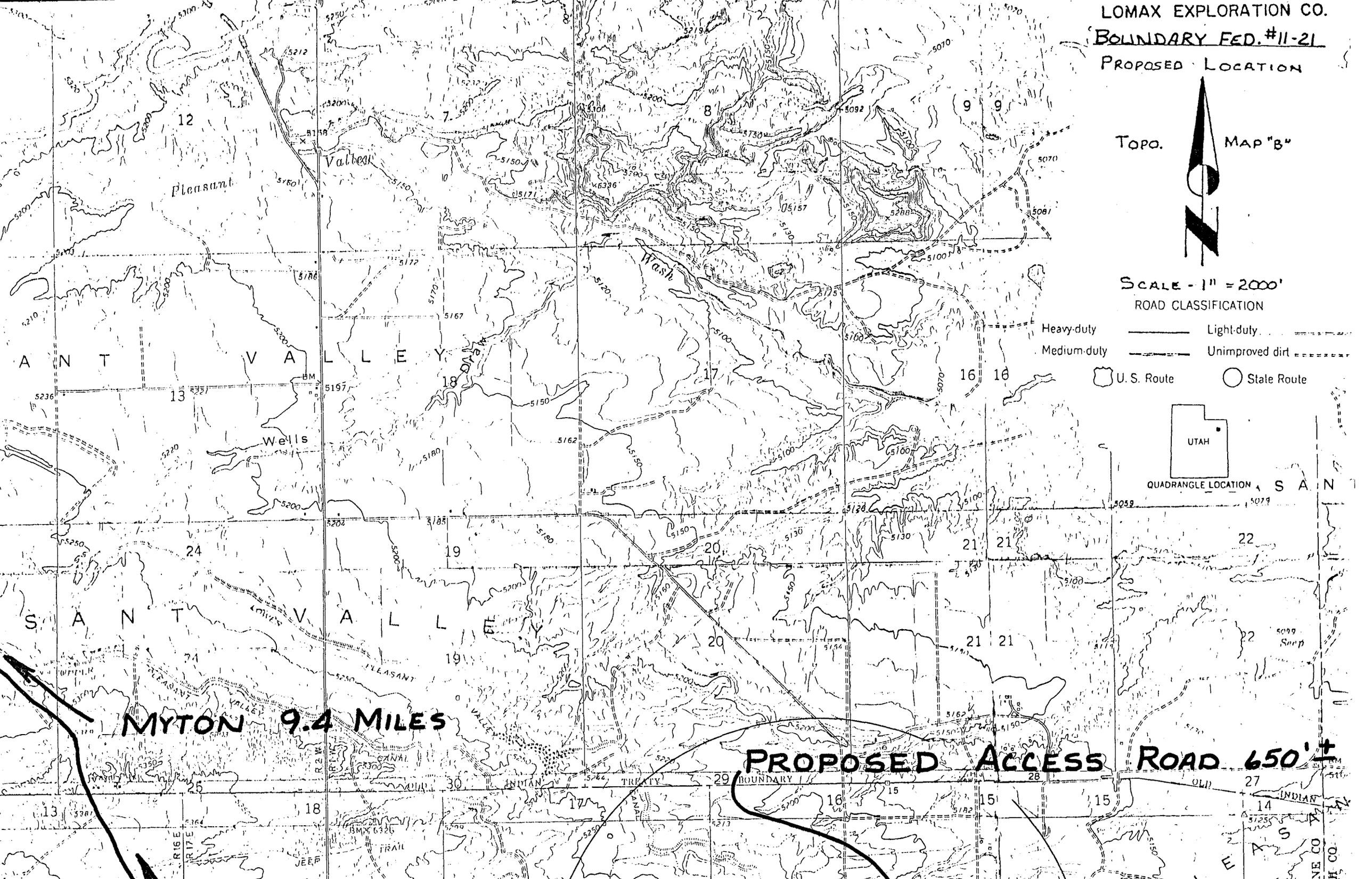
LOMAX EXPLORATION CO.
BOUNDARY FED. #11-21
PROPOSED LOCATION
TOPO. MAP "B"
SCALE - 1" = 2000'
ROAD CLASSIFICATION
Heavy-duty
Light-duty
Medium-duty
Unimproved dirt
U. S. Route
State Route
UTAH
QUADRANGLE LOCATION
MYTON 9.4 MILES
PROPOSED ACCESS ROAD 650'±
Pleasant Valley
Wash
Draw
Wells
SANT VALLEY
SANT VALLEY
INDIAN TREATY BOUNDARY
OLD INDIAN
JEEP TRAIL
CANAL
Seep

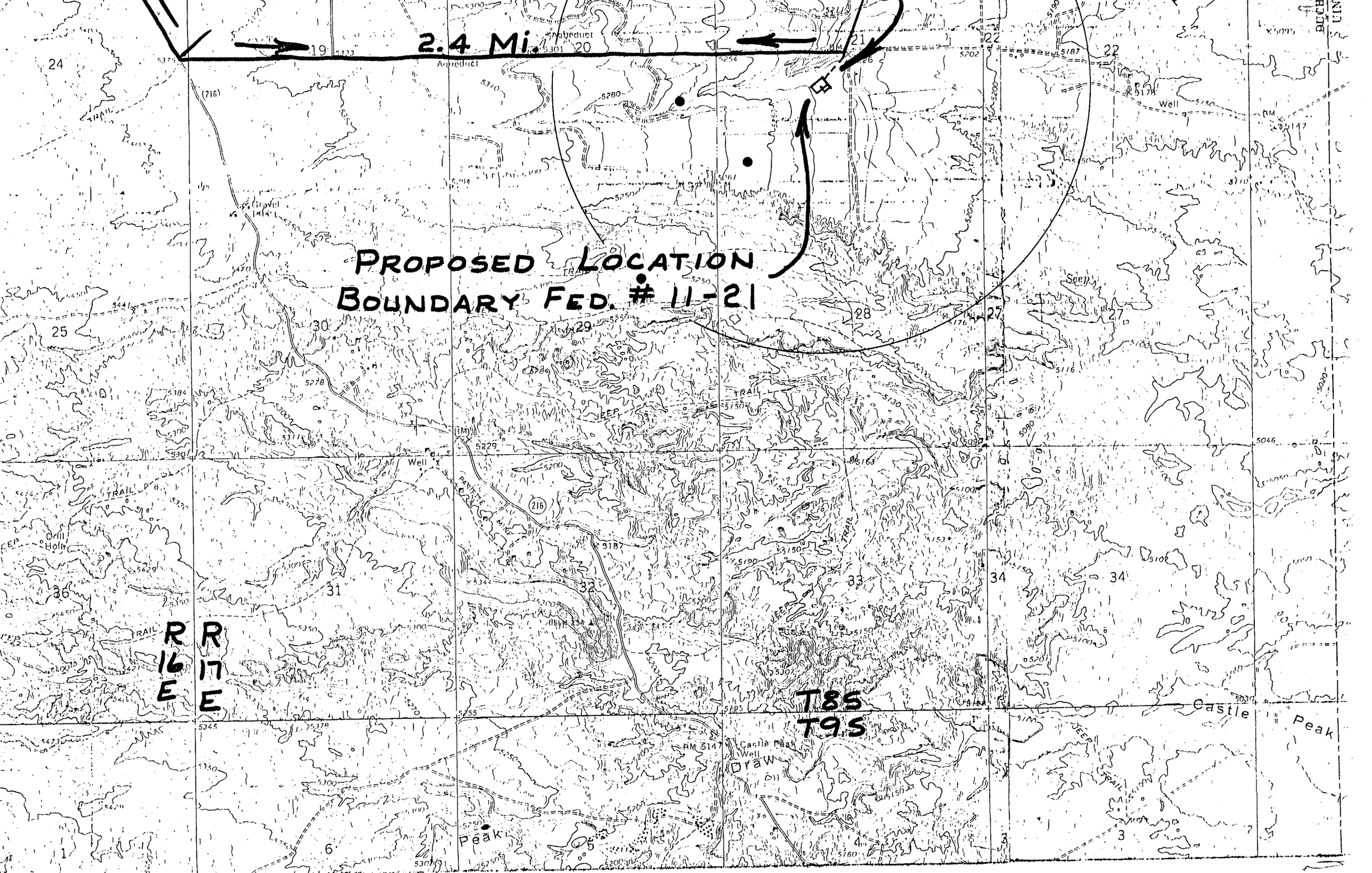
2.4 Mi.
PROPOSED LOCATION
BOUNDARY FED. # 11-21
R 16 E
R 17 E
T8S
T9S
Castle Peak
Draw
Peak
Well
Aqueduct
Gravel Pit
Drill Hole
Seep
JEEP TRAIL
TRAIL
216

before well ef

DIVISION OF OIL, GAS AND MINING

SPUDDING INFORMATION

NAME OF COMPANY: LOMAX EXPLORATION COMPANY

WELL NAME: BOUNDARY FEDERAL 11-21

SECTION NESW 21 TOWNSHIP 8S RANGE 17E COUNTY Duchesne

DRILLING CONTRACTOR TWT

RIG # 55

SPUDDED: DATE 9-10-83

TIME 3:00 PM

HOW Rotary

DRILLING WILL COMMENCE _____

REPORTED BY Michelle

TELEPHONE # 713-931-9276

DATE 9-12-83 SIGNED AS

NOTICE OF SPUD

Company: Lomax Exploration

Caller: Michelle

Phone:

Well Number: 11-21

Location: NE SW 21-8S-17E

County: Duchesne State: Utah

Lease Number: U-50376

Lease Expiration Date:

Unit Name (If Applicable):

Date & Time Spudded: 3:00 PM 9-10-83

Dry Hole Spudder/Rotary:

Details of Spud (Hole, Casing, Cement, etc.)

Rotary Rig Name & Number: TWT #55

Approximate Date Rotary Moves In:

FOLLOW WITH SUNDRY NOTICE

Call Received By: DeLoris

Date: 9-12-83

RECEIVED
SEP 14 1983
DIVISION OF
OIL, GAS & MINING

Well File
District/Vernal
State Oil & Gas

Form 9-331
Dec. 1973

Budget Bureau No. 42-R1424

UNITED STATES
DEPARTMENT OF THE INTERIOR
GEOLOGICAL SURVEY

SUNDRY NOTICES AND REPORTS ON WELLS

(Do not use this form for proposals to drill or to deepen or plug back to a different reservoir. Use Form 9-331-C for such proposals.)

1. oil well [X] gas well [ ] other

2. NAME OF OPERATOR
Lomax Exploration Company

3. ADDRESS OF OPERATOR
P.O. Box 4503, Houston, TX 77210

4. LOCATION OF WELL (REPORT LOCATION CLEARLY. See space 17 below.)
AT SURFACE: 1915' FSL & 2076' FWL NE/SW
AT TOP PROD. INTERVAL:
AT TOTAL DEPTH:

5. LEASE
U-50376

6. IF INDIAN, ALLOTTEE OR TRIBE NAME

7. UNIT AGREEMENT NAME

8. FARM OR LEASE NAME
Boundary Federal

9. WELL NO.
11-21

10. FIELD OR WILDCAT NAME
Undesignated

11. SEC., T., R., M., OR BLK. AND SURVEY OR AREA
Section 21, T8S, R17E

12. COUNTY OR PARISH: Duchesne
13. STATE: Utah

14. API NO.
43-013-30752

15. ELEVATIONS (SHOW DF, KDB, AND WD)
5240 GR

16. CHECK APPROPRIATE BOX TO INDICATE NATURE OF NOTICE, REPORT, OR OTHER DATA

REQUEST FOR APPROVAL TO:		SUBSEQUENT REPORT OF:
TEST WATER SHUT-OFF	[ ]	[ ]
FRACTURE TREAT	[ ]	[ ]
SHOOT OR ACIDIZE	[ ]	[ ]
REPAIR WELL	[ ]	[ ]
PULL OR ALTER CASING	[ ]	[ ]
MULTIPLE COMPLETE	[ ]	[ ]
CHANGE ZONES	[ ]	[ ]
ABANDON*	[ ]	[ ]
(other) SPUD NOTIFICATION		

(NOTE: Report results of multiple completion or zone change on Form 9-330.)

17. DESCRIBE PROPOSED OR COMPLETED OPERATIONS (Clearly state all pertinent details, and give pertinent dates, including estimated date of starting any proposed work. If well is directionally drilled, give subsurface locations and measured and true vertical depths for all markers and zones pertinent to this work.)*

9/7/83 Drilled 13" surface hole to 300'. Set 8 5/8" 24# J-55 casing at 278' GL. Cemented with 210 sx class "G" + 2% CaCl + 1/4#/sx flocele. Bumped plug - float held.

Spud with TWT Rig #55 at 3:00 P.M. 9/10/83.

Subsurface Safety Valve: Manu. and Type _____ Set @ _____ Ft.

18. I hereby certify that the foregoing is true and correct

SIGNED G. L. Pruitt TITLE V.P. Drlg. & Prod. DATE 9/13/83

(This space for Federal or State office use)

APPROVED BY _____ TITLE _____ DATE _____
CONDITIONS OF APPROVAL, IF ANY:

RECEIVED
SEP 19 1983
DIV. OF OIL, GAS & MINING

*See Instructions on Reverse Side

FILE IN TRIPLICATE
FORM OGC-8-X

56 64 03

STATE OF UTAH
DEPARTMENT OF NATURAL RESOURCES
DIVISION OF OIL, GAS AND MINING
1588 West North Temple
Salt Lake City, Utah 84116

RECEIVED
OCT 11 1983
DIVISION OF
OIL, GAS & MINING

REPORT OF WATER ENCOUNTERED DURING DRILLING

Well Name & Number Boundary Federal 11-21

Operator Lomax Exploration Address Roosevelt, Utah

Contractor T.W.T. Address Park City, Utah.

Location ___ ¼ ___ ¼ Sec. 21 T. 8S R. 17E County Duchesne

Water Sands

	Depth		Volume	Quality
	From	To	Flow Rate or Head	Fresh or Salty
1.	no water encountered.			
2.				
3.				
4.				
5.				

(Continue of reverse side if necessary)

Formation Tops
Surface - Uinta
Green River - 1908 -(+3344)
Garden Gulch 4220 -(+1032)
Douglas Creek 5222 (+30)
T.D @ 6000 - Basal Green River

Remarks

NOTE: (a) Report on this form as provided for in Rule C-20, General Rules and Regulations and Rules of Practice and Procedure.

(b) If a water analysis has been made of the above reported zone, please forward a copy along with this form.

LOMAX
EXPLORATION
COMPANY

November 28, 1983

DIVISION OF
OIL, GAS & MINING

Chief, Branch of Fluid Minerals,
Utah State Office, B.L.M.
136 East South Temple
Salt Lake City, Utah 84111

Boundary Federal #11-21
NE/SW Section 21, T8S, R17E
Duchesne County, Utah

Gentlemen:

Enclosed is the Well Completion Report and logs for the subject well. It is requested that the logs remain confidential for at least six months.

Please advise if you need additional information.

Very truly yours,

Michele Tisdel

Michele Tisdel
Sec., V.P. Drilling & Production

MT
Enclosures (5)

cc: State of Utah
Division of Oil and Gas
4241 State Office Building
Salt Lake City, Utah 84114

Bureau of Land Management
170 South 500 East
Vernal, Utah 84078

333 North Belt East • Suite 880 • Houston, Texas 77060 • 713/931-9276
Mailing Address: P.O. Box 4503 • Houston, Texas 77210-4503

District Office: 248 North Union • Roosevelt, Utah 84066
Mailing Address: P.O. Box 1446 •Roosevelt, Utah 84066

Form 9-330
(Rev. 5-63)

UNITED STATES
DEPARTMENT OF THE INTERIOR
GEOLOGICAL SURVEY

SUBMIT IN DUPLICATE (See instructions on reverse side)

Confidential
Form approved. Budget Bureau No. 42-R355.5.

WELL COMPLETION OR RECOMPLETION REPORT AND LOG*

RECEIVED NOV 5 1983 DIV. OF OIL, GAS & MINING

1a. TYPE OF WELL: OIL WELL [X] GAS WELL [ ] DRY [ ] Other

b. TYPE OF COMPLETION: NEW WELL [X] WORK OVER [ ] DEEP-EN [ ] PLUG BACK [ ] DIFF. RESVR. [ ] Other

2. NAME OF OPERATOR: Lomax Exploration Company

3. ADDRESS OF OPERATOR: P.O. Box 4503, Houston, TX 77210

4. LOCATION OF WELL (*Report location clearly and in accordance with any State requirements*)*
At surface: 1915' FSL & 2076' FWL NE/SW
At top prod. interval reported below
At total depth

5. LEASE DESIGNATION AND SERIAL NO.: U-50376
6. IF INDIAN, ALLOTTEE OR TRIBE NAME:
7. UNIT AGREEMENT NAME:
8. FARM OR LEASE NAME: Boundary Federal
9. WELL NO.: 11-21
10. FIELD AND POOL, OR WILDCAT: Undesignated
11. SEC., T., R., M., OR BLOCK AND SURVEY OR AREA: Section 21, T8S, R17E

14. PERMIT NO.	DATE ISSUED	12. COUNTY OR PARISH	13. STATE
43-013-30752	3/11/83	Duchesne	Utah

15. DATE SPUDDED	16. DATE T.D. REACHED	17. DATE COMPL. (*Ready to prod.*)	18. ELEVATIONS (DF, RKB, RT, GR, ETC.)*	19. ELEV. CASINGHEAD
9/10/83	9/17/83	10/21/83	5240' GR	5240

20. TOTAL DEPTH, MD & TVD	21. PLUG, BACK T.D., MD & TVD	22. IF MULTIPLE COMPL., HOW MANY*	23. INTERVALS DRILLED BY	ROTARY TOOLS	CABLE TOOLS
6000	5919		→	X	

24. PRODUCING INTERVAL(S), OF THIS COMPLETION—TOP, BOTTOM, NAME (MD AND TVD)*: Green River 5417-35

25. WAS DIRECTIONAL SURVEY MADE: NO

26. TYPE ELECTRIC AND OTHER LOGS RUN: DLL, CDL-CNL, ~~CBL-GR~~

27. WAS WELL CORED: NO

28. CASING RECORD (*Report all strings set in well*)

CASING SIZE	WEIGHT, LB./FT.	DEPTH SET (MD)	HOLE SIZE	CEMENTING RECORD	AMOUNT PULLED
8 5/8	24	278	13	210 sx cl "G" + 2% CaCl + 1/4#/sx flocele	
5 1/2	17	5969	7 7/8	250 sx Lodense & 300 sx Thixotropic	

29. LINER RECORD

SIZE	TOP (MD)	BOTTOM (MD)	SACKS CEMENT*	SCREEN (MD)

30. TUBING RECORD

SIZE	DEPTH SET (MD)	PACKER SET (MD)
2 7/8	5576'	

31. PERFORATION RECORD (*Interval, size and number*)
5417-24
5427-35

32. ACID, SHOT, FRACTURE, CEMENT SQUEEZE, ETC.

DEPTH INTERVAL (MD)	AMOUNT AND KIND OF MATERIAL USED
5417-35	Frac w/33 bbls 5% KCl water & Clay Stabilizer

CONFIDENTIAL

33.* PRODUCTION

DATE FIRST PRODUCTION	PRODUCTION METHOD (*Flowing, gas lift, pumping—size and type of pump*)	WELL STATUS (*Producing or shut-in*)
10/21/83	Pumping	Producing

DATE OF TEST	HOURS TESTED	CHOKE SIZE	PROD'N. FOR TEST PERIOD	OIL—BBL.	GAS—MCF.	WATER—BBL.	GAS-OIL RATIO
11/15/83	24	Open	→	85	357	0	4200e

FLOW. TUBING PRESS.	CASING PRESSURE	CALCULATED 24-HOUR RATE	OIL—BBL.	GAS—MCF.	WATER—BBL.	OIL GRAVITY-API (CORR.)
0	0	→	85	357	0	35

34. DISPOSITION OF GAS (*Sold, used for fuel, vented, etc.*): Used for fuel & vented

TEST WITNESSED BY:

35. LIST OF ATTACHMENTS

36. I hereby certify that the foregoing and attached information is complete and correct as determined from all available records

SIGNED G. L. Pruitt TITLE V.P. Drilling & Production DATE 11/18/83

*(See Instructions and Spaces for Additional Data on Reverse Side)

INSTRUCTIONS

General: This form is designed for submitting a complete and correct well completion report and log on all types of lands and leases to either a Federal agency or a State agency, or both, pursuant to applicable Federal and/or State laws and regulations. Any necessary special instructions concerning the use of this form and the number of copies to be submitted, particularly with regard to local, area, or regional procedures and practices, either are shown below or will be issued by, or may be obtained from, the local Federal and/or State office. See instructions on items 22 and 24, and 33, below regarding separate reports for separate completions.
If not filed prior to the time this summary record is submitted, copies of all currently available logs (drillers, geologists, sample and core analysis, all types electric, etc.), formation and pressure tests, and directional surveys, should be attached hereto, to the extent required by applicable Federal and/or State laws and regulations. All attachments should be listed on this form, see item 35.
Item 4: If there are no applicable State requirements, locations on Federal or Indian land should be described in accordance with Federal requirements. Consult local State or Federal office for specific instructions.
Item 18: Indicate which elevation is used as reference (where not otherwise shown) for depth measurements given in other spaces on this form and in any attachments.
Items 22 and 24: If this well is completed for separate production from more than one interval zone (multiple completion), so state in item 22, and in item 24 show the producing interval, or intervals, top(s), bottom(s) and name(s) (if any) for only the interval reported in item 33. Submit a separate report (page) on this form, adequately identified, for each additional interval to be separately produced, showing the additional data pertinent to such interval.
Item 29: *"Sacks Cement":* Attached supplemental records for this well should show the details of any multiple stage cementing and the location of the cementing tool.
Item 33: Submit a separate completion report on this form for each interval to be separately produced. (See instruction for items 22 and 24 above.)

37. SUMMARY OF POROUS ZONES:
SHOW ALL IMPORTANT ZONES OF POROSITY AND CONTENTS THEREOF; CORED INTERVALS; AND ALL DRILL-STEM TESTS, INCLUDING DEPTH INTERVAL TESTED, CUSHION USED, TIME TOOL OPEN, FLOWING AND SHUT-IN PRESSURES, AND RECOVERIES

FORMATION	TOP	BOTTOM	DESCRIPTION, CONTENTS, ETC.
Green River	1904		
X	-5050		
Y	-5087		
DC	-5223		
D_1	-5272		
D_2	-5320		
C	-5416		
A	-5770		
Douglas Creek	5223		
Garden Gulch	4220		

38. GEOLOGIC MARKERS

NAME	TOP MEAS. DEPTH	TOP TRUE VERT. DEPTH

LOMAX
EXPLORATION
COMPANY

December 13, 1983

Chief, Branch of Fluid Minerals,
Utah State Office, B.L.M.
136 East South Temple
Salt Lake City, Utah 84111

Boundary Federal #11-21
NE/SW Section 21, T8S, R17E
Duchesne County, Utah

Gentlemen:

It is requested that the subject well file remain confidential for at least six months or until further notified.

Very truly yours,

Michele Tisdel

Michele Tisdel
Sec., V.P. Drilling & Production

MT

cc: State of Utah
Division of Oil and Gas
4241 State Office Building
Salt Lake City, Utah 84114

Bureau of Land Management
170 South 500 East
Vernal, Utah 84078

RECEIVED

DIVISION OF
OIL, GAS & MINING

333 North Belt East • Suite 880 • Houston, Texas 77060 • 713/931-9276
Mailing Address: P.O. Box 4503 • Houston, Texas 77210-4503

District Office: 248 North Union • Roosevelt, Utah 84066
Mailing Address: P.O. Box 1146 •Roosevelt, Utah 84066

Form 3160-5
(November 1983)
(Formerly 9-331)

UNITED STATES
DEPARTMENT OF THE INTERIOR
BUREAU OF LAND MANAGEMENT

SUBMIT IN TRIPLICATE* (Other instructions on reverse side)

Form approved.
Budget Bureau No. 1004-0135
Expires August 31, 1985

SUNDRY NOTICES AND REPORTS ON WELLS

(Do not use this form for proposals to drill or to deepen or plug back to a different reservoir. Use "APPLICATION FOR PERMIT—" for such proposals.)

1. OIL WELL [X] GAS WELL [ ] OTHER

2. NAME OF OPERATOR: Lomax Exploration Company

3. ADDRESS OF OPERATOR: 50 W. Broadway, Suite 1000, Salt Lake City, Utah 84101

4. LOCATION OF WELL (Report location clearly and in accordance with any State requirements.* See also space 17 below.) At surface: See attached sheet.

4 copies

5. LEASE DESIGNATION AND SERIAL NO.: U-50376

6. IF INDIAN, ALLOTTEE OR TRIBE NAME: N/A

7. UNIT AGREEMENT NAME: N/A

8. FARM OR LEASE NAME: N/A

9. WELL NO.: See attached sheet.

10. FIELD AND POOL, OR WILDCAT:

11. SEC., T., R., M., OR BLK. AND SURVEY OR AREA: Sec. 20 & 21, 8S-17E

14. PERMIT NO.: See attached sheet.

15. ELEVATIONS (Show whether DF, RT, GR, etc.): See attached sheet.

12. COUNTY OR PARISH: Duchesne

13. STATE: Utah

16. Check Appropriate Box To Indicate Nature of Notice, Report, or Other Data

NOTICE OF INTENTION TO:				SUBSEQUENT REPORT OF:			
TEST WATER SHUT-OFF	[ ]	PULL OR ALTER CASING	[ ]	WATER SHUT-OFF	[ ]	REPAIRING WELL	[ ]
FRACTURE TREAT	[ ]	MULTIPLE COMPLETE	[ ]	FRACTURE TREATMENT	[ ]	ALTERING CASING	[ ]
SHOOT OR ACIDIZE	[ ]	ABANDON*	[ ]	SHOOTING OR ACIDIZING	[ ]	ABANDONMENT*	[ ]
REPAIR WELL	[ ]	CHANGE PLANS	[ ]	(Other)			
(Other) Construct gas gathering system			X	(NOTE: Report results of multiple completion on Well Completion or Recompletion Report and Log form.)			

17. DESCRIBE PROPOSED OR COMPLETED OPERATIONS: (Clearly state all pertinent details, and give pertinent dates, including estimated date of starting any proposed work. If well is directionally drilled, give subsurface locations and measured and true vertical depths for all markers and zones pertinent to this work.)*

Construct a gas gathering system for the subject wells. The system will consist of an 8" main line and with the exception of the #7-20 Well, a 3" feeder line from each well to the main line. The #7-20 Well will have a 4" feeder. The 8" main line will tie into a compressor/gas processing plant in the SE/SE of Section 20. A 4" surface line will transport the gas from the compressor site to the lease boundary. The 3" and 4" feeder lines, as well as the 8" main line, will be buried. A 3" gas fuel line will also be buried in the same ditch. The compressor site will contain a compressor (housed), condensate storage tank or tanks, gas separator, gas processing plant and generator (housed). The compressor site will occupy approximately two (2) acres. Initial volumes of gas to be transported will be approximately 1,500 MCFD. Construction will begin upon receipt of approval. See attached plat.

RECEIVED

MAY 29 1984

DIVISION OF OIL GAS & MINING

18. I hereby certify that the foregoing is true and correct

SIGNED David D. Perkins TITLE District Landman DATE May 16, 1984

(This space for Federal or State office use)

APPROVED BY TITLE DATE

CONDITIONS OF APPROVAL, IF ANY:

*See Instructions on Reverse Side

Title 18 U.S.C. Section 1001, makes it a crime for any person knowingly and willfully to make to any department or agency of the United States any false, fictitious or fraudulent statements or representations as to any matter within its jurisdiction.

Attached to that certain Sundry Notice dated May 16, 1984 for the Boundary Federal #7-20, #9-20, #15-20, #11-21 & #13-21 Wells on Lease U-50376.

Item 4. - Location of well:

#7-20 - 1941' FNL, 2059' FEL, Section 20, T8S-R17E
#9-20 - 1947' FSL, 650' FEL, Section 20, T8S-R17E
#15-20 - 509' FSL, 1994' FEL, Section 20, T8S-R17E
#11-21 - 1915' FSL, 2076' FWL, Section 21, T8S-R17E
#13-21 - 515' FSL, 517' FWL, Section 21, T8S-R17E

Item 9. - Well No.:

Boundary Federal #7-20
Boundary Federal #9-20
Boundary Federal #15-20
Boundary Federal #11-21
Boundary Federal #13-21

Item 14. - Permit No.:

#7-20 - 43013-30750
#9-20 - 43013-30690
#15-20 - 43013-30667
#11-21 - 43013-30752
#13-21 - 43013-30665

Item 15. - Elevations:

#7-20 - 5279 GR
#9-20 - 5266 GR
#15-20 - 5288 GR
#11-21 - 5240 GR
#13-21 - 5258 GR

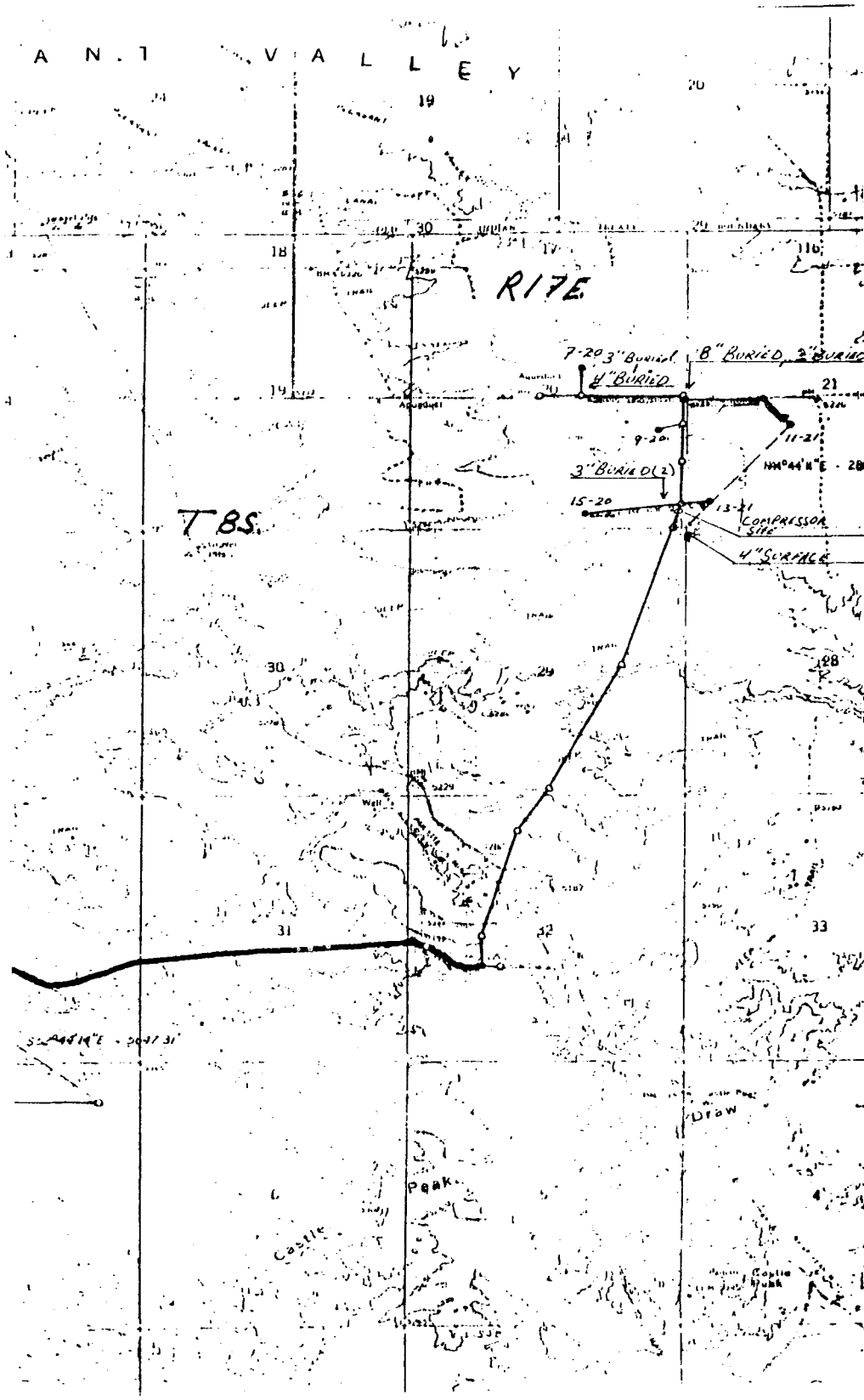

A N . T V A L L E Y
R17E
T8S
7-20 3" Buried
4" BURIED
8" BURIED
9-20
11-21
3" BURIED (2)
15-20
13-21
COMPRESSOR SITE
4" SURFACE
Draw
Peak
Castle

FORM 10

STATE OF UTAH
DIVISION OF OIL, GAS AND MINING
355 West North Temple, 3 Triad, Suite 350, Salt Lake City, UT 84180-1203

MONTHLY OIL AND GAS PRODUCTION REPORT

OPERATOR NAME AND ADDRESS:

KEBBIE JONES
LOMAX EXPLORATION COMPANY
PO BOX 1446
ROOSEVELT UT 84066

UTAH ACCOUNT NUMBER: N0580

REPORT PERIOD (MONTH/YEAR): 6 / 95

AMENDED REPORT ☐ **(Highlight Changes)**

Well Name API Number	Entity	Location	Producing Zone	Well Status	Days Oper	Production Volumes OIL(BBL)	GAS(MCF)	WATER(BBL)
FEDERAL 2-33 4301330749	10628	08S 16E 33	GRRV			U34173		
FEDERAL 14-28 4301330792	10628	08S 16E 28	GRRV			SL071572A		
WEST MONUMENT 10-28 4301330856	10628	08S 16E 28	GRRV			"		
TRAVIS FEDERAL 5-33 4301331435	10628	08S 16E 33	GRRV			U34173		
FEDERAL 7-23 4301330662	10629	09S 16E 23	GRRV			U15855		
BOUNDARY FED 11-21 4301330752	10630	08S 17E 21	GRRV			U50376		
DERAL #1-35 4301330561	10835	08S 16E 35	GRRV			U16535		
STATE 1-2 4301330596	10835	09S 16E 2	GRRV			ML21839		
STATE 13-36 4301330623	10835	08S 16E 36	GRRV			ML22061		
STATE #3-2 4301330627	10835	09S 16E 2	GRRV			ML21839		
FEDERAL #12-35 4301330744	10835	08S 16E 35	GRRV			U16535		
STATE 12-36 4301330746	10835	08S 16E 36	GRRV			ML22061		
FEDERAL 6-35 4301330751	10835	08S 16E 35	GRRV			U16535		
					TOTALS			

OMMENTS:

hereby certify that this report is true and complete to the best of my knowledge. Date:

ame and Signature: Telephone Number:

Lomax Exploration Company
A subsidiary of Inland Resources Inc.

LOMAX

July 13, 1995

State of Utah Department of Natural Resources
Attention: Ms Becky Pritchet
355 W. North Temple
3 Triad Center, Suite 400
Salt Lake City, Utah 84180-1204

RE: **Corporate Name Change**

Dear Sir or Madame:

Effective July 1, 1995, Lomax Exploration Company will have taken the steps necessary to change its name to **Inland Production Company**. A Certificate issued by the Texas Secretary of State evidencing the name change is attached for your files. We have also attached to this letter those Utah State leases (Exhibit "B") and wells (Exhibit "A") affected by this name change. We have attempted to provide a complete list from the records we have. The intent is to include all leases and wells that Lomax Exploration Company operates or has an interest in.

Riders changing the Principal from Lomax Exploration Company to Inland Production Company under Nationwide Oil and Gas Bond # 4488944 for Lomax Exploration Company will be furnished to the State of Utah in the very near future.

Please amend your records by substituting Inland Production Company in place of Lomax Exploration Company on the leases and wells listed on the attached exhibits. In the future we will begin submitting notices and permits for new operations after July 1, 1995 in the name of Inland Production Company.

Should a fee be required or should you need further information or documents relating to our name change please contact the undersigned at your convenience at the following number: (303) 292-0900 or Cheryl Cameron at our Roosevelt, Utah office (801) 722-5103.

Sincerely yours,

Chris A Potter, CPL
Manager of Land

file:g\chris\cp4041a.doc

The State of Texas

Secretary of State

JUNE 30, 1995

MIKE PARSONS...GLAST,PHILLIPS & MURRAY
2200 ONE GALLERIA TWR,13355 NOEL RD,LB48
DALLAS ,TX 75240-6657

RE:
INLAND PRODUCTION COMPANY
CHARTER NUMBER 00415304-00

IT HAS BEEN OUR PLEASURE TO APPROVE AND PLACE ON RECORD YOUR ARTICLES OF AMENDMENT. A COPY OF THE INSTRUMENT FILED IN THIS OFFICE IS ATTACHED FOR YOUR RECORDS.

THIS LETTER WILL ACKNOWLEDGE PAYMENT OF THE FILING FEE.

IF WE CAN BE OF FURTHER SERVICE AT ANY TIME, PLEASE LET US KNOW.

VERY TRULY YOURS,

Antonio O. Garza, Jr., Secretary of State

The State of Texas

Secretary of State

CERTIFICATE OF AMENDMENT

FOR

INLAND PRODUCTION COMPANY

FORMERLY

LOMAX EXPLORATION COMPANY
CHARTER NUMBER 00415304

THE UNDERSIGNED, AS SECRETARY OF STATE OF THE STATE OF TEXAS, HEREBY CERTIFIES THAT THE ATTACHED ARTICLES OF AMENDMENT FOR THE ABOVE NAMED ENTITY HAVE BEEN RECEIVED IN THIS OFFICE AND ARE FOUND TO CONFORM TO LAW.

ACCORDINGLY THE UNDERSIGNED, AS SECRETARY OF STATE, AND BY VIRTUE OF THE AUTHORITY VESTED IN THE SECRETARY BY LAW, HEREBY ISSUES THIS CERTIFICATE OF AMENDMENT.

DATED JUNE 29, 1995

EFFECTIVE JUNE 29, 1995

Antonio O. Garza, Jr., Secretary of State

ARTICLES OF AMENDMENT
TO THE
ARTICLES OF INCORPORATION
OF
LOMAX EXPLORATION COMPANY

FILED
In the Office of the
Secretary of State of Texas

JUN 29 1995

Corporations Section

Pursuant to the provisions of Part Four of the Texas Business Corporation Act, the undersigned corporation adopts the following articles of amendment to its Articles of Incorporation:

1. **Name.** The name of the corporation is LOMAX EXPLORATION COMPANY.

2. **Statement of Amendment.** The amendment alters or changes Article One of the original Articles of Incorporation to read in full as follows:

"Article One. The name of the corporation is INLAND PRODUCTION COMPANY."

3. **Shareholders.** The number of shares of the corporation outstanding at the time of such adoption was 205,315, there being 107,546 Common Shares and 97,769 Non-voting Preferred Shares; and the number of shares entitled to vote thereon was 107,546.

4. **Adoption by Shareholders.** Only the holders of Common Shares of the corporation are entitled to vote on the amendment. The shareholders adopted the foregoing amendment by unanimous written consent dated June 23, 1995, pursuant to the provisions of Article 9.10 of the Texas Business Corporation Act and, therefore, no notice was required to be delivered under said Article 9.10.

5. **Adoption by Board of Directors.** The Board of Directors adopted said amendment by a consent in writing signed by all Directors.

6. **Future Effective Date.** This amendment will become effective on July 1, 1995, at 12:01 a.m.

EXECUTED June 26, 1995.

Kyle R. Miller, President

S:\CLIENT-N09004\10\LOMAX.AMD

Lomax Exploration Company
A subsidiary of Inland Resources Inc.

Lomax

RECEIVED
JUL 14 1995
DIV. OF OIL, GAS & MINING

Announcing Our Name Change

From

Lomax Exploration Company

To

Inland Production Company

N5160 assigned 7/26/95. Lee

Field And Corporate Office Locations Remain The Same:

Corporate Office:
Inland Resources Inc.
475 Seventeenth Street, Suite 1500
Denver, CO 80202

Field Office:
W. Pole Line Road
P.O. Box 1446
Roosevelt, Utah 84066

475 Seventeenth Street • Suite 1500 • Denver, CO 80202 • 303-292-0900 • Fax 303-296-4070

United States Department of the Interior

BUREAU OF LAND MANAGEMENT

Utah State Office
P.O. Box 45155
Salt Lake City, Utah 84145-0155

RECEIVED
JUL 26 1995
DIV. OF OIL, GAS & MINING
JUL 25 1995

IN REPLY REFER TO:
3100
SL-065914 et al
(UT-923)

NOTICE

Inland Production Company	:	Oil and Gas Leases
475 Seventeenth St., Ste. 1500	:	SL-065914 et al
Denver, Colorado 80202	:	

Name Change Recognized

Acceptable evidence has been received in this office concerning the change of name of Lomax Exploration Company to Inland Production Company on Federal oil and gas leases.

The oil and gas lease files identified on the enclosed exhibit have been noted as to the name change. We are notifying the Minerals Management Service and all applicable Bureau of Land Management offices of the name change by a copy of this notice. If additional documentation for changes of operator are required by our Field Offices, you will be contacted by them.

For our purposes, the name change is recognized effective June 29, 1995 (Secretary of State's approval date).

Due to the name change, the name of the principal/obligor on the bond is required to be changed from Lomax Exploration Company to Inland Production Company on Bond No. 4488944 (BLM Bond No. UT0056). You may accomplish this name change either by consent of the surety on the original bond or by a rider to the original bond. Otherwise, a replacement bond with the new name should be furnished to this office. BLM Bond Nos. MT0771 and WY0821 should also be changed for the bonds held by Montana and Wyoming respectively.

/s/ ROBERT LOPEZ

Chief, Branch of Mineral
Leasing Adjudication

Enclosure
1-Exhibit (1 p)

cc: Hartford Accident & Indemnity Co.
Hartford Plaza
Hartford, CT 06115

bc: Moab District Office
Vernal District Office
Montana State Office
Wyoming State Office
Eastern States Office
MMS--Data Management Division, MS 3113, P.O. Box 5860, Denver, CO 80217
State of Utah, Attn: Lisha Cordova, Division of Oil, Gas & Mining,
355 West North Temple, 3 Triad Center, Suite 350, SLC, UT 84180
Teresa Thompson (UT-922)
Dianne Wright (UT-923)

EXHIBIT

SL-065914	U-36846	UTU-66185
SL-071572A	U-38428	UTU-67170
U-02458	U-45431	UTU-68548
U-15855	U-47171	UTU-69060
U-16535	U-50376	UTU-69061
U-26026	U-62848	UTU-72103
U-34173	UTU-65965	UTU-72104
U-36442	UTU-66184	UTU-73088

FAX COVER SHEET

Inland
RESOURCES INC.
475 17th Street, Suite 1500
Denver, CO 80202
303-292-0900, Fax #303-296-4070

DATE: August 8, 1995

TO: Lisha Cordova

COMPANY: State of Utah - Division of Oil, Gas and Mining

FAX NUMBER: 801 359 3940

FROM: Chris A Potter

NUMBER OF PAGES: 1 (INCLUDING COVER SHEET):

RE: Transfer of Authority to Inject
Lomax Exploration Company to Inland Production Company

I hope the info I sent to you August 1st was acceptable regarding our name change and your phone call to me last week.....

If there is anything missing or you need additional info, please let me know. I am located in our Denver office.....

Division of Oil, Gas and Mining
OPERATOR CHANGE WORKSHEET

Routing: (GIL)
1-~~LEC~~ 7-PL
2-LWP 8-SJ
3-~~DTS~~ 9-FILE
4-VLD
5-RJF
6-LWP

Attach all documentation received by the division regarding this change.
Initial each listed item when completed. Write N/A if item is not applicable.

XXX Change of Operator (well sold) ☐ Designation of Agent
☐ Designation of Operator ☐ Operator Name Change Only

The operator of the well(s) listed below has changed (EFFECTIVE DATE: 6-29-95 (MERGER))

TO (new operator)	FROM (former operator)
INLAND PRODUCTION COMPANY	LOMAX EXPLORATION COMPANY
(address) PO BOX 1446	(address) PO BOX 1446
ROOSEVELT UT 84066	ROOSEVELT UT 84066
KEBBIE JONES	KEBBIE JONES
phone (801) 722-5103	phone (801) 722-5103
account no. N 5160	account no. N 0580

Well(s) (attach additional page if needed):

Name	API	Entity	Sec	Twp	Rng	Lease Type
SEE ATTACHED	013-30752					

OPERATOR CHANGE DOCUMENTATION

Lec 1. (Rule R615-8-10) Sundry or other legal documentation has been received from former operator (Attach to this form). (Rec'd 7-14-95)

N/A 2. (Rule R615-8-10) Sundry or other legal documentation has been received from new operator (Attach to this form).

Lec 3. The Department of Commerce has been contacted if the new operator above is not currently operating any wells in Utah. Is company registered with the state? (yes/no) ____ If yes, show company file number: ____. (7-28-95)

Lec 4. **(For Indian and Federal Wells ONLY)** The BLM has been contacted regarding this change (attach Telephone Documentation Form to this report). Make note of BLM status in comments section of this form. Management review of **Federal and Indian** well operator changes should take place prior to completion of steps 5 through 9 below.

Lec 5. Changes have been entered in the Oil and Gas Information System (Wang/IBM) for each well listed above. (7-31-95)

LWP 6. Cardex file has been updated for each well listed above. 8-16-95

LWP 7. Well file labels have been updated for each well listed above. 8-22-95

Lec 8. Changes have been included on the monthly "Operator, Address, and Account Changes" memo for distribution to State Lands and the Tax Commission. (7-31-95)

Lec 9. A folder has been set up for the Operator Change file, and a copy of this page has been placed there for reference during routing and processing of the original documents.

- OVER -

OPERATOR CHANGE WORKSHEET (CONTINUED) Initial each item when completed. Write N/A if item is not applicable.

ENTITY REVIEW

Yes 1. (Rule R615-8-7) Entity assignments have been reviewed for all wells listed above. Were entity changes made? (yes/no) ____ (If entity assignments were changed, attach copies of Form 6, Entity Action Form).

N/A 2. State Lands and the Tax Commission have been notified through normal procedures of entity changes.

BOND VERIFICATION (~~Fee wells only~~) Trust Lands Admin. / Rider or Repl. in Progress.

N/A/Yes 1. (Rule R615-3-1) The new operator of any fee lease well listed above has furnished a proper bond.

___ 2. A copy of this form has been placed in the new and former operators' bond files.

___ 3. The former operator has requested a release of liability from their bond (yes/no) ___. Today's date _____ 19___. If yes, division response was made by letter dated _____ 19___.

LEASE INTEREST OWNER NOTIFICATION RESPONSIBILITY

N/A 1. (Rule R615-2-10) The former operator/lessee of any **fee lease** well listed above has been notified by letter dated _____ 19___, of their responsibility to notify any person with an interest in such lease of the change of operator. Documentation of such notification has been requested.

OTS 2. Copies of documents have been sent to State Lands for changes involving **State leases**. 8/23/95 Sent to Ed Bonner

FILMING

✓ 1. All attachments to this form have been microfilmed. Date: August 30 1995.

FILING

___ 1. Copies of all attachments to this form have been filed in each well file.

___ 2. The original of this form and the original attachments have been filed in the Operator Change file.

COMMENTS

950726 Blm/SL Aprv. eff. 6-29-95.

WE71/34-35

STATE OF UTAH
DIVISION OF OIL, GAS AND MINING

RECEIVED
MAR 26 1996
DIV OF OIL, GAS & MINING

APPLICATION FOR INJECTION WELL - UIC FORM 1

OPERATOR Inland Production Company
ADDRESS P.O. Box 1446
Roosevelt, UT 84066

Well name and number: Boundary Federal #11-21

Field or Unit name: Treaty Boundary Lease no. UTU-50376

Well location: QQ NESW section 21 township 8S range 17E county Duchesne

Is this application for expansion of an existing project? . . Yes [X] No []

Will the proposed well be used for: Enhanced Recovery? . . Yes [X] No []
Disposal? . . . . . Yes [] No [X]
Storage? . . . . . Yes [] No [X]

Is this application for a new well to be drilled? . . . . . Yes [] No [X]

If this application is for an existing well,
has a casing test been performed on the well? . . . . . Yes [] No []
Date of test:
API number: 43-013-30752

Proposed injection interval: from 4000' to 6000'

Proposed maximum injection: rate 1000 BWIPD pressure 2000# psig

Proposed injection zone contains [X] oil, [X] gas, and/or [] fresh water within ½ mile of the well.

IMPORTANT: Additional information as required by R615-5-2 should accompany this form.

List of Attachments: Exhibits A, A-1, B, C-1, C-2, C-3, D, E-1 through E-13

I certify that this report is true and complete to the best of my knowledge.

Name Brad Mecham
Title Operations Manager
Phone No. (801) 722-5103

Signature Brad Mecham
Date 3/20/96

(State use only)
Application approved by _____ Title _____
Approval Date _____

Comments:

(3/89)

REQUIREMENTS FOR INJECTION OF FLUIDS INTO RESERVOIRS
RULE R615-5-1

1) Operations to increase ultimate recovery, such as cycling of gas, the maintenance of pressure, the introduction of gas, water or other substances into a reservoir for the purpose of secondary or other enhanced recovery or for storage and the injection of water into any formation for the purpose of water disposal shall be permitted only by order of the Board after notice and hearing.

2) A request for agency action for authority for the injection of gas, liquefied petroleum gas, air, water or any other medium into any formation for any reason, including but not necessarily limited to the establishment of or the expansion of waterflood projects, enhanced recovery projects, and pressure maintenance projects shall contain:

2.1. *The name and address of the operator of the project;*

Answer: Inland Production Company
P.O. Box 1446
W. Poleline Road
Roosevelt, Utah 84066

2.2. *A plat showing the area involved and identifying all wells, including all proposed injection wells, in the project area and within one-half mile radius of the project area;*

Answer: Reference Exhibit A

2.3. *A full description of the particular operation for which approval is requested;*

Answer: To approve the conversion of a producing well to an injection well in the Treaty Boundary, Lease # UTU 50376.

2.4. *A description of the pools from which the identified wells are producing or have produced;*

Answer: The proposed injection well is currently producing oil and gas from the Green River Formation, specifically the "C" Sand which has been previously been utilized (under Lease #UTU-50376) for production.

2.5. *The names, description and depth of the pool or pools to be affected;*

Answer: The Green River Formation pool targeted for injection is the "C" sand with a gamma ray derived top as follows:

#11-21 "C" sand @ 5417'

The injection zones are a porous and permeable lenticular calcareous sandstone. The porosity of the sandstone is inter granular. The confining impermeable stratum directly above and below the injection zones are composed of tight, moderately calcareous lacustrine shales.

2.6. *A copy of a log of a representative well completed in the pool;*

Answer: Referenced log Boundary Federal #11-21 is currently on file with the Utah Division of Oil, Gas & Mining and Bureau of Land Management.

2.7. *A statement as to the type of fluid to be used for injection, its source and the estimated amounts to be injected daily;*

Answer: Culinary water from Johnson Water District supply line.
Estimated Injection Rate: 200 - 400 BPD
Maximum Injection Rate: 1000 BWIPD

2.8. *A list of all operators or owners and surface owners within a one-half mile radius of the proposed project;*

Answer: Reference Exhibit A-1

2.9. *An affidavit certifying that said operators or owners and surface owners within a one-half mile radius have been provided a copy of the petition for injection;*

Answer: Reference Exhibit D.

2.10. *Any additional information the Board may determine is necessary to adequately review the petition.*

Answer: Inland will supply any additional information requested.

4.0. *Establish recovery projects may be expanded and additional wells placed on injection only upon authority from the board after notice and hearing or by administrative approval.*

Answer: This proposed injection well is in the Treaty Boundary Lease # 50376, and the request is for administrative approval.

REQUIREMENTS FOR CLASS II INJECTION WELLS INCLUDING WATER DISPOSAL, STORAGE AND ENHANCED RECOVERY WELLS
SECTION V - RULE 615-5-2

1) Injection well shall be completed, equipped, operated, and maintained in a manner that will prevent pollution and damage to any USDW, or other resources and will confine injected fluids to the interval approved.

2) The application for an injection well shall include a properly completed Form DOGM-UIC-1 and the following:

2.1. *A plat showing the location of the injection well, all abandoned or active wells within a one-half mile radius of the proposed wells, and the surface owner and the operator of any lands or producing leases, respectively, within a one-half mile radius of the proposed injection well;*

Answer: Reference Exhibit A and A-1

2.2. *Copies of electrical or radioactive logs, including gamma ray logs, for the proposed well run prior to the installation of casing and indicating resistivity, spontaneous potential, caliper and porosity;*

Answer: Reference log currently on file with the Utah Division of Oil, Gas & Mining and the Bureau of Land Management.

2.3. *A copy of a cement bond or comparable log run for the proposed injection well after casing was set and cemented;*

Answer: Reference log currently on file with the Utah Division of Oil, Gas & Mining and the Bureau of Land Management.

2.4 *Copies of log already on file with the Division should be referenced, but need not to be refiled.*

Answer: The cement bond logs currently on file with the Utah Division of Oil, Gas & Mining and the Bureau of Land Management.

2.5 *A description of the casing or proposed casing program of the injection well and of the proposed method for testing the casing before use of the well;*

Answer: Reference Exhibit E-8 and E-9
A casing integrity test will be conducted upon conversion.

2.6. *A statement as to the type of fluid to be used for injection, its source and estimated amounts to be injected daily.*

Answer: Culinary water from our pre approved Johnson Water district supply line.
Estimated Injection Rate: 200 - 400 BPD
Maximum Injection Rate: 1000 BWIPD
See Exhibit "B"

2.7. *Standard laboratory analysis of (1) the fluid to be injected, (2) the fluid in the formation into which the fluid is being injected, and (3) the compatibility of the fluids.*

Answer: Reference Exhibits C-l, C-2, and C-3. (Samples taken from the Gilsonite State #7-32 source water line).

2.8. *The proposed average and maximum injection pressures;*

Answer: Average Injection Pressure will be determined upon conversion by a Step Rate Test. Maximum injection pressure will be 2000#.

2.9. *Evidence and data to support a finding that the proposed injection well will not initiate fractures through the overlying strata or a confining interval that could enable the injected fluid or formation fluid to enter the fresh water strata;*

Answer: The frac gradients for the field averages to be 0.84 psig/ft. The maximum injection pressures will be kept below this gradient. A step rate test will be performed periodically to ensure we are below parting pressure.

2.10. *Appropriate geological data on the injection interval and confining beds, including the geologic name, lithologic description, thickness, depth, and lateral extent;*

Answer: The injection zone is "C" sandstone reservoir found within the Douglas Creek Member of the Green River Formation. The Douglas Creek is composed of porous and permeable lenticular calcareous sandstones and low porosity carbonates and calcareous shales.

INJECTION ZONE TOP #11-21 "C" Sand 5417'

The confining stratum directly above and below the injection zone is the Douglas Creek member of the Green River Formation. The strata confining the injection zone is composed of tight, moderately calcareous sandy lacustrine shales. All of the confining strata is impermeable and it will effectively seal off the oil, gas, and water of the injection zone from any strata directly above or below it. Maps and cross sections to the Treaty Boundary area are on file with the Division of Oil, Gas & Mining and also with the U. S. Bureau of Land Management.

2.11. *A review of the mechanical condition of each well within a one-half mile radius of the proposed injection well to assure that no conduit exists that could enable fluids to migrate up or down the wellbore and enter improper intervals;*

Answer: Exhibits E-1 through E-13

The injection system will be equipped with high and low pressure shut-down devices which will automatically shut-in injection waters if a system blockage or leakage occurs. One way check valves will also insure proper flow management. Relief valves will also be utilized for high pressure relief.

2.12. *An affidavit certifying that a copy of the application has been provided to all operators or owners, and surface owners within a one-half mile radius of the proposed injection well;*

Answer: Exhibit D.

2.13 *Any other additional information that the Board or Division may determine is necessary to adequately review the application.*

Answer: **Inland Production will await review of this application and additional information will be submitted if required.**

3) **Applications for injection wells which are within a recovery project area will be considered for approval.**

   3.1. **Pursuant to Rule 615-5-1-3**

   3.2. **Subsequent to Board approval of a recovery project pursuant to Rule 615-5-1-3.**

4) **Approval of an injection well is subject to the requirements of Rule 615-5-4, if the proposed injection interval can be classified as an USDW.**

5) **In addition to the requirements of this section, the provisions of Rule 615-3-1, R615-3-4, R615-3-24, R615-3-32, R615-8-1 and R615-10 apply to all Class II injection wells.**

INLAND PRODUCTION COMPANY

Boundary Federal #11-21
NE/SW Sec. 21, T8S, R17E
Duchesne County, Utah

PLUGGING & ABANDONMENT PLAN

The plugging and abandonment plan consists of the following plugs:

Plug #1
Set a 30 sk cement plug from 3650' - 3850'

Plug #2
Set a 30 sk cement plug from 2400' - 2200'
(Across the top of the Green River Formation)

Plug #3
Set a 15 sk cement plug from 353' - 253'

Plug #4
Set 10 sx cement plug from surface - 50'

All cement plugs will be placed with tubing using Class "G" cement w/ 2% CaCl. Fresh water will be placed between all cement plugs.

EXHIBIT "A"

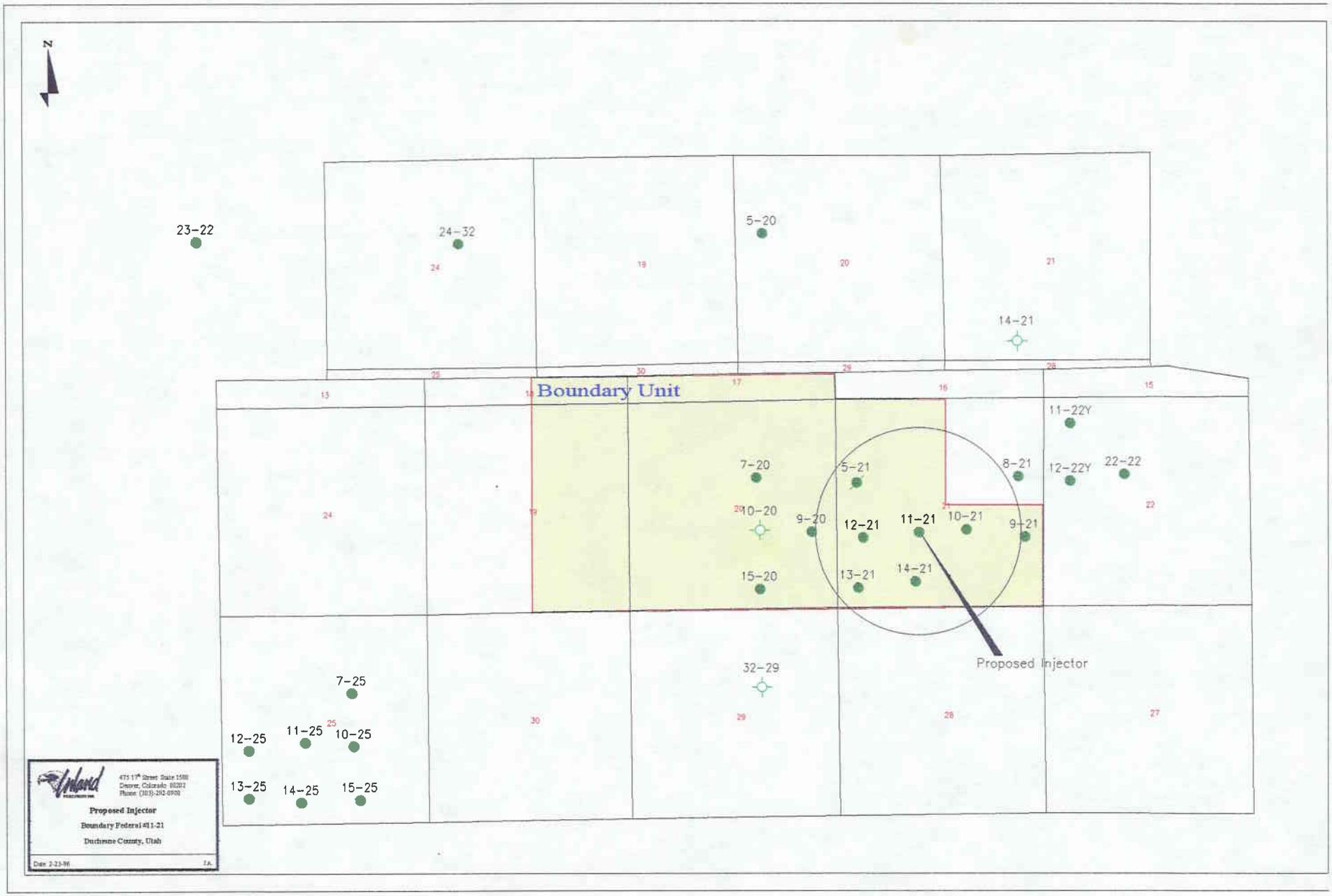
N
23-22
24-32
5-20
14-21
Boundary Unit
11-22Y
7-20
5-21
8-21
12-22Y
22-22
10-20
9-20
12-21
11-21
10-21
9-21
15-20
13-21
14-21
Proposed Injector
32-29
7-25
12-25
11-25
10-25
13-25
14-25
15-25
Proposed Injector
Boundary Federal #11-21
Duchesne County, Utah
Date: 2-23-96

EXHIBIT A-1

SURFACE OWNERS, AND OPERATORS WITHIN A ONE-HALF MILE RADIUS OF THE BOUNDARY FEDERAL #11-21

John and Brenda Price
1170 Center Street
Midway, Utah 84040

Brad and Joann Nelson
P.O. Box 638
Roosevelt, Utah 84066

Arvil Harris
2533 East 6200 South
Salt Lake City, Utah 84121

L. Clark and Barbara Roberts
Myton, Utah 84052

UTAH–DUCHESNE CO.
MINUTE SERIES (TOPOGRAPHIC)

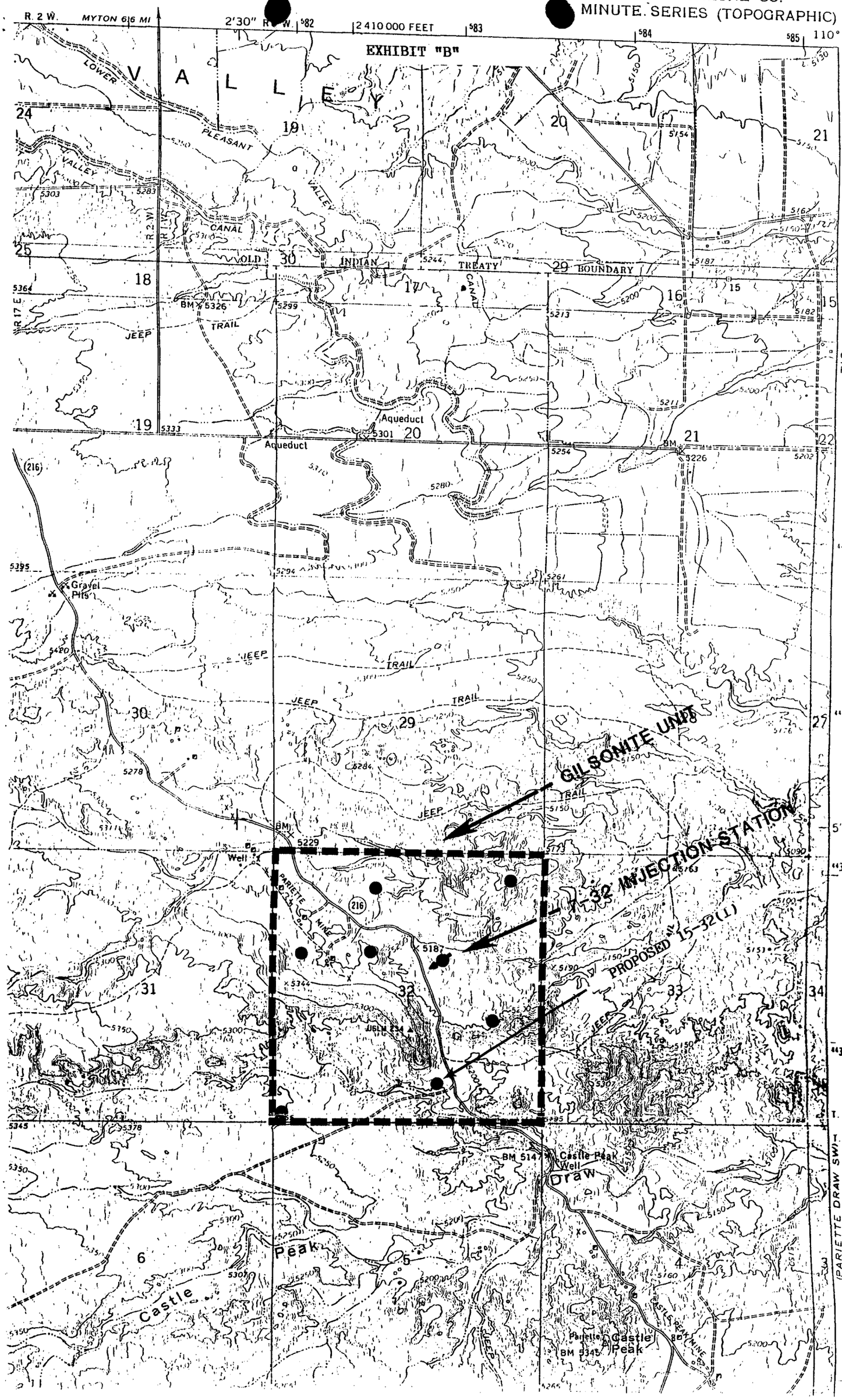

EXHIBIT C-1

AQUAMIX SCALING PREDICTIONS

COMPANY: Inland 03-20-96
LOCATION:
SYSTEM:

WATER DESCRIPTION: 11-21 Boundary Fedral

	INPUT ANALYSIS	VALUES USED IN CALCULATIONS
P-ALK AS PPM CaCO3	2379	2379
M-ALK AS PPM CaCO3	3050	3050
SULFATE AS PPM SO4	0	
CHLORIDE AS PPM Cl	12000	12000
HARDNESS AS PPM CaCO3	160	160
CALCIUM AS PPM CaCO3	64	64
MAGNESIUM AS PPM CaCO3	0	
SODIUM AS PPM Na	8855	8855
BARIUM AS PPM Ba	0	
STRONTIUM AS PPM Sr	0	
CONDUCTIVITY	0	0
TOTAL DISSOLVED SOLIDS	23951	22711
TEMP (DEG-F)	100	
SYSTEM pH	7.8	
pH		7.8

RESULTS:

IONIC STRENGTH-MOLAL	.381
SPECIFIC GRAVITY (EST. VALUE)	1.02
TOTAL DISSOLVED SOLIDS-PPM (EST. VALUE)	22711

SCALING PREDICTIONS OVER A RANGE OF TEMPERATURES:

DEG-F	STIFF DAVIS CaCO3 INDEX	lbs/1000 BBL EXCESS CaCO3	mg/l BaSO4 IN EXCESS OF SATURATION	mg/l SrO4 IN EXCESS OF SATURATION	mg/l Gypsum IN EXCESS OF SATURATION
80	.04	1	0	0	0
100	.31	11	0	0	0
120	.57	16	0	0	0
140	.90	19	0	0	0
160	1.22	21	0	0	0
180	1.62	21	0	0	0
200	2.03	22	0	0	0

EXHIBIT C-2

AQUAMIX SCALING PREDICTIONS

COMPANY: Inland 03-20-96
LOCATION:
SYSTEM:

WATER DESCRIPTION: 5-35 Injection Station

	INPUT ANALYSIS	VALUES USED IN CALCULATIONS
P-ALK AS PPM CaCO3	195	195
M-ALK AS PPM CaCO3	250	250
SULFATE AS PPM SO4	0	
CHLORIDE AS PPM Cl	150	150
HARDNESS AS PPM CaCO3	220	220
CALCIUM AS PPM CaCO3	48	48
MAGNESIUM AS PPM CaCO3	24	24
SODIUM AS PPM Na	92	92
BARIUM AS PPM Ba	0	
STRONTIUM AS PPM Sr	0	
CONDUCTIVITY	0	0
TOTAL DISSOLVED SOLIDS	542	417
TEMP (DEG-F)	100	
SYSTEM pH	7.8	
pH		7.8

RESULTS:

IONIC STRENGTH-MOLAL	.006
SPECIFIC GRAVITY (EST. VALUE)	1
TOTAL DISSOLVED SOLIDS-PPM (EST. VALUE)	417

SCALING PREDICTIONS OVER A RANGE OF TEMPERATURES:

DEG-F	STIFF DAVIS CaCO3 INDEX	lbs/1000 BBL EXCESS CaCO3	mg/l BaSO4 IN EXCESS OF SATURATION	mg/l SrO4 IN EXCESS OF SATURATION	mg/l Gypsum IN EXCESS OF SATURATION
80	-.26	0	0	0	0
100	-.03	0	0	0	0
120	.18	5	0	0	0
140	.39	9	0	0	0
160	.57	11	0	0	0
180	.81	13	0	0	0
200	1.14	15	0	0	0

EXHIBIT C-3

AQUAMIX SCALING PREDICTIONS

COMPANY: Inland 03-20-96
LOCATION:
SYSTEM:

WATER DESCRIPTION:	11-21 Boundary Fe	5-35 Injection St
P-ALK AS PPM CaCO3	2379	195
M-ALK AS PPM CaCO3	3050	250
SULFATE AS PPM SO4	0	0
CHLORIDE AS PPM Cl	12000	150
HARDNESS AS PPM CaCO3	160	220
CALCIUM AS PPM CaCO3	64	48
MAGNESIUM AS PPM CaCO3	0	24
SODIUM AS PPM Na	8855	92
BARIUM AS PPM Ba	0	0
STRONTIUM AS PPM Sr	0	0
CONDUCTIVITY	0	0
TOTAL DISSOLVED SOLIDS	23951	542
TEMP (DEG-F)	100	100
SYSTEM pH	7.8	7.8

WATER COMPATIBILITY CALCULATIONS
11-21 Boundary Fe AND 5-35 Injection St
CONDITIONS: TEMP.=100AND pH=7.8
WATER ONE IS 11-21 Boundary Fe

% OF WATER # 1	STIFF DAVIS CaCO3 INDEX	lbs/1000 BBL EXCESS CaCO3	mg/l BaSO4 IN EXCESS OF SATURATION	mg/l SrO4 IN EXCESS OF SATURATION	mg/l Gypsum IN EXCESS OF SATURATION
100	.31	11	0	0	0
90	.31	10	0	0	0
80	.31	10	0	0	0
70	.30	10	0	0	0
60	.28	9	0	0	0
50	.26	8	0	0	0
40	.29	9	0	0	0
30	.29	8	0	0	0
20	.27	7	0	0	0
10	.19	5	0	0	0
0	-.03	0	0	0	0

EXHIBIT D

RE: Application for Approval of Class II Injection Well
Boundary Federal #11-21

I certify that a copy of the application has been provided to all surface owners within a one-half mile radius of the proposed injection well.

Brad Mecham

INLAND PRODUCTION COMPANY
Brad Mecham
Operations Manager

Sworn to and subscribed before me the 21 day of February 1996.

Kebbie S. Jones

Notary Public in and for the State of Utah

Printed Name: Kebbie S. Jones
My Commission Expires: 5/4/98

Notary Public
KEBBIE S. JONES
P.O. Box 1449
Roosevelt, Utah 84066
My Commission Expires
May 4, 1998
State of Utah

EXHIBIT E-1

Boundary Federal #7-20

Wellbore Diagram

Well History:

11-3-83	Spud Well
11-20-83	Perf: 5,814'-5,826', 5,832'-5,839', 5,853'-5,864'
11-25-83	Frac LODC zone as follows: Totals 26,760 gal, 119,080#20/40 sd Max TP 2,990 @ 5 BPM Avg TP 2,600 @ 45 BPM ISIP 1,800, after 5 min 1,680
1-26-88	Perf: 5,336'-5,344', 5,363'-5,366'
1-27-88	Frac D-2 zone as follows: Totals 26,000 gal, 95,500# 16/30 sd Max TP 3,000 @ 25 BPM

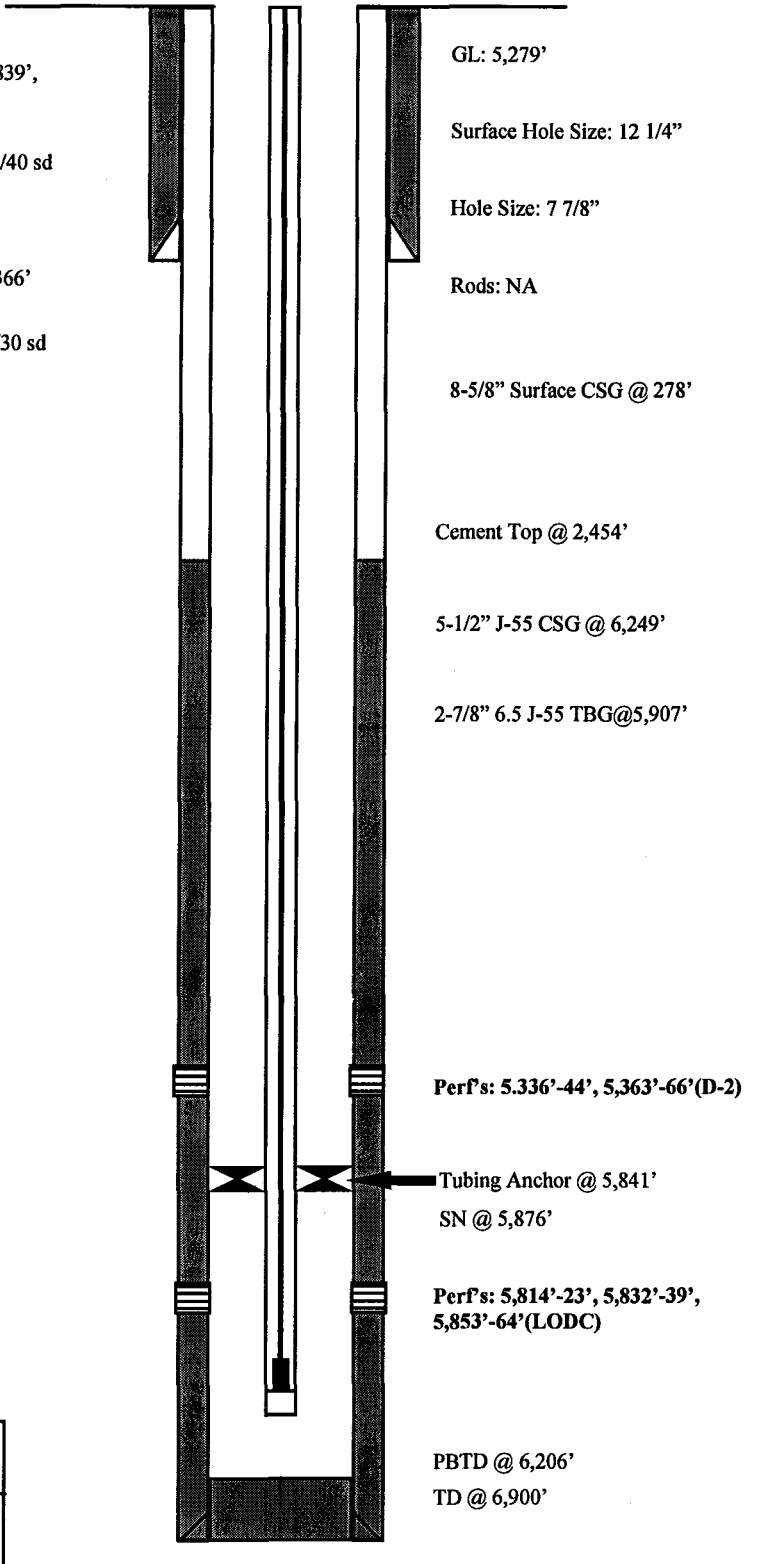

Inland Resources Inc.

Boundary Federal #7-20

1941 FNL 2059 FEL

SWNE Section 20-T8S-R17E

Duchesne Co, Utah

API #43-013-30750; Lease #U-50376

EXHIBIT E-2

Boundary Federal #9-20

Wellbore Diagram

Well History:

11-18-82	Spud Well
11-13-82	Perf: 6,678'-6,688'
11-25-83	Frac BGR zone as follows: Totals 20,400 gal, 44,500#20/40 sd Max TP 3,500 @ 20 BPM Avg TP 3,100 @ 25 BPM ISIP 2,360, after 5 min 2,300
12-10-82	Perf: 6,130'-6,154'
12-11-82	Frac CP-1 zone as follows: Totals 36,000 gal, 115,000# 20/40 sd Avg TP 1,900\ ISIP 3,700, after 5 min 2,750
3-23-83	Perf: 5,295'-5,315'
	Frac D-2 zone as follows: Totals 22,500 gal, 63,500# 20/40 sd Avg TP 2,300
10-14-83	Perf: 4,765'-4,791'
	Frac GB-6 zone as follows: Totals 1,500 gal Max TP 5,500 @ 0 BPM Avg TP 4,000 @ 8 BPM

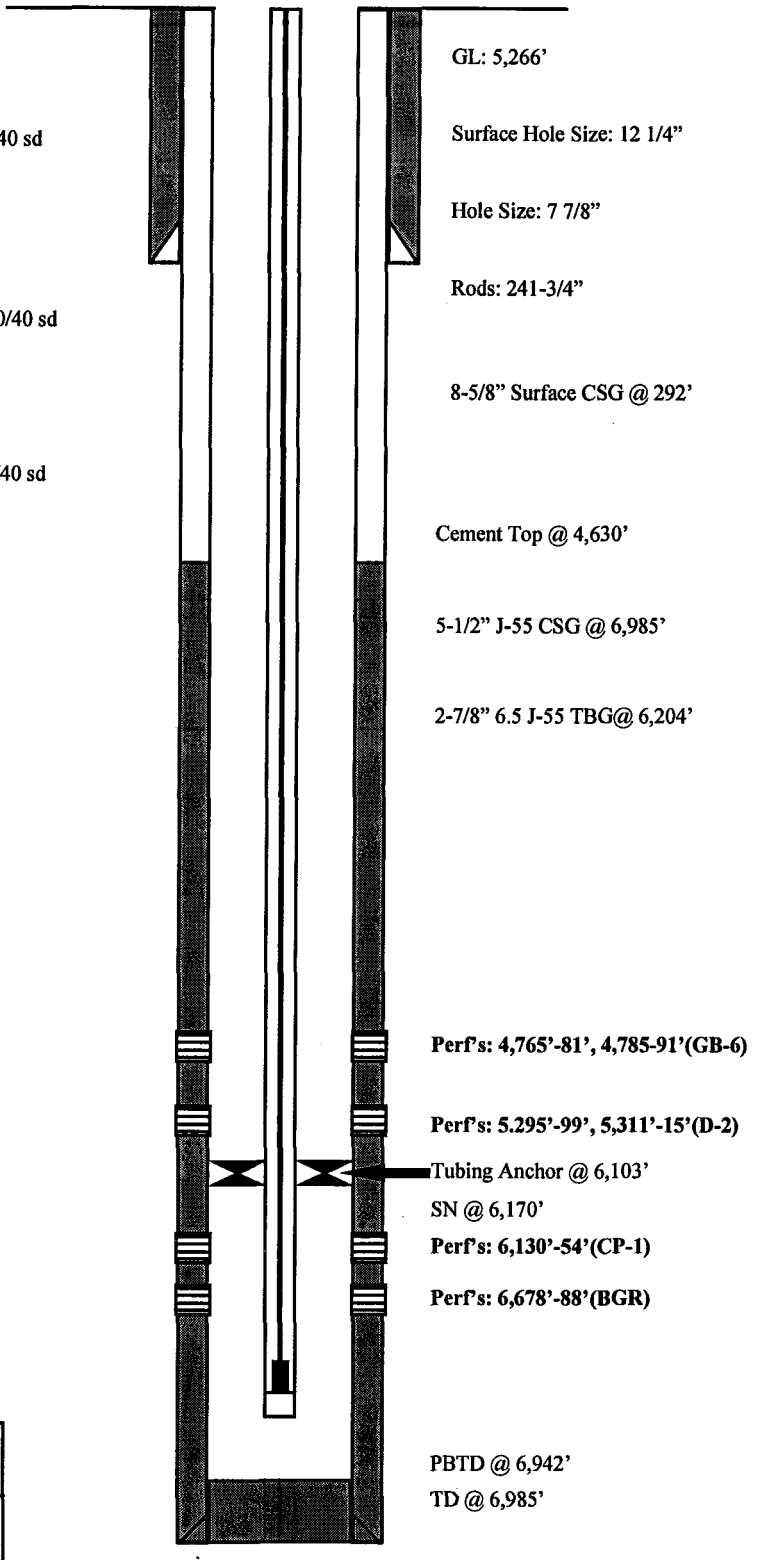

Inland Resources Inc.

Boundary Federal #9-20

1947 FSL 650 FEL

NESE Section 20-T8S-R17E

Duchesne Co, Utah

API #43-013-30690; Lease #U-50376

EXHIBIT E-3

Boundary Federal #15-20

Wellbore Diagram

Well History:

6-30-83	Spud Well
7-21-83	Perf: 5,789'-5,792', 5,802'-5,816', 5,824'-5,846'
7-22-83	Frac LODC zone as follows: Totals 49,000 gal, 152,000# 20/40 sd Avg TP 3,000
1-31-92	Perf: 5,787'-5,792', 5,802'-5,816', 5,824'-5,847'
2-1-92	Refrac LODC zone as follows: Totals 62,700 gal, 30,000# 20/40 sd 137,000# 16/30 sd Avg TP 3,100

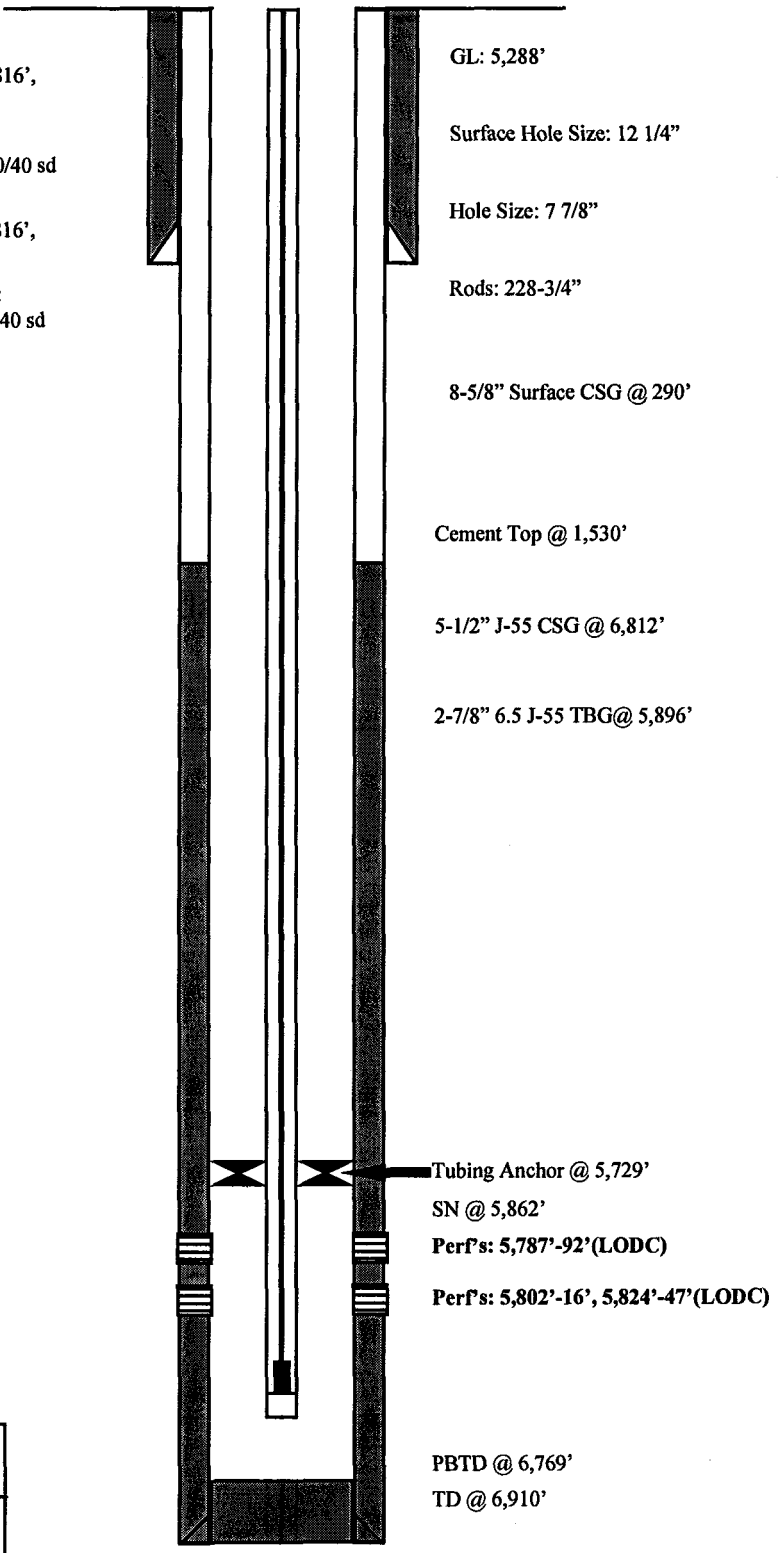

Inland Resources Inc.

Boundary Federal #15-20

509 FSL 1994 FEL

SWSE Section 20-T8S-R17E

Duchesne Co, Utah

API #43-013-30667; Lease #U-50376

EXHIBIT E-4

Boundary Federal #5-21

Wellbore Diagram

Well History:

6-21-84	Spud Well
8-5-84	Perf: 5,375-5,383', 5,350'-5,356'
8-9-84	Frac d-2 zone as follows: Totals 18,800 gal, 51,800# 20/40 sd Max TP 3,500 @ 24 BPM Avg TP 2,000 @ 25 BPM ISIP 1,650, after 5 min 1,160
8-23-84	Perf: 6,154'-6,163', 6,170'-6,178'
	Frac CP-1 zone as follows: Totals 2,500 gal, Avg TP 2,100 @ 5 BPM
9-11-95	**SHUT IN.** Pull Rods and Tbg.

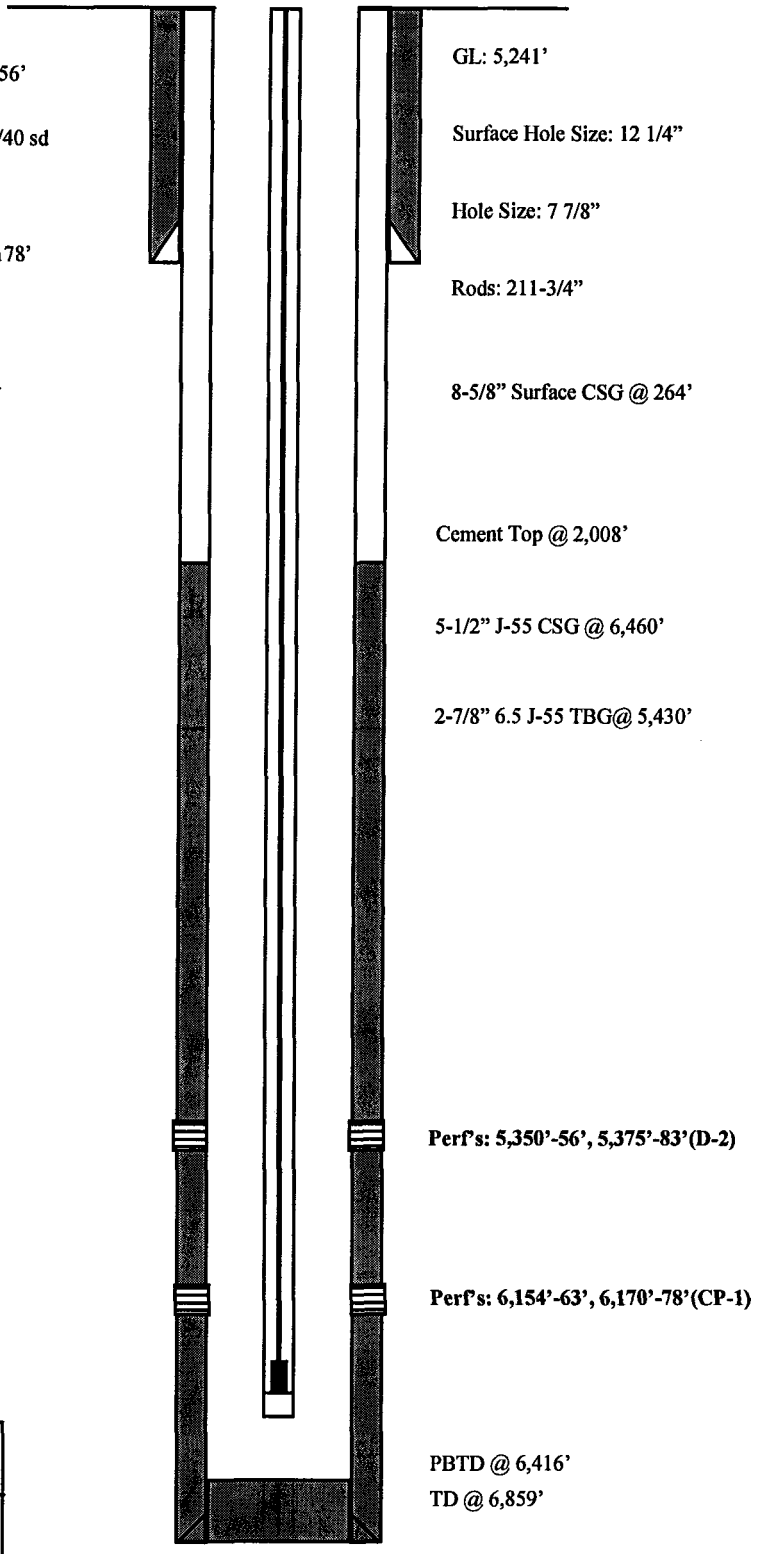

Inland Resources Inc.

Boundary Federal #5-21

660 FWL 1981 FNL

SWNW Section 21-T8S-R17E

Duchesne Co, Utah

API #43-013-30822; Lease #U-50376

EXHIBIT E-5

Boundary Federal #8-21

Wellbore Diagram

Well History:

11-5-95	Spud Well
12-23-95	Perf: 6,138' - 44' 6,148' - 70' 6,179' -88' 6,223 - 40' 2spf Castlet Peak Sands
12-24-95	Frac Castle Peak Zones as follows: Totals 834 bbls Boragel, 109,400# 20/40 sd. Avg rate 43 BPM @ 1800 psi. ISIP: 1759 psi, 5 min.; 1588 psi, 10 min: 1457 psi.
12-27-95	Perf: 5,295-305' D Sand
12-28-95	Frac D Sand as follows: Totals 382 bbls Boragel 39,300# 20/40 sd. Avg rate 20 BPM @ 1900 psi. ISIP 2083 psi, 5 min: 1972 psi, 10 min: 1935 psi.
12-29-95	Perf: 4,742'-47' GB-4 4,819'-31' GB-6 4 SPF
12-30-95	Frac GB-4 & GB-6 Sands as follows: Totals 592 bbls Boragel, 69,000# 16/30 sd. Avg rate 31 BPM @ 2000 psi. ISIP 2100 psi, 5 min: 2081 psi, 10 min: 2080 psi.
1-7-96	1st Day of Production

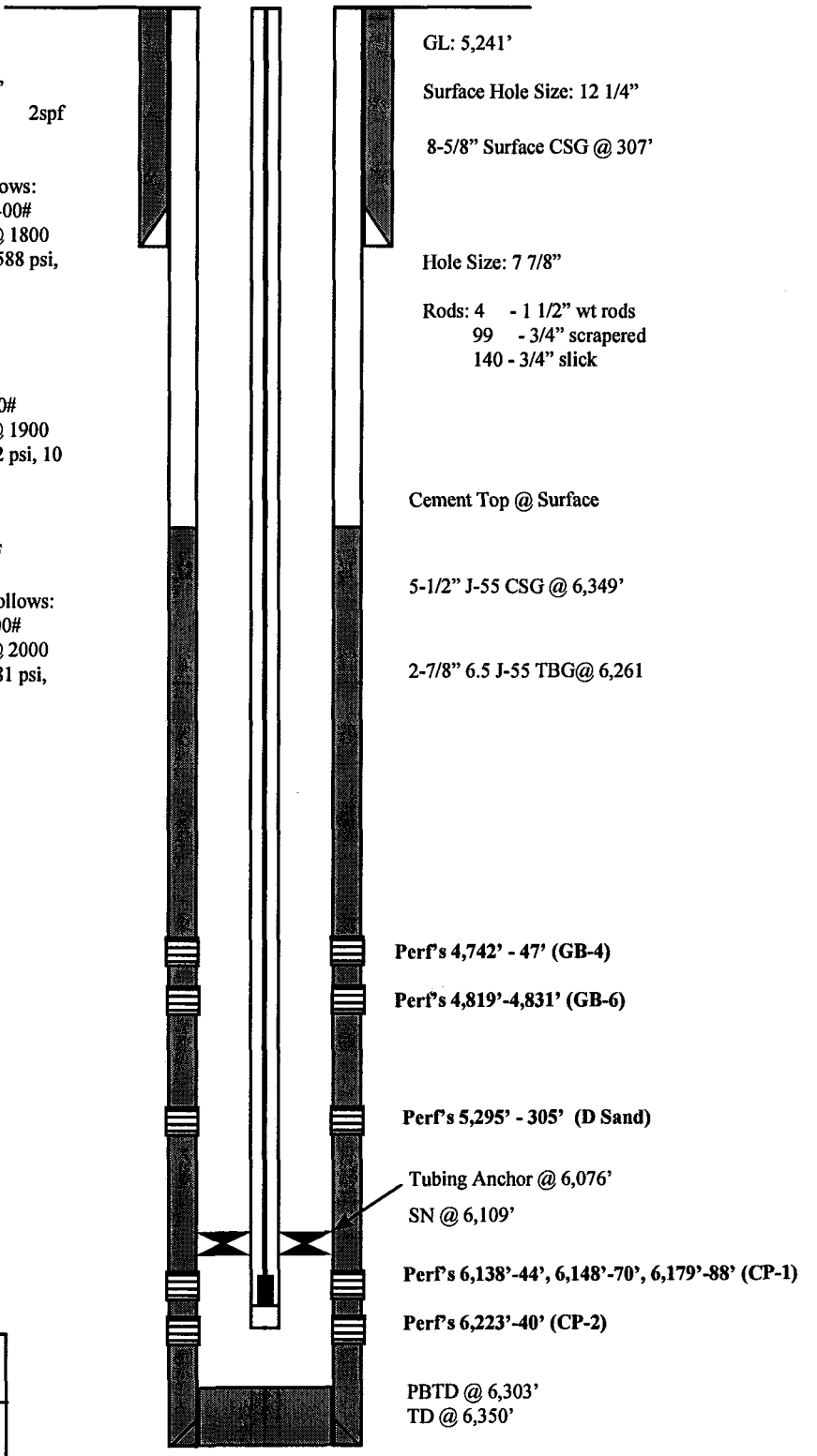

Inland Resources Inc.

Boundary Federal #8-21

1960 FNL 465 FEL

SENE Section 21-T8S-R17E

Duchesne Co, Utah

API #43-013-31557; Lease #U-50376

EXHIBIT E-6

Boundary Federal #9-21

Wellbore Diagram

Well History:

8-23-95	Spud Well
9-16-95	Perf: 6,190'-6,201', 6,115'-6,144'
9-20-95	Frac CP-1 and CP-2 zones as follows: Totals 33,050 gal, 163,350#20/40 sd Max TP 1,895 @ 36.4 BPM Avg TP 1,450 @ 35 BPM ISIP 1,895, after 5 min 1,822
9-21-95	Perf: 5,860'-5,876', 5,879'-5,884'
9-22-95	Frac LODC zone as follows: Totals 31,000 gal, 152,000# 20/40 sd Max TP 2,520 @ 41.3 BPM Avg TP 2,200 @ 38 BPM ISIP 2,300, after 5 min 2,243
9-23-95	Perf: 5,448'-5,453'
9-24-95	Frac C-Sd zone as follows: Totals 12,960 gal, 60,000# 20/40 sd Max TP 3,980 @ 27.8 BPM Avg TP 1,550 @ 25 BPM ISIP 1,462, after 5 min. 1,365
9-26-95	Perf: 4,828'-4,848'
9-27-95	Frac GB-7 zone as follows: Totals 27,457 gal, 79,700# 16/30 sd Max TP 2,450 @ 26.6 BPM Avg TP 1,900 @ 24.5 BPM ISIP 2,237, after 5 min. 2,131

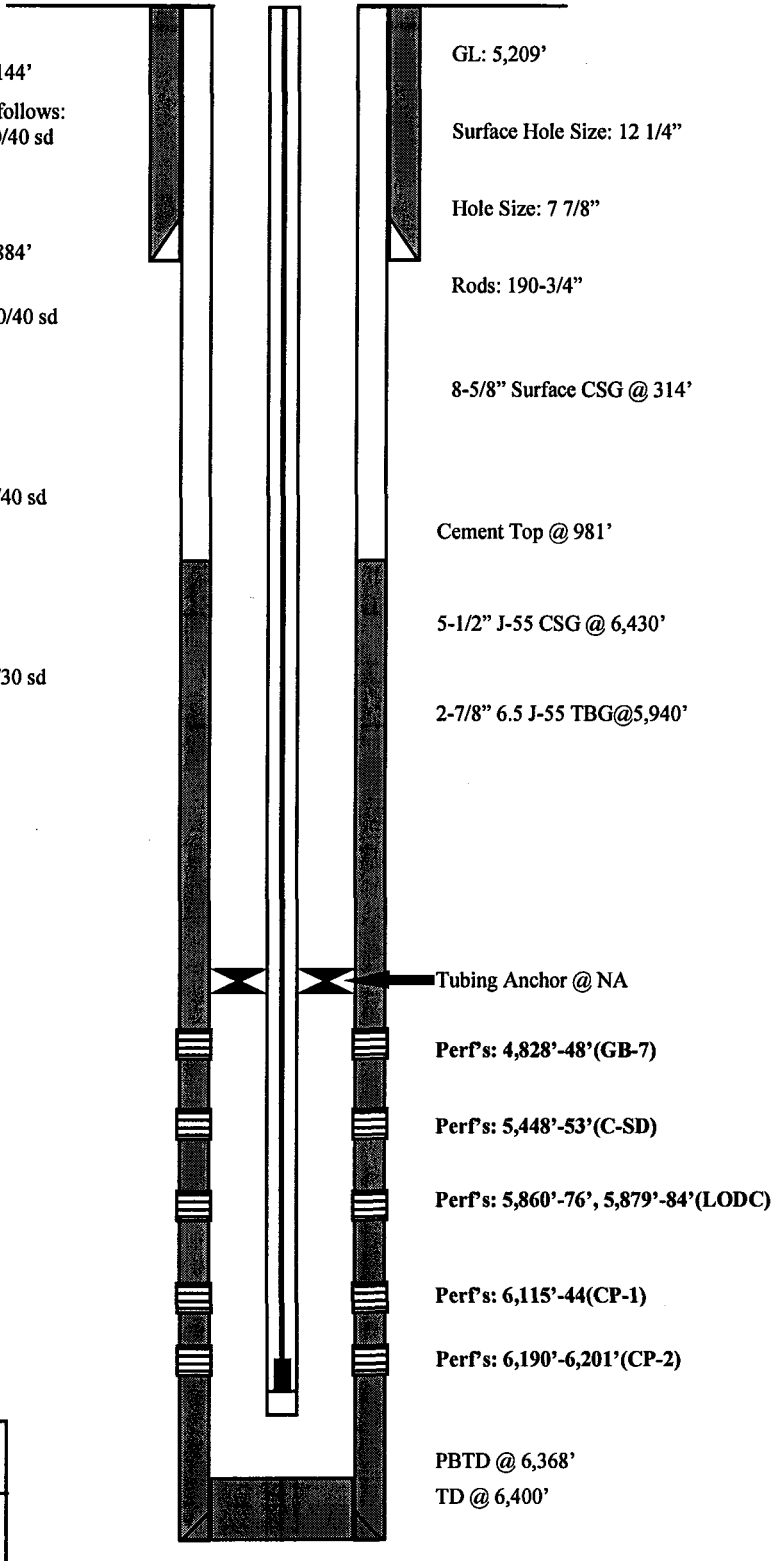

Inland Resources Inc.

Boundary Federal #9-21

1980 FSL 660 FEL

NESE Section 21-T8S-R17E

Duchesne Co, Utah

API #43-013-31542; Lease #U-50376

EXHIBIT E-7

Boundary Federal #10-21

Wellbore Diagram

Well History:

8-17-95	Spud Well
9-16-95	Perf: 6,210'-6,224', 6,090'-6,118'
9-20-95	Frac CP-1 and CP-3zones as follows: Totals 51,000 gal, 230,000# 20/40 sd Max TP 2,150 @ 37 BPM Avg TP 1,800 @ 36 BPM ISIP 1,931, after 5 min 1,832
9-21-95	Perf: 5,440'-5,457'
9-22-95	Frac C zone as follows: Totals 19,000 gal, 73,600# 20/40 sd Max TP 2,080 @ 34 BPM Avg TP 1,650 @ 33 BPM ISIP 1,678, after 5 min 1,635
9-23-95	Perf: 5,321'-5,327'
9-24-95	Frac D-2 zone as follows: Totals 14,312 gal, 55,000# 20/40 sd Max TP 2,696 @ 28 BPM Avg TP 2,100 @ 24 BPM ISIP 1,793, after 5 min. 1,787

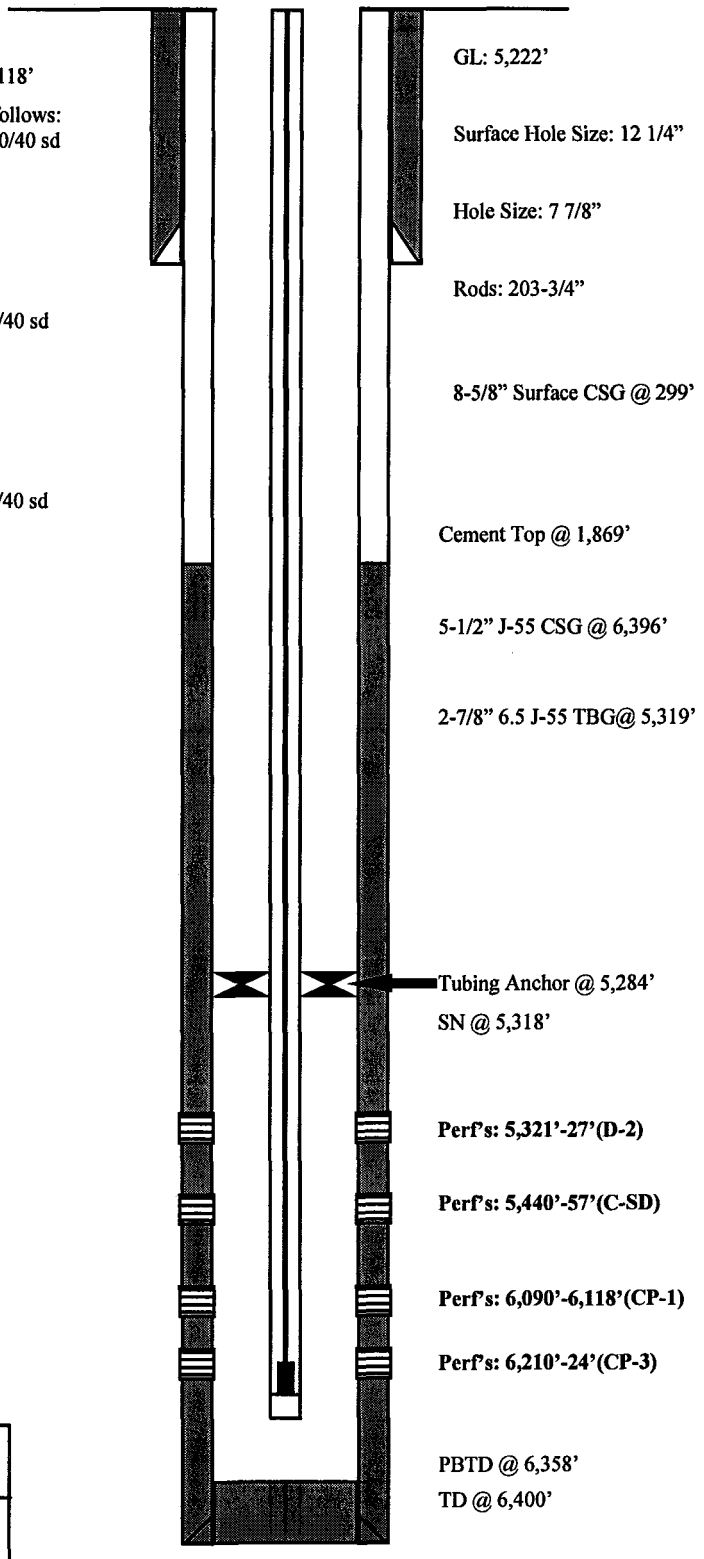

Inland Resources Inc.

Boundary Federal #10-21

1980 FEL 1983 FSL

NWSE Section 21-T8S-R17E

Duchesne Co, Utah

API #43-013-31532; Lease #U-50376

EXHIBIT E-8

Boundary Federal #11-21

Wellbore Diagram

Well History:

9-10-83	Spud Well
10-7-83	Perf: 5,417'-5,424', 5,427'-5,435' Frac C zone as follows: 1,400 gal 5% KCl water and clay stabilizer Max TP 6,700 @ 0 BPM Avg TP 3,000 @ 8.8 BPM
2-22-96	Perf: 4,796'-4,815'
2-23-96	Frac GB-4 zone as follows: Totals 23,576 gal fluid 78,200# 16/30 sd Avg TP 1900 @ 25.5 bpm ISIP 2200, after 5 min 2096
3-2-96	SQUEEZE Perfs 4,796'-4,815' w/ est. 15.8 bbls cement in perfs and est. 3.7 bbls in csg. Est cement top 4700' SDFN w/ 3000 psi on tbg & 500 on ann.

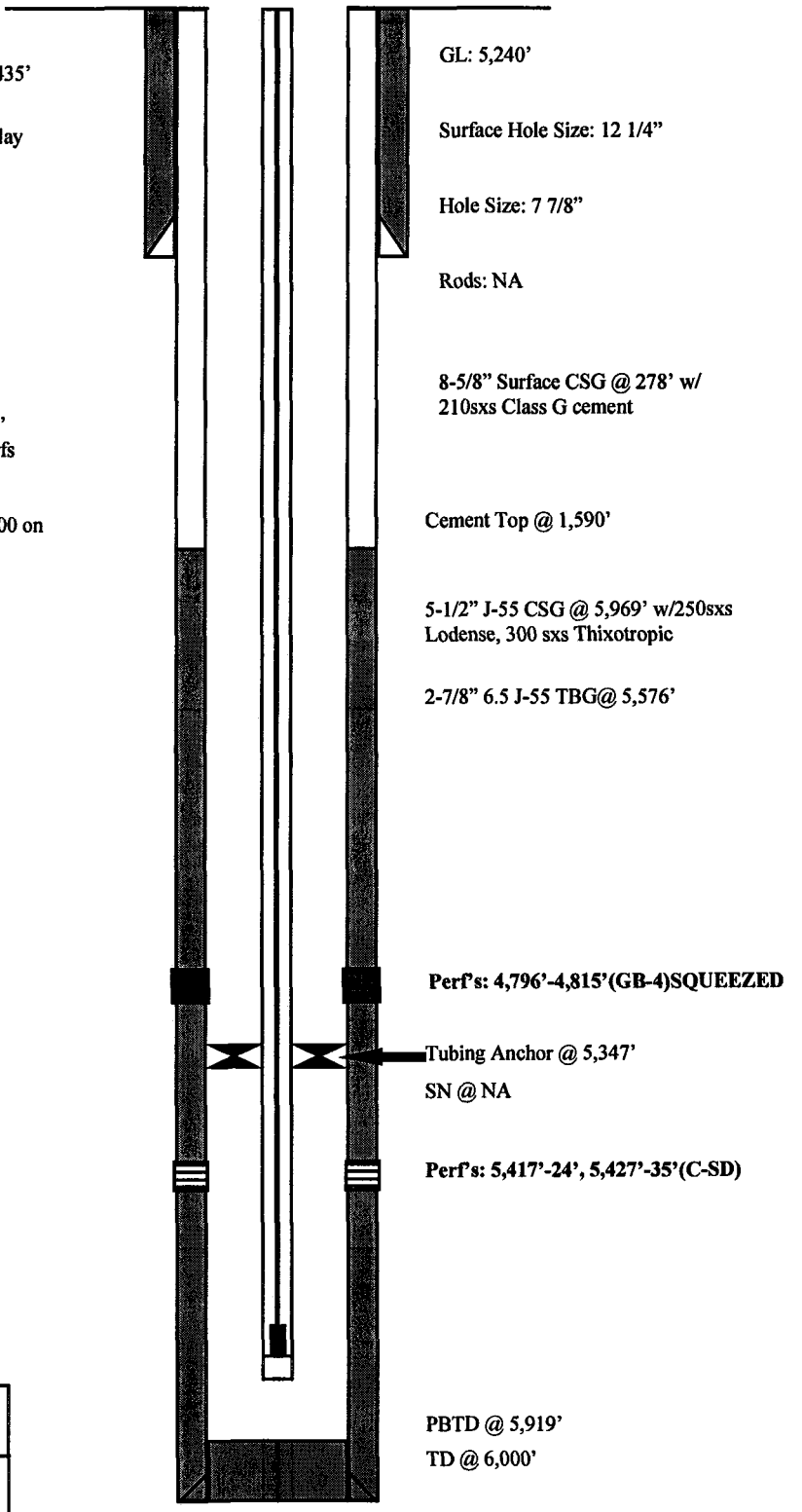

Inland Resources Inc.

Boundary Federal #11-21

1915 FSL 2076 FWL

NESW Section 21-T8S-R17E

Duchesne Co, Utah

API #43-013-30752; Lease #U-50376

EXHIBIT E-9

Boundary Federal #11-21

Injector
Wellbore Diagram

Well History:

9-10-83	Spud Well
10-7-83	Perf: 5,417'-5,424', 5,427'-5,435' Frac C zone as follows: 1,400 gal 5% KCl water and clay stabilizer Max TP 6,700 @ 0 BPM Avg TP 3,000 @ 8.8 BPM
2-22-96	Perf: 4,796'-4,815'
2-23-96	Frac GB-4 zone as follows: Totals 23,576 gal fluid 78,200# 16/30 sd Avg TP 1900 @ 25.5 bpm ISIP 2200, after 5 min 2096
3-2-96	SQUEEZE Perfs 4,796'-4,815' w/ est. 15.8 bbls cement in perfs and est. 3.7 bbls in csg. Est cement top 4700' SDFN w/ 3000 psi on tbg & 500 on ann.

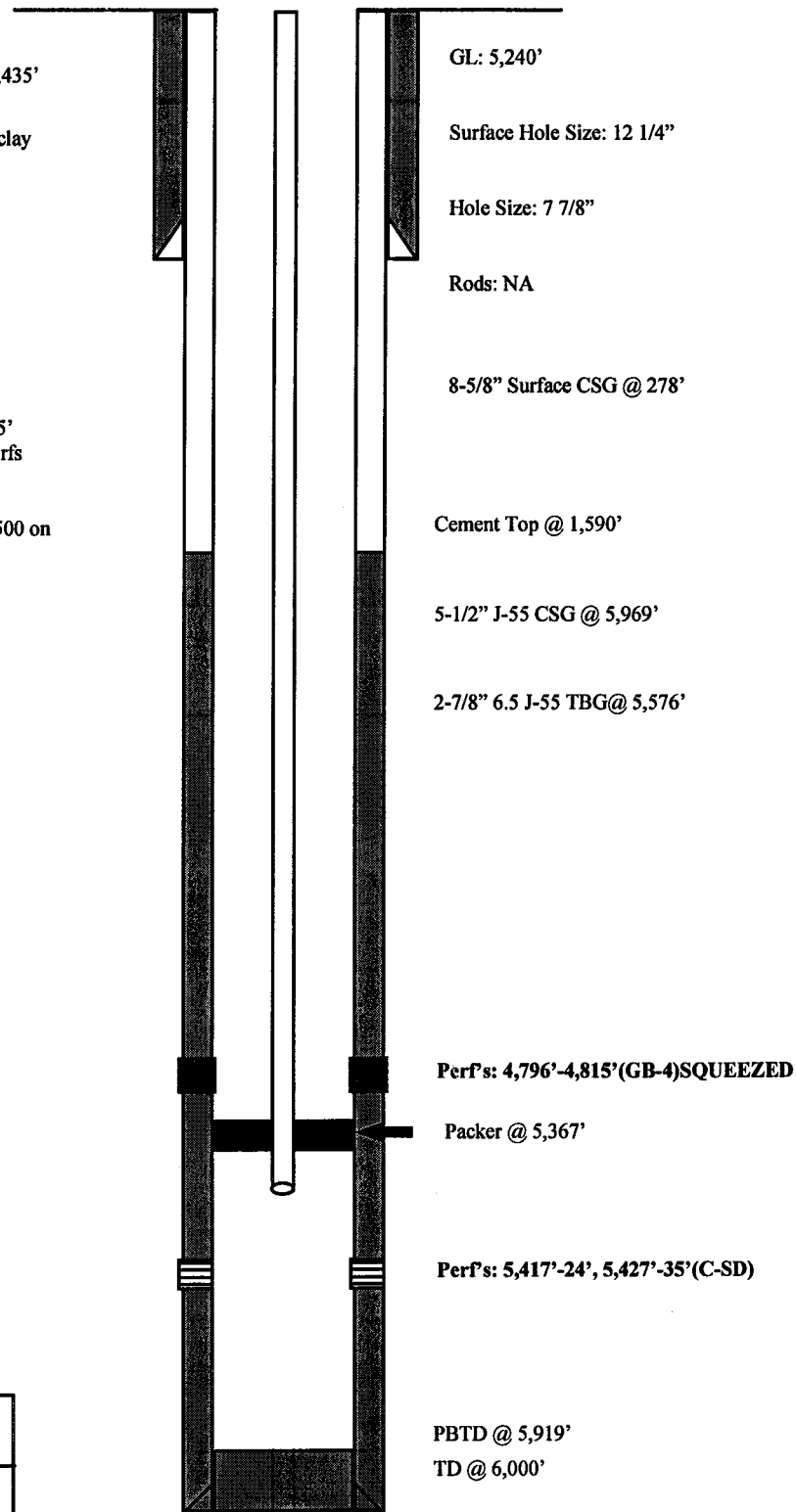

Inland Resources Inc.

Boundary Federal #11-21

1915 FSL 2076 FWL

NESW Section 21-T8S-R17E

Duchesne Co, Utah

API #43-013-30752; Lease #U-50376

EXHIBIT E-10

Boundary Federal #11-21

Plugged

Wellbore Diagram

Well History:

9-10-83	Spud Well
10-7-83	Perf: 5,417'-5,424', 5,427'-5,435' Frac C zone as follows: 1,400 gal 5% KCl water and clay stabilizer Max TP 6,700 @ 0 BPM Avg TP 3,000 @ 8.8 BPM
2-22-96	Perf: 4,796'-4,815'
2-23-96	Frac GB-4 zone as follows: Totals 23,576 gal fluid 78,200# 16/30 sd Avg TP 1900 @ 25.5 bpm ISIP 2200, after 5 min 2096
3-2-96	SQUEEZE Perfs 4,796'-4,815' w/ est. 15.8 bbls cement in perfs and est. 3.7 bbls in csg. Est cement top 4700' SDFN w/ 3000 psi on tbg & 500 on ann.

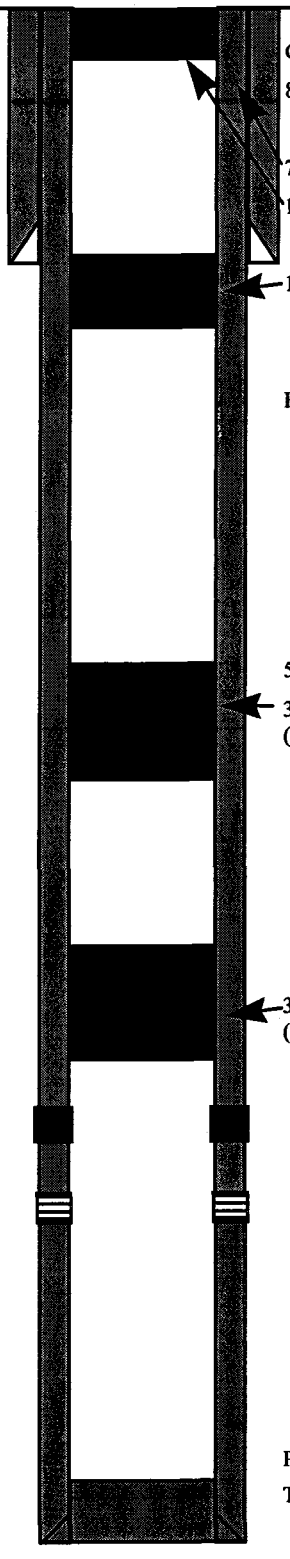

Inland Resources Inc.

Boundary Federal #11-21

1915 FSL 2076 FWL

NESW Section 21-T8S-R17E

Duchesne Co, Utah

API #43-013-30752; Lease #U-50376

EXHIBIT E-11

Boundary Federal #12-21

Wellbore Diagram

Well History:

11-10-94	Spud Well
12-21-94	Perf: 6,864'-6,874'
12-22-94	Frac Wasatch zone as follows: 1,000 gal 15% HCl acid ISIP 2,750, after 5 min 2,550
12-23-94	Perf: 6,550'-6,574
	Frac BGR zone as follows: 2,000 gal 15% HCl acid
12-28-94	Perf: 6,120'-6,134'
12-29-94	Frac CP-3 zone as follows: Totals 17,000 gal, 51,000# 20/40 sd Max TP 2,650 @ 31 BPM Avg TP 2,000 @ 31 BPM ISIP 2,050, after 5 min 2,000
1-6-95	Perf: 5,360'-5,372'
	Frac D-3 zone as follows: 2,00# 100 Mesh, 40,000# 20/40 sd Max TP 3,800 @ 8.2 BPM Avg TP 2,100 @ 27 BPM ISIP 1,850
1-13-95	Perf: 5,300'-5,310'
1-18-95	Frac D-2 zone as follows: Total 5,252 gal, 4,000# 100 mesh 60,000# 20/40 sd Max TP 2,870 @ 32.5 BPM AvgTP 2,400 @ 33.5 BPM ISIP 2,350, after 5 min 1,773

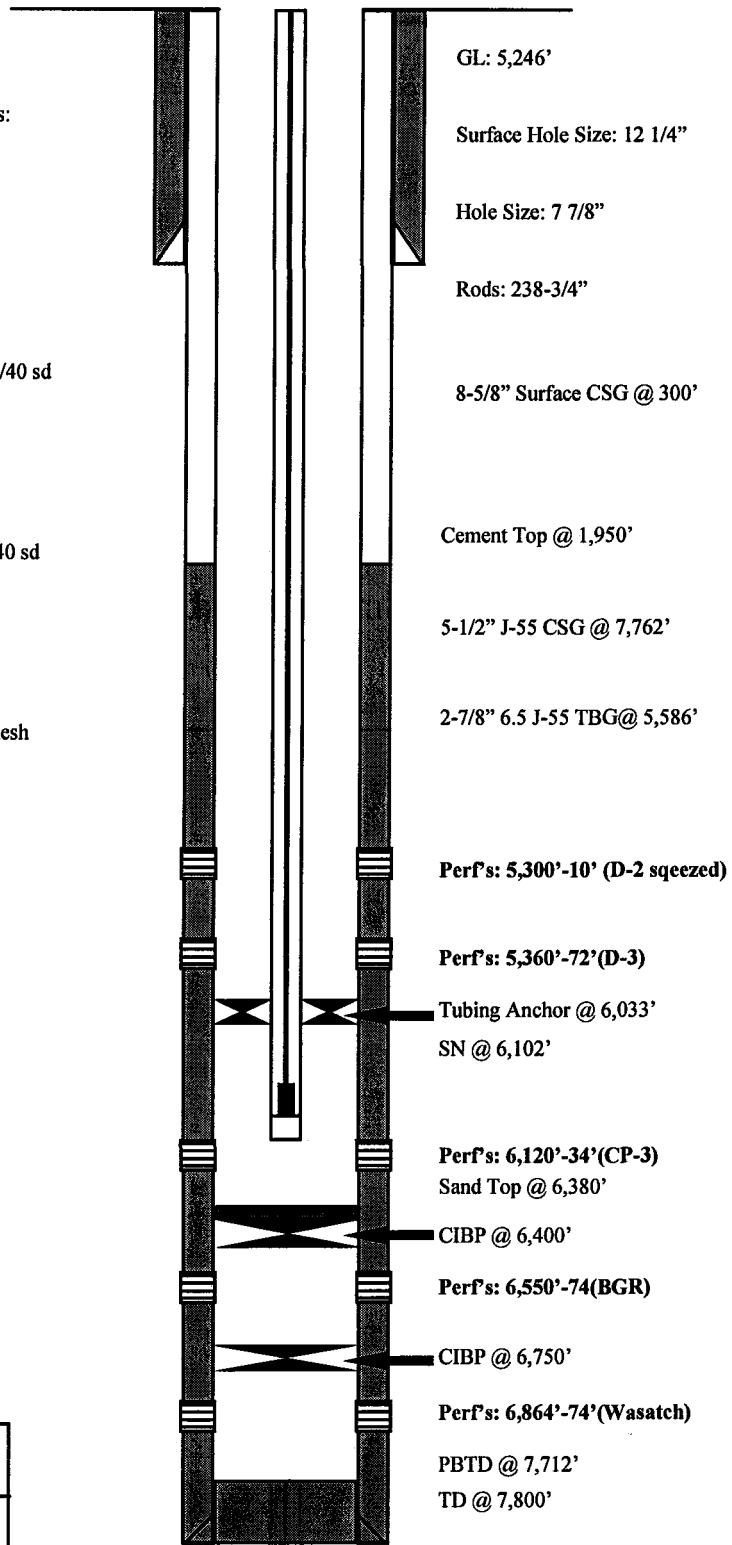

Inland Resources Inc.

Boundary Federal #12-21

1790 FWL 654 FWL

NWSW Section 21-T8S-R17E

Duchesne Co, Utah

API #43-013-31440; Lease #U-50376

EXHIBIT E-12

Boundary Federal #13-21

Wellbore Diagram

Well History:

6-30-82	Spud Well
7-17-82	Perf: 5,232'-5,240', 5,257'-5,260', 5,264'-5,274'
7-18-82	Frac D-1 and D-2 zones as follows: Totals 31.-,800 gal, 73,800# 20/40 sd Max TP 2,300 @ 30 BPM Avg TP 1,850 @ 30 BPM ISIP 1,650, after 5 min 1,540
1-96	Recompleted

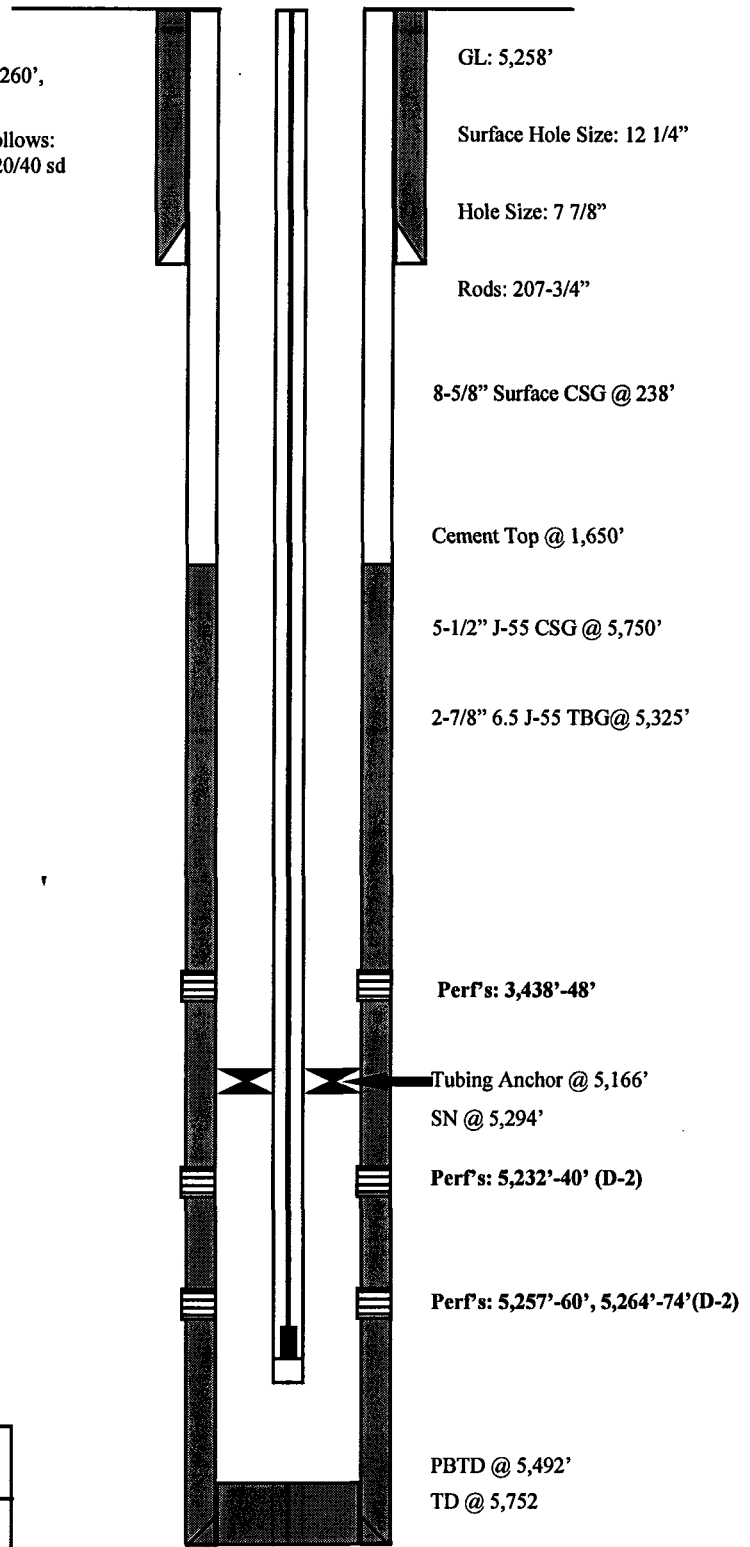

Inland Resources Inc.

Boundary Federal #13-21

515 FSL 517 FWL

SWSW Section 21-T8S-R17E

Duchesne Co, Utah

API #43-013-30665; Lease #U-50376

EXHIBIT E-13

Boundary Federal #14-21

Wellbore Diagram

Well History:

11-16-95	Spud Well
12-23-95	Perf: 6,101'-05', 6,107'-6,114' CP-1 4 spf
12-24-95	Frac CP-1 Sand as follows: Totals 498 bbls Boragel 56,600# 20/40 snd. Avg rate 20 BPM @ 1870 psi. ISIP 1873 psi, 5 min: 1708 psi, 10 min: 1583 psi.
12-27-95	Perf: 5,718'-40' LDC 4 spf
12-28-95	Frac LDC as follows: Totals 504 bbls Boragel 50,000# 20/40 sd. Avg rate 28 BPM @ 2000 psi. ISIP 2046 psi, 5 min: 1860 psi, 10 min: 1759 psi.
12-30-95	Perf: 5,389'-408' C Sand 4 spf Frac C sand as follows: Totals 404 bbls Boragel 53,000# 20/40 psi. Avg rate 25.6 BPM @ 1400 psi. ISIP 1579 psi, 5 min: 1500 psi., 10 min: 1447 psi.

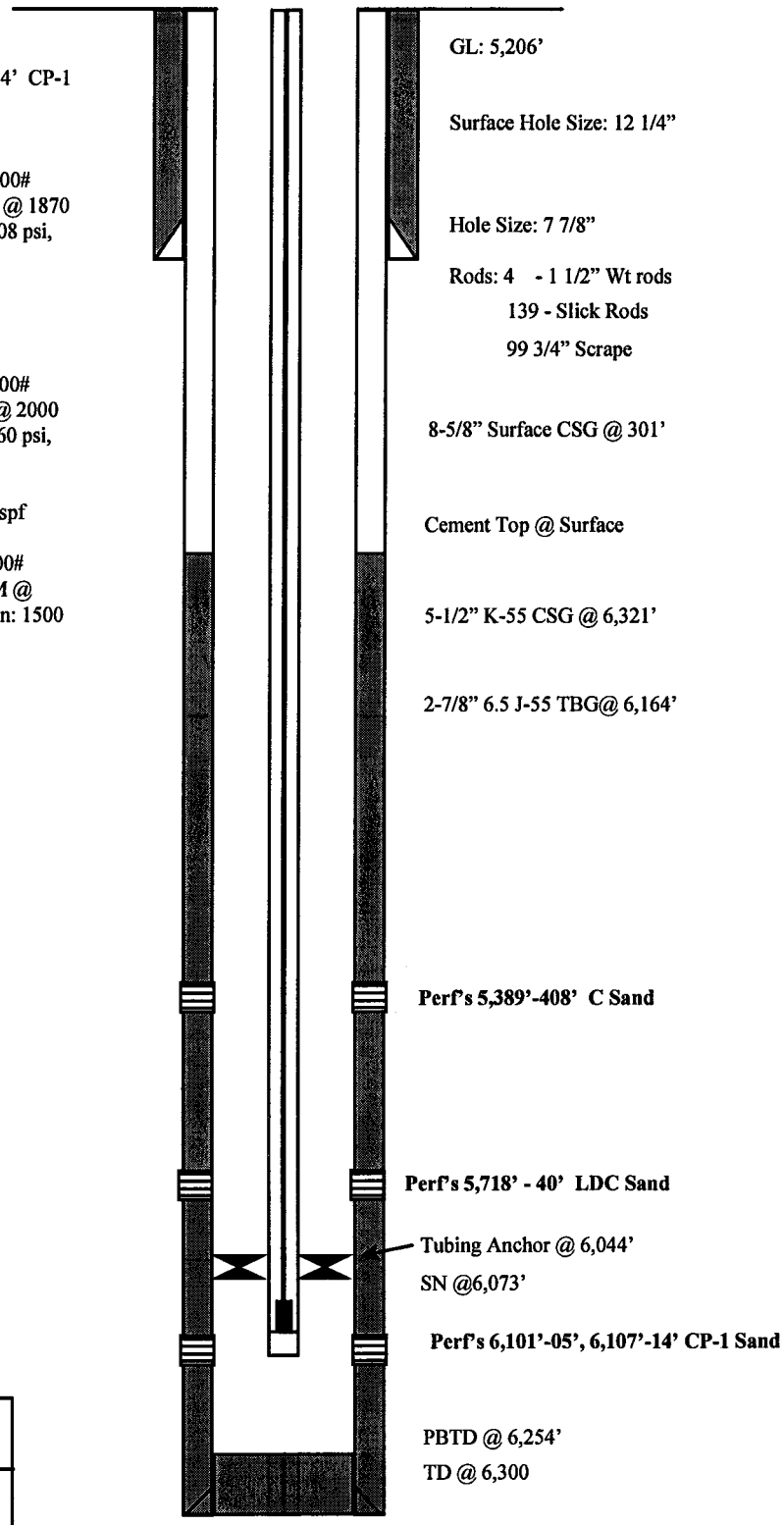

Inland Resources Inc.

Boundary Federal #14-21

660 FSL 1980 FWL

SESW Section 21-T8S-R17E

Duchesne Co, Utah

API #43-013-31441; Lease #U-50376

Inland
RESOURCES INC.

April 4, 1996

RECEIVED
APR - 5 1996
DIV OF OIL, GAS & MINING

State of Utah
Division of Oil, Gas & Mining
355 West North Temple
Three Triad Center Suite 350
Salt Lake City Utah 84180-1203

ATTENTION: Dan Jarvis

RE: Boundary Federal #11-21

Dear Mr. Jarvis

Enclosed is the Halliburton job log of the G-B sand we recently fraced in the Boundary Federal #11-21 well. The frac gradient is .90, the frac gradient we listed in the injection application is consistent with the surrounding wells.

As stated in the injection application, a step rate test will be conducted periodically to ensure we are below parting pressure.

Please contact me on my cellular telephone (801) 823-6205, if you have any additional questions.

Sincerely,
Brad Mecham by C. Cameron
Brad Mecham
Operations Manager

/cc
Enclosures

Inland Production Company Field Office • P.O. Box 1446 • Roosevelt, UT 84066 • 801-722-5103 • FAX 801-722-9149
475 Seventeenth Street, Suite 1500, Denver, CO 80202 • 303-292-0900 • FAX 303-296-4070

HALLIBURTON

ENERGY SERVICES

JOB LOG

Well No. 11-21 Lease BOUNDRY FEDERAL Job Id 002850100380

Customer INLAND PRODUCTION COMPANY Date 02-22-96

Job Type Frac Jobs Operator BUD HARRISON

S/E NO.	TIME	RATE BPM	VOLUME GAL	PUMPS T C	PRESSURE (PSI) TUBING	CASING	DESCRIPTION OF OPERATION AND MATERIALS
	12:30						FROM LOC TO LOC
	13:00						ON LOC
	14:11						SAFTEY MEETING
	14:14					3500	PRIME /TEST
	14:26	23.70					ST PAD
	14:30	1.50	4360.00			2840	BREAK DOWN
	14:32	25.40	4890.00			2359	PAD ON
	14:32	25.00	5000.00			2340	ST 2-4# 16/30
	14:35	25.50	8000.00			2087	ST 4-8# 16/30
	14:36	25.50	9890.00			1930	2# ON
	14:40	25.40	13000.00			1877	4# ON
	14:44	25.50	15000.00			1814	ST 8# 16/30
	14:50	26.80	19002.00			1718	ST FLUSH
	14:50	26.80	19600.00			1780	8# ON
	14:55	23.00	23576.00			2400	SHUT DOWN END JOB
	14:55					2200	ISIP
	15:00					2096	5 MIN
	15:05					2081	10 MIN
							AVE RATE 25.5
							AVE PRES 1900
							MAX RATE 26.9
							MAX PRES 2840
							FG .90
							TOTAL SAND 78200# 16/30
							THANK YOU BUD &CREW

RECEIVED
APR - 5 1996
DIV. OF OIL, GAS & MINING

Form 3160-5
(June 1990)

UNITED STATES
DEPARTMENT OF THE INTERIOR
BUREAU OF LAND MANAGEMENT

Budget Bureau No. 1004-[illegible]
Expires: March 31, 1993

5. Lease Designation and Serial No.
U-50376

6. If Indian, Allottee or Tribe Name

SUNDRY NOTICES AND REPORTS ON WELLS

Do not use this form for proposals to drill or to deepen or reentry to a different reservoir.
Use "APPLICATION FOR PERMIT—" for such proposals

SUBMIT IN TRIPLICATE

7. If Unit or CA, Agreement Designation

1. Type of Well
[X] Oil Well [ ] Gas Well [ ] Other

8. Well Name and No.
Boundary Federal #11-21

2. Name of Operator
Inland Production Company

9. API Well No.
43-013-30752

3. Address and Telephone No.
P.O. Box 1446 Roosevelt, UT 84066 (801) 722-5103

10. Field and Pool, or Exploratory Area

4. Location of Well (Footage, Sec., T., R., M., or Survey Description)
NE/SW
Sec. 21, T8S, R17E

11. County or Parish, State
Duchesne County, UT

12. CHECK APPROPRIATE BOX(s) TO INDICATE NATURE OF NOTICE, REPORT, OR OTHER DATA

TYPE OF SUBMISSION	TYPE OF ACTION	
[ ] Notice of Intent	[ ] Abandonment	[ ] Change of Plans
[X] Subsequent Report	[ ] Recompletion	[ ] New Construction
[ ] Final Abandonment Notice	[ ] Plugging Back	[ ] Non-Routine Fracturing
	[ ] Casing Repair	[ ] Water Shut-Off
	[ ] Altering Casing	[ ] Conversion to Injection
	[X] Other Weekly Status	[ ] Dispose Water
		(Note: Report results of multiple completion on Well Completion or Recompletion Report and Log form.)

13. Describe Proposed or Completed Operations (Clearly state all pertinent details, and give pertinent dates, including estimated date of starting any proposed work. If well is directionally drilled, give subsurface locations and measured and true vertical depths for all markers and zones pertinent to this work.)*

Weekly Status Report for week of 2/21/96 - 3/6/96

2/21/96: Perf G-B sd @ 4796'-4815' w/ 4 JSPF
Frac w/ 78,200# 16/30 sd in 23,576 gal fluid

3/1/96: Mixed 100 sx prem + w/ 2% CFR-3 Halad & 3% CaCl 2. Mixed @ 16.2 PPG (1.10 cu ft/sk) Total 19.5 bbls cmt slurry. Displaced W/ FW total of 31.25 BWS. Staged in Final 2 bbls & press final squeeze to 3000 psi and squeezed off perfs from 4796'-4815' w/ est 15.8 bbls cmt in perfs & est 3.7 bbls cmt in csg. Est cmt top @4700'±.

3/5/96: TIH w/ NC, 5 jts tbg, SN, 2 jts tbg, AC, 164 jts w/ EOT @ 5576', SN @ 5412', AC @ 5347'.

3/6/96: TIH w/ 2 - 1/2" X 1 1/2" X 12' X 16' RHAC pump, 4 wt rods, 210 - 3/4" slick, 1 - 8', 1 - 6', 1 - 4' X 3/4" ponys. TOOH w/ polished rod. Seat pump

ON PRODUCTION 3/6/96

14. I hereby certify that the foregoing is true and correct
Signed Cheryl Cameron Cheryl Cameron Title Regulatory Compliance Specialist Date 3/7/96

(This space for Federal or State office use)

Approved by _____ Title _____ Date _____
Conditions of approval, if any:

Title 18 U.S.C. Section 1001, makes it a crime for any person knowingly and willfully to make to any department or agency of the United States any false, fictitious or fraudulent statements or representations as to any matter within its jurisdiction.

*See Instruction on Reverse Side

Inland
PRODUCTION COMPANY
A Subsidiary of Inland Resources Inc.

April 19, 2000

Division Oil and Gas & Mining
Attn: Mr. Brad Hill
1594 West North Temple – Suite 1210
P. O. Box 145801
Salt Lake City, Utah 84114-5801

RE: Boundary Federak 11-21-8-17
API # 43-013-30752, U-50376

Dear Mr. Brad Hill

Please find enclosed the results of a MIT test conducted today on the above referenced well. On 4-19-00 there was 1070 psi put on casing with 1475 psi on tubing there was no loss of pressure charted in a ½ hour test. MR. Bahram Jafari and Mr Nathan Wiser with the EPA witnessed the test. The pressure was then released. This was a 5 year scheduled test.

If you have any questions or need further information, please don't hesitate to contact me. I can be reached at our Pleasant Valley Office at (435) 646-3721 or on my cellular at (435) 823-7977.

Sincerely,

Ron Shuck

Ron Shuck
Production Foreman

Enclosures

cc: State of Utah – Division of Oil, Gas & Mining
Jon Holst - Inland Resources
Roosevelt & Denver Well Files

/rs

RECEIVED
APR 24 2000
DIVISION OF
OIL, GAS AND MINING

Inland Production Company Field Office • Route 3, Box 3630 • Myton, UT 84052 • 435-646-3721 • FAX 435-646-3031
Corporate Office • 410 Seventeenth Street, Suite 700 • Denver, CO 80202 • 303-893-0102 • FAX 303-893-0103

Inland

April 4, 1996

State of Utah
Division of Oil, Gas & Mining
355 West North Temple
Three Triad Center Suite 350
Salt Lake City Utah 84180-1203

ATTENTION: Dan Jarvis

RE: Boundary Federal #11-21

Dear Mr. Jarvis

Enclosed is the Halliburton job log of the G-B sand we recently fraced in the Boundary Federal #11-21 well. The frac gradient is .90, the frac gradient we listed in the injection application is consistent with the surrounding wells.

As stated in the injection application, a step rate test will be conducted periodically to ensure we are below parting pressure.

Please contact me on my cellular telephone (801) 823-6205, if you have any additional questions.

Sincerely,
Brad Mecham by C Timson
Brad Mecham
Operations Manager

/cc
Enclosures

Inland Production Company Field Office • P.O. Box 1446 • Roosevelt, UT 84066 • 801-722-5103 • FAX 801-722-9149
475 Seventeenth Street, Suite 1500, Denver, CO 80202 • 303-292-0900 • FAX 303-296-4070

HALLIBURTON

ENERGY SERVICES

JOB LOG

Well No. 11-21 Lease BOUNDRY FEDERAL Job Id 0020501003B0

Customer INLAND PRODUCTION COMPANY Date 02-22-96

Job Type Frac Jobs Operator BUD HARRISON

S/E NO.	TIME	RATE BPM	VOLUME GAL	PUMPS T	PUMPS C	PRESSURE (PSI) TUBING	PRESSURE (PSI) CASING	DESCRIPTION OF OPERATION AND MATERIALS
	12:30							FROM LOC TO LOC
	13:00							ON LOC
	14:11							SAFTEY MEETING
	14:14						3500	PRIME /TEST
	14:26	23.70						ST PAD
	14:30	1.50	4360.00				2840	BREAK DOWN
	14:32	25.40	4890.00				2359	PAD ON
	14:32	25.00	5000.00				2340	ST 2-4# 16/30
	14:35	25.50	8000.00				2087	ST 4-8# 16/30
	14:36	25.50	9890.00				1930	2# ON
	14:40	25.40	13000.00				1877	4# ON
	14:44	25.50	15000.00				1814	ST 8# 16/30
	14:50	26.80	19002.00				1718	ST FLUSH
	14:50	26.80	19600.00				1780	8# ON
	14:55	23.00	23576.00				2400	SHUT DOWN END JOB
	14:55						2200	ISIP
	15:00						2096	5 MIN
	15:05						2081	10 MIN
								AVE RATE 25.5
								AVE PRES 1900
								MAX RATE 26.9
								MAX PRES 2840
								FG .90
								TOTAL SAND 78200# 16/30
								THANK YOU BUD &CREW

BEFORE THE DIVISION OF OIL, GAS AND MINING
DEPARTMENT OF NATURAL RESOURCES
STATE OF UTAH

---ooOoo---

IN THE MATTER OF THE APPLICATION OF INLAND PRODUCTION CO. FOR ADMINISTRATIVE APPROVAL OF THE BOUNDARY FEDERAL 11-21 WELL LOCATED IN SECTION 21, TOWNSHIP 8 SOUTH, RANGE 17 EAST, S.L.M., DUCHESNE COUNTY, UTAH, AS A CLASS II INJECTION WELL	:	NOTICE OF AGENCY ACTION CAUSE NO. UIC-171

---ooOoo---

THE STATE OF UTAH TO ALL PERSONS INTERESTED IN THE ABOVE ENTITLED MATTER.

Notice is hereby given that the Division of Oil, Gas and Mining (the "Division") is commencing an informal adjudicative proceeding to consider the application of Inland Production Company for administrative approval of the Boundary Federal 11-21 well, located in Section 21, Township 8 South, Range 17 East, S.L.M, Duchesne County, Utah, for conversion to a Class II injection well. The proceeding will be conducted in accordance with Utah Admin. R.649-10, Administrative Procedures.

The interval from 4000 feet to 6000 feet (Green River Formation) will be selectively perforated for water injection. The maximum requested injection pressure will be limited to 2000 PSIG with a maximum rate of 1000 BWPD.

Any person desiring to object to the application or otherwise intervene in the proceeding, must file a written protest or notice of intervention with the Division within fifteen days following publication of this notice. If such a protest or notice of intervention is received, a hearing will be scheduled before the Board of Oil, Gas and Mining. Protestants and/or intervenors should be prepared to demonstrate at the hearing how this matter affects their interests.

Dated this 15th day of April 1996.

STATE OF UTAH
DIVISION OF OIL, GAS & MINING

R. J. Firth
Associate Director, Oil & Gas

Inland Production Company
Boundary Federal 11-21
Cause No. UIC-171

Publication Notices were sent to the following:

Newspaper Agency Corporation
Legal Advertising
Tribune Building, Front Counter
143 South Main
Salt Lake City, Utah 84111

Uintah Basin Standard
268 South 200 East
Roosevelt, Utah 84066

Bureau of Land Management
170 South 500 East
Vernal, Utah 84078

Inland Production Company
P. O. Box 1446
Roosevelt, Utah 84066

U.S. Environmental Protection Agency
Region VIII
Attn. Kerrigan G. Clough
999 18th Street
Denver, Colorado 80202-2466

Larraine Platt

Larraine Platt
Secretary
March 20, 1996

Michael O. Leavitt
Governor
Ted Stewart
Executive Director
James W. Carter
Division Director

State of Utah

DEPARTMENT OF NATURAL RESOURCES
DIVISION OF OIL, GAS AND MINING

355 West North Temple
3 Triad Center, Suite 350
Salt Lake City, Utah 84180-1203
801-538-5340
801-359-3940 (Fax)
801-538-5319 (TDD)

April 15, 1996

Newspaper Agency Corporation
Legal Advertising
Tribune Building, Front Counter
143 South Main
Salt Lake City, Utah 84111

Re: Notice of Agency Action - Cause No. UIC-171

Gentlemen:

Enclosed is a copy of the referenced Notice of Agency Action. Please publish the Notice, once only, as soon as possible. Please send proof of publication and billing to the Division of Oil, Gas and Mining, 355 West North Temple, 3 Triad Center, Suite 350, Salt Lake City, Utah 84180-1203.

Sincerely,

Larraine Platt

Larraine Platt
Secretary

Enclosure

Michael O. Leavitt
Governor

Ted Stewart
Executive Director

James W. Carter
Division Director

State of Utah

DEPARTMENT OF NATURAL RESOURCES
DIVISION OF OIL, GAS AND MINING

355 West North Temple
3 Triad Center, Suite 350
Salt Lake City, Utah 84180-1203
801-538-5340
801-359-3940 (Fax)
801-538-5319 (TDD)

April 15, 1996

Uintah Basin Standard
268 South 200 East
Roosevelt, Utah 84066

Re: Notice of Agency Action - Cause No. UIC-171

Gentlemen:

Enclosed is a copy of the referenced Notice of Agency Action. Please publish the Notice, once only, as soon as possible. Please send proof of publication and billing to the Division of Oil, Gas and Mining, 355 West North Temple, 3 Triad Center, Suite 350, Salt Lake City, Utah 84180-1203.

Sincerely,

Larraine Platt

Larraine Platt
Secretary

Enclosure

143 SOUTH MAIN ST.
P.O. BOX 45838
SALT LAKE CITY, UTAH 84145
FED. TAX I.D. # 87-0217663

Newspaper Agency Corporation
The Salt Lake Tribune DESERET NEWS

CUSTOMER'S COPY

PROOF OF PUBLICATION

CUSTOMER NAME AND ADDRESS	ACCOUNT NUMBER	
DIV OF OIL, GAS & MINING 355 WEST NORTH TEMPLE 3 TRIAD CENTER #350 SLC, UT 84180	D5385340L-07	04/23/96

ACCOUNT NAME	
DIV OF OIL, GAS & MINING	
TELEPHONE	INVOICE NUMBER
801-538-5340	TL4J8201061
SCHEDULE	
START 04/23/96 END 04/23/96	
CUST. REF. NO.	
UIC-171	
CAPTION	
NOTICE OF AGENCY ACTIONCAUSE N	
SIZE	
74 LINES 1.00 COLUMN	
TIMES	RATE
1	1.64
MISC. CHARGES	AD CHARGES
.00	121.36
	TOTAL COST
	121.36

NOTICE OF AGENCY ACTION
CAUSE NO. UIC-171
BEFORE THE DIVISION OF OIL, GAS AND MINING
DEPARTMENT OF NATURAL RESOURCES, STATE OF UTAH

IN THE MATTER OF THE APPLICATION OF INLAND PRODUCTION CO. FOR ADMINISTRATIVE APPROVAL OF THE BOUNDARY FEDERAL 11-21 WELL LOCATED IN SECTION 21, TOWNSHIP 8 SOUTH, RANGE 17 EAST, S.L.M., DUCHESNE COUNTY, UTAH, AS A CLASS II INJECTION WELL.

THE STATE OF UTAH TO ALL PERSONS INTERESTED IN THE ABOVE ENTITLED MATTER.

Notice is hereby given that the Division of Oil, Gas and Mining (the "Division") is commencing an informal adjudicative proceeding to consider the application of Inland Production Company for administrative approval of the Boundary Federal 11-21 well, located in Section 21, Township 8 South, Range 17 East, S.L.M, Duchesne County, Utah, for conversion to a Class II injection well. The proceeding will be conducted in accordance with Utah Admin. R.649-10, Administrative Procedures.

The interval from 4000 feet to 6000 feet (Green River Formation) will be selectively perforated for water injection. The maximum requested injection pressure will be limited to 2000 PSIG with a maximum rate of 1000 BWPD.

Any person desiring to object to the application or otherwise intervene in the proceeding, must file a written protest or notice of intervention with the Division within fifteen days following publication of this notice. If such a protest or notice of intervention is received, a hearing will be scheduled before the Board of Oil, Gas and Mining. Protestants and/or intervenors should be prepared to demonstrate at the hearing how this matter affects their interests.

DATED this 15th day of April, 1996.

STATE OF UTAH
DIVISION OF OIL, GAS AND MINING
/s/ R. J. Firth
Associate Director
Oil and Gas
4J820100

COPY

AFFIDAVIT OF PUBLICATION

NEWSPAPER AGENCY CORPORATION LEGAL BOOKKEEPER, I CERTIFY THAT THE ATTACHED
ERTISEMENT OF NOTICE OF AGENCY ACTIONCAUSE N FOR
DIV OF OIL, GAS & MINING WAS PUBLISHED BY THE NEWSPAPER AGENCY
ORATION, AGENT FOR THE SALT LAKE TRIBUNE AND DESERET NEWS, DAILY NEWSPAPERS
ITED IN THE ENGLISH LANGUAGE WITH GENERAL CIRCULATION IN UTAH, AND PUBLISHED
SALT LAKE CITY, SALT LAKE COUNTY IN THE STATE OF UTAH.

LISHED ON START 04/23/96 END 04/23/96

IATURE Joanne Mooney

04/23/96

NOTARY PUBLIC
JOANNE MOONEY
2626 Hartford St.
Salt Lake City, UT 84106
My Commission Expires
March 31, 2000
STATE OF UTAH

THIS IS NOT A STATEMENT BUT A "PROOF OF PUBLICATION"
PLEASE PAY FROM BILLING STATEMENT.

file copy

State of Utah
DEPARTMENT OF NATURAL RESOURCES
DIVISION OF OIL, GAS AND MINING

Michael O. Leavitt
Governor

Ted Stewart
Executive Director

James W. Carter
Division Director

355 West North Temple
3 Triad Center, Suite 350
Salt Lake City, Utah 84180-1203
801-538-5340
801-359-3940 (Fax)
801-538-5319 (TDD)

May 28, 1996

Inland Production Company
P. O. Box 1446
Roosevelt, Utah 84066

Re: Boundary Federal 11-21 well, Section 21, Township 8 South, Range 17 East, Duchesne County, Utah

Gentlemen:

Pursuant to Utah Admin. Code R649-5-3-3, the Division of Oil, Gas and Mining (the "Division") issues its administrative approval for conversion of the referenced well to a Class II injection well. Accordingly, the following stipulations shall apply for full compliance with this approval:

1. Compliance with all applicable requirements for the operation, maintenance and reporting for Underground Injection Control ("UIC") Class II injection wells pursuant to Utah Admin. Code R649-1 et seq.

2. Conformance with all conditions and requirements of the complete application submitted by Inland Production Company.

If you have any questions regarding this approval or the necessary requirements, please contact Dan Jarvis at this office.

Sincerely,

R.J. Firth
Associate Director

cc: Dan Jackson, Environmental Protection Agency
Bureau of Land Management, Vernal

State of Utah
DEPARTMENT OF NATURAL RESOURCES
DIVISION OF OIL, GAS AND MINING

Michael O. Leavitt
Governor

Ted Stewart
Executive Director

James W. Carter
Division Director

355 West North Temple
3 Triad Center, Suite 350
Salt Lake City, Utah 84180-1203
801-538-5340
801-359-3940 (Fax)
801-538-5319 (TDD)

UNDERGROUND INJECTION CONTROL PERMIT

Cause No. UIC-171

Operator: Inland Production Company

Well: Boundary Federal 11-21

Location: Section 21, Township 8 South, Range 17 East, Duchesne County

API No.: 43-013-30752

Well Type: Enhanced Recovery (waterflood)

Stipulations of Permit Approval

1. Approval for conversion to injection well issued on May 28, 1996.
2. Maximum Allowable Injection Pressure: 2000 psig.
3. Maximum Allowable Injection Rate: limited by pressure..
4. Injection Interval: 4000 feet to 6000 feet (Green River Formation)

Approved by: R.J. Firth
Associate Director, Oil and Gas

5/28/96
Date

Inland
RESOURCES INC.

June 12, 1996

Bureau of Land Management
Vernal District Office
170 South 500 East
Vernal, Utah 84078

ATTENTION: Wayne Bankert

Re: *Monument Butte Federal #13-25*
SW/SW Sec. 25, T8S, R16E

Monument Butte Federal #15-25
SW/SE Sec. 25, T8S, R16E

Monument Butte Federal #1A-35
NE/NE Sec. 35, T8S, R16E

Boundary Federal #11-21
NE/SW Sec. 21, T8S, R17E

Dear Wayne,

Enclosed are the original and two copies (each) of the Casing and Integrity Test results and a copy of the charts, on the above referenced wells. Copies will also be submitted to the State of Utah

If additional information is needed, please contact Cheryl at (801)722-5103, in the Roosevelt office.

Sincerely,

Cori Brown
Secretary

cc: *Attn: Frank Matthews*
State of Utah
Division of Oil, Gas & Mining
P.O. Box 145801
Salt Lake City, Utah 84114-5801

RECEIVED
JUN 13 1996
DIV. OF OIL, GAS & MINING

/cb
Enclosures

Inland Production Company Field Office • P.O. Box 1446 • Roosevelt, UT 84066 • 801-722-5103 • FAX 801-722-9149

475 Seventeenth Street, Suite 1500, Denver, CO 80202 • 303-292-0900 • FAX 303-296-4070

INLAND PRODUCTION COMPANY

BOUNDARY FEDERAL #11-21
NE/SW SEC. 21,T8S, R17E
DUCHESNE COUNTY, UTAH

CASING & INTEGRITY TEST

0 MIN	*1000 PSIG*
10 MIN	*1000 PSIG*
20 MIN	*1000 PSIG*
30 MIN	*1000 PSIG*
40 MIN	*1000 PSIG*
50 MIN	*1000 PSIG*
60 MIN	*1000 PSIG*

TUBING PRESSURE 0 PSI

TEST CONDUCTED BY JODY LIDDELL/INLAND PRODUCTION COMPANY

RECEIVED
JUN 1 3 1996
DIV. OF OIL, GAS & MINING

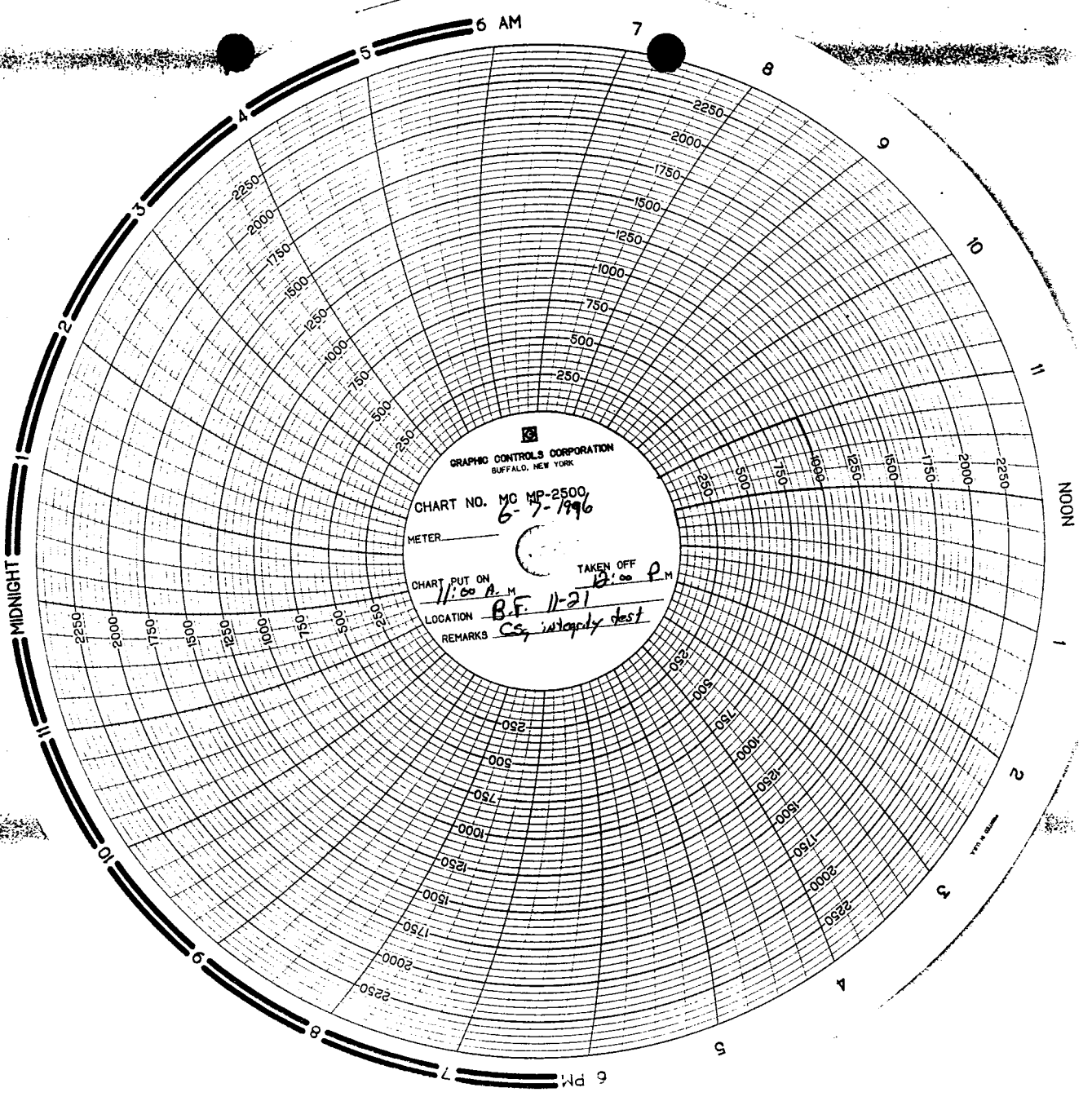

RECEIVED
JUN 13 1996
DIV. OF OIL, GAS & MINING

Form 3160-5
(June 1990)

UNITED STATES
DEPARTMENT OF THE INTERIOR
BUREAU OF LAND MANAGEMENT

FORM APPROVED
Budget Bureau No. 1004-0135
Expires: March 31, 1993

SUNDRY NOTICES AND REPORTS ON WELLS

Do not use this form for proposals to drill or to deepen or reentry to a different reservoir.
Use "APPLICATION FOR PERMIT—" for such proposals

SUBMIT IN TRIPLICATE

5. Lease Designation and Serial No.: U-50376
6. If Indian, Allottee or Tribe Name:
7. If Unit or CA, Agreement Designation:

1. Type of Well: [X] Oil Well [ ] Gas Well [ ] Other
2. Name of Operator: Inland Production Company
3. Address and Telephone No.: P.O. Box 1446 Roosevelt, Utah 84066 (801)722-5103
4. Location of Well (Footage, Sec., T., R., M., or Survey Description): NE/SW 1915' FSL & 2076' FWL Sec. 21, T8S, R17E
8. Well Name and No.: Boundary Federal #11-21
9. API Well No.: 43-013-30752
10. Field and Pool, or Exploratory Area: Boundary
11. County or Parish, State: Duchesne County, Utah

12. CHECK APPROPRIATE BOX(s) TO INDICATE NATURE OF NOTICE, REPORT, OR OTHER DATA

TYPE OF SUBMISSION	TYPE OF ACTION	
[X] Notice of Intent	[ ] Abandonment	[ ] Change of Plans
[ ] Subsequent Report	[ ] Recompletion	[ ] New Construction
[ ] Final Abandonment Notice	[ ] Plugging Back	[ ] Non-Routine Fracturing
	[ ] Casing Repair	[ ] Water Shut-Off
	[ ] Altering Casing	[ ] Conversion to Injection
	[X] Other Conversion	[ ] Dispose Water (Note: Report results of multiple completion on Well Completion or Recompletion Report and Log form.)

13. Describe Proposed or Completed Operations (Clearly state all pertinent details, and give pertinent dates, including estimated date of starting any proposed work. If well is directionally drilled, give subsurface locations and measured and true vertical depths for all markers and zones pertinent to this work.)*

Inland Production Company requests approval to convert the Boundary Federal #11-21 from a producing well to an injection well.

Accepted by the Utah Division of Oil, Gas and Mining

FOR RECORD ONLY

RECEIVED
JUN 13 1996
DIV. OF OIL, GAS & MINING

14. I hereby certify that the foregoing is true and correct

Signed: Cheryl Cameron — Title: Regulatory Compliance Specialist — Date: 5/1/96

(This space for Federal or State office use)

Approved by _____ Title _____ Date _____
Conditions of approval, if any:

Title 18 U.S.C. Section 1001, makes it a crime for any person knowingly and willfully to make to any department or agency of the United States any false, fictitious or fraudulent statements or representations as to any matter within its jurisdiction.

*See Instruction on Reverse Side

Form 3160-5
(June 1990)

UNITED STATES
DEPARTMENT OF THE INTERIOR
BUREAU OF LAND MANAGEMENT

FORM APPROVED
Budget Bureau No. 1004-0135
Expires: March 31, 1993

SUNDRY NOTICES AND REPORTS ON WELLS

Do not use this form for proposals to drill or to deepen or reentry to a different reservoir.
Use "APPLICATION FOR PERMIT—" for such proposals

SUBMIT IN TRIPLICATE

5. Lease Designation and Serial No.: U-50376
6. If Indian, Allottee or Tribe Name:
7. If Unit or CA, Agreement Designation:

1. Type of Well: [ ] Oil Well [ ] Gas Well [X] Other Injection
2. Name of Operator: Inland Production Company
3. Address and Telephone No.: P.O. Box 1446 Roosevelt, Utah 84066 (801)722-5103
4. Location of Well (Footage, Sec., T., R., M., or Survey Description): NE/SW 1915' FSL & 2076' FWL Sec. 21, T8S, R17E
8. Well Name and No.: Boundary Federal #11-21
9. API Well No.: 43-013-30752
10. Field and Pool, or Exploratory Area: Boundary
11. County or Parish, State: Duchesne County, Utah

12. CHECK APPROPRIATE BOX(s) TO INDICATE NATURE OF NOTICE, REPORT, OR OTHER DATA

TYPE OF SUBMISSION	TYPE OF ACTION	
[ ] Notice of Intent	[ ] Abandonment	[ ] Change of Plans
[X] Subsequent Report	[ ] Recompletion	[ ] New Construction
[ ] Final Abandonment Notice	[ ] Plugging Back	[ ] Non-Routine Fracturing
	[ ] Casing Repair	[ ] Water Shut-Off
	[ ] Altering Casing	[X] Conversion to Injection
	[ ] Other On injection	[ ] Dispose Water (Note: Report results of multiple completion on Well Completion or Recompletion Report and Log form.)

13. Describe Proposed or Completed Operations (Clearly state all pertinent details, and give pertinent dates, including estimated date of starting any proposed work. If well is directionally drilled, give subsurface locations and measured and true vertical depths for all markers and zones pertinent to this work.)*

The Boundary Federal #11-21 was put on injection 6/21/96.

RECEIVED
JUL 25 1996
DIV. OF OIL, GAS & MINING

14. I hereby certify that the foregoing is true and correct

Signed Cheryl Cameron Cheryl Cameron Title Regulatory Compliance Specialist Date 7/22/96

(This space for Federal or State office use)

Approved by _____ Title _____ Date _____
Conditions of approval, if any:

Title 18 U.S.C. Section 1001, makes it a crime for any person knowingly and willfully to make to any department or agency of the United States any false, fictitious or fraudulent statements or representations as to any matter within its jurisdiction.

*See Instruction on Reverse Side

FORM 3160-5
(June 1990)

UNITED STATES
DEPARTMENT OF THE INTERIOR
BUREAU OF LAND MANAGEMENT

FORM APPROVED
Budged Bureau No. 1004-0135
Expires March 31, 1993

SUNDRY NOTICES AND REPORTS ON WELLS

Do not use this form for proposals to drill or deepen or reentry to a different reservoir.
Use "APPLICATION FOR PERMIT -" for such proposals

SUBMIT IN TRIPLICATE

5. Lease Designation and Serial No.
U-50376

6. If Indian, Allottee or Tribe Name

7. If unit or CA, Agreement Designation

1. Type of Well
[X] Oil Well [ ] Gas well [ ] Other

8. Well Name and No.
Boundary Federal 11-21

2. Name of Operator
Inland Production Company

9. API Well No.
43-013-30752

3. Address and Telephone No.
P.O. Box 790233 Vernal, UT 84079 Phone No. (801) 789-1866

10. Field and Pool, or Exploratory Area
Boundary

4. Location of Well (Footage, Sec., T., R., M., or Survey Description)
NE/SW
Sec. 21, T8S, R17E

11. County or Parish, State
Duchesne,UT

12 CHECK APPROPRIATE BOX(s) TO INDICATE NATURE OF NOTICE, REPORT, OR OTHER DATA

TYPE OF SUBMISSION	TYPE OF ACTION	
[X] Notice of Intent	[ ] Abandonment	[ ] Change of Plans
	[ ] Recompletion	[ ] New Construction
[ ] Subsequent Report	[ ] Plugging Back	[ ] Non-Routine Fracturing
	[ ] Casing repair	[ ] Water Shut-off
[ ] Final Abandonment Notice	[ ] Altering Casing	[X] Conversion to Injection
	[ ] Other _____	[ ] Dispose Water (Note: Report results of multiple completion on Well Completion or Recompletion Report and Log form.)

13. Describe Proposed or Completed Operations (Clearly state all pertinent details, and give pertinent dates, including estimated date of starting any proposed work. If well is directioally drilled, give subsurface locations and measured and true vertical depths for all markers and zones pertinent to this work)

Inland Production Company requests authorization to convert the Boundary Federal 11-21 from a producing well to a Class II injection well.

APPROVED BY THE STATE
OF UTAH DIVISION OF
OIL, GAS, AND MINING
DATE: 12-23-96
BY: [illegible]

14. I hereby certify that the foregoing is true and correct
Signed Cheryl Cameron Title *Regulatory Compliance Specialist* Date *12/16/96*

(This space of Federal or State office use.)

Approved by _____ Title _____ Date _____

Conditions of approval, if any:

Title 18 U.S.C. Section 1001, makes it a crime for any person knowingly to make to any department of the United States any false, fictitious or fraudulent statements or representations as to any matter within its jurisdiction.

*See Instruction on Reverse Side

To: Lisha
From: Debbie

all of these are 43-013-

Inland Resources Inc.
Greater Boundary Unit
Well List
Status as of March 27, 1998

#12391 "Greater Boundary (GBRV) Unit"

Lease Name	Status	Operator	Twp	Rge	Sec	Spot	Accounting No.	API Code	
BOUNDARY FEDERAL 7-20	3075000051 INJ	INLAND	08S	17E	20	7.0	UMBOI001	30750	8407
* BOUNDARY FED 11-21	INJ	INLAND	08S	17E	21	11.0	UMBOI002	30752	10630
BOUNDARY FEDERAL 15-21	INJ	INLAND	08S	17E	21	15.0	UMBOI003	31622	11924
~~BOUNDARY FEDERAL #10-20~~	~~P&A~~	N/A	08S	17E	20	10	#N/A		
~~TAR SANDS FEDERAL 12-28~~	~~P&A~~	INLAND	08S	17E	28	12.0	#N/A		
~~TAR SANDS FEDERAL #32-29~~	~~P&A~~	N/A	08S	17E	29	7	#N/A		
BOUNDARY FEDERAL 6-20	PDP	INLAND	08S	17E	20	6.0	UMBOP001	31626	11991
BOUNDARY FEDERAL 8-20	~~DRL~~ PDP	INLAND	08S	17E	20	8.0	#N/A	31993	12329
BOUNDARY FEDERAL 9-20	PDP	INLAND	08S	17E	20	9.0	UMBOP002	30690	8408
BOUNDARY FEDERAL 15-20	PDP	INLAND	08S	17E	20	15.0	UMBOP003	30667	8409
BOUNDARY 6-21	PDP	INLAND	08S	17E	21	6.0	UMBOP005	31889	12262
BOUNDARY 7-21	PDP	INLAND	08S	17E	21	7.0	UMZZP053	31640	12002
BOUNDARY 8-21	PDP	INLAND	08S	17E	21	8.0	UMZZP052	31557	11852
BOUNDARY FEDERAL 9-21	PDP	INLAND	08S	17E	21	9.0	UMBOP006	31542	11806
BOUNDARY FEDERAL 10-21	PDP	INLAND	08S	17E	21	10.0	UMBOP007	31532	11803
BOUNDARY FEDERAL 12-21	PDP	INLAND	08S	17E	21	12.0	UMBOP008	31440	11709
BOUNDARY FEDERAL 13-21	PDP	INLAND	08S	17E	21	13.0	UMBOW001	30665	2660
BOUNDARY FEDERAL 14-21	PDP	INLAND	08S	17E	21	14.0	UMBOP009	31441	11768
BOUNDARY FEDERAL 16-21	PDP	INLAND	08S	17E	21	16.0	UMBOP010	31627	11934
TAR SANDS FEDERAL 2-28	PDP	INLAND	08S	17E	28	2.0	UMZZP079	11937	31642
TAR SANDS FEDERAL 3-28	PDP	INLAND	08S	17E	28	3.0	UMZZP078	11923	31623
TAR SANDS FEDERAL 4-28	PDP	INLAND	08S	17E	28	4.0	UMZZP080	11938	31641
TAR SANDS FEDERAL 5-28 (I)	PDP	INLAND	08S	17E	28	5.0	UMZZP114	12171	31697
TAR SANDS FED 6-28	PDP	INLAND	08S	17E	28	6.0	UMZZP116	12241	31921
TAR SANDS FED 13-28	PDP	INLAND	08S	17E	28	13.0	UMZZP105	12176	31771
TAR SANDS FEDERAL 1-29	PDP	INLAND	08S	17E	29	1.0	UMZZP115	12168	31743
TAR SANDS FED 8-29	PDP	INLAND	08S	17E	29	8.0	UMZZP117	12242	31922
TAR SANDS FEDERAL 9-29	PDP	INLAND	08S	17E	29	9.0	#N/A	12281	31942
TAR SANDS FEDERAL 12-29	PDP	INLAND	08S	17E	29	12.0	UMZZP113	12261	31924
TAR SANDS FEDERAL 16-29	PDP	INLAND	08S	17E	29	16.0	UMZZP106	12212	31871
TAR SANDS FEDERAL 1-33	PDP	INLAND	08S	17E	33	1.0	UMZZP108	12265	31863
TAR SANDS FEDERAL 2-33	PDP	INLAND	08S	17E	33	2.0	UMZZP107	12271	31867
BOUNDARY FED 5-21	SI	INLAND	08S	17E	21	5.0	UMBOP004	30822	11162
FEDERAL 1-26	SI	INLAND	08S	17E	26	3.0	431162	4304731953	11227

Thanks for your help

STATE OF UTAH
DIVISION OF OIL, GAS AND MINING

ENTITY ACTION FORM - FORM 6

OPERATOR INLAND PRODUCTION COMPANY

ADDRESS

OPERATOR ACCT. NO. N5160

ACTION CODE	CURRENT ENTITY NO.	NEW ENTITY NO.	API NUMBER	WELL NAME	WELL LOCATION QQ	SC	TP	RG	COUNTY	SPUD DATE	EFFECTIVE DATE
D		12391		**SEE ATTACHED**							5-1-98

WELL 1 COMMENTS: GREATER BOUNDARY (GRRV) UNIT EFF 5-1-98

WELL 2 COMMENTS:

WELL 3 COMMENTS:

WELL 4 COMMENTS:

WELL 5 COMMENTS:

ACTION CODES (See instructions on back of form)
- A - Establish new entity for new well (single well only)
- B - Add new well to existing entity (group or unit well)
- C - Re-assign well from one existing entity to another existing entity
- D - Re-assign well from one existing entity to a new entity
- E - Other (explain in comments section)

NOTE: Use COMMENT section to explain why each Action Code was selected.

(3/89)

L. CORDOVA (DOGM)
Signature

ENG. TECH
Title

6-26-98
Date

Phone No. ( )

Michael O. Leavitt
Governor
Kathleen Clarke
Executive Director
Lowell P. Braxton
Division Director

State of Utah

DEPARTMENT OF NATURAL RESOURCES
DIVISION OF OIL, GAS AND MINING

1594 West North Temple, Suite 1210
PO Box 145801
Salt Lake City, Utah 84114-5801
801-538-5340
801-359-3940 (Fax)
801-538-7223 (TDD)

UNDERGROUND INJECTION CONTROL PERMIT

Cause No. UIC-234

Operator: Inland Production Company

Well: Jorgenson State 16-4

Location: Section 16, Township 8 South, Range 17 East, County: Duchesne

API No.: 43-013-30752

Well Type: Enhanced Recovery (waterflood)

Stipulations of Permit Approval

1. Approval for conversion to Injection Well issued on January 12, 1999.
2. Maximum Allowable Injection Pressure: 1310 psig
3. Maximum Allowable Injection Rate: (restricted by pressure limitation)
4. Injection Interval: Green River Formation (4444 feet - 5523 feet)

Approved by: John R. Baza
Associate Director, Oil And Gas

5/6/99
Date

DOGM Form 5
May 5, 1987

STATE OF UTAH
DEPARTMENT OF NATURAL RESOURCES
DIVISION OF OIL, GAS, AND MINING

5. LEASE DESIGNATION AND SERIAL NO.
U-50376

1. **SUNDRY NOTICES AND REPORTS ON WELLS**

(Do not use this form for proposals to drill or to deepen or plug back to a different reservoir.
Use "APPLICATION FOR PERMIT--" for such proposals.)

6. IF INDIAN, ALLOTTEE OR TRIBAL NAME
N/A

OIL WELL [ ] GAS WELL [ ] OTHER [X] INJECTION

7. UNIT AGREEMENT NAME
GREATER BOUNDARY

2. NAME OF OPERATOR
INLAND PRODUCTION COMPANY

8. FARM OR LEASE NAME
BOUNDARY FED 11-21

3. ADDRESS OF OPERATOR
ROUTE #3 BOX 3630, MYTON, UTAH 84052
(435) 646-3721

9. WELL NO.
Federal # 11-21

4. LOCATION OF WELL (Report location clearly and in accordance with any State requirements.*
See also space 17 below.)
At surface
NE/SW 1915 FSL 2076 FWL

10. FIELD AND POOL, OR WILDCAT
TREATY BOUNDARY

11. SEC., T., R., M., OR BLK. AND SURVEY OR AREA
NE/SW Section 21, T08S R17E

14 API NUMBER	15. ELEVATIONS (Show whether DF, RT, GR, etc.)	12. COUNTY OR PARISH	13. STATE
43-013-30752	**5240 GR**	**DUCHESNE**	**UT**

16. **Check Appropriate Box To Indicate Nature of Notice, Report, or Other Data**

NOTICE OF INTENTION TO:		SUBSEQUENT REPORT OF:	
TEST WATER SHUT-OFF [ ]	PULL OR ALTER CASING [ ]	WATER SHUT-OFF [ ]	REPAIRING WELL [ ]
FRACTURE TREAT [ ]	MULTIPLE COMPLETE [ ]	FRACTURE TREATMENT [ ]	ALTERING CASING [ ]
SHOOT OR ACIDIZE [ ]	ABANDON* [ ]	SHOOTING OR ACIDIZING [ ]	ABANDONMENT* [ ]
REPAIR WELL [ ]	[ ]	(OTHER) **Step-Rate test**	[X]
(OTHER) _____	[ ]	(Note: Report results of multiple completion on Well Completion or Recompletion Report and Log form.)	

17 DESCRIBE PROPOSED OR COMPLETED OPERATIONS. (Clearly state all pertinent details, and give pertinent dates, including estimated date of starting any proposed work. If well is directionally drilled, give subsurface locations and measured and true vertical depths for all markers and zones pertinent to this work.)*

On March 30, 2000 Inland Production Company conducted a Step-Rate Test (SRT) on the Boundary Federal # 11-21 injection well in the Greater Boundary Unit. Due to the results of the attached SRT Inland is requesting approval to change our Maximum Allowable Injection Pressure from 1759 psi to 1716 psi on this well.

Approved by the Utah Division of Oil, Gas and Mining
Date: 4/4/00
By: [signature]

RECEIVED
APR 03 2000
DIVISION OF OIL, GAS AND MINING

COPY SENT TO OPERATOR
Date: 4-5-00
Initials: CHD

18 I hereby certify that the foregoing is true and correct
SIGNED [signature] TITLE Operations Manager DATE 3/30/00

(This space for Federal or State office use)
APPROVED BY _____ TITLE _____ DATE _____
CONDITIONS OF APPROVAL, IF ANY:

* See Instructions On Reverse Side

Boundary 11-21
(G. Boundary Unit)
Step Rate Test
March 30, 2000

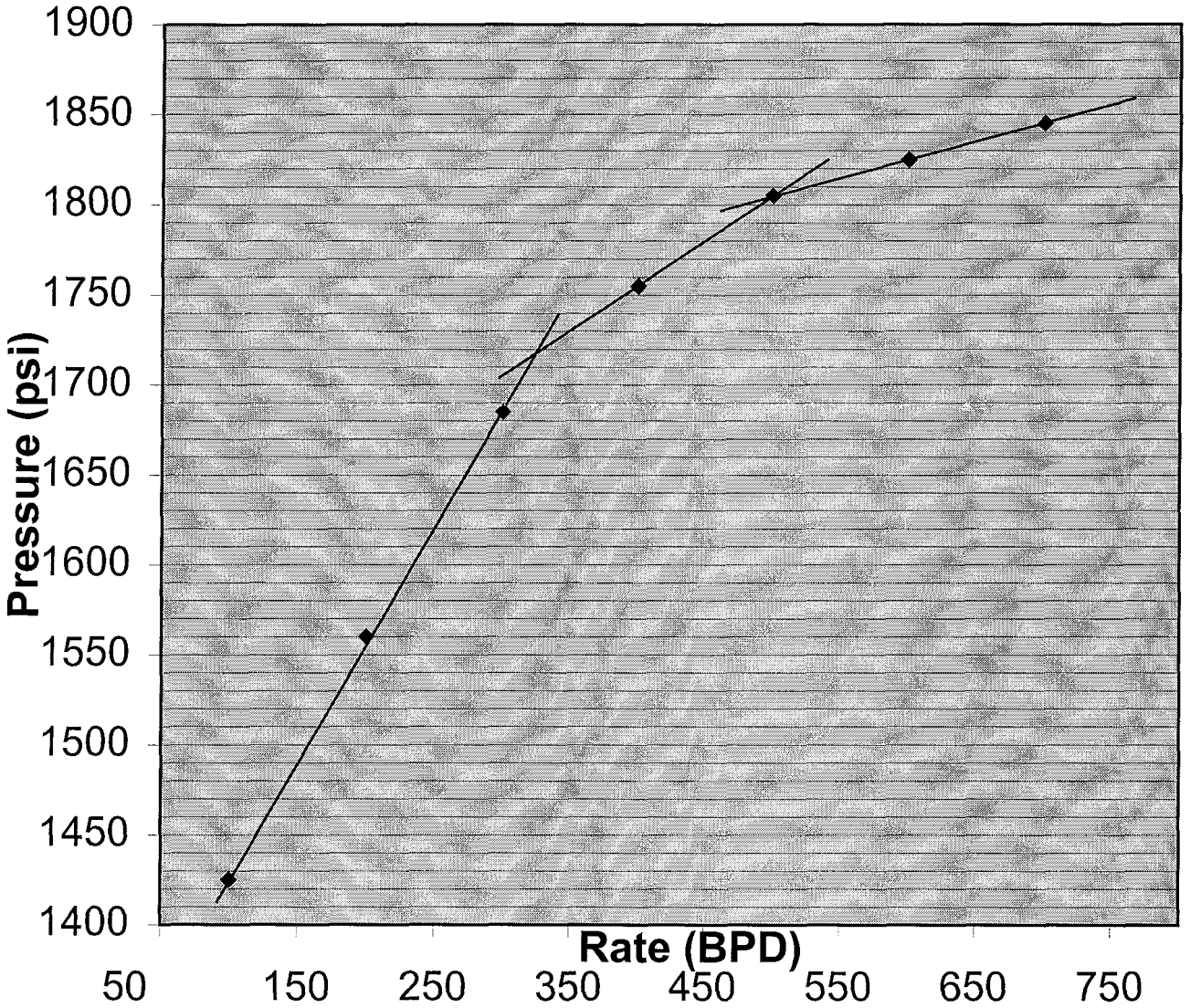

ISIP: 1750 psi
Fracture pressure: 1716 psi
FG: 0.752

Step	Rate(bpm	Pressure(psi)
1	100	1425
2	200	1560
3	300	1685
4	400	1755
5	500	1805
6	600	1825
7	700	1845

RECEIVED
APR 03 2000
DIVISION OF
OIL, GAS AND MINING

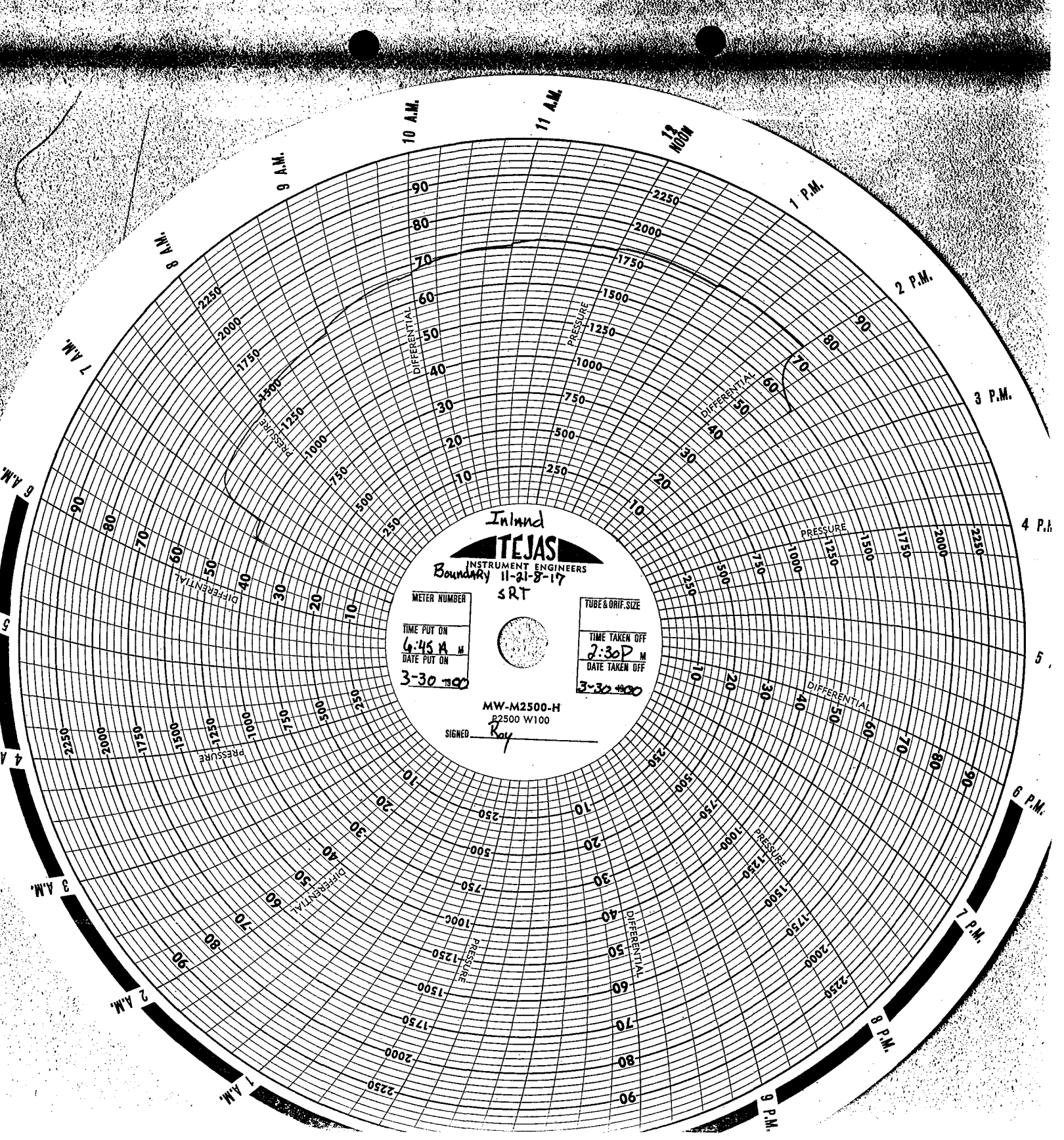

RECEIVED

APR 0 3 2000

DIVISION OF
OIL, GAS AND MINING

PRODUCTION COMPANY
A Subsidiary of Inland Resources Inc.

March 30, 2000

RECEIVED
APR 0 3 2000
DIVISION OF
OIL, GAS AND MINING

State of Utah
Division of Oil, Gas & Mining
Attn: Dan Jarvis
1594 West North Temple - Suite 1210
P.O. Box 145801
Salt Lake City, Utah 84114-5801

RE: Step-Rate Test
Boundary Federal # 11-21

Dear Dan:

Please find enclosed Step-Rate Tests (SRT) results on the Boundary Federal #11-21 injection well in the Greater Boundary Unit. Inland Production Company conducted the SRT on March 30, 2000. Due to the results of the SRT Inland is requesting a change in the maximum allowable injection pressure from 1759 psi to 1716 psi for this well.

Thank you for your assistance. If you have any questions or need further information, please call me at (435) 646-3721.

Sincerely,

Brad Mecham
Operations Manager

/bm

Inland Production Company Field Office • Route 3, Box 3630 • Myton, UT 84052 • 435-646-3721 • FAX 435-646-3031
Corporate Office • 410 Seventeenth Street, Suite 700 • Denver, CO 80202 • 303-893-0102 • FAX 303-893-0103

DOGM Form 5
May 5, 1987

STATE OF UTAH
DEPARTMENT OF NATURAL RESOURCES
DIVISION OF OIL, GAS, AND MINING

5. LEASE DESIGNATION AND SERIAL NO.
U-50376

1. **SUNDRY NOTICES AND REPORTS ON WELLS**

(Do not use this form for proposals to drill or to deepen or plug back to a different reservoir. Use "APPLICATION FOR PERMIT--" for such proposals.)

6. IF INDIAN, ALLOTTEE OR TRIBAL NAME
N/A

OIL WELL [X] GAS WELL [ ] OTHER [x] injection

7. UNIT AGREEMENT NAME
GREATER BOUNDARY

2. NAME OF OPERATOR
INLAND PRODUCTION COMPANY

8. FARM OR LEASE NAME
BOUNDARY FED 11-21

3. ADDRESS OF OPERATOR
Route 3 Box 3630, Myton Utah, 84052
(435) 646-3721

9. WELL NO.
11-21-8-17

4. LOCATION OF WELL (Report location clearly and in accordance with any State requirements.* See also space 17 below.)
At surface
NE/SW 1915 FSL 2076 FWL

10 FIELD AND POOL, OR WILDCAT
TREATY BOUNDARY

11 SEC., T., R., M., OR BLK. AND SURVEY OR AREA
NE/SW Section 21, T08S R17E

14 API NUMBER	15. ELEVATIONS (Show whether DF, RT, GR, etc.)	12 COUNTY OR PARISH	13 STATE
43-013-30752	5240 GR	DUCHESNE	UT

16. **Check Appropriate Box To Indicate Nature of Notice, Report, or Other Data**

NOTICE OF INTENTION TO:				SUBSEQUENT REPORT OF:			
TEST WATER SHUT-OFF	[ ]	PULL OR ALTER CASING	[ ]	WATER SHUT-OFF	[ ]	REPAIRING WELL	[ ]
FRACTURE TREAT	[ ]	MULTIPLE COMPLETE	[ ]	FRACTURE TREATMENT	[ ]	ALTERING CASING	[ ]
SHOOT OR ACIDIZE	[ ]	ABANDON*	[ ]	SHOOTING OR ACIDIZING	[ ]	ABANDONMENT*	[ ]
REPAIR WELL	[ ]		[ ]	(OTHER) MIT on Casing			[X]
(OTHER)			[ ]	(Note: Report results of multiple completion on Well Completion or Recompletion Report and Log form.)			

17 DESCRIBE PROPOSED OR COMPLETED OPERATIONS. (Clearly state all pertinent details, and give pertinent dates, including estimated date of starting any proposed work. If well is directionally drilled, give subsurface locations and measured and true vertical depths for all markers and zones pertinent to this work.)*

The above referenced well had a MIT test done on the casing on 4-19-00. Mr. Bahram Jafari and Mr. Nathan Wiser with the EPA witnessed the test. The casing was pressured to 1070 psi with 1475 psi on tubing. No loss off pressure wash charted in 30 minutes. The pressure was then released.

18 I hereby certify that the foregoing is true and correct
SIGNED Ron Shuck TITLE Production Foreman DATE 4/19/00
Ron Shuck

(This space for Federal or State office use)
APPROVED BY _____ TITLE COPY SENT TO OPERATOR DATE _____
Date: 5-12-00
Initials: CHD
CONDITIONS OF APPROVAL, IF ANY:

Accepted by the
Utah Division of
Oil, Gas and Mining
Date: 5/9/00
By: [signature]

* See Instructions On Reverse Side

RECEIVED
APR 24 2000
DIVISION OF
OIL, GAS AND MINING

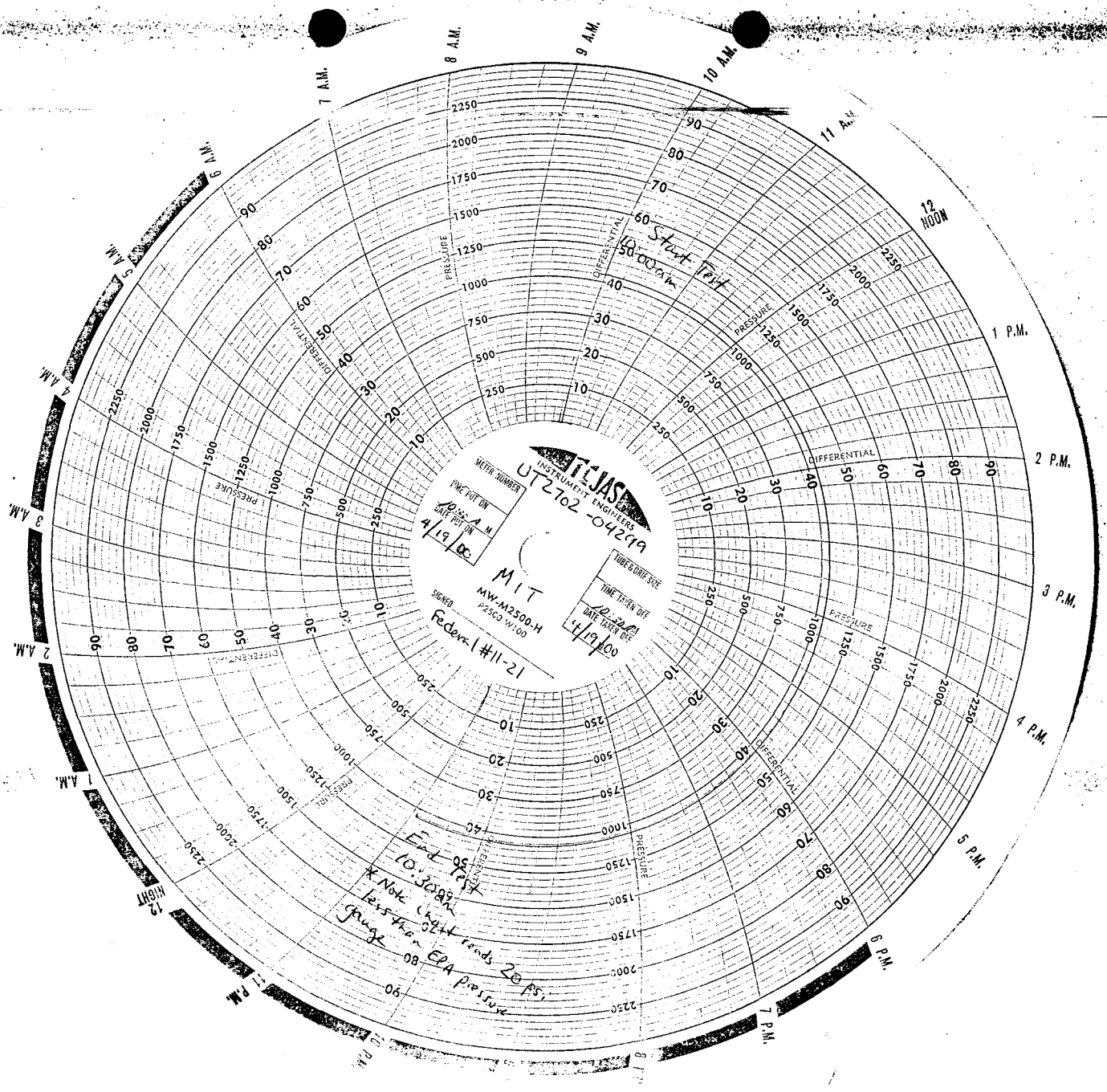

RECEIVED

APR 24 2000

DIVISION OF
OIL, GAS AND MINING

Mechanical Integrity Test
Casing or Annulus Pressure Test

U.S. Environmental Protection Agency (8ENF-T)
Underground Injection Control Program, UIC Implementation Section, [redacted]
999 18th Street, Suite 500, Denver, CO 80202-2466

EPA Witness: Bahram Tarari Nathan Wiser Date 4/19/00 Time 9:30 am/pm
Test conducted by: Ron Shack
Others present: Matt Fillingham

Well: Boundary Fed. 11-21-8-17	Well ID: UT2702-04299
Field: Boundary Unit	Company: Inland
Well Location: SW 21 Sec. 8S. 17E.	Address: Myton, UT.

	Time	Test #1	Test #2	Test #3
10:00	0 min	1070 psig	psig	psig
	5	1070		
	10	1070		
	15	1070		
	20	1070		
	25	1070		
10:30 AM	30 min	1070		
	35			
	40			
	45			
	50			
	55			
	60 min			
Tubing press		1475 psig	psig	psig
Result (circle)		Pass Fail	Pass Fail	Pass Fail

RECEIVED
APR 24 2000
DIVISION OF
OIL, GAS AND MINING

Signature of EPA Witness: Nathan M. Wiser

See back of page for any additional comments & compliance followup.

This is the front side of two sides

Mechanical Integrity Test

dditional comments for mechanical integrity test 5 yr. test

RECEIVED

APR 24 2000

DIVISION OF
OIL, GAS AND MINING

OFFICE USE ONLY - COMPLIANCE FOLLOWUP Staff _____ Date _____

Do you agree that the well passed/failed the test? [ ] Yes [ ] No
Transfer of ownership? [ ] Yes [ ] No OLD _____ NEW _____
Change in operating status (computer update) [ ] Yes _____ [ ] No

Possible violation identified? [ ] Yes [ ] No
If YES - Followup initiated? [ ] Yes _____ [ ] No

[ ] Data Entry [ ] Compliance Staff [ ] 2nd Data Entry [ ] Hard Copy Filing

This is the back side of two sides.

United States Department of the Interior

BUREAU OF LAND MANAGEMENT
Utah State Office
P.O. Box 45155
Salt Lake City, UT 84145-0155
http://www.blm.gov

TAKE PRIDE IN AMERICA

IN REPLY REFER TO:
3106
(UT-924)

September 16, 2004

Memorandum

To: Vernal Field Office

From: Acting Chief, Branch of Fluid Minerals

Subject: Merger Approval

Attached is an approved copy of the name change recognized by the Utah State Office. We have updated our records to reflect the merger from Inland Production Company into Newfield Production Company on September 2, 2004.

Michael L Coulthard

Michael Coulthard
Acting Chief, Branch of
Fluid Minerals

Enclosure
1. State of Texas Certificate of Registration

cc: MMS, Reference Data Branch, James Sykes, PO Box 25165, Denver CO 80225
State of Utah, DOGM, Attn: Earlene Russell, PO Box 145801, SLC UT 84114
Teresa Thompson
Joe Incardine
Connie Seare

UTSL-
071572A
065914

UTU-

02458
03563
03563A
04493
05843
07978
09803
017439B
017985
017991
017992
018073
019222
020252
020252A
020254
020255
020309D
022684A
027345
034217A
035521
035521A
038797
058149
063597A
075174
096547
096550

10760
11385
13905
15392

15855
16535
16539
16544
17036
17424
18048
18399
19267
26026A
30096
30103
31260
33992
34173
34346
36442
36846
38411
38428
38429
38431
39713
39714
40026
40652
40894
41377
44210
44426
44430
45431
47171
49092
49430
49950
50376
50385
50376
50750
51081
52013
52018
58546

61052
62848
63073B
63073D
63073E
63073O
64917
64379
64380
64381
64805
64806
64917
65207
65210
65635
65967
65969
65970
66184
66185
66191
67168
67170
67208
67549
67586
67845
68105
68548
68618
69060
69061
69744
70821
72103
72104
72105
72106
72107
72108
73086
73087
73807

73088
73089
73520A
74108
74805
74806
74807
74808
74389
74390
74391
74392
74393
74398
74399
74400
74404
74405
74406
74411
74805
74806
74826
74827
74835
74868
74869
74870
74872
74970
75036
75037
75038
75039
75075
75078
75089
75090
75234
75238
76239
76240
76241
76560

76561
76787
76808
76813
76954
76956
77233
77234
77235
77337
77338
77339
77357
77359
77365
77369
77370
77546
77553
77554
78022
79013
79014
79015
79016
79017
79831
79832
79833
79831
79834
80450
80915
81000

63073X
63098A
68528A
72086A
72613A
73520X
74477X
75023X
76189X
76331X
76788X
77098X
77107X
77236X
77376X
78560X
79485X
79641X
80207X
81307X

Corporations Section
P.O.Box 13697
Austin, Texas 78711-3697

Geoffrey S. Connor
Secretary of State

Office of the Secretary of State

The undersigned, as Secretary of State of Texas, does hereby certify that the attached is a true and correct copy of each document on file in this office as described below:

Newfield Production Company
Filing Number: 41530400

Articles of Amendment September 02, 2004

In testimony whereof, I have hereunto signed my name officially and caused to be impressed hereon the Seal of State at my office in Austin, Texas on September 10, 2004.

Secretary of State

ARTICLES OF AMENDMENT
TO THE
ARTICLES OF INCORPORATION
OF
INLAND PRODUCTION COMPANY

FILED
In the Office of the
Secretary of State of Texas

SEP 02 2004

Corporations Section

Pursuant to the provisions of Article 4.04 of the Texas Business Corporation Act (the "TBCA"), the undersigned corporation adopts the following articles of amendment to the articles of incorporation:

ARTICLE 1 – Name

The name of the corporation is Inland Production Company.

ARTICLE 2 – Amended Name

The following amendment to the Articles of Incorporation was approved by the Board of Directors and adopted by the shareholders of the corporation on August 27, 2004.

The amendment alters or changes Article One of the Articles of Incorporation to change the name of the corporation so that, as amended, Article One shall read in its entirety as follows:

"ARTICLE ONE – The name of the corporation is Newfield Production Company."

ARTICLE 3 – Effective Date of Filing

This document will become effective upon filing.

The holder of all of the shares outstanding and entitled to vote on said amendment has signed a consent in writing pursuant to Article 9.10 of the TBCA, adopting said amendment, and any written notice required has been given.

IN WITNESS WHEREOF, the undersigned corporation has executed these Articles of Amendment as of the 1st day of September, 2004.

INLAND RESOURCES INC.

By: Susan G. Riggs
Susan G. Riggs, Treasurer

STATE OF UTAH
DEPARTMENT OF NATURAL RESOURCES
DIVISION OF OIL, GAS AND MINING

UIC FORM 5

TRANSFER OF AUTHORITY TO INJECT

Well Name and Number: See Attached List	API Number
Location of Well Footage : QQ, Section, Township, Range: County : State : UTAH	Field or Unit Name: See Attached List Lease Designation and Number

EFFECTIVE DATE OF TRANSFER: 9/1/2004

CURRENT OPERATOR

Company: Inland Production Company
Address: 1401 17th Street Suite 1000
city Denver state Co zip 80202
Phone: (303) 893-0102
Comments:

Name: Brian Harris
Signature: Brian Harris
Title: Engineering Tech.
Date: 9/15/2004

NEW OPERATOR

Company: Newfield Production Company
Address: 1401 17th Street Suite 1000
city Denver state Co zip 80202
Phone:
Comments:

Name: Brian Harris
Signature: Brian Harris
Title: Engineering Tech.
Date: 9/15/2004

(This space for State use only)

Transfer approved by: D. Hunt
Title: Pet. Services Manager
Approval Date: 9-20-04

Comments: Note: Indian Country wells will require EPA approval.

(5/2000)

RECEIVED
SEP 20 2004
DIV. OF OIL, GAS & MINING

Division of Oil, Gas and Mining

OPERATOR CHANGE WORKSHEET

ROUTING
1. GLH
2. CDW
3. FILE

Change of Operator (Well Sold) — Designation of Agent/Operator

X Operator Name Change — **Merger**

The operator of the well(s) listed below has changed, effective: **9/1/2004**

FROM: (Old Operator):	**TO:** (New Operator):
N5160-Inland Production Company	N2695-Newfield Production Company
Route 3 Box 3630	Route 3 Box 3630
Myton, UT 84052	Myton, UT 84052
Phone: 1-(435) 646-3721	Phone: 1-(435) 646-3721

CA No. **Unit:** **GREATER BOUNDARY (GR)**

WELL(S)

NAME	SEC	TWN	RNG	API NO	ENTITY NO	LEASE TYPE	WELL TYPE	WELL STATUS	
BOUNDARY FED 15-20	20	080S	170E	4301330667	12391	Federal	WI	A	
BOUNDARY FED 9-20	20	080S	170E	4301330690	12391	Federal	WI	A	
BOUNDARY FED 7-20	20	080S	170E	4301330750	12391	Federal	WI	A	
BOUNDARY FED 6-20	20	080S	170E	4301331626	12391	Federal	OW	S	
BOUNDARY FED 13-21	21	080S	170E	4301330665	12391	Federal	WI	A	
BOUNDARY FED 11-21	21	080S	170E	4301330752	12391	Federal	WI	A	
BOUNDARY FED 5-21	21	080S	170E	4301330822	12391	Federal	WI	A	
BOUNDARY FED 12-21	21	080S	170E	4301331440	12391	Federal	OW	S	
BOUNDARY FED 14-21	21	080S	170E	4301331441	12391	Federal	OW	P	
BOUNDARY FED 10-21	21	080S	170E	4301331532	12391	Federal	OW	P	
BOUNDARY FED 9-21	21	080S	170E	4301331542	12391	Federal	WI	A	
BOUNDARY 8-21	21	080S	170E	4301331557	12391	Fee	OW	P	
BOUNDARY FED 15-21	21	080S	170E	4301331622	12391	Federal	WI	A	
BOUNDARY FED 16-21	21	080S	170E	4301331627	12391	Federal	OW	P	
BOUNDARY 7-21	21	080S	170E	4301331640	12391	Fee	WI	A	
TAR SANDS FED 3-28	28	080S	170E	4301331623	12391	Federal	WI	A	
TAR SANDS FED 4-28	28	080S	170E	4301331641	12391	Federal	OW	P	
TAR SANDS FED 2-28	28	080S	170E	4301331642	12391	Federal	OW	S	
TAR SANDS FED 5-28 (I)	28	080S	170E	4301331697	12391	Federal	WI	A	
GB FED 7-29R-8-17	29	080S	170E	4301330435		Federal	D	PA	K

OPERATOR CHANGES DOCUMENTATION

Enter date after each listed item is completed

1. (R649-8-10) Sundry or legal documentation was received from the **FORMER** operator on: 9/15/2004
2. (R649-8-10) Sundry or legal documentation was received from the **NEW** operator on: 9/15/2004
3. The new company was checked on the **Department of Commerce, Division of Corporations Database on:** 2/23/2005
4. Is the new operator registered in the State of Utah: YES Business Number: 755627-0143
5. If **NO**, the operator was contacted contacted on:

6a. (R649-9-2)Waste Management Plan has been received on: IN PLACE

6b. Inspections of LA PA state/fee well sites complete on: waived

7. **Federal and Indian Lease Wells:** The BLM and or the BIA has approved the merger, name change, or operator change for all wells listed on Federal or Indian leases on: BLM BIA

8. **Federal and Indian Units:**
The BLM or BIA has approved the successor of unit operator for wells listed on: n/a

9. **Federal and Indian Communization Agreements ("CA"):**
The BLM or BIA has approved the operator for all wells listed within a CA on: na/

10. **Underground Injection Control ("UIC")** The Division has approved UIC Form 5, **Transfer of Authority to Inject,** for the enhanced/secondary recovery unit/project for the water disposal well(s) listed on: 2/23/2005

DATA ENTRY:

1. Changes entered in the **Oil and Gas Database on:** 2/28/2005
2. Changes have been entered on the **Monthly Operator Change Spread Sheet on:** 2/28/2005
3. Bond information entered in RBDMS on: 2/28/2005
4. Fee/State wells attached to bond in RBDMS on: 2/28/2005
5. Injection Projects to new operator in RBDMS on: 2/28/2005
6. Receipt of Acceptance of Drilling Procedures for APD/New on: waived

FEDERAL WELL(S) BOND VERIFICATION:

1. Federal well(s) covered by Bond Number: UT 0056

INDIAN WELL(S) BOND VERIFICATION:

1. Indian well(s) covered by Bond Number: 61BSBDH2912

FEE & STATE WELL(S) BOND VERIFICATION:

1. (R649-3-1) The **NEW** operator of any fee well(s) listed covered by Bond Number 61BSBDH2919

2. The **FORMER** operator has requested a release of liability from their bond on: n/a*
The Division sent response by letter on: n/a

LEASE INTEREST OWNER NOTIFICATION:

3. (R649-2-10) The **FORMER** operator of the fee wells has been contacted and informed by a letter from the Division of their responsibility to notify all interest owners of this change on: n/a

COMMENTS:

*Bond rider changed operator name from Inland Production Company to Newfield Production Company - **received 2/23/05**

STATE OF UTAH
DEPARTMENT OF NATURAL RESOURCES
DIVISION OF OIL, GAS AND MINING

SUNDRY NOTICES AND REPORTS ON WELLS

) not use this form for proposals to drill new wells, significantly deepen existing wells below current bottom-hole depth, reenter plugged wells, to drill horizontal laterals. Use APPLICATION FOR PERMIT TO DRILL form for such proposals.

5. LEASE DESIGNATION AND SERIAL NUMBER: UTU76954
6. IF INDIAN, ALLOTTEE OR TRIBE NAME:
7. UNIT or CA AGREEMENT NAME: GREATER BOUNDARY II
8. WELL NAME and NUMBER: BOUNDARY FED 11-21
9. API NUMBER: 4301330752
10. FIELD AND POOL, OR WILDCAT: Monument Butte

1. TYPE OF WELL: OIL WELL ☐ GAS WELL ☐ OTHER Injection well

2. NAME OF OPERATOR: Newfield Production Company

3. ADDRESS OF OPERATOR: Route 3 Box 3630 CITY Myton STATE UT ZIP 84052 PHONE NUMBER 435.646.3721

4. LOCATION OF WELL:
FOOTAGES AT SURFACE: 1915 FSL 2076 FWL
COUNTY: Duchesne
QTR/QTR, SECTION, TOWNSHIP, RANGE, MERIDIAN: NE/SW, 21, T8S, R17E
STATE: Utah

11. CHECK APPROPRIATE BOXES TO INDICATE NATURE OF NOTICE, REPORT, OR OTHER DATA

TYPE OF ACTION SubDate

TYPE OF SUBMISSION	TYPE OF ACTION		
☐ NOTICE OF INTENT (Submit in Duplicate)	☐ ACIDIZE	☐ DEEPEN	☐ REPERFORATE CURRENT FORMATION
Approximate date work will	☐ ALTER CASING	☐ FRACTURE TREAT	☐ SIDETRACK TO REPAIR WELL
	☐ CASING REPAIR	☐ NEW CONSTRUCTION	☐ TEMPORARITLY ABANDON
	☐ CHANGE TO PREVIOUS PLANS	☐ OPERATOR CHANGE	☐ TUBING REPAIR
	☐ CHANGE TUBING	☐ PLUG AND ABANDON	☐ VENT OR FLAIR
☒ SUBSEQUENT REPORT (Submit Original Form Only)	☐ CHANGE WELL NAME	☐ PLUG BACK	☐ WATER DISPOSAL
Date of Work Completion:	☐ CHANGE WELL STATUS	☐ PRODUCTION (START/STOP)	☐ WATER SHUT-OFF
04/07/2005	☐ COMMINGLE PRODUCING FORMATIONS	☐ RECLAMATION OF WELL SITE	☒ OTHER: - 5 Year MIT
	☐ CONVERT WELL TYPE	☐ RECOMPLETE - DIFFERENT FORMATION	

12. DESCRIBE PROPOSED OR COMPLETED OPERATIONS. Clearly show all pertinent details including dates, depths, volumes, etc.

A 5 Year MIT was conducted on the subject well. On 3/24/05 Mr. Nathan Wiser was notified of the intent to conduct a MIT on the casing. On 3/30/05 the casing was pressured to 1220 psi w/ no pressure loss charted in the 1/2 hour test. No governmental agencies were able to witness the test.

Accepted by the
Utah Division of
Oil, Gas and Mining
FOR RECORD ONLY

NAME (PLEASE PRINT) Krisha Russell TITLE Production Clerk

SIGNATURE Krisha Russell DATE 04/07/2005

(This space for State use only)

RECEIVED
APR 11 2005
DIV. OF OIL, GAS & MINING

Mechanical Integrity Test

Casing or Annulus Pressure Mechanical Integrity Test

U.S. Environmental Protection Agency
Underground Injection Control Program
999 18th Street, Suite 500 Denver, CO 80202-2466

EPA Witness: _____ Date: 03/29/05
Test conducted by: Dale Giles
Others present: _____

Well Name: Boundary Fed. 11-21-8-17 Type: ER SWD Status: AC TA UC
Field: Greater Boundary
Location: _____ Sec: 21 T 8 N/(S) R 17 (E)/W County: Duchesne State: UT
Operator: Newfield Production Co.
Last MIT: / / Maximum Allowable Pressure: 1716 PSIG

Is this a regularly scheduled test? [X] Yes [ ] No
Initial test for permit? [ ] Yes [ ] No
Test after well rework? [ ] Yes [ ] No
Well injecting during test? [X] Yes [ ] No If Yes, rate: 40 bpd

Pre-test casing/tubing annulus pressure: 0 psig

MIT DATA TABLE	Test #1	Test #2	Test #3
TUBING	*PRESSURE*		
Initial Pressure	1680 psig	psig	psig
End of test pressure	1680 psig	psig	psig
CASING / TUBING	*ANNULUS*	*PRESSURE*	
0 minutes	1220 psig	psig	psig
5 minutes	1220 psig	psig	psig
10 minutes	1220 psig	psig	psig
15 minutes	1220 psig	psig	psig
20 minutes	1220 psig	psig	psig
25 minutes	1220 psig	psig	psig
30 minutes	1220 psig	psig	psig
_____ minutes	psig	psig	psig
_____ minutes	psig	psig	psig
RESULT	[ ] Pass [ ] Fail	[ ] Pass [ ] Fail	[ ] Pass [ ] Fail

Does the annulus pressure build back up after the test ? [ ] Yes [X] No

MECHANICAL INTEGRITY PRESSURE TEST

Additional comments for mechanical integrity pressure test, such as volume of fluid added to annulus and bled back at end of test, reason for failing test (casing head leak, tubing leak, other), etc.:

_____

Signature of Witness: _____

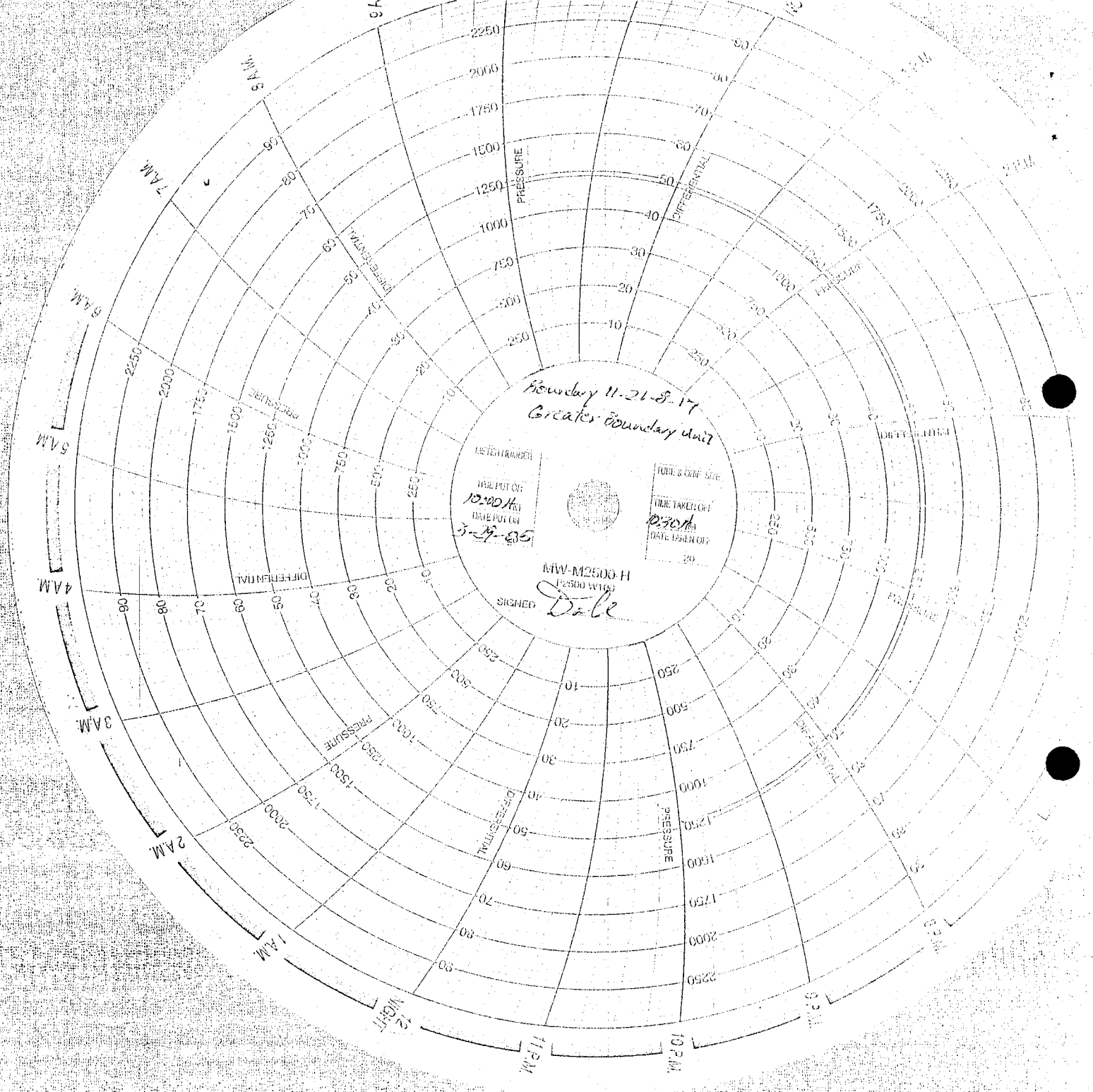
Boundary 11-21-8-17
Creates Boundary unit
TIME PUT ON
10:00 AM
DATE PUT ON
5-29-85
TIME TAKEN OFF
10:30 AM
DATE TAKEN OFF
20
MW-M2500-H
SIGNED
Dale
PRESSURE
DIFFERENTIAL
12 MIDNIGHT
1 A.M.
2 A.M.
3 A.M.
4 A.M.
5 A.M.
6 A.M.
7 A.M.
8 A.M.
9 A.M.
10 A.M.
11 A.M.
12 NOON

STATE OF UTAH
DEPARTMENT OF NATURAL RESOURCES
DIVISION OF OIL, GAS AND MINING

SUNDRY NOTICES AND REPORTS ON WELLS

Do not use this form for proposals to drill new wells, significantly deepen existing wells below current bottom-hole depth, reenter plugged wells, to drill horizontal laterals. Use APPLICATION FOR PERMIT TO DRILL form for such proposals.

5. LEASE DESIGNATION AND SERIAL NUMBER: UTU76954
6. IF INDIAN, ALLOTTEE OR TRIBE NAME:
7. UNIT or CA AGREEMENT NAME: GREATER BOUNDARY II
8. WELL NAME and NUMBER: BOUNDARY FED 11-21
9. API NUMBER: 4301330752
10. FIELD AND POOL, OR WILDCAT: Monument Butte

1. TYPE OF WELL: OIL WELL ☐ GAS WELL ☐ OTHER Injection well

2. NAME OF OPERATOR: Newfield Production Company

3. ADDRESS OF OPERATOR: Route 3 Box 3630 CITY Myton STATE UT ZIP 84052 PHONE NUMBER 435.646.3721

4. LOCATION OF WELL:
FOOTAGES AT SURFACE: 1915 FSL 2076 FWL COUNTY: Duchesne
QTR/QTR, SECTION, TOWNSHIP, RANGE, MERIDIAN: NE/SW, 21, T8S, R17E STATE: Utah

11. CHECK APPROPRIATE BOXES TO INDICATE NATURE OF NOTICE, REPORT, OR OTHER DATA

TYPE OF ACTION SubDate

TYPE OF SUBMISSION	TYPE OF ACTION		
☐ NOTICE OF INTENT (Submit in Duplicate)	☐ ACIDIZE	☐ DEEPEN	☐ REPERFORATE CURRENT FORMATION
Approximate date work will	☐ ALTER CASING	☐ FRACTURE TREAT	☐ SIDETRACK TO REPAIR WELL
	☐ CASING REPAIR	☐ NEW CONSTRUCTION	☐ TEMPORARILY ABANDON
	☐ CHANGE TO PREVIOUS PLANS	☐ OPERATOR CHANGE	☐ TUBING REPAIR
	☐ CHANGE TUBING	☐ PLUG AND ABANDON	☐ VENT OR FLAIR
☒ SUBSEQUENT REPORT (Submit Original Form Only)	☐ CHANGE WELL NAME	☐ PLUG BACK	☐ WATER DISPOSAL
	☐ CHANGE WELL STATUS	☐ PRODUCTION (START/STOP)	☐ WATER SHUT-OFF
Date of Work Completion:	☐ COMMINGLE PRODUCING FORMATIONS	☐ RECLAMATION OF WELL SITE	☒ OTHER: - Step Rate Test
07/21/2005	☐ CONVERT WELL TYPE	☐ RECOMPLETE - DIFFERENT FORMATION	

12. DESCRIBE PROPOSED OR COMPLETED OPERATIONS. Clearly show all pertinent details including dates, depths, volumes, etc.

A step rate test was conducted on the subject well on June 20, 2005. Results from the test indicate that the fracture gradient is .788 psi/ft. Therefore, Newfield is requesting that the maximum allowable injection pressure (MAIP) be changed to 1910 psi.

RECEIVED
JUL 2 6 2005
DIV. OF OIL, GAS & MINING

Accepted by the Utah Division of Oil, Gas and Mining
FOR RECORD ONLY

NAME (PLEASE PRINT) Mike Guinn TITLE Engineer
SIGNATURE DATE 07/21/2005

(This space for State use only)

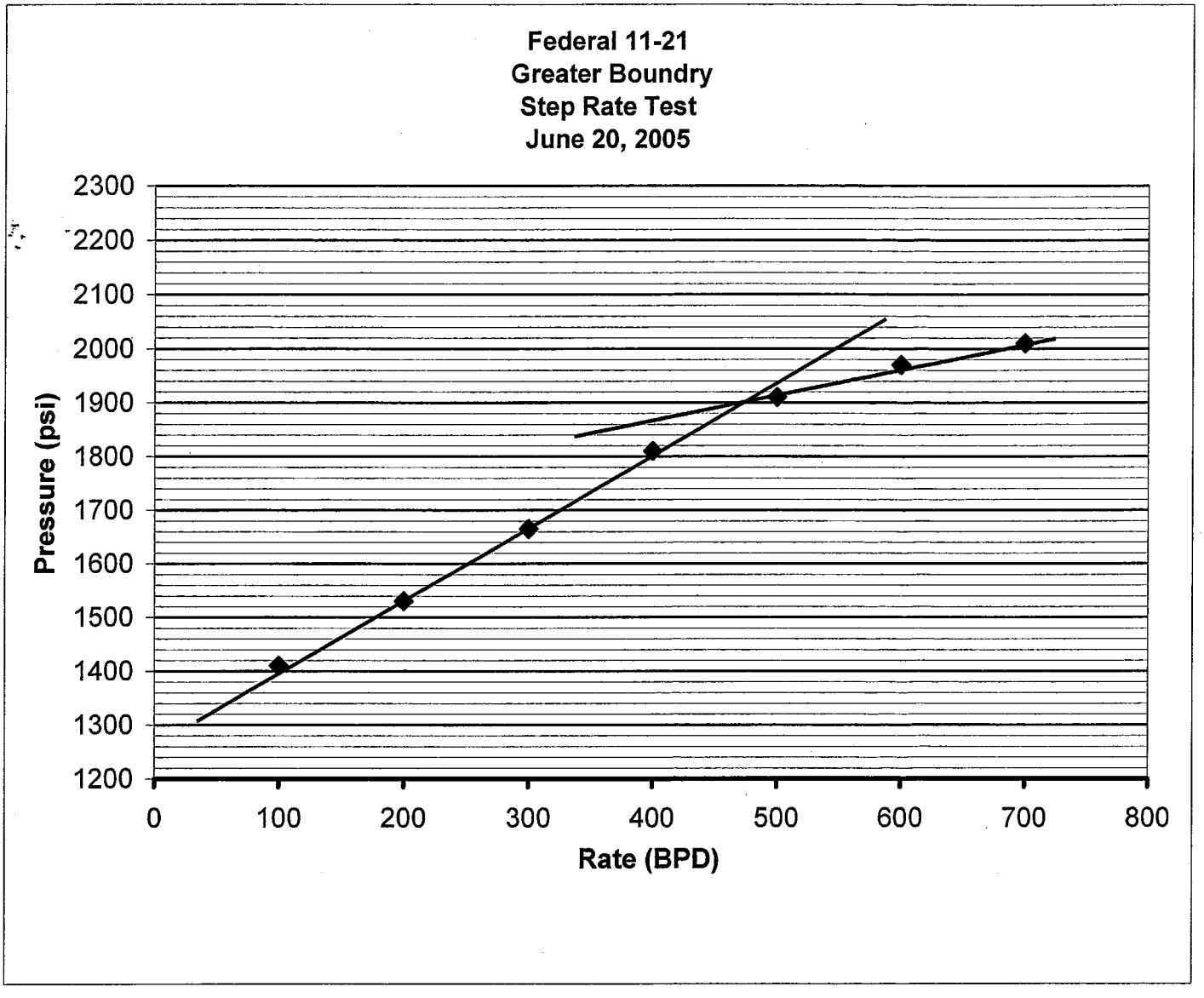

Start Pressure:	850	psi
Instantaneous Shut In Pressure (ISIP):	1925	psi
Top Perforation:	5417	feet
Fracture pressure (Pfp):	1910	psi
FG:	0.788	psi/ft

Step	Rate(bpd)	Pressure(psi)
1	100	1410
2	200	1530
3	300	1665
4	400	1810
5	500	1910
6	600	1970
7	700	2010

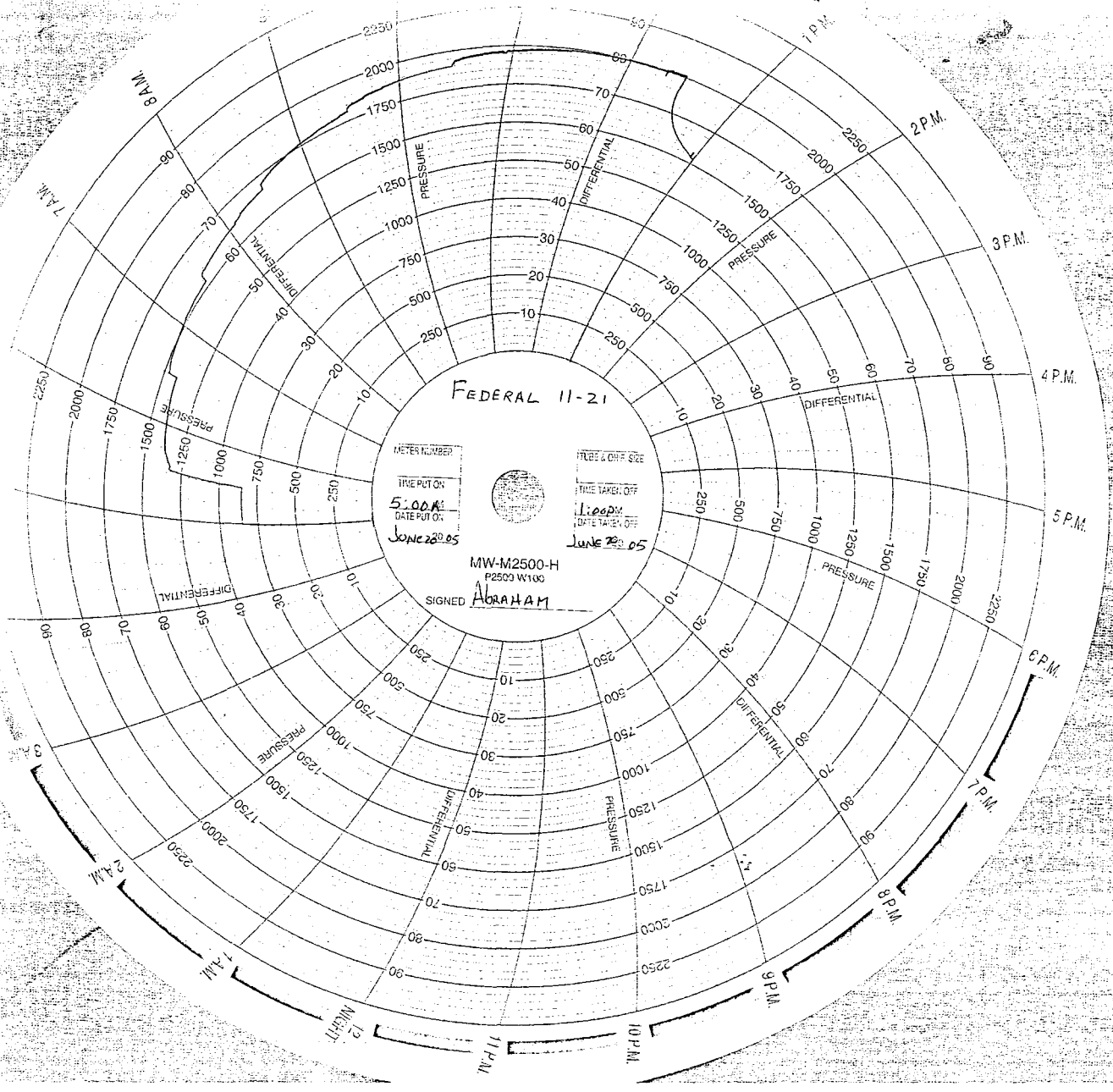
FEDERAL 11-21
METER NUMBER
TIME PUT ON
5:00AM
DATE PUT ON
JUNE 28 05
TUBE & ORIFICE SIZE
TIME TAKEN OFF
1:00PM
DATE TAKEN OFF
JUNE 29 05
MW-M2500-H
P2500 W100
SIGNED ABRAHAM
PRESSURE
DIFFERENTIAL
8 A.M.
7 A.M.
6 A.M.
5 A.M.
4 A.M.
3 A.M.
2 A.M.
1 A.M.
12 MIDNIGHT
11 P.M.
10 P.M.
9 P.M.
8 P.M.
7 P.M.
6 P.M.
5 P.M.
4 P.M.
3 P.M.
2 P.M.
1 P.M.

STATE OF UTAH
DEPARTMENT OF NATURAL RESOURCES
DIVISION OF OIL, GAS AND MINING

5. LEASE DESIGNATION AND SERIAL NUMBER: USA UTU-76954

SUNDRY NOTICES AND REPORTS ON WELLS

6. IF INDIAN, ALLOTTEE OR TRIBE NAME:

Do not use this form for proposals to drill new wells, significantly deepen existing wells below current bottom-hole depth, reenter plugged wells, or to drill horizontal laterals. Use APPLICATION FOR PERMIT TO DRILL form for such proposals.

7. UNIT or CA AGREEMENT NAME: GMBU

1. TYPE OF WELL: OIL WELL [X] GAS WELL [ ] OTHER

8. WELL NAME and NUMBER: BOUNDARY FED 11-21

2. NAME OF OPERATOR: NEWFIELD PRODUCTION COMPANY

9. API NUMBER: 4301330752

3. ADDRESS OF OPERATOR: Route 3 Box 3630 CITY Myton STATE UT ZIP 84052 PHONE NUMBER 435.646.3721

10. FIELD AND POOL, OR WILDCAT: MONUMENT BUTTE

4. LOCATION OF WELL:

FOOTAGES AT SURFACE: 1915 FSL 2076 FWL COUNTY: DUCHESNE

OTR/OTR. SECTION. TOWNSHIP. RANGE. MERIDIAN: NESW, 21, T8S, R17E STATE: UT

11. CHECK APPROPRIATE BOXES TO INDICATE NATURE OF NOTICE, REPORT, OR OTHER DATA

TYPE OF SUBMISSION	TYPE OF ACTION		
[ ] NOTICE OF INTENT (Submit in Duplicate)	[ ] ACIDIZE	[ ] DEEPEN	[ ] REPERFORATE CURRENT FORMATION
Approximate date work will	[ ] ALTER CASING	[ ] FRACTURE TREAT	[ ] SIDETRACK TO REPAIR WELL
	[ ] CASING REPAIR	[ ] NEW CONSTRUCTION	[ ] TEMPORARITLY ABANDON
	[ ] CHANGE TO PREVIOUS PLANS	[ ] OPERATOR CHANGE	[ ] TUBING REPAIR
	[ ] CHANGE TUBING	[ ] PLUG AND ABANDON	[ ] VENT OR FLAIR
[X] SUBSEQUENT REPORT (Submit Original Form Only)	[ ] CHANGE WELL NAME	[ ] PLUG BACK	[ ] WATER DISPOSAL
Date of Work Completion:	[ ] CHANGE WELL STATUS	[ ] PRODUCTION (START/STOP)	[ ] WATER SHUT-OFF
	[ ] COMMINGLE PRODUCING FORMATIONS	[ ] RECLAMATION OF WELL SITE	[X] OTHER: - Five Year MIT
03/01/2010	[ ] CONVERT WELL TYPE	[ ] RECOMPLETE - DIFFERENT FORMATION	

12. DESCRIBE PROPOSED OR COMPLETED OPERATIONS. Clearly show all pertinent details including dates, depths, volumes, etc.

On 02-08-10 Nathan Wiser with the EPA was contacted concerning the 5 year MIT on the above listed well. Permission was given at that time to perform the test on 02-08-10. On 03-01-10 the casing was pressured up to 1300 psig and charted for 30 minutes with no pressure loss. The well was not injecting during the test. The tubing pressure was 1705 psig during the test. There was not an EPA representative available to witness the test.

EPA# UT20702-04299 API# 43-013-30752

Accepted by the Utah Division of Oil, Gas and Mining
FOR RECORD ONLY

NAME (PLEASE PRINT) Lucy Chavez-Naupoto TITLE Administrative Assistant

SIGNATURE Lucy Chavez-Naupoto DATE 03/03/2010

(This space for State use only)

RECEIVED
MAR 08 2010
DIV. OF OIL, GAS & MINING

Mechanical Integrity Test
Casing or Annulus Pressure Mechanical Integrity Test

U.S. Environmental Protection Agency
Underground Injection Control Program
999 18th Street, Suite 500 Denver, CO 80202-2466

EPA Witness: _____ Date: 3 / 1 / 10
Test conducted by: Cole Harris
Others present: _____

Well Name: Boundry Federal 11-21-8-17 Type: ER SWD Status: AC TA UC
Field: Monument Butte
Location: NE/SW Sec: 21 T 8 N/(S) R 17 (E)/W County: Duchesne State: UT
Operator: Newfield
Last MIT: ___ / ___ / ___ Maximum Allowable Pressure: _____ PSIG

Is this a regularly scheduled test? [✓] Yes [ ] No
Initial test for permit? [ ] Yes [✓] No
Test after well rework? [ ] Yes [✓] No
Well injecting during test? [ ] Yes [✓] No If Yes, rate: _____ bpd

Pre-test casing/tubing annulus pressure: 0 psig

MIT DATA TABLE	Test #1	Test #2	Test #3
TUBING	*PRESSURE*		
Initial Pressure	1705 psig	psig	psig
End of test pressure	1705 psig	psig	psig
CASING / TUBING	*ANNULUS*	*PRESSURE*	
0 minutes	1300 psig	psig	psig
5 minutes	1300 psig	psig	psig
10 minutes	1300 psig	psig	psig
15 minutes	1300 psig	psig	psig
20 minutes	1300 psig	psig	psig
25 minutes	1300 psig	psig	psig
30 minutes	1300 psig	psig	psig
_____ minutes	psig	psig	psig
_____ minutes	psig	psig	psig
RESULT	[✓] Pass [ ]Fail	[ ] Pass [ ]Fail	[ ] Pass [ ]Fail

Does the annulus pressure build back up after the test ? [ ] Yes [✓] No

MECHANICAL INTEGRITY PRESSURE TEST

Additional comments for mechanical integrity pressure test, such as volume of fluid added to annulus and bled back at end of test, reason for failing test (casing head leak, tubing leak, other), etc.:

Signature of Witness: _____

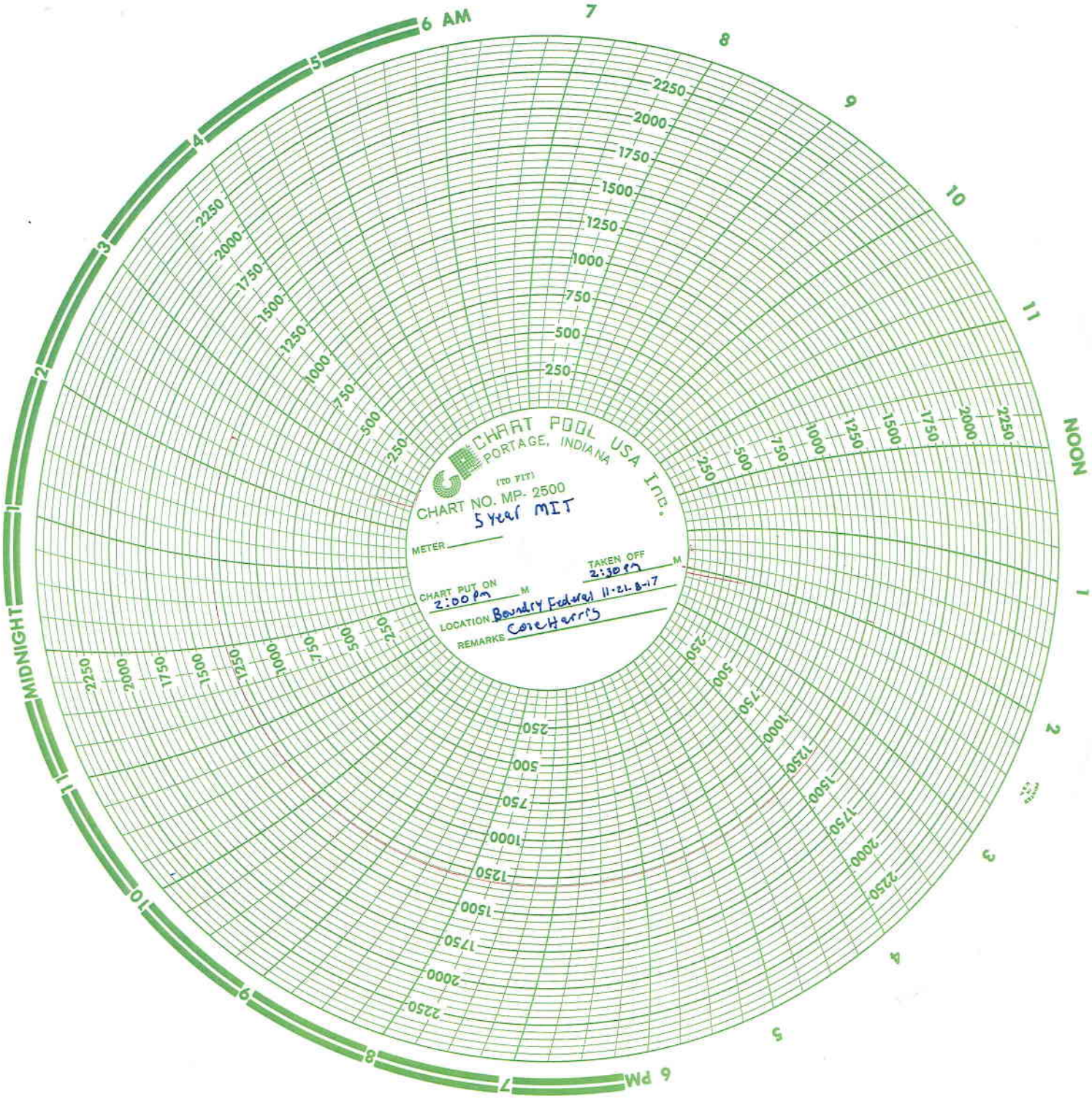
CHART POOL USA Inc.
PORTAGE, INDIANA
(TO FIT)
CHART NO. MP- 2500
5 year MIT
METER
CHART PUT ON
2:00 pm
M
TAKEN OFF
2:30 pm
M
LOCATION Boundry Federal 11-21-8-17
REMARKS Core Harris
6 AM
7
8
9
10
11
NOON
1
2
3
4
5
6 PM
7
8
9
10
11
MIDNIGHT
1
2
3
4
5
6
250
500
750
1000
1250
1500
1750
2000
2250

STATE OF UTAH
DEPARTMENT OF NATURAL RESOURCES
DIVISION OF OIL, GAS, AND MINING

FORM 9

5.LEASE DESIGNATION AND SERIAL NUMBER: UTU-50376

SUNDRY NOTICES AND REPORTS ON WELLS

Do not use this form for proposals to drill new wells, significantly deepen existing wells below current bottom-hole depth, reenter plugged wells, or to drill horizontal laterals. Use APPLICATION FOR PERMIT TO DRILL form for such proposals.

6. IF INDIAN, ALLOTTEE OR TRIBE NAME:

7.UNIT or CA AGREEMENT NAME: GMBU (GRRV)

1. TYPE OF WELL Water Injection Well

8. WELL NAME and NUMBER: BOUNDARY FED 11-21

2. NAME OF OPERATOR: NEWFIELD PRODUCTION COMPANY

9. API NUMBER: 43013307520000

3. ADDRESS OF OPERATOR: Rt 3 Box 3630 , Myton, UT, 84052

PHONE NUMBER: 435 646-4825 Ext

9. FIELD and POOL or WILDCAT: MONUMENT BUTTE

4. LOCATION OF WELL
FOOTAGES AT SURFACE: 1915 FSL 2076 FWL
QTR/QTR, SECTION, TOWNSHIP, RANGE, MERIDIAN: Qtr/Qtr: NESW Section: 21 Township: 08.0S Range: 17.0E Meridian: S

COUNTY: DUCHESNE

STATE: UTAH

11. CHECK APPROPRIATE BOXES TO INDICATE NATURE OF NOTICE, REPORT, OR OTHER DATA

TYPE OF SUBMISSION

- ☐ NOTICE OF INTENT — Approximate date work will start:
- ✓ SUBSEQUENT REPORT — Date of Work Completion: 2/4/2015
- ☐ SPUD REPORT — Date of Spud:
- ☐ DRILLING REPORT — Report Date:

TYPE OF ACTION

☐ ACIDIZE	☐ ALTER CASING	☐ CASING REPAIR
☐ CHANGE TO PREVIOUS PLANS	☐ CHANGE TUBING	☐ CHANGE WELL NAME
☐ CHANGE WELL STATUS	☐ COMMINGLE PRODUCING FORMATIONS	☐ CONVERT WELL TYPE
☐ DEEPEN	☐ FRACTURE TREAT	☐ NEW CONSTRUCTION
☐ OPERATOR CHANGE	☐ PLUG AND ABANDON	☐ PLUG BACK
☐ PRODUCTION START OR RESUME	☐ RECLAMATION OF WELL SITE	☐ RECOMPLETE DIFFERENT FORMATION
☐ REPERFORATE CURRENT FORMATION	☐ SIDETRACK TO REPAIR WELL	☐ TEMPORARY ABANDON
☐ TUBING REPAIR	☐ VENT OR FLARE	☐ WATER DISPOSAL
☐ WATER SHUTOFF	☐ SI TA STATUS EXTENSION	☐ APD EXTENSION
☐ WILDCAT WELL DETERMINATION	✓ OTHER	OTHER: 5 YR MIT

12. DESCRIBE PROPOSED OR COMPLETED OPERATIONS. Clearly show all pertinent details including dates, depths, volumes, etc.

5 YR MIT performed on the above listed well. On 02/04/2015 the casing was pressured up to 1127 psig and charted for 30 minutes with no pressure loss. The well was injecting during the test. The tbg pressure was 1338 psig during the test. There was not an EPA representative available to witness the test. EPA #UT22197-04299

Accepted by the Utah Division of Oil, Gas and Mining
FOR RECORD ONLY
February 05, 2015

NAME (PLEASE PRINT)	PHONE NUMBER	TITLE
Lucy Chavez-Naupoto	435 646-4874	Water Services Technician

SIGNATURE	DATE
N/A	2/5/2015

RECEIVED: Feb. 05, 2015

Mechanical Integrity Test
Casing or Annulus Pressure Mechanical Integrity Test

U.S. Environmental Protection Agency
Underground Injection Control Program
999 18th Street, Suite 500 Denver, CO 80202-2466

EPA Witness: _____ Date: 2 14 15
Test conducted by: Dale Giles
Others present: _____

Well Name: Boundary Fed. 11-21-817 Type: ER SWD Status: AC TA UC
Field: Monument Butte
Location: NE/SW Sec: 21 T 8 N/S R 17 E/W County: Duchesne State: Ut.
Operator: Newfield production co
Last MIT: / / Maximum Allowable Pressure: 1774 PSIG

Is this a regularly scheduled test? [X] Yes [ ] No
Initial test for permit? [ ] Yes [X] No
Test after well rework? [ ] Yes [X] No
Well injecting during test? [X] Yes [ ] No If Yes, rate: 2 bpd

Pre-test casing/tubing annulus pressure: 0 psig

MIT DATA TABLE	Test #1	Test #2	Test #3
TUBING	*PRESSURE*		
Initial Pressure	1338 psig	psig	psig
End of test pressure	1338 psig	psig	psig
CASING / TUBING	*ANNULUS*	*PRESSURE*	
0 minutes	1123 psig	psig	psig
5 minutes	1126 psig	psig	psig
10 minutes	1127 psig	psig	psig
15 minutes	1128 psig	psig	psig
20 minutes	1127 psig	psig	psig
25 minutes	1127 psig	psig	psig
30 minutes	1127 psig	psig	psig
_____ minutes	psig	psig	psig
_____ minutes	psig	psig	psig
RESULT	[X] Pass [ ] Fail	[ ] Pass [ ] Fail	[ ] Pass [ ] Fail

Does the annulus pressure build back up after the test ? [ ] Yes [X] No

MECHANICAL INTEGRITY PRESSURE TEST

Additional comments for mechanical integrity pressure test, such as volume of fluid added to annulus and bled back at end of test, reason for failing test (casing head leak, tubing leak, other), etc.:

_____

Signature of Witness: _____

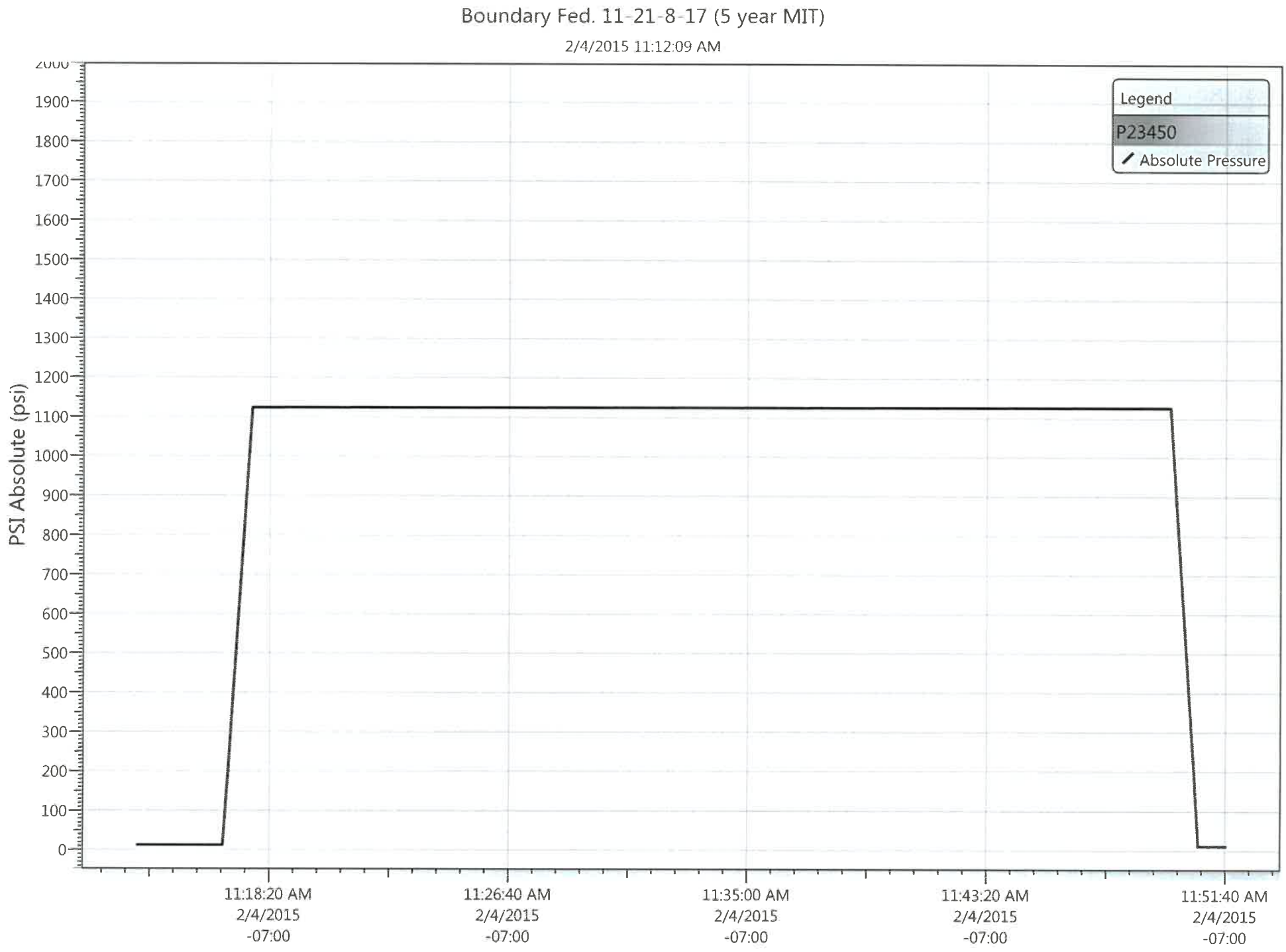
Boundary Fed. 11-21-8-17 (5 year MIT)
2/4/2015 11:12:09 AM
Legend
P23450
Absolute Pressure
PSI Absolute (psi)
2000
1900
1800
1700
1600
1500
1400
1300
1200
1100
1000
900
800
700
600
500
400
300
200
100
0
11:18:20 AM 2/4/2015 -07:00
11:26:40 AM 2/4/2015 -07:00
11:35:00 AM 2/4/2015 -07:00
11:43:20 AM 2/4/2015 -07:00
11:51:40 AM 2/4/2015 -07:00

NEWFIELD

Schematic

43-013-30752

Well Name: Boundary 11-21-8-17

Surface Legal Location	API/UWI	Well RC	Lease	State/Province	Field Name	County
21-8S-17E	43013307520000	500151680		Utah	GMBU CTB7	Duchesne

Spud Date	Rig Release Date	On Production Date	Original KB Elevation (ft)	Ground Elevation (ft)	Total Depth All (TVD) (ftKB)	PBTD (All) (ftKB)
		10/27/1983	5,252	5,240		Original Hole - 5,919.0

Most Recent Job

Job Category	Primary Job Type	Secondary Job Type	Job Start Date	Job End Date
Production / Workover	Clean-out	N/A	6/26/2014	6/26/2014

TD: 6,000.0 Vertical - Original Hole, 3/2/2016 1:36:06 PM

MD (ftKB)	TVD (ftKB)	Incl (°)	DLS	Vertical schematic (actual)
			DLS (°...	
11.5				
288.7				
289.4				1; Surface; 8 5/8 in; 8.097 in; 11-290 ftKB; 278.00 ft
299.9				
1,589.9				3-1; Tubing; 2 7/8; 2.441; 12-5,292; 5,280.22
4,795.6				
4,795.9				Perforated; 4,796-4,815; 2/22/1996
4,815.0				
4,815.6				
5,291.7				3-2; Pump Seating Nipple; 2 7/8; 2.441; 5,292-5,293; 1.10
5,293.0				3-3; Tubing; 2 7/8; 2.441; 5,293-5,325; 32.67
5,325.5				3-4; Packer; 4.89; 2.441; 5,325-5,330; 4.24
5,329.7				
5,417.0				Perforated; 5,417-5,424; 10/7/1983
5,423.9				
5,426.8				Perforated; 5,427-5,435; 10/7/1983
5,435.0				
5,919.0				
5,919.9				
5,968.2				
5,969.2				2; Production; 5 1/2 in; 4.892 in; 12-5,969 ftKB; 5,957.50 ft
6,000.0				

NEWFIELD

Newfield Wellbore Diagram Data
Boundary 11-21-8-17

Surface Legal Location		API/UWI	Lease
21-8S-17E		43013307520000	
County: Duchesne	State/Province: Utah	Basin	Field Name: GMBU CTB7
Well Start Date: 9/10/1983	Spud Date	Final Rig Release Date	On Production Date: 10/27/1983
Original KB Elevation (ft): 5,252 / Ground Elevation (ft): 5,240	Total Depth (ftKB): 6,000.0	Total Depth All (TVD) (ftKB)	PBTD (All) (ftKB): Original Hole - 5,919.0

Casing Strings

Csg Des	Run Date	OD (in)	ID (in)	Wt/Len (lb/ft)	Grade	Set Depth (ftKB)
Surface	9/8/1983	8 5/8	8.097	24.00	J-55	290
Production	9/24/1983	5 1/2	4.892	17.00	J-55	5,969

Cement

String: Surface, 290ftKB 9/8/1983

Cementing Company	Top Depth (ftKB)	Bottom Depth (ftKB)	Full Return?	Vol Cement Ret (bbl)
BJ Services Company	11.5	300.0		

Fluid Description	Fluid Type	Amount (sacks)	Class	Estimated Top (ftKB)
CEMENTED W/ 210 SX CLASS G + 2% CaCL + 1/4#/SK FLOCELE	Lead	210	G	11.5

String: Production, 5,969ftKB 9/24/1983

Cementing Company	Top Depth (ftKB)	Bottom Depth (ftKB)	Full Return?	Vol Cement Ret (bbl)
BJ Services Company	1,590.0	6,000.0		

Fluid Description	Fluid Type	Amount (sacks)	Class	Estimated Top (ftKB)
250 SX LODENSE	Lead	250	LODENSE	1,590.0
300 SX TRIXOTROPIC	Tail	300	THIXOTROPIC	3,795.0

String: Production, 5,969ftKB 3/3/1996

Cementing Company	Top Depth (ftKB)	Bottom Depth (ftKB)	Full Return?	Vol Cement Ret (bbl)
BJ Services Company	4,795.5	4,815.5		

Fluid Description	Fluid Type	Amount (sacks)	Class	Estimated Top (ftKB)
100 sks Premium plus w/2% CFR-3 .3% Halad 344 & 3% CaCl2. Mixed @ 16.2 PPG (yield 1.10 cu ft/sk) (total 19.5 bbls cmt slurry).	Squeeze	100	Premium Plus	4,795.5

Tubing Strings

Tubing Description	Run Date	Set Depth (ftKB)
Tubing	6/7/1996	5,329.7

Item Des	Jts	OD (in)	ID (in)	Wt (lb/ft)	Grade	Len (ft)	Top (ftKB)	Btm (ftKB)
Tubing	164	2 7/8	2.441	6.50	J-55	5,280.22	11.5	5,291.7
Pump Seating Nipple	1	2 7/8	2.441			1.10	5,291.7	5,292.8
Tubing	1	2 7/8	2.441	6.50	J-55	32.67	5,292.8	5,325.5
Packer	1	4.892	2.441			4.24	5,325.5	5,329.7

Rod Strings

Rod Description	Run Date	Set Depth (ftKB)

Item Des	Jts	OD (in)	Wt (lb/ft)	Grade	Len (ft)	Top (ftKB)	Btm (ftKB)

Perforation Intervals

Stage#	Zone	Top (ftKB)	Btm (ftKB)	Shot Dens (shots/ft)	Phasing (°)	Nom Hole Dia (in)	Date
2	GB4, Original Hole	4,796	4,815	4	90	0.500	2/22/1996
1	C, Original Hole	5,417	5,424	1	360		10/7/1983
1	C, Original Hole	5,427	5,435	1	360		10/7/1983

Stimulations & Treatments

Stage#	ISIP (psi)	Frac Gradient (psi/ft)	Max Rate (bbl/min)	Max PSI (psi)	Total Clean Vol (bbl)	Total Slurry Vol (bbl)	Vol Recov (bbl)
1			8.8	6,700			
2	2,200		26.9	2,840			

Proppant

Stage#	Total Prop Vol Pumped (lb)	Total Add Amount
1		
2		Proppant Bulk Sand 78200 lb