UTAH OIL AND GAS CONSERVATION COMMISSION

REMARKS: WELL LOG ____ ELECTRIC LOGS ✓ X WATER SANDS ____ LOCATION INSPECTED ____ SUB. REPORT abd ____

950816 fr Lomax to Inland / merger eff 6-18-95

DATE FILED: 11-19-82

LAND: FEE & PATENTED ____ STATE LEASE NO. ML-22060 PUBLIC LEASE NO. ____ INDIAN ____

DRILLING APPROVED: 11-19-82

SPUDDED IN: 12-12-82

COMPLETED: 2-6-83 P.O.W. PUT TO PRODUCING: 2-6-83

INITIAL PRODUCTION: 90 BOPD

GRAVITY A.P.I. 34

GOR: ____

PRODUCING ZONES: 4866-5420 Green River (GRRV)

TOTAL DEPTH: 5601

WELL ELEVATION: 5263

DATE ABANDONED: ____

FIELD: MONUMENT BUTTE

UNIT: ____

COUNTY: DUCHESNE

WELL NO. STATE # 5-32 API NO. 43-013-30714

LOCATION 1937 FT. FROM (N) (S) LINE, 559 FT. FROM (E) (W) LINE SW NW 1/4 — 1/4 SEC. 32

TWP.	RGE.	SEC.	OPERATOR	TWP.	RGE.	SEC.	OPERATOR
8S	17E	32	Inland Production Co.				

713-931-9276

Form OGC-1a

SUBMIT IN PLICATE*
(Other instructions on reverse side)

STATE OF UTAH
DEPARTMENT OF NATURAL RESOURCES
DIVISION OF OIL, GAS, AND MINING

APPLICATION FOR PERMIT TO DRILL, DEEPEN, OR PLUG BACK

5. Lease Designation and Serial No.: ML-22060

6. If Indian, Allottee or Tribe Name:

7. Unit Agreement Name:

8. Farm or Lease Name: State

9. Well No.: 5-32

10. Field and Pool, or Wildcat: Monument Butte

11. Sec., T., R., M., or Blk. and Survey or Area: Sec. 32, T8S, R17E

1a. Type of Work: DRILL [X] DEEPEN [ ] PLUG BACK [ ]

b. Type of Well: Oil Well [X] Gas Well [ ] Other Single Zone [ ] Multiple Zone [ ]

2. Name of Operator: Lomax Exploration Company

3. Address of Operator: P.O. Box 4503, Houston, TX 77210

4. Location of Well (Report location clearly and in accordance with any State requirements.*)
At surface: 559' FWL & 1937' FNL, SW/NW
At proposed prod. zone:

12. County or Parrish: Duchesne 13. State: Utah

14. Distance in miles and direction from nearest town or post office*: 10 miles South of Myton, Utah

15. Distance from proposed* location to nearest property or lease line, ft. (Also to nearest drlg. line, if any): 559

16. No. of acres in lease: 598.67

17. No. of acres assigned to this well: 40

18. Distance from proposed location* to nearest well, drilling, completed, or applied for, on this lease, ft.: 1780

19. Proposed depth: 5800

20. Rotary or cable tools: Rotary

21. Elevations (Show whether DF, RT, GR, etc.): 5263' GR

22. Approx. date work will start*: December, 1982

23. PROPOSED CASING AND CEMENTING PROGRAM

Size of Hole	Size of Casing	Weight per Foot	Setting Depth	Quantity of Cement
12 1/4	8 5/8	24	300	to surface
7 7/8	5 1/2	15.50	TD	600 sx

IN ABOVE SPACE DESCRIBE PROPOSED PROGRAM: If proposal is to deepen or plug back, give data on present productive zone and proposed new productive zone. If proposal is to drill or deepen directionally, give pertinent data on subsurface locations and measured and true vertical depths. Give blowout preventer program, if any.

24.

Signed: G. L. Pruitt Title: V.P. Drilling & Production Date: 11/12/82

(This space for Federal or State office use)

Permit No. ..... Approval Date .....

Approved by ..... Title ..... Date .....
Conditions of approval, if any:

APPROVED BY THE STATE
OF UTAH DIVISION OF
OIL, GAS, AND MINING
DATE: 11-19-82
BY: Norman C. Stout

*See Instructions On Reverse Side

T 8 S, R 17 E, S.L.B.& M.

PROJECT

LOMAX EXPLORATION CO.

Well location, *STATE #5-32*, located as shown in Lot 3 (SW 1/4 NW 1/4) Section 32, T8S, R17E, S.L.B.& M. Duchesne County, Utah.

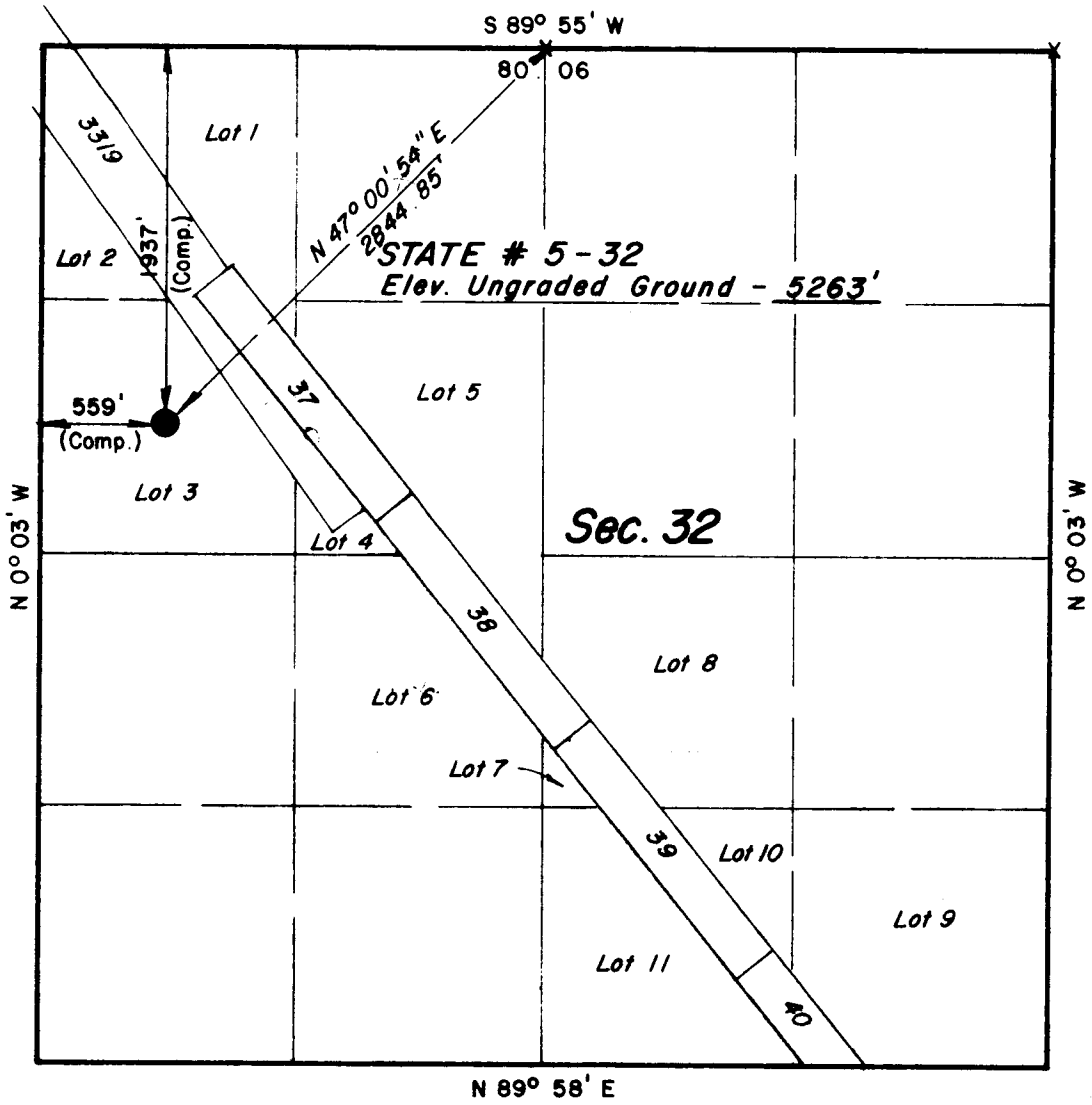

X = Section Corners Located

N

CERTIFICATE

THIS IS TO CERTIFY THAT THE ABOVE PLAT WAS PREPARED FROM FIELD NOTES OF ACTUAL SURVEYS MADE BY ME OR UNDER MY SUPERVISION AND THAT THE SAME ARE TRUE AND CORRECT TO THE BEST OF MY KNOWLEDGE AND BELIEF.

Lawrence R. Kay

REGISTERED LAND SURVEYOR
REGISTRATION № 3137
STATE OF UTAH

UINTAH ENGINEERING & LAND SURVEYING
P. O. BOX Q – 85 SOUTH - 200 EAST
VERNAL, UTAH - 84078

SCALE 1" = 1000'	DATE 11 / 9 / 82
PARTY R.K. J.F. B.F.W.	REFERENCES GLO Plat
WEATHER Cold & Wet	FILE LOMAX

OPERATOR LOMAX EXPLORATION CO DATE 11-19-82

WELL NAME STATE 5-32

SEC SW NW 32 T 8S R 17E COUNTY DUCHESNE

43-013-30714
API NUMBER

STATE
TYPE OF LEASE

POSTING CHECK OFF:

[ ]	INDEX	[✓]	HL	[ ]	
[ ]	NID	[✓]	PI	[ ]	
[ ]	MAP	[ ]		[ ]	

PROCESSING COMMENTS:
NO OIL WELLS WITHIN 1000'

AJF ✓

APPROVAL LETTER:

SPACING: [ ] A-3 _____ UNIT [ ] c-3-a _____ CAUSE NO. & DATE

[X] c-3-b [ ] c-3-c

SPECIAL LANGUAGE:

- [x] RECONCILE WELL NAME AND LOCATION ON APD AGAINST SAME DATA ON PLAT MAP.

- [x] AUTHENTICATE LEASE AND OPERATOR INFORMATION

- [x] VERIFY ADEQUATE AND PROPER BONDING STATE — as per Becbie 11-19-92

- [x] AUTHENTICATE IF SITE IS IN A NAMED FIELD, ETC.

- [x] APPLY SPACING CONSIDERATION

  - [ ] ORDER NO
  - [ ] UNIT NO
  - [x] c-3-b
  - [ ] c-3-c

- [x] OUTSTANDING OR OVERDUE REPORTS FOR OTHER WELLS OF THE OPERATOR.

November 19, 1982

Lomax Exploration Company
P. O. Box 4503
Houston, Texas 77210

RE: Well No. State 5-32
SWNW Sec. 32, T.8S, R.17E
Duchesne County, Utah

Gentlemen:

Insofar as this office is concerned, approval to drill the above referred to oil well is hereby granted in accordance with Rule C-3(b), General Rules and Regulations and Rules of Practice and Procedure.

Should you determine that it will be necessary to plug and abandon this well, you are hereby requested to immediately notify the following:

RONALD J. FIRTH - Engineer Office: 533-5771 Home: 571-6068	OR	CLEON B. FEIGHT - Director Office: 533-5771 Home: 466-4455

Enclosed please find Form OGC-8-X, which is to be completed whether or not water sands (acquifers) are encountered during drilling. Your cooperation in completing this form will be appreciated.

Further, it is requested that this Division be notified within 24 hours after drilling operations commence, and that the drilling contractor and rig number be identified.

The API number assigned to this well is 43-013-30714.

Sincerely,

R. J. Firth
Chief Petroleum Engineer

RJF/as
cc: State Lands
Enclosure

DIVISION OF OIL, GAS AND MINING

SPUDDING INFORMATION

NAME OF COMPANY: LOMAX EXPLORATION CO.

WELL NAME: State 5-32

SECTION SWNW 32 TOWNSHIP 8 S RANGE 17 E COUNTY Duchesne

DRILLING CONTRACTOR Westburne

RIG # 65

SPUDDED: DATE 12-12-82

TIME 11:30 AM

HOW Rotary

DRILLING WILL COMMENCE

REPORTED BY Michelle

TELEPHONE # 713-931-9276

DATE 12-14-82 SIGNED AS

2

Form OGC-1b

SUBMIT IN TRIPLICATE*
(Other instructions on reverse side)

STATE OF UTAH
DEPARTMENT OF NATURAL RESOURCES
DIVISION OF OIL, GAS, AND MINING

SUNDRY NOTICES AND REPORTS ON WELLS

(Do not use this form for proposals to drill or to deepen or plug back to a different reservoir. Use "APPLICATION FOR PERMIT—" for such proposals.)

5. LEASE DESIGNATION AND SERIAL NO.: ML-22060

6. IF INDIAN, ALLOTTEE OR TRIBE NAME:

1. OIL WELL [X] GAS WELL [ ] OTHER

7. UNIT AGREEMENT NAME:

2. NAME OF OPERATOR: Lomax Exploration Company

8. FARM OR LEASE NAME: State

3. ADDRESS OF OPERATOR: P.O. Box 4503, Houston, TX 77210

9. WELL NO.: 5-32

4. LOCATION OF WELL (Report location clearly and in accordance with any State requirements.* See also space 17 below.) At surface: 559 FWL, 1937 FNL

10. FIELD AND POOL, OR WILDCAT: Monument Butte

11. SEC., T., R., M., OR BLK. AND SURVEY OR AREA: Sec. 32, T8S, R17E

14. PERMIT NO.: 43-013-30714

15. ELEVATIONS (Show whether DF, RT, GR, etc.): 5263 Gr

12. COUNTY OR PARISH: Duchesne

13. STATE: Utah

DIVISION OF OIL, GAS & MINING

16. **Check Appropriate Box To Indicate Nature of Notice, Report, or Other Data**

NOTICE OF INTENTION TO:				SUBSEQUENT REPORT OF:			
TEST WATER SHUT-OFF	[ ]	PULL OR ALTER CASING	[ ]	WATER SHUT-OFF	[ ]	REPAIRING WELL	[ ]
FRACTURE TREAT	[ ]	MULTIPLE COMPLETE	[ ]	FRACTURE TREATMENT	[ ]	ALTERING CASING	[ ]
SHOOT OR ACIDIZE	[ ]	ABANDON*	[ ]	SHOOTING OR ACIDIZING	[ ]	ABANDONMENT*	[ ]
REPAIR WELL	[ ]	CHANGE PLANS	[ ]	(Other) Spud			[X]
(Other)			[ ]	(NOTE: Report results of multiple completion on Well Completion or Recompletion Report and Log form.)			

17. DESCRIBE PROPOSED OR COMPLETED OPERATIONS (Clearly state all pertinent details, and give pertinent dates, including estimated date of starting any proposed work. If well is directionally drilled, give subsurface locations and measured and true vertical depths for all markers and zones pertinent to this work.) *

12/06/82 Drilled 12 1/4" hole to 300' w/dry hole rig. Ran 284' 8 5/8" 23# casing. Landed @ 280'below ground level. Cemented w/210 sx class "G" + 2% CaCL + 1/4#/sx flocele. Cement returns to surface.

Spud w/Westburne rig #65 @ 11:30 A.M. 12/12/82.

18. I hereby certify that the foregoing is true and correct

SIGNED G.L. Pruitt TITLE V.P. Drlg. & Prod. DATE 12/21/82

(This space for Federal or State office use)

APPROVED BY _____ TITLE _____ DATE _____

CONDITIONS OF APPROVAL, IF ANY:

*See Instructions on Reverse Side

Form OGCC-3

STATE OF UTAH

OIL & GAS CONSERVATION COMMISSION

SUBMIT IN DUPLICATE* (See other instructions on reverse side)

3

5

WELL COMPLETION OR RECOMPLETION REPORT AND LOG*

1a. TYPE OF WELL: OIL WELL [X] GAS WELL [ ] DRY [ ] Other

b. TYPE OF COMPLETION: NEW WELL [X] WORK OVER [ ] DEEP-EN [ ] PLUG BACK [ ] DIFF. RESVR. [ ] Other

2. NAME OF OPERATOR: Lomax Exploration Company

3. ADDRESS OF OPERATOR: P.O. Box 4503, Houston, TX 77210

4. LOCATION OF WELL (*Report location clearly and in accordance with any State requirements*)*

At surface: 559' FWL & 1937' FNL SW/NW

At top prod. interval reported below

At total depth

5. LEASE DESIGNATION AND SERIAL NO.: ML-22060

6. IF INDIAN, ALLOTTEE OR TRIBE NAME

7. UNIT AGREEMENT NAME

8. FARM OR LEASE NAME: State

9. WELL NO.: 5-32

10. FIELD AND POOL, OR WILDCAT: Monument Butte

11. SEC., T., R., M., OR BLOCK AND SURVEY OR AREA: Section 32, T8S, R17E

14. PERMIT NO.: 43-013-30714 DATE ISSUED: 11/19/82

12. COUNTY OR PARISH: Duchesne 13. STATE: Utah

15. DATE SPUDDED	16. DATE T.D. REACHED	17. DATE COMPL. (*Ready to prod.*)	18. ELEVATIONS (DF, RKB, RT, GR, ETC.)*	19. ELEV. CASINGHEAD
12/12/82	12/19/82	2/06/83	5263' GR	5263

20. TOTAL DEPTH, MD & TVD	21. PLUG, BACK T.D., MD & TVD	22. IF MULTIPLE COMPL., HOW MANY*	23. INTERVALS DRILLED BY	ROTARY TOOLS	CABLE TOOLS
5601	5556	-	→	X	

24. PRODUCING INTERVAL(S), OF THIS COMPLETION—TOP, BOTTOM, NAME (MD AND TVD)*: 4866-5420 Green River

25. WAS DIRECTIONAL SURVEY MADE: No

26. TYPE ELECTRIC AND OTHER LOGS RUN: DLL, CNL-FDC

27. WAS WELL CORED: No

28. CASING RECORD (*Report all strings set in well*)

CASING SIZE	WEIGHT, LB./FT.	DEPTH SET (MD)	HOLE SIZE	CEMENTING RECORD	AMOUNT PULLED
8 5/8	23	284	12 1/4	210 sx class "G"	
5 1/2	17	5591 GR	7 7/8	280 sx Gypseal	

29. LINER RECORD

SIZE	TOP (MD)	BOTTOM (MD)	SACKS CEMENT*	SCREEN (MD)

30. TUBING RECORD

SIZE	DEPTH SET (MD)	PACKER SET (MD)
2 7/8	4982	

31. PERFORATION RECORD (*Interval, size and number*)

5414-20 (2 SPF)
5330-34 (1 SPF)
5338-46 (1 SPF)
4866-74 (4 shots)
4880-88 (9 shots)

32. ACID, SHOT, FRACTURE, CEMENT SQUEEZE, ETC.

DEPTH INTERVAL (MD)	AMOUNT AND KIND OF MATERIAL USED
5414-20	12,500 gal gelled KCl water & 17,500# 20/40 sand
5330-34 & 5338-46	24,500 gal gelled KCl water & 76,000# 20/40 sand (Continued on attached)

33.* PRODUCTION

DATE FIRST PRODUCTION	PRODUCTION METHOD (*Flowing, gas lift, pumping—size and type of pump*)	WELL STATUS (*Producing or shut-in*)
2/06/83	Pumping	Producing

DATE OF TEST	HOURS TESTED	CHOKE SIZE	PROD'N. FOR TEST PERIOD	OIL—BBL.	GAS—MCF.	WATER—BBL.	GAS-OIL RATIO
2/22/83	24	Open	→	90	NM	NM	NM

FLOW. TUBING PRESS.	CASING PRESSURE	CALCULATED 24-HOUR RATE	OIL—BBL.	GAS—MCF.	WATER—BBL.	OIL GRAVITY-API (CORR.)
0	0	→	90	NM	NM	34

34. DISPOSITION OF GAS (*Sold, used for fuel, vented, etc.*): Sold and used for fuel

TEST WITNESSED BY: Danny Fowler

35. LIST OF ATTACHMENTS

36. I hereby certify that the foregoing and attached information is complete and correct as determined from all available records

SIGNED G. L. Pruitt TITLE V.P. Drilling & Production DATE 2/23/83

*(See Instructions and Spaces for Additional Data on Reverse Side)

#32 Continued

Depth Interval	Amount and Kind of Material Used
4866-74 & 4880-88	24,500 gal gelled KCl water & 76,000# 20/40 sand

STATE OF UTAH
NATURAL RESOURCES & ENERGY
Oil, Gas & Mining

Scott M. Matheson, Governor
Temple A. Reynolds, Executive Director
Cleon B. Feight, Division Director

4241 State Office Building • Salt Lake City, UT 84114 • 801-533-5771

March 10, 1983

Lomax Exploration Company
P. O. Box 4503
Houston, Texas 77210

Re: See attached list of wells

Gentlemen:

Our records indicate that you have not filed the monthly drilling reports for the months indicated above on the subject wells.

Rule C-22, General Rules and Regulations and Rules of Practice and Procedure, requires that said reports be filed on or before the sixteenth (16) day of the succeeding month. This report may be filed on Form OGC-1B, (U.S. Geological Survey Form 9-331) "Sundry Notices and Reports on Wells", or on company forms containing substantially the same information. We are enclosing forms for your convenience.

We will be happy to acknowledge receipt of response to this notice if you will include an extra copy of the transmittal letter with a place for our signature, and a self addressed envelope for the return. Such acknowledgement should avoid unnecessary mailing of a firm second notice from our agency.

Your prompt attention to the above will be greatly appreciated.

Respectfully,

DIVISION OF OIL, GAS AND MINING

Cari Furse

Cari Furse
Well Records Specialist

CF/cf
Enclosure

Board/Charles R. Henderson, Chairman • John L. Bell • E. Steele McIntyre • Edward T. Beck
Robert R. Norman • Margaret R. Bird • Herm Olsen

an equal opportunity employer • please recycle paper

Well No. Federal # 3-33
Sec. 33, T. 8S, R. 16E.
Duchesne County, Utah
(December 1982- February 1983)

Well No. State # 5-32
Sec. 32, T. 8S, R. 17E.
Duchesne County, Utah
(January 1983- February 1983)

Well No. Federal # 2-20
Sec. 20, T. 7S, R. 21E.
Uintah County, Utah
(January 1983- February 1983)

Well No. Federal # 3-15
Sec. 15, T. 10S, R. 23E.
Uintah County, Utah
(January 1983- February 1983)

STATE OF UTAH
NATURAL RESOURCES
Oil, Gas & Mining

Scott M. Matheson, Governor
Temple A. Reynolds, Executive Director
Dr. G. A. (Jim) Shirazi, Division Director

4241 State Office Building • Salt Lake City, UT 84114 • 801-533-5771

July 21, 1983

Lomax Exploration Company
P. O. Box 4503
Houston, Texas 77210

Re: Well No. State # 5-32
Sec. 32, T. 8S, R. 17E.
Duchesne County, Utah

Well No. Federal # 2-17
Sec. 17, T. 6S, R. 20E.
Uintah County, Utah

Gentlemen:

According to our records, a "Well Completion Report" filed with this office February 23, 1983 & March 16, 1983, from above referred to wells, indicates the following electric logs were run: # 5-32: DLL, CNL-FDC; # 2-17: DLL-MSFL, CNL-FDC. As of todays date, this office has not received these logs.

Rule C-5, General Rules and Regulations and Rules of Practice and Procedure, requires that a well log shall be filed with the Commission together with a copy of the electric and radioactivity logs.

We will be happy to acknowledge receipt of your response to this notice if you will include an extra copy of the transmittal letter with a place for our signature, and a self addressed envelope for the return. Such acknowledgement should avoid unnecessary mailing of a second notice from our agency.

Your prompt attention to the above will be greatly appreciated.

Respectfully,

DIVISION OF OIL, GAS AND MINING

Cari Furse

Cari Furse
Well Records Specialist

CF/cf

LOMAX
EXPLORATION
COMPANY

July 29, 1983

State of Utah
Division of Oil and Gas
4241 State Office Building
Salt Lake City, Utah 84114

Federal #2-17
Section 17, T6S, R20E
Uintah County, Utah

Statae #5-32
Section 32, T8S, R17E
Duchesne County, Utah

Gentlemen:

Enclosed are copies of the logs you requested for the subject wells in your letter dated July 21, 1983.

Please advise if you need additional information.

Very truly yours,

Michele Tisdel

Michele Tisdel
Sec. Drilling & Production

MT
Enclosures (4)

AUG 03 1983
DIVISION OF
OIL, GAS & MINING

333 North Belt East • Suite 880
Houston, Texas 77090
(713) 931-9276
Mailing Address:
P.O. Box 4503
Houston, Texas 77210-4503

District Office:
248 North Union
Roosevelt, Utah 84066
Mailing Address:
P.O. Box 1446
Roosevelt, Utah 84066

Scott M. Matheson
Governor

James O. Mason, M.D., Dr.P.H.
Executive Director
Department of Health
801-533-6111

Kenneth L. Alkema
Director
Division of Environmental Health
801-533-6121

MEMBERS
Grant K. Borg, Chairman
W. Lynn Cottrell
Harold B. Lamb
Kenneth L. Alkema
Franklin N. Davis
Dale P. Bateman
Joseph A. Urbanik
C. Arthur Zeldin
Mrs. Lloyd G. Bliss

STATE OF UTAH
DEPARTMENT OF HEALTH
DIVISION OF ENVIRONMENTAL HEALTH
Utah Water Pollution Control Committee

150 West North Temple, P.O. Box 2500, Salt Lake City, Utah 84110-2500

Calvin K. Sudweeks
Executive Secretary
Rm 410 (801) 533-6146

March 21, 1985

Lomax Exploration Company
P. O. Box 4503
Houston, Texas 77210-4503

ATTENTION: Paul Curry,
Engineering Assistant

Gentlemen:

We acknowledge receipt of your letter dated May 30, 1984 notifying us of the location of the ponds for the wells described below and sources of produced water in accordance with Part VI, Utah Wastewater Disposal Regulations, Section 6.5.1.b. The regulations require that the disposal ponds...."shall be constructed such that no surface discharge or significant migration to subsurface will result."

As time and weather allows, a brief inspection of these ponds will be made by members of our staff during this next month. The wells are:

Well Number	Location Section	Township	Range	Average Quantity (BWPD) Produced Water
Monument Butte St. #1-2	2	9S	16E	0.5
Monument Butte St. #3-2	2	9S	16E	0.1
Gilsonite State #1-32	32	8S	17E	1.6
Gilsonite State #1A-32	32	8S	17E	1.1
Gilsonite State #2-32	32	8S	17E	0.1
Gilsonite State #4-32	32	8S	17E	0.3
Gilsonite State #5-32	32	8S	17E	0.2
Gilsonite State #6-32	32	8S	17E	4.0
Gilsonite State #7-32	32	8S	17E	1.3
Gilsonite State #9-32	32	8S	17E	0.1
Gilsonite State #11-32	32	8S	17E	0.4
Gilsonite State #12-32	32	8S	17E	0.3
Monument Butte St. #1-36	36	8S	16E	0.1
Monument Butte St. #5-36	36	8S	16E	0.1
Monument Butte St. #12-36	36	8S	16E	0.1
Monument Butte St. #13-36	36	8S	16E	0.9

If you have any questions regarding this matter, please contact us.

Sincerely,
UTAH WATER POLLUTION CONTROL COMMITTEE

Calvin K. Sudweeks
Executive Secretary

RECEIVED
MAR 22 1985
DIVISION OF OIL
GAS & MINING

BLN:pa
cc: Division of Oil, Gas and Mining
Uintah Basin District Health Department
BLM/Oil and Gas Operation - Vernal District
272-10

STATE OF UTAH
DIVISION OF OIL, GAS AND MINING

ENTITY ACTION FORM - FORM 6

OPERATOR LOMAX EXPLORATION COMPANY

ADDRESS (PAGE 2 OF 2)
KEBBIE/1-722-5103

OPERATOR ACCT. NO. N 0580

ACTION CODE	CURRENT ENTITY NO.	NEW ENTITY NO.	API NUMBER	WELL NAME	WELL LOCATION QQ	SC	TP	RG	COUNTY	SPUD DATE	EFFECTIVE DATE
D	9004	11486	43-013-30713	STATE 9-32	NESE	32	8S	17E	DUCHESNE	11-30-82	5-1-93
WELL 1 COMMENTS: *GILSONITE UNIT EFF 4-12-93, PER OPERATOR REQUEST MAKE ENTITY EFFECTIVE 5-1-93.											
D	9006	11486	43-013-30748	STATE 6-32	SENW	32	8S	17E	DUCHESNE	6-19-83	5-1-93
WELL 2 COMMENTS:											
D	9007	11486	43-013-30787	GILSONITE ST 12-32	NWSW	32	8S	17E	DUCHESNE	11-2-83	5-1-93
WELL 3 COMMENTS:											
D	9008	11486	43-013-30800	STATE 4-32	NWNW	32	8S	17E	DUCHESNE	10-7-83	5-1-93
WELL 4 COMMENTS:											
D	9009	11486	43-013-30714	STATE 5-32	SWNW	32	8S	17E	DUCHESNE	12-12-82	5-1-93
WELL 5 COMMENTS:											

ACTION CODES (See instructions on back of form)
- A - Establish new entity for new well (single well only)
- B - Add new well to existing entity (group or unit well)
- C - Re-assign well from one existing entity to another existing entity
- D - Re-assign well from one existing entity to a new entity
- E - Other (explain in comments section)

NOTE: Use COMMENT section to explain why each Action Code was selected.

(3/89)

L. CORDOVA (DOGM)
Signature

ADMIN. ANALYST
Title

6-16-93
Date

Phone No. ( )

FORM 10

STATE OF UTAH
DIVISION OF OIL, GAS AND MINING
355 West North Temple, 3 Triad, Suite 350, Salt Lake City, UT 84180-1203

MONTHLY OIL AND GAS PRODUCTION REPORT

OPERATOR NAME AND ADDRESS:

KEBBIE JONES
LOMAX EXPLORATION COMPANY
PO BOX 1446
ROOSEVELT UT 84066

UTAH ACCOUNT NUMBER: N0580

REPORT PERIOD (MONTH/YEAR): 6 / 95

AMENDED REPORT ☐ **(Highlight Changes)**

Well Name API Number	Entity	Location	Producing Zone	Well Status	Days Oper	Production Volumes OIL(BBL)	GAS(MCF)	WATER(BBL)
✓STATE 9-32 4301330713	11486	08S 17E 32	GRRV			ML22060		
✓STATE 5-32 4301330714	11486	08S 17E 32	GRRV			"		
✓STATE 6-32 4301330748	11486	08S 17E 32	GRRV			"		
✓STATE 4-32 4301330800	11486	08S 17E 32	GRRV			ML22060		
✓GILSONITE STATE 14-32 4301331480	11486	08S 17E 32	GRRV			ML22061		
✓BOUNDARY FEDERAL 12-21 4301331440	11709	08S 17E 21	GRRV			UTU50376	/U-50376	
✓NUMENT BUTTE FEDERAL 6-34 4301331504	11743	08S 16E 34	GRRV			U62848		
					TOTALS			

COMMENTS:

hereby certify that this report is true and complete to the best of my knowledge. Date:

ame and Signature: Telephone Number:

2/93)

Lomax Exploration Company
A subsidiary of Inland Resources Inc.

LOMAX

July 13, 1995

State of Utah Department of Natural Resources
Attention: Ms Becky Pritchet
355 W. North Temple
3 Triad Center, Suite 400
Salt Lake City, Utah 84180-1204

RE: **Corporate Name Change**

Dear Sir or Madame:

Effective July 1, 1995, Lomax Exploration Company will have taken the steps necessary to change its name to **Inland Production Company**. A Certificate issued by the Texas Secretary of State evidencing the name change is attached for your files. We have also attached to this letter those Utah State leases (Exhibit "B") and wells (Exhibit "A") affected by this name change. We have attempted to provide a complete list from the records we have. The intent is to include all leases and wells that Lomax Exploration Company operates or has an interest in.

Riders changing the Principal from Lomax Exploration Company to Inland Production Company under Nationwide Oil and Gas Bond # 4488944 for Lomax Exploration Company will be furnished to the State of Utah in the very near future.

Please amend your records by substituting Inland Production Company in place of Lomax Exploration Company on the leases and wells listed on the attached exhibits. In the future we will begin submitting notices and permits for new operations after July 1, 1995 in the name of Inland Production Company.

Should a fee be required or should you need further information or documents relating to our name change please contact the undersigned at your convenience at the following number: (303) 292-0900 or Cheryl Cameron at our Roosevelt, Utah office (801) 722-5103.

Sincerely yours,

Chris A Potter, CPL
Manager of Land

file:g\chris\cp4041a.doc

The State of Texas

Secretary of State

JUNE 30, 1995

MIKE PARSONS...GLAST,PHILLIPS & MURRAY
2200 ONE GALLERIA TWR,13355 NOEL RD.LB48
DALLAS ,TX 75240-6657

RE:
INLAND PRODUCTION COMPANY
CHARTER NUMBER 00415304-00

IT HAS BEEN OUR PLEASURE TO APPROVE AND PLACE ON RECORD YOUR ARTICLES OF AMENDMENT. A COPY OF THE INSTRUMENT FILED IN THIS OFFICE IS ATTACHED FOR YOUR RECORDS.

THIS LETTER WILL ACKNOWLEDGE PAYMENT OF THE FILING FEE.

IF WE CAN BE OF FURTHER SERVICE AT ANY TIME, PLEASE LET US KNOW.

VERY TRULY YOURS,

Antonio O. Garza, Jr., Secretary of State

The State of Texas

Secretary of State

CERTIFICATE OF AMENDMENT

FOR

INLAND PRODUCTION COMPANY

FORMERLY

LOMAX EXPLORATION COMPANY
CHARTER NUMBER 00415304

THE UNDERSIGNED, AS SECRETARY OF STATE OF THE STATE OF TEXAS, HEREBY CERTIFIES THAT THE ATTACHED ARTICLES OF AMENDMENT FOR THE ABOVE NAMED ENTITY HAVE BEEN RECEIVED IN THIS OFFICE AND ARE FOUND TO CONFORM TO LAW.

ACCORDINGLY THE UNDERSIGNED, AS SECRETARY OF STATE, AND BY VIRTUE OF THE AUTHORITY VESTED IN THE SECRETARY BY LAW, HEREBY ISSUES THIS CERTIFICATE OF AMENDMENT.

DATED JUNE 29, 1995

EFFECTIVE JUNE 29, 1995

Antonio O. Garza, Jr., Secretary of State

ARTICLES OF AMENDMENT
TO THE
ARTICLES OF INCORPORATION
OF
LOMAX EXPLORATION COMPANY

FILED
In the Office of the
Secretary of State of Texas

JUN 29 1995

Corporations Section

Pursuant to the provisions of Part Four of the Texas Business Corporation Act, the undersigned corporation adopts the following articles of amendment to its Articles of Incorporation:

1. Name. The name of the corporation is LOMAX EXPLORATION COMPANY.

2. Statement of Amendment. The amendment alters or changes Article One of the original Articles of Incorporation to read in full as follows:

"Article One. The name of the corporation is INLAND PRODUCTION COMPANY."

3. Shareholders. The number of shares of the corporation outstanding at the time of such adoption was 205,315, there being 107,546 Common Shares and 97,769 Non-voting Preferred Shares; and the number of shares entitled to vote thereon was 107,546.

4. Adoption by Shareholders. Only the holders of Common Shares of the corporation are entitled to vote on the amendment. The shareholders adopted the foregoing amendment by unanimous written consent dated June 23, 1995, pursuant to the provisions of Article 9.10 of the Texas Business Corporation Act and, therefore, no notice was required to be delivered under said Article 9.10.

5. Adoption by Board of Directors. The Board of Directors adopted said amendment by a consent in writing signed by all Directors.

6. Future Effective Date. This amendment will become effective on July 1, 1995, at 12:01 a.m.

EXECUTED June 26, 1995.

Kyle R. Miller, President

S:\CLIENT-N09004\10\LOMAX.AMD

Lomax Exploration Company
A subsidiary of Inland Resources Inc.

LOMAX

RECEIVED
JUL 14 1995
DIV. OF OIL, GAS & MINING

Announcing Our Name Change

From

Lomax Exploration Company

To

Inland Production Company

N5160 assigned 7/26/95. Lee

Field And Corporate Office Locations Remain The Same:

Corporate Office:
Inland Resources Inc.
475 Seventeenth Street, Suite 1500
Denver, CO 80202

Field Office:
W. Pole Line Road
P.O. Box 1446
Roosevelt, Utah 84066

475 Seventeenth Street • Suite 1500 • Denver, CO 80202 • 303-292-0900 • Fax 303-296-4070

United States Department of the Interior

BUREAU OF LAND MANAGEMENT
Utah State Office
P.O. Box 45155
Salt Lake City, Utah 84145-0155

RECEIVED
JUL 26 1995
DIV. OF OIL, GAS & MINING

JUL 25 1995

IN REPLY REFER TO:
3100
SL-065914 et al
(UT-923)

NOTICE

Inland Production Company	:	Oil and Gas Leases
475 Seventeenth St., Ste. 1500	:	SL-065914 et al
Denver, Colorado 80202	:	

Name Change Recognized

Acceptable evidence has been received in this office concerning the change of name of Lomax Exploration Company to Inland Production Company on Federal oil and gas leases.

The oil and gas lease files identified on the enclosed exhibit have been noted as to the name change. We are notifying the Minerals Management Service and all applicable Bureau of Land Management offices of the name change by a copy of this notice. If additional documentation for changes of operator are required by our Field Offices, you will be contacted by them.

For our purposes, the name change is recognized effective June 29, 1995 (Secretary of State's approval date).

Due to the name change, the name of the principal/obligor on the bond is required to be changed from Lomax Exploration Company to Inland Production Company on Bond No. 4488944 (BLM Bond No. UT0056). You may accomplish this name change either by consent of the surety on the original bond or by a rider to the original bond. Otherwise, a replacement bond with the new name should be furnished to this office. BLM Bond Nos. MT0771 and WY0821 should also be changed for the bonds held by Montana and Wyoming respectively.

/s/ ROBERT LOPEZ

Chief, Branch of Mineral
Leasing Adjudication

Enclosure
1-Exhibit (1 p)

cc: Hartford Accident & Indemnity Co.
Hartford Plaza
Hartford, CT 06115

bc: Moab District Office
Vernal District Office
Montana State Office
Wyoming State Office
Eastern States Office
MMS--Data Management Division, MS 3113, P.O. Box 5860, Denver, CO 80217
State of Utah, Attn: Lisha Cordova, Division of Oil, Gas & Mining,
355 West North Temple, 3 Triad Center, Suite 350, SLC, UT 84180
Teresa Thompson (UT-922)
Dianne Wright (UT-923)

EXHIBIT

SL-065914	U-36846	UTU-66185
SL-071572A	U-38428	UTU-67170
U-02458	U-45431	UTU-68548
U-15855	U-47171	UTU-69060
U-16535	U-50376	UTU-69061
U-26026	U-62848	UTU-72103
U-34173	UTU-65965	UTU-72104
U-36442	UTU-66184	UTU-73088

FAX COVER SHEET

Inland
RESOURCES INC.
475 17th Street, Suite 1500
Denver, CO 80202
303-292-0900, Fax #303-296-4070

DATE: August 8, 1995

TO: Lisha Cordova

COMPANY: State of Utah - Division of Oil, Gas and Mining

FAX NUMBER: 801 359 3940

FROM: Chris A Potter

NUMBER OF PAGES: 1 (INCLUDING COVER SHEET):

RE: Transfer of Authority to Inject
Lomax Exploration Company to Inland Production Company

I hope the info I sent to you August 1st was acceptable regarding our name change and your phone call to me last week.....

If there is anything missing or you need additional info, please let me know. I am located in our Denver office.....

Division of Oil, Gas and Mining
OPERATOR CHANGE WORKSHEET

Routing: (GIL)

1-LEC 7-PL
2-LWP 8-SJ
3-DTS 9-FILE
4-VLC
5-RJF
6-LWP

Attach all documentation received by the division regarding this change.
Initial each listed item when completed. Write N/A if item is not applicable.

XX Change of Operator (well sold) ☐ Designation of Agent
☐ Designation of Operator ☐ Operator Name Change Only

The operator of the well(s) listed below has changed (EFFECTIVE DATE: 6-29-95 (MERGER))

TO (new operator)	FROM (former operator)
INLAND PRODUCTION COMPANY	LOMAX EXPLORATION COMPANY
(address) PO BOX 1446	(address) PO BOX 1446
ROOSEVELT UT 84066	ROOSEVELT UT 84066
KEBBIE JONES	KEBBIE JONES
phone (801) 722-5103	phone (801) 722-5103
account no. N 5160	account no. N 0580

Well(s) (attach additional page if needed):

Name	API	Entity	Sec	Twp	Rng	Lease Type
SEE ATTACHED	013-30714					

OPERATOR CHANGE DOCUMENTATION

Lec 1. (Rule R615-8-10) Sundry or other legal documentation has been received from former operator (Attach to this form). (Rec'd 7-14-95)

N/A 2. (Rule R615-8-10) Sundry or other legal documentation has been received from new operator (Attach to this form).

Lec 3. The Department of Commerce has been contacted if the new operator above is not currently operating any wells in Utah. Is company registered with the state? (yes/no) ____ If yes, show company file number: _____. (7-28-95)

Lec 4. **(For Indian and Federal Wells ONLY)** The BLM has been contacted regarding this change (attach Telephone Documentation Form to this report). Make note of BLM status in comments section of this form. Management review of **Federal and Indian** well operator changes should take place prior to completion of steps 5 through 9 below.

Lec 5. Changes have been entered in the Oil and Gas Information System (Wang/IBM) for each well listed above. (7-31-95)

Lwp 6. Cardex file has been updated for each well listed above. 8-16-95

Lwp 7. Well file labels have been updated for each well listed above. 8-22-95

Lec 8. Changes have been included on the monthly "Operator, Address, and Account Changes" memo for distribution to State Lands and the Tax Commission. (7-31-95)

Lec 9. A folder has been set up for the Operator Change file, and a copy of this page has been placed there for reference during routing and processing of the original documents.

– OVER –

OPERATOR CHANGE WORKSHEET (CONTINUED) Initial each item when completed. Write N/A if item is not applicable.

ENTITY REVIEW

Yes 1. (Rule R615-8-7) Entity assignments have been reviewed for all wells listed above. Were entity changes made? (yes/no) ____ (If entity assignments were changed, attach copies of Form 6, Entity Action Form).

N/A 2. State Lands and the Tax Commission have been notified through normal procedures of entity changes.

BOND VERIFICATION (~~Fee wells only~~) Trust Lands Admin. / Rider or Repl. in Progress.

N/A/Yes 1. (Rule R615-3-1) The new operator of any fee lease well listed above has furnished a proper bond.

___ 2. A copy of this form has been placed in the new and former operators' bond files.

___ 3. The former operator has requested a release of liability from their bond (yes/no) ___. Today's date _____ 19___. If yes, division response was made by letter dated _____ 19___.

LEASE INTEREST OWNER NOTIFICATION RESPONSIBILITY

N/A 1. (Rule R615-2-10) The former operator/lessee of any **fee lease** well listed above has been notified by letter dated _____ 19___, of their responsibility to notify any person with an interest in such lease of the change of operator. Documentation of such notification has been requested.

OTS 2. Copies of documents have been sent to State Lands for changes involving **State leases.**
8/23/95 Sent to Ed Bonner

FILMING

✓ 1. All attachments to this form have been microfilmed. Date: August 30 19 95.

FILING

___ 1. Copies of all attachments to this form have been filed in each well file.

___ 2. The original of this form and the original attachments have been filed in the Operator Change file.

COMMENTS

950726 Blm/SL Aprv. eff. 6-29-95.

WE71/34-35

Speed Letter®

To Ed Bonner
~~State Lands~~ SCHOOL & INSTITUTIONAL TRUST LANDS ADMIN.

From Don Staley
Oil, Gas and Mining

Subject Operator Change

— No. 9 & 10 FOLD

MESSAGE

Date 8/23 19 95

Ed,

For your information, attached are copies of documents regarding an operator change on a state lease(s). These companies have complied with our requirements. Our records have been updated. Bonding should be reviewed by State Lands ASAP.

Former Operator: LOMAX EXPLORATION CO. (N 0580)

New Operator : INLAND PRODUCTION CO. (N 5160)

Well: API: Entity: S-T-R:

(SEE ATTACHED LIST)

— No. 9 FOLD

— No. 10 FOLD

CC: Operator File

Signed Don Staley

REPLY

Date 19

— No. 9 & 10 FOLD

Signed

Wilson Jones Company
GRAYLINE FORM 44-912 3-PART

RECIPIENT—RETAIN WHITE COPY, RETURN PINK COPY.

WELL NAME	API	ENTITY	LOCATION	LEASE
GILSONITE STATE 10-32	43-013-31485	99999	32-8S-17E	ML22061
GILSONITE STATE 8-32	43-013-31498	99999	32-8S-17E	ML22061
MONUMENT BUTTE STATE 16-2	43-013-31510	99999	2-9S-16E	ML21839
MONUMENT BUTTE STATE 8-2	43-013-31509	99999	2-9S-16E	ML21839
SUNDANCE STATE 5-32	43-047-32685	11781	32-8S-18E	ML22058
MONUMENT BUTTE STATE 14-36	43-013-31508	11774	36-8S-16E	ML22061
GILSONITE STATE 14I-32	43-013-31523	11788	32-8S-17E	ML21839
MONUMENT BUTTE STATE 16-36R	43-013-10159	99999	36-8S-16E	ML22061
STATE 5-36	43-013-30624	10835	36-8S-16E	ML22061
STATE 1-36	43-013-30592	10835	36-8S-16E	ML22061
12-32	43-013-30787	11486	32-8S-17E	ML22060
GILSONITE STATE 13-32	43-013-31403	99990	32-8S-17E	ML22060
GILSONITE STATE 7-32	43-013-30658	11486	32-8S-17E	ML22060
WELLS DRAW STATE 7-36	43-013-30934	09730	36-8S-15E	ML21835
STATE 1-2	43-013-30596	10835	2-9S-16E	ML21839
STATE 13-36	43-013-30623	10835	36-8S-16E	ML22061
STATE 3-2	43-013-30627	10835	2-9S-16E	ML21839
STATE 12-36	43-013-30746	10835	36-8S-16E	ML22061
STATE 1-32	43-013-30599	11486	32-8S-17E	ML22060
GILSONITE STATE 2-32	43-013-30604	11486	32-8S-17E	ML22060
STATE 11-32	43-013-30685	11486	32-8S-17E	ML22060
STATE 1A-32	43-013-30691	11486	32-8S-17E	ML22060
STATE 9-32	43-013-30713	11486	32-8S-17E	ML22060
STATE 5-32	43-013-30714	11486	32-8S-17E	ML22060
STATE 6-32	43-013-30748	11486	32-8S-17E	ML22060
STATE 4-32	43-013-30800	11486	32-8S-17E	ML22060
GILSONITE STATE 14-32	43-013-31480	11486	32-8S-17E	ML22061

Inland
RESOURCES INC.

April 24, 1998

RECEIVED
MAY 08 1998
DIV. OF OIL, GAS & MINING

Mr. Dan Jarvis
State of Utah
Division of Oil, Gas and Mining
P. O. Box 145801
Salt Lake City, Utah 84114-5801

RE: Permit Application for Water Injection Well
Gilsosnite State #5-32, Gilsonite Unit
Monument Butte Field, Lease #ML-22060
Section 32-Township 8S-Range 17E
Duchesne County, Utah

Dear Mr. Jarvis:

Inland Production Company herein requests approval to convert the Gilsonite State #5-32 from a producing oil well to a water injection well in the Monument Butte (Green River) Field, Gilsonite Unit.

I hope you find this application complete; however, if you have any questions or require additional information, please contact Debbie Knight at (303) 382-4434.

Sincerely,

John E. Dyer
Chief Operating Officer

410 Seventeenth Street, Suite 700, Denver, CO 80202 • 303-893-0102 • FAX 303-893-0103

RECEIVED
MAY 08 1998
DIV. OF OIL, GAS & MINING

INLAND PRODUCTION COMPANY

APPLICATION FOR APPROVAL OF CLASS II INJECTION WELL

GILSONITE STATE #5-32

MONUMENT BUTTE FIELD (GREEN RIVER) FIELD

GILSONITE UNIT

LEASE #ML-22060

APRIL 24, 1998

TABLE OF CONTENTS

LETTER OF INTENT	
COVER PAGE	
TABLE OF CONTENTS	
UIC FORM 1 – APPLICATION FOR INJECTION WELL	
WELLBORE DIAGRAM OF PROPOSED INJECTION	
WORK PROCEDURE FOR INJECTION CONVERSION	
COMPLETED RULE R615-5-1 QUESTIONNAIRE	
COMPLETED RULE R615-5-2 QUESTIONNAIRE	
ATTACHMENT A	ONE-HALF MILE RADIUS MAP
ATTACHMENT A-1	WELL LOCATION PLAT
ATTACHMENT B	LIST OF SURFACE OWNERS WITHIN ONE-HALF MILE RADIUS
ATTACHMENT C	CERTIFICATION FOR SURFACE OWNER NOTIFICATION
ATTACHMENT E	WELLBORE DIAGRAM – GILSONITE STATE #5-32
ATTACHMENT E-1	WELLBORE DIAGRAM – GILSONITE STATE #1-32
ATTACHMENT E-2	WELLBORE DIAGRAM – GILSONITE STATE #4-32
ATTACHMENT E-3	WELLBORE DIAGRAM – GILSONITE STATE #6-32
ATTACHMENT E-4	WELLBORE DIAGRAM – GILSONITE STATE #11-32
ATTACHMENT E-5	WELLBORE DIAGRAM – GILSONITE STATE #12-32
ATTACHMENT E-6	WELLBORE DIAGRAM – TAR SANDS FEDERAL #1-31
ATTACHMENT E-7	WELLBORE DIAGRAM – TAR SANDS FEDERAL #7-31
ATTACHMENT E-8	WELLBORE DIAGRAM – TAR SANDS FEDERAL #8-31
ATTACHMENT E-9	WELLBORE DIAGRAM – TAR SANDS FEDERAL #9-31
ATTACHMENT E-10	WELLBORE DIAGRAM – TAR SANDS FEDERAL #13-29
ATTACHMENT F	WATER ANALYSIS OF THE FLUID TO BE INJECTED
ATTACHMENT F-1	WATER ANALYSIS OF THE FLUID IN THE FORMATION
ATTACHMENT F-2	WATER ANALYSIS OF THE COMPATIBILITY OF THE FLUIDS
ATTACHMENT G	FRACTURE GRADIENT CALCULATIONS
ATTACHMENT G-1	FRACTURE REPORT DATED 1-1-83
ATTACHMENT G-2	FRACTURE REPORT DATED 1-7-83
ATTACHMENT G-3	FRACTURE REPORT DATED 1-13-83
ATTACHMENT G-4	FRACTURE REPORT DATED 12-21-95
ATTACHMENT G-5	FRACTURE REPORT DATED 12-23-95
ATTACHMENT G-6	FRACTURE REPORT DATED 12-27-95
ATTACHMENT H	WORK PROCEDURE FOR PROPOSED PLUGGING AND ABANDONMENT
ATTACHMENT H-1	WELLBORE DIAGRAM OF PROPOSED PLUGGED WELL

STATE OF UTAH
DIVISION OF OIL, GAS AND MINING

APPLICATION FOR INJECTION WELL - UIC FORM 1

RECEIVED
MAY 08 1998
DIV. OF OIL, GAS & MINING

OPERATOR Inland Production Company
ADDRESS 410 17th Street, Suite 700
Denver, Colorado 80202

Well Name and number: Gilsonite State #5-32
Field or Unit name: Monument Butte (Green River) Gilsonite Unit Lease No. ML-22060
Well Location: QQ SWNW section 32 township 8S range 17E county Duchesne

Is this application for expansion of an existing project? . . . . . Yes [X] No [ ]

Will the proposed well be used for: Enhanced Recovery? . . . . . Yes [X] No [ ]
Disposal? . . . . . Yes [ ] No [X]
Storage? . . . . . Yes [ ] No [X]

Is this application for a new well to be drilled? . . . . . Yes [ ] No [X]
If this application is for an existing well,
has a casing test been performed on the well?. . . . . Yes [X] No [ ]
Date of test: 12/19/95
API number: 43-013-30714

Proposed injection interval: from 4866' to 5842'
Proposed maximum injection: rate 500 bpd pressure 1671 psig
Proposed injection zone contains [X] oil, [ ] gas, and/or [ ] fresh water within 1/2 mile of the well.

IMPORTANT: Additional information as required by R615-5-2 should accompany this form.

List of Attachments: Exhibits "A" through "G"

I certify that this report is true and complete to the best of my knowledge.

Name: John E. Dyer Signature
Title Chief Operating Officer Date 4/24/98
Phone No. (303) 292-0900

(State use only)
Application approved by Title
Approval Date

Comments:

Gilsonite State #5-32

Proposed Injection
Wellbore Diagram

Well History:

12-12-82	Spud Well
12-30-82	Perf: 5,414'-5,420'
1-1-83	Frac LDC zone as follows: Totals 12,500 gal, 17,500# 20/40 sd Avg TP 3,700 @ 25 BPM
1-6-83	Perf: 5,330'-5,334', 5,338'-5,346'
1-7-83	Frac A-1 zone as follows: Totals 24,500 gal, 76,000# 20/40 sd Max TP 4,000 @ 30 BPM Avg TP 2,600 @ 30 BPM ISIP 2,000
1-12-83	Perf: 4,866'-4,874', 4,880'-4,888'
1-13-83	Frac D-1 zone as follows: Totals 24,500 gal, 76,000# 20/40 sd Max TP 3,150 @ 30 BPM Avg TP 2,500 @ 31 BPM ISIP 2,200
12-20-95	Perf: 5832'-5842' w/4 JSPF
12-21-95	Frac w/63,400# 20/40 sd in 564 bbls Boragel @ avg rate of 22 BPM, 1900 psi. ISIP-2020 psi, 5 min 1871 psi.
12-22-95	Perf: 5320'-5347 w/4 JSPF
12-23-95	Frac w/87,500# 20/40 sd in 637 bbls Boragel @ avg rate of 30 BPM, 1420 psi. ISIP-1793, 5 min 1216psi.
12-24-95	Perf: 5143'-5160' w/4 JSPF
12-27-95	Frac w/78,000# 20/40 sd in 551 bbls Boragel @ avg ratae of 26 BPM, 1650 psi. ISIP-1668, 5 min 1561 psi.

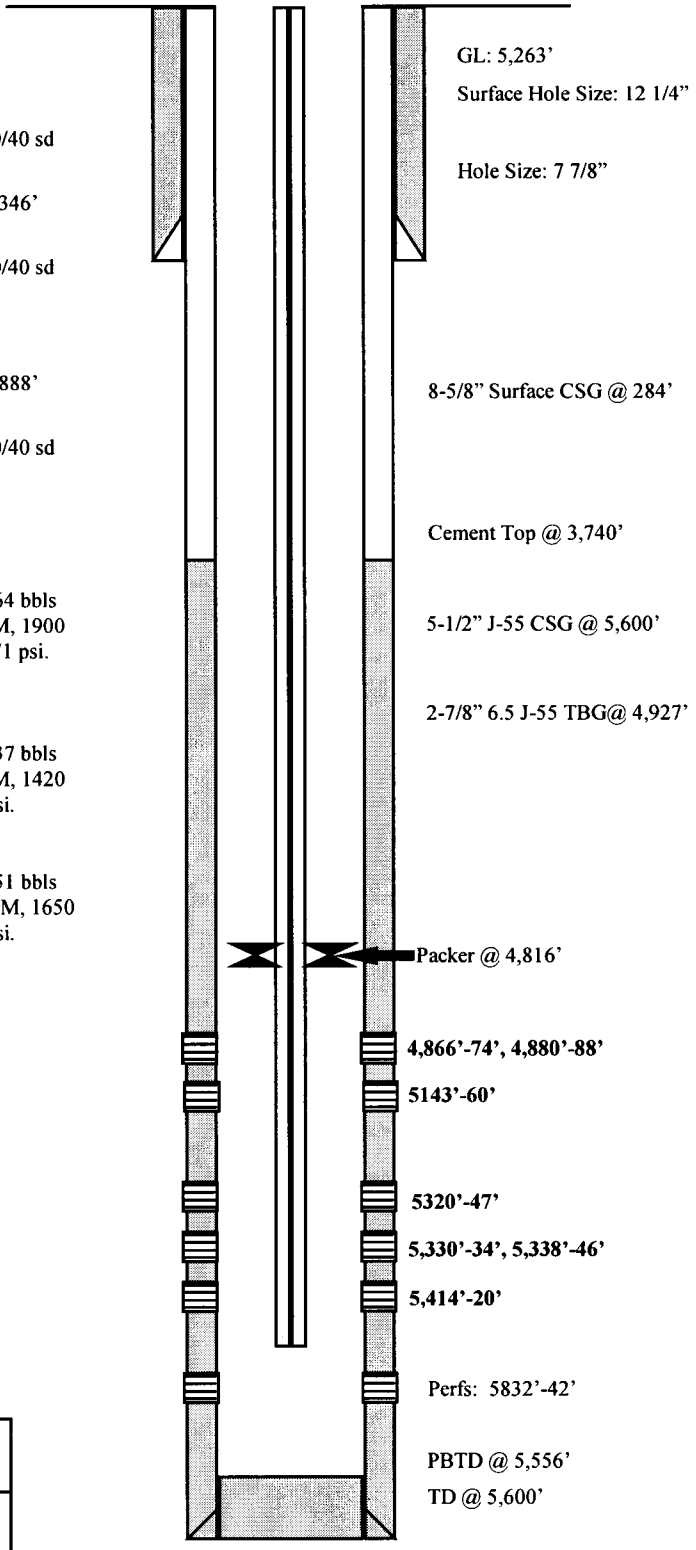

Inland Resources Inc.

Gilsonite State #5-32

559 FWL 1937 FNL

SWNW Section 32-T8S-R17E

Duchesne Co, Utah

API #43-013-30714; Lease #ML-22060

WORK PROCEDURE FOR INJECTION CONVERSION

1. **Rig up hot oil truck to casing. Pump water. Unseat pump. Flush rods. Trip out of hole with rods and pump.**

2. **Trip out of hole with tubing, breaking and doping every connection. Trip in hole with packer and tubing. Rig up water truck to casing. Pump packer fluid. Set packer.**

3. **Test casing and packer.**

4. **Rig down, move out.**

REQUIREMENTS FOR INJECTION OF FLUIDS INTO RESERVOIRS
RULE R615-5-1

1. **Operations to increase ultimate recovery, such as cycling of gas, the maintenance of pressure, the introduction of gas, water or other substances into a reservoir for the purpose of secondary or other enhanced recovery or for storage and the injection of water into any formation for the purpose of water disposal shall be permitted only by order of the Board after notice and hearing.**

2. **A request for agency action for authority for the injection of gas, liquified petroleum gas, air, water or any other medium into any formation for any reason, including but not necessarily limited to the establishment of or the expansion of waterflood projects, enhanced recovery projects, and pressure maintenance projects shall contain:**

   2.1 **The name and address of the operator of the project.**

   Inland Production Company
   410 17th Street, Suite 700
   Denver, Colorado 80202

   2.2 **A plat showing the area involved and identifying all wells, including all proposed injection wells, in the project area and within one-half mile of the project area.**

   See Attachment A

   2.3 **A full description of the particular operation for approval is requested.**

   Approval is requested to convert the Gilsonite State #5-32 from a producing oil well to a water injection well in the Monument Butte (Green River) Field, Gilsonite Unit.

   A description of the pools from which the identified wells are producing or have produced.

   The proposed injection well will inject into the Green River Formation.

   2.4 **The names, description and depth of the pool or pools to be affected.**

   The injection zone is in the Douglas Creek Member of the Green River Formation. At the Gilsonite State #5-32 well, the proposed injection zone is from 4866'-5842'. The confining stratum directly above and below the injection zone is the Douglas Creek Member of the Green River Formation, with the Douglas Creek Marker top at 4866'.

   2.5 **A copy of a log of a representative well completed in the pool.**

   The referenced log for the Gilsonite State #5-32 is on file with the Utah Division of Oil, Gas and Mining.

2.6 A statement as to the type of fluid to be used for injection, its source and the estimated amounts to be injected daily.

The type and source of fluid to be used for injection will be culinary water from the Johnson Water District supply line. The average estimated injection of fluids will be at a rate of 300 BPD, and the estimated maximum injection will be at a rate of 500 BPD.

2.7 A list of all operators and surface owners within one-half mile radius of the proposed project.

See Attachment B.

2.8 An affidavit certifying that said operators or owners and surface owners within a one-half mile radius have been provided a copy of the petition for injection.

See Attachment C.

2.9 Any additional information the Board may determine is necessary to adequately review the petition.

Inland Production Company will supply any additional information requested by the Utah Division of Oil, Gas and Mining.

4.0 Establish recovery projects may be expanded and additional wells placed on injection only upon authority from the Board after notice and hearing or by administrative approval.

This proposed injection well is on a State lease (Lease #ML-22060), in the Monument Butte (Green River) Field, Gilsonite Unit, and this request is for administrative approval.

REQUIREMENTS FOR CLASS II INJECTION WELLS INCLUDING WATER DISPOSAL, STORAGE AND ENHANCED RECOVERY WELLS
SECTION V – RULE R615-5-2

1. **Injection well shall be completed, equipped, operated, and maintained in a manner that will prevent pollution and damage to any USDW, or other resources and will confine injected fluids to the interval approved.**

2. **The application for an injection well shall include a properly completed Form DOGM-UIC-1 and the following:**

   2.1 **A plat showing the location of the injection well, all abandoned or active wells within a one-half mile radius of the proposed wells, and the surface owner and the operator of any lands or producing leases, respectively, within a one-half mile radius of the proposed injection well.**

   See Attachment A and B.

   2.2 **Copies of electrical or radioactive logs, including gamma ray logs, for the proposed well run prior to the installation of casing and indicating resistivity, spontaneous potential, caliper and porosity.**

   All logs are on file with the Utah Division of Oil, Gas and Mining.

   2.3 **A copy of a cement bond or comparable log run for the proposed injection well after casing was set and cemented.**

   A copy of the cement bond log is on file with the Utah Division of Oil, Gas and Mining.

   2.4 **Copies of logs already on file with the Division should be referenced, but need not be refiled.**

   All copies of logs are on file with the Utah Division of Oil, Gas and Mining.

   2.5 **A description of the casing or proposed casing program of the injection well and of the proposed method for testing the casing before use of the well.**

   The casing program is 8-5/8", 24#, J-55 surface casing run to 284' GL, and the 5-1/2" casing run from surface to 5591' KB. A casing integrity test will be conducted at the time of conversion. See Attachment E.

   2.6 **A statement as to the type of fluid to be used for injection, its source and estimated amounts to be injected daily.**

   The type and source of fluid to be injected is culinary water from the Johnson Water District supply line. The estimated average rate of injection will be 300 BPD, and the estimated maximum rate of injection will be 500 BPD.

   2.7 **Standard laboratory analysis of the fluid to be injected, the fluid in the formation into which the fluid is being injected, and the compatibility of the fluids.**

   See Attachment F, F-1, and F-2.

2.8 The proposed average and maximum injection pressures.

The proposed average injection pressure will be approximately 1100 psig and the maximum injection pressure will not exceed 1671 psig.

2.9 Evidence and data to support a finding that the proposed injection well will not initiate fractures through the overlying strata or a confining interval that could enable the injected fluid or formation fluid to enter the fresh water strata.

The fracture gradient for the Gilsonite State #5-32, for proposed zones (4866' – 5842') calculates at .76 psig/ft. The maximum injection pressures will be limited so as not to exceed this gradient. A step rate test will be performed periodically to ensure we are below parting pressure. The proposed maximum injection pressure is 1671 psig. See Attachment G through G-6.

2.10 Appropriate geological data on the injection interval and confining beds, including the geologic name, lithologic description, thickness, depth, and lateral extent.

In the Gilsonite State #5-32, the injection zone (4866'-5842') is in the Douglas Creek member of the Green River Formation. The reservoir is a very fine-grained sandstone with minor imbedded shale streaks. The estimated porosity is 13%. The Douglas Creek member is composed of porous and permeable lenticular calcareous sandstone and low porosity carbonates and calcareous shale. The porous and lenticular sandstone varies in thickness from 0-31', and is confined to the Monument Butte Field. Outside the Monument Butte Field, the sandstone is composed of tight, very fine, silty, calcareous sandstone, less than 3' thick. The stratum confining the injection zone is composed of tight, moderately calcareous, sandy lacustrine shale. All of the confining strata are impermeable, and will effectively seal off the oil, gas, and water of the injection zone from any strata directly above or below it.

2.11 A review of the mechanical condition of each well within a one-half mile radius of the proposed injection well to assure that no conduit exists that could enable fluids to migrate up or down the wellbore and enter the improper intervals.

See Attachments E through E-10.

Additionally, the injection system will be equipped with high and low pressure shut down devices that will automatically shut in injection waters if a system blockage or leakage occurs. One way check valves will also ensure proper flow management. Relief valves will also be utilized for high-pressure relief.

2.12 An affidavit certifying that a copy of the application has been provided to all operators or owners, and surface owners within a one-half mile radius of the proposed injection well.

See Attachment C.

2.13 Any other information that the Board or Division may determine is necessary to adequately review the application.

Inland Production Company will supply any requested information to the Board or Division.

Attachment A

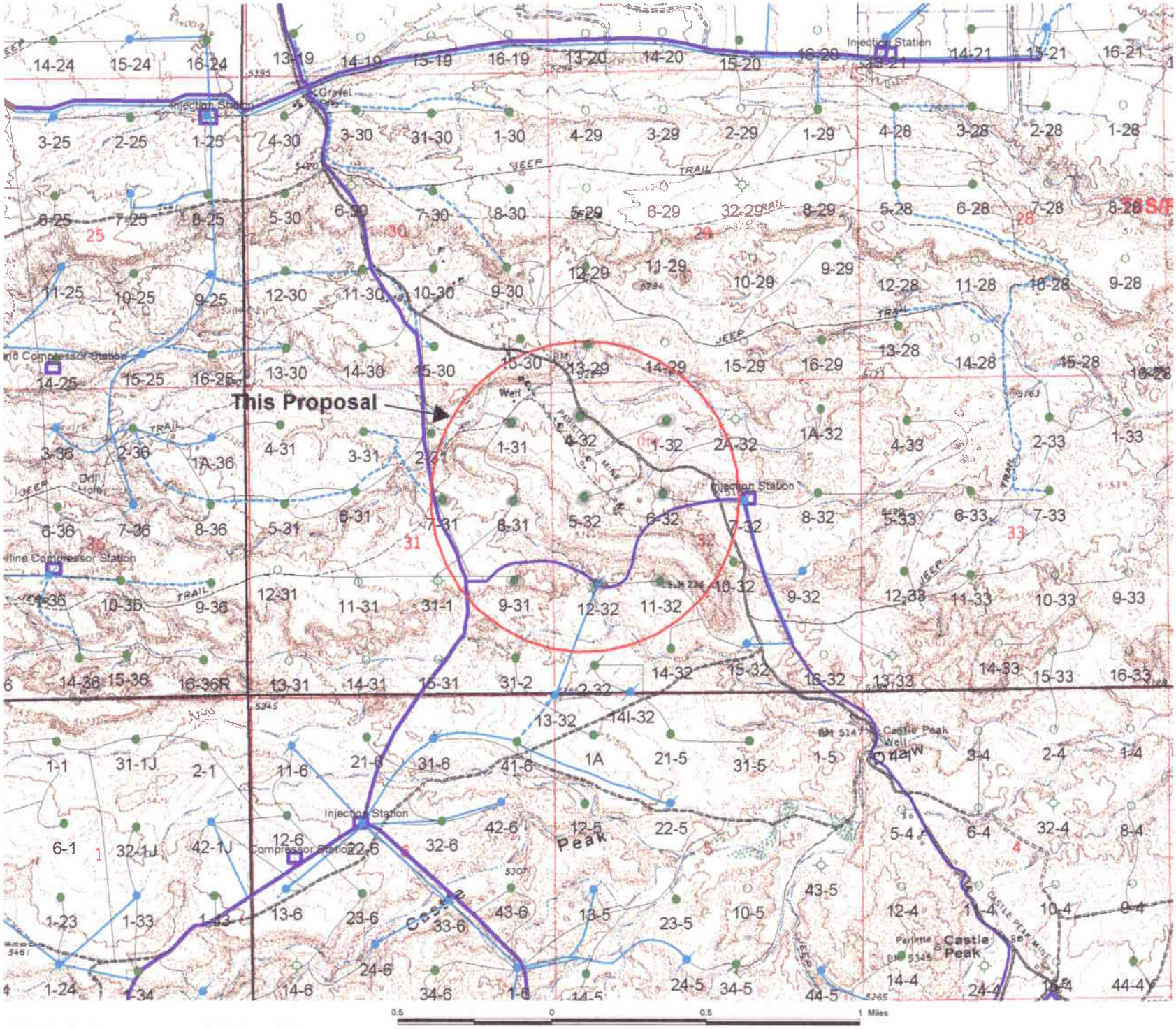

T 8 S, R 17 E, S.L.B.& M.

PROJECT

LOMAX EXPLORATION CO.

Well location, *STATE #5-32*, located as shown in Lot 3 (SW 1/4 NW 1/4) Section 32, T8S, R17E, S.L.B.& M. Duchesne County, Utah.

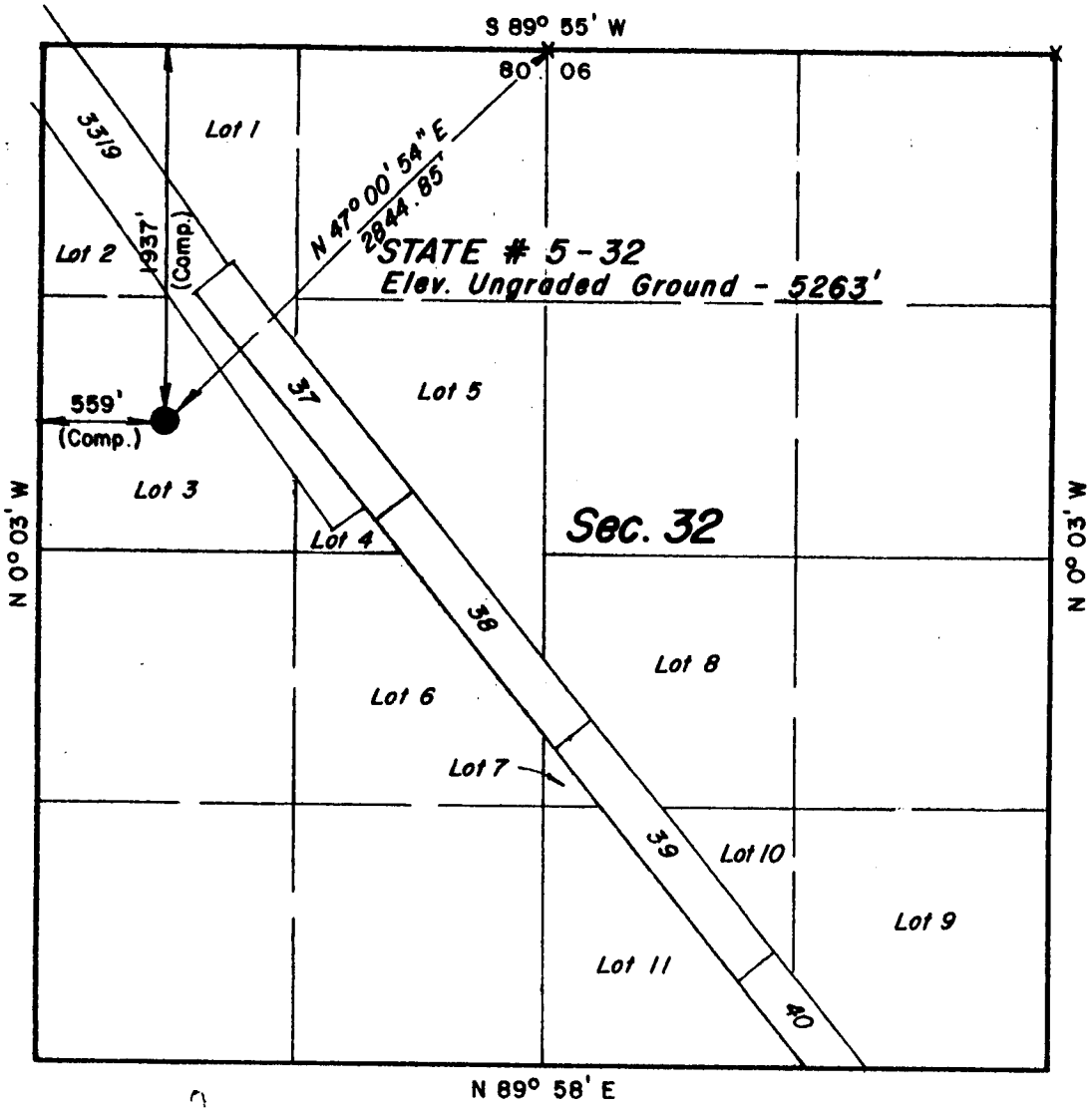

X = Section Corners Located

CERTIFICATE

THIS IS TO CERTIFY THAT THE ABOVE PLAT WAS PREPARED FROM FIELD NOTES OF ACTUAL SURVEYS MADE BY ME OR UNDER MY SUPERVISION AND THAT THE SAME ARE TRUE AND CORRECT TO THE BEST OF MY KNOWLEDGE AND BELIEF.

Lawrence Kay

REGISTERED LAND SURVEYOR
REGISTRATION Nº 3137
STATE OF UTAH

UINTAH ENGINEERING & LAND SURVEYING
P. O. BOX Q ~ 85 SOUTH - 200 EAST
VERNAL, UTAH - 84078

SCALE 1" = 1000'	DATE 11 / 9 / 82
PARTY R.K. J.F. B.F.W.	REFERENCES GLO Plat
WEATHER Cold & Wet	FILE LOMAX

Attachment A-1

EXHIBIT B

Page 1

#	Land Description	Minerals Ownership & Expires	Minerals Leased By	Surface Rights
1	Township 8 South, Range 17 East Section 29: Lot 1 Section 30: Lots 1-14 E/2NE/4, E/2SW/4, SW/4SE/4 Section 31: Lots 1-5, W/2E/2, SE/NE E/2W/2, NE/4SE/4	U-74869 HBP	Inland Production Company	(Surface Rights) USA
2	Township 8 South, Range 17 East Section 32: All	ML-22060 HBP	Inland Production Company Key Production Goldrus Drilling CO Class 10 lIQ. Trust King Oil & Gas Texas Ltd Jack Warren	(Surface Rights) St. of Utah
3	Township 8 South, Range 17 East Section 18: Lots 3,4 Section 19: Lots 1, 2 E2NW (excluding patent 880415) Section 29: N/2, N/2SW, SESW, SE.	U-76956 HBP	Inland Production Company	(Surface Rights) USA

Attachment B
(Pg 1 of 2)

EXHIBIT B
Page 2

#	Land Description	Minerals Ownership & Expires	Minerals Leased By	Surface Rights
4.	Township 8 South, Range 17 East Sections 19, 30 & 31	Raven, Blackbird and Brunette Mining Claims	Kaiser-Francis Oil Company	

Attachment B
(Pg 2 of 2)

ATTACHMENT C

CERTIFICATION FOR SURFACE OWNER NOTIFICATION

RE: Application for Approval of Class II Injection Well
Gilsonite State #5-32

I hereby certify that a copy of the injection application has been provided to all surface owners within a one-half mile radius of the proposed injection well.

Signed: _____
Inland Production Company
John E. Dyer
Chief Operating Officer

Sworn to and subscribed before me this 24th day of April, 1998.

Notary Public in and for the State of Colorado: Patsy A. Barreau

PATSY A. BARREAU
NOTARY
PUBLIC
STATE OF COLORADO

My Commission Expires 11/14/2000

Attachment E

Gilsonite State #5-32

Well History:

12-12-82	Spud Well
12-30-82	Perf: 5,414'-5,420'
1-1-83	Frac LDC zone as follows: Totals 12,500 gal, 17,500# 20/40 sd Avg TP 3,700 @ 25 BPM
1-6-83	Perf: 5,330'-5,334', 5,338'-5,346'
1-7-83	Frac A-1 zone as follows: Totals 24,500 gal, 76,000# 20/40 sd Max TP 4,000 @ 30 BPM Avg TP 2,600 @ 30 BPM ISIP 2,000
1-12-83	Perf: 4,866'-4,874', 4,880'-4,888'
1-13-83	Frac D-1 zone as follows: Totals 24,500 gal, 76,000# 20/40 sd Max TP 3,150 @ 30 BPM Avg TP 2,500 @ 31 BPM ISIP 2,200
12-20-95	Perf: 5832'-5842' w/4 JSPF
12-21-95	Frac w/63,400# 20/40 sd in 564 bbls Boragel @ avg rate of 22 BPM, 1900 psi. ISIP-2020 psi, 5 min 1871 psi.
12-22-95	Perf: 5320'-5347 w/4 JSPF
12-23-95	Frac w/87,500# 20/40 sd in 637 bbls Boragel @ avg rate of 30 BPM, 1420 psi. ISIP-1793, 5 min 1216psi.
12-24-95	Perf: 5143'-5160' w/4 JSPF
12-27-95	Frac w/78,000# 20/40 sd in 551 bbls Boragel @ avg ratae of 26 BPM, 1650 psi. ISIP-1668, 5 min 1561 psi.

Wellbore Diagram

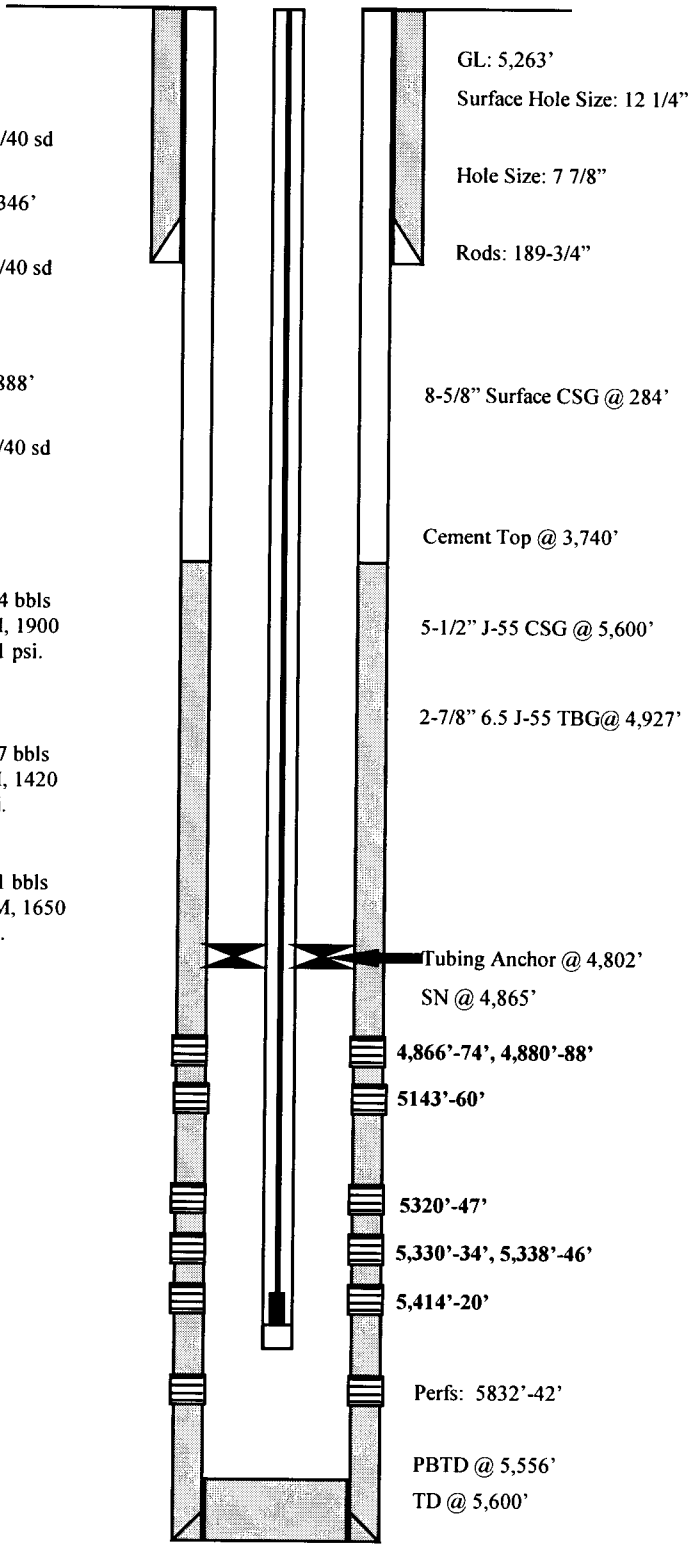

Inland Resources Inc.

Gilsonite State #5-32

559 FWL 1937 FNL

SWNW Section 32-T8S-R17E

Duchesne Co, Utah

API #43-013-30714; Lease #ML-22060

Attachment E-1

Gilsonite State #1-32

Wellbore Diagram

Well History:

10-8-81	Spud Well
11-5-81	Perf: 6,096', 6,097'-6,103', 6,104, 6,140'-6,144', 6,201.5'-8.5', 6,223'-29.5', 6,242'-6,245', 57.5', 58.5', 82.5', 84'
11-6-81	Frac LBS zone as follows: Totals 3,500 gal 2% KCl, 4,000 gal 20% HCl, 2,500 gal 2% KCL gal, 250# sd Max TP 6,000# Avg TP 4,500 @ 13 BPM ISIP 2,500, after 5 min 2,410
11-10-81	Perf: 5,296'-5,306', 53'-64', 74'-79', 94'-5,400', 09'-12', 74'-84', 89', 90'
11-12-81	Frac LDC zone as follows: Totals 4,000 gal, 2,200# ISIP 1,800, after 5 min 1,600 Stage 1: 19,000 gal, 35000# 20/40sd ATP 1,650 Stage 2: 32,500 gal, 60,000# 20/40 sd ATP 2,100 Stage 3: 20,050 gal, 33,200# 20/40 sd ATP 2,200 ISIP 2,000 after 15 min 1,950
6-83	Perf: 5,179'-5,197' Frac B-2 zone as follows: Totals 32,500 gal, 96,000# 20/40 sd Avg TP 2,100 @ 30 BPM Perf: 5,026'-5,038' Frac C-SD zone as follows: Totals 28,000 gal, 81,000# 20/40 sd Avg TP 2,000 @ 30 BPM Perf: 4,922'-4,929' Frac D-2 zone as follows: Totals 15,000 gal, 53,000# 20/40 sd Avg TP 2,500 @ 29 BPM

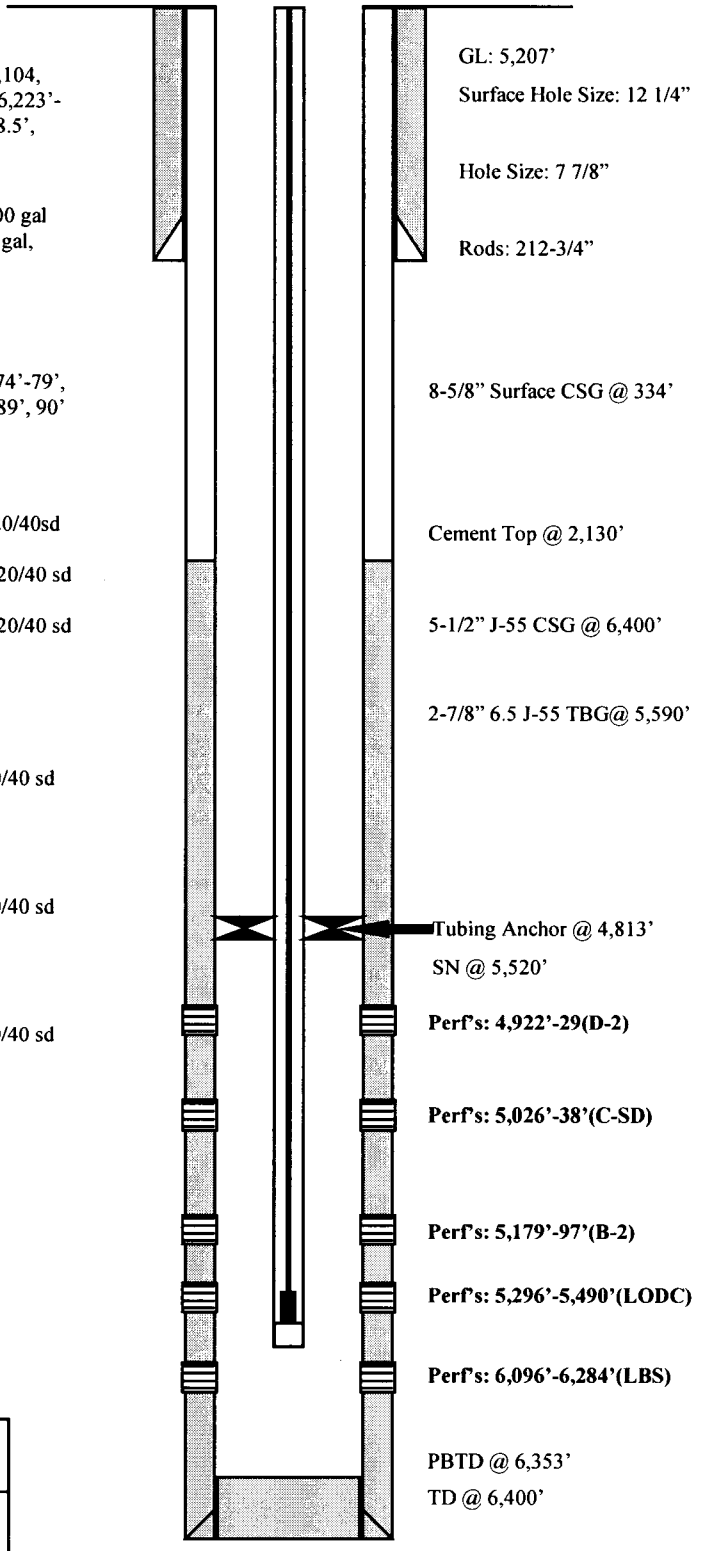

Inland Resources Inc.

Gilsonite State #1-32

1984 FWL 659 FNL

NENW Section 32-T8S-R17E

Duchesne Co, Utah

API #43-013-30599; Lease #ML-22060

Attachment E-2

Gilsonite State #4-32

Wellbore Diagram

Well History:

10-7-83	Spud Well
10-21-83	Perf: 5,600'-5,618'
10-23-83	Frac LDC zone as follows: Totals 30,500 gal, 77,000# 20/40 sd Max TP 3,600 @ 0 BPM Avg TP 3,200 @ 30 BPM ISIP 12, after 5 min 1,010
10-29-83	Perf: 5,433'-5,442', 5,461'-5,466', 5,476'-5,483'
11-2-83	Frac LDC zones as follows: Totals 33,850 gal, 89,800# 20/40 sd Max TP 3,250 @ 30 BPM Avg TP 1,895 @ 35 BPM ISIP 1,250, after 5 min. 1,070
10/30/96	Perf: 5267'-5271', 5274'-5278', 5347'-5359'
11/2/96	Frac A-1 & A-3 zones as follows: 75,700# of 20/40 sand in 471 bbls of Boragel. Breakdown @ 1649 psi. Treated @ avg rate of 24.4 bpm w/avg press of 1600 psi. ISIP-1745 psi, 5-min 1633 psi. Flowback on 12/64" ck for 2 hours and died.
11/5/96	PUT WELL ON PRODUCTION

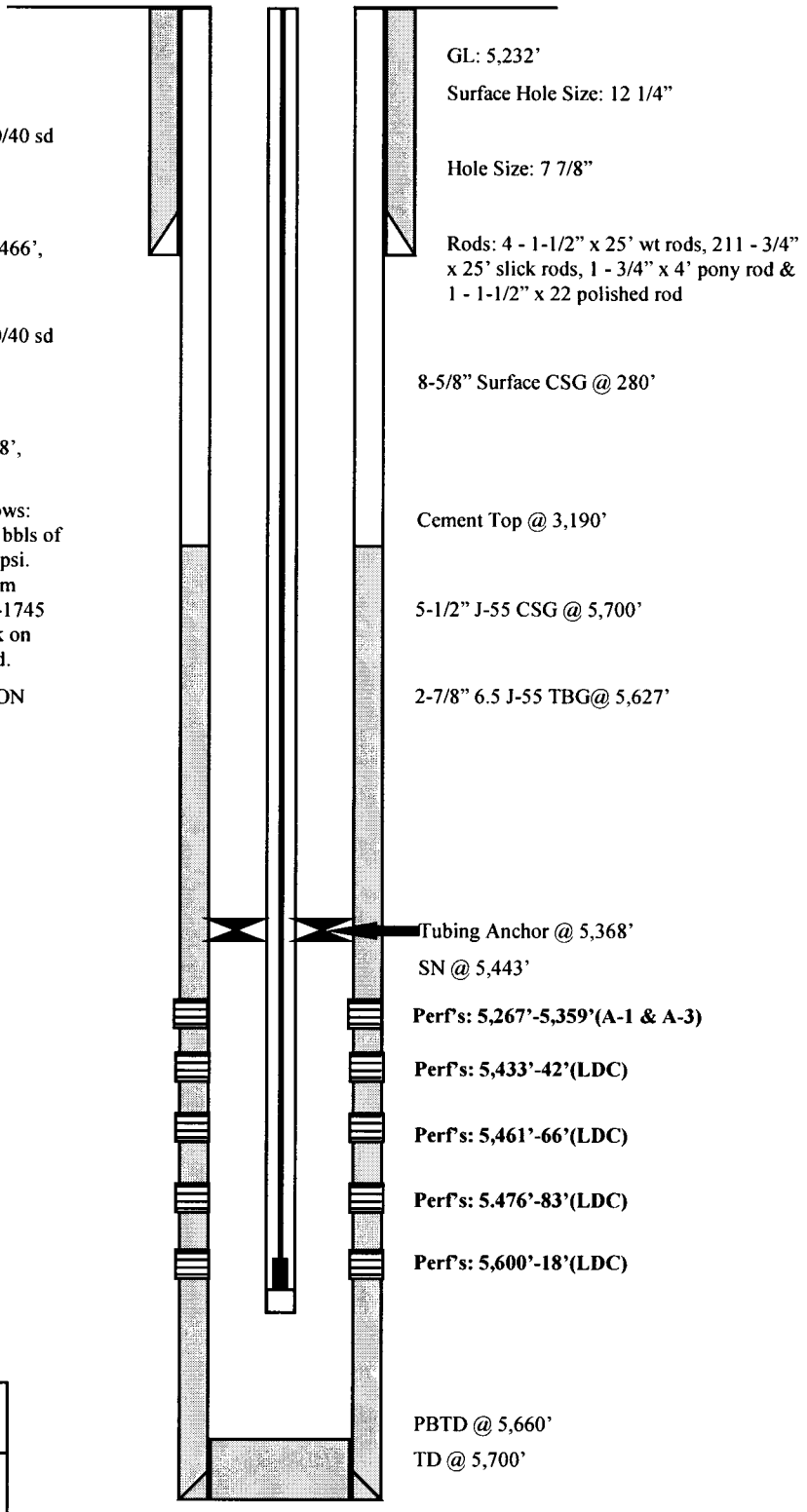

Inland Resources Inc.

Gilsonite State #4-32

515 FWL 562 FNL

NWNW Section 32-T8S-R17E

Duchesne Co, Utah

API #43-013-30800; Lease #ML-22060

Attachment E-3

Gilsonite State #6-32

Wellbore Diagram

Well History:

6/19/83	Spud Well
7/16/83	Perf: 5,303'-5,038', 5043'-5048' Frac C zone as follows: Totals 24,8000 gal, 61,400# 20/40 sd Avg TP 2,300 @ 30 BPM Set RBP @ 4650'
7/28/84	Perf: 4364'-4392'
7/29/84	Frac GB-4 zone as follows: Totals 45,000 gal, 153,000# 20/40 sd Avg TP 1850 @ 30 BPM IP: 53 BOPD, 76 MCFGPD
3/13/92	Remove BP, Tagged fill 5420'
9/28/96	Pump 50 bls hot KCl wtr dn csg. Unseat pump. Flush rods w/35 bbls hot KCl wtr. Change out 16 rod boxes and 1 slick rod.

PUT WELL BACK ON PRODUCTION @ 1:00 pm 9/27/96

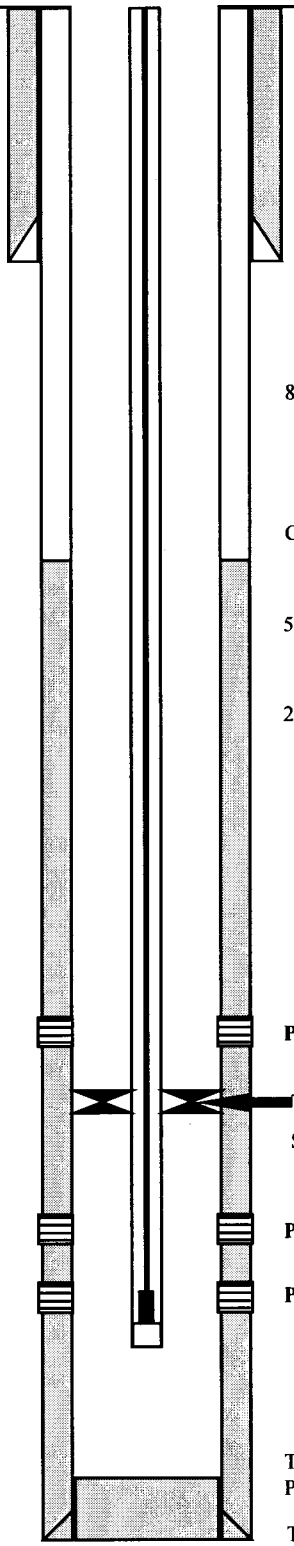

GL: 5,252'

Surface Hole Size: 12 1/4"

Hole Size: 7 7/8"

Rods: 74 - 3/4" slick rods, 34 - 3/4" slick rods, 87 - 3/4" scapered rods

8-5/8" Surface CSG @ 293'

Cement Top @ 3,190'

5-1/2" J-55 CSG @ 5,612'

2-7/8" 6.5 J-55 TBG@ 5,135'

Perf's: 4,364'-92'(GB-4)

Tubing Anchor @ 5,007'

SN @ 5,069'

Perf's: 5,033'-38'(C-SD)

Perf's: 5,043'-48'(C-SD)

Tagged fill at 5420'

PBTD @ 5,560'

TD @ 5,625'

Inland Resources Inc.

Gilsonite State #6-32

1911 FNL 1904 FWL

SENW Section 32-T8S-R17E

Duchesne Co, Utah

API #43-013-30748; Lease #ML-22060

Attachment E-4

Gilsonite State #11-32

Wellbore Diagram

Well History:

9-19-82	Spud Well
10-12-82	Perf: 5,413', 5,411', 5,443'-5,447' 5,002'-5,008, 4,994', 4,996'
10-13-82	Frac C-SD, B-2, & LDC zones as follows: Totals 39,280 gal, 71,400# 20/40 sd Max TP 3,100 Avg TP 2,500 @ 30 BPM ISIP 3,000, after 5 min. 1,300
10-16-82	Perf: 4,580'-4,588'
10-17-82	Frac PB-10 zone as follows: Totals 2,088 gal, 46,800# 20/40 sd Avg TP 1,900 @ 25 BPM
10-21-82	Perf: 4,378'-4,385', 4,396'-4,416'
10-22-82	Frac GB-6 zone as follows: Totals 26,100 gal, 10,400# 20/40sd Max TP 2,340 @ 30 BPM Avg TP 2,000 @ 31 BPM ISIP 1,800, after 5 min 1,640

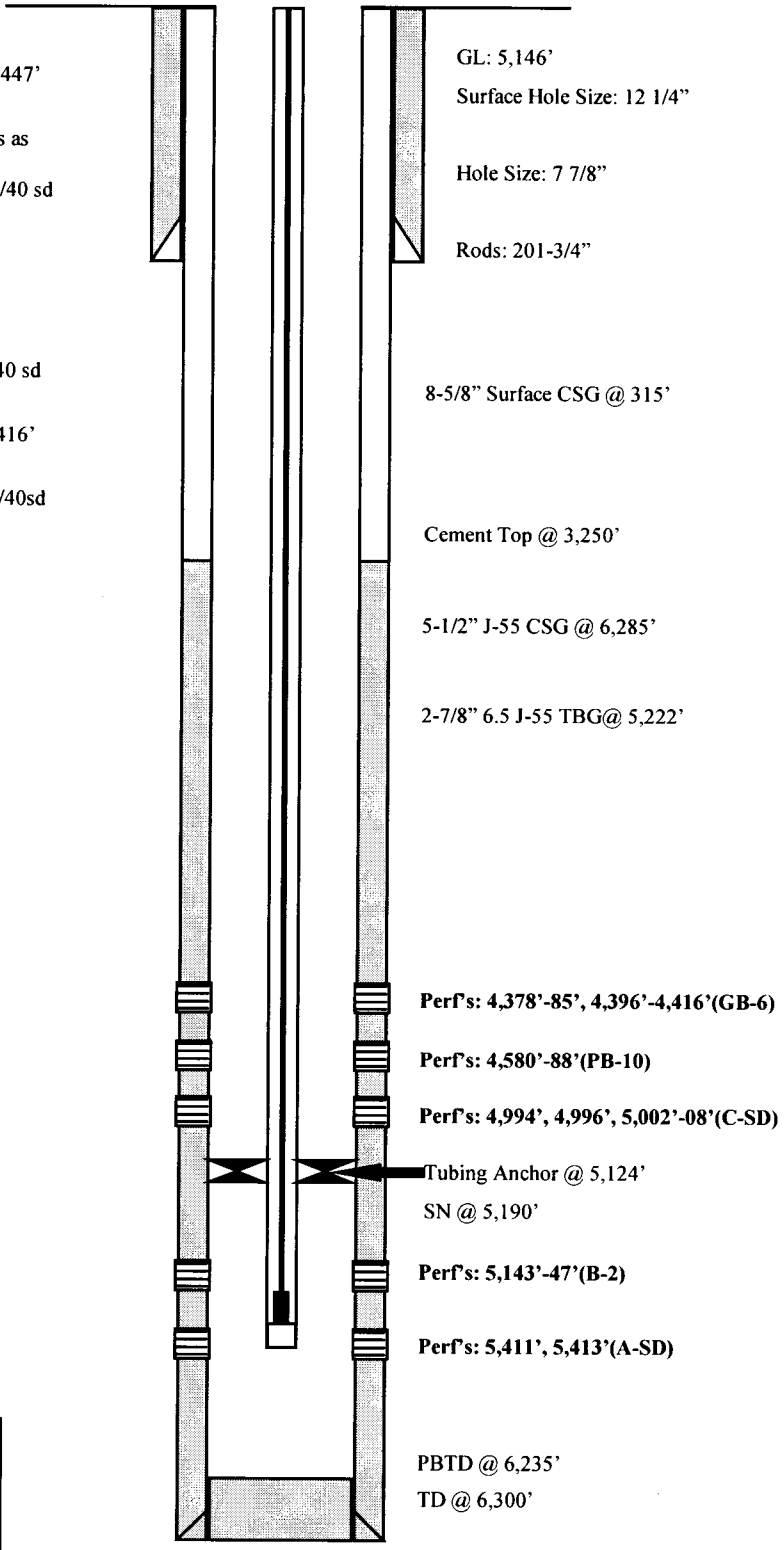

Inland Resources Inc.

Gilsonite State #11-32

1834 FWL 1936 FSL

NESW Section 32-T8S-R17E

Duchesne Co, Utah

API #43-013-30685; Lease #ML-22060

Attachment E-5

Gilsonite State #12-32

Injection Well

Wellbore Diagram

Well History:

11-2-83	Spud Well
11-16-83	Perf: 5,295'-5,311'
11-17-83	Frac LDC zone as follows: Totals 25,930 gal, 93,440# 20/40sd Max TP 3,700 @ 0 BPM Avg TP 2,000 @ 25 BPM ISIP 1,750, after 5 min 1,070
11-22-83	Perf: 5,148'-5,162'
11-27-83	Frac B-2 zone as follows: Totals 24,000 gal, 68,000# 20/40 sd Max TP 2,540 @ 25 BPM Avg TP 2,020 @ 25 BPM ISIP 2,100, after 5 min 1,570
12-3-83	Perf: 4,956'-4,697
12-6-83	Frac C-SD zone as follows: Totals 35,000 gal, 70,000# 20/40 sd Max TP 2,340 @ 37 BPM Avg TP 1,900 @ 37 BPM ISIP 1,700, after 5 min 1,510
6-7-93	Perf: 5,365'-5,468'
6-8-93	Frac LDC zone as follows: Totals 23,315 gal, 21,200# 20/40 sd 41,100# 16/30 sd Avg TP 3,450 @ 17.5 BPM
10-19-94	Converted to Water injector

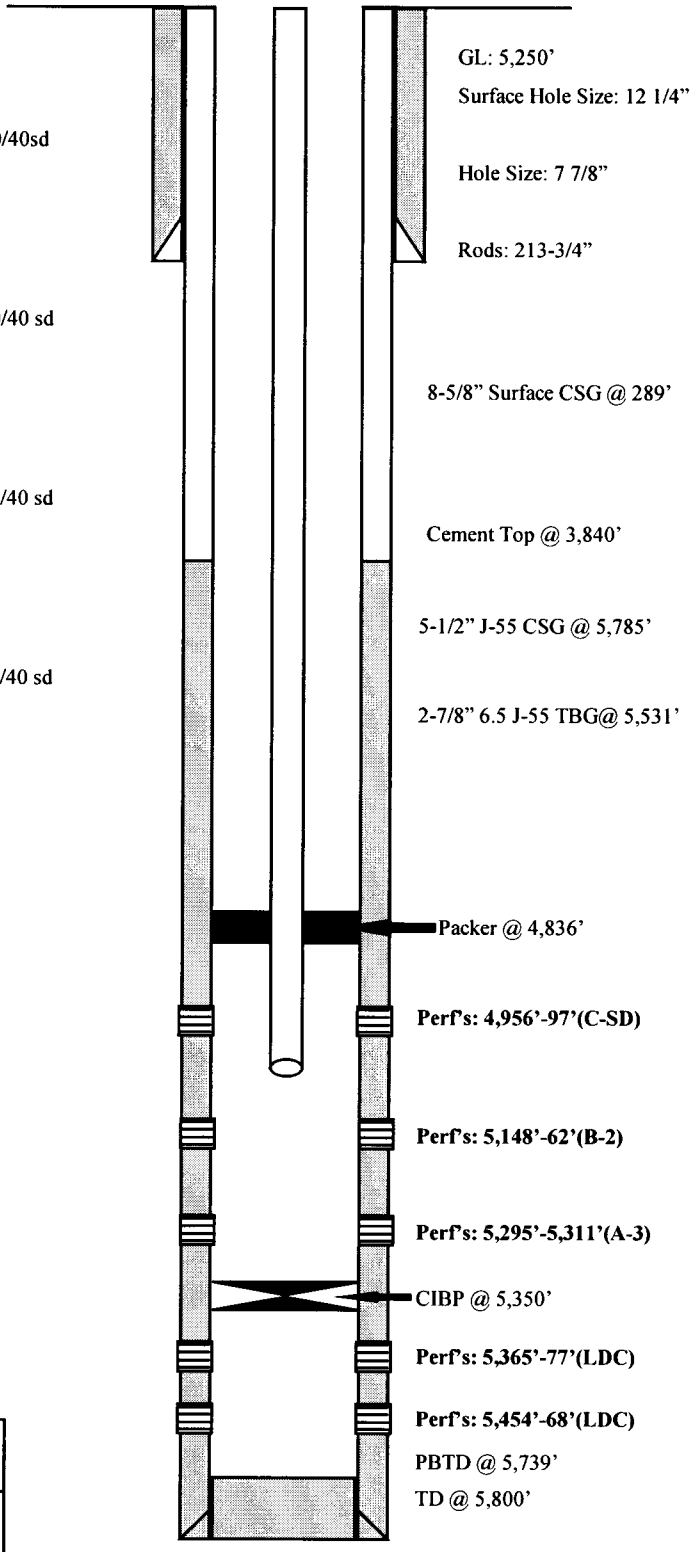

Inland Resources Inc.

Gilsonite State #12-32

767 FWL 1891 FSL

NWSW Section 32-T8S-R17E

Duchesne Co, Utah

API #43-013-30787; Lease #ML-22060

Attachment E-6

Tar Sands Federal #1-31

Spud Date: 10/4/96
Put on Production: 10/28/96
GL: 5250' KB: 5263'

Initial Production: 147 BOPD, 170 MCFPD, 5 BWPD

Wellbore Diagram

SURFACE CASING

CSG SIZE: 8-5/8"
GRADE: J-55
WEIGHT:24#
LENGTH: 7 jts. (284.88')
DEPTH LANDED: 284.68' GL
HOLE SIZE: 12-1/4"
CEMENT DATA: 120 sxs Type V cmt, est 9 bbls to surf.

PRODUCTION CASING

CSG SIZE: 5-1/2"
GRADE: J-55
WEIGHT: 15.5#
LENGTH: 100 jts. (6047.84')
DEPTH LANDED: 6033.34' KB
HOLE SIZE: 7-7/8"
CEMENT DATA: 390 sk Hibond mixed & 350 sxs thixotropic
CEMENT TOP AT: 638' per CBL

TUBING

SIZE/GRADE/WT.: 2-7/8" / LS / 6.5#
NO. OF JOINTS: 193 jts
TUBING ANCHOR: 5222'
SEATING NIPPLE: 2-7/8" (1.10')
TOTAL STRING LENGTH: ? (EOT @ 5726')
SN LANDED AT: 5443'

SUCKER RODS

POLISHED ROD: 1-1/2" x 22' SM
SUCKER RODS: 8-1" scrapered, 4-3/4" guided rods, 110-3/4" plain rods, 95-3/4" scrapered
PUMP SIZE: 2-1/2" x 1-1/2" x 12 x 15 RHAC rod pump
STROKE LENGTH: 86"
PUMP SPEED, SPM: 7 SPM
LOGS:Dual Laterlog, GR, SP, Spectral Density-Dual Spaced Neutron, CBL-GR

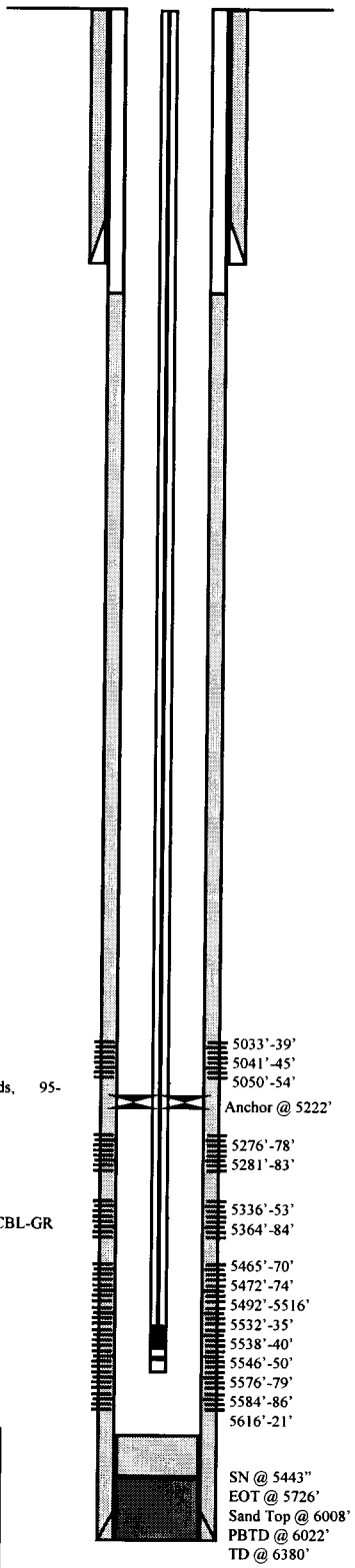

FRAC JOB

10/18/96 5465'-5621' **Frac LDC sand as follows:** 119,800# of 20/40 sand in 642 bbls of Delta Frac fluid. Breakdown @ 2830 psi. Treated @ avg rate of 40 bpm w/avg press of 1700 psi. ISIP-1661 psi, 5-min 1507 psi. Flowback on 12/64" ck for 1-1/2 hours and died.

10/21/96 5276'-5384' **Frac A-1 & A-3 sands as follows:** 103,700# of 20/40 sand in 525 bbls of Delta Frac fluid. Breakdown @ 2200 psi. Treated @ avg rate of 30.7 bpm w/avg press of 1600 psi. ISIP-1941 psi, 5-min 1573 psi. Flowback on 12/64" ck for 1-1/2 hours and died.

10/23/96 5033'-5054' **Frac C sand as follows:** 92,800# of 20/40 sand in 480 bbls of Delta Frac fluid. Breakdown @ 1510 psi. Treated @ avg rate of 21 bpm w/avg press of 1600 psi. ISIP-3916 psi, 5-min 2623 psi. Flowback on 12/64" ck for 2 hours and died.

PERFORATION RECORD

10/18/96	5465'-5470'	2 JSPF	10 holes
10/18/96	5472'-5474'	2 JSPF	4 holes
10/18/96	5492'-5516'	2 JSPF	48 holes
10/18/96	5532'-5535'	2 JSPF	6 holes
10/18/96	5538'-5540'	2 JSPF	4 holes
10/18/96	5546'-5550'	2 JSPF	8 holes
10/18/96	5576'-5579'	2 JSPF	6 holes
10/18/96	5584'-5586'	2 JSPF	4 holes
10/18/96	5616'-5621'	2 JSPF	10 holes
10/19/96	5276'-5278'	4 JSPF	4 holes
10/19/96	5281'-5283'	4 JSPF	8 holes
10/19/96	5336'-5353'	2 JSPF	34 holes
10/19/96	5364'-5384'	2 JSPF	38 holes
10/22/96	5033'-5039'	4 JSPF	24 holes
10/22/96	5041'-5045'	4 JSPF	16 holes
10/22/96	5050'-5054'	4 JSPF	16 holes

Inland Resources Inc.

Tar Sands Federal #1-31

639 FEL 706 FNL

NENE Section 31-T8S-R17E

Duchesne Co, Utah

API #43-013-31654; Lease #U-74870

Attachment E-7

Tar Sands Federal #7-31

Spud Date: 7/2/97
Put on Production: 7/31/97
GL: 5298' KB: 5310'

Initial Production: 247 BOPD, 240 MCFPD, 16 BWPD

Wellbore Diagram

SURFACE CASING

CSG SIZE: 8-5/8"
GRADE: J-55
WEIGHT:24#
LENGTH: 7 jts. (302.65')
DEPTH LANDED: 304.45'(GL)
HOLE SIZE:12-1/4"
CEMENT DATA: 120 sxs Premium cmt, est 6 bbls cmt to surf.

PRODUCTION CASING

CSG SIZE: 5-1/2"
GRADE: J-55
WEIGHT: 15.5#
LENGTH: 146 jts. (6180.51')
DEPTH LANDED: 6164.75'
HOLE SIZE: 7-7/8"
CEMENT DATA: 360 sk HiBond mixed & 340 sxs thixotropic
CEMENT TOP AT: 1305' per CBL

TUBING

SIZE/GRADE/WT.: 2-7/8"/M-50/6.5#.
NO. OF JOINTS: 194 jts.
TUBING ANCHOR: 5808'
SEATING NIPPLE: 2-7/8" (1.10')
TOTAL STRING LENGTH: EOT @ 6034'
SN LANDED AT: 5965'

SUCKER RODS

POLISHED ROD: 1-1/2" x 22' polished rod.
SUCKER RODS: 4-1" scapered, 5-7/8" plain rods, 130-3/4" plain, 99-3/4" scrapered
TOTAL ROD STRING LENGTH: ?
PUMP NUMBER: ?
PUMP SIZE: 2-1/2 x 1-1/2 z 15-1/2" RHAC pump
STROKE LENGTH: 74"
PUMP SPEED, SPM: 8 SPM
LOGS:Dual Laterlog, GR, SP, Spectral Density-Dual Spaced Neutron, CBL-GR

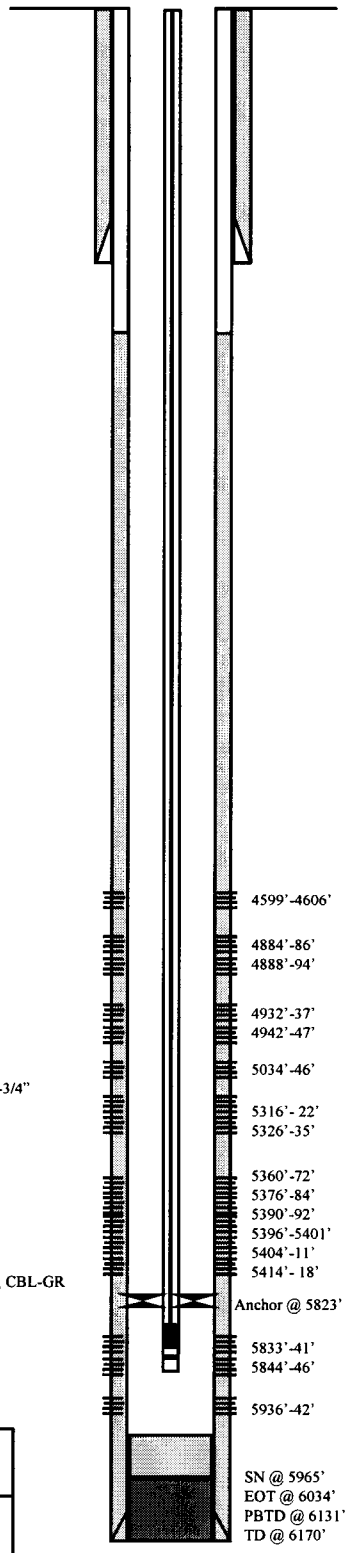

FRAC JOB

7/18/97 5833'-5942' **Frac CP-2 & CP-3 sands as follows:** 96,000# of 20/40 sand in 519 bbls of Boragel. Perfs Broke down @ 2537 psi. Treated @ avg press of 1300 psi w/avg rate of 26.5 bpm. ISIP-1835 psi, 5-min 1763 psi. Flowback on 12/64" ck for 4-1/2 hours and died.

7/21/97 5316'-5418' **Frac A-3 sands as follows:** 149,200# of sand in 694 bbls of Boragel. Perfs brokedown @ 2106 psi. Treated @ avg press of 1550 psi w/avg rate of 45 bpm. ISIP-1958 psi, 5-min 1817 psi. Flowback on 12/64" ck for 2-1/2 hours and died.

7/23/97 4884'-5046' **Frac D-1, D-2 & C sands as follows:** 137,700# of 20/40 sand in 650 bbls of Boragel. Perfs brokedown @ 2459 psi, then again @ 2896 psi @ 10.6 bpm. Treated @ avg press of 2200 psi w/avg rate of 36 bpm. ISIP-3204 psi, 5-min 3089 psi. Flowback on 12/64" ck for 3-1/2 hours and died.

7/24/97 4599'-4606' **Frac PB-10 sands as follows:** 73,600# of 20/40 sand in 398 bbls of Boragel. Perfs brokedown @ 2795 psi. Tretaed @ avg press of 2231 w/avg rate of 22.2 bpm. ISIP-3206 psi, 5-min 3125 psi. Flowback on 12/64" ck for 3-1/2 hours and died.

PERFORATION RECORD

7/17/97	5833'-5841'	4 JSPF	32 holes
7/17/97	5844'-5846'	4 JSPF	8 holes
7/17/97	5936'-5942'	4 JSPF	24 holes
7/19/97	5316'-5322'	2 JSPF	12 holes
7/19/97	5326'-5335'	2 JSPF	18 holes
7/19/97	5360'-5372'	2 JSPF	24 holes
7/19/97	5376'-5384'	2 JSPF	16 holes
7/19/97	5390'-5392'	2 JSPF	4 holes
7/19/97	5396'-5401'	2 JSPF	10 holes
7/19/97	5404'-5411'	2 JSPF	14 holes
7/19/97	5414'-5418'	2 JSPF	8 holes
7/22/97	4884'-4886'	4 JSPF	8 holes
7/22/97	4888'-4894'	4 JSPF	24 holes
7/22/97	4932'-4937'	4 JSPF	20 holes
7/22/97	4942'-4947'	4 JSPF	20 holes
7/22/97	5034'-5046'	4 JSPF	48 holes
7/24/97	4599'-4606'	4 JSPF	28 holes

Inland Resources Inc.

Tar Sands Federal #7-31

1870 FEL 1947 FNL

SWNE Section 31-T8S-R17E

Duchesne Co, Utah

API #43-013-31684; Lease #U-74869

Attachment E-8

Tar Sands Federal #8-31

Spud Date: 5/12/96
Put on Production: 6/25/96
GL: 5296' KB: 5309'

Initial Production: 262 BOPD, 165 MCFPD, 3 BWPD

Wellbore Diagram

SURFACE CASING

CSG SIZE: 8-5/8"
GRADE: J-55
WEIGHT:24#
LENGTH: 7 jts. (290.87')
DEPTH LANDED: 288.87'(GL)
HOLE SIZE:12-1/4"
CEMENT DATA: 120 sxs Premium cmt, est 5 bbls cmt to surf.

PRODUCTION CASING

CSG SIZE: 5-1/2"
GRADE: J-55
WEIGHT: 15.5#
LENGTH: 144 jts. (6205.40')
DEPTH LANDED: 6202'
HOLE SIZE: 7-7/8"
CEMENT DATA: 280 sk Hyfill mixed & 340 sxs thixotropic
CEMENT TOP AT: Surface per CBL

TUBING

SIZE/GRADE/WT.:2-7/8"/6.5#/LS tbg.
NO. OF JOINTS: ? jts.
TUBING ANCHOR: 5008'
SEATING NIPPLE: 2-7/8" (1.10')
TOTAL STRING LENGTH: EOT @ 5564'
SN LANDED AT: 5407'

SUCKER RODS

POLISHED ROD: 1-1/2" x 22' polished rod.
SUCKER RODS: 4-3/4" scrapered, 111-3/4" plain rods, 96-3/4" scrapered
TOTAL ROD STRING LENGTH: ?
PUMP NUMBER: ?
PUMP SIZE: 2-1/2 x 1-1/2 z 12 x 15 RHAC pump
STROKE LENGTH: 86"
PUMP SPEED, SPM: 7 SPM
LOGS:Dual Laterlog, GR, SP, Spectral Density-Dual Spaced Neutron, CBL-GR

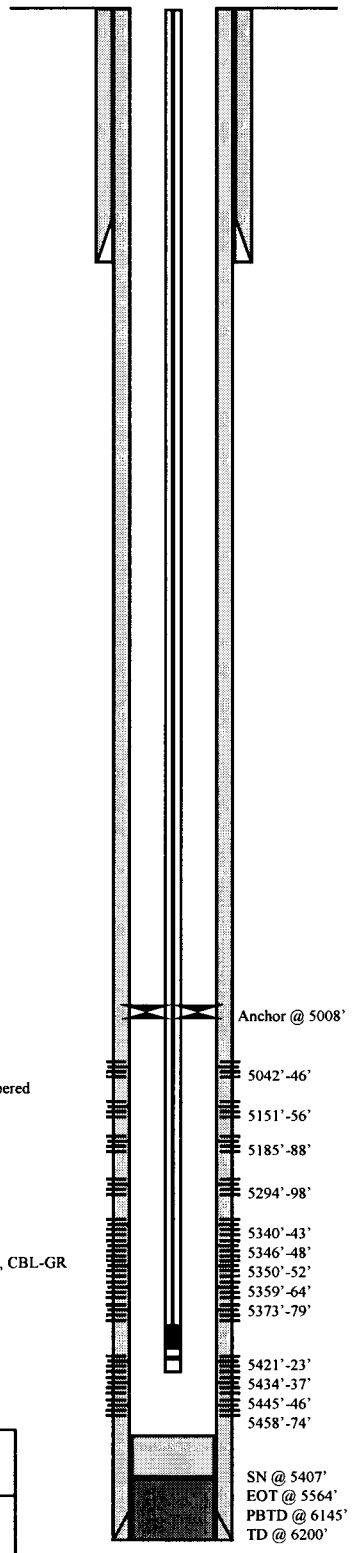

FRAC JOB

6/19/96	5294'-5474'	**Frac LDC, A-3 & A-1 sands as follows:** 161,500# of 20/40 sand in 727 bbls of Boragel. Breakdown @ 2307 psi, treated @ avg rate 46.7 bpm @ avg press of 950 psi. ISIP-1534, 5-min 1391 psi. Flowback after 5 min SI on 16/64" ck. Flowed for 1 hour and died.
6/21/96	5042'-5188'	**Frac B-2, B-1 & C sands as follows:** 94,700# of 20/40 sand in 510 bbls of Boragel. Breakdown @ 1156 psi treated @ avg rate 31 bpm w/avg press of 1300#. ISIP 2049 psi, 5-min 1837 psi. Start Flowback on 16/64" ck. Flowed for 2 hrs & died.

PERFORATION RECORD

6/18/96	5294'-5298'	4 JSPF	16 holes
6/18/96	5340'-5343'	2 JSPF	5 holes
6/18/96	5346'-5348'	2 JSPF	5 holes
6/18/96	5350'-5352'	2 JSPF	4 holes
6/18/96	5359'-5364'	2 JSPF	10 holes
6/18/96	5373'-5379'	2 JSPF	12 holes
6/18/96	5421'-5423'	2 JSPF	4 holes
6/18/96	5434'-5437'	2 JSPF	6 holes
6/18/96	5445'-5446'	2 JSPF	2 holes
6/18/96	5458'-5474'	4 JSPF	60 holes
6/20/96	5185'-5188'	4 JSPF	12 holes
6/20/96	5151'-5156'	4 JSPF	20 holes
6/20/96	5042'-5046'	4 JSPF	16 holes

Inland Resources Inc.

Tar Sands Federal #8-31

660 FEL 1980 FNL

SENE Section 31-T8S-R17E

Duchesne Co, Utah

API #43-013-31615; Lease #U-74869

Attachment E-9

Tar Sands Federal #9-31

Spud Date: 8/30/97
Put on Production: 10/9/97
GL: 5312' KB: 5322'

Initial Production: 131 BOPD, 127 MCFPD, 10 BWPD

Wellbore Diagram

SURFACE CASING

CSG SIZE: 8-5/8"
GRADE: J-55
WEIGHT:24#
LENGTH: 7 jts. (289')
DEPTH LANDED: 299'
HOLE SIZE:12-1/4"
CEMENT DATA: 140 sxs Premium cmt, est 8 bbls cmt to surf.

PRODUCTION CASING

CSG SIZE: 5-1/2"
GRADE: J-55
WEIGHT: 15.5#
LENGTH: 147 jts. (5931')
DEPTH LANDED: 5941'
HOLE SIZE: 7-7/8"
CEMENT DATA: 295 sk HiBond mixed & 285 sxs thixotropic
CEMENT TOP AT: 62'

TUBING

SIZE/GRADE/WT.: 2-7/8"/M-50/6.5#.
NO. OF JOINTS: 183 jts.
TUBING ANCHOR: 5720'
SEATING NIPPLE: 2-7/8"
TOTAL STRING LENGTH:
SN LANDED AT: 5785'

SUCKER RODS

POLISHED ROD: 1-1/2" x 22' polished rod.
SUCKER RODS: 4-11/2" wt rods; 4-3/4" scrapered; 124-3/4" plain
TOTAL ROD STRING LENGTH: ?
PUMP NUMBER: ?
PUMP SIZE: 2-1/2 x 1-1/2 x 16' RHAC pump
STROKE LENGTH: 86"
PUMP SPEED, SPM: 9.5 SPM
LOGS: DIGL/SP/GR/CAL (5948'-318')
SDL/DSN/GR (5902'-3000')

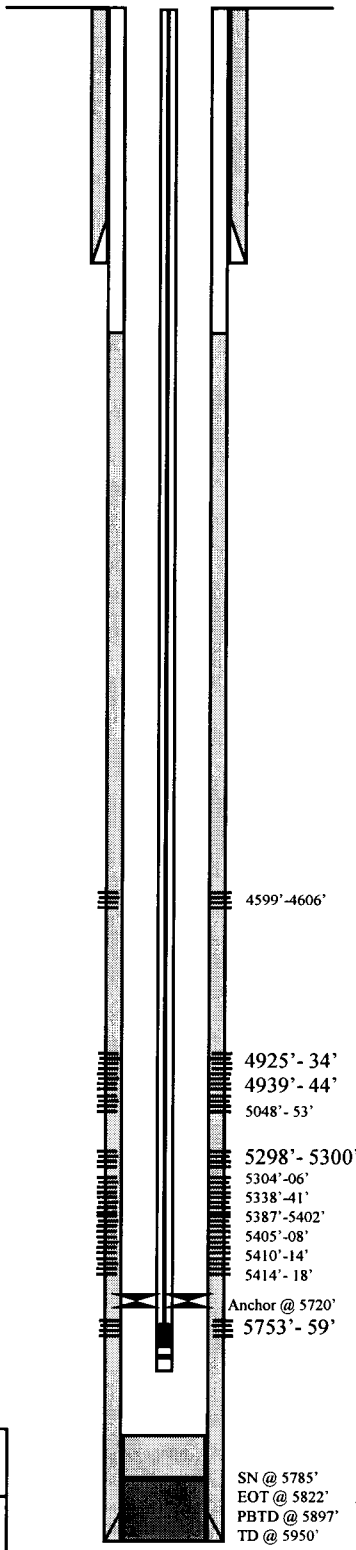

FRAC JOB

10/1/97 5753'-5759' **Frac CP sand as follows:**
95,900# of 20/40 sand in 522 bbls of Boragel. Perfs Broke down @ 3650 psi. Treated @ avg press of 1700 psi w/avg rate of 26 bpm. ISIP-1812 psi, 5-min 1727 psi. Flowback on 12/64" ck for 3 hours and died.

10/3/97 5298'-5420' **Frac A sand as follows:**
127,200# of sand in 6304 bbls of Boragel. Perfs brokedown @ 3084 psi. Treated @ avg press of 1500 psi w/avg rate of 42.2 bpm. ISIP-1796 psi, 5-min 1765 psi. Flowback on 12/64" ck for 3-1/2 hours and died.

10/5/97 4925'-5053' **Frac C/D sands as follows:**
104,300# of 20/40 sand in 518 bbls of Boragel. Perfs brokedown @ 2388 psi. Treated @ avg press of 2560 psi w/avg rate of 30 bpm. ISIP-3432 psi, 5-min 3367 psi. Flowback on 12/64" ck for 2-1/2 hours and died.

PERFORATION RECORD

9/30/97	5753'-5759'	4 JSPF	24 holes
10/2/97	5298'-5300'	4 JSPF	8 holes
10/2/97	5304'-5306'	4 JSPF	8 holes
10/2/97	5338'-5341'	4 JSPF	12 holes
10/2/97	5387'-5402'	4 JSPF	60 holes
10/2/97	5405'-5408'	4 JSPF	12 holes
10/2/97	5410'-5414'	4 JSPF	16 holes
10/2/97	5418'-5420'	4 JSPF	8 holes
10/4/97	4925'-4934'	4 JSPF	36 holes
10/4/97	4939'-4944'	4 JSPF	20 holes
10/4/97	5048'-5053'	4 JSPF	8 holes

Inland Resources Inc.

Tar Sands Federal #9-31

2163 FSL 722 FEL

NESE Section 31-T8S-R17E

Duchesne Co, Utah

API #43-013-31616; Lease #U-74869

Attachment E-10

Tar Sands Federal #13-29

Spud Date: 9/10/97
Put on Production: 10/9/97
GL: 5248' KB: 5261'

Initial Production: 120 BOPD, 642 MCFPD, 7 BWPD

Wellbore Diagram

SURFACE CASING

CSG SIZE: 8-5/8"
GRADE: J-55
WEIGHT:24#
LENGTH: 7 jts. (300')
DEPTH LANDED: 310' GL
HOLE SIZE: 12-1/4"
CEMENT DATA:140 sxs Premium cmt, est 4 bbls to surf.

Cement Top

PRODUCTION CASING

CSG SIZE: 5-1/2"
GRADE: J-55
WEIGHT: 15.5#
LENGTH: 145 jts. (6083')
DEPTH LANDED: 6093' KB
HOLE SIZE: 7-7/8"
CEMENT DATA: 285 sk Hibond mixed & 350 sxs thixotropic
CEMENT TOP AT:

TUBING

SIZE/GRADE/WT.: 2-7/8" / M-50 / 6.5#
NO. OF JOINTS: 189 jts
TUBING ANCHOR: 5875'
SEATING NIPPLE: 2-7/8"
TOTAL STRING LENGTH: ?
SN LANDED AT: 5936'

SUCKER RODS

POLISHED ROD: 1-1/2" x 22' SM
SUCKER RODS:8-1" scrapered; 133-3/4" plain; 95-3/4" scrapered; 1-8', 1-6', 2-4'x3/4" pony rod
PUMP SIZE: 2-1/2" x 1-1/2" x 15-1/2' RHAC rod pump
STROKE LENGTH: 86"
PUMP SPEED, SPM: 9.5 SPM
LOGS: HRI/SP/GR/CAL (6094'-310')
DSN/SDL/GR (6072'-3000')

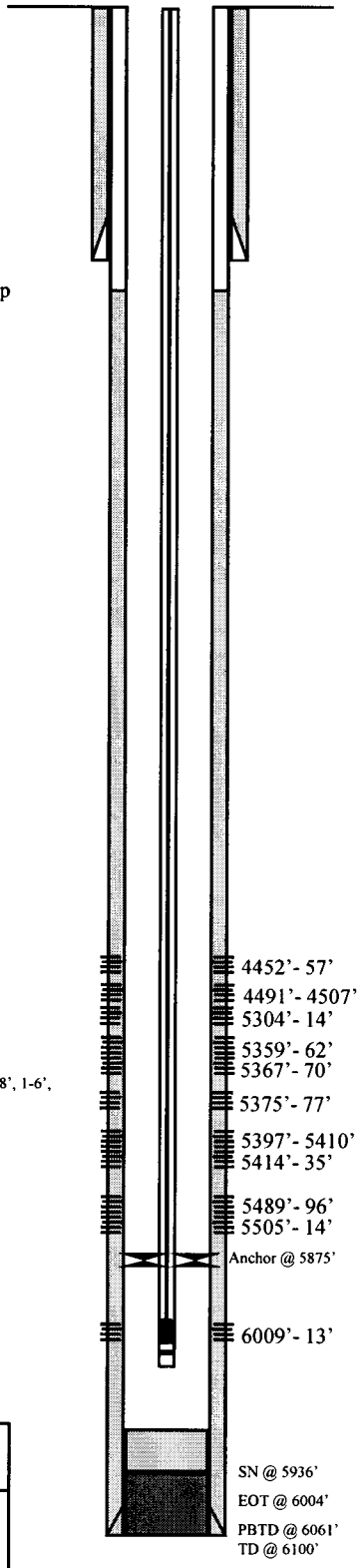

FRAC JOB

10/1/97 5489'-6013' **Frac CP sand as follows:** 99,300# of 20/40 sand in 524 bbls of Boragel. Breakdown @ 2820 psi. Treated @ avg rate of 26.3 bpm w/avg press of 1775 psi. ISIP-1888 psi, 5-min 1671 psi. Flowback on 12/64" ck for 4 hours and died.

10/3/97 5304'- 5538' **Frac A sand as follows:** 159,300# 20/40 sand in 752 bbls of Boragel. Breakdown @ 2340 psi. Treated w/avg press of 1620 psi w/avg rate of 46.1 BPM. ISIP-1736 psi, 5 min 1652 psi. Flowback on 12/64" ck for 3 hrs and died.

10/5/97 4452'- 4507' **Frac GB sand as follows:** 97,700# 20/40 sand in 497 bbls of Boragel. Breakdown @ 2377 psi. Treated w/avg press of 1980 psi w/ avg rate of 25 BPM. ISIP-2445 psi, 5 min 2425 psi. Flowback on 12/64" ck for 4-1/2 hrs and died.

PERFORATION RECORD

9/30/97	5489'-5496'	4 JSPF	12 holes
9/30/97	6009'-6013'	4 JSPF	16 holes
10/2/97	5304'-5314'	2 JSPF	20 holes
10/2/97	5359'-5362'	2 JSPF	6 holes
10/2/97	5367'-5370'	2 JSPF	6 holes
10/2/97	5375'-5377'	2 JSPF	4 holes
10/2/97	5397'-5410'	2 JSPF	26 holes
10/2/97	5414'-5435'	2 JSPF	42 holes
10/2/97	5460'-5467'	2 JSPF	14 holes
10/2/97	5505'-5514'	2 JSPF	18 holes
10/2/97	5517'- 5519'	2 JSPF	4 holes
10/2/97	5521'- 5523'	2 JSPF	4 holes
10/2/97	5533'- 5538'	2 JSPF	10 holes
10/4/97	4452'- 4457'	4 JSPF	20 holes
10/4/97	4491'- 4507'	4 JSPF	64 holes

Inland Resources Inc.

Tar Sands Federal #13-29

766 FSL 808 FWL

SWSW Section 29-T8S-R17E

Duchesne Co, Utah

API #43-013-31925; Lease #U-74869

Attachment F

UNICHEM

A Division of BJ Services

P.O. Box 217
Roosevelt, Utah 84066

Office (801) 722-5066
Fax (801) 722-5727

WATER ANALYSIS REPORT

Company INLAND Address _____ Date 01-14-98

Source Johnson Water FRESH WATER Date Sampled _____ Analysis No. _____

	Analysis		mg/l(ppm)		*Meq/l	
1. PH	7.0					
2. H_2S (Qualitative)	0.5					
3. Specific Gravity	1.001					
4. Dissolved Solids			593			
5. Alkalinity ($CaCO_3$)		CO_3	0	÷ 30	0	CO_3
6. Bicarbonate (HCO_3)		HCO_3	300	÷ 61	5	HCO_3
7. Hydroxyl (OH)		OH	0	÷ 17	0	OH
8. Chlorides (Cl)		Cl	35	÷ 35.5	1	Cl
9. Sulfates (SO_4)		SO_4	110	÷ 48	2	SO_4
10. Calcium (Ca)		Ca	44	÷ 20	2	Ca
11. Magnesium (Mg)		MG	22	÷ 12.2	2	Mg
12. Total Hardness ($CaCO_3$)			200			
13. Total Iron (Fe)			2.2			
14. Manganese						
15. Phosphate Residuals						

*Milli equivalents per liter

PROBABLE MINERAL COMPOSITION

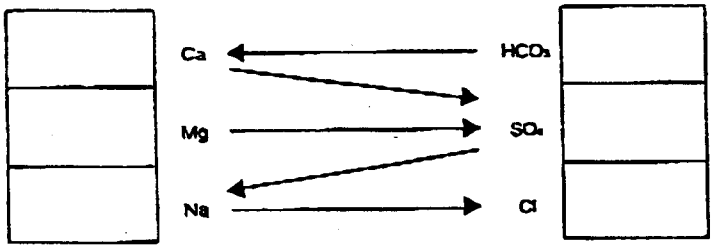

Compound	Equiv. Wt.	X	Meq/l	=	Mg/l
$Ca(HCO_3)_2$	81.04		2		162
$CaSO_4$	68.07				
$CaCl_2$	55.50				
$Mg(HCO_3)_2$	73.17		2		146
$MgSO_4$	60.19				
$MgCl_2$	47.62				
$NaHCO_3$	84.00		1		84
Na_2SO_4	71.03		2		142
NaCl	58.46		1		59

Saturation Values	Distilled Water 20°C
$CaCO_3$	13 Mg/l
$CaSO_4 \cdot 2H_2O$	2,090 Mg/l
$MgCO_3$	103 Mg/l

REMARKS _____

Attachment F-1

Champion Technologies, Inc.
2060 SOUTH 1500 EAST
VERNAL, UTAH 84078

Water Analysis Report

Telephone (801) 789-4327

Customer :	Inland Resources	Field :	Monument Butte
Address :	P.O. Box 1448	Lease :	Gilsonite
City :	Roosevelt	Location :	Gilsonite 1A-32
State :	UT Postal Code : 84066	Sample Point :	treater
Attention :	Joe Ivey	Date Sampled :	14-Apr-98
cc1 :	Ron Schuck	Date Received :	15-Apr-98
cc2 :	Jody LaDell	Date Reported :	24-Apr-98
cc3 :		Salesman :	John Pope
Comments :		Analyst :	Karen Hawkins Allen

CATIONS

Calcium :	0	mg/l
Magnesium :	600	mg/l
Barium :	0	mg/l
Strontium :	0	mg/l
Iron :	40.0	mg/l
Sodium :	9531	mg/l

ANIONS

Chloride :	13,400	mg/l
Carbonate :	840	mg/l
Bicarbonate :	3,660	mg/l
Sulfate :	1,248	mg/l

pH (field) :	9.24		Specific Gravity :	1.015	grams/ml
Temperature :	85	degrees F	Total Dissolved Solids :	29,319	ppm
Ionic Strength :	0.46		CO2 in Water :	1	mg/l
			CO2 in Gas :	0.03	mole %
Resistivity :		ohm/meters	H2S in Water :	68.0	mg/l
Ammonia :		ppm	Dissolved Oxygen :		ppm

SI calculations based on Tomson-Oddo parameters

Calcite (CaCO3) SI	N/A	Calcite PTB	N/A
Calcite (CaCO3) SI @ 100 F	N/A	Calcite PTB @ 100 F	N/A
Calcite (CaCO3) SI @ 120 F	N/A	Calcite PTB @ 120 F	N/A
Calcite (CaCO3) SI @ 140 F	N/A	Calcite PTB @ 140 F	N/A
Calcite (CaCO3) SI @ 160 F	N/A	Calcite PTB @ 160 F	N/A
Gypsum (CaSO4) SI	N/A	Gypsum PTB	N/A
Barite (BaSO4) SI	N/A	Barite PTB	N/A
Celestite (SrSO4) SI	N/A	Celestite PTB	N/A

Recieved Time Apr. 24. 2:54PM

Water Analysis, Scaling Tendency, and Compatibility Evaluation

Company : INLAND
Field / Lease : Monument Butte
Service Engineer : John Pope

A = Johnson Water
B = Gilsonite 1A-32

Chemical Component	100 % A	90% A:10%B	80%A:20% B	70%A:30% B	60%A:40% B	50%A:50% B	40%A:60% B	30%A:70% B	20%A:80% B	10%A:90% B	100% B
Chloride (Cl) mg/l	2,800	3,860	4,920	5,980	7,040	8,100	9,160	10,220	11,280	12,340	13,400
Sulfate (SO4) mg/l	455	534	614	693	772	852	931	1010	1089	1169	1248
Carbonate (CO3) mg/l	0	84	168	252	336	420	504	588	672	756	8[illegible]
Bicarbonate (HCO3) mg	268	607	946	1,286	1,625	1,964	2,303	2,642	2,982	3,321	3,660
Calcium (Ca) mg/l	232	209	186	162	139	116	93	70	46	23	0
Magnesium (Mg) mg/l	131	178	225	272	319	366	412	459	506	553	600
Iron (Fe) mg/l	3.0	6.7	10.4	14.1	17.8	21.5	25.2	28.9	32.6	36.3	40.0
Barium (Ba) mg/l	0	0	0	0	0	0	0	0	0	0	0
Strontium (Sr) mg/l	0	0	0	0	0	0	0	0	0	0	0
Sodium (Na) mg/l	1,621	2,476	3,331	4,187	5,042	5,898	6,753	7,608	8,464	9,319	10,175
Ionic Strength	0.11	0.15	0.20	0.24	0.28	0.33	0.37	0.41	0.46	0.50	0.54
Dissolved Solids (TDS)	5,510	7,955	10,400	12,845	15,291	17,736	20,181	22,627	25,072	27,517	29,963
Specific Gravity @ 60F	1.005	1.006	1.007	1.008	1.009	1.010	1.011	1.012	1.013	1.014	1.015
Temperature (F)	100	100	100	100	100	100	100	100	100	100	100
Is (TOMSON-ODDO)	0.06	0.57	0.88	1.13	1.35	1.54	1.70	1.83	1.90	1.85	#NUM!
Pressure (psia)	14.7	14.7	14.7	14.7	14.7	14.7	14.7	14.7	14.7	14.7	14.7
Field pH	6.93	7.16	7.39	7.62	7.85	8.09	8.32	8.55	8.78	9.01	9.2[illegible]
% CO2 (Mole %)	0.03	0.03	0.03	0.03	0.03	0.03	0.03	0.03	0.03	0.03	0.03

Scaling Tendency (Pounds per Thousand BBLS of Scale Which Should Form)

CaCO3 (Tomson-Oddo)	8.9	111.2	134.0	129.0	115.2	98.0	79.2	59.8	40.0	20.0	-0.2
BaSO4 (Tomson)	0.0	0.0	0.0	0.0	0.0	-0.1	-0.1	-0.1	-0.1	-0.1	-0.1
CaSO4 (Tomson)	-1121.8	-1223.4	-1314.6	-1398.6	-1477.3	-1551.7	-1622.7	-1690.7	-1756.1	-1819.4	-1880.6
SrSO4 (Tomson)	-28.8	-30.0	-31.0	-31.8	-32.5	-33.1	-33.6	-34.1	-34.6	-35.0	-35.4

Attachment F-2

Recieved Time Apr. 24. 2:54PM

8017894315

Attachment G

Gilsonite State #5-32
Proposed Maximum Injection Pressure

Frac Interval (feet) Top	Bottom	Avg. Depth (feet)	ISIP (psi)	Frac Gradient (psi/ft)	Pmax
5832	5842	5837	2020	0.78	2011
5414	5420	5417	2000	0.80	1975
5330	5346	5338	2000	0.81	1998
5320	5347	5334	1793	0.77	1781
5143	5160	5152	1668	0.76	1671 ←
4866	4888	4877	2200	0.88	2165
				Minimum	1671

Calculation of Maximum Surface Injection Pressure

Pmax = (Frac Grad -(0.433*1.005)) x Depth of Top Perf
where pressure gradient for the fresh water is .433 psi/ft and
specific gravity of the injected water is 1.005.

Frac Gradient is obtained from the service company's frac summary report.

Attachment G-1

LOMAX EXPLORATION COMPANY

State #5-32
Section 32, T8S, R17E
Duchesne County, Utah

COMPLETION REPORT

12/29/82 PBD - 5560'. Present Operation - TIH to circ, prep to perf. (1 day)
REMARKS: MI Gamache rig #1. R/U and start in hole w/tubing to circ hole. Prepare to perf.

12/30/82 PBD - 5553'. Present Operation - frac. (2 days)
REMARKS: Tag PBD w/tubing @ 5556'. Circ hole w/3% KCl + clay stab. Pressure test casing to 3000#. R/U Dresser Atlas & ran GR-CBL. Good bonding. Perf 5414-20 w/2 SPF. Broke down perfs w/3800 psi w/rig pump. Prep to frac.

12/31/82 Present Operation - prep to frac. (3 days)
REMARKS: R/U Western. Pumped 112 bbl pad. 8 5/8 x 5 1/2" annulus surging water to 20' while pumping. Shut down. N/D tubing head. Checked packing elements & csg slips. Appeared to be OK. N/U tbg head & retested to 2700 psi - OK. Repaired leak @ base of surface csg head. Csg was thinned by apparent DP wear. TIH w/pkr to 4030'. Tested csg to 3500 psi - held 10 min - OK. TOOH w/pkr. Prep to frac

01/01/83 Present Operation - shut in after frac. (4 days)
REMARKS: R/U Western & frac well as follows:
1) 6000 gal pad
2) 1500 gal 1 ppg 20/40 sand
3) 2000 gal 2 ppg 20/40 sand
4) 3000 gal 4 ppg 20/40 sand
5) Flush w/82 bbls 3% KCl water
Initial rate 14 BPM @ 3500 psi increasing to 25 BPM @ 3700 psi by end of pad. Went to flush @ end of 4 ppg stage. Job screened out. Shut well in.

01/02-03/83 Present Operation - shut in for weekend. (5-6 days)

01/04/83 Present Operation - prep to swab. (7 days)
REMARKS: SICP - 0 psi. TIH w/ 2 7/8 x 2 3/8" sledge & tbg. Tag sand @ 4925'. Circ out sand to 5550'. L/D 8 jts tbg. EOT @ 5295'. R/U to swab. Shut down for night.

01/05/83 Present Operation - swabbing. (8 days)
REMARKS: R/U to swab. IFL @ 100', FFL @ 5295'. Made 15 swab runs. Final 3 runs hourly. Recovered 112 BLW, 7 BNO. Influx based on final 3 runs - 1.5 BPH w/20% OC each run. Moderate gas, trace sand. SDFN.
CUM. COST: $215,711

Attachment G-2

COMPLETION REPORT - 2
State #5-32
Section 32, T8S, R17E
Duchesne County, Utah

01/06/83 Present Operation - prep to frac. (9 days)
REMARKS: 14 hr SITP - 100 psi. Made 1 swab run to check FL. FL @ ±3900'. TOOH w/tubing. P/U RBP & TIH. Set BP @ 5400' KB. Tested to 3000# - OK. TOOH. R/U Wireline. TIH w/dump bailer. Capped BP w/1 sx sand. Perforate FDC-CNL 5330-34 & 5338-46 w/1 JSPF using 4" HSC csg gun & 22.5 gram charges. Broke perfs down w/rig pump - 2600 psi. R/D Wireline. SDFN.
CUM. COST: $222,456

01/07/83 Present Operation - SI after frac. (10 days)
REMARKS: R/U Western & frac well as follows:
1) 7500 gal pad
2) 2000 gal 1 ppg 20/40 sand
3) 3000 gal 2 ppg 20/40 sand
4) 4500 gal 4 ppg 20/40 sand
5) 5000 gal 6 ppg 20/40 sand
6) 2500 gal 8 ppg 20/40 sand
7) Flush w/123 bbls 3% KCl water.
Max TP 4000 @ 30 BPM, Avg TP 2600 @ 30 BPM, ISIP - 2000.
Shut well in overnight.
CUM. COST: $245,301

01/08/83 Present Operation - swabbing. (11 days)
REMARKS: 22 hr SICP - 950 psi. Flowed to tank for 4 hrs thru 16/64 choke. Pressure dropped to 0 psi in 1 1/2 hrs. Recovered 71 BLW, no gas or oil. P/U retr head & pkr. TIH. Tag sand @ 5313'. Circ sand to 5375'. Set pkr @ 5220'KB. R/U to swab IFL @ surface, FFL @ 5200'. Made 7 swab runs & recovered 67 BLW 2 BNO. Final 2 runs from 5200'. Influx 8 BPH - 5% oil, 5% sand & slight gas. SDFN.
CUM. COST: $248,196

01/09/83 Present Operation - shut in for Sunday. (12 days)
REMARKS: 14 hr SITP - 400 psi. Blew well down in 5 min - no fluid. R/U to swab. IFL @ 600', FFL @ 5200'. Made 12 swab runs & recovered 20 BLW, 29 BNO. Influx 1 BPH. Final sample - 80% OC w/trace sand Sand varied from trace to 10% through out day, slight gas. Shut down for Sunday.
CUM. COST: $251,141

01/11/83 Present Operation - swabbing. (13 days)
REMARKS: 38 hr SITP - 300 psi. TIH w/swab to ck FL. Fluid @ 500'. Released pkr & TIH. Tag sd @ 5303'KB. Circ sd to 5375'. Reset pkr @ 5220'. Recovered approx 27 BNO while circulating sand. R/U to swab. IFL @ surface, FFL @ 5200'; made 11 swab runs & recovered 32 BLW, 19 BNO. Final 3 runs made hourly. Influx steady @ 2 BPH. Final sample - 100% oil w/less than 1% sand, moderate gas. SDFN.
CUM. COST: $254,086

Attachment G-3

LOMAX EXPLORATION COMPANY
COMPLETION REPORT - 3
State #5-32
Section 32, T8S, R17E
Duchesne County, Utah

01/12/83 Present Operation - prep to frac. (14 days)
REMARKS: 14 hr SITP - 250 psi. Blew well down. Released pkr. Circ 18 BNO to tank. TIH. Tag sd @ 5341'KB. Circ sd to BP @ 5400' & circ hole clean. TOOH w/pkr & plug. Reset BP @ 5244'KB. Tested BP to 3000 psi - OK. TOOH w/pkr. R/U Wireline. TIH with dump bailer. Cap BP w/1 sx sd. Perf FDC-CNL interval 4866-74 & 4880-88 w/4 & 9 shots respectively using 4" HSC csg gun. Broke perfs down w/rig pump @ 2600 psi. R/D Wireline.
CUM. COST: $258,181

01/13/83 Present Operation - SI after frac. (15 days)
REMARKS: R/U Halliburton & frac well as follows:
1) 7500 gal pad
2) 2000 gal 1 ppg 20/40 sand
3) 3000 gal 2 ppg 20/40 sand
4) 4500 gal 4 ppg 20/40 sand
5) 5000 gal 6 ppg 20/40 sand
6) 2500 gal 8 ppg 20/40 sand
7) Flush to perfs
Max TP 3150 @ 30 BPM, Avg TP 2500 @ 31 BPM, ISIP 2200
Shut well in for night.
CUM. COST: $280,426

01/14/83 Present Operation - swabbing. (16 days)
REMARKS: 23 hr. SICP 500 psi. Flowed well to tank thru 16/64 choke for 5 hrs. Pressure decreased to 0 psi in 2 1/4 hrs. Recovered 54 BLW. P/U retrieving head & pkr. TIH. Tag sd @ 4940'KB. Circ sand to 5020'. TOOH & set pkr @ 4700'. R/U to swab. IFL @ surf. FFL @ 3000'. Made 5 swab runs & recovered 67 BLW w/trace of oil, no sand. SDFN.
CUM. COST: $284,421

Attachment G-4/G-5

INLAND PRODUCTION COMPANY
SUNDANCE STATE #5-32
Daily Completion Report
SW/SE Sec. 32, T8S, R18E
Duchesne County, Utah
TD: 6919'
Srfce Spud Date: 6/15/95
Rotary Spud Date: 6/24/95
Comp Rig: Basin Well #3
API #43-047-32685

12/19/95 PO: Perf CP. (Day 1)
Summary: 12/18/95 - MIRU Basin Rig #3. NU BOP's. PU 4-3/4" bit & 5-1/2" csg scraper & 196 jts 2-7/8 6.5# WC-50 tbg, tag PBTD @ 6198'. Press tst csg to 3000 psi - OK. RU swb, IFL 0', rec 78 BW. FFL 3300'. SDFN.
DC: $2,055 TWC: $152,663

12/20/95 PO: Frac CP. (Day 2)
Summary: 12/19/95 - RU swb. Cut & slip sd line. Swb FL to 5300'. TOH w/tbg. RU Dresser Atlas WL & **PERF CP 5832-5842' w/4 jspf.** TIH w/tbg to 6100'. RU swb. IFL 5100'. Pull 4 runs, rec 13 BW w/tr oil. FFL 5900'. SDFN.
DC: $3,330 TWC: $155,993

12/21/95 PO: Prep to perf "B" sd. (Day 3)
Summary: 12/20/95 - TP: 50 psi, CP: 50 psi. RU swb, IFL 5700'. Pull 2 runs rec 3 BW. FFL 6000'. TOH w/tbg. NU tree saver & RU Halliburton & frac Castle Peak w/63,400# 20/40 sd in 564 bbls Boragel @ avg rate 22 BPM, 1900 psi. ISIP: 2020 psi, 5 min: 1871 psi, 10 min: 1700 psi. Flowback @ 1 BPM on 12/64" ck for 4 hrs until dead. Rec 225 BW w/tr sd. SDFN. Est 339 BLWTBR.
DC: $19,315 TWC: $175,308

12/22/95 PO: Prep to frac "B" sd. (Day 4)
Summary: 12/21/95 - TP: 0 psi, CP: 0 psi. TIH w/tbg & RBP. Set plug @ 5450'. Spot 1 sk sd on plug. RU swb & pull FL to 4800'. Rec 114 BW. TOH w/tbg. RU Western Atlas WL & **PERF "B" SD 5320-5347' W/4 JSPF.** TIH w/tbg to 1600'. SDFN. Est 225 BLWTBR.
DC: $4,115 TWC: $179,423

12/23/95 PO: Perf "C" sd. (Day 5)
Summary: 12/22/95 - SIP: 0 psi. TIH w/tbg to 5449'. No sd on plug. RU swb. IFL @ 3200'. Made 9 swb runs, rec 47 bbls fluid w/tr oil. TOH w/tbg. NU tree saver. RU Halliburton & frac w/87,500# 20/40 sd in 637 bbls Boragel @ avg rate 30 BPM @ 1420 psi. ISIP: 1793 psi, 5 min: 1216 psi, 10 min: 1008 psi. Flowback @ 1 BPM on 12/64" ck. Flow for 4 hrs, rec 195 bbls. SDFN. Est 620 BLWTBR.
DC: $2,715 TWC: $182,138

12/24/95 PO: Prep to frac. (Day 6)
Summary: 12/23/95 - SIP: 0 psi. TIH w/RBP & tbg, set plug @ 5242'. Tst plug to 3000 psi. Circ 1 sk sd on plug. RU swb, swb well dn to 4600'. TOH w/tbg. RU Atlas WL & **PERF "D" SD @ 5143-5160' W/4 JSPF.** RD WL. TIH w/tbg to 5161'. RU swb. IFL @ 4500'. Made 3 runs, rec 7 bbls, 100% wtr, 3rd run dry. FFL @ 5160'. SDFN. Est 504 BLWTBR.
DC: $3,940 TWC: $186,078

Attachment G-6

INLAND PRODUCTION COMPANY
SUNDANCE STATE #5-32
Daily Completion Report
SW/SE Sec. 32, T8S, R18E
Duchesne County, Utah
TD: 6919'
Srfce Spud Date: 6/15/95
Rotary Spud Date: 6/24/95
Comp Rig: Basin Well #3
API #43-047-32685
Page Two

12/25/95 SD for holiday.

12/26/95 SD for holiday.

12/27/95 PO: Prep for prod. (Day 7)
Summary: 12/26/96 - CP: 100 psi, TP: 0 psi. RU swb, IFL @ 4500'. Made 3 runs, rec 8 BW w/tr oil. FFL @ 5160'. TOH w/tbg. NU tree saver. RU Halliburton, frac "D" sd w/78,000# 20/40 sd in 551 bbls Boragel @ avg rate 26 BPM @ 1650 psi. ISIP: 1668 psi, 5 min: 1561 psi, 10 min: 1540 psi. Flowback @ 1 BPM on 12/64" ck. Flowed for 4 hrs, rec 195 bbls gelled wtr w/lt sd. SDFN. Est 852 BLWTBR.
DC: $21,155 TWC: $207,233

12/28/95 PO: Prep for prod. (Day 8)
Summary: 12/27/95 - SIP: 0 psi. TIH w/tbg & ret head, tag sd @ 4870'. Circ to RBP @ 5242'. Release plug & TIH w/RH & tbg, tag sd @ 5290'. Circ sd out to RBP @ 5454'. Release plug & TOH. TIH w/tbg & NC to 3150'. SDFN. Est 852 BLWTBR.
DC: $1,855 TWC: $209,088

12/29/95 PO: Prep for prod. (Day 9)
Summary: 12/28/95 - CP: 0 psi, TP: 0 psi. TIH tag sd @ 5929'. Circ sd out to PBTD @ 6185'. TOH w/tbg to 5970'. RU to swb. IFL @ surf. Made 22 swb runs, rec 204 bbls, 5% oil w/tr gas on last 4 runs. FFL 3800'. SDFN. Est 652 BLWTBR.
DC: $1,775 TWC: $209,863

12/30/95 PO: Prep for prod. (Day 10)
Summary: 12/29/95 - RU swb. IFL @ 1300'. Made 36 swb runs, rec 318 bbls fluid. IOC 30%, FOC 80% w/tr sd, good gas. FFL 2300'. Est recovery: 147 BLW - 171 BNO. SDFN. Est 505 BLWTBR.
DC: $1,730 TWC: $211,593

12/31/95 PO: Prep for prod. (Day 11)
Summary: 12/30/95 - TP: 200 psi, CP 300 psi. Blow dn gas press. RU swb. IFL @ 1300', made 15 runs, rec 138 bbls, 90% oil from all runs. FFL @ 2800'. RD swb. Pmp 30 bbls KCl wtr dn tbg to hold press. TIH tag sd @ 6180'. TOH w/tbg. TIH w/prod string as follows: NC, 3 jts 2-7/8" tbg, SN, 22 jts 2-7/8" tbg, TA, 162 jts 2-7/8" tbg. RD floor. ND BOP's, set tbg anchor w/13,000# tension. EOT @ 5896', SN @ 5805', AC @ 5113'. NU wellhead & flowlines. SDFN. Est 522 BLWTBR.
DC: $1,690 TWC: $213,283

1/1/96 SD for holiday.

1/2/96 SD for holiday.

ATTACHMENT H

WORK PROCEDURE FOR PLUGGING AND ABANDONMENT

1.	Plug #1	Set 160' plug from 5732'-5892' with 30 sxs Class "G" cement.
2.	Plug #2	Set 250' plug from 5220'-5470' with 30 sxs Class "G" cement.
3.	Plug #3	Set 167' plug from 5043'-5210' with 30 sxs Class "G" cement.
4.	Plug #4	Set 172' plug from 4766'-4938' with 30 sxs Class "G" cement.
5.	Plug #5	Set 200' plug from 2000'-2200' with 30 sxs Class "G" cement.
6.	Plug #6	Set 100' plug from 231'-331' (50' on either side of casing shoe) with 15 sxs Class "G" cement.
7.	Plug #7	Set 50' plug from surface with 10 sxs Class "G" cement.
8.		Pump 10 sxs Class "G" cement down the 8-5/8" x 5-1/2" annulus to cement 284' to surface.

The approximate cost to plug and abandon this well is $18,000.

Attachment H-1

Gilsonite State #5-32

Proposed P&A
Wellbore Diagram

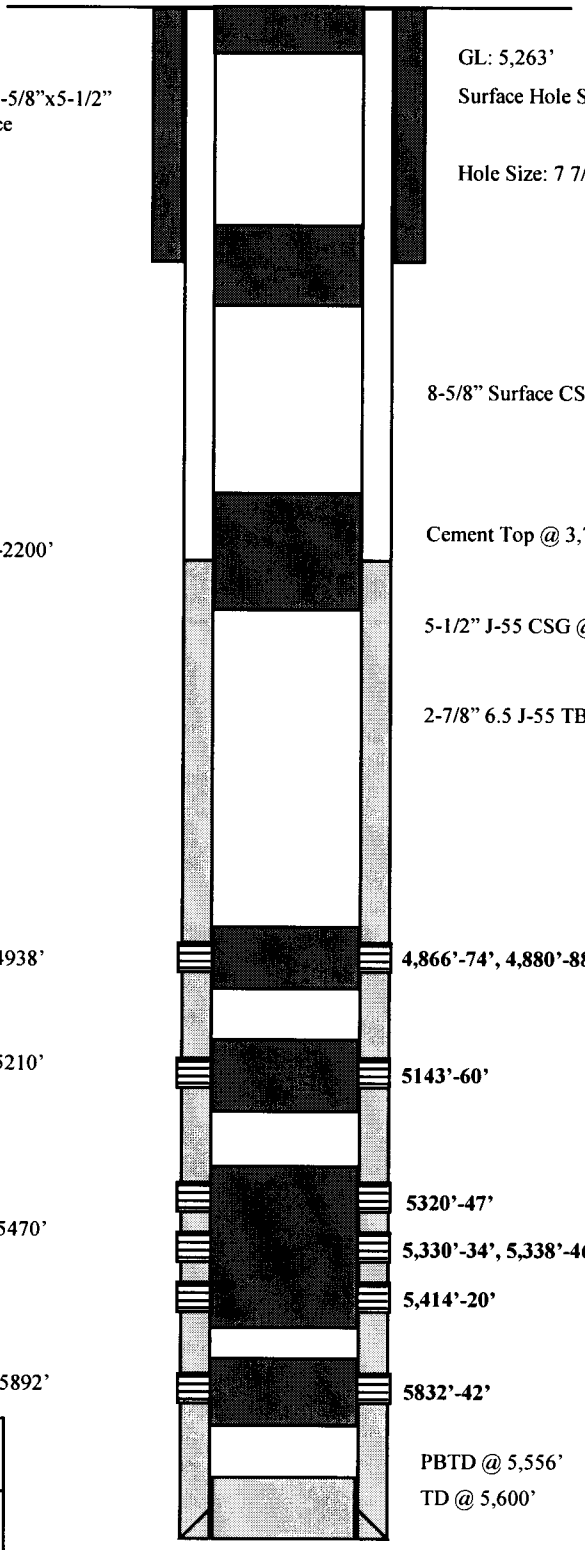

10 sx Class "G" cmt, 50' to surface

10 sx Class "G" cement down the 8-5/8"x5-1/2" annulus to cement 284' to surface

15 sx Class "G" cmt, 234'-334'

30 sx Class "G" cmt, 2000'-2200'

30 sx Class "G" cmt, 4766'-4938'

30 sx Class "G" cmt, 5043'-5210'

30 sx Class "G" cmt, 5220'-5470'

30 sx Class "G" cmt, 5732'-5892'

GL: 5,263'

Surface Hole Size: 12 1/4"

Hole Size: 7 7/8"

8-5/8" Surface CSG @ 284'

Cement Top @ 3,740'

5-1/2" J-55 CSG @ 5,600'

2-7/8" 6.5 J-55 TBG@ 4,927'

4,866'-74', 4,880'-88'

5143'-60'

5320'-47'

5,330'-34', 5,338'-46'

5,414'-20'

5832'-42'

PBTD @ 5,556'

TD @ 5,600'

Inland Resources Inc.

Gilsonite State #5-32

559 FWL 1937 FNL

SWNW Section 32-T8S-R17E

Duchesne Co, Utah

API #43-013-30714; Lease #ML-22060

State of Utah
DEPARTMENT OF NATURAL RESOURCES
DIVISION OF OIL, GAS AND MINING

Michael O. Leavitt
Governor
Ted Stewart
Executive Director
Lowell P. Braxton
Division Director

1594 West North Temple, Suite 1210
PO Box 145801
Salt Lake City, Utah 84114-5801
801-538-5340
801-359-3940 (Fax)
801-538-7223 (TDD)

May 12, 1998

Uintah Basin Standard
268 South 200 East
Roosevelt, Utah 84066-9998

Re: Notice of Agency Action - Cause No. UIC-215

Gentlemen:

Enclosed is a copy of the referenced Notice of Agency Action. Please publish the Notice, once only, as soon as possible. Please send proof of publication and billing to the Division of Oil, Gas and Mining, 1594 West North Temple, Suite 1210, P.O. Box 145801, Salt Lake City, Utah 84114-5801.

Sincerely,

Larraine Platt

Larraine Platt
Secretary

Enclosure

State of Utah
DEPARTMENT OF NATURAL RESOURCES
DIVISION OF OIL, GAS AND MINING

Michael O. Leavitt
Governor
Ted Stewart
Executive Director
Lowell P. Braxton
Division Director

1594 West North Temple, Suite 1210
PO Box 145801
Salt Lake City, Utah 84114-5801
801-538-5340
801-359-3940 (Fax)
801-538-7223 (TDD)

May 13, 1998

Newspaper Agency Corporation
Legal Advertising
PO Box 45838
Salt Lake City, Utah 84145

Re: Notice of Agency Action - Cause No. UIC-215

Gentlemen:

Enclosed is a copy of the referenced Notice of Agency Action. Please publish the Notice, once only, as soon as possible. Please send proof of publication and billing to the Division of Oil, Gas and Mining, 1594 West North Temple, Suite 1210, P.O. Box 145801, Salt Lake City, Utah 84114-5801.

Sincerely,

Larraine Platt

Larraine Platt
Secretary

Enclosure

State of Utah
DEPARTMENT OF NATURAL RESOURCES
DIVISION OF OIL, GAS AND MINING

1594 West North Temple, Suite 1210
PO Box 145801
Salt Lake City, Utah 84114-5801
801-538-5340
801-359-3940 (Fax)
801-538-7223 (TDD)

Michael O. Leavitt
Governor
Lowell P. Braxton
Division Director

June 24, 1998

Inland Production Company
475 Seventeenth Street, Suite 1500
Denver, Colorado 80202

Re: Gilsonite Unit Wells: Gilsonite State #1A-32, #1-32 and #5-32, Section 32, Township 9 South, Range 17 East, Duchesne County, Utah

Gentlemen:

Pursuant to Utah Admin. Code R649-5-3-3, the Division of Oil, Gas and Mining (the "Division") issues its administrative approval for conversion of the referenced wells to Class II injection wells. Accordingly, the following stipulations shall apply for full compliance with this approval:

1. Compliance with all applicable requirements for the operation, maintenance and reporting for Underground Injection Control ("UIC") Class II injection wells pursuant to Utah Admin. Code R649-1 et seq.

2. Conformance with all conditions and requirements of the complete application submitted by Inland Production Company.

3. A casing\tubing pressure test shall be conducted prior to commencing injection.

If you have any questions regarding this approval or the necessary requirements, please contact Brad Hill or Dan Jarvis at this office.

Sincerely,

Steven L. Schneider
for John R. Baza
Associate Director, Oil and Gas

cc: Dan Jackson, Environmental Protection Agency
Bureau of Land Management, Vernal
Inland Production Company, Roosevelt

DIVISION OF OIL, GAS AND MINING
UNDERGROUND INJECTION CONTROL PROGRAM

PERMIT
STATEMENT OF BASIS

Applicant: Inland Production Company **Well:** Gilsonite State #5-32

Location: 32/8S/17E **API:** 43-013-30714

Ownership Issues: The proposed well is located on State land. The well is located in the Gilsonite Unit. Lands in the one-half mile radius of the well are administered by the BLM and the State of Utah, School and Institutional Trust Lands Administration (SITLA). The Federal Government and SITLA are the mineral owners within the area of review. Inland and other various individuals hold the leases in the unit. Inland has provided a list of all surface, mineral and lease holders in the half-mile radius. Inland will be the operator of the Gilsonite Unit. Inland has submitted an affidavit stating that all owners and interest owners have been notified of their intent.

Well Integrity: The proposed well has surface casing set at 284 feet and has a cement top at the surface. A 5 ½ inch production casing is set at 5600 feet and has a cement top at 3740 feet. A cement bond log verifies adequate bond well above the injection zone. A 2 7/8 inch tubing with a packer will be set at 4816 feet. A mechanical integrity test will be run on the well prior to injection. There are 9 producing wells and 1 water injection well in the area of review. All of the wells have adequate casing and cement. No corrective action will be required.

Ground Water Protection: According to Technical Publication No. 92 the base of moderately saline water is at a depth of approximately 200 feet. Injection shall be limited to the interval between 4866 feet and 5842 feet in the Green River Formation. Information submitted by Inland indicates that the fracture gradient for the #5-32 well is .76 psi/ft., which was the lowest reported fracture gradient for the injection zone. The resulting minimum fracture pressure for the proposed injection interval is 1671 psig. The requested maximum pressure is 1671 psig. The anticipated average injection pressure is 1100 psig. Injection at this pressure should not initiate any new fractures or propagate existing fractures in the adjacent confining intervals. Any ground water present should be adequately protected.

Oil/Gas& Other Mineral Resources Protection: The Board of Oil, Gas & Mining approved the Gilsonite Unit on April 6, 1993. Correlative rights issues were addressed at this time. Previous reviews in this area indicate that other mineral resources in the area have been protected or are not at issue.

Bonding: Bonded with the State of Utah

Actions Taken and Further Approvals Needed: A notice of agency action has been sent to the Salt Lake Tribune and the Uinta Basin Standard. A casing/tubing pressure test will be required prior to injection. It is recommended that Administrative approval of this application be granted.

Note: Applicable technical publications concerning water resources in the general vicinity of this project have been reviewed and taken into consideration during the permit review process.

Reviewer(s): Brad Hill Date: 6/24/98

BEFORE THE DIVISION OF OIL, GAS AND MINING
DEPARTMENT OF NATURAL RESOURCES
STATE OF UTAH

---ooOoo---

IN THE MATTER OF THE APPLICATION OF INLAND PRODUCTION COMPANY FOR ADMINISTRATIVE APPROVAL OF THE GILSONITE STATE 1-32, 5-32 AND 1A-32 WELLS LOCATED IN SECTION 32, TOWNSHIP 8 SOUTH, RANGE 17 EAST, S.L.M., DUCHESNE COUNTY, UTAH, AS CLASS II INJECTION WELLS	:	NOTICE OF AGENCY ACTION CAUSE NO. UIC-215

---ooOoo---

THE STATE OF UTAH TO ALL PERSONS INTERESTED IN THE ABOVE ENTITLED MATTER.

Notice is hereby given that the Division of Oil, Gas and Mining (the "Division") is commencing an informal adjudicative proceeding to consider the application of Inland Production Company for administrative approval of the Gilsonite State 1-32, 5-32 and 1A-32 wells, located in Section 32, Township 8 South, Range 17 East, S.L.M., Duchesne County, Utah, for conversion to Class II injection wells. The proceeding will be conducted in accordance with Utah Admin. R.649-10, Administrative Procedures.

The Green River Formation will be selectively perforated for water injection. The maximum injection pressure and rate will be determined on each individual well based on fracture gradient information submitted by Inland Production Company.

Any person desiring to object to the application or otherwise intervene in the proceeding, must file a written protest or notice of intervention with the Division within fifteen days following publication of this notice. If such a protest or notice of intervention is received, a hearing will be scheduled before the Board of Oil, Gas and Mining. Protestants and/or intervenors should be prepared to demonstrate at the hearing how this matter affects their interests.

Dated this 13th day of May 1998.

STATE OF UTAH
DIVISION OF OIL, GAS & MINING

John R. Baza

John R. Baza
Associate Director

Inland Production Company
Gilsonite State 1-32, 5-32 and 1A-32 Well
Cause No. UIC-215

Publication Notices were sent to the following:

Inland Production Company
410 17th Street, Suite 700
Denver, Colorado 80202

Newspaper Agency Corporation
Legal Advertising
P.O. Box 45838
Salt Lake City, Utah 84145

Uintah Basin Standard
268 South 200 East
Roosevelt, Utah 84066

Vernal District Office
Bureau of Land Management
170 South 500 East
Vernal, Utah 84078

U.S. Environmental Protection Agency
Region VIII
Attn. Dan Jackson
999 18th Street
Denver, Colorado 80202-2466

School & Institutional Trust Lands Administration
Attn: Jim Cooper
675 East 500 South
Salt Lake City, Utah 84102

Larraine Platt

Larraine Platt
Secretary
May 13, 1998

FORM 3160-5
(June 1990)

UNITED STATES
DEPARTMENT OF THE INTERIOR
BUREAU OF LAND MANAGEMENT

FORM APPROVED
Budget Bureau No. 1004-0135
Expires: March 31, 1993

SUNDRY NOTICES AND REPORTS ON WELLS

Do not use this form for proposals to drill or to deepen or reentry a different reservoir.
Use "APPLICATION FOR PERMIT -" for such proposals

SUBMIT IN TRIPLICATE

5. Lease Designation and Serial No.
ML-22060

6. If Indian, Allottee or Tribe Name
NA

7. If Unit or CA, Agreement Designation
NA

1. Type of Well
[X] Oil Well [ ] Gas Well [ ] Other

8. Well Name and No.
STATE 5-32

9. API Well No.
43-013-30714

2. Name of Operator
INLAND PRODUCTION COMPANY

10. Field and Pool, or Exploratory Area
MONUMENT BUTTE

3. Address and Telephone No.
475 17TH STREET, SUITE 1500, DENVER, COLORADO 80202 (303) 292-0900

11. County or Parish, State
DUCHESNE COUNTY, UTAH

4. Location of Well (Footage, Sec., T., R., m., or Survey Description)
1937 FNL 0559 FWL SW/NW Section 32, T08S R17E

12. CHECK APPROPRIATE BOX(s) TO INDICATE NATURE OF NOTICE, REPORT, OR OTHER DATA

TYPE OF SUBMISSION	TYPE OF ACTION	
[ ] Notice of Intent	[ ] Abandonment	[ ] Change of Plans
[X] Subsequent Report	[ ] Recompletion	[ ] New Construction
[ ] Final Abandonment Notice	[ ] Plugging Back	[ ] Non-Routine Fracturing
	[ ] Casing Repair	[ ] Water Shut-Off
	[ ] Altering Casing	[ ] Conversion to Injection
	[X] Other Site Security	[ ] Dispose Water

(Note: Report results of multiple completion on Well Completion or Recompletion Report and Log form.)

13. Describe Proposed or Completed Operations (Clearly state all pertinent details, and give pertinent dates, including estimated date of starting any proposed work. If well is directionally drilled, give subsurface locations and measured and true vertical depths for all markers and zones pertinent to this work.)*

Attached please find the site security diagram for the above referenced well.

RECEIVED
NOV 02 1998
DIV. OF OIL, GAS & MINING

14. I hereby certify that the foregoing is true and correct
Signed Debbie E. Knight Title Manager, Regulatory Compliance Date 10/30/98

(This space for Federal or State office use)
Approved by _____ Title _____ Date _____
Conditions of approval, if any:
CC: UTAH DOGM

Title 18 U.S.C. Section 1001, makes it a crime for any person knowingly and willfully to make to any department or agency of the United States any false, fictitious or fradulent statements or representations as to any matter within its jurisdiction.

Inland Production Company
Site Facility Diagram

Gilsonite State 5-32

SW/NW Sec. 32, T8S, 17E

Duchesne County

Sept. 17, 1998

Site Security Plan is held at the Roosevelt Office, Roosevelt Utah

Production Phase:

1) Valves 1, 3, 4 sealed closed
2) Valves 2 and 5 sealed open

Sales Phase:

1) Valves 1, 2, 4, 5 sealed closed
2) Valves 3 open

Draining Phase:

1) Valve 1 open

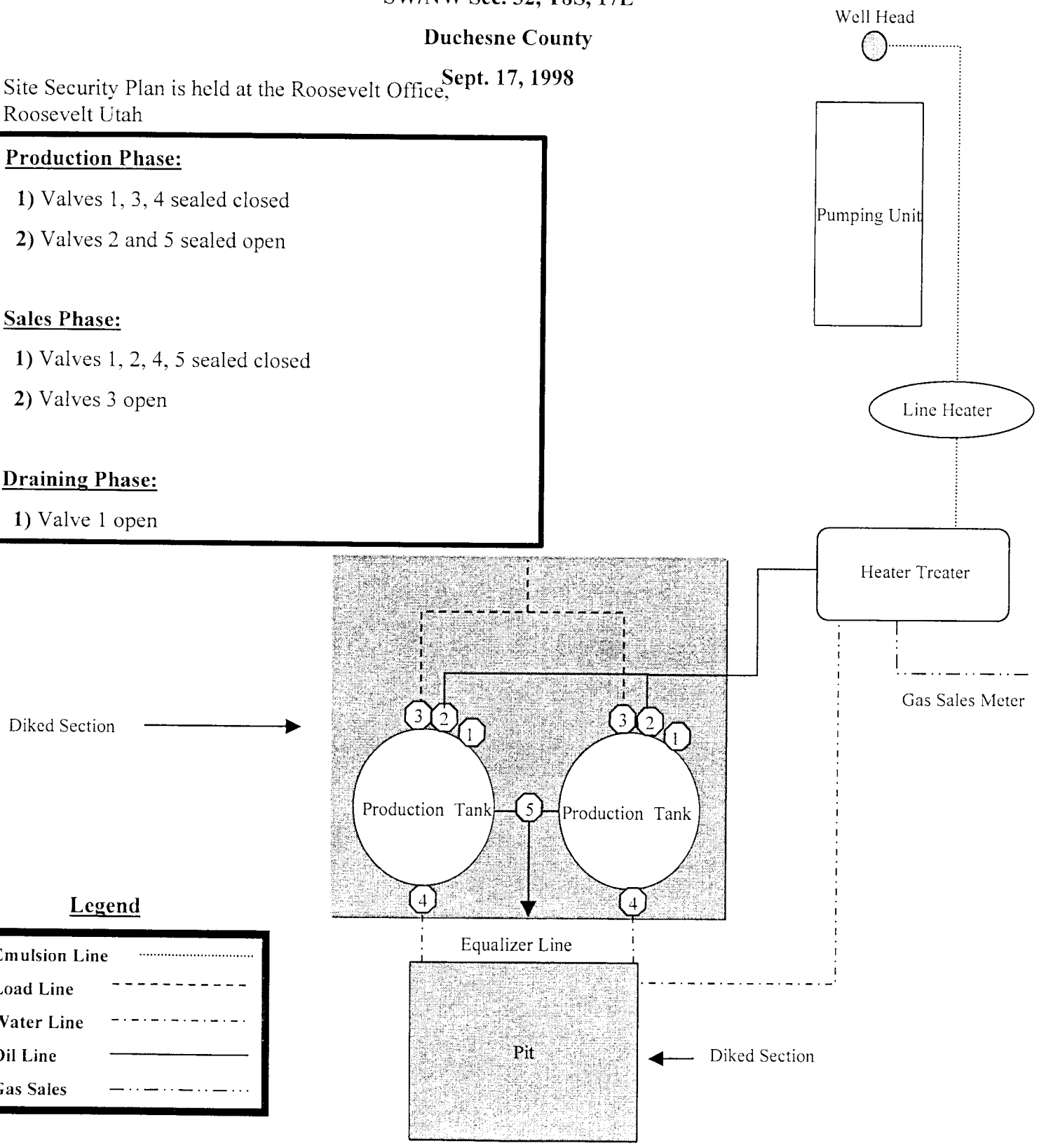

Inland
PRODUCTION COMPANY
A Subsidiary of Inland Resources Inc.

October 16, 2000

State of Utah
Division of Oil, Gas & Mining
1594 West North Temple - Suite 1210
P.O. Box 145801
Salt Lake City, Utah 84114-5801

To Whom It May Concern:

Enclosed is a sundry notice on the State 5-32 well. If you have any questions or need further information, please let me know.

Sincerely,

Martha Hall

Martha Hall
Office Manager

/mh
Enclosures

cc: Bureau of Land Management
Denver office well file
Well file
Bob Jewett, Denver office

Inland Production Company Field Office • Route 3, Box 3630 • Myton, UT 84052 • 435-646-3721 • FAX 435-646-3031
Corporate Office • 410 Seventeenth Street, Suite 700 • Denver, CO 80202 • 303-893-0102 • FAX 303-893-0103

DOGM Form 5
Mar. 5, 1987

STATE OF UTAH
DEPARTMENT OF NATURAL RESOURCES
DIVISION OF OIL, GAS, AND MINING

5. LEASE DESIGNATION AND SERIAL NO.
ML-22060

1. **SUNDRY NOTICES AND REPORTS ON WELLS**

(Do not use this form for proposals to drill or to deepen or plug back to a different reservoir.
Use "APPLICATION FOR PERMIT--" for such proposals.)

6. IF INDIAN, ALLOTTEE OR TRIBAL NAME
N/A

OIL WELL [ ] GAS WELL [ ] OTHER [X] **INJECTOR**

7. UNIT AGREEMENT NAME
GILSONITE

2. NAME OF OPERATOR
INLAND PRODUCTION COMPANY

8. FARM OR LEASE NAME
STATE 5-32

3. ADDRESS OF OPERATOR
Rt. 3 Box 3630, Myton Utah 84052
435-646-3721

9. WELL NO.
5-32

4. LOCATION OF WELL (Report location clearly and in accordance with any State requirements.*
See also space 17 below.)
At surface
SW/NW 1937 FNL 0559 FWL

10 FIELD AND POOL, OR WILDCAT
MONUMENT BUTTE

11 SEC., T., R., M., OR BLK. AND SURVEY OR AREA
SW/NW Section 32, T08S R17E

14 API NUMBER	15. ELEVATIONS (Show whether DF, RT, GR, etc.)	12 COUNTY OR PARISH	13 STATE
43-013-30714	**5263 GR**	**DUCHESNE**	**UT**

16. **Check Appropriate Box To Indicate Nature of Notice, Report, or Other Data**

NOTICE OF INTENTION TO:				SUBSEQUENT REPORT OF:			
TEST WATER SHUT-OFF	[ ]	PULL OR ALTER CASING	[ ]	WATER SHUT-OFF	[ ]	REPAIRING WELL	[ ]
FRACTURE TREAT	[ ]	MULTIPLE COMPLETE	[ ]	FRACTURE TREATMENT	[ ]	ALTERING CASING	[ ]
SHOOT OR ACIDIZE	[ ]	ABANDON*	[ ]	SHOOTING OR ACIDIZING	[ ]	ABANDONMENT*	[ ]
REPAIR WELL	[ ]		[ ]	(OTHER) **INJECTION CONVERSION**			[X]
(OTHER)			[ ]	(Note: Report results of multiple completion on Well Completion or Recompletion Report and Log form.)			

17 DESCRIBE PROPOSED OR COMPLETED OPERATIONS. (Clearly state all pertinent details, and give pertinent dates, including estimated date of starting any proposed work. If well is directionally drilled, give subsurface locations and measured and true vertical depths for all markers and zones pertinent to this work.)*

The subject well was converted from a production to an injection well on 10/14/00. The rods and tubing anchor were removed and a packer was inserted in the bottom hole assembly at 4793'.

18 I hereby certify that the foregoing is true and correct
SIGNED Martha Hall TITLE Office Manager DATE 10/16/00
Martha Hall

(This space for Federal or State office use)
APPROVED BY_____ TITLE_____ DATE_____
CONDITIONS OF APPROVAL, IF ANY:

*** See Instructions On Reverse Side**

INSPECTION FORM 6

STATE OF UTAH
DIVISION OF OIL GAS AND MINING

INJECTION WELL - PRESSURE TEST

Well Name: Gilsonite State 5-32 API Number: 43-013-30714

Qtr/Qtr: SW/NW Section: 32 Township: 8S Range: 17E

Company Name: Inland Production Company

Lease: State ML-22060 Fee _____ Federal _____ Indian _____

Inspector: Dennis L Ingram Date: 10/17/00

Initial Conditions:

Tubing - Rate: _____ Pressure: 320 psi

Casing/Tubing Annulus - Pressure: 1090 psi

Conditions During Test:

Time (Minutes)	Annulus Pressure	Tubing Pressure
0	1090	320
5	1090	320
10	1090	320
15	1090	320
20	1090	320
25	1090	320
30	1090	320

Results: Pass/Fail

Conditions After Test:

Tubing Pressure: 320 psi

Casing/Tubing Annulus Pressure: 1090 psi

COMMENTS: Tested for conversion/POW to WIW. Also Recorded on Chart.

Ron Shuck
Operator Representative

Inland
PRODUCTION COMPANY
A Subsidiary of Inland Resources Inc.

October 18, 2000

Division Oil and Gas & Mining
Attn: Mr. Brad Hill
1594 West North Temple – Suite 1210
P. O. Box 145801
Salt Lake City, Utah 84114-5801

RE: Gilsonite State 5-32-8-17
API # 43-013-30714, ML-22060

Dear Mr. Brad Hill

Please find enclosed the results of a MIT test conducted today on the above referenced well. Mr. Dennis Ingram was notified and witnessed the test. On 10-17-00 there was 1090 psi put on casing with 320 psi on tubing there was no loss of pressure charted in a ½ hour test.

If you have any questions or need further information, please don't hesitate to contact me. I can be reached at our Pleasant Valley Office at (435) 646-3721 or on my cellular at (435) 823-7977.

Sincerely,

Ron Shuck
Production Foreman

Enclosures

cc: State of Utah – Division of Oil, Gas & Mining
Jon Holst - Inland Resources
Roosevelt & Denver Well Files

/rs

Inland Production Company Field Office • Route 3, Box 3630 • Myton, UT 84052 • 435-646-3721 • FAX 435-646-3031
Corporate Office • 410 Seventeenth Street, Suite 700 • Denver, CO 80202 • 303-893-0102 • FAX 303-893-0103

DOGM Form 5
May 5, 1987

STATE OF UTAH
DEPARTMENT OF NATURAL RESOURCES
DIVISION OF OIL, GAS, [illegible]

5. LEASE DESIGNATION AND SERIAL NO
ML-22060

1. **SUNDRY NOTICES AND REPORTS ON WELLS**

(Do not use this form for proposals to drill or to deepen or plug back to a different reservoir. Use "APPLICATION FOR PERMIT--" for such proposals.)

6. IF INDIAN, ALLOTTEE OR TRIBAL NAME
N/A

OIL WELL [ ] GAS WELL [ ] OTHER [X] Injection Well

7. UNIT AGREEMENT NAME
GILSONITE

2. NAME OF OPERATOR
INLAND PRODUCTION COMPANY

8. FARM OR LEASE NAME
STATE 5-32

3. ADDRESS OF OPERATOR
RT 3 Box 3630 Myton Ut 84052
(435) 646-3721

9. WELL NO.
5-32-8-17

4. LOCATION OF WELL (Report location clearly and in accordance with any State requirements.* See also space 17 below.)
At surface
SW/NW 1937 FNL 0559 FWI.

10 FIELD AND POOL, OR WILDCAT
MONUMENT BUTTE

11 SEC., T., R., M., OR BLK. AND SURVEY OR AREA
SW/NW Section 32, T08S R17E

14 API NUMBER
43-013-30714

15. ELEVATIONS (Show whether DF, RT, GR, etc.)
5263 GR

12 COUNTY OR PARISH
DUCHESNE

13 STATE
UT

16. **Check Appropriate Box To Indicate Nature of Notice, Report, or Other Data**

NOTICE OF INTENTION TO:				SUBSEQUENT REPORT OF:			
TEST WATER SHUT-OFF	[ ]	PULL OR ALTER CASING	[ ]	WATER SHUT-OFF	[ ]	REPAIRING WELL	[ ]
FRACTURE TREAT	[ ]	MULTIPLE COMPLETE	[ ]	FRACTURE TREATMENT	[ ]	ALTERING CASING	[ ]
SHOOT OR ACIDIZE	[ ]	ABANDON*	[ ]	SHOOTING OR ACIDIZING	[ ]	ABANDONMENT*	[ ]
REPAIR WELL	[ ]		[ ]	(OTHER) **Injection conversion**			[X]
(OTHER)			[X]	(Note: Report results of multiple completion on Well Completion or Recompletion Report and Log form.)			

17 DESCRIBE PROPOSED OR COMPLETED OPERATIONS. (Clearly state all pertinent details, and give pertinent dates, including estimated date of starting any proposed work. If well is directionally drilled, give subsurface locations and measured and true vertical depths for all markers and zones pertinent to this work.)*

On 10-15-00 Inland Production converted the above reference well from a production well to a injection well. On 10-17-00 a MIT was conducted on the casing that Mr. Dennis Ingram with the State of Utah witnessed. The casing was pressured to 1090 psi with 320 psi on the tubing no loss of pressure was charted in a 1/2 hour test. The pressure was then released and the well is shut-in waiting on permission to inject.

18 I hereby certify that the foregoing is true and correct

SIGNED Ron Shuck TITLE Production Foreman DATE 10/18/00
Ron Shuck

(This space for Federal or State office use)

APPROVED BY _____ TITLE _____ DATE _____

CONDITIONS OF APPROVAL, IF ANY:

*** See Instructions On Reverse Side**

Inland RESOURCES INC.

DAILY WORKOVER REPORT

WELL NAME: GS 5-32-8-17 **Report Date:** 10-18-00 **Completion Day:** 04

Operation: MIT Casing **Rig:** Basin # 3

WELL STATUS

Surf Csg:	8 5/8	@	284'	Prod Csg:	5 1/2"	@	6037'	WT: 17 #	Csg PBTD: 6037'
Tbg:	Size:	2 7/8"	Wt:	6.5 #	Grd:	J-55	PKR/EOT @	4790'	BP/Sand PBTD: 5526'

PERFORATION RECORD

Zone	Perfs	SPF/#shots	Zone	Perfs	SPF/#shots
	4866 - 4874'	4 shots		5346 - 5347'	4/4
	4880 - 4888'	9 shots		5414 - 5420'	2/12
	5143 - 5160'	4/68		5832 - 5842'	4/40
	5320 - 5330'	4/40			
	5334 - 5338'	4/16			

CHRONOLOGICAL OPERATIONS

Date Work Performed: 17-Oct-00 **SITP:** _____ **SICP:** _____

Contacted Al Craver with the EPA and got verbal approval to conduct test without witness. Contacted Dennis Ingram with the State of Utah (DOGM) who witnessed the test and set time up for 10:00 AM. Pressured casing to 1090 psi with 320 psi on tubing. Charted no loss of pressure in 1/2 hour test. The pressure was then released. The well is shut-in waiting on permission to start injecting.

FLUID RECOVERY (BBLS)

Starting fluid load to be recovered:	0	Starting oil rec to date:	
Fluid lost/recovered today:	0	Oil lost/recovered today:	
Ending fluid to be recovered:	0	Cum oil recovered:	

IFL: _____ **FFL:** _____ **FTP:** _____ **Choke:** _____ **Final Fluid Rate:** _____ **Final oil cut:** _____

TUBING DETAIL	ROD DETAIL	COSTS	
EOT @ 4796.26'	N/A		
COE @ 4793.26'	Injector		
SN @ 4790.06'			
152 jtd tbg 4788.96'			
KB 10.00'			

DAILY COST: _____

Workover Supervisor: Ron Shuck **TOTAL WELL COST:** _____

Mechanical Integrity Test
Casing or Annulus Pressure Mechanical Integrity Test

U.S. Environmental Protection Agency
Underground Injection Control Program, UIC Direct Implementation Program 8P-W-GW
999 18th Street, Suite 500 Denver, CO 80202-2466

EPA Witness: None Date: 10/17/00
Test conducted by: Ron Shunk & Brent Cook
Others present: Dennis Ingram

Well Name: Gilsonite State 5-32-8-17 Type: (ER) SWD Status: AC TA (UC)
Field: Gilsonite Unit UT 2633-04468
Location: SW/NW Sec: 32 T 8 N/(S) R 17 (E)/W County: Duchesne State: UT
Operator: Inland Production
Last MIT: / / Maximum Allowable Pressure: PSIG

Is this a regularly scheduled test? [ ] Yes [X] No

Initial test for permit? [X] Yes [ ] No

Test after well rework? [X] Yes [ ] No

Well injecting during test? [ ] Yes [X] No If Yes, rate: bpd

Pre-test casing/tubing annulus pressure: ~~[illegible]~~ 1090 csg 320 Tbg psig

MIT DATA TABLE	Test #1	Test #2	Test #3
TUBING	*PRESSURE*		
Initial Pressure	320 T psig	psig	psig
End of test pressure	320 psig	psig	psig
CASING / TUBING	*ANNULUS*	*PRESSURE*	
10:36 AM 0 minutes	1090 psig	psig	psig
5 minutes	1090 psig	psig	psig
10 minutes	1090 psig	psig	psig
15 minutes	1090 psig	psig	psig
20 minutes	1090 psig	psig	psig
25 minutes	1090 psig	psig	psig
30 minutes	1090 psig	psig	psig
minutes	1090 psig	psig	psig
11:06 AM minutes	psig	psig	psig
RESULT	[X] Pass [ ] Fail	[ ] Pass [ ] Fail	[ ] Pass [ ] Fail

Does the annulus pressure build back up after the test ? [ ] Yes [ ] No

MECHA_CAL INTEGRITY PRES_URE TEST

Additional comments for mechanical integrity pressure test, such as volume of fluid added to annulus and bled back at end of test, reason for failing test (casing head leak, tubing leak, other), etc.:

This was a Prod. well and Inland Production Converted
the well to Injection on 10-15-00.
This is a test on Casing.

Signature of Witness: [signature]

OFFICE USE ONLY - COMPLIANCE FOLLOWUP

Staff _____ Date: ___/___/___

Do you agree with the reported test results? [ ] YES [ ] NO

If not, why? _____

Possible violation identified? [ ] YES [ ] NO

If YES, what _____

If YES - followup initiated? [ ] YES _____

[ ] NO - why not? _____

[ ] Data Entry [ ] Compliance Staff [ ] 2nd Data Entry [ ] Hardcopy Filing

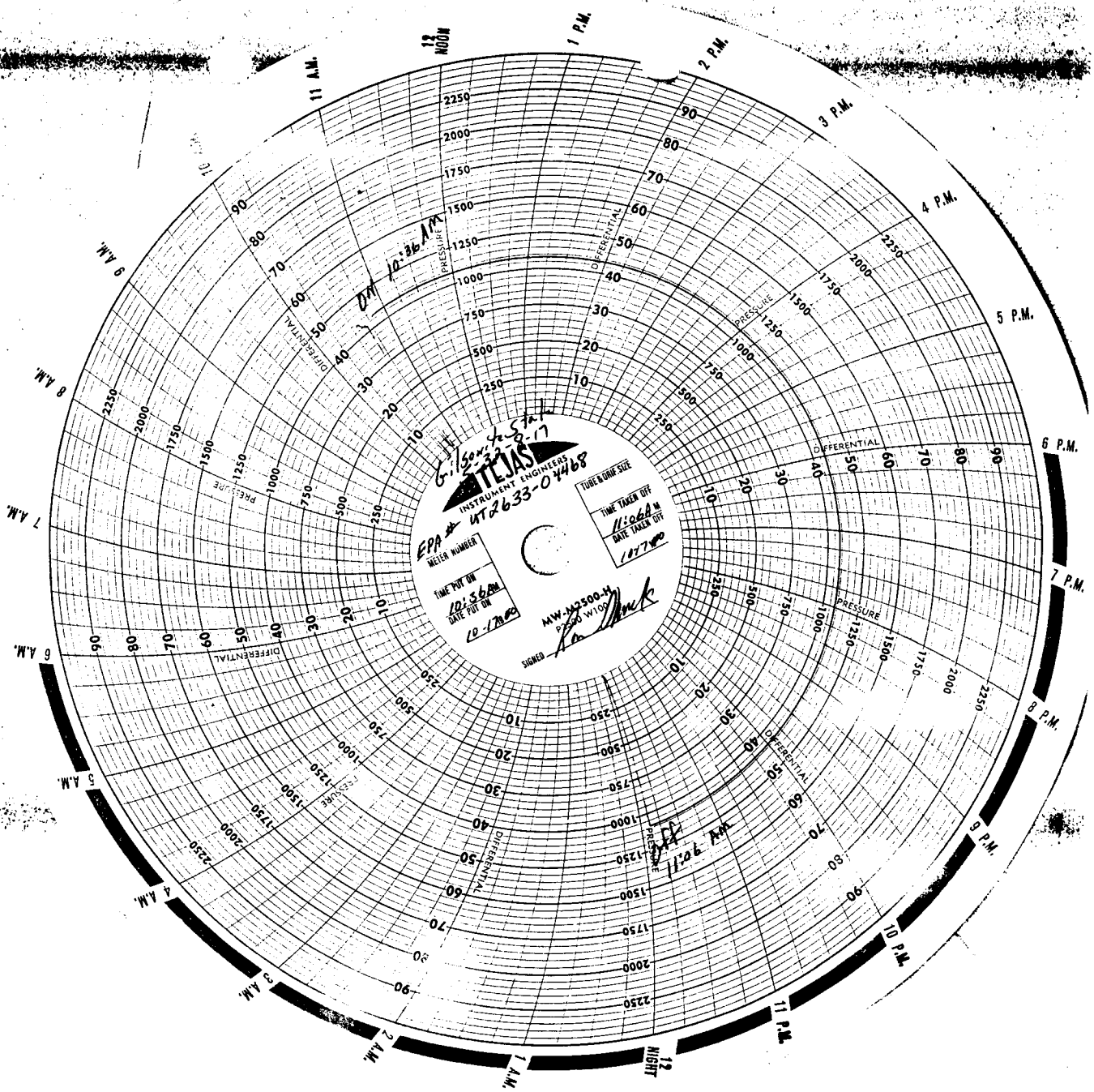
TEJAS
INSTRUMENT ENGINEERS
METER NUMBER
TIME PUT ON
DATE PUT ON
TIME TAKEN OFF
DATE TAKEN OFF
TUBE & ORIFICE SIZE
SIGNED
PRESSURE
DIFFERENTIAL
12 NOON
1 P.M.
2 P.M.
3 P.M.
4 P.M.
5 P.M.
6 P.M.
7 P.M.
8 P.M.
9 P.M.
10 P.M.
11 P.M.
12 NIGHT
1 A.M.
2 A.M.
3 A.M.
4 A.M.
5 A.M.
6 A.M.
7 A.M.
8 A.M.
9 A.M.
10 A.M.
11 A.M.

DOGM Form 5
May 5, 1987

STATE OF UTAH
DEPARTMENT OF NATURAL RESOURCES
DIVISION OF OIL, GAS, AND MINING

5. LEASE DESIGNATION AND SERIAL NO.
ML-22060

1. **SUNDRY NOTICES AND REPORTS ON WELLS**

(Do not use this form for proposals to drill or to deepen or plug back to a different reservoir.
Use "APPLICATION FOR PERMIT--" for such proposals.)

6. IF INDIAN, ALLOTTEE OR TRIBAL NAME
N/A

OIL WELL [ ] GAS WELL [ ] OTHER [X] **INJECTOR**

7. UNIT AGREEMENT NAME
GILSONITE

2. NAME OF OPERATOR
INLAND PRODUCTION COMPANY

8. FARM OR LEASE NAME
STATE 5-32

3. ADDRESS OF OPERATOR
Rt. 3 Box 3630, Myton Utah 84052
435-646-3721

9. WELL NO.
5-32

4. LOCATION OF WELL (Report location clearly and in accordance with any State requirements.*
See also space 17 below.)
At surface
SW/NW 1937 FNL 0559 FWL

10 FIELD AND POOL, OR WILDCAT
MONUMENT BUTTE

11 SEC., T., R., M., OR BLK. AND SURVEY OR AREA
SW/NW Section 32, T08S R17E

14 API NUMBER
43-013-30714

15. ELEVATIONS (Show whether DF, RT, GR, etc.)
5263 GR

12 COUNTY OR PARISH
DUCHESNE

13 STATE
UT

16. **Check Appropriate Box To Indicate Nature of Notice, Report, or Other Data**

NOTICE OF INTENTION TO:				SUBSEQUENT REPORT OF:			
TEST WATER SHUT-OFF	[ ]	PULL OR ALTER CASING	[ ]	WATER SHUT-OFF	[ ]	REPAIRING WELL	[ ]
FRACTURE TREAT	[ ]	MULTIPLE COMPLETE	[ ]	FRACTURE TREATMENT	[ ]	ALTERING CASING	[ ]
SHOOT OR ACIDIZE	[ ]	ABANDON*	[ ]	SHOOTING OR ACIDIZING	[ ]	ABANDONMENT*	[ ]
REPAIR WELL	[ ]		[ ]	(OTHER)	REPORT OF FIRST INJECTION		[X]
(OTHER)			[ ]	(Note: Report results of multiple completion on Well Completion or Recompletion Report and Log form.)			

17 DESCRIBE PROPOSED OR COMPLETED OPERATIONS. (Clearly state all pertinent details, and give pertinent dates, including estimated date of starting any proposed work. If well is directionally drilled, give subsurface locations and measured and true vertical depths for all markers and zones pertinent to this work.)*

The above referenced well was put on injection at 2:00 p.m. on 11/21/00.

18 I hereby certify that the foregoing is true and correct
SIGNED Martha Hall TITLE Office Manager DATE 11/21/00
Martha Hall

cc: BLM

(This space for Federal or State office use)
APPROVED BY _____ TITLE _____ DATE _____
CONDITIONS OF APPROVAL, IF ANY:

*** See Instructions On Reverse Side**

State of Utah
DEPARTMENT OF NATURAL RESOURCES
DIVISION OF OIL, GAS AND MINING

Michael O. Leavitt
Governor
Kathleen Clarke
Executive Director
Lowell P. Braxton
Division Director

1594 West North Temple, Suite 1210
PO Box 145801
Salt Lake City, Utah 84114-5801
801-538-5340
801-359-3940 (Fax)
801-538-7223 (TDD)

UNDERGROUND INJECTION CONTROL PERMIT

Cause No. UIC-215

Operator: Inland Production Company

Well: State 5-32-8-17

Location: Section 32, Township 8 South, Range 17 East

County: Duchesne

API No.: 43-013-30714

Well Type: Enhanced Recovery (waterflood)

Stipulations of Permit Approval

1. Approval for conversion to Injection Well issued on June 24, 1998.
2. Maximum Allowable Injection Pressure: 1671 psig
3. Maximum Allowable Injection Rate: (restricted by pressure limitation)
4. Injection Interval: Green River Formation (4866 feet - 5842 feet)

Approved by: John R. Baza
Associate Director, Oil And Gas

10/30/2000
Date

cc: Dan Jackson Environmental Protection Agency
Bureau of Land Management, Vernal
Inland Production Company, Myton
SITLA, Salt Lake City

INSPECTION FORM 6

STATE OF UTAH
DIVISION OF OIL GAS AND MINING

INJECTION WELL - PRESSURE TEST

Well Name: Gilsonite St 15-32-8-17 API Number: 43-013-31584

Qtr/Qtr: SW/SE Section: 32 Township: 8S Range: 17E

Company Name: Inland Production Company

Lease: State ML-22060 Fee ____ Federal ____ Indian ____

Inspector: Dennis L Ingram Date: 06-14-01

Initial Conditions:

Tubing - Rate: ____ Pressure: 1315 psi

Casing/Tubing Annulus - Pressure: 1035 psi

Conditions During Test:

Time (Minutes)	Annulus Pressure	Tubing Pressure
0	1035	1315
5	1035	1315
10	1035	1315
15	1035	1315
20	1035	1315
25	1035	1315
30	1035	1315

Results: Pass/Fail

Conditions After Test:

Tubing Pressure: 1315 psi

Casing/Tubing Annulus Pressure: 1035 psi

COMMENTS: TESTED 5 year rule. Injecting @ 34.7 BPD & 1315 PSI.

Bret Henrie
Operator Representative

FORM 9

STATE OF UTAH

DIVISION OF OIL, GAS, AND MINING

5. LEASE DESIGNATION AND SERIAL NO.
ML-22060

1. **SUNDRY NOTICES AND REPORTS ON WELLS**

Do not use this form for proposals to drill new wells, deepen existing wells, or to reenter plugged and abandoned wells.
Use "APPLICATION FOR PERMIT TO DRILL OR DEEPEN form for such proposals.

6. IF INDIAN, ALLOTTEE OR TRIBAL NAME
N/A

OIL WELL [ ] GAS WELL [ ] OTHER [X] **Injection Well**

7. UNIT AGREEMENT NAME
GILSONITE

2. NAME OF OPERATOR
INLAND PRODUCTION COMPANY

8. WELL NAME and NUMBER
STATE 5-32

3. ADDRESS AND TELEPHONE NUMBER
Rt. 3 Box 3630, Myton Utah 84052
435-646-3721

9 API NUMBER
43-013-30714

4. LOCATION OF WELL

Footages **1937 FNL 0559 FWL**

QQ, SEC, T, R, M: **SW/NW Section 32, T08S R17E**

10 FIELD AND POOL, OR WILDCAT
MONUMENT BUTTE

OUNTY **DUCHESNE**
STATE **UTAH**

11. **CHECK APPROPRIATE BOXES TO INDICATE NATURE OF NOTICE, REPORT OR OTHER DATA**

NOTICE OF INTENT:
(Submit in Duplicate)

[ ] ABANDON
[ ] NEW CONSTRUCTION
[ ] REPAIR CASING
[ ] PULL OR ALTER CASING
[ ] CHANGE OF PLANS
[ ] RECOMPLETE
[ ] CONVERT TO INJECTION
[ ] REPERFORATE
[ ] FRACTURE TREAT OR ACIDIZE
[ ] VENT OR FLARE
[ ] MULTIPLE COMPLETION
[ ] WATER SHUT OFF
[ ] OTHER _____

SUBSEQUENT REPORT OF:
(Submit Original Form Only)

[ ] ABANDON*
[ ] NEW CONSTRUCTION
[ ] REPAIR CASING
[ ] PULL OR ALTER CASING
[ ] CHANGE OF PLANS
[ ] RECOMPLETE
[ ] CONVERT TO INJECTION
[ ] REPERFORATE
[ ] FRACTURE TREAT OR ACIDIZE
[ ] VENT OR FLARE
[X] OTHER **Step Rate Test**

DATE WORK COMPLETED _____
Report results of Multiple Completion and Recompletions to different reservoirs on WELL COMPLETION OR RECOMPLETION REPORT AND LOG form.
*Must be accompanies by a cement verification report.

12. DESCRIBE PROPOSED OR COMPLETED OPERATIONS. (Clearly state all pertinent details, and give pertinent dates. If well is directionally drilled, give subsurface locations and measured and true vertical depth for all markers and zones pertinent to this work.

A step rate test was conducted on the subject well on 5/8/01. Results indicate that the formation fracture gradient is .667 psi/ft. Therefore, Inland is requesting that the MAIP be changed to 1130 psi.

13.
NAME & SIGNATURE: Michael Guinn TITLE District Engineer DATE 5/14/01

(This space for State use only)

4/94

* See Instructions on Reverse Side

Approved by the
Utah Division of
Oil, Gas and Mining
Date: 05-29-01
By: [signature]

05/29/01
CHD

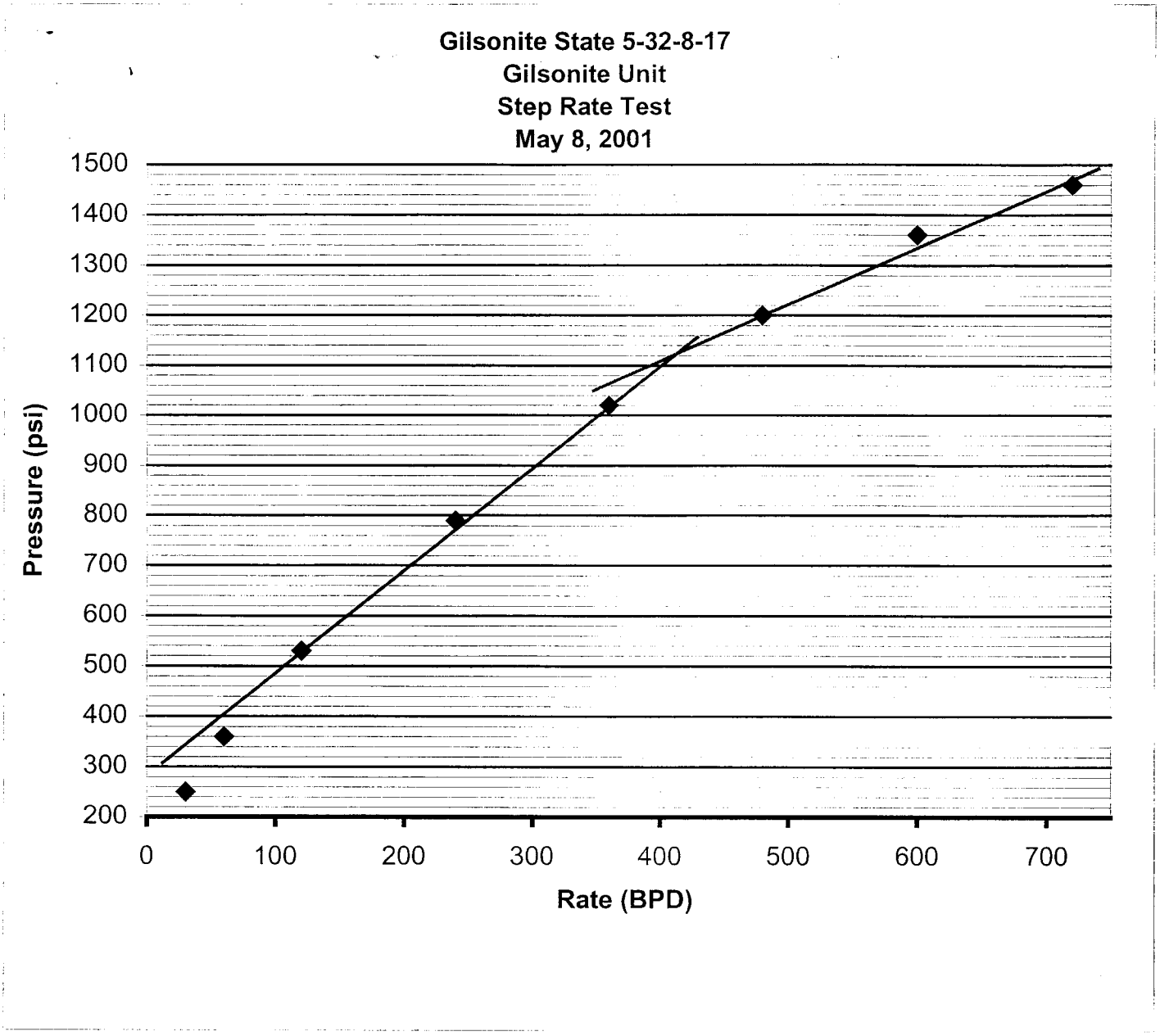

Start Pressure:	135	psi
Instantaneous Shut In Pressure (ISIP):	1425	psi
Top Perforation:	4866	feet
Fracture pressure (Pfp):	1130	psi
FG:	0.667	psi/ft

Step	Rate(bpd)	Pressure(psi)
1	30	250
2	60	360
3	120	530
4	240	790
5	360	1020
6	480	1200
7	600	1360
8	720	1460

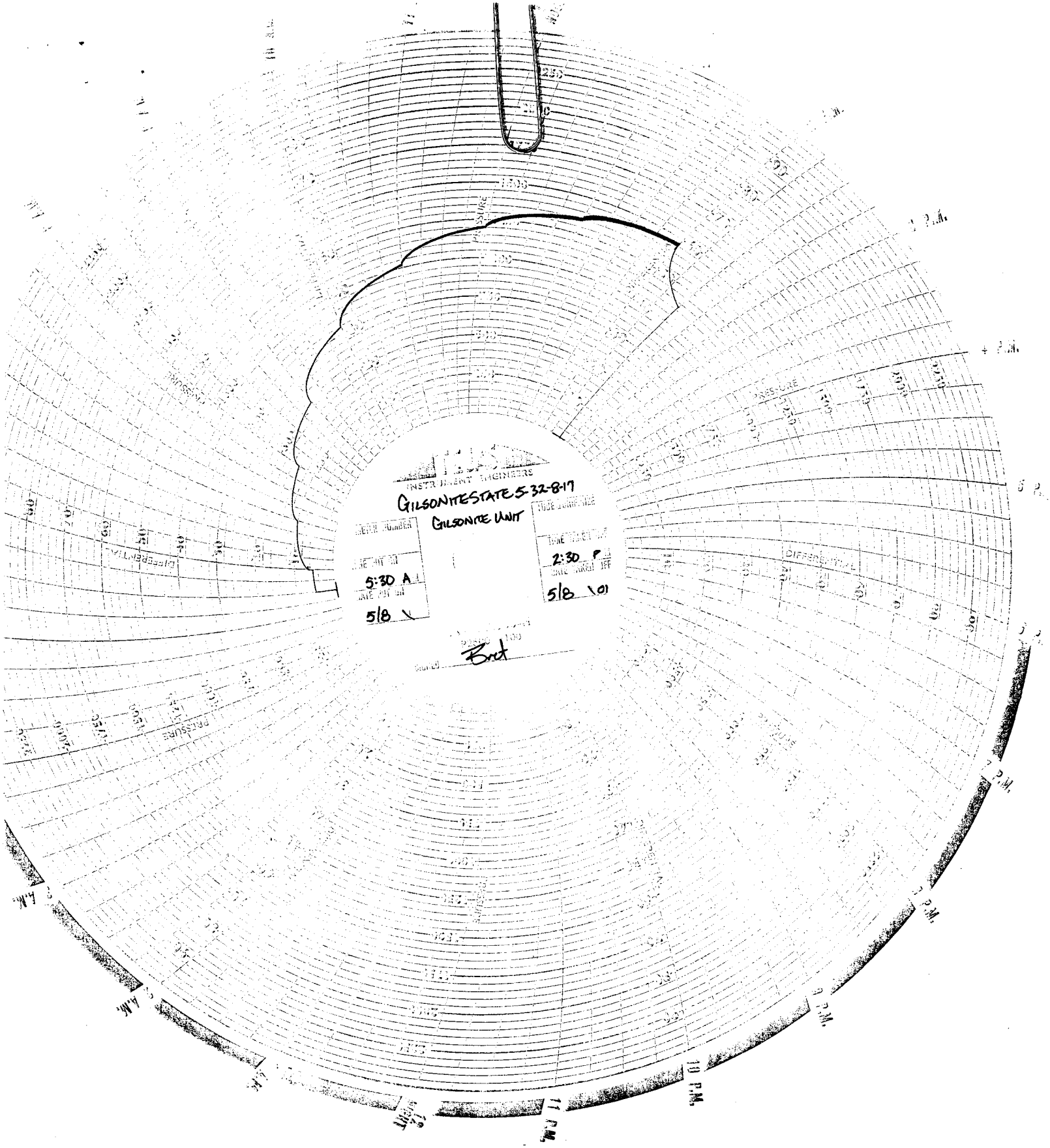
INSTRUMENT ENGINEERS
GILSONITE STATE 5-32-8-17
GILSONITE UNIT
5:30 A
5/8
2:30 P
5/8
Bret
PRESSURE
DIFFERENTIAL
10 P.M.
11 P.M.

STATE OF UTAH
DEPARTMENT OF NATURAL RESOURCES
DIVISION OF OIL, GAS AND MINING

FORM 9

SUNDRY NOTICES AND REPORTS ON WELLS

Do not use this form for proposals to drill new wells, significantly deepen existing wells below current bottom-hole depth, reenter plugged wells, or to drill horizontal laterals. Use APPLICATION FOR PERMIT TO DRILL form for such proposals.

5. LEASE DESIGNATION AND SERIAL NUMBER:

6. IF INDIAN, ALLOTTEE OR TRIBE NAME:

7. UNIT or CA AGREEMENT NAME: Gilsonite Unit

8. WELL NAME and NUMBER: State Wells in Unit

9. API NUMBER: 43-013-30814

10. FIELD AND POOL, OR WILDCAT:

1. TYPE OF WELL: OIL WELL ☐ GAS WELL ☐ OTHER Pipeline Work

2. NAME OF OPERATOR: Inland Production Company

3. ADDRESS OF OPERATOR: 1401 17th St #1000 CITY Denver STATE CO ZIP 80211 PHONE NUMBER: (303) 893-0102

4. LOCATION OF WELL

FOOTAGES AT SURFACE:

COUNTY: Duchesne

QTR/QTR, SECTION, TOWNSHIP, RANGE, MERIDIAN: NWSE T08S R17E S-32

STATE: UTAH

11. CHECK APPROPRIATE BOXES TO INDICATE NATURE OF NOTICE, REPORT, OR OTHER DATA

TYPE OF SUBMISSION	TYPE OF ACTION		
☑ NOTICE OF INTENT (Submit in Duplicate)	☐ ACIDIZE	☐ DEEPEN	☐ REPERFORATE CURRENT FORMATION
Approximate date work will start: 5/1/2004	☐ ALTER CASING	☐ FRACTURE TREAT	☐ SIDETRACK TO REPAIR WELL
	☐ CASING REPAIR	☑ NEW CONSTRUCTION	☐ TEMPORARILY ABANDON
	☑ CHANGE TO PREVIOUS PLANS	☐ OPERATOR CHANGE	☐ TUBING REPAIR
	☐ CHANGE TUBING	☐ PLUG AND ABANDON	☐ VENT OR FLARE
☐ SUBSEQUENT REPORT (Submit Original Form Only)	☐ CHANGE WELL NAME	☐ PLUG BACK	☐ WATER DISPOSAL
Date of work completion:	☐ CHANGE WELL STATUS	☐ PRODUCTION (START/RESUME)	☐ WATER SHUT-OFF
	☐ COMMINGLE PRODUCING FORMATIONS	☐ RECLAMATION OF WELL SITE	☐ OTHER: Comingle Production w common tank
	☐ CONVERT WELL TYPE	☐ RECOMPLETE - DIFFERENT FORMATION	

12. DESCRIBE PROPOSED OR COMPLETED OPERATIONS. Clearly show all pertinent details including dates, depths, volumes, etc.

Inland Production requests permission to add the following wells to a common tank battery system; Gilsonite St 2-32, State 4-32, State 6-32, State 7-32, Gilsonite St 8-32, Gilsonite St 10-32, Gilsonite St 12-32, Gilsonite St 14-32. Each well will have a pumping unit and line heater. The Common tank battery will consist of 2 400 Bbl oil tanks, 1 200 Bbl water tank, a heater treater and a line heater all located at the Gilsonite 7-32. There will be a test facility located at the Gilsonite 7-32 that will consist of a heater treater, 1 400 Bbl tank and 1 400 Bbl water tank. Each well will have a production test once every 2 months. The Gilsonite 7-32 location will be expanded by 75' to the south and 50' to the west to allow for transportation at the central gathering point. The flow bundles will consist of 4 2" flow lines that will be wrapped and insulated. 2 lines will have glycol for a trace system, 1 line will be the production line, and 1 line will be the well test line. There will be appoximately 2.4 miles of the production bundle installed.

COPY SENT TO OPERATOR
Date: 4-21-04
Initials: CHD

APPROVED BY THE STATE OF UTAH DIVISION OF OIL, GAS, AND MINING
DATE: 4/20/04
BY: [signature]
Production Allocation for each well should be based on actual days produced

NAME (PLEASE PRINT) David Gerbig TITLE Operations Engineer

SIGNATURE [signature] DATE 3/22/2004

RECEIVED
MAR 24 2004
DIV. OF OIL, GAS & MINING

(This space for State use only)

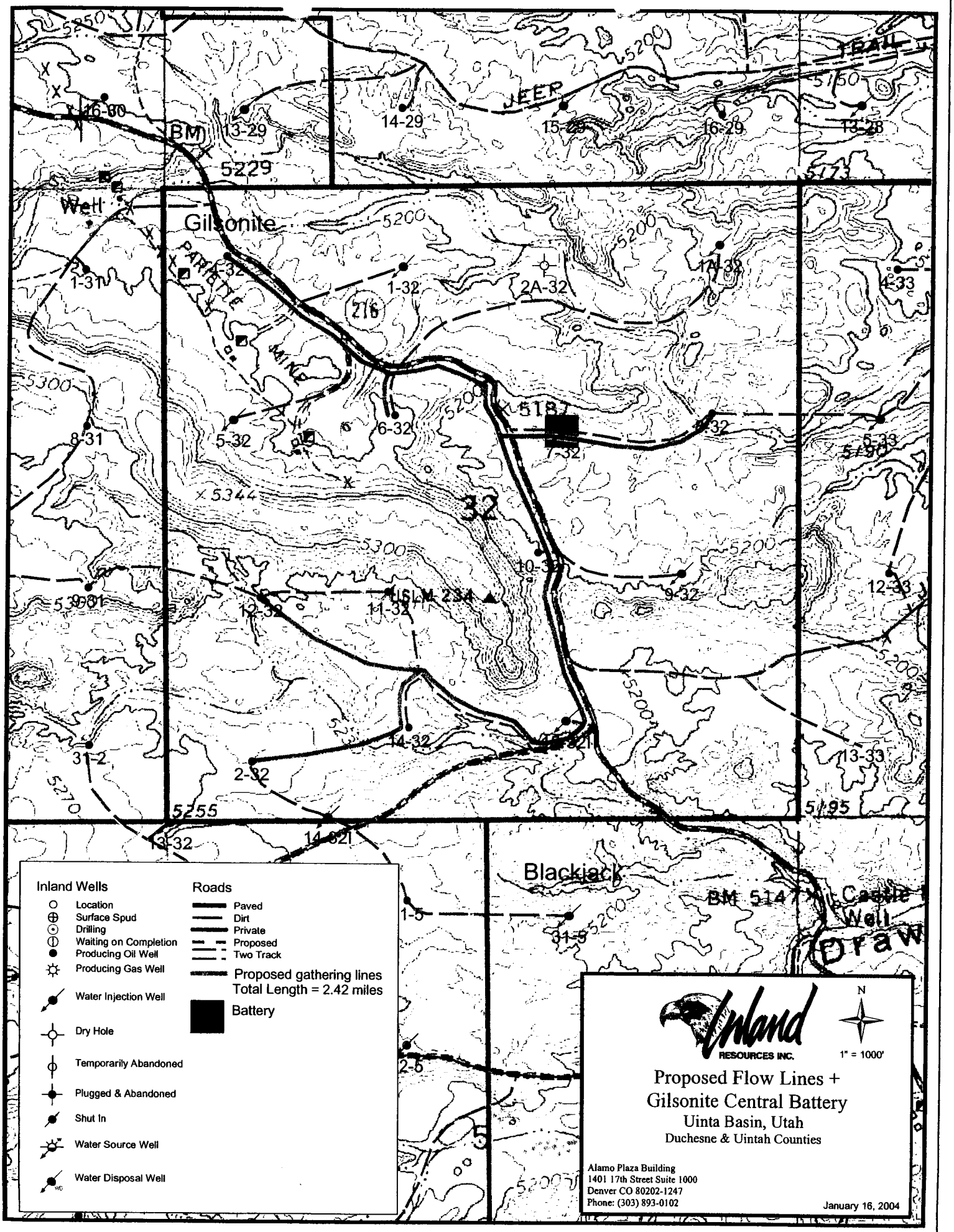
Gilsonite
Well
JEEP
TRAIL
BM 5229
13-29
14-29
15-29
16-29
13-28
16-30
1-31
1-32
2A-32
11-32
4-33
5-32
6-32
7-32
8-32
5-33
8-31
5-31
12-32
11-32
10-32
9-32
12-33
14-32
15-32
2-32
31-2
13-33
13-32
14-32
5187
5344
5255
5195
5270
5300
5200
5150
Blackjack
BM 514
Castle
Well
Draw
1-5
31-5
2-5
Inland Wells
Location
Surface Spud
Drilling
Waiting on Completion
Producing Oil Well
Producing Gas Well
Water Injection Well
Dry Hole
Temporarily Abandoned
Plugged & Abandoned
Shut In
Water Source Well
Water Disposal Well
Roads
Paved
Dirt
Private
Proposed
Two Track
Proposed gathering lines
Total Length = 2.42 miles
Battery
Inland
RESOURCES INC.
N
1" = 1000'
Proposed Flow Lines +
Gilsonite Central Battery
Uinta Basin, Utah
Duchesne & Uintah Counties
Alamo Plaza Building
1401 17th Street Suite 1000
Denver CO 80202-1247
Phone: (303) 893-0102
January 16, 2004

STATE OF UTAH
DEPARTMENT OF NATURAL RESOURCES
DIVISION OF OIL, GAS AND MINING

5. LEASE DESIGNATION AND SERIAL NUMBER: ML22060

SUNDRY NOTICES AND REPORTS ON WELLS

6. IF INDIAN, ALLOTTEE OR TRIBE NAME:

not use this form for proposals to drill new wells, significantly deepen existing wells below current bottom-hole depth, reenter plugged wells, c drill horizontal laterals. Use APPLICATION FOR PERMIT TO DRILL form for such proposals.

7. UNIT or CA AGREEMENT NAME: GILSONITE UNIT

1. TYPE OF WELL: OIL WELL ☐ GAS WELL ☐ OTHER Injection well

8. WELL NAME and NUMBER: STATE 5-32

2. NAME OF OPERATOR: Inland Production Company

9. API NUMBER: 4301330714

3. ADDRESS OF OPERATOR: Route 3 Box 3630 CITY Myton STATE UT ZIP 84052 PHONE NUMBER 435.646.3721

10. FIELD AND POOL, OR WILDCAT: Monument Butte

4. LOCATION OF WELL:
FOOTAGES AT SURFACE: 1937 FNL 0559 FWL COUNTY: Duchesne
QTR/QTR, SECTION, TOWNSHIP, RANGE, MERIDIAN: SW/NW, 32, T8S, R17E STATE: Utah

11. CHECK APPROPRIATE BOXES TO INDICATE NATURE OF NOTICE, REPORT, OR OTHER DATA

TYPE OF SUBMISSION	TYPE OF ACTION		
☐ NOTICE OF INTENT (Submit in Duplicate)	☐ ACIDIZE	☐ DEEPEN	☐ REPERFORATE CURRENT FORMATION
Approximate date work will	☐ ALTER CASING	☐ FRACTURE TREAT	☐ SIDETRACK TO REPAIR WELL
	☐ CASING REPAIR	☐ NEW CONSTRUCTION	☐ TEMPORARITLY ABANDON
	☐ CHANGE TO PREVIOUS PLANS	☐ OPERATOR CHANGE	☐ TUBING REPAIR
	☐ CHANGE TUBING	☐ PLUG AND ABANDON	☐ VENT OR FLAIR
☒ SUBSEQUENT REPORT (Submit Original Form Only)	☐ CHANGE WELL NAME	☐ PLUG BACK	☐ WATER DISPOSAL
Date of Work Completion:	☐ CHANGE WELL STATUS	☐ PRODUCTION (START/STOP)	☐ WATER SHUT-OFF
	☐ COMMINGLE PRODUCING FORMATIONS	☐ RECLAMATION OF WELL SITE	☒ OTHER: - Step Rate Test
07/30/2004	☐ CONVERT WELL TYPE	☐ RECOMPLETE - DIFFERENT FORMATION	

12. DESCRIBE PROPOSED OR COMPLETED OPERATIONS. Clearly show all pertinent details including dates, depths, volumes, etc.

A step rate test was conducted on the subject well on 7/30/04. Results from the test indicate that the fracture gradient is .735 psi/ft. Therefore, Inland is requesting that the maximum allowable injection pressure (MAIP) be changed to 1460 psi.

Accepted by the Utah Division of Oil, Gas and Mining
FOR RECORD ONLY

RECEIVED
AUG 19 2004
DIV. OF OIL, GAS & MINING

NAME (PLEASE Mike Guinn TITLE Engineer
SIGNATURE DATE August 18, 2004

(This space for State use only)

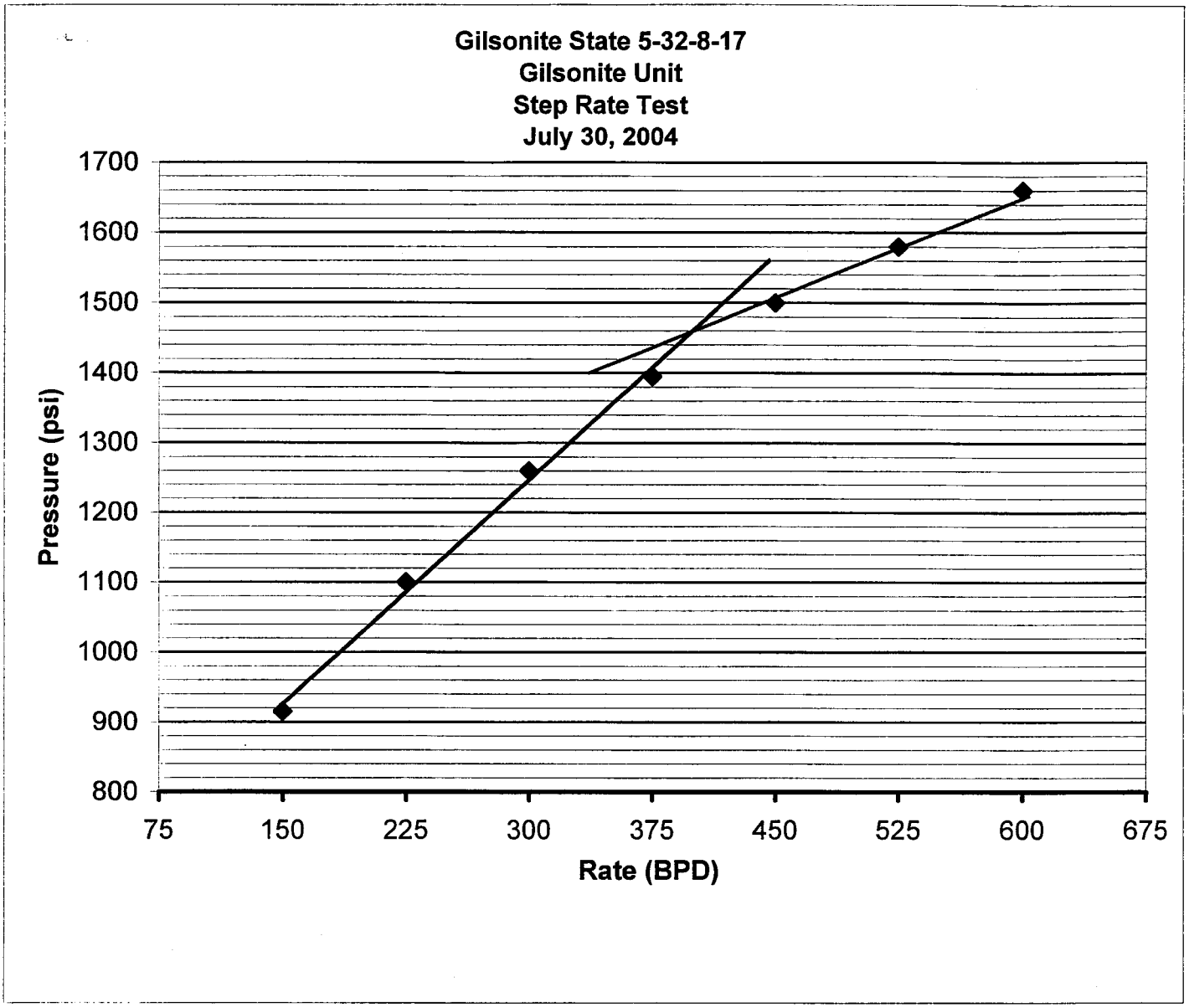

Start Pressure:	395	psi
Instantaneous Shut In Pressure (ISIP):	1620	psi
Top Perforation:	4866	feet
Fracture pressure (Pfp):	1460	psi
FG:	0.735	psi/ft

Step	Rate(bpd)	Pressure(psi)
1	75	695
2	150	915
3	225	1100
4	300	1260
5	375	1395
6	450	1500
7	525	1580
8	600	1660

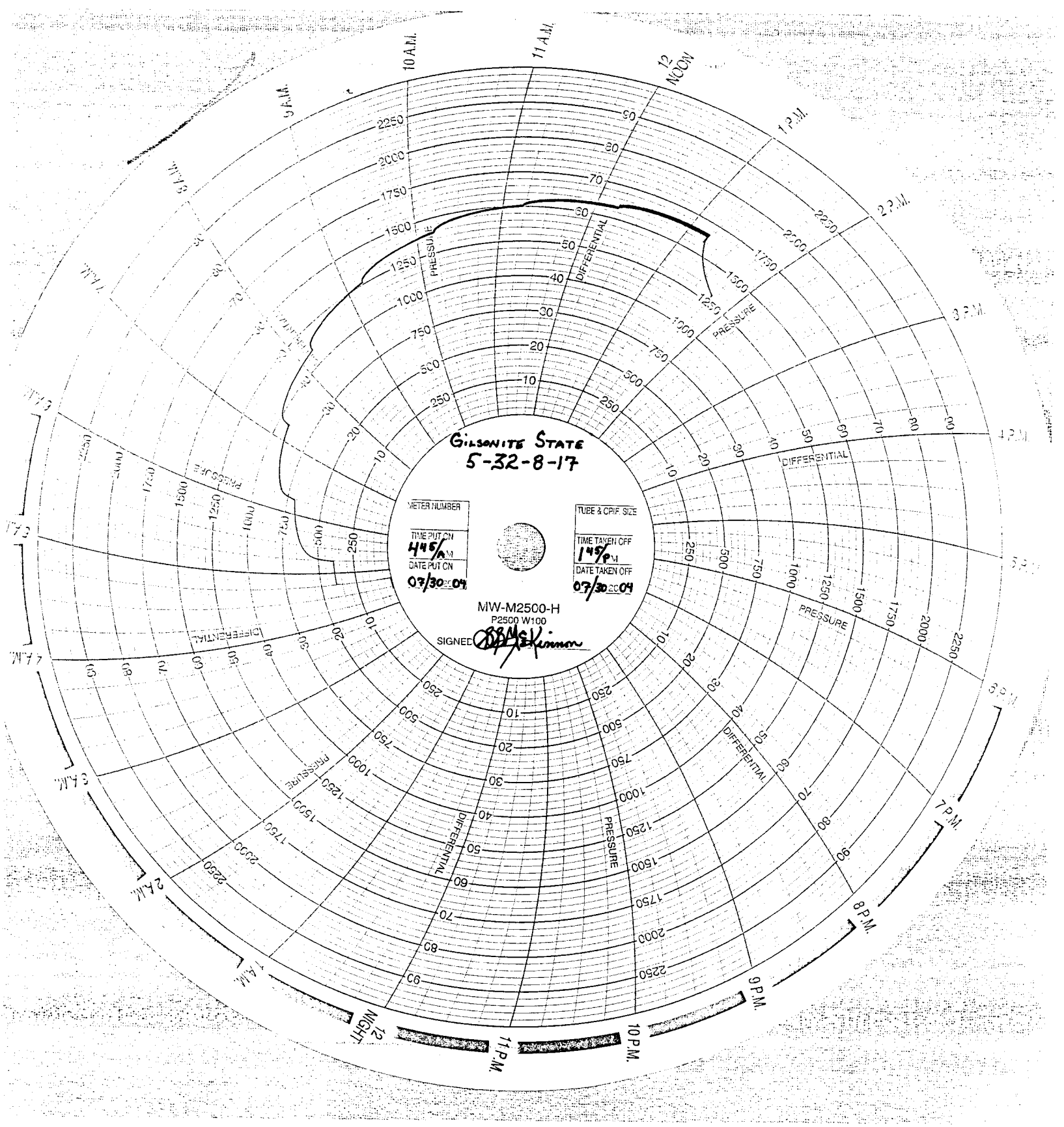
GILSONITE STATE
5-32-8-17
METER NUMBER
TIME PUT ON
445 AM
DATE PUT ON
07/30 2004
TUBE & ORIF. SIZE
TIME TAKEN OFF
145 PM
DATE TAKEN OFF
07/30 2004
MW-M2500-H
P2500 W100
SIGNED
PRESSURE
DIFFERENTIAL
12 NOON
1 P.M.
2 P.M.
3 P.M.
4 P.M.
5 P.M.
6 P.M.
7 P.M.
8 P.M.
9 P.M.
10 P.M.
11 P.M.
12 MIDNIGHT
1 A.M.
2 A.M.
3 A.M.
4 A.M.
5 A.M.
6 A.M.
7 A.M.
8 A.M.
9 A.M.
10 A.M.
11 A.M.

STATE OF UTAH
DEPARTMENT OF NATURAL RESOURCES
DIVISION OF OIL, GAS AND MINING

UIC FORM 5

TRANSFER OF AUTHORITY TO INJECT

Well Name and Number: See Attached List	API Number:
Location of Well: Footage: County:	Field or Unit Name: See Attached List
QQ, Section, Township, Range: State: UTAH	Lease Designation and Number:

EFFECTIVE DATE OF TRANSFER: 9/1/2004

CURRENT OPERATOR

Company: Inland Production Company
Address: 1401 17th Street Suite 1000
city Denver state Co zip 80202
Phone: (303) 893-0102
Comments:

Name: Brian Harris
Signature: Brian Harris
Title: Engineering Tech.
Date: 9/15/2004

NEW OPERATOR

Company: Newfield Production Company
Address: 1401 17th Street Suite 1000
city Denver state Co zip 80202
Phone:
Comments:

Name: Brian Harris
Signature: Brian Harris
Title: Engineering Tech.
Date: 9/15/2004

(This space for State use only)

Transfer approved by: D. Hunt
Title: Tech. Services Manager

Approval Date: 9-20-04

Comments: Note: Indian Country wells will require EPA approval.

(5/2000)

RECEIVED
SEP 20 2004
DIV. OF OIL, GAS & MINING

Corporations Section
P.O.Box 13697
Austin, Texas 78711-3697

Geoffrey S. Connor
Secretary of State

Office of the Secretary of State

The undersigned, as Secretary of State of Texas, does hereby certify that the attached is a true and correct copy of each document on file in this office as described below:

Newfield Production Company
Filing Number: 41530400

Articles of Amendment September 02, 2004

In testimony whereof, I have hereunto signed my name officially and caused to be impressed hereon the Seal of State at my office in Austin, Texas on September 10, 2004.

Secretary of State

ARTICLES OF AMENDMENT
TO THE
ARTICLES OF INCORPORATION
OF
INLAND PRODUCTION COMPANY

FILED
In the Office of the
Secretary of State of Texas

SEP 02 2004

Corporations Section

Pursuant to the provisions of Article 4.04 of the Texas Business Corporation Act (the "TBCA"), the undersigned corporation adopts the following articles of amendment to the articles of incorporation:

ARTICLE 1 – Name

The name of the corporation is Inland Production Company.

ARTICLE 2 – Amended Name

The following amendment to the Articles of Incorporation was approved by the Board of Directors and adopted by the shareholders of the corporation on August 27, 2004.

The amendment alters or changes Article One of the Articles of Incorporation to change the name of the corporation so that, as amended, Article One shall read in its entirety as follows:

"ARTICLE ONE – The name of the corporation is Newfield Production Company."

ARTICLE 3 – Effective Date of Filing

This document will become effective upon filing.

The holder of all of the shares outstanding and entitled to vote on said amendment has signed a consent in writing pursuant to Article 9.10 of the TBCA, adopting said amendment, and any written notice required has been given.

IN WITNESS WHEREOF, the undersigned corporation has executed these Articles of Amendment as of the 1st day of September, 2004.

INLAND RESOURCES INC.

By: Susan G. Riggs
Susan G. Riggs, Treasurer

Division of Oil, Gas and Mining

OPERATOR CHANGE WORKSHEET

ROUTING
1. GLH
2. CDW
3. FILE

Change of Operator (Well Sold) — Designation of Agent/Operator

X Operator Name Change — **Merger**

The operator of the well(s) listed below has changed, effective: **9/1/2004**

FROM: (Old Operator):	**TO:** (New Operator):
N5160-Inland Production Company	N2695-Newfield Production Company
Route 3 Box 3630	Route 3 Box 3630
Myton, UT 84052	Myton, UT 84052
Phone: 1-(435) 646-3721	Phone: 1-(435) 646-3721

CA No. **Unit:** GILSONITE

WELL(S)

NAME	SEC	TWN	RNG	API NO	ENTITY NO	LEASE TYPE	WELL TYPE	WELL STATUS
STATE 1-32	32	080S	170E	4301330599	11486	State	WI	A
GILSONITE ST 2-32	32	080S	170E	4301330604	11486	State	OW	P
STATE 7-32	32	080S	170E	4301330658	11486	State	WI	A
STATE 11-32	32	080S	170E	4301330685	11486	State	WI	A
STATE 1A-32	32	080S	170E	4301330691	11486	State	WI	A
STATE 9-32	32	080S	170E	4301330713	11486	State	WI	A
STATE 5-32	32	080S	170E	4301330714	11486	State	WI	A
STATE 6-32	32	080S	170E	4301330748	11486	State	OW	P
GILSONITE ST 12-32	32	080S	170E	4301330787	11486	State	OW	P
STATE 4-32	32	080S	170E	4301330800	11486	State	OW	P
GILSONITE 13-32	32	080S	170E	4301331403	11486	State	WI	A
GILSONITE STATE 14-32	32	080S	170E	4301331480	11486	State	OW	P
GILSONITE STATE 10-32	32	080S	170E	4301331485	11486	State	OW	P
GILSONITE STATE 8-32	32	080S	170E	4301331498	11486	State	OW	P
GILSONITE ST 14I-32	32	080S	170E	4301331523	11486	State	WI	A
GILSONITE ST 15-32I	32	080S	170E	4301331584	11486	State	WI	A

OPERATOR CHANGES DOCUMENTATION

Enter date after each listed item is completed

1. (R649-8-10) Sundry or legal documentation was received from the **FORMER** operator on: 9/15/2004
2. (R649-8-10) Sundry or legal documentation was received from the **NEW** operator on: 9/15/2004
3. The new company was checked on the **Department of Commerce, Division of Corporations Database on:** 2/23/2005
4. Is the new operator registered in the State of Utah: YES Business Number: 755627-0143
5. If **NO**, the operator was contacted contacted on:

6a. (R649-9-2)Waste Management Plan has been received on: IN PLACE

6b. Inspections of LA PA state/fee well sites complete on: waived

7. **Federal and Indian Lease Wells:** The BLM and or the BIA has approved the merger, name change, or operator change for all wells listed on Federal or Indian leases on: BLM BIA

8. **Federal and Indian Units:**
The BLM or BIA has approved the successor of unit operator for wells listed on: n/a

9. **Federal and Indian Communization Agreements ("CA"):**
The BLM or BIA has approved the operator for all wells listed within a CA on: na/

10. **Underground Injection Control ("UIC")** The Division has approved UIC Form 5, **Transfer of Authority to Inject,** for the enhanced/secondary recovery unit/project for the water disposal well(s) listed on: 2/23/2005

DATA ENTRY:

1. Changes entered in the **Oil and Gas Database on:** 2/28/2005
2. Changes have been entered on the **Monthly Operator Change Spread Sheet on:** 2/28/2005
3. Bond information entered in RBDMS on: 2/28/2005
4. Fee/State wells attached to bond in RBDMS on: 2/28/2005
5. Injection Projects to new operator in RBDMS on: 2/28/2005
6. Receipt of Acceptance of Drilling Procedures for APD/New on: waived

FEDERAL WELL(S) BOND VERIFICATION:

1. Federal well(s) covered by Bond Number: UT 0056

INDIAN WELL(S) BOND VERIFICATION:

1. Indian well(s) covered by Bond Number: 61BSBDH2912

FEE & STATE WELL(S) BOND VERIFICATION:

1. (R649-3-1) The **NEW** operator of any fee well(s) listed covered by Bond Number 61BSBDH2919

2. The **FORMER** operator has requested a release of liability from their bond on: n/a*
The Division sent response by letter on: n/a

LEASE INTEREST OWNER NOTIFICATION:

3. (R649-2-10) The **FORMER** operator of the fee wells has been contacted and informed by a letter from the Division of their responsibility to notify all interest owners of this change on: n/a

COMMENTS:

*Bond rider changed operator name from Inland Production Company to Newfield Production Company - **received 2/23/05**

STATE OF UTAH
DEPARTMENT OF NATURAL RESOURCES
DIVISION OF OIL, GAS AND MINING

5. LEASE DESIGNATION AND SERIAL NUMBER: ML22060

SUNDRY NOTICES AND REPORTS ON WELLS

6. IF INDIAN, ALLOTTEE OR TRIBE NAME:

> not use this form for proposals to drill new wells, significantly deepen existing wells below current bottom-hole depth, reenter plugged wells, to drill horizontal laterals. Use APPLICATION FOR PERMIT TO DRILL form for such proposals.

7. UNIT or CA AGREEMENT NAME: GILSONITE UNIT

1. TYPE OF WELL: OIL WELL ☐ GAS WELL ☐ OTHER Injection well

8. WELL NAME and NUMBER: STATE 5-32

2. NAME OF OPERATOR: Newfield Production Company

9. API NUMBER: 4301330714

3. ADDRESS OF OPERATOR: Route 3 Box 3630 CITY Myton STATE UT ZIP 84052 PHONE NUMBER 435.646.3721

10. FIELD AND POOL, OR WILDCAT: Monument Butte

4. LOCATION OF WELL:

FOOTAGES AT SURFACE: 1937 FNL 0559 FWL COUNTY: Duchesne

QTR/QTR, SECTION, TOWNSHIP, RANGE, MERIDIAN: SW/NW, 32, T8S, R17E STATE: Utah

11. CHECK APPROPRIATE BOXES TO INDICATE NATURE OF NOTICE, REPORT, OR OTHER DATA

TYPE OF ACTION SubDate

TYPE OF SUBMISSION	TYPE OF ACTION		
☐ NOTICE OF INTENT (Submit in Duplicate)	☐ ACIDIZE	☐ DEEPEN	☐ REPERFORATE CURRENT FORMATION
Approximate date work will	☐ ALTER CASING	☐ FRACTURE TREAT	☐ SIDETRACK TO REPAIR WELL
	☐ CASING REPAIR	☐ NEW CONSTRUCTION	☐ TEMPORARITLY ABANDON
	☐ CHANGE TO PREVIOUS PLANS	☐ OPERATOR CHANGE	☐ TUBING REPAIR
	☐ CHANGE TUBING	☐ PLUG AND ABANDON	☐ VENT OR FLAIR
☒ SUBSEQUENT REPORT (Submit Original Form Only)	☐ CHANGE WELL NAME	☐ PLUG BACK	☐ WATER DISPOSAL
	☐ CHANGE WELL STATUS	☐ PRODUCTION (START/STOP)	☐ WATER SHUT-OFF
Date of Work Completion: 09/13/2005	☐ COMMINGLE PRODUCING FORMATIONS	☐ RECLAMATION OF WELL SITE	☒ OTHER: - 5 Year MIT
	☐ CONVERT WELL TYPE	☐ RECOMPLETE - DIFFERENT FORMATION	

12. DESCRIBE PROPOSED OR COMPLETED OPERATIONS. Clearly show all pertinent details including dates, depths, volumes, etc.

On 9/13/05 Nathan Wiser with the EPA was contacted concerning the 5-year MIT on the above listed well. Permission was given at that time to perform the test on 9/29/05. On 9/29/05 the csg was pressured up to 1100 psig and charted for 30 minutes with 0 psi pressure loss. The well was injecting during the test. The tbg pressure was 1440 psig during the test. There was not an EPA representative available to witness the test. API# 43-013-30714.

Accepted by the Utah Division of Oil, Gas and Mining
FOR RECORD ONLY

NAME (PLEASE PRINT) Kathy Chapman TITLE Office Manager

SIGNATURE Kathy Chapman DATE 10/03/2005

(This space for State use only)

RECEIVED
OCT 0 / 2005
DIV. OF OIL, GAS & MINING

FORM 3160-5
(September 2001)

UNITED STATES
DEPARTMENT OF THE INTERIOR
BUREAU OF LAND MANAGEMENT

FORM APPROVED
OMB No. 1004-0135
Expires January 31,2004

SUNDRY NOTICES AND REPORTS ON WELLS

Do not use this form for proposals to drill or to re-enter an abandoned well. Use Form 3160-3 (APD) for such proposals.

5. Lease Serial No.
ML22060

6. If Indian, Allottee or Tribe Name.

7. If Unit or CA/Agreement, Name and/or No.
GILSONITE UNIT

1. Type of Well
☐ Oil Well ☐ Gas Well ☒ Other Injection well

8. Well Name and No.
STATE 5-32

2. Name of Operator
Newfield Production Company

9. API Well No.
4301330714

3a. Address Route 3 Box 3630
Myton, UT 84052

3b. Phone No. *(include are code)*
435.646.3721

10. Field and Pool, or Exploratory Area
Monument Butte

4. Location of Well *(Footage, Sec., T., R., M., or Survey Description)*
1937 FNL 0559 FWL
SW/NW Section 32 T8S R17E

11. County or Parish, State
Duchesne,UT

12. CHECK APPROPRIATE BOX(ES) TO INIDICATE NATURE OF NOTICE, OR OTHER DATA

TYPE OF SUBMISSION	TYPE OF ACTION			
☐ Notice of Intent	☐ Acidize	☐ Deepen	☐ Production(Start/Resume)	☐ Water Shut-Off
☒ Subsequent Report	☐ Alter Casing	☐ Fracture Treat	☐ Reclamation	☐ Well Integrity
☐ Final Abandonment Notice	☐ Casing Repair	☐ New Construction	☐ Recomplete	☒ Other 5 Year MIT
	☐ Change Plans	☐ Plug & Abandon	☐ Temporarily Abandon	
	☐ Convert to Injector	☐ Plug Back	☐ Water Disposal	

13. Describe Proposed or Completed Operation (clearly state all pertinent details, including estimated starting date of any proposed work and approximate duration thereof. If the proposal is to deepen directionally or recomplete horizontally, give subsurface locations and measured and true vertical depths of all pertinent markers and zones. Attach the Bond under which the work will be performed or provide the Bond No. on file with BLM/BIA. Required subsequent reports shall be filed within 30 days following completion of the involved operations. If the operation results in a multiple completion or recompletion in a new interval, a Form 3160-4 shall be filed once testing has been completed. Final Abandonment Notices shall be filed only after all requirements, including reclamation, have been completed, and the operator has determined that the site is ready for final inspection.)

On 9/13/05 Nathan Wiser with the EPA was contacted concerning the 5-year MIT on the above listed well. Permission was given at that time to perform the test on 9/29/05. On 9/29/05 the csg was pressured up to 1100 psig and charted for 30 minutes with 0 psi pressure loss. The well was injecting during the test. The tbg pressure was 1440 psig during the test. There was not an EPA representative available to witness the test. API# 43-013-30714.

I hereby certify that the foregoing is true and correct
Name *(Printed/ Typed)*
Kathy Chapman

Title
Office Manager

Signature Kathy Chapman

Date
10/03/2005

Approved by

Title

Date

Conditions of approval, if any, are attached. Approval of this notice does not warrant or certify that the applicant holds legal or equitable title to those rights in the subject lease which would entitle the applicant to conduct operations thereon.

Office

Title 18 U.S.C. Section 1001 and Title 43 U.S.C. Section 1212, make it a crime for any person knowingly and willfully to make to any department or agency of the United States any false, fictitious and fraudulent statements or representations as to any matter within its jurisdiction

(Instructions on reverse)

RECEIVED
OCT 0 / 2005
DIV. OF OIL, GAS & MINING

Mechanical Integrity Test
Casing or Annulus Pressure Mechanical Integrity Test

U.S. Environmental Protection Agency
Underground Injection Control Program
999 18th Street, Suite 500 Denver, CO 80202-2466

EPA Witness: _____ Date: 09/29/05
Test conducted by: Dale Giles
Others present: _____

Well Name: Gilsonite State 5-32-8-17 Type: ER SWD Status: AC TA UC
Field: Gilsonite Unit
Location: _____ Sec: 32 T 8 N (S) R 17 (E) W County: Duchesne State: UT
Operator: Newfield Production Co.
Last MIT: ___/___/___ Maximum Allowable Pressure: 1460 PSIG

Is this a regularly scheduled test? [X] Yes [ ] No
Initial test for permit? [ ] Yes [ ] No
Test after well rework? [ ] Yes [ ] No
Well injecting during test? [X] Yes [ ] No If Yes, rate: 46 bpd

Pre-test casing/tubing annulus pressure: 0 psig

MIT DATA TABLE	Test #1	Test #2	Test #3
TUBING	*PRESSURE*		
Initial Pressure	1440 psig	psig	psig
End of test pressure	1440 psig	psig	psig
CASING / TUBING	*ANNULUS*	*PRESSURE*	
0 minutes	1100 psig	psig	psig
5 minutes	1100 psig	psig	psig
10 minutes	1100 psig	psig	psig
15 minutes	1100 psig	psig	psig
20 minutes	1100 psig	psig	psig
25 minutes	1100 psig	psig	psig
30 minutes	1100 psig	psig	psig
_____ minutes	psig	psig	psig
_____ minutes	psig	psig	psig
RESULT	[ ] Pass [ ] Fail	[ ] Pass [ ] Fail	[ ] Pass [ ] Fail

Does the annulus pressure build back up after the test ? [ ] Yes [X] No

MECHANICAL INTEGRITY PRESSURE TEST

Additional comments for mechanical integrity pressure test, such as volume of fluid added to annulus and bled back at end of test, reason for failing test (casing head leak, tubing leak, other), etc.:

_____

Signature of Witness: _____

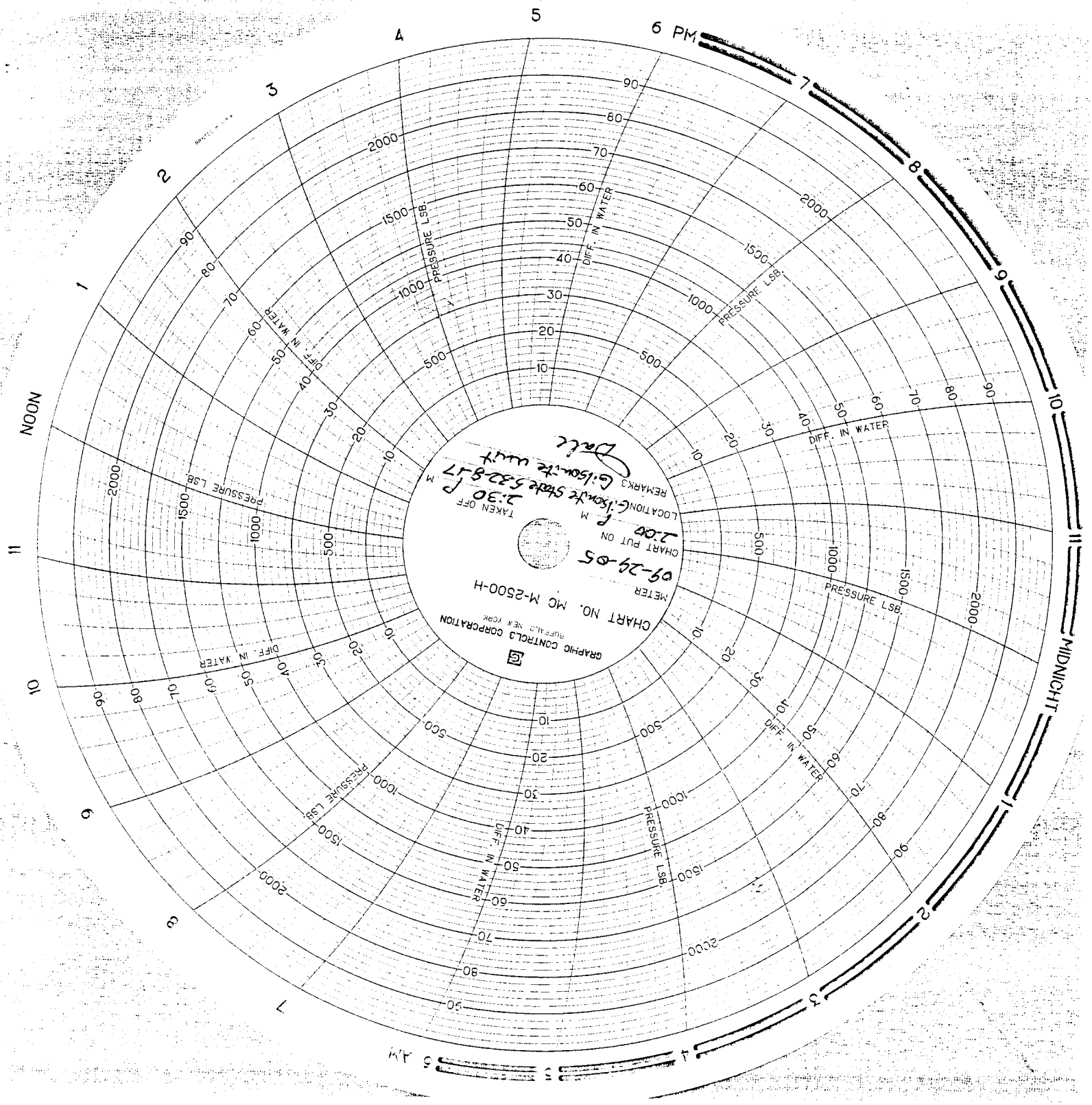
GRAPHIC CONTROLS CORPORATION
BUFFALO, NEW YORK
CHART NO. MC M-2500-H
METER
CHART PUT ON
09-29-85
2:00 P M
TAKEN OFF
2:30 P M
LOCATION
REMARKS
PRESSURE LSB.
DIFF. IN WATER
MIDNIGHT
NOON
PM
AM

STATE OF UTAH
DEPARTMENT OF NATURAL RESOURCES
DIVISION OF OIL, GAS AND MINING

SUNDRY NOTICES AND REPORTS ON WELLS

Do not use this form for proposals to drill new wells, significantly deepen existing wells below current bottom-hole depth, reenter plugged wells, or to drill horizontal laterals. Use APPLICATION FOR PERMIT TO DRILL form for such proposals.

5. LEASE DESIGNATION AND SERIAL NUMBER: UTAH STATE ML-22060
6. IF INDIAN, ALLOTTEE OR TRIBE NAME:
7. UNIT or CA AGREEMENT NAME: GILSONITE UNIT
8. WELL NAME and NUMBER: STATE 5-32
9. API NUMBER: 4301330714
10. FIELD AND POOL, OR WILDCAT: MONUMENT BUTTE

1. TYPE OF WELL: OIL WELL [X] GAS WELL [ ] OTHER
2. NAME OF OPERATOR: NEWFIELD PRODUCTION COMPANY
3. ADDRESS OF OPERATOR: Route 3 Box 3630 CITY Myton STATE UT ZIP 84052 PHONE NUMBER 435.646.3721
4. LOCATION OF WELL:
FOOTAGES AT SURFACE: 1937 FNL 559 FWL COUNTY: DUCHESNE
OTR/OTR. SECTION. TOWNSHIP. RANGE. MERIDIAN: SWNW, 32, T8S, R17E STATE: UT

11. CHECK APPROPRIATE BOXES TO INDICATE NATURE OF NOTICE, REPORT, OR OTHER DATA

TYPE OF SUBMISSION	TYPE OF ACTION		
[ ] NOTICE OF INTENT (Submit in Duplicate)	[ ] ACIDIZE	[ ] DEEPEN	[ ] REPERFORATE CURRENT FORMATION
Approximate date work will	[ ] ALTER CASING	[ ] FRACTURE TREAT	[ ] SIDETRACK TO REPAIR WELL
	[ ] CASING REPAIR	[ ] NEW CONSTRUCTION	[ ] TEMPORARITLY ABANDON
	[ ] CHANGE TO PREVIOUS PLANS	[ ] OPERATOR CHANGE	[ ] TUBING REPAIR
	[ ] CHANGE TUBING	[ ] PLUG AND ABANDON	[ ] VENT OR FLAIR
[X] SUBSEQUENT REPORT (Submit Original Form Only)	[ ] CHANGE WELL NAME	[ ] PLUG BACK	[ ] WATER DISPOSAL
Date of Work Completion:	[ ] CHANGE WELL STATUS	[ ] PRODUCTION (START/STOP)	[ ] WATER SHUT-OFF
	[ ] COMMINGLE PRODUCING FORMATIONS	[ ] RECLAMATION OF WELL SITE	[X] OTHER: - Recompletion/MIT
12/12/2006	[ ] CONVERT WELL TYPE	[X] RECOMPLETE - DIFFERENT FORMATION	

12. DESCRIBE PROPOSED OR COMPLETED OPERATIONS. Clearly show all pertinent details including dates, depths, volumes, etc.

The subject well was re-completed in the Green River Formation. Six new intervals were perforated, the LODC sds @ 5496'-5510' & B2 sds @ 5196'-5202', & D2 sds 4943'-4946', & GB6 sds @ 4412'-4420', & GB4 sds 4361'-4366', 4372'-4378' all w/4 JSPF for a total of 194 shots. Zones 4420'-4361 were acidized, and zones 5414'-5420', 5196'-5202',4943'-4946' were fraced. Packer was set at 4790' On 11-6-06 Nathan Wiser with the EPA was contacted concerning the MIT on the above list well. Permission was given at that time to perform the test on 11-28-06. On 11-28-06 the csg was pressured up to 1100 psig and charted for 30 minutes with no pressure loss. The well was not injecting during the test. The tbg pressure was 250 psig during the test. There was not a EPA representative available to witness the test. We are currently waiting on permission to commence injecting.

Accepted by the Utah Division of Oil, Gas and Mining
FOR RECORD ONLY

NAME (PLEASE PRINT) Jentri Park TITLE Production Clerk
SIGNATURE DATE 12/12/2006

(This space for State use only)

RECEIVED
DEC 15 2006
DIV. OF OIL, GAS & MINING

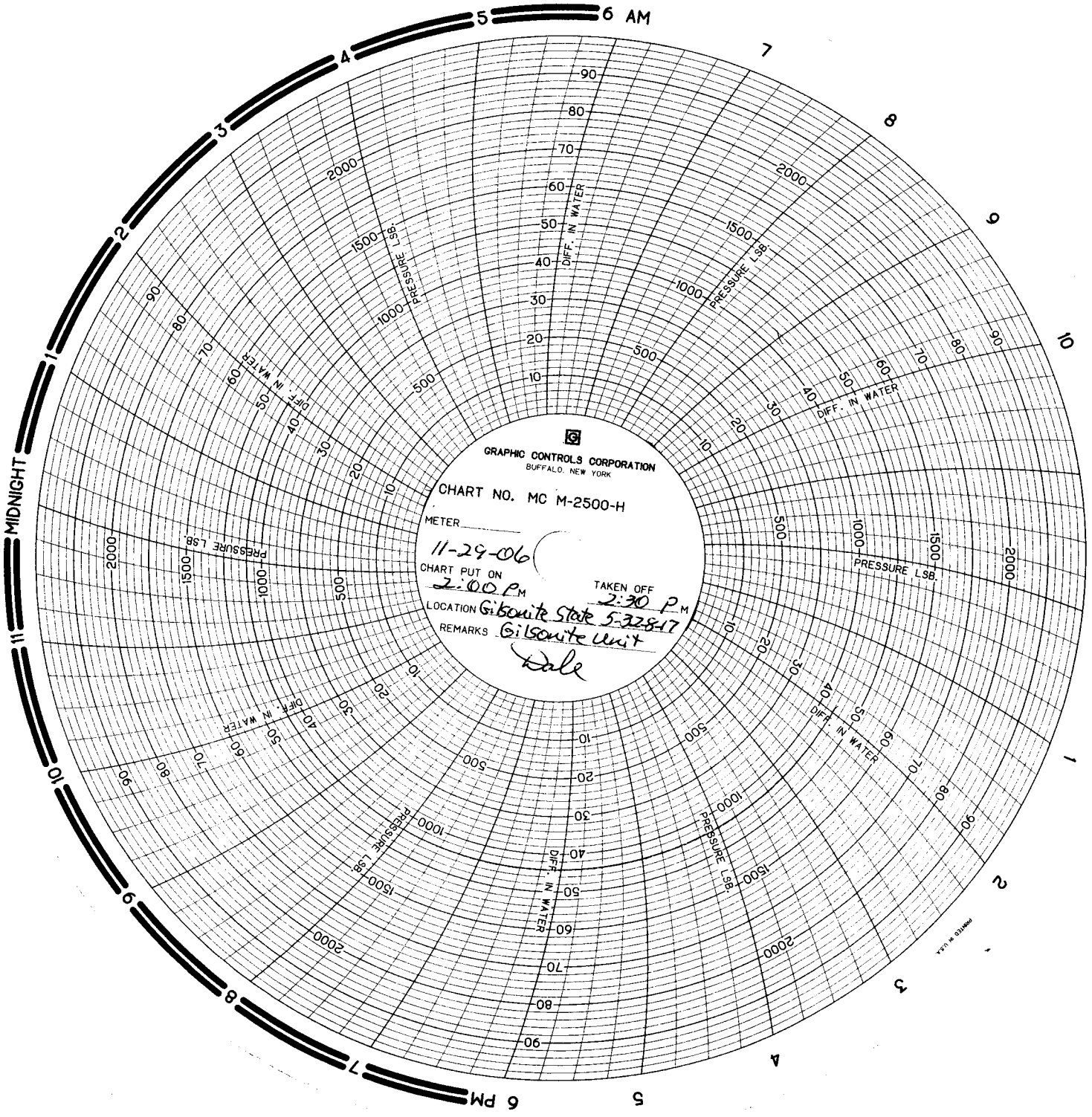
GRAPHIC CONTROLS CORPORATION
BUFFALO, NEW YORK
CHART NO. MC M-2500-H
METER
11-29-06
CHART PUT ON 2:00 PM
TAKEN OFF 2:30 PM
LOCATION Gibsonite State 5-32-8-17
REMARKS Gibsonite Unit
Dale
MIDNIGHT
6 AM
NOON
6 PM
PRESSURE LSB.
DIFF. IN WATER

Mechanical Integrity Test
Casing or Annulus Pressure Mechanical Integrity Test

U.S. Environmental Protection Agency
Underground Injection Control Program
999 18th Street, Suite 500 Denver, CO 80202-2466

EPA Witness: _____ Date: 11/29/06
Test conducted by: Dale Giles
Others present: _____

Well Name: Gilsonite State 5-32-8-17 Type: ER SWD Status: AC TA UC
Field: Gilsonite Unit
Location: _____ Sec: 32 T 8 N (S) R 17 (E) W County: Duchesne State: Ut.
Operator: Newfield Production Co.
Last MIT: / / Maximum Allowable Pressure: 1460 PSIG

Is this a regularly scheduled test? [ ] Yes [ ] No
Initial test for permit? [ ] Yes [ ] No
Test after well rework? [X] Yes [ ] No
Well injecting during test? [ ] Yes [X] No If Yes, rate: _____ bpd

Pre-test casing/tubing annulus pressure: 0 psig

MIT DATA TABLE	Test #1	Test #2	Test #3
TUBING	*PRESSURE*		
Initial Pressure	250 psig	psig	psig
End of test pressure	250 psig	psig	psig
CASING / TUBING	*ANNULUS*	*PRESSURE*	
0 minutes	1100 psig	psig	psig
5 minutes	1100 psig	psig	psig
10 minutes	1100 psig	psig	psig
15 minutes	1100 psig	psig	psig
20 minutes	1100 psig	psig	psig
25 minutes	1100 psig	psig	psig
30 minutes	1100 psig	psig	psig
_____ minutes	psig	psig	psig
_____ minutes	psig	psig	psig
RESULT	[ ] Pass [ ] Fail	[ ] Pass [ ] Fail	[ ] Pass [ ] Fail

Does the annulus pressure build back up after the test ? [ ] Yes [X] No

MECHANICAL INTEGRITY PRESSURE TEST

Additional comments for mechanical integrity pressure test, such as volume of fluid added to annulus and bled back at end of test, reason for failing test (casing head leak, tubing leak, other), etc.:

NEWFIELD

December 13, 2006

Mr. Brad Hill
State of Utah, DOGM
1594 West North Temple-Suite 1310
P.O. Box 145801
Salt Lake City, Utah 84114-5801

RE: Re-Completion, MIT
Gilsonite State 9-32-8-17
Sec.32, T8S, R17E
API #43-013-30713

Mr. Brad Hill:

An MIT was conducted on the above listed well. Please find enclosed the sundry, tabular sheet, and a copy of the chart. If you have any questions please call me at 435-646-4843.

Sincerely,

Jentri Park
Production Clerk

RECEIVED
DEC 1 5 2006
DIV. OF OIL, GAS & MINING

STATE OF UTAH
DEPARTMENT OF NATURAL RESOURCES
DIVISION OF OIL, GAS, AND MINING

FORM 9

5.LEASE DESIGNATION AND SERIAL NUMBER: ML-22060

SUNDRY NOTICES AND REPORTS ON WELLS

Do not use this form for proposals to drill new wells, significantly deepen existing wells below current bottom-hole depth, reenter plugged wells, or to drill horizontal laterals. Use APPLICATION FOR PERMIT TO DRILL form for such proposals.

6. IF INDIAN, ALLOTTEE OR TRIBE NAME:

7.UNIT or CA AGREEMENT NAME: GMBU (GRRV)

1. TYPE OF WELL Water Injection Well

8. WELL NAME and NUMBER: STATE 5-32

2. NAME OF OPERATOR: NEWFIELD PRODUCTION COMPANY

9. API NUMBER: 43013307140000

3. ADDRESS OF OPERATOR: Rt 3 Box 3630 , Myton, UT, 84052

PHONE NUMBER: 435 646-4825 Ext

9. FIELD and POOL or WILDCAT: MONUMENT BUTTE

4. LOCATION OF WELL
FOOTAGES AT SURFACE: 1937 FNL 0559 FWL
QTR/QTR, SECTION, TOWNSHIP, RANGE, MERIDIAN: Qtr/Qtr: SWNW Section: 32 Township: 08.0S Range: 17.0E Meridian: S

COUNTY: DUCHESNE

STATE: UTAH

11. CHECK APPROPRIATE BOXES TO INDICATE NATURE OF NOTICE, REPORT, OR OTHER DATA

TYPE OF SUBMISSION

- ☐ NOTICE OF INTENT — Approximate date work will start:
- ✓ SUBSEQUENT REPORT — Date of Work Completion: 11/1/2011
- ☐ SPUD REPORT — Date of Spud:
- ☐ DRILLING REPORT — Report Date:

TYPE OF ACTION

☐ ACIDIZE	☐ ALTER CASING	☐ CASING REPAIR
☐ CHANGE TO PREVIOUS PLANS	☐ CHANGE TUBING	☐ CHANGE WELL NAME
☐ CHANGE WELL STATUS	☐ COMMINGLE PRODUCING FORMATIONS	☐ CONVERT WELL TYPE
☐ DEEPEN	☐ FRACTURE TREAT	☐ NEW CONSTRUCTION
☐ OPERATOR CHANGE	☐ PLUG AND ABANDON	☐ PLUG BACK
☐ PRODUCTION START OR RESUME	☐ RECLAMATION OF WELL SITE	☐ RECOMPLETE DIFFERENT FORMATION
☐ REPERFORATE CURRENT FORMATION	☐ SIDETRACK TO REPAIR WELL	☐ TEMPORARY ABANDON
☐ TUBING REPAIR	☐ VENT OR FLARE	☐ WATER DISPOSAL
☐ WATER SHUTOFF	☐ SI TA STATUS EXTENSION	☐ APD EXTENSION
☐ WILDCAT WELL DETERMINATION	✓ OTHER	OTHER: 5 YR MIT

12. DESCRIBE PROPOSED OR COMPLETED OPERATIONS. Clearly show all pertinent details including dates, depths, volumes, etc.

On 10/05/2011 Nathan Wiser with the EPA was contacted concerning the 5 year MIT on the above listed well. On 11/01/2011 the casing was pressured up to 1445 psig and charted for 30 minutes with no pressure loss. The well was not injecting during the test. The tubing pressure was 1139 psig during the test. There was not an EPA representative available to witness the test.

EPA# UT20633-04468

Accepted by the Utah Division of Oil, Gas and Mining

FOR RECORD ONLY

NAME (PLEASE PRINT)	PHONE NUMBER	TITLE
Lucy Chavez-Naupoto	435 646-4874	Water Services Technician

SIGNATURE	DATE
N/A	11/3/2011

RECEIVED Nov. 03, 2011

Mechanical Integrity Test
Casing or Annulus Pressure Mechanical Integrity Test

U.S. Environmental Protection Agency
Underground Injection Control Program
999 18th Street, Suite 500 Denver, CO 80202-2466

EPA Witness: _____ Date: 11 / 1 / 11
Test conducted by: Lynn Monson
Others present: _____

Well Name: State 5-32-8-17 Type: ER SWD Status: AC TA UC
Field: Monument Butte
Location: SW/NW Sec: 32 T 8 N/(S) R 17 (E)/W County: Duchesne State: UT
Operator: Newfield
Last MIT: ___/___/___ Maximum Allowable Pressure: _____ PSIG

Is this a regularly scheduled test? [X] Yes [ ] No
Initial test for permit? [ ] Yes [X] No
Test after well rework? [ ] Yes [X] No
Well injecting during test? [ ] Yes [X] No If Yes, rate: _____ bpd

Pre-test casing/tubing annulus pressure: 0 psig

MIT DATA TABLE	Test #1	Test #2	Test #3
TUBING	*PRESSURE*		
Initial Pressure	1139 psig	psig	psig
End of test pressure	1139 psig	psig	psig
CASING / TUBING	*ANNULUS*	*PRESSURE*	
0 minutes	1445 psig	psig	psig
5 minutes	1445 psig	psig	psig
10 minutes	1445 psig	psig	psig
15 minutes	1445 psig	psig	psig
20 minutes	1445 psig	psig	psig
25 minutes	1445 psig	psig	psig
30 minutes	1445 psig	psig	psig
___ minutes	psig	psig	psig
___ minutes	psig	psig	psig
RESULT	[X] Pass [ ] Fail	[ ] Pass [ ] Fail	[ ] Pass [ ] Fail

Does the annulus pressure build back up after the test ? [ ] Yes [X] No

MECHANICAL INTEGRITY PRESSURE TEST

Additional comments for mechanical integrity pressure test, such as volume of fluid added to annulus and bled back at end of test, reason for failing test (casing head leak, tubing leak, other), etc.:

Signature of Witness: _____

RECEIVED Nov. 03, 2011

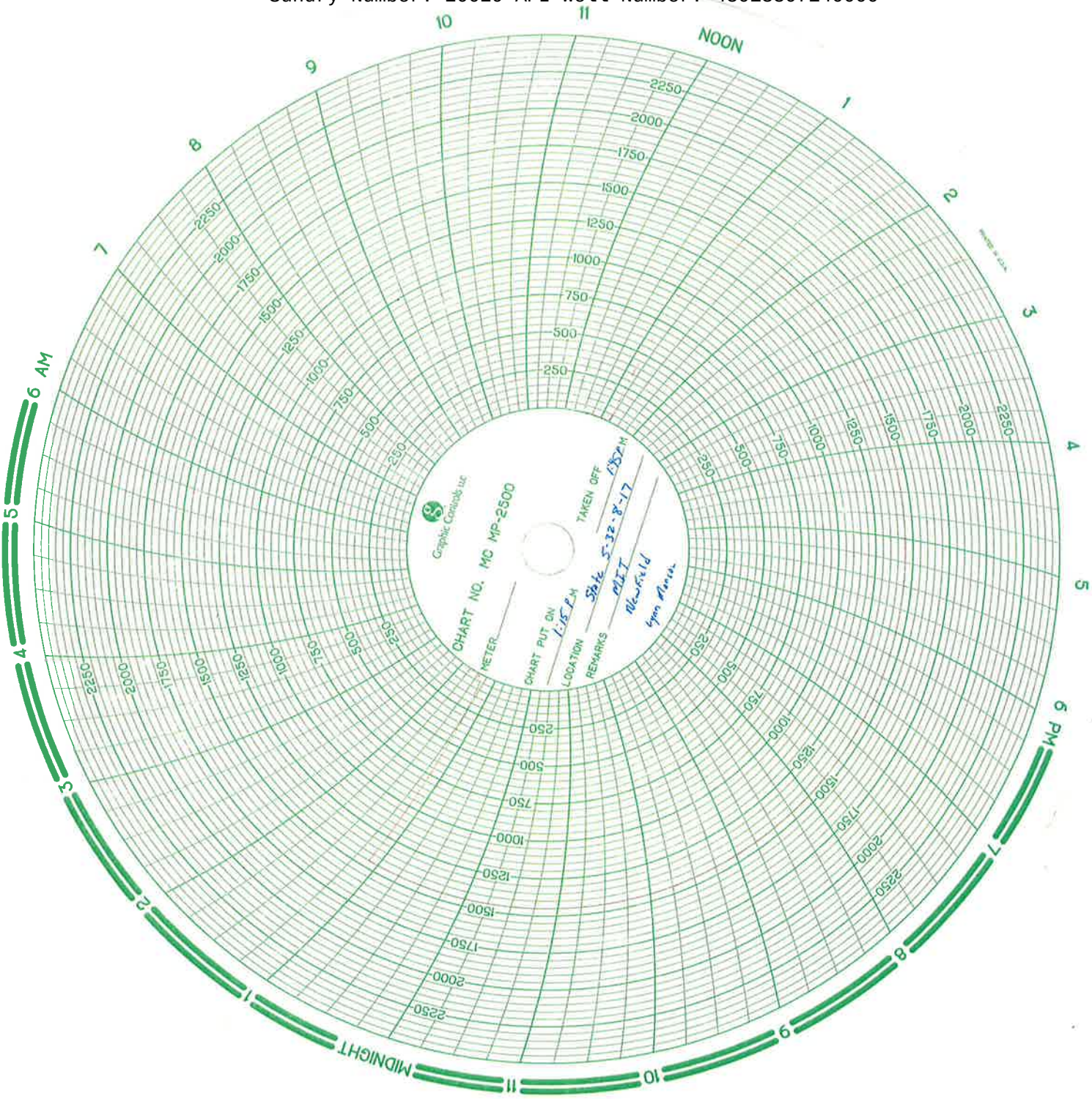

RECEIVED Nov. 03, 2011

Gilsonite State #5-32

Injection Wellbore Diagram

GBR IV 11/2/00

Well History:

12-12-82	Spud Well
12-30-82	Perf: 5,414'-5,420'
1-1-83	Frac LDC zone as follows: Totals 12,500 gal, 17,500# 20/40 sd Avg TP 3,700 @ 25 BPM
1-6-83	Perf: 5,330'-5,334', 5,338'-5,346'
1-7-83	Frac A-1 zone as follows: Totals 24,500 gal, 76,000# 20/40 sd Max TP 4,000 @ 30 BPM Avg TP 2,600 @ 30 BPM ISIP 2,000
1-12-83	Perf: 4,866'-4,874', 4,880'-4,888'
1-13-83	Frac D-1 zone as follows: Totals 24,500 gal, 76,000# 20/40 sd Max TP 3,150 @ 30 BPM Avg TP 2,500 @ 31 BPM ISIP 2,200
11/20/06	**Recompletion (new perfs)**
11/15/06	Acidize GB6 zone 4412'-4420 Perf broke @ 1500 pis @ .5 BPM. Pumped 10 bbls wtr @ 1400 psi .5 b pm. Open bypass & spot 220 gals acid & 15 bbls wtr. Shut bypass & inject acid @ 1300 pis @ .5 bpm.
11/15/06	Acidize GB4 zone 4372'-4378, 4361'-4366' Perf broke @ 1900 psi & back to 1300 psi @ .5 bpm. Pump 440 gals acid & 30 bbls wtr. Acid injected @ 1600 psi @ .5 bpm.
11/17/06	Frac LODC zone 5414'-5510' 35,000# of 20/40 snd in 309 bbls Lightning 17 frac fluid. Treated @ ave press of 4026 w/ ave rate of 14.1 bpm. ISIP was 2750 psi. Calc flush: 2184, Acutal flush: 1302
11/17/06	Frac B2 zone 5196'-5202' Total 15,000# of 20/40 sand in 163 bbls of lightning 17 frac fluid. Treated @ ave press of 4033 ave rate of 14.1 bpm. ISIP was 3550 psi. Calc flush: 1966, Acutal flush: 1176
11/17/06	Frac D2 zone 4943'-4946' Totals 12,964# of 20/40 sand in 137 bbls of lightning 17 frac fluid. Treated @ ave press of 3706 w/ ave rate 14.1 Calc flush: 1713, Acutal flush 1134

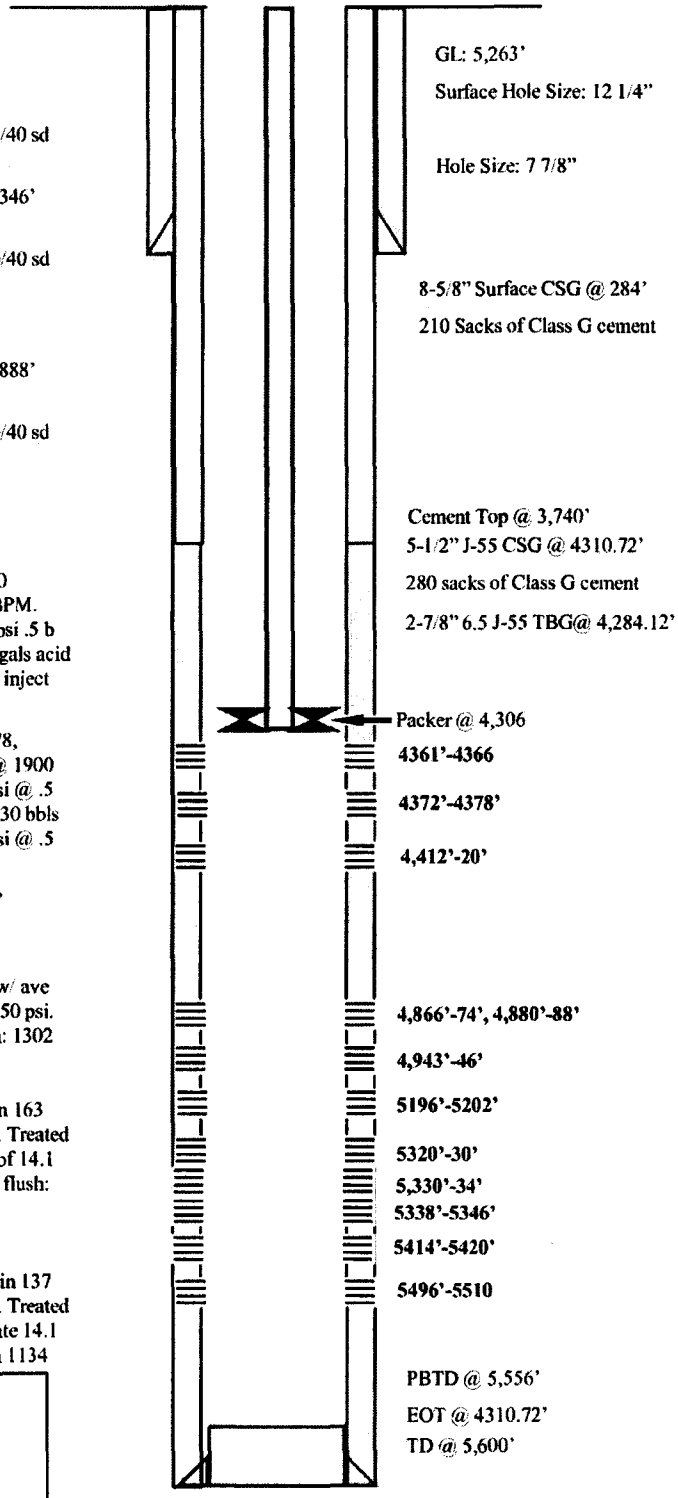

NEWFIELD

Gilsonite State #5-32
559 FWL 1937 FNL
SWNW Section 32-T8S-R17E
Duchesne Co, Utah
API #43-013-30714; Lease #ML-22060

JP 02/02/07

STATE OF UTAH
DEPARTMENT OF NATURAL RESOURCES
DIVISION OF OIL, GAS, AND MINING

FORM 9

5.LEASE DESIGNATION AND SERIAL NUMBER: ML-22060

SUNDRY NOTICES AND REPORTS ON WELLS

Do not use this form for proposals to drill new wells, significantly deepen existing wells below current bottom-hole depth, reenter plugged wells, or to drill horizontal laterals. Use APPLICATION FOR PERMIT TO DRILL form for such proposals.

6. IF INDIAN, ALLOTTEE OR TRIBE NAME:

7.UNIT or CA AGREEMENT NAME: GMBU (GRRV)

1. TYPE OF WELL Water Injection Well

8. WELL NAME and NUMBER: STATE 5-32

2. NAME OF OPERATOR: NEWFIELD PRODUCTION COMPANY

9. API NUMBER: 43013307140000

3. ADDRESS OF OPERATOR: Rt 3 Box 3630 , Myton, UT, 84052

PHONE NUMBER: 435 646-4825 Ext

9. FIELD and POOL or WILDCAT: MONUMENT BUTTE

4. LOCATION OF WELL
FOOTAGES AT SURFACE: 1937 FNL 0559 FWL
QTR/QTR, SECTION, TOWNSHIP, RANGE, MERIDIAN: Qtr/Qtr: SWNW Section: 32 Township: 08.0S Range: 17.0E Meridian: S

COUNTY: DUCHESNE

STATE: UTAH

11. CHECK APPROPRIATE BOXES TO INDICATE NATURE OF NOTICE, REPORT, OR OTHER DATA

TYPE OF SUBMISSION

- ☐ NOTICE OF INTENT — Approximate date work will start:
- ✓ SUBSEQUENT REPORT — Date of Work Completion: 9/28/2016
- ☐ SPUD REPORT — Date of Spud:
- ☐ DRILLING REPORT — Report Date:

TYPE OF ACTION

☐ ACIDIZE	☐ ALTER CASING	☐ CASING REPAIR
☐ CHANGE TO PREVIOUS PLANS	☐ CHANGE TUBING	☐ CHANGE WELL NAME
☐ CHANGE WELL STATUS	☐ COMMINGLE PRODUCING FORMATIONS	☐ CONVERT WELL TYPE
☐ DEEPEN	☐ FRACTURE TREAT	☐ NEW CONSTRUCTION
☐ OPERATOR CHANGE	☐ PLUG AND ABANDON	☐ PLUG BACK
☐ PRODUCTION START OR RESUME	☐ RECLAMATION OF WELL SITE	☐ RECOMPLETE DIFFERENT FORMATION
☐ REPERFORATE CURRENT FORMATION	☐ SIDETRACK TO REPAIR WELL	☐ TEMPORARY ABANDON
☐ TUBING REPAIR	☐ VENT OR FLARE	☐ WATER DISPOSAL
☐ WATER SHUTOFF	☐ SI TA STATUS EXTENSION	☐ APD EXTENSION
☐ WILDCAT WELL DETERMINATION	✓ OTHER	OTHER: 5 YR MIT

12. DESCRIBE PROPOSED OR COMPLETED OPERATIONS. Clearly show all pertinent details including dates, depths, volumes, etc.

5 YR MIT performed on the above listed well. On 09/28/2016 the casing was pressured up to 1119 psig and charted for 30 minutes with no pressure loss. The well was not injecting during the test. The tbg pressure was 1468 psig during the test. There was not an EPA representative available to witness the test. EPA #UT22197-04468

Accepted by the Utah Division of Oil, Gas and Mining
FOR RECORD ONLY
October 11, 2016

NAME (PLEASE PRINT)	PHONE NUMBER	TITLE
Lucy Chavez-Naupoto	435 646-4874	Water Services Technician

SIGNATURE	DATE
N/A	9/29/2016

RECEIVED: Sep. 29, 2016

Mechanical Integrity Test
Casing or Annulus Pressure Mechanical Integrity Test

U.S. Environmental Protection Agency
Underground Injection Control Program
999 18th Street, Suite 500 Denver, CO 80202-2466

EPA Witness: _____ Date: 9 / 28 / 16
Test conducted by: PETE MONTAGUE
Others present: _____

-01468

Well Name: GILSONITE STATE 5-32-8-17 Type: ER SWD Status: AC TA UC
Field: Monument Butte
Location: 5 Sec: 32 T 8 N/(S) R 17 (E)/W County: DUCHESNE State: UT
Operator: NEWFIELD
Last MIT: / / Maximum Allowable Pressure: 1550 PSIG

Is this a regularly scheduled test? [X] Yes [ ] No
Initial test for permit? [ ] Yes [X] No
Test after well rework? [ ] Yes [X] No
Well injecting during test? [ ] Yes [X] No If Yes, rate: _____ bpd

Pre-test casing/tubing annulus pressure: 0 psig

MIT DATA TABLE	Test #1	Test #2	Test #3
TUBING	*PRESSURE*		
Initial Pressure	1470 psig	psig	psig
End of test pressure	1468 psig	psig	psig
CASING / TUBING	*ANNULUS*	*PRESSURE*	
0 minutes	1120 psig	psig	psig
5 minutes	1120 psig	psig	psig
10 minutes	1119 psig	psig	psig
15 minutes	1119 psig	psig	psig
20 minutes	1119 psig	psig	psig
25 minutes	1119 psig	psig	psig
30 minutes	1119 psig	psig	psig
_____ minutes	psig	psig	psig
_____ minutes	psig	psig	psig
RESULT	[X] Pass [ ] Fail	[ ] Pass [ ] Fail	[ ] Pass [ ] Fail

Does the annulus pressure build back up after the test ? [ ] Yes [X] No

MECHANICAL INTEGRITY PRESSURE TEST

Additional comments for mechanical integrity pressure test, such as volume of fluid added to annulus and bled back at end of test, reason for failing test (casing head leak, tubing leak, other), etc.:

Signature of Witness: Pete Montague

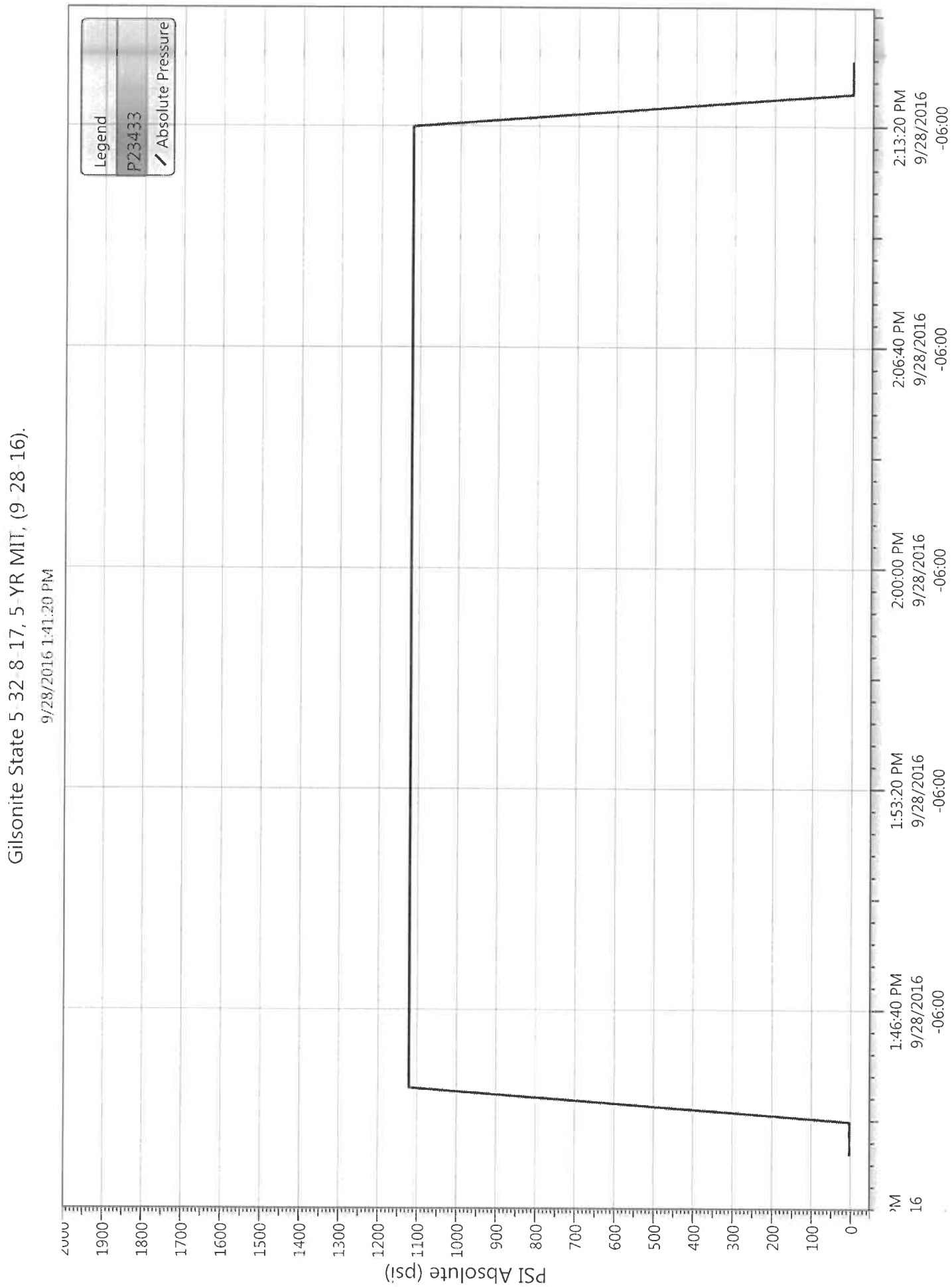
Gilsonite State 5-32-8-17, 5-YR MIT, (9-28-16).
9/28/2016 1:41:20 PM
Legend
P23433
Absolute Pressure
PSI Absolute (psi)
2000
1900
1800
1700
1600
1500
1400
1300
1200
1100
1000
900
800
700
600
500
400
300
200
100
0
'M
16
1:46:40 PM
9/28/2016
-06:00
1:53:20 PM
9/28/2016
-06:00
2:00:00 PM
9/28/2016
-06:00
2:06:40 PM
9/28/2016
-06:00
2:13:20 PM
9/28/2016
-06:00