Form 9-331 C
(May 1963)

SUBMIT IN TRIPLICATE*
(Other instructions on reverse side)

Form approved.
Budget Bureau No. 42-R1425.

UNITED STATES
DEPARTMENT OF THE INTERIOR
GEOLOGICAL SURVEY

APPLICATION FOR PERMIT TO DRILL, DEEPEN, OR PLUG BACK

1a. TYPE OF WORK: DRILL ☐ DEEPEN ☐ PLUG BACK ☐

b. TYPE OF WELL: OIL WELL [X] GAS WELL ☐ OTHER SINGLE ZONE ☐ MULTIPLE ZONE ☐

2. NAME OF OPERATOR: Shell Oil Company

3. ADDRESS OF OPERATOR: P. O. Box 831 Houston, Texas 77001

4. LOCATION OF WELL (Report location clearly and in accordance with any State requirements.*)
At surface: ~~1594'~~ 1015' FEL ~~925'~~ 1053' FNL Section 15, T1S, R3W, U.S.M. ~~NWNE~~ NE NE
At proposed prod. zone: Same

14. DISTANCE IN MILES AND DIRECTION FROM NEAREST TOWN OR POST OFFICE*: 5 miles north from Bluebell, Utah

5. LEASE DESIGNATION AND SERIAL NO.: ~~Shell Lease #30188 30188~~
6. IF INDIAN, ALLOTTEE OR TRIBE NAME:
7. AGREEMENT NAME: Altamont
8. FARM OR LEASE NAME:
9. WELL NO.: 1-15A3
10. FIELD AND POOL, OR WILDCAT: undesignated
11. SEC., T., R., M., OR BLK. AND SURVEY OR AREA: Sec. 15, T1S, R3W, U.S.M.
12. COUNTY OR PARISH: Duchesne
13. STATE: Utah

15. DISTANCE FROM PROPOSED* LOCATION TO NEAREST PROPERTY OR LEASE LINE, FT. (Also to nearest drlg. unit line, if any): 640
16. NO. OF ACRES IN LEASE: 640
17. NO. OF ACRES ASSIGNED TO THIS WELL: 640
18. DISTANCE FROM PROPOSED LOCATION* TO NEAREST WELL, DRILLING, COMPLETED, OR APPLIED FOR, ON THIS LEASE, FT.:
19. PROPOSED DEPTH: 15,800 Wasatch
20. ROTARY OR CABLE TOOLS: Rotary
21. ELEVATIONS (Show whether DF, RT, GR, etc.): 6398
22. APPROX. DATE WORK WILL START*:

23. PROPOSED CASING AND CEMENTING PROGRAM

SIZE OF HOLE	SIZE OF CASING	WEIGHT PER FOOT	SETTING DEPTH	QUANTITY OF CEMENT
17½"	13 3/8"	54#	0-300	Cement to Surface
12¼"	9 5/8"	47#	7700 ±	Cement to 6000' ±
8 3/4"	7"	26#	11800 ±	Cement to 7500' ±
6 1/8"	5" Liner		15,800	

5" Liner overlaps 7" casing 200'

APPROVED BY THE DIVISION OF OIL, GAS, AND MINING
DATE: 4-24-80
BY: M. J. Minder

Providing proper BOP equipment is used

RECEIVED
APR 22 1980
DIVISION OF OIL, GAS & MINING

IN ABOVE SPACE DESCRIBE PROPOSED PROGRAM: If proposal is to deepen or plug back, give data on present productive zone and proposed new productive zone. If proposal is to drill or deepen directionally, give pertinent data on subsurface locations and measured and true vertical depths. Give blowout preventer program, if any.

24.
SIGNED Steve Stewart TITLE Agent DATE

(This space for Federal or State office use)

PERMIT NO. 43-013-30529 APPROVAL DATE 4/24/80

APPROVED BY TITLE DATE
CONDITIONS OF APPROVAL, IF ANY:

*See Instructions On Reverse Side

T 1 S, R 3 W, U.S.B. & M.

PROJECT

SHELL OIL COMPANY

Well location, #1-15A3, located as shown in the NW 1/4 NE 1/4 Section 15, T1S, R3W, U.S.B.&M. Duchesne County, Utah.

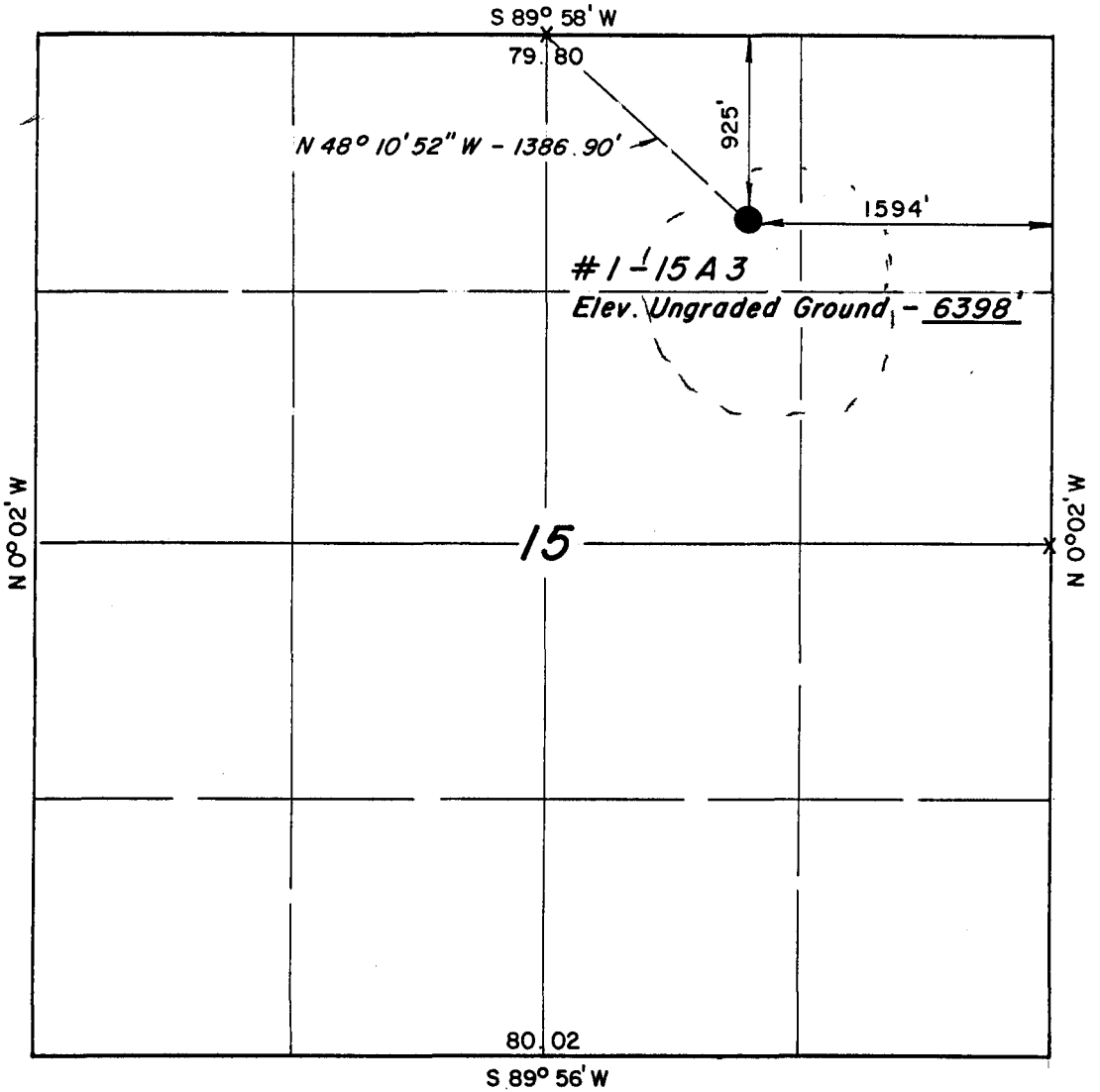

X = Section Corners Located

CERTIFICATE

THIS IS TO CERTIFY THAT THE ABOVE PLAT WAS PREPARED FROM FIELD NOTES OF ACTUAL SURVEYS MADE BY ME OR UNDER MY SUPERVISION AND THAT THE SAME ARE TRUE AND CORRECT TO THE BEST OF MY KNOWLEDGE AND BELIEF.

Dave Stewart

REGISTERED LAND SURVEYOR
REGISTRATION Nº 3154
STATE OF UTAH

UINTAH ENGINEERING & LAND SURVEYING
P. O. BOX Q ~ 110 EAST - FIRST SOUTH
VERNAL, UTAH - 84078

SCALE 1" = 1000'	DATE 4 / 21 / 80
PARTY M.S. K.H. B.F.W.	REFERENCES GLO Plat
WEATHER Windy & Cool	FILE SHELL OIL

EXHIBIT "A"

TEN-POINT COMPLIANCE PROGRAM

NTL-6

Attached to Form 9-331C

WELL NAME: 1-15A3

LOCATION:

Duchesne COUNTY, STATE OF Utah

1. Geologic Surface Formation

Duchesne River

2. Estimated Tops of Important Geologic Markers

TGR 1 7200 (Wasatch) RED BEDS 10790
TGR 3 10790

3. Estimated Depths of Anticipated Water, Oil, Gas or Minerals

Water - 800' to 2000'
Oil and Gas, 11450 - Wasatch to TD (15,200')

4. Proposed Casing Program

(a) Surface casing: 13 3/8" 50# K55, STAC at 300' ± cmt'd to surface.
9 5/8" 40' ± K-55, ST&C at 6500' ± cmt'd to 5000' bullhead at top.

(b) Production casing:

7" 26 & 29# S95, LT&C at 12000' ± cmt'd to 7500'
5" 18# N80SFJP Liner to TD cmt'd to Lap

5. Minimum Specifications for Pressure Control

EXHIBIT "B" is a schematic diagram of the blowout preventer equipment. The BOP's will be hydraulically tested to the full working pressure after nippling up and after any use under pressure. Pipe rams will be operationally checked each 24 hour period, as will blind rams each time pipe is pulled out of the hole. Such checks of BOP will be noted on daily drilling reports.

Accessories to BOP include a kelly cock, floor safety valve, drill string BOP and choke manifold with pressure rating equivalent to the BOP stack.

6. Type and Characteristics of the Proposed Circulating Muds

0 - 300'	Fresh Water Mud
300 - 6500'	Aereated Clear Water w/Lime and X-100
6500 - 11000	Clear Water s/Lime and X-100
11000 - TD	Lime Treated Mud (Adequate Barite on Location to control Geo Pressures.)

7. Auxiliary Equipment to be Used

5000# WP Safety Valve, inside BOP, Upper Kelly Cock, Mud Monitoring Equipment (see Exhibit A)

8. Testing, Logging, and Coring Programs

(a) Tests: No DST's

(b) Logging program:

DIL,SP,GR 300' - 600'
DIL, CNL, GR-CAL, BHCS, GR 6000' - TD

(c) Coring: No Cores

(d) Production:

If production is obtained, producing formation will be selectively perforated and treated.

9. Anticipated Abnormal Pressures or Temperatures

Abnormal pressures (Geo Pressures) at base of Red Beds (14,300'±)
Maximum Pressure 9000 PSI at TD

10. Anticipated Starting Date and Duration of the Operations

The anticipated *starting date is to be approximately May 15, 1980 or as soon as possible after examination and approval of drilling requirements. Operations should be completed within 90 days from spudding to rig release.

* Location preparation clearance requested as soon as possible pending possible winter restrictions.

BLOW[redacted] PREVENTION, WELLHEAD, AND AU[redacted]IARY EQUIPMENT

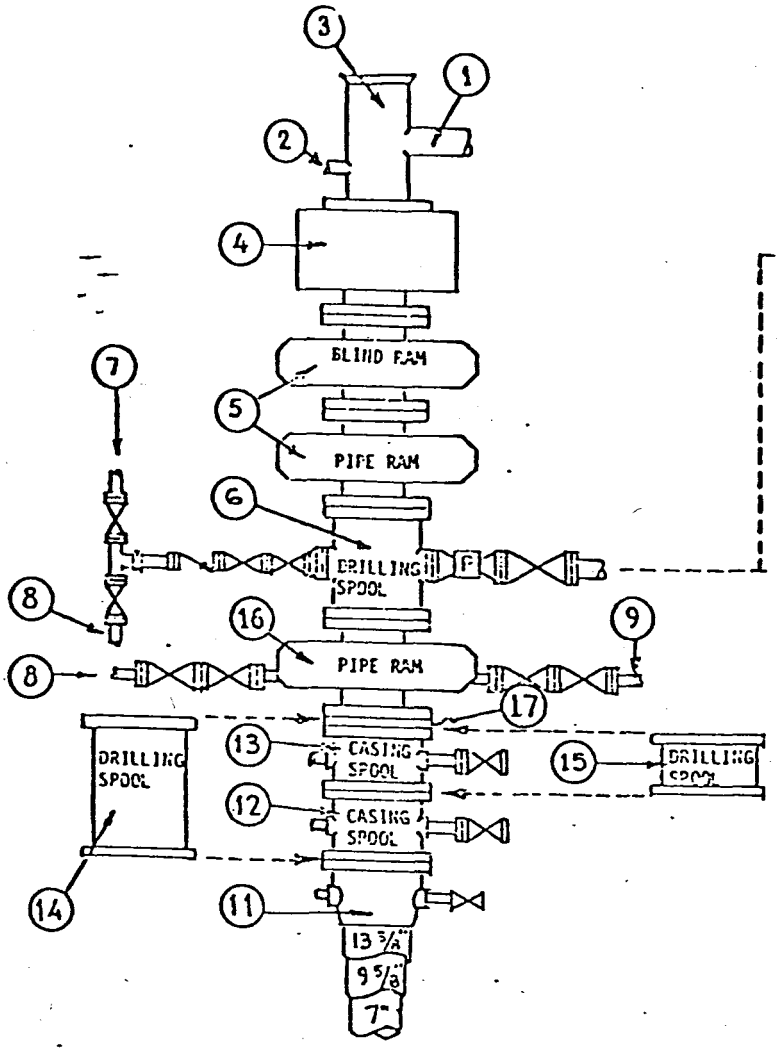

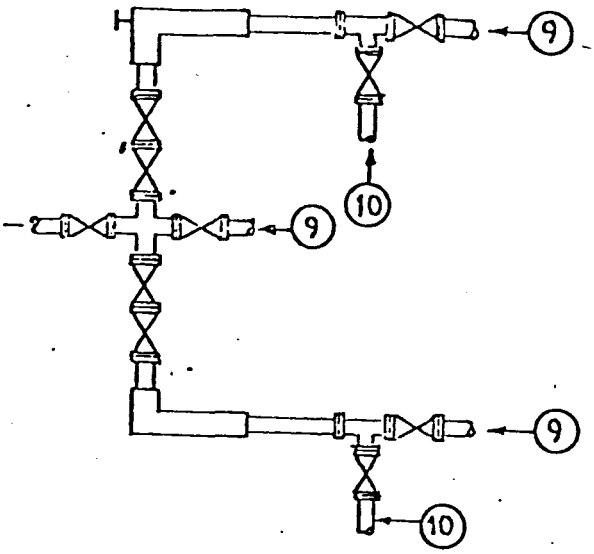

Auxiliary Equipment and Notes:

1. A 5000 psi WP safety valve, properly subed, shall be on the floor at all times.
2. An inside BOP shall be on the floor at all times.
3. An upper kelly cock to be used at all times.
4. Pipe rams shall be sized to match the drillpipe or casing being run in the hole.
5. Mud system monitoring equipment will be installed (with derrick floor indicators) and used throughout the period of drilling after mud up or upon reaching a depth at which abnormal pressures could occur.
6. BOP equipment shall be pressure tested upon installation and periodically thereafter. Operational test of ram type preventers shall be performed on each trip.

Item No.	Description
1	Mud return flow line
2	Fillup line - min. 2"
3	Drilling Nipple
4	13-5/8" - 5000 psi WP-Annular Bag Type BOP - Shaffer or Hydril
5	Two single or one dual - hydraulically operated - 13-5/8" - 5000 psi WP - Ram Type BOP - Cameron Type U or Shaffer LWS
6	13-5/8" - 5000 psi WP Drilling Spool
7	To mud pumps
8	To remote pump in station
9	To burn pit
10	To gas buster
11	12" - 3000 psi WP-Slip On and Weld-Casing Head
12	12" - 3000 psi WP x 10" - 5000 psi WP Casing Spool
13	10" - 5000 psi WP x 10" - 5000 psi WP Casing Spool
14	12" - 3000 psi WP x 13-5/8" - 5000 psi WP Drilling Spool - while Drilling 12-1/4" hole
15	10" - 5000 psi WP x 10" - 5000 psi WP Drilling Spool - while Drilling 8-3/4" hole
16	13-5/8" - 5000 psi - Hydraulically Operated - Cameron Type U - Ram Type BOP
17	13-5/8" - 5000 psi WP x 10" - 5000 psi WP Double Studded Adapter Flange

Well Name [redacted] 1-15B3

Field ALTAMONT

County DUCHESNE

State UTAH

Attachment No. EXHIBIT "B"

SHELL OIL COMPANY

1 - 15 A 3

TOPO. MAP "B"

N

SCALE 1" = 2000'

ROAD CLASSIFICATION

Medium-duty — Light-duty

Unimproved dirt

State Route

UTAH

SAMPLE LOCATION

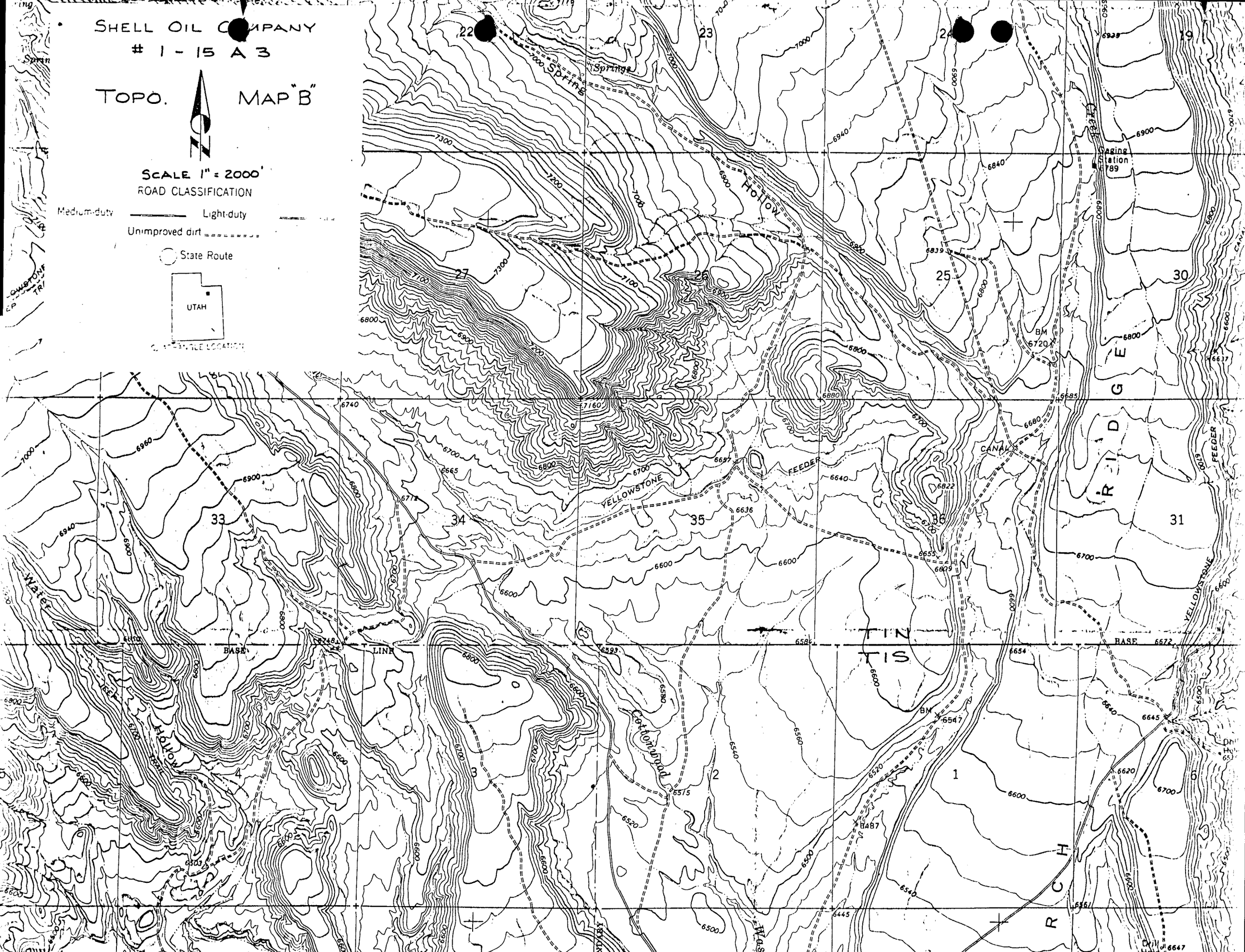

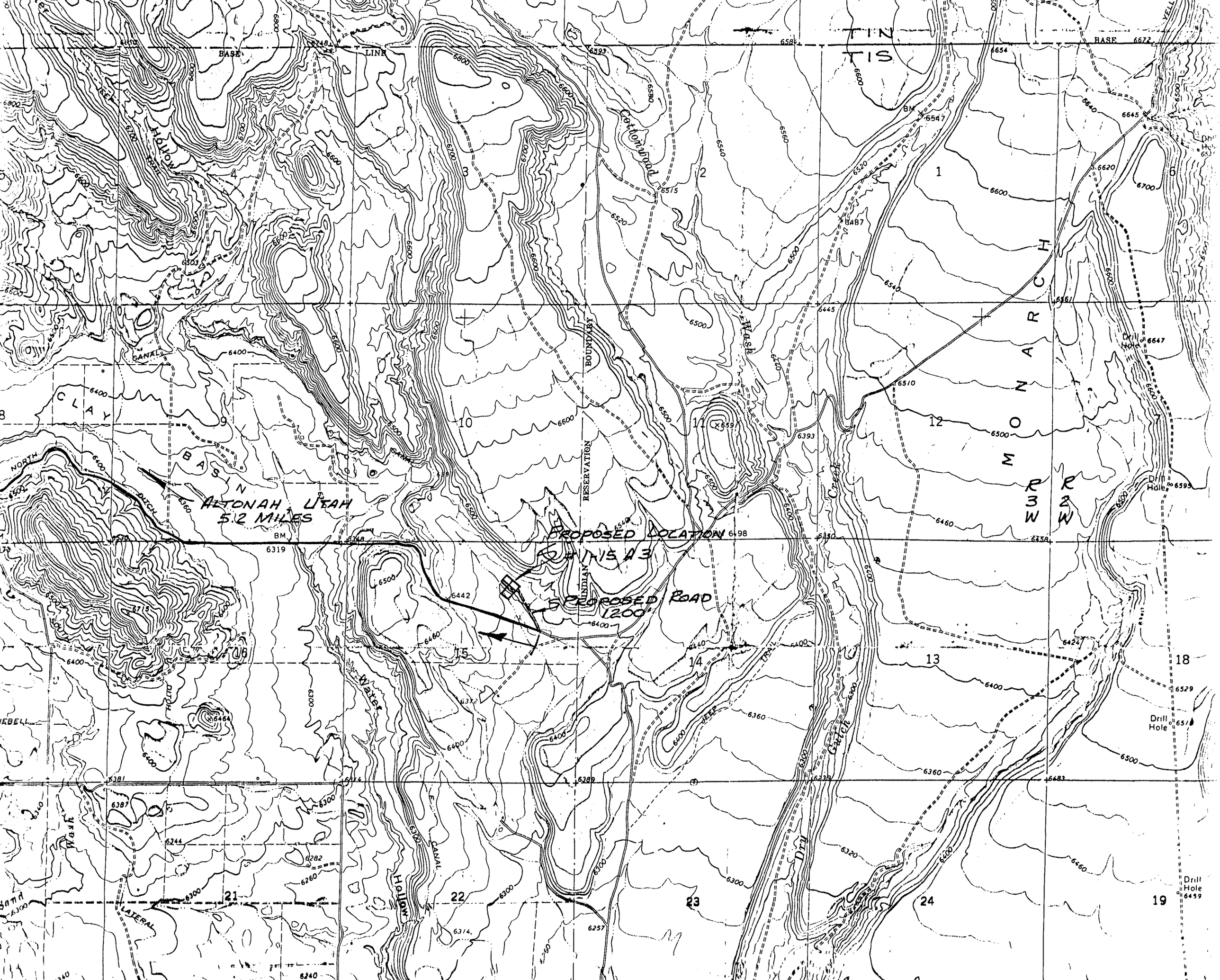
TIN
TIS
BASE
LINE
Cottonwood
Wash
Hollow
CLAY
BASIN
NORTH
DITCH
CANAL
BOUNDARY
RESERVATION
INDIAN
ALTONAH UTAH
5.2 MILES
PROPOSED LOCATION
SHIS A3
PROPOSED ROAD
1200'
Water
Hollow
CANAL
LATERAL
Dry
Gulch
JEEP
TRAIL
Drill Hole
T 3 S
R 2 W
R 3 W

SHELL OIL COMPANY

#1-15 A3

LOCATION LAYOUT & CUT SHEET

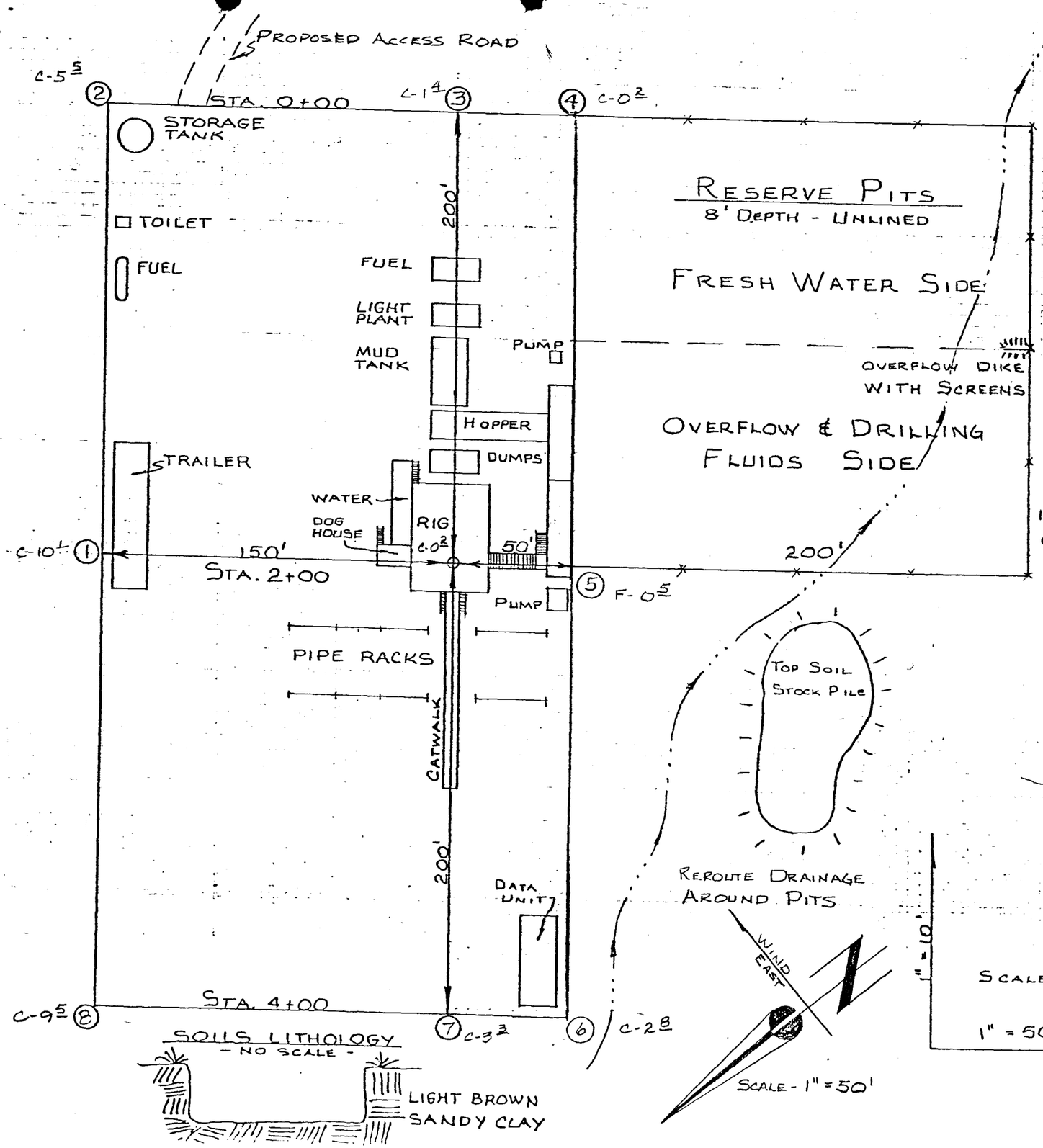

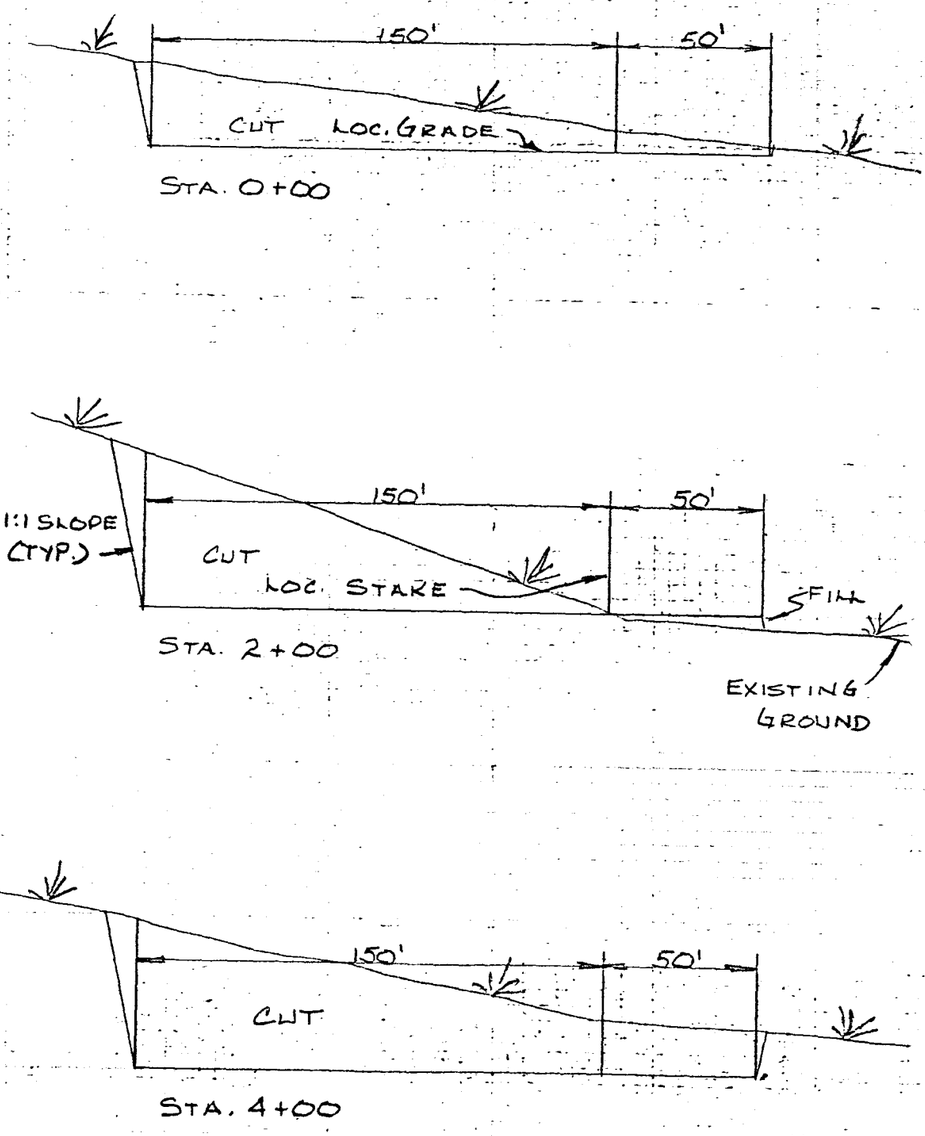

APPROX. YARDAGES

CUT - 12,525 CU. YDS.

FILL - 70 CU. YDS.

EXHIBIT "A"

TEN-POINT COMPLIANCE PROGRAM

NTL-6

Attached to Form 9-331C

WELL NAME: 1-15A3

LOCATION:

Duchesne COUNTY, STATE OF Utah

1. Geologic Surface Formation

Duchesne River

2. Estimated Tops of Important Geologic Markers

TGR 1 7200 (Wasatch) RED BEDS 10790
TGR 3 10790

3. Estimated Depths of Anticipated Water, Oil, Gas or Minerals

Water - 800' to 2000'
Oil and Gas, 11450 - Wasatch to TD (15,200')

4. Proposed Casing Program

(a) Surface casing: 13 3/8" 50# K55, STAC at 300' ± cmt'd to surface.
9 5/8" 40' ± K-55, ST&C at 6500' ± cmt'd to 5000' bullhead at top.

(b) Production casing:

7" 26 & 29# S95, LT&C at 12000' ± cmt'd to 7500'
5" 18# N80SFJP Liner to TD cmt'd to Lap

5. Minimum Specifications for Pressure Control

EXHIBIT "B" is a schematic diagram of the blowout preventer equipment. The BOP's will be hydraulically tested to the full working pressure after nippling up and after any use under pressure. Pipe rams will be operationally checked each 24 hour period, as will blind rams each time pipe is pulled out of the hole. Such checks of BOP will be noted on daily drilling reports.

Accessories to BOP include a kelly cock, floor safety valve, drill string BOP and choke manifold with pressure rating equivalent to the BOP stack.

6. Type and Characteristics of the Proposed Circulating Muds

0 - 300'	Fresh Water Mud
300 - 6500'	Aereated Clear Water w/Lime and X-100
6500 - 11000	Clear Water s/Lime and X-100
11000 - TD	Lime Treated Mud (Adequate Barite on Location to control Geo Pressures.)

7. Auxiliary Equipment to be Used

5000# WP Safety Valve, inside BOP, Upper Kelly Cock, Mud Monitoring Equipment (see Exhibit A)

8. Testing, Logging, and Coring Programs

(a) Tests: No DST's

(b) Logging program:

DIL,SP,GR 300' - 600'
DIL, CNL, GR-CAL, BHCS, GR 6000' - TD

(c) Coring: No Cores

(d) Production:

If production is obtained, producing formation will be selectively perforated and treated.

9. Anticipated Abnormal Pressures or Temperatures

Abnormal pressures (Geo Pressures) at base of Red Beds (14,300'±)
Maximum Pressure 9000 PSI at TD

10. Anticipated Starting Date and Duration of the Operations

The anticipated *starting date is to be approximately May 15, 1980 or as soon as possible after examination and approval of drilling requirements. Operations should be completed within 90 days from spudding to rig release.

* Location preparation clearance requested as soon as possible pending possible winter restrictions.

BLOW[redacted] PREVENTION, WELLHEAD, AND AU[redacted]IARY EQUIPMENT

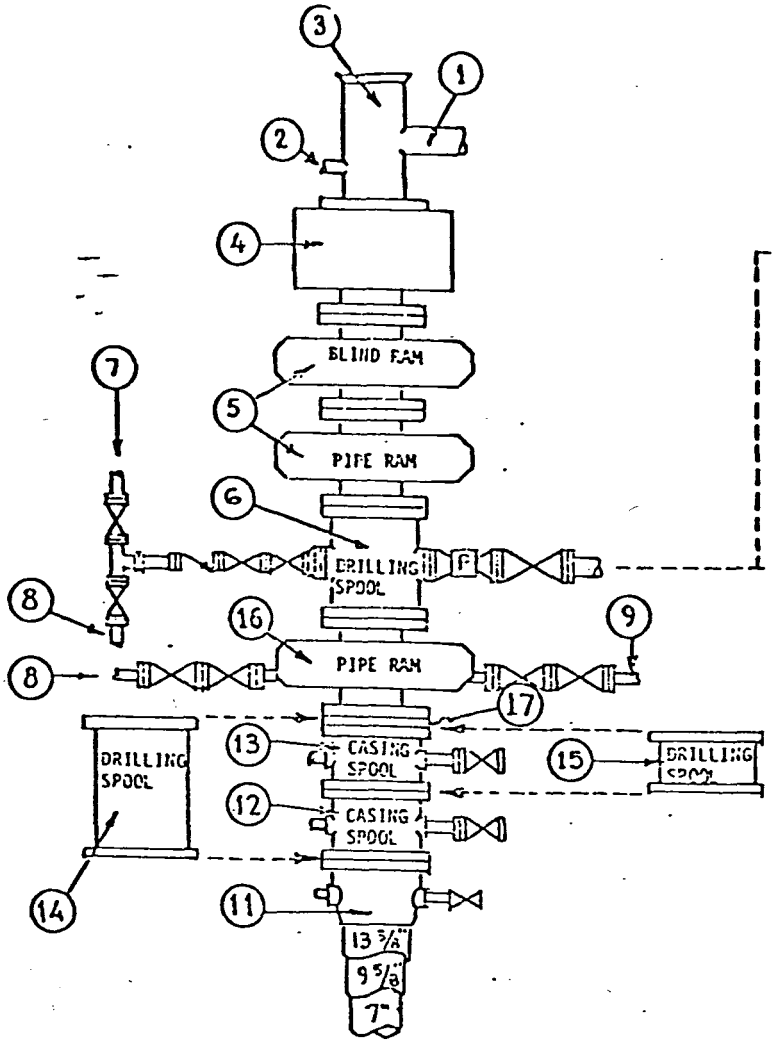

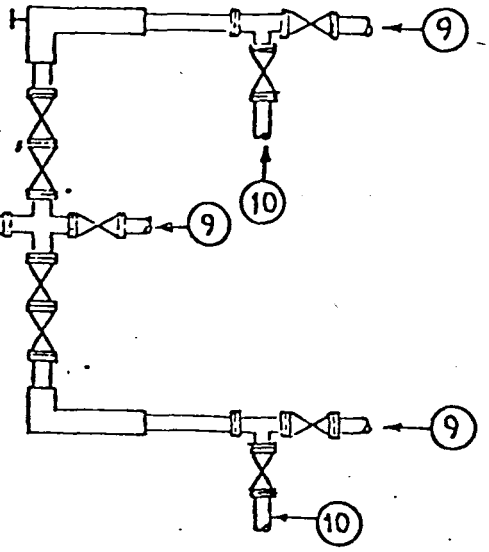

Auxiliary Equipment and Notes:

1. A 5000 psi WP safety valve, properly subed, shall be on the floor at all times.
2. An inside BOP shall be on the floor at all times.
3. An upper kelly cock to be used at all times.
4. Pipe rams shall be sized to match the drillpipe or casing being run in the hole.
5. Mud system monitoring equipment will be installed (with derrick floor indicators) and used throughout the period of drilling after mud up or upon reaching a depth at which abnormal pressures could occur.
6. BOP equipment shall be pressure tested upon installation and periodically thereafter. Operational test of ram type preventers shall be performed on each trip.

Item No.	Description
1	Mud return flow line
2	Fillup line - min. 2"
3	Drilling Nipple
4	13-5/8" - 5000 psi WP-Annular Bag Type BOP - Shaffer or Hydril
5	Two single or one dual - hydraulically operated - 13-5/8" - 5000 psi WP - Ram Type BOP - Cameron Type U or Shaffer LWS
6	13-5/8" - 5000 psi WP Drilling Spool
7	To mud pumps
8	To remote pump in station
9	To burn pit
10	To gas buster
11	12" - 3000 psi WP-Slip On and Weld-Casing Head
12	12" - 3000 psi WP x 10" - 5000 psi WP Casing Spool
13	10" - 5000 psi WP x 10" - 5000 psi WP Casing Spool
14	12" - 3000 psi WP x 13-5/8" - 5000 psi WP Drilling Spool - while Drilling 12-1/4" hole
15	10" - 5000 psi WP x 10" - 5000 psi WP Drilling Spool - while Drilling 8-3/4" hole
16	13-5/8" - 5000 psi - Hydraulically Operated - Cameron Type U - Ram Type BOP
17	13-5/8" - 5000 psi WP x 10" - 5000 psi WP Double Studded Adapter Flange

Well Name [redacted] 1-15B3

Field ALTAMONT

County DUCHESNE

State UTAH

Attachment No. EXHIBIT "B"

EXHIBIT "A"

TEN-POINT COMPLIANCE PROGRAM

NTL-6

Attached to Form 9-331C

WELL NAME: 1-15A3

LOCATION:

Duchesne COUNTY, STATE OF Utah

1. Geologic Surface Formation

Duchesne River

2. Estimated Tops of Important Geologic Markers

TGR 1 7200 (Wasatch) RED BEDS 10790
TGR 3 10790

3. Estimated Depths of Anticipated Water, Oil, Gas or Minerals

Water - 800' to 2000'
Oil and Gas, 11450 - Wasatch to TD (15,200')

4. Proposed Casing Program

(a) Surface casing: 13 3/8" 50# K55, STAC at 300' ± cmt'd to surface.
9 5/8" 40' ± K-55, ST&C at 6500' ± cmt'd to 5000' bullhead at top.

(b) Production casing:

7" 26 & 29# S95, LT&C at 12000' ± cmt'd to 7500'
5" 18# N80SFJP Liner to TD cmt'd to Lap

5. Minimum Specifications for Pressure Control

EXHIBIT "B" is a schematic diagram of the blowout preventer equipment. The BOP's will be hydraulically tested to the full working pressure after nippling up and after any use under pressure. Pipe rams will be operationally checked each 24 hour period, as will blind rams each time pipe is pulled out of the hole. Such checks of BOP will be noted on daily drilling reports.

Accessories to BOP include a kelly cock, floor safety valve, drill string BOP and choke manifold with pressure rating equivalent to the BOP stack.

6. Type and Characteristics of the Proposed Circulating Muds

0 - 300'	Fresh Water Mud
300 - 6500'	Aereated Clear Water w/Lime and X-100
6500 - 11000	Clear Water s/Lime and X-100
11000 - TD	Lime Treated Mud (Adequate Barite on Location to control Geo Pressures.)

7. Auxiliary Equipment to be Used

5000# WP Safety Valve, inside BOP, Upper Kelly Cock, Mud Monitoring Equipment (see Exhibit A)

8. Testing, Logging, and Coring Programs

(a) Tests: No DST's

(b) Logging program:

DIL,SP,GR 300' - 600'
DIL, CNL, GR-CAL, BHCS, GR 6000' - TD

(c) Coring: No Cores

(d) Production:

If production is obtained, producing formation will be selectively perforated and treated.

9. Anticipated Abnormal Pressures or Temperatures

Abnormal pressures (Geo Pressures) at base of Red Beds (14,300'±)
Maximum Pressure 9000 PSI at TD

10. Anticipated Starting Date and Duration of the Operations

The anticipated *starting date is to be approximately May 15, 1980 or as soon as possible after examination and approval of drilling requirements. Operations should be completed within 90 days from spudding to rig release.

* Location preparation clearance requested as soon as possible pending possible winter restrictions.

BLOW[redacted] PREVENTION, WELLHEAD, AND AU[redacted]IARY EQUIPMENT

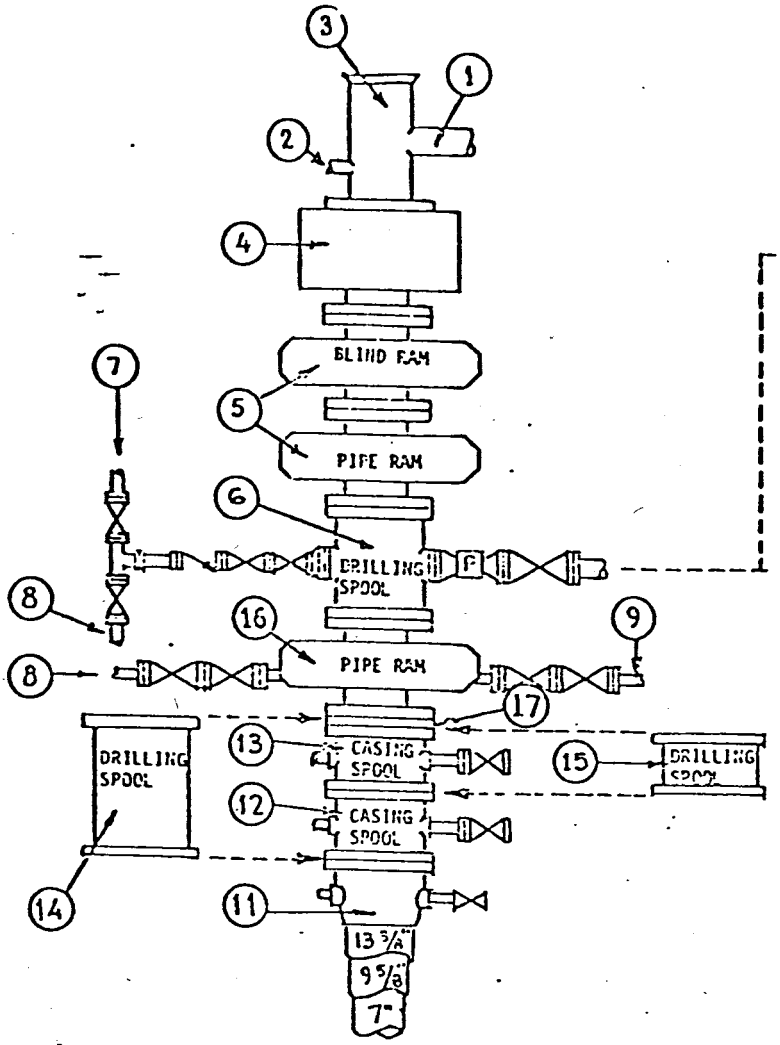

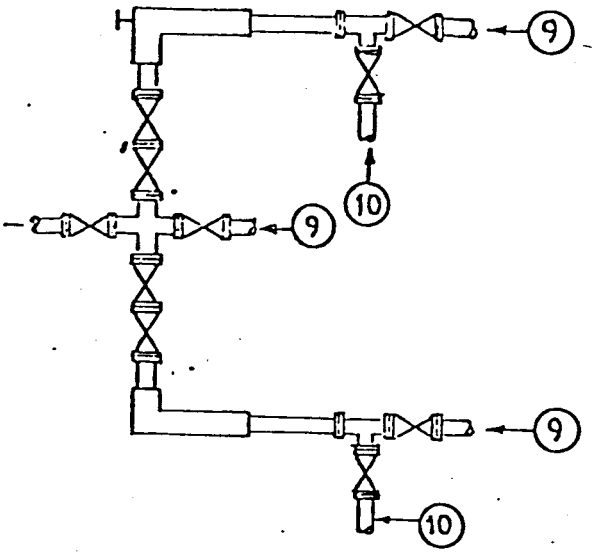

Auxiliary Equipment and Notes:

1. A 5000 psi WP safety valve, properly subed, shall be on the floor at all times.
2. An inside BOP shall be on the floor at all times.
3. An upper kelly cock to be used at all times.
4. Pipe rams shall be sized to match the drillpipe or casing being run in the hole.
5. Mud system monitoring equipment will be installed (with derrick floor indicators) and used throughout the period of drilling after mud up or upon reaching a depth at which abnormal pressures could occur.
6. BOP equipment shall be pressure tested upon installation and periodically thereafter. Operational test of ram type preventers shall be performed on each trip.

Item No.	Description
1	Mud return flow line
2	Fillup line - min. 2"
3	Drilling Nipple
4	13-5/8" - 5000 psi WP-Annular Bag Type BOP - Shaffer or Hydril
5	Two single or one dual - hydraulically operated - 13-5/8" - 5000 psi WP - Ram Type BOP - Cameron Type U or Shaffer LWS
6	13-5/8" - 5000 psi WP Drilling Spool
7	To mud pumps
8	To remote pump in station
9	To burn pit
10	To gas buster
11	12" - 3000 psi WP-Slip On and Weld-Casing Head
12	12" - 3000 psi WP x 10" - 5000 psi WP Casing Spool
13	10" - 5000 psi WP x 10" - 5000 psi WP Casing Spool
14	12" - 3000 psi WP x 13-5/8" - 5000 psi WP Drilling Spool - while Drilling 12-1/4" hole
15	10" - 5000 psi WP x 10" - 5000 psi WP Drilling Spool - while Drilling 8-3/4" hole
16	13-5/8" - 5000 psi - Hydraulically Operated - Cameron Type U - Ram Type BOP
17	13-5/8" - 5000 psi WP x 10" - 5000 psi WP Double Studded Adapter Flange

Well Name [redacted] 1-15B3

Field ALTAMONT

County DUCHESNE

State UTAH

Attachment No. EXHIBIT "B"

** FILE NOTATIONS **

DATE: April 22, 1980

Operator: Shell Oil Company

Well No: Altamont #1-15A3

Location: Sec. 15 T. 15 R. 3W County: Duchesne

File Prepared: ✓ Entered on N.I.D.: ✓

Card Indexed: ✓ Completion Sheet: ✓

✓ API Number 43-013-30529

CHECKED BY:

Geological Engineer:

Petroleum Engineer: M.J. Minder 4-24-80 Providing proper BOP equipment is used

Director:

APPROVAL LETTER:

Bond Required: ✓ Survey Plat Required:

Order No. 139-8 9/20/72 O.K. Rule C-3

Rule C-3(c), Topographic Exception/company owns or controls acreage within a 660' radius of proposed site

#3

Lease Designation Fee Plotted on Map ✓

Approval Letter Written ✓

nl

PI

April 28, 1980

Shell Oil Company
P.O. Box 831
Houston, Texas 77001

Well No. Altamont #1-15A3
Sec. 15, T. 1S, R. 3W
Duchesne County, Utah

Insofar as this office is concerned, approval to drill the above referred to oil well is hereby granted in accordance with the Order issued in Cause NO. 139-8 dated September 20, 1972.

Should you determine that it will be necessary to plug and abandon this well, you are hereby requested to immediately notify the following:

MICHAEL T. MINDER - Petroleum Engineer
Office: 533-5771
Home: 876-3001

Enclosed please find Form OGC-8-X, which is to be completed whether or not water sands (acquifers) are encountered during drilling. Your cooperation in completing this form will be appreciated.

Further, it is requested that this Division be notified within 24 hours after drilling operations commence, and that the drilling contractor and rig number be identified.

The API number assigned to this well is 43-013-30529.

Sincerely,

DIVISION OF OIL, GAS AND MINING

Michael T. Minder
Petroleum Engineer

/btm

cc

Form OGC-1b

STATE OF UTAH
DEPARTMENT OF NATURAL RESOURCES
DIVISION OF OIL, GAS, AND MINING

SUBMIT IN TRIPLICATE*
(Other instructions on reverse side)

SUNDRY NOTICES AND REPORTS ON WELLS

(Do not use this form for proposals to drill or to deepen or plug back to a different reservoir. Use "APPLICATION FOR PERMIT—" for such proposals.)

1. OIL WELL [X] GAS WELL [ ] OTHER

2. NAME OF OPERATOR: Shell Oil Company

3. ADDRESS OF OPERATOR: P. O. Box 831, Houston, TX 77001

4. LOCATION OF WELL (Report location clearly and in accordance with any State requirements.* See also space 17 below.) At surface: 1053 FNL, 1215 FEL

5. LEASE DESIGNATION AND SERIAL NO.: Shell Lease 301881, 30188

6. IF INDIAN, ALLOTTEE OR TRIBE NAME:

7. UNIT AGREEMENT NAME: Altamont

8. FARM OR LEASE NAME:

9. WELL NO.: 1-15A3

10. FIELD AND POOL, OR WILDCAT: Altamont

11. SEC., T., R., M., OR BLK. AND SURVEY OR AREA: Sec 15, T1S, R3W

12. COUNTY OR PARISH:

13. STATE:

14. PERMIT NO.:

15. ELEVATIONS (Show whether DF, RT, GR, etc.):

16. **Check Appropriate Box To Indicate Nature of Notice, Report, or Other Data**

NOTICE OF INTENTION TO:				SUBSEQUENT REPORT OF:			
TEST WATER SHUT-OFF	[ ]	PULL OR ALTER CASING	[ ]	WATER SHUT-OFF	[ ]	REPAIRING WELL	[ ]
FRACTURE TREAT	[ ]	MULTIPLE COMPLETE	[ ]	FRACTURE TREATMENT	[ ]	ALTERING CASING	[ ]
SHOOT OR ACIDIZE	[ ]	ABANDON*	[ ]	SHOOTING OR ACIDIZING	[ ]	ABANDONMENT*	[ ]
REPAIR WELL	[ ]	CHANGE PLANS	[ ]	(Other) Well Status Report			[X]
(Other)			[ ]	(NOTE: Report results of multiple completion on Well Completion or Recompletion Report and Log form.)			

17. DESCRIBE PROPOSED OR COMPLETED OPERATIONS (Clearly state all pertinent details, and give pertinent dates, including estimated date of starting any proposed work. If well is directionally drilled, give subsurface locations and measured and true vertical depths for all markers and zones pertinent to this work.)*

Presently drilling at 12,496'

RECEIVED AUG 8 1980

18. I hereby certify that the foregoing is true and correct

SIGNED D. M. Joba TITLE Supervisor-Regulatory-Permits DATE 8-5-80

(This space for Federal or State office use)

APPROVED BY _____ TITLE _____ DATE _____

CONDITIONS OF APPROVAL, IF ANY:

*See Instructions on Reverse Side

Form OGC-1b

STATE OF UTAH
DEPARTMENT OF NATURAL RESOURCES
DIVISION OF OIL, GAS, AND MINING

SUBMIT IN TRIPLICATE*
(Other instructions on reverse side)

SUNDRY NOTICES AND REPORTS ON WELLS

(Do not use this form for proposals to drill or to deepen or plug back to a different reservoir. Use "APPLICATION FOR PERMIT—" for such proposals.)

1. OIL WELL [X] GAS WELL [ ] OTHER

2. NAME OF OPERATOR: Shell Oil Company

3. ADDRESS OF OPERATOR: P. O. Box 831, Houston, TX 77001

4. LOCATION OF WELL (Report location clearly and in accordance with any State requirements.* See also space 17 below.) At surface: 1053' FNL, 1215' FEL

5. LEASE DESIGNATION AND SERIAL NO.: Shell Lease 301881, 30188

6. IF INDIAN, ALLOTTEE OR TRIBE NAME:

7. UNIT AGREEMENT NAME: Altamont

8. FARM OR LEASE NAME:

9. WELL NO.: 1-15A3

10. FIELD AND POOL, OR WILDCAT: Altamont

11. SEC., T., R., M., OR BLK. AND SURVEY OR AREA: Sec 15, T1S, R3W

12. COUNTY OR PARISH:

13. STATE:

14. PERMIT NO.:

15. ELEVATIONS (Show whether DF, RT, GR, etc.):

16. **Check Appropriate Box To Indicate Nature of Notice, Report, or Other Data**

NOTICE OF INTENTION TO:				SUBSEQUENT REPORT OF:			
TEST WATER SHUT-OFF	[ ]	PULL OR ALTER CASING	[ ]	WATER SHUT-OFF	[ ]	REPAIRING WELL	[ ]
FRACTURE TREAT	[ ]	MULTIPLE COMPLETE	[ ]	FRACTURE TREATMENT	[ ]	ALTERING CASING	[ ]
SHOOT OR ACIDIZE	[ ]	ABANDON*	[ ]	SHOOTING OR ACIDIZING	[ ]	ABANDONMENT*	[ ]
REPAIR WELL	[ ]	CHANGE PLANS	[ ]	(Other) Well Status Report			[X]
(Other)			[ ]	(NOTE: Report results of multiple completion on Well Completion or Recompletion Report and Log form.)			

17. DESCRIBE PROPOSED OR COMPLETED OPERATIONS (Clearly state all pertinent details, and give pertinent dates, including estimated date of starting any proposed work. If well is directionally drilled, give subsurface locations and measured and true vertical depths for all markers and zones pertinent to this work.)*

Drilling at 14,417'.

RECEIVED SEP 4 1980

18. I hereby certify that the foregoing is true and correct

SIGNED D. M. Jobe TITLE Supervisor-Regulatory Permits DATE 9-2-80

(This space for Federal or State office use)

APPROVED BY _____ TITLE _____ DATE _____

CONDITIONS OF APPROVAL, IF ANY:

*See Instructions on Reverse Side

Form OGC-1b

SUBMIT IN TRIPLICATE*
(Other instructions on reverse side)

STATE OF UTAH
DEPARTMENT OF NATURAL RESOURCES
DIVISION OF OIL, GAS, AND MINING

SUNDRY NOTICES AND REPORTS ON WELLS

(Do not use this form for proposals to drill or to deepen or plug back to a different reservoir. Use "APPLICATION FOR PERMIT—" for such proposals.)

5. LEASE DESIGNATION AND SERIAL NO.: Shell Lease 301881, 30188

6. IF INDIAN, ALLOTTEE OR TRIBE NAME:

1. OIL WELL [X] GAS WELL [ ] OTHER

7. UNIT AGREEMENT NAME: Altamont

2. NAME OF OPERATOR: Shell Oil Company

8. FARM OR LEASE NAME:

3. ADDRESS OF OPERATOR: P. O. Box 831, Houston, TX 77001

9. WELL NO.: 1-15A3

4. LOCATION OF WELL (Report location clearly and in accordance with any State requirements.* See also space 17 below.) At surface: 1053' FNL, 1215' FEL

10. FIELD AND POOL, OR WILDCAT:

11. SEC., T., R., M., OR BLK. AND SURVEY OR AREA: Sec 15, T1S, R3W

14. PERMIT NO.:

15. ELEVATIONS (Show whether DF, RT, GR, etc.):

12. COUNTY OR PARISH:

13. STATE:

16. **Check Appropriate Box To Indicate Nature of Notice, Report, or Other Data**

NOTICE OF INTENTION TO:				SUBSEQUENT REPORT OF:			
TEST WATER SHUT-OFF	[ ]	PULL OR ALTER CASING	[ ]	WATER SHUT-OFF	[ ]	REPAIRING WELL	[ ]
FRACTURE TREAT	[ ]	MULTIPLE COMPLETE	[ ]	FRACTURE TREATMENT	[ ]	ALTERING CASING	[ ]
SHOOT OR ACIDIZE	[ ]	ABANDON*	[ ]	SHOOTING OR ACIDIZING	[ ]	ABANDONMENT*	[ ]
REPAIR WELL	[ ]	CHANGE PLANS	[ ]	(Other) Well Status Report			[X]
(Other)			[ ]	(NOTE: Report results of multiple completion on Well Completion or Recompletion Report and Log form.)			

17. DESCRIBE PROPOSED OR COMPLETED OPERATIONS (Clearly state all pertinent details, and give pertinent dates, including estimated date of starting any proposed work. If well is directionally drilled, give subsurface locations and measured and true vertical depths for all markers and zones pertinent to this work.)*

Drilled to TD 15,792'. Released rig 9-22-80. W. O. Completion rig.

RECEIVED
SEP 3 1980
DIVISION OF
OIL, GAS & MINING

18. I hereby certify that the foregoing is true and correct

SIGNED D. M. Jobe TITLE Supervisor-Regulatory Permits DATE 10-1-80

(This space for Federal or State office use)

APPROVED BY _____ TITLE _____ DATE _____

CONDITIONS OF APPROVAL, IF ANY:

*See Instructions on Reverse Side

Form OGC-1b

SUBMIT IN TRIPLICATE*
(Other instructions on reverse side)

STATE OF UTAH
DEPARTMENT OF NATURAL RESOURCES
DIVISION OF OIL, GAS, AND MINING

SUNDRY NOTICES AND REPORTS ON WELLS

(Do not use this form for proposals to drill or to deepen or plug back to a different reservoir. Use "APPLICATION FOR PERMIT—" for such proposals.)

1. OIL WELL [X] GAS WELL [ ] OTHER

2. NAME OF OPERATOR: Shell Oil Company

3. ADDRESS OF OPERATOR: P. O. Box 831, Houston, TX 77001

4. LOCATION OF WELL (Report location clearly and in accordance with any State requirements.* See also space 17 below.) At surface: 1053' FNL, 1215' FEL

5. LEASE DESIGNATION AND SERIAL NO.: Shell Lease 301881, 30188

6. IF INDIAN, ALLOTTEE OR TRIBE NAME:

7. UNIT AGREEMENT NAME: Altamont

8. FARM OR LEASE NAME:

9. WELL NO.: 1-15A3

10. FIELD AND POOL, OR WILDCAT: Altamont

11. SEC., T., R., M., OR BLK. AND SURVEY OR AREA: Sec 15, T1S, R3W

12. COUNTY OR PARISH:

13. STATE:

14. PERMIT NO.:

15. ELEVATIONS (Show whether DF, RT, GR, etc.):

16. **Check Appropriate Box To Indicate Nature of Notice, Report, or Other Data**

NOTICE OF INTENTION TO:				SUBSEQUENT REPORT OF:			
TEST WATER SHUT-OFF	[ ]	PULL OR ALTER CASING	[ ]	WATER SHUT-OFF	[ ]	REPAIRING WELL	[ ]
FRACTURE TREAT	[ ]	MULTIPLE COMPLETE	[ ]	FRACTURE TREATMENT	[ ]	ALTERING CASING	[ ]
SHOOT OR ACIDIZE	[ ]	ABANDON*	[ ]	SHOOTING OR ACIDIZING	[ ]	ABANDONMENT*	[ ]
REPAIR WELL	[ ]	CHANGE PLANS	[ ]	(Other) Well Status Report			[X]
(Other)			[ ]	(NOTE: Report results of multiple completion on Well Completion or Recompletion Report and Log form.)			

17. DESCRIBE PROPOSED OR COMPLETED OPERATIONS (Clearly state all pertinent details, and give pertinent dates, including estimated date of starting any proposed work. If well is directionally drilled, give subsurface locations and measured and true vertical depths for all markers and zones pertinent to this work.)*

Waiting on Completion.

NOV 0 1980
DIVISION OF
OIL, GAS & MINING

18. I hereby certify that the foregoing is true and correct

SIGNED D. M. Jobe TITLE Supvr.. Regulatory-Permits DATE 11-4-80

(This space for Federal or State office use)

APPROVED BY _____ TITLE _____ DATE _____

CONDITIONS OF APPROVAL, IF ANY:

*See Instructions on Reverse Side

UTAH

ALTAMONT
Shell-Tenneco 1-15A3 Status: Moving to new location.
(D) Brinkerhoff #69
15,800' Flagstaff/Wasatch Test JUN 4 1980
$ /$1320M
WI - 56.25%
GL 6420'

UTAH

ALTAMONT
Shell-Tenneco 1-15A3 Status: Moving to new location.
(D) Brinkerhoff #69
15,800' Flagstaff/Wasatch Test
$ M/$1320M JUN 5 1980
WI - 56.25%
EL 6420'

UTAH

ALTAMONT
Shell-Tenneco 1-15A3 Status: 100% moved; rigging up.
(D) Brinkerhoff #69
15,800' Flagstaff/Wasatch Test
$ M/$1320M JUN 6 1980
WI - 56.25%
EL 6420'
20" csg @ 45'

UTAH

ALTAMONT
Shell-Tenneco 1-15A3 6-7-80 - Status: Rigging up.
(D) Brinkerhoff #69
15,800' Flagstaff/Wasatch Test 6-8-80 - Status: Rigging up.
$ M/$1320M
WI - 56.25% 6-9-80 - Status: Rigging up.
EL 6420'
20" csg @ 45'

UTAH

ALTAMONT
Shell-Tenneco 1-15A3 Status: Rigging up.
(D) Brinkerhoff #69
15,800' Flagstaff/Wasatch Test
$ M/$1320M JUN 10 1980
WI - 56.25%
EL 6420'
20" csg @ 45'

UTAH

ALTAMONT
Shell-Tenneco 1-15A3 Status: Rigging up.
(D) Brinkerhoff #69
15,800' Flagstaff/Wasatch Test
$ M/$1320M JUN 11 1980
WI - 56.25%
EL 6420'
20" csg @ 45'

UTAH

ALTAMONT
Shell-Tenneco 1-15A3
(D) Brinkerhoff #69
15,800' Flagstaff/Wasatch Test
$ 124M/$1320M
WI - 56.25%
EL 6420'
20" csg @ 45'
13-3/8" csg @ 285'

285/220//1. Status: Mix & cmt 13-3/8" csg.
Ran 7 jts 13-3/8" csg to 285'. Cmt w/400 sx Class "H" cmt w/3% CaCl. Good returns.
Spudded at 10 AM, 6-11-80.
Location: 1594' FEL, 925' FNL
Section 15, T1S, R3W
Duchesne County, Utah

JUN 12 1980

UTAH

ALTAMONT
Shell-Tenneco 1-15A3
(D) Brinkerhoff #69
15,800' Flagstaff/Wasatch
$ 169M/$1320M
WI - 56.25%
EL 6420'
20" csg @ 45'
13-3/8" csg @ 285'

450/165//2. Status: Drilling.
Mud: (water)

JUN 13 1980

UTAH

ALTAMONT
Shell-Tenneco 1-15A3
(D) Brinkerhoff #69
15,800' Flagstaff/Wasatch
$203 M/$1320M
WI - 56.25%
EL 6420'
20" csg @ 45'
13-3/8" csg @ 285'

6-14-80
1470/1020//3. Status: Drilling.
Mud: (water)

6-15-80
2450/980//4. Status: Drilling.
Mud: 8.4

6-16-80
3100/650//5. Status: Drilling.
Mud: 8.3

UTAH

ALTAMONT
Shell-Tenneco 1-15A3
(D) Brinkerhoff #69
15,800' Flagstaff/Wasatch
$213 M/$1320M
WI - 56.25%
EL 6420'
20" csg @ 45'
13-3/8" csg @ 285'

3650/550//6/80. Status: Drilling.
Mud: 8.3

JUN 17 1980

UTAH

ALTAMONT
Shell-Tenneco 1-15A3
(D) Brinkerhoff #69
15,800' Flagstaff/Wasatch
$ 193M/$1320M
WI - 56.25%
EL 6420'
20" csg @ 45'
13-3/8" csg @ 285'

3985/335//7/80. Status: Drilling.
Mud: 8.3

JUN 18 1980

UTAH

ALTAMONT
Shell-Tenneco 1-15A3
(D) Brinkerhoff #69
15,800' Flagstaff/Wasatch
$ 218M/$1320M
WI - 56.25%
EL 6420'
20" csg @ 45'
13-3/8" csg @ 285'

4154/169//8/80. Status: Drilling.
Mud: (water)

JUN 19 1980

UTAH

ALTAMONT
Shell-Tenneco 1-15A3
(D) Brinkerhoff #69
15,800' Flagstaff/Wasatch
$ 226M/$1320M
WI - 56.25%
EL 6420'
20" csg @ 45'
13-3/8" csg @ 285'

4555/401//9/80. Status: Drilling.
Mud: (water)

JUN 20 1980

JTAH

ALTAMONT
Shell-Tenneco 1-15A3
(D) Brinkerhoff #69
15,800' Flagstaff/Wasatch
$ 253M/$1320M
WI - 56.25%
EL 6420'
20" csg @ 45'
13-3/8" csg @ 285'

6-21-80
4872/317//10/80. Status: Drilling.
Mud: (water)

6-22-80
5208/336//11/80. Status: Drilling.
Mud: (water)

6-23-80
5525/317//12/80. Status: Drilling.
Mud: (water)

UTAH

ALTAMONT
Shell-Tenneco 1-15A3
(D) Brinkerhoff #69
15,800' Flagstaff/Wasatch
$ 261M/$1320M
WI - 56.25%
EL 6420'
20" csg @ 45'
13-3/8" csg @ 285'

5735/210//13/80. Status: Drilling.
Mud: (water)

JUN 24 1980

UTAH

ALTAMONT
Shell-Tenneco 1-15A3
(D) Brinkerhoff #69
15,800' Flagstaff/Wasatch
$ 289M/$1320M
WI - 56.25%
EL 6420'
20" csg @ 45'
13-3/8" csg @ 285'

6086/351//14/80. Status: Drilling.
Mud: (water)

JUN 25 1980

UTAH

ALTAMONT
Shell-Tenneco 1-15A3
(D) Brinkerhoff #69
15,800' Flagstaff/Wasatch
$ 304M/$1320M
WI - 56.25%
EL 6420'
20" csg @ 45'
13-3/8" csg @ 285'

6387/301//15/80. Status: Drilling.
Mud: (water)

JUN 26 1980

UTAH

ALTAMONT
Shell-Tenneco 1-15A3
(D) Brinkerhoff #69
15,800' Flagstaff/Wasatch
$304 M/$1320M
WI - 56.25%
EL 6420'
20" csg @ 45'
13-3/8" csg @ 285'

6665/278//16/80. Status: Drilling.
Mud: (Water)

JUN 27 1980

UTAH

ALTAMONT
Shell-Tenneco 1-15A3
(D) Brinkerhoff #69
15,800' Flagstaff/Wasatch
$238 M/$1320M
WI - 56.25%
EL 6420'
20" csg @ 45'
13-3/8" csg @ 285'

6-28-30
6885/220//17/80. Status: Drilling
Mud: Water

6-29-80
7225/340//18/80. Status: Drilling
Mud: Water

6-30-80
7510/285//19/80. Status: Drilling
Mud: Water

UTAH

ALTAMONT
Shell-Tenneco 1-15A3
(D) Brinkerhoff #69
15,800' Flagstaff/Wasatch
$ M/$1320M
WI - 56.25%
EL 6420'
20" csg @ 45'
13-3/8" csg @ 285'

7/1/80
Status: Trip For Logs
7705/195/20/80
Mud: Water

UTAH

ALTAMONT
Shell-Tenneco 1-15A3
(D) Brinkerhoff #69
15,800' Flagstaff/Wasatch
$356M/$1320M
WI - 56.25%
EL 6420'
20" csg @ 45'
13-3/8" csg @ 285'

TD 7705/195//20/80. Status: Trip For Logs.
Mud: Water

JUL 2 1980

UTAH

ALTAMONT

Shell-Tenneco 1-15A3
(D) Brinkerhoff #69
15,800' Flagstaff/Wasatch
$530M/$1320M
WI - 56.25%
EL 6420'
20" csg @ 45'
13-3/8" csg @ 285'

TD 7705/0//22/80. Status: Press Stack field line.

JUL 3 1980

UTAH

ALTAMONT

Shell-Tenneco 1-15A3
(D) Brinkerhoff #69
15,800' Flagstaff/Wasatch
$611 M/$1320M
WI - 56.25%
EL 6420'
20" csg @ 45'
13-3/8" csg @ 285'

7-4-80

TD 7705/0//23/80. Status: Picking UP GR. 8 OP.

7-5-80

TD 8015/310//24/80. Status: Drilling.

7-6-80

TD 8320/305 Status: Drilling.

7-7-80

TD 8590/270//26/80. Status: G.E.H.

ALTAMONT

Shell-Tenneco 1-15A3
(D) Brinkerhoff #69
15,800' Flagstaff/Wasatch
$620 M/$1320M
WI - 56.25%
EL 6420'
20" csg @ 45'
13-3/8" csg @ 285'

TD 8925/335//27/80. Status: Drilling.
Mud: water.

JUL 8 1980

ALTAMONT

Shell-Tenneco 1-15A3
(D) Brinkerhoff #69
15,800' Flagstaff/Wasatch
$629 M/$1320M
WI - 56.25%
EL 6420'
20" csg @ 45'
13-3/8" csg @ 285'

TD 9355/430//28/80. Status: Drilling.
Mud: water.

7-9-80

7-10-80
9695/340//29.80. Status: Drilling.
Mud: (water)

7-11-80
10,040/345//30/80. Status: Drilling.
Mud: (water)

UTAH

ALTAMONT
Shell-Tenneco 1-15A3
(D) Brinkerhoff #69
15,800' Flagstaff/Wasatch
$ 667M/$1320M
WI - 56.25%
EL 6420'
20" csg @ 45'
13-3/8" csg @ 285'
9-5/8" csg @ 7705'

7-12-80
10,240/200//31/80. Status: Drilling.
Mud: (water)

7-13-80
10,690/450//32/80. Status: Drilling.
Mud: (water)

7-14-80
11,125/435//33/80. Status: Drilling.
Mud: (.473) 9.1 x 35 x 18.6

UTAH

ALTAMONT
Shell-Tenneco-Lopez 1-15A3
(D) Brinkerhoff #69
15,800' Flagstaff/Wasatch
$ 700M/$1320M
WI - 56.25%
EL 6420'
20" csg @ 45'
13-3/8" csg @ 285'
9-5/8" csg @ 7705'

11,175/50//34/80. Status: Drilling.
Lost approx. 80 bbls mud on mud up.
Mud: (.483) 9.3 x 35 x 16.8

JUL 15 1980

UTAH

ALTAMONT
Shell-Tenneco-Lopez 1-15A3
(D) Brinkerhoff #69
15,800' Flagstaff/Wasatch
$ 711M/$1320M
WI - 56.25%
EL 6420'
20" csg @ 45'
13-3/8" csg @ 285'
9-5/8" csg @ 7705'

11,335/160//35/80. Status: Drilling.
Stuck at 11,225 - worked free. Lost approx. 50 bbls at 11,285.
Mud: (.488) 9.4 x 35 x 15.2

JUL 16 1980

UTAH

ALTAMONT
Shell-Tenneco-Lopez 1-15A3
(D) Brinkerhoff #69
15,800' Flagstaff/Wasatch
$ 721M/$1320M
WI - 56.25%
EL 6420'
20" csg @ 45'
13-3/8" csg @ 285'
9-5/8" csg @ 7705'

11,462/127//36/80. Status: POOH - change out bit.
Mud: (.504) 9.7 x 37 x 12.8

JUL 17 1980

UTAH

ALTAMONT
Shell-Tenneco-Lopez 1-15A3
(D) Brinkerhoff #69
15,800' Flagstaff/Wasatch
$ 733 M/$1320M
WI - 56.25%
EL 6420'
20" csg @ 45'
13-3/8" csg @ 285'
9-5/8" csg @ 7705'

11,482/20//37/80. Status: GIH - breaking circ.
Mud: (.520) 10 x 36 x 11.6

JUL 18 1980

UTAH

ALTAMONT
Shell-Tenneco-Lopez 1-15A3
(D) Brinkerhoff #69
15,800' Flagstaff/Wasatch
$806M/$1320M
WI - 56.25%
EL 6420'
20" csg @ 45'
13-3/8" csg @ 285'
9-5/8" csg @ 7705'

7-19-80
11,595/113//38/80. Status: Drilling.
Lost approx. 800 bbls. mud last 24 hrs.
Regained full returns at 3:30 AM.
Mud: (.536) 10.3 x 37 x 12.2

7-20-80
11,695/100//39/80. Status: Drilling.
Mud: (.540) 10.4 x 37 x 9.2

7-21-80
11,769/74//40/80. Status: Circ. on choke.
Lost approx. 350 bbls. mud last 24 hrs.
Full returns at 12:00 AM.
Mud: (.551) 10.6 x 37 x 8.4

UTAH

ALTAMONT
Shell-Tenneco-Lopez 1-15A3
(D) Brinkerhoff #69
15,800' Flagstaff/Wasatch
$ 839M/$1320M
WI - 56.25%
EL 6420'
20" csg @ 45'
13-3/8" csg @ 285'
9-5/8" csg @ 7705'

11,793/24//41/80. Status: GIH slowly.
Lost approx 725 bbls. mud during last 24 hrs.
Mud: (.572) 11 x 39 x 11

JUL 22 1980

UTAH

ALTAMONT
Shell-Tenneco-Lopez 1-15A3
(D) Brinkerhoff #69
15,800' Flagstaff/Wasatch
$ 859M/$1320M
WI - 56.25%
EL 6420'
20" csg @ 45'
13-3/8" csg @ 285'
9-5/8" csg @ 7705'

11,806/22//42/80. Status: Drilling.
Circ & cond mud. Lost approx 700 bbls mud
past 24 hrs. Drilling w/full returns.
Mud: (.561) 10.8 x 38 x 10.8

JUL 23 1980

UTAH

ALTAMONT
Shell-Tenneco-Lopez 1-15A3
(D) Brinkerhoff #69
15,800' Flagstaff/Wasatch
$ 886M/$1320M
WI - 56.25%
EL 6420'
20" csg @ 45'
13-3/8" csg @ 285'
9-5/8" csg @ 7705'

11,892/86//43/80. Status: Drilling.
Lost approx. 300 bbls mud.
Mud: (.566) 10.9 x 39 x 10.6

JUL 24 1980

UTAH

ALTAMONT
Shell-Tenneco-Lopez 1-15A3
(D) Brinkerhoff #69
15,800' Flagstaff/Wasatch
$902 M/$1320M
WI - 56.25%
EL 6420'
20" csg @ 45'
13-3/8" csg @ 285'
9-5/8" csg @ 7705'

11,972/80//44/80. Status: Drilling.
Mud: (.561) 10.8 x 39 x 10.2

JUL 25 1980

UTAH

ALTAMONT
Shell-Tenneco-Lopez 1-15A3
(D) Brinkerhoff #69
15,800' Flagstaff/Wasatch
$ 933M/$1320M
WI - 56.25%
EL 6420'
20" csg @ 45'
13-3/8" csg @ 285'
9-5/8" csg @ 7705'

7-26-80
12,036/64//45/80. Status: Drilling.
Mud: (.561) 10.8 x 40 x 10

7-27-80
12,083/47//46/80. Status: Drilling.
Lost returns when pumping pill. Lost approx. 170 bbls. mud. Regained full returns at 10:30 PM.
Mud: (.566) 10.9 x 38 x 10.8

7-28-80
12,175/92//47/80. Status: Drilling.
Mud: (.561) 10.8 x 37 x 10.2

UTAH

ALTAMONT
Shell-Tenneco-Lopez 1-15A3
(D) Brinkerhoff #69
15,800' Flagstaff/Wasatch
$ 933M/$1320M
WI - 56.25%
EL 6420'
20" csg @ 45'
13-3/8" csg @ 285'
9-5/8" csg @ 7705'

12,254/79//48/80. Status: Drilling.
Lost approx. 60 bbls mud.
Mud: (.572) 11 x 38 x 9.8

JUL 29 1980

UTAH

ALTAMONT
Shell-Tenneco-Lopez 1-15A3
(D) Brinkerhoff #69
15,800' Flagstaff/Wasatch
$ 957M/$1320M
WI - 56.25%
EL 6420'
20" csg @ 45'
13-3/8" csg @ 285'
9-5/8" csg @ 7705'

12,319/65//49/80. Status: Drilling.
Lost approx 70 bbls mud.
Mud: (.572) 11 x 40 x 9.6

JUL 30 1980

UTAH

ALTAMONT

Shell-Tenneco-Lopez 1-15A3
(D) Brinkerhoff #69
15,800' Flagstaff/Wasatch
$ 967M/$1320M
WI - 56.25%
EL 6420'
20" csg @ 45'
13-3/8" csg @ 285'
9-5/8" csg @ 7705'

12,432/113//50/80. Status: Drilling.
Lost 30 bbls mud during last 24 hrs.
Mud: (.572) 11 x 38 x 9.2

JUL 31 1980

UTAH

ALTAMONT

Shell-Tenneco-Lopez 1-15A3
(D) Brinkerhoff #69
15,800' Flagstaff/Wasatch
$ 998M/$1320M
WI - 56.25%
EL 6420'
20" csg @ 45'
13-3/8" csg @ 285'
9-5/8" csg @ 7705'

12,496/64//51/80. Status: Prep. to trip & log.
Lost 140 bbls mud during last 24 hrs.
Mud: (.572) 11 x 38 x 8.8

AUG 1 1980

UTAH

ALTAMONT

Shell-Tenneco-Lopez 1-15A3
(D) Brinkerhoff #69
15,800' Flagstaff/Wasatch
$1263M/$1320M
WI - 56.25%
EL 6420'
20" csg @ 45'
13-3/8" csg @ 285'
9-5/8" csg @ 7705'
7" csg @ 12,488'

8-2-80
12,496/0//52/80. Status: Logging.
Mud: (.572) 11 x 38 x 8.2

8-3-80
12,496/0//53/80. Status: Laying down DP.
Mud: (.572) 11 x 44 x 8.6

8-4-80
12,496/0//54/80. Status: Cementing.
Ran 7" csg. to 12,488'.
Mud: (.572) 11 x 44 x 8.6

UTAH

ALTAMONT

Shell-Tenneco-Lopez 1-15A3
(D) Brinkerhoff #69
15,800' Flagstaff/Wasatch
$1300M/$1320M
WI - 56.25%
EL 6420'
20" csg @ 45'
13-3/8" csg @ 285'
9-5/8" csg @ 7705'
7" csg @ 12,488'

12,496/0//55/80. Status: Testing BOPE.
Ran 291 jts 7" 29# csg to 12,488'. Cmt w/ 875 sx 50:50 Poz, 2% gel, 0.5% Halad 9, 1/4#/sx Flocele, 1% CFR-2. Tail w/200 sx Class "H", .3% HR-5. Lost 540 bbls mud prior to cementing. 75% return regained just before cementing.
Mud: (.572) 11.4 x 40 x 8

AUG 5 1980

UTAH

ALTAMONT
Shell-Tenneco-Lopez 1-15A3
(D) Brinkerhoff #69
15,800' Flagstaff/Wasatch
$1312M/$1320M
WI - 56.25%
EL 6420'
20" csg @ 45'
13-3/8" csg @ 285'
9-5/8" csg @ 7705'
7" csg @ 12,488'

TD 12,496 (Cmt PBTD) 12,465)/40 cmt//56/80.
Status: Drilling cmt

AUG 6 1980

UTAH

ALTAMONT
Shell-Tenneco-Lopez 1-15A3
(D) Brinkerhoff #69
15,800' Flagstaff/Wasatch
$1345M/$1320M
WI - 56.25%
EL 6420'
20" csg @ 45'
13-3/8" csg @ 285'
9-5/8" csg @ 7705'
7" csg @ 12,488'

12,565/100//57/80. Status: Drilling
Mud: (.572) 11.0 x 46 x 12.6

AUG 7 1980

UTAH

ALTAMONT
Shell-Tenneco-Lopez 1-15A3
(D) Brinkerhoff #69
15,800' Flagstaff/Wasatch
$1359M/$1320M
WI - 56.25%
EL 6420'
20" csg @ 45'
13-3/8" csg @ 285'
9-5/8" csg @ 7705'
7" csg @ 12,488'

12,665/100//58/80. Status: Drilling
Mud: (.572) 11.0 x 41 x 11.8

AUG 8 1980

UTAH

ALTAMONT
Shell-Tenneco-Lopez 1-15A3
(D) Brinkerhoff #69
15,800' Flagstaff/Wasatch
$1392M/$1320M
WI - 56.25%
EL 6420'
20" csg @ 45'
13-3/8" csg @ 285'
9-5/8" csg @ 7705'
7" csg @ 12,488'

8-9-80
12651/87/759/80. Status: Working on both pumps.
Mud: (.572) 11.0 x 41 x 11.9

AUG 11 1980

8-10-80
12860/108//60/80. Status: Drilling.
Mud: (.572) 11.0 x 38 x 9.6

8-11-80
12985/125//61/80. Status: Drilling.
Mud: (.572) 11.0 x 38 x 8.2

UTAH

ALTAMONT
Shell-Tenneco-Lopez 1-15A3
(D) Brinkerhoff #69
15,800' Flagstaff/Wasatch
$1457M/$1320M
WI - 56.25%
EL 6420'
20" csg @ 45'
13-3/8" csg @ 285'
9-5/8" csg @ 7705'
7" csg @ 12,488'

13,366/51//65/80. Status: Drilling.
Mud: (.608) 11.7 x 40 x 7.0

AUG 15 1980

UTAH

ALTAMONT

Shell-Tenneco-Lopez 1-15A3
(D) Brinkerhoff #69
15,800' Flagstaff/Wasatch
$1402M/$1320M
WI - 56.25%
EL 6420'
20" csg @ 45'
13-3/8" csg @ 285'
9-5/8" csg @ 7705'
7" csg @ 12,488'

13,077/92//62/80. Status: Drilling.
Mud: (.588) 11.3 x 40 x 8.4

AUG 1 2 1980

UTAH

ALTAMONT

Shell-Tenneco-Lopez 1-15A3
(D) Brinkerhoff #69
15,800' Flagstaff/Wasatch
$1412M/$1320M
WI - 56.25%
EL 6420'
20" csg @ 45'
13-3/8" csg @ 285'
9-5/8" csg @ 7705'
7" csg @ 12,488'

13,195/118//63/80. Status: Drilling.
Mud: (.592) 11.4 x 40 x 7.8

AUG 1 3 1980

UTAH

ALTAMONT

Shell-Tenneco-Lopez 1-15A3
(D) Brinkerhoff #69
15,800' Flagstaff/Wasatch
$1426M/$1320M
WI - 56.25%
EL 6420'
20" csg @ 45'
13-3/8" csg @ 285'
9-5/8" csg @ 7705'
7" csg @ 12,488'

13,305/110//64/80. Status: Drilling.
Mud: (.598) 11.5 x 40 x 7.2

AUG 1 4 1980

UTAH

ALTAMONT

Shell-Tenneco-Lopez 1-15A3
(D) Brinkerhoff #69
15,800' Flagstaff/Wasatch
$1488M/$1320M
WI - 56.25%
EL 6420'
20" csg @ 45'
13-3/8" csg @ 285'
9-5/8" csg @ 7705'
7" csg @ 12,488'

8-16-80
13,485/119//66/80. Status: Drilling.
Mud: (.613) 11.8 x 40 x 6.8

8-17-80
13,602/117//67/80. Status: Drilling.
Mud: (.629) 12.1 x 41 x 6.6

8-18-80
13,723/121//68/80. Status: Drilling.
Mud: (.651) 12.5 x 40 x 6

AUG 1 8 1980

UTAH

ALTAMONT

Shell-Tenneco-Lopez 1-15A3
(D) Brinkerhoff #69
15,800' Flagstaff/Wasatch
$1521M/$1320M
WI - 56.25%
EL 6420'
20" csg @ 45'
13-3/8" csg @ 285'
9-5/8" csg @ 7705'
7" csg @ 12,488'

13,814/91//69/80. Status: Drilling.
Mud: (.785) 15.1 x 53 x 5.2

AUG 19 1980

UTAH

ALTAMONT

Shell-Tenneco-Lopez 1-15A3
(D) Brinkerhoff #69
15,800' Flagstaff/Wasatch
$1540M/$1320M
WI - 56.25%
EL 6420'
20" csg @ 45'
13-3/8" csg @ 285'
9-5/8" csg @ 7705'
7" csg @ 12,488'

13,897/83//70/80. Status: Drilling.
Mud: (.785) 15.1 x 51 x 4.8

AUG 20 1980

UTAH

ALTAMONT

Shell-Tenneco-Lopez 1-15A3
(D) Brinkerhoff #69
15,800' Flagstaff/Wasatch
$1553M/$1320M
WI - 56.25%
EL 6420'
20" csg @ 45'
13-3/8" csg @ 285'
9-5/8" csg @ 7705'
7" csg @ 12,488'

13,985/88//71/80. Status: Drilling.
Lost approximately 400 bbls mud last 24 hrs.
Regained full returns.
Mud: (.774) 14.9 x 50 x 4.6

AUG 21 1980

UTAH

ALTAMONT

Shell-Tenneco-Lopez 1-15A3
(D) Brinkerhoff #69
15,800' Flagstaff/Wasatch
$1567M/$1320M
WI - 56.25%
EL 6420'
20" csg @ 45'
13-3/8" csg @ 285'
9-5/8" csg @ 7705'
7" csg @ 12,488'

14,049/65//72/80. Status: Repair rotary clutch.
Mud: (.769) 14.8 x 46 x 4.8

AUG 22 1980

UTAH

ALTAMONT
Shell-Tenneco-Lopez 1-15A3
(D) Brinkerhoff #69
15,800' Flagstaff/Wasatch
$1605M/$1320M
WI - 56.25%
EL 6420'
20" csg @ 45'
13-3/8" csg @ 285'
9-5/8" csg @ 7705'
7" csg @ 12,488'

8-23-80
14,125/76//73/80. Status: Drilling.
Mud: (.774) 14.9 x 47 x 4.6

8-24-80
14,214/89//74/80. Status: Drilling.
Mud: (.774) 14.9 x 44 x 5.1

8-25-80
14,227/13//75/80. Status: GIH.
Top of fish @ 10,996'. Picked up skirted mill and 6 - 4-3/4" DCs and GIH.
Mud: (.774) 14.9 x 47 x 4.9

AUG 25 1980

UTAH

ALTAMONT
Shell-Tenneco-Lopez 1-15A3
(D) Brinkerhoff #69
15,800' Flagstaff/Wasatch
$1617M/$1320M
WI - 56.25%
EL 6420'
20" csg @ 45'
13-3/8" csg @ 285'
9-5/8" csg @ 7705'
7" csg @ 12,488'

14,227/0//76/80. Status: POOH.
Engaged fish and worked free. POOH w/fish and lay down same.
Mud: (.775) 14.9 x 45 x 4.8

AUG 26 1980

UTAH

ALTAMONT
Shell-Tenneco-Lopez 1-15A3
(D) Brinkerhoff #69
15,800' Flagstaff/Wasatch
$1632M/$1320M
WI - 56.25%
EL 6420'
20" csg @ 45'
13-3/8" csg @ 285'
9-5/8" csg @ 7705'
7" csg @ 12,488'

14,227/0//77/80. Status: GIH.
Rig up Dia-log, ran Casing Profile to 8987'.
Mud: (.775) 14.1 x 45 x 4.9

AUG 27 1980

UTAH

ALTAMONT
Shell-Tenneco-Lopez 1-15A3
(D) Brinkerhoff #69
15,800' Flagstaff/Wasatch
$1646M/$1320M
WI - 56.25%
EL 6420'
20" csg @ 45'
13-3/8" csg @ 285'
9-5/8" csg @ 7705'
7" csg @ 12,488'

14,227/0//78/80. Status: Cleaning out to btm.
Hit bridge at 13,980', stuck string. Worked stuck string w/Dailey jars would not work. Jarred on fish and came free.
Mud: (.775) 14.9 x 46 x 4.6

AUG 28 1980

UTAH

ALTAMONT
Shell-Tenneco-Lopez 1-15A3
(D) Brinkerhoff #69
15,800' Flagstaff/Wasatch
$1676M/$1320M
WI - 56.25%
EL 6420'
20" csg @ 45'
13-3/8" csg @ 285'
9-5/8" csg @ 7705'
7" csg @ 12,488'

14,227/0//79/80. Status: GIH.
Tried to fish DP rubbers out of BOP.
Mud: (.775) 14.9 x 47 x 4.8

AUG 29 1980

UTAH

ALTAMONT
Shell-Tenneco-Lopez 1-15A3
(D) Brinkerhoff #69
15,800' Flagstaff/Wasatch
$1726M/$1320M
WI - 56.25%
EL 6420'
20" csg @ 45'
13-3/8" csg @ 285'
9-5/8" csg @ 7705'
7" csg @ 12,488'

8-31-80
14,417/101//81/80. Status: Drilling.
Mud: (.775) 14.9 x 4.6 x 4.6.

9-1-80
14,479/62//82/80. Status: POOH.
Mud: (.775) 14.9 x 47 x 4.5

9-2-80
14,545/66/83/80. Status: Drilling.
Mud: (.775) 14.9 x 4.9 x 4.6

UTAH

ALTAMONT
Shell-Tenneco-Lopez 1-15A3
(D) Brinkerhoff #69
15,800' Flagstaff/Wasatch
$1728M/$1320M
WI - 56.25%
EL 6420'
20" csg @ 45'
13-3/8" csg @ 285'
9-5/8" csg @ 7705'
7" csg @ 12,488'

14,662/117//84/80. Status: Drilling.
Mud: (.769) 14.8 x 47 x 4.5

SEP 3 1980

UTAH

ALTAMONT
Shell-Tenneco-Lopez 1-15A3
(D) Brinkerhoff #69
15,800' Flagstaff/Wasatch
$1739M/$1320M
WI - 56.25%
EL 6420'
20" csg @ 45'
13-3/8" csg @ 285'
9-5/8" csg @ 7705'
7" csg @ 12,488'

14,770/108//85/80. Status: Drilling.
Mud: (.775) 15.x 48 x 4.4

SEP 4 1980

UTAH

ALTAMONT
Shell-Tenneco-Lopez 1-15A3
(D) Brinkerhoff #69
15,800' Flagstaff/Wasatch
$1753M/$1320M
WI - 56.25%
EL 6420'
20" csg @ 45'
13-3/8" csg @ 285'
9-5/8" csg @ 7705'
7" csg @ 12,488'

14,889/119//86/80. Status: Drilling.
Mud: (.778) 15 x 44 x 4.5

SEP 5 1980

UTAH

ALTAMONT
Shell-Tenneco-Lopez 1-15A3
(D) Brinkerhoff #69
15,800' Flagstaff/Wasatch
$1785M/$1320M
WI - 56.25%
EL 6420'
20" csg @ 45'
13-3/8" csg @ 285'
9-5/8" csg @ 7705'
7" csg @ 12,488'

9-6-80
15,010/121//87/80. Status: Drilling.
Mud: (.780) 15 x 46 x 4.2

9-7-80
15,105/95//88/80. Status: Drilling.
Mud: (.785) 15.1 x 46 x 4.5

9-8-80
15,235/130//89/80. Status: Drilling.
Mud: (.785) 15.1 x 45 x 4.3

UTAH

ALTAMONT
Shell-Tenneco-Lopez 1-15A3
(D) Brinkerhoff #69
15,800' Flagstaff/Wasatch
$1796M/$1320M
WI - 56.25%
EL 6420'
20" csg @ 45'
13-3/8" csg @ 285'
9-5/8" csg @ 7705'
7" csg @ 12,488'

15,365/130//90/80. Status: Drilling.
Mud: (.785) 15.1 x 43 x 4.2

SEP 9 1980

UTAH

ALTAMONT
Shell-Tenneco-Lopez 1-15A3
(D) Brinkerhoff #69
15,800' Flagstaff/Wasatch
$1814M/$1320M
WI - 56.25%
EL 6420'
20" csg @ 45'
13-3/8" csg @ 285'
9-5/8" csg @ 7705'
7" csg @ 12,488'

15,485/120//91/80. Status: Drilling.
Mud: (.785) 15.1 x 45 x 4.4

SEP 10 1980

UTAH

ALTAMONT

Shell-Tenneco-Lopez 1-15A3
(D) Brinkerhoff #69
15,800' Flagstaff/Wasatch
$1825M/$1320M
WI - 56.25%
EL 6420'
20" csg @ 45'
13-3/8" csg @ 285'
9-5/8" csg @ 7705'
7" csg @ 12,488'

15,608/123//92/80. Status: Drilling.
Mud: (.785) 15.1 x 45 x 4.3

SEP 11 1980

UTAH

ALTAMONT

Shell-Tenneco-Lopez 1-15A3
(D) Brinkerhoff #69
15,800' Flagstaff/Wasatch
$1844M/$1320M
WI - 56.25%
EL 6420'
20" csg @ 45'
13-3/8" csg @ 285'
9-5/8" csg @ 7705'
7" csg @ 12,488'

15,740/132//93/80. Status: Drilling.
Mud: (.790) 15.2 x 47 x 4.5

SEP 12 1980

UTAH

ALTAMONT

Shell-Tenneco-Lopez 1-15A3
(D) Brinkerhoff #69
15,800' Flagstaff/Wasatch
$1907M/$1320M
WI - 56.25%
EL 6420'
20" csg @ 45'
13-3/8" csg @ 285'
9-5/8" csg @ 7705'
7" csg @ 12,488'

9-13-80
15,792/52//94/80. Status: Csg Profile log.
Mud: (.790) 15 x 48 x 4.6

9-14-80
15,792/0//94/80. Status: Logging.
Lost tool in hole. Fish on bottom of hole.
Mud: (.780) 15.0 x 55 x 4.7

9-15-80
15,792/0//94/50. Status: Preparing to run liner.
Trip out w/fish, no damage to radioactive tool, full recovery.
Mud: (.790) 15.2 x 48 x 4.6

UTAH

ALTAMONT

Shell-Tenneco-Lopez 1-15A3
(D) Brinkerhoff #69
15,800' Flagstaff/Wasatch
$1966M/$1320M
WI - 56.25%
EL 6420'
20" csg @ 45'
13-3/8" csg @ 285'
9-5/8" csg @ 7705'
7" csg @ 12,488'
5" csg @ 15,790'

15,711/0//95/80. Status: W. O. Cement.
Ran 5" liner to 15,790'.
Mud: (.796) 15.3 x 50 x 4.7

SEP 16 1980

UTAH

ALTAMONT
Shell-Tenneco-Lopez 1-15A3
(D) Brinkerhoff #69
15,800' Flagstaff/Wasatch
$1997M/$1320M
WI - 56.25%
EL 6420'
20" csg @ 45'
13-3/8" csg @ 285'
9-5/8" csg @ 7705'
7" csg @ 12,488'
5" csg @ 15,790'

8-30-80
14,316/89//80/80. Status: Drilling.
Mud: (.775) 14.9 x 47 x 4.7

SEP 17 1980

9-17-80
15,711/0//96/80. Status: Testing Liner lap.
Ran 89 jts 5" liner to 15,790'. Cmt w/575 sx Class "H", 0.75% CFR-2, 35% Silica Flour, 0.57% HR-8. Bump plug at 11:30 PM 9/15/80. TIH to liner, no indication of cmt. Circ and give cmt more time.
Mud: (.796) 15.3 x 50 x 4.7

UTAH

ALTAMONT
Shell-Tenneco-Lopez 1-15A3
(D) Brinkerhoff #69
15,800' Flagstaff/Wasatch
$2007M/$1320M
WI - 56.25%
EL 6420'
20" csg @ 45'
13-3/8" csg @ 285'
9-5/8" csg @ 7705'
7" csg @ 12,488'
5" csg @ 15,790'

15,792/0//97/80. Status: Squeezing liner lap.
Cmt retainer at 12,011. Isloated leak, tested down to within 20' of liner lap and still leaking.
Mud: (.796) 15.3 x 53 x 4.6

SEP 18 1980

UTAH

ALTAMONT
Shell-Tenneco-Lopez 1-15A3
(D) Brinkerhoff #69
15,800' Flagstaff/Wasatch
$2017M/$1320M
WI - 56.25%
EL 6420'
20" csg @ 45'
13-3/8" csg @ 285'
9-5/8" csg @ 7705'
7" csg @ 12,488'
5" csg @ 15,790'

15,792/0//98/80. Status: Prep. to drill retainer.
Recovered 2 bbls of chaser water indicating cmt was spotted in proper interval. Squeezed liner lap, squeezed up 100 sx Class "H", 0.3% LWL.
Mud: (.796) 15.3 x 53 x 4.6

SEP 19 1980

UTAH

ALTAMONT
Shell-Tenneco-Lopez 1-15A3
(D) Brinkerhoff #69
15,800' Flagstaff/Wasatch
$2062M/$1320M
WI - 56.25%
EL 6420'
20" csg @ 45'
13-3/8" csg @ 285'
9-5/8" csg @ 7705'
7" csg @ 12,488'
5" csg @ 15,790'

9-20-80
15,792/0//99/80. Status: Prep. to drill cmt.
Mill on E-Z Drill Retainer. Drill cmt to 12,242'.
W. O. Cmt.
Mud: (.796) 15.3 x 49 x 4.8

9-21-80
15,792/0//100/80. Status: Laying down DP.
Drilled cmt.
Mud: (.796) 15.3 x 49 x 4.8

9-22-80
15,792/0//101//80. Status: Nipple down.

UTAH

ALTAMONT
Shell-Tenneco-Lopez 1-15A3
(D) Brinkerhoff #69
15,800' Flagstaff/Wasatch
$2073M/$1320M
WI - 56.25%
EL 6420'
20" csg @ 45'
13-3/8" csg @ 285'
9-5/8" csg @ 7705'
7" csg @ 12,488'
5" csg @ 15,790'

TD 15,792/0//102/80. Status: Rig released.
Released rig at 4:00 PM 9-22-80.
Cost $2,073,338

SEP 23 1980

WELL: SHELL TENNECO 1-15A3
LABEL: FIRST REPORT
AFE: 588181
FOREMAN: K.J. DESHOTEL
RIG: W.O.W.S. #17
OBJECTIVE: PERFORATE ACIDIZE AND PLACE WELL ON PRODUCTION
DAILY COST: 5400
CUM COST: 5400
DATE: 11-7-80 11-8-80 11-9-80 11-10-80
ACTIVITY: 11-7-80 STATUS: MOVE TO LOCATION AND RIG UP
02 11-7-80 ACTIVITY: FIRST REPORT ON THIS LOCATION
03 NEWLY DRILLED WELL AFE#588181 PROVIDES FUNDS TO
04 CIRCULATE MUD OUT OF WELL CLEAN LINER OUT TO
05 15740 FT. PERFORATE ACID TREAT AND PLACE WELL ON
06 PRODUCTION IN LOWER WASATCH INTERVAL. TD-15792 FT.
07 MOVE RIG AND EQUIPMENT TO LOCATION AND RIG UP
08 PREPARE TO START COMPLETION WORK 11-10-80 S.D.R.O.
09 DATE: 11-8-80 STATUS : SHUTDOWN
10 DATE: 11-9-80 STATUS: SHUT DOWN
11 DATE: 11-10-80 STATUS: CIRCULATE MUD OUT OF HOLE

LABEL: 801111
DAILY COST: 3350
CUM COST: 8750
DATE: 11-10-80
ACTIVITY: 11-10-80 STATUS: PICK UP TUBING AND CIRCULATE
02 MUD OUT OF HOLE
03 11-10-80 ACTIVITY: REMOVE WELLHEAD FLANGE AND
04 VALVE INSTALL BOPS TALLY 27/8 IN. TBG AND RIH TO
05 4000 FT. AND CIRCULATE MUD OUT OF HOLE. PICK UP
06 27/8 IN. TBG AND RIH TO 8000 FT. AND CIRCULATE
07 MUD OUT OF HOLE PICK UP 27/8 IN. TBG AND RIH TO
08 12000 FT. S.D.O.N.
09 11-11-80 STATUS: CIRCULATE MUD OUT OF HOLE AND

Form OGC-1b

STATE OF UTAH
DEPARTMENT OF NATURAL RESOURCES
DIVISION OF OIL, GAS, AND MINING

SUBMIT IN TRIPLICATE*
(Other instructions on reverse side)

SUNDRY NOTICES AND REPORTS ON WELLS

(Do not use this form for proposals to drill or to deepen or plug back to a different reservoir. Use "APPLICATION FOR PERMIT—" for such proposals.)

1. OIL WELL [X] GAS WELL [ ] OTHER

2. NAME OF OPERATOR: Shell Oil Company

3. ADDRESS OF OPERATOR: P. O. Box 831, Houston, TX 77001

4. LOCATION OF WELL (Report location clearly and in accordance with any State requirements.* See also space 17 below.) At surface: 1053' FNL, 1215' FEL

5. LEASE DESIGNATION AND SERIAL NO.: Shell Lease 301881, 30188

6. IF INDIAN, ALLOTTEE OR TRIBE NAME:

7. UNIT AGREEMENT NAME: Altamont

8. FARM OR LEASE NAME:

9. WELL NO.: 1-15A3

10. FIELD AND POOL, OR WILDCAT: Altamont

11. SEC., T., R., M., OR BLK. AND SURVEY OR AREA: Sec. 15 T1S R3W

12. COUNTY OR PARISH: Duchesne

13. STATE: Utah

14. PERMIT NO.:

15. ELEVATIONS (Show whether DF, RT, GR, etc.):

16. **Check Appropriate Box To Indicate Nature of Notice, Report, or Other Data**

NOTICE OF INTENTION TO:				SUBSEQUENT REPORT OF:			
TEST WATER SHUT-OFF	[ ]	PULL OR ALTER CASING	[ ]	WATER SHUT-OFF	[ ]	REPAIRING WELL	[ ]
FRACTURE TREAT	[ ]	MULTIPLE COMPLETE	[ ]	FRACTURE TREATMENT	[ ]	ALTERING CASING	[ ]
SHOOT OR ACIDIZE	[ ]	ABANDON*	[ ]	SHOOTING OR ACIDIZING	[ ]	ABANDONMENT*	[ ]
REPAIR WELL	[ ]	CHANGE PLANS	[ ]	(Other) Well Status Report			[X]
(Other)			[ ]	(NOTE: Report results of multiple completion on Well Completion or Recompletion Report and Log form.)			

17. DESCRIBE PROPOSED OR COMPLETED OPERATIONS (Clearly state all pertinent details, and give pertinent dates, including estimated date of starting any proposed work. If well is directionally drilled, give subsurface locations and measured and true vertical depths for all markers and zones pertinent to this work.)*

Well is still in the testing stage to determine if it can be produced commercially.

18. I hereby certify that the foregoing is true and correct

SIGNED [signature] TITLE Manager, Production Adminstration DATE 1-5-81

(This space for Federal or State office use)

APPROVED BY _____ TITLE _____ DATE _____

CONDITIONS OF APPROVAL, IF ANY:

*See Instructions on Reverse Side

ALTAMONT OPERATIONS
DAILY COMPLETIONS AND REMEDIALS REPORT
WELL HISTORY FOR WELL 349
ISSUED 01/19/81

10 CLEAN OUT LINER

LABEL: 801112
DAILY COST: 4150
CUM COST: 12900
DATE: 11-11-80
ACTIVITY: 11-11-80 STATUS: CIRCULATE MUD OUT OF HOLE AND
02 CLEAN OUT LINER
03 11-11-80 ACTIVITY: ATTEMPT TO CIRCULATE MUD OUT OF
04 HOLE AT 12000 FT. UNABLE TO CIRCULATE MUD OUT
05 BECAUSE OF PRESSURE . POOH TO 9000 FT. AND CIRCULATE
06 MUD OUT RIH TO 10000 FT. AND CIRCULATE MUD OUT
07 RIH TO 11000 FT. AND CIRCULATE MUD OUT OF HOLE
08 RIH TO 12000 FT. CIRCULATE MUD OUT RIH AND TAG
09 AT 12252 FT. LINER TOP AT 12265 FT. PICK UP POWER
10 SWIVEL CIRCULATE MUD OUT OF HOLE AND STARTED
11 MILLING MILLED FOR APPX. 45 MIN. AND MADE 4 FT.
12 FROM 12252 FT. TO 12256 FT. S.D.O.N.
13 11-12-80 STATUS: CLEAN OUT 5 IN. LINER

LABEL: 801114
DAILY COST: 3950
CUM COST: 20500
DATE: 11-12 AND 11-13-80
ACTIVITY: 11-12-80 STATUS: CLEAN OUT 5 IN. LINER
02 11-12-80 ACTIVITY: RIH TO 12252 FT. AT TAG PICK
03 UP PWR SVL ESTABLISHED CIRCULATION AND STARTED
04 MILLING SWVL MILLED DOWN TO 12256 FT. IN 15 MIN.
05 MILLED AT 12256 FOR APPX 4 HRS. AND MADE 1 FT. TO
06 12257 FT. HALIBURTON 7 IN. CEMENT RETAINER APPEARS
07 TO BE SPINNING BELOW MILL LAY BACK AND POOH WITH
08 TBG AND MILL 41/8 IN. MILL WORN BOTTEM OF MILL
09 HAD PIECES OF C.I. OR CEMENT RETAINER S.D.O.N.
10 11-13-80 STATUS: RIH WITH 41/8 IN. BIT AND DRILL COLLARS
11 11-13-80 ACTIVITY: MAKE UP 41/8 IN. ROCK BIT 4 31/8
12 IN. DRILL COLLARS AND RIH TO 12257 FT. AND TAG
13 PICK UP PWR SWVL CIRCULATE HOLE FOR 1 HR GOING
14 REVERSE GETTING PIECES OF C.I. IN RETURNS STARTED
15 DRILLING IN 1 HR DRILLED FROM 12257 FT. TO 12288 FT.
16 (LINER TOP AT 12265) CIRCULATE HOLE FOR 1 HR PICK
17 UP TBG AND RIH TO 12460 FT. HAVING TO ROTATE SWVL
18 WHILE GOING DOWN CIRCULATE BOTTOMS UP PULL UP OUT

ALTAMONT OPERATIONS
DAILY COMPLETIONS AND REMEDIALS REPORT
WELL HISTORY FOR WELL 349
ISSUED 01/19/81

19 OF LINER INTO 7 IN. CSG AT 12200 S.D.O.N.
20 11-14-80 STATUS: CLEAN OUT 5 IN. LINER

LABEL: -----
DAILY COST: 3650
CUM COST: 24150
DATE: 11-14 AND 11-15-80
ACTIVITY: 11-14-80 STATUS: CLEAN OUT 5 IN. LINER.
02 11-14-80 ACTIVITY: POOH WITH TBG. 4 3 1/8 IN.
03 DRILL COLLARS AND BIT. BOTTOM OF BIT WORN MAKE UP
04 4 1/8 IN. MILL AND RIH TO 12260 FT. AND TAG. PICK
05 UP POWER SWIVEL AND ESTABLISH CIRCULATION GOING
06 REVERSE AND STARTED MILLING. MILLED FOR APPX.
07 2 HRS. BEFORE FALLING THROUGH. MILLED DOWN TO
08 12340 FT. WHILE CIRCULATING. PULL UP OUT OF LINER
09 AND S.D.O.N.
10 11-15-80 STATUS: CLEAN OUT 5 IN. LINER.

LABEL: -----
DAILY COST: 3650
CUM COST: 27800
DATE: 11-15 AND 11-16 AND 11-17-80
ACTIVITY: 11-15-80 STATUS: CLEAN OUT 5 IN. LINER.
02 11-15-80 ACTIVITY: RIH TO 12260 FT. AND TAG. PICK
03 UP POWER SWIVEL ESTABLISH CIRCULATION AND STARTED
04 MILLING - MILLED @ 12260 FT. FOR 1 HR. BEFORE
05 FALLING THROUGH. RIH TO 12500 FT. AND CIRCULATE MUD OUT
06 OF HOLE. RIH TO 13000 FT. AND CIRCULATE MUD
07 OUT OF HOLE. RIH TO 13300 FT. AND CIRCULATE MUD
08 OUT OF HOLE. PULL UP OUT OF LINER TO 12200 FT.
09 AND S.D.R.O.
10 11-16-80 STATUS: SHUT DOWN SUNDAY.
11 11-17-80 STATUS: CLEAN OUT 5 IN. LINER.

LABEL: -----
DAILY COST: 3950
CUM COST: 31750
DATE: 11-17 AND 11-18-80
ACTIVITY: 11-17-80 STATUS: CLEAN OUT 5 IN. LINER.
02 11-17-80 ACTIVITY: RIH TO 13360 FT. AND TAG -
03 PICK UP POWER SWIVEL - ESTABLISH CIRCULATION AND
04 STARTED MILLING. MILLED FOR APPX. 30 MINUTES

ALTAMONT OPERATIONS
DAILY COMPLETIONS AND REMEDIALS REPORT
WELL HISTORY FOR WELL 349
ISSUED 01/19/81

05 BEFORE FALLING THROUGH. RIH TO 14500 FT. AND CIRCU-
06 LATE MUD OUT OF HOLE. RIH TO 15706 FT. PUSHING PIECES
07 OF HALLIBURTON CEMENT RETAINER AHEAD - CIRCULATE
08 MUD OUT OF HOLE. STARTED MILLING - MILLED FOR
09 APPX 1.5 HRS. DID NOT MAKE ANY HOLE. MILL APPEARS
10 TO BE WORN. LAY BACK SWIVEL. P.O.O.H. TO 12200 FT.
11 S.D.O.N.
12 11-18-80 STATUS: RIH WITH NEW MILL . CLEAN OUT
13 5 IN. LINER.

LABEL: -----
DAILY COST: 3650
CUM COST: 35400
DATE: 11-18 AND 11-19-80
ACTIVITY: 11-18-80 STATUS: RIH WITH NEW MILL AND FINISH
02 CLEANING OUT 5 IN. LINER.
03 11-18-80 ACTIVITY: P.O.O.H. WITH TUBING AND MILL
04 MILL WORN WITH PIECES OF HALLIBURTON PACKER INSIDE.
05 MAKE UP NEW 4 1/8 IN. O.P. MILL AND RIH TO 15650 FT.
06 AND CIRCULATE BOTTOMS UP. PICK UP POWER SWIVEL
07 AND PREPARE TO FINISH CLEANING OUT. S.D.O.N.
08 11-19-80 STATUS: FINISH CLEANING OUT 5 IN. LINER

LABEL: -----
DAILY COST: 3650
CUM COST: 39050
DATE: 11-19 AND 11-20-80
ACTIVITY: 11-19-80 STATUS: FINISH CLEANING OUT 5 IN. LINER.
02 11-19-80 ACTIVITY: R.I.H. TO 15706 FT. AND TAG.
03 ESTABLISH CIRCULATION GOING REVERSE AND STARTED
04 MILLING. MILLED FOR APPX. 1 HR. MADE 2 FT. TO
05 15708 FT. TUBING MEASUREMENT BEFORE FALLING
06 THROUGH FLOAT COLLAR (@ 15713 FT. MEASUREMENT
07 OF PROGNOSIS AND DRILLING REPORT.) ATTEMPTED TO
08 PULL BACK THROUGH @ 15708 FT. MILL STUCK - UNABLE
09 TO PUMP GOING REVERSE. HOOK UP AND PUMP DOWN
10 TUBING @ 2000 PSI CIRCULATING HOLE. WORK TUBING
11 UP AND DOWN FOR 4 HRS. TRYING TO GET MILL FREE -
12 UNABLE TO PULL MILL FREE. MOVE IN RIG UP MCCULLOUGH
13 AND R.I.H. WITH CHEMICAL CUTTER TO 15700 FT.
14 CHEMICAL CUTTER DID NOT FIRE. P.O.O.H. AND S.D.O.N.
15 11-20-80 STATUS: CUT TUBING OFF ABOVE MILL.

ALTAMONT OPERATIONS
DAILY COMPLETIONS AND REMEDIALS REPORT
WELL HISTORY FOR WELL 349
ISSUED 01/19/81

LABEL: -----
DAILY COST: 6685
CUM COST: 45735
DATE: 11-20 AND 11-21-80
ACTIVITY: 11-20-80 STATUS: CUT TUBING OFF ABOVE MILL.
02 11-20-80 ACTIVITY: RIG UP MCCULLOUGH AND R.I.H.
03 WITH 2 1/8 IN. CHEMICAL CUTTER AND TAG @ 15707 FT.
04 WIRE LINE MEASUREMENTS. PULL UP TO 15705 FT. AND
05 CUT TBG. P.O.O.H. RIG DOWN MCCULLOUGH. P.O.O.H.
06 LAYING DOWN 2 7/8 IN. TBG. PULL UP TO 12200 FT.
07 (LINER TOP @ 12265 FT.) AND PRESSURE TEST CASING AND
08 LINER TO 3500 PSI SURFACE PRESSURE. HELD PRESSURE
09 FOR 30 MINUTES WITH NO BLEED OFF. P.O.O.H. WITH TBG.
10 LEFT IN HOLE @ FLOAT COLLAR 12 FT. 4 1/8 IN. MILL -
11 12 FT. X 545 - 10 FT. OF 2 7/8 IN. TBG. BOTTOM OF
12 4 1/8 IN. @ 15719 FT. TOP OF 2 7/8 IN. TBG. @ 15705
13 FT. MIRU OWP WITH 1000 FT. SURFACE PRESSURE ON
14 CASING RAN GR - CBL - CCL LOG - FOUND PBTD @ 15682
15 FT. RAN LOG FROM 15682 FT. TO 12100 FT. CBL INDICATES
16 POOR BONDING ONLY ABOUT 30 PERCENT. RIG DOWN O.W.P.
17 S.D.O.N.
18 11-21-80 STATUS: PERFORATE.

LABEL: 801122
DAILY COST: 39129
CUM COST: 84864
DATE: 11-21-80
ACTIVITY: 11-21-80 STATUS: PERFORATE
02 11-21-80 ACTIVITY: MIRU OWP AND MADE 1ST PRFTNG
03 RUN FOUND PBTD AT 15682 FT. FLUID LEVEL AT SURFACE
04 PERFORATED FROM 15682 FT. TO 15354 FT. NO PRESSURE
05 2ND RUN PERFORATED FROM 15338 FT. 14984 FT. FLUID
06 LEVEL AT SURFACE NO PRESSURE 3RD RUN PERFORATED
07 FROM 14968 FT. TO 14574 FT. FLUID LEVEL AT SURFACE
08 1500 LBS. PRESSURE 4TH RUN PERFORATED FROM 14504 FT.
09 TO 14112 FT. 2500 LBS. PRESSURE 5TH RUN PERFORATED
10 FROM 14101 FT. TO 13834 FT. 3500 LBS. PRESSURE
11 6TH AND LAST RUN PERFORATED FROM 13828 FT. TO 13678 FT.
12 4000 LBS. PRESSURE MADE A TOTAL OF 6 PERFORATING
13 RUNS THIS DATE AND PERFORATED 133 SELECTIONS 399
14 HOLES FROM 15682 FT. TO 13678 FT. RIH AND SET

ALTAMONT OPERATIONS
DAILY COMPLETIONS AND REMEDIALS REPORT
WELL HISTORY FOR WELL 349
ISSUED 01/19/81

15 FA-1 PACKER WITH EXPENDABLE PLUG AT 13600 FT.
16 S.D.O.N.
17 11-22-80 STATUS: RUN PRODUCTION EQUIPMENT

LABEL: -----
DAILY COST: 9220
CUM COST: 97934
DATE: 11-22 AND 11-23 AND 11-24-80
ACTIVITY: 11-22-80 STATUS: RUN PRODUCTION EQUIPMENT.
02 11-22-80 ACTIVITY: R.I.H. WITH TBG. AND TAG PACKER
03 @ 13600 FT. PULL UP 10 FT. ABOVE AND PUMP 600
04 BARRELS CLEAN HOT PRODUCE WATER TO CLEAN UP 7 IN.
05 CSG. LATCH INTO FA-1 PACKER @ 13600 + OR - AND
06 LAND TBG. WITH 16000# TENSION. PRESSURE TEST CASING
07 AND SEALS TO 3000 PSI BOTH OK. PRESSURE TEST TUBING
08 TO 6500 PSI TBG. OK. REMOVE BOPS AND INSTALL
09 10000# WELLHEAD. MIRU OWP AND R.I.H. TO 590 FT.
10 COULD NOT GET BELOW THIS POINT BECAUSE OF WAX.
11 SURGE TUBING SEVERAL TIMES WITH RIG PUMP COULD NOT
12 GET BELOW 590 FT. RIG DOWN OWP S.D.O.N.
13 11-23-80 STATUS: CLEAN OUT TBG. AND KNOCK OUT PLUG.
14 11-23-80 ACTIVITY: REMOVE 10000# WELLHEAD. INSTALL
15 BOPS - RELEASE TUBING FROM FA PACKER. PUMP 100
16 BARRELS HOT PRODUCE WATER DOWN CASING. R.I.H.
17 WITH WAX CUTTER TO 8000 FT. P.O.O.H. PUMP 200
18 BARRELS HOT PRODUCED WATER GOING REVERSE. LATCH
19 INTO FA PACKER - LAND TUBING WITH 16000 TENSION
20 TEST CASING AND SEALS TO 3000 PSI - BOTH OK.
21 TEST TBG. TO 6500 PSI OK - REMOVE BOPS AND INSTALL
22 10000 WELLHEAD. MIRU OWP AND RIH TO 13600 FT. WITH
23 SINKER BARS - PRESSURE TBG. TO 5000 PSI AND KNOCK
24 PLUG OUT. WELL EQUALIZED @ 4000 PSI. P.O.O.H. AND
25 RIG DOWN OWP. OPEN WELL TO PIT PRESSURE FELL TO
26 ZERO. FLOWED WELL TO PIT FOR 3 HRS. WITH 1 IN.
27 WATER STREAM. S.D.O.N.
28 11-24-80 STATUS: ATTEMPT TO UNLOAD WELL.

LABEL: 801125
DAILY COST: 2650
CUM COST: 100584
DATE: 11-24-80
ACTIVITY: 11-24-80 STATUS: ATTEMPT TO UNLOAD WELL

ALTAMONT OPERATIONS
DAILY COMPLETIONS AND REMEDIALS REPORT
WELL HISTORY FOR WELL 349
ISSUED 01/19/81

02 11-24-80 ACTIVITY: T.P.-4500 LBS. OPENED WELL TO
03 PIT BLED OFF TO 0 LBS. SWITCHED TO FLAT TANK
04 FLOWED TO TANK 10 HRS. AVG. T.P. 50#. FLOWED
05 50 BBLS. H20 100 BBLS. OIL.
06 11-25-80 STATUS: ACIDIZE WELL.

LABEL: -----
DAILY COST: 45480
CUM COST: 146064
DATE: 11-25 AND 11-26-80
ACTIVITY: 11-25-80 ACTIVITY: R.P.-2400# MIRU DOWELL HELD
02 SAFETY MEETING. PRESS TEST CSG TO 3500#. PRESS
03 TEST LINES TO 10000# AND ACIDIZE AS FOLLOWS : MAX
04 PRESS-9200# AVG.-8800# MIN.-7400# MAX RATE-14BPM
05 AVG.-11BPM MIN.-8BMP ISIP-6500# 5MIN.-6050#
06 10 MIN. -6000# 15 MIN. -6000# 20 MIN.-6000# TOTAL
07 ACID 960 BBL. 7 1/2 PERCENT FLUSH-120 BBL. H20
08 400 7/8 IN. RCN BALLS 7000# BENGOIC ACID FLAKES.
09 RIG DOWN DOWELL MIRU OWP TO RUN RA LOG. SET
10 DOWN @ 14760 FT. (PROBABLE ACID FLAKES) START
11 LOGGING. INSTRUMENT SHORTED OUT AFTER 300 FT.
12 P.O.O.H. S.D.O.N.
13 11-26-80 STATUS: RUN RA LOG AND FLOW WELL.

LABEL: 801201
DAILY COST: 9981
CUM COST: 156045
DATE: 11-26 AND 11-27 AND 11-28 AND 11-29 AND 11-30-80
ACTIVITY: 11-26-80 STATUS: LOG WELL AND FLOW WELL
02 11-26-80 ACTIVITY: SI TP-4500 LBS. OWP MAKE UP
03 NEW RA LOGGING TOOL RIH TOOL MALFUNCTIONED POOH
04 MAKE REPAIRS TO INSTRUMENTS RIH TAG TD AT 15671 FT.
05 LOG TO 1300 FT. OPEN WELL TO PIT UNTIL FLOWING
06 OIL SWITCH INTO FLAT TAND FOR APPROX. 1 HR MAKING
07 OIL TP 600 LBS. ON 42/64 TURN WELL INTO TREATER
08 11-27-80 STATUS: FLOW WELL
09 11-27-80 ACTIVITY: OIL 182-WTR 213-MCF GAS 238
10 TP 1100 LBS.-CHOKE 24/64-9 HRS
11 11-28-80 ACTIVITY: OIL 348-WTR 681-MCF GAS 635
12 TP 100 LBS.-CHOKE 24/64-24 HRS
13 11-29-80 ACTIVITY: OIL 285-WTR 549-MCF GAS 515
14 TP 800 LBS.-CHOKE 24/64-24 HRS

ALTAMONT OPERATIONS
DAILY COMPLETIONS AND REMEDIALS REPORT
WELL HISTORY FOR WELL 349
ISSUED 01/19/81

15 11-30-80 ACTIVITY : OIL 283 -WTR 604-MCF GAS 444
16 TP 480 LBS.-CHOKE 24/64 -24 HRS

LABEL: -----
DAILY COST: NONE
CUM COST: 156045
DATE: 12-1-80
ACTIVITY: 12-1-80 ACTIVITY: OIL - 317 WATER - 625 GAS-
02 391 MCF TP - 400 # CHOKE - 24/64 24 HRS.

LABEL: -----
DAILY COST: 3300
CUM COST: 159345
DATE: 11-27 11-30 12-1 12-2 AND 12-3-80
ACTIVITY: 11-27-80 - 11-30-80 STATUS: FLOWED WELL - RIG DOWN
02 FOR HOLIDAYS.
03 12-1-80 STATUS: FLOWED WELL - RIG ON STAND-BY.
04 12-2-80 STATUS: PUT WELL ON GAS LIFT.
05 12-2-80 ACTIVITY: FLOWING TP-600#. ATTEMPT TO
06 PUMP PRODUCED H2O DOWN TUBING TO KILL WELL. UNABLE
07 TO KILL WELL TO RUN G.L. EQUIPMENT. RIG DOWN
08 AND PREPARE TO MOVE RIG. S.D.O.N.
09 12-2-80 LASTEST TEST DATA : OIL-427 WATER-574
10 GAS-476 TP-600# CHOKE-24/64 24 HRS.
11 12-3-80 STATUS: FLOW WELL - MOVE RIG TO 1-13B5.

LABEL: -----
DAILY COST: 3300
CUM COST: 159345
DATE: 12-3-80
ACTIVITY: 12-3-80 ACTIVITY: OIL-544 WATER-333 GAS-670 MCF.
02 TP-500# CHOKE-30/64 20 HOURS.

LABEL: -----
DAILY COST: NONE
CUM COST: 159345
DATE: 12-4-80
ACTIVITY: 12-4-80 ACTIVITY: OIL-728 WATER-250 GAS-661 MCF.
02 TP-300# CHOKE-41/64 24 HOURS.

LABEL: -----
CUM COST: 159345

ALTAMONT OPERATIONS
DAILY COMPLETIONS AND REMEDIALS REPORT
WELL HISTORY FOR WELL 349
ISSUED 01/19/81

DATE:	12-5 AND 12-6 AND 12-7-80
ACTIVITY:	12-5-80 688 OIL- 211 WTR- 643 MCF GAS.
02	12-6-80 584 OIL- 184 WTR- 573 MCF GAS- 500 TBG-
03	31/64 CHOKE.
04	12-7-80 430 OIL- 153 WTR- 597 MCF GAS- 500 TBG.
05	31/64 CHOKE.
LABEL:	-----
DAILY COST:	NONE
CUM COST:	159345
DATE:	120980
ACTIVITY:	12-09-80 ACTIVITY: OIL-482 WTR-141 MCF GAS-608
02	FTP-100 CHOKE-35/64 24 HOURS.
LABEL:	-----
DAILY COST:	2550
CUM COST:	184361
DATE:	1-16 AND 1-17 AND 1-18-81
ACTIVITY:	1-16-81 STATUS: M.I.R.U. - PUMPED HOT WATER
02	DOWN TUBING TO CLEAN OUT - RIG UP WIRE LINE TRUCK
03	CUT WAX DOWN TO 9000 FT. WHILE PUMPING WATER - RIG
04	WIRELINE TRUCK DOWN - FLUSHED TUBING WITH HOT WATER -
05	STRING SEAL ASSEMBLY OUT OF PACKER - STARTED OUT
06	OF THE HOLE. S.D.O.N.
07	1-17-81 STATUS: KILLED WELL - PULLED THE TUBING
08	THE REST OF THE WAY OUT OF THE HOLE. PUT ON A NEW
09	SEAL ASSEMBLY - R.I.H. WHILE PUTTING ON GAS LIFT.
10	MANDRELS - TOP MANDRELS HAD BAD THROADS. S.D.O.N.
11	1-18-81 SUNDAY: SHUTDOWN

Form OGCC-3

STATE OF UTAH

OIL & GAS CONSERVATION COMMISSION

SUBMIT IN DUPLICATE* (See other instructions on reverse side)

WELL COMPLETION OR RECOMPLETION REPORT AND LOG*

1a. TYPE OF WELL: OIL WELL [X] GAS WELL [ ] DRY [ ] Other

b. TYPE OF COMPLETION: NEW WELL [X] WORK OVER [ ] DEEP-EN [ ] PLUG BACK [ ] DIFF. RESVR. [ ] Other

2. NAME OF OPERATOR: Shell Oil Company

3. ADDRESS OF OPERATOR: P.O. Box 831 Houston, Tx 77001 ATTN: C.E. Tixier Rm. #1916

4. LOCATION OF WELL (Report location clearly and in accordance with any State requirements)*

At surface ~~1591' FEL & 925' FNL~~ Sec. 15

At top prod. interval reported below * 1053 FNL & 1215 FEL

At total depth

5. LEASE DESIGNATION AND SERIAL NO.

6. IF INDIAN, ALLOTTEE OR TRIBE NAME

7. UNIT AGREEMENT NAME: UNIT

8. FARM OR LEASE NAME: LOPEZ

9. WELL NO.: 1-15A3

10. FIELD AND POOL, OR WILDCAT: Undesignated

11. SEC., T., R., M., OR BLOCK AND SURVEY OR AREA: T1S R3W Sec 15

14. PERMIT NO.: 43-013-30529 DATE ISSUED: 4-24-80

12. COUNTY OR PARISH: DUCHESNE 13. STATE: Utah

15. DATE SPUDDED	16. DATE T.D. REACHED	17. DATE COMPL. (Ready to prod.)	18. ELEVATIONS (DF, RKB, RT, GR, ETC.)*	19. ELEV. CASINGHEAD
6-11-80	9-22-80	12-2-80	6420' GL	

20. TOTAL DEPTH, MD & TVD	21. PLUG, BACK T.D., MD & TVD	22. IF MULTIPLE COMPL., HOW MANY*	23. INTERVALS DRILLED BY	ROTARY TOOLS	CABLE TOOLS
15,792'			→	✓	

24. PRODUCING INTERVAL(S), OF THIS COMPLETION—TOP, BOTTOM, NAME (MD AND TVD)*: WASATCH 13,678'–15,718'

25. WAS DIRECTIONAL SURVEY MADE

26. TYPE ELECTRIC AND OTHER LOGS RUN

27. WAS WELL CORED: No

28. CASING RECORD (Report all strings set in well)

CASING SIZE	WEIGHT, LB./FT.	DEPTH SET (MD)	HOLE SIZE	CEMENTING RECORD	AMOUNT PULLED
20"		45'			
13 3/8"	54.5#	285'	17 1/2"	400 sx	
9 5/8"	43.5#	7705'	12 1/4"	370 sx	
7"	29#	12,488'	8 3/4"	1075 sx	

29. LINER RECORD

SIZE	TOP (MD)	BOTTOM (MD)	SACKS CEMENT*	SCREEN (MD)
5"		15,790'	575 sx	

30. TUBING RECORD

SIZE	DEPTH SET (MD)	PACKER SET (MD)
2 7/8"	12,000'	13,600'

31. PERFORATION RECORD (Interval, size and number)

13,678'–15,718' AT INTERVALS

411 shots

32. ACID, SHOT, FRACTURE, CEMENT SQUEEZE, ETC.

DEPTH INTERVAL (MD)	AMOUNT AND KIND OF MATERIAL USED
GROSS PERFS	960 Bbls 7 1/2% HCL

33.* PRODUCTION

DATE FIRST PRODUCTION: 11-27-80 PRODUCTION METHOD (Flowing, gas lift, pumping—size and type of pump): FLOWING WELL STATUS (Producing or shut-in): PRODUCING

DATE OF TEST	HOURS TESTED	CHOKE SIZE	PROD'N. FOR TEST PERIOD	OIL—BBL.	GAS—MCF.	WATER—BBL.	GAS-OIL RATIO
12-9-80	24	35/64	→	480	597	159	1243

FLOW. TUBING PRESS.	CASING PRESSURE	CALCULATED 24-HOUR RATE	OIL—BBL.	GAS—MCF.	WATER—BBL.	OIL GRAVITY-API (CORR.)
100	∅	→	480	597	159	NM

34. DISPOSITION OF GAS (Sold, used for fuel, vented, etc.): Sold

TEST WITNESSED BY

35. LIST OF ATTACHMENTS

36. I hereby certify that the foregoing and attached information is complete and correct as determined from all available records

SIGNED C. Tixier TITLE DIVISION PROD. ENGINEER DATE 1-26-81

*(See Instructions and Spaces for Additional Data on Reverse Side)

SHELL OIL CO.
RM-62 (Rev. 8-72)

CASING AND CEMENTING

Field ALTAMONT Well SHELL-TENNECO-LOPEZ 14SA3

Job: 5 " O.D. ~~Casing~~/Liner. Ran to 15,790 feet (KB) on 9/15, 198 0

Jts.	Wt.	Grade	Thread	New	Feet	From KB / CHF	To CHF
BURNS PLAIN TYPE LINER HANGER					6.80	12,265.08	12,271.88
24	18.0	N-80	SFJ-P	✓	987.77		13,259.65
63	18.0	P-110	SFJ-P	✓	2451.22		15,710.87
FLOAT COLLAR				✓	1.72		15,712.59
2	18.0	P-110	SFJ-P	✓	75.15		15,787.74
FLOAT SHOE				✓	2.26		15,790.00

Casing Hardware:
Float shoe and collar type HALLIBURTON DIFFERENTIAL FILL
Centralizer type and product number —
Centralizers installed on the following joints —
Other equipment (liner hanger, D.V. collar, etc.) BAKERLINE "BURNS" PLAIN TYPE

Cement Volume:
Caliper type _____. Caliper volume _____ ft^3 + excess over caliper 25% + 300' FILLUP IN 7"
_____ ft^3 + float collar to shoe volume _____ ft^3 + liner lap _____ ft^3
+ cement above liner _____ ft^3 = _____ ft^3 (Total Volume).

Cement:
Preflush—Water — bbls, other 14 PPG CMT Volume 10 bbls
First stage, type and additives CLASS "H", 0.75% CFR-2, 35% SILICA FLOUR, 0.5% HR-8
_____. Weight 15.6 lbs/gal, yield 1.56 ft^3/sk
ft^3/sk, volume 575 sx. Pumpability 5½ + hours at 290 °F.
Second stage, type and additives _____
_____. Weight _____ lbs/gal, yield _____
ft^3/sk, volume _____ sx. Pumpability _____ hours at _____ °F.

Cementing Procedure:
Rotate/reciprocate _____
Displacement rate 2-4 BPM
Percent returns during job 100%
Bumped plug at 11:30 ~~AM/PM~~ with 1950 psi. Bled back 3/4 bbls. Hung csg with — lbs on slips.

Remarks:
— DIFFERENTIAL FLOAT EQUIPMENT DID NOT WORK WHILE GOING TO BTM.

Drilling Foreman [signature]
Date 9/16/80

SHELL OIL CO.
RM 62 (Rev. 8-72)

CASING AND CEMENTING

Field ALTAMONT Well SHELL-TENNECO-LOPEZ 1-15A3

Job: 7 " O.D. Casing/~~Liner~~. Ran to 12,488 feet (KB) on 8/4, 1980

Jts.	Wt.	Grade	Thread	New	Feet	From	To
					22.83	KB	CHF
1	29#	JL-95	LT&C	✓	8.09	CHF	30.92
44	29#	S-95	LT&C	✓	1892.68		1923.60
244	29#	JL-95	LT&C	✓	10,499.39		12,422.99
		FLOAT COLLAR			1.95		12,424.94
2	29#	JL-95	LT&C		60.64		12,485.58
		FLOAT SHOE			2.42		12,488.00

Casing Hardware:
Float shoe and collar type HALLIBURTON DIFFERENTIAL FILL
Centralizer type and product number BOW SPRING 807.91249
Centralizers installed on the following joints 1, 2, 4, 6

Other equipment (liner hanger, D.V. collar, etc.) —

Cement Volume:
Caliper type COMPENSATED NEUTRON - FORMATION DENSITY +25%. Caliper volume _____ ft³ + excess over caliper _____ ft³ + float collar to shoe volume _____ ft³ + liner lap _____ ft³ + cement above liner _____ ft³ = _____ ft³ (Total Volume).

Cement:
Preflush—Water 10 bbls, other LIGHT CMT Volume 10 bbls
First stage, type and additives 50:50 POZ w/ 2% GEL, 0.5% HALAD-9, 1/4 LB/SK FLOCELE, 1% CFR-2. Weight 13.7 lbs/gal, yield 1.24 ft³/sk, volume 875 sx. Pumpability _____ hours at _____ °F.
Second stage, type and additives CLASS "H" w/ 0.3% HR-5. Weight 15.8 lbs/gal, yield 1.15 ft³/sk, volume 200 sx. Pumpability _____ hours at _____ °F.

Cementing Procedure:
Rotate/reciprocate *
Displacement rate 6 BPM
Percent returns during job 75% AFTER CMT. LEFT SHOE
Bumped plug at 6:23 AM/~~PM~~ with 1700 psi. Bled back 2½ bbls. Hung csg with 308,000 lbs on slips.

Remarks:
* STUCK PIPE 8' OFF BOTTOM TRYING TO RECIPROCATE & REGAIN GOOD CIRCULATION.

Drilling Foreman [signature]
Date 8/4/80

SHELL OIL CO.
RM-42 (Rev. 8-72)

CASING AND CEMENTING

Field Altoona Well Shell Seneca 1-15A3

Job: 9 5/8 " O.D. Casing/Liner. Ran to 7205 feet (KB) on 7-2 19 80

Jts.	Wt.	Grade	Thread	New	Feet	From	To
						KB 22.83 CHF	
188	40	K55	8RSBC	New	7718.17	CHF	

Casing Hardware:
Float shoe and collar type Guide Shoe Float Collar Differential Fill
Centralizer type and product number S-3 Centralizer
Centralizers installed on the following joints Shoe Jt. 10' up from Shoe Top Shoe Jt. Top Jt #4 10' 33' 162'
Other equipment (liner hanger, D.V. collar, etc.)

Cement Volume:
Caliper type _____. Caliper volume 75812 ft³ + excess over caliper _____ ft³ + float collar to shoe volume _____ ft³ + liner lap _____ ft³ + cement above liner _____ ft³ = _____ ft³ (Total Volume).

Cement:
Preflush—Water 5 bbls, other _____ Volume _____ bbls
First stage, type and additives Light Cement w/ 1/4# C/sx Flocele 320SX. Weight 12.8 lbs/gal, yield 1.15 ft³/sk, volume _____ sx. Pumpability 7 hours at 160 °F.
Second stage, type and additives Class H w/ 27% HRS 1/4# C/sx Flocele 250SX. Weight 15.5 lbs/gal, yield 1.15 ft³/sk, volume _____ sx. Pumpability _____ hours at _____ °F.

Cementing Procedure:
Rotate/reciprocate _____
Displacement rate Start 8 bbls flow to 560 bbls slow to 3 bbls flow
Percent returns during job 80%
Bumped plug at 3:45 AM/PM with 1000 psi. Bled back 1 bbl bbls. Hung csg with _____ lbs on slips.

Remarks:
Displaced 5½ bbls over Bled back 1 bbl
Did not Bump Plug. Set Float collar held.

Drilling Foreman Bill Harris
Date 7-2-80

SHELL OIL CO.
PM-62 (Rev. 8-72)

CASING AND CEMENTING

Field Altmont Well 1-15A3

Job: 13 3/8 " O.D. Casing/Liner, Ran to 235.00 feet (KB) on 6-12, 1980

Jts.	Wt.	Grade	Thread	New	Feet	From KB	To CHF
7	54.5	K55	8Rd Stc	New	287.02	CHF	

Casing Hardware:
Float shoe and collar type Guide Shoe Insert Float Valve
Centralizer type and product number 807 91066 Spring Centralizer
Centralizers installed on the following joints Top Shoe Jt. & Next Collar
Other equipment (liner hanger, D.V. collar, etc.)

Cement Volume:
Caliper type _____. Caliper volume 924 ft^3 + excess over caliper _____ ft^3 + float collar to shoe volume _____ ft^3 + liner lap _____ ft^3 + cement above liner _____ ft^3 = 924 ft^3 (Total Volume).

Cement:
Preflush-Water 10 bbls, other _____ Volume _____ bbls
First stage, type and additives 400 sx class H cement w/ 3% Calcium chloride. Weight 16.4 lbs/gal, yield 1.06 ft^3/sk, volume _____ sx. Pumpability _____ hours at _____ °F.
Second stage, type and additives _____ Weight _____ lbs/gal, yield _____ ft^3/sk, volume _____ sx, Pumpability _____ hours at _____ °F.

Cementing Procedure:
Rotate/reciprocate
Displacement rate 3 bbl per min
Percent returns during job 100 %
Bumped plug at _____ AM/PM with 300 psi. Bled back 3 bbls. Hung csg with _____ lbs on slips.

Remarks:

Good Returns on cement 36 bbls in Pit
Set casing on Bottom 285'

Drilling Foreman Bill Hunt
Date 6-12-80

Form OGC-1b

SUBMIT IN TRIPLICATE*
(Other instructions on reverse side)

STATE OF UTAH
DEPARTMENT OF NATURAL RESOURCES
DIVISION OF OIL, GAS, AND MINING

SUNDRY NOTICES AND REPORTS ON WELLS

(Do not use this form for proposals to drill or to deepen or plug back to a different reservoir. Use "APPLICATION FOR PERMIT—" for such proposals.)

1. OIL WELL [X] GAS WELL [ ] OTHER

2. NAME OF OPERATOR: Shell Oil Company

3. ADDRESS OF OPERATOR: P.O. Box 831 Houston, TX 77001 ATTN: P.G. Gelling Rm.# 6461 WCK

4. LOCATION OF WELL (Report location clearly and in accordance with any State requirements.* See also space 17 below.) At surface: 925' FNL & 1594' FEL Sec. 15

5. LEASE DESIGNATION AND SERIAL NO.: FEE

6. IF INDIAN, ALLOTTEE OR TRIBE NAME:

7. UNIT AGREEMENT NAME:

8. FARM OR LEASE NAME: Lopez

9. WELL NO.: 1-15A3

10. FIELD AND POOL, OR WILDCAT: Altamont

11. SEC., T., R., M., OR BLK. AND SURVEY OR AREA: T1S R3W

12. COUNTY OR PARISH: Duchesne

13. STATE: Utah

14. PERMIT NO.:

15. ELEVATIONS (Show whether DF, RT, GR, etc.): 6420' GL

16. Check Appropriate Box To Indicate Nature of Notice, Report, or Other Data

NOTICE OF INTENTION TO:				SUBSEQUENT REPORT OF:			
TEST WATER SHUT-OFF	[ ]	PULL OR ALTER CASING	[ ]	WATER SHUT-OFF	[ ]	REPAIRING WELL	[ ]
FRACTURE TREAT	[ ]	MULTIPLE COMPLETE	[ ]	FRACTURE TREATMENT	[ ]	ALTERING CASING	[ ]
SHOOT OR ACIDIZE	[ ]	ABANDON*	[ ]	SHOOTING OR ACIDIZING	[X]	ABANDONMENT*	[ ]
REPAIR WELL	[ ]	CHANGE PLANS	[ ]	(Other)			[ ]
(Other)			[ ]	(NOTE: Report results of multiple completion on Well Completion or Recompletion Report and Log form.)			

17. DESCRIBE PROPOSED OR COMPLETED OPERATIONS (Clearly state all pertinent details, and give pertinent dates, including estimated date of starting any proposed work. If well is directionally drilled, give subsurface locations and measured and true vertical depths for all markers and zones pertinent to this work.) *

SEE ATTACHED

APPROVED BY THE STATE OF UTAH DIVISION OF OIL, GAS, AND MINING
DATE: _____
BY: _____

18. I hereby certify that the foregoing is true and correct

SIGNED D.A. Lambis TITLE STAFF PROD. ENGINEER DATE 6-24-81

(This space for Federal or State office use)

APPROVED BY _____ TITLE _____ DATE _____
CONDITIONS OF APPROVAL, IF ANY:

*See Instructions on Reverse Side

ALTAMONT OPERATIONS
DAILY COMPLETIONS AND REMEDIALS REPORT
WELL HISTORY FOR WELL 345
ISSUED 04/08/81

WELL: TENNECO 1-15A3
LABEL: FIRST REPORT
AFE: AFE NO. 51257
FOREMAN: L.B. BRISTOL
RIG: W.O.W.S. NO. 20
OBJECTIVE: CLEAN OUT AND STIMULATE WELL
AUTH. AMNT: 70000
DAILY COST: 2750
CUM COST: 2750
DATE: 3-9-81
ACTIVITY: 3-9-81 STATUS: MOVE RIG TO LOCATION AND RIG UP
02 3-9-81 ACTIVITY: FIRST REPORT ON THIS LOCATION
03 AFE NO. 51257 PROVIDES FUNDS TO COMPLETE UPPER
04 WASATCH AND LOWER GREEN RIVER PERFORATE AND STIMULATE
05 WELL TO 15780 PBTD 15713 PERFORATING 13678 FT.=
06 15718 (411 HOLES) TOP OF FILL 15682 APPROX
07 209 BBLS OF GROSS PRODUCTION MOVE IN AND RIGGED
08 UP MOVED EQUIP TO LOCATION PUMP 200 BBLS PROD H20 DOWN
09 TBG REMOVED WELLHEAD TBG HANGER WAS GALLED TO
10 TBG PULLED THREADS OFF HAD TO SPEAR TBG TO RELEASE PKR
11 BAKER 7 IN. LOC-SET PKR PULL 3 STRANDS SDON
12 3-10-81 STATUS: PULL TBG OUT OF HOLE RUN IN AND MILL
13 5 IN. MODEL FA-1 PKR @ 13500

LABEL: =====
DAILY COST: 2350
CUM COST: 5100
DATE: 3-10-81
ACTIVITY: 3-10-81 STATUS: PULL TUBING AND RUN MILL IN HOLE.
02 3-10-81 ACTIVITY: PULL TUBING OUT OF WELL. RUN
03 MILL IN HOLE TO MILL MODEL FA-1 PACKER @ 13600.
04 OVERNIGHT SHUT IN WELL HAD 300 PSI TUBING AND
05 CASING 1 HOUR TO FLOW GAS OFF WELL.

LABEL: =====
DAILY COST: 4350
CUM COST: 9450
DATE: 3-11 AND 3-12-81
ACTIVITY: 3-11-81 STATUS: MILLED MODEL FA-1 PACKER.
02 3-11-81 ACTIVITY: RUN BAKER MILL IN HOLE.
03 MILLED UP MODEL FA-1 PACKER PULLED TUBING OUT

ALTAMONT OPERATIONS
DAILY COMPLETIONS AND REMEDIALS REPORT
WELL HISTORY FOR WELL 345
ISSUED 04/08/81

04 OF HOLE.
05 3-12-81 STATUS: OWP PERFORATE

LABEL: 810313
DAILY COST: 5350
CUM COST: 14800
DATE: 3-12-81
ACTIVITY: 3-12-81 STATUS: RIG UP LUBRICATOR TO PERFORATE
02 RUN CBL LOG
03 3-12-81 ACTIVITY: PULLED TBG OUT OF HOLE RIGGED
04 UP LUBRICATOR TO PERFORATE HAD TO RUN CEMENT BEND
05 LOG FROM 12300 FT. TO 11000 FT. WAIT ON TOOL FROM
06 VERNAL FOR 2 HRS 4 HRS TO RUN LOG
07 3-13-81 STATUS: PERFORATE 13008 TO 11768

LABEL: ----
DAILY COST: 29001
CUM COST: 59219
DATE: 3-13 AND 3-14 AND 3-16-81
ACTIVITY: 3-13-81 STATUS: PERFORATED 13004 TO 11768. RUN
02 TUBING - SET FULL BORE @ 11600 FT.
03 3-13-81 ACTIVITY: RUN IN PERFORATE 13004 TO 11768.
04 4 RUNS - 1 RUN WITH 3 1/8 IN. GUN 21 SHOTS -
05 3 RUNS WITH 4 IN. GUN 10 SHOTS EACH NO PRESSURE
06 AT THE END OF ALL RUNS. FLUID LEVEL CAME UP 200 FT.
07 FROM 1700. RUN TUBING IN WELL SET FULL BORE @
08 11600 FT.
09 3-14-81 STATUS: ACIDIZED - RUN RA LOG.
10 3-14-81 ACTIVITY: ACIDIZED STARTED -9:30 AM.
11 FINISHED-10:25 AM. 55 MIN TOTAL MAX PSI-8200
12 AVG PSI-6500 MIN PSI-5000 MAX RATE-17 BBLS. PER MIN.
13 AVG RATE-14 MIN RATE-9 ISP-300 5 MIN-200
14 10 MIN-100 15 MIN-0 TOTAL ACID-550 FLUSH-110
15 TOTAL FLUID-600 BBLS. MAX CSG-2500.
16 3-16-81 STATUS: RUN MANDRELS.

LABEL: ----
DAILY COST: 5350
CUM COST: 64569
DATE: 3-16 AND 3-17-81
ACTIVITY: 3-16-81 STATUS: RUN PACKER @ 12278 TO ACIDIZE LOWER
02 PERFS.

ALTAMONT OPERATIONS
DAILY COMPLETIONS AND REMEDIALS REPORT
WELL HISTORY FOR WELL 345
ISSUED 04/08/81

```
*03*          3-16-81 ACTIVITY: PULL TUBING AND 7 INCH FULLBORE
*04*          RERUN TUBING AND 5 INCH FULLBORE PACKER SET @ 12278.
*05*          RA LOG SHOWED NO ACID IN BOTTOM PERFS IN 5 INCH LINER.
*06*          3-17-81 STATUS: SET WELLHEAD ON AND ACIDIZE WITH
*07*          15000 GALLONS OF ACID.

LABEL:        -----
DAILY COST:   20232
CUM COST:     84801
DATE:         3-17 AND 3-18-81
ACTIVITY:     3-17-81 STATUS: SET WELLHEAD AND ACIDIZE LOWER PERFS.
*02*          3-17-81 ACTIVITY: SET WELLHEAD ON - RIG UP DOWELL
*03*          TO ACIDIZE 12278 TO 13100.   START-11:40  FINISHED-
*04*          1:11  TOTAL-1:31   MAX PRESS-6400  MIN PRESS-5800
*05*          AVG PRESS-6100  ISTP-4700  5 MIN-4450  10 MIN-4350
*06*          15 MIN-4200  20 MIN-4000   C.P.-0  500 BBLS. FLUID
*07*          DOWN BACK SIDE WOULD NOT TAKE PRESSURE.   MAX RATE-9
*08*          MIN RATE-4  AVG RATE-5   ACID-388  FLUSH-82  TOTAL-470
*09*          TOTAL BALLS  -77  1 EVERY 200 BBLS.
*10*          3-18-81 STATUS: RUN RA LOG - PULL TUBING - RUN
*11*          MANDRELS SET PACKER @ 11600.

LABEL:        -----
DAILY COST:   5050
CUM COST:     89851
DATE:         3-18-81
ACTIVITY:     3-18-81 STATUS: RIG UP - RUN RA LOG.
*02*          3-18-81 ACTIVITY: RIG UP - RUN RA LOG FROM 13100
*03*          TO 12272   LOG SHOWS GOOD ACID DISTRIBUTION.  OPEN
*04*          WELL TO PIT FLOW OF WATER OFF.  TURNED WELL DOWN
*05*          FLOWLINE OVERNIGHT    .  534 OIL BY OIL METER - 227 WATER.

LABEL:        -----
DAILY COST:   NONE
CUM COST:     89851
DATE:         3-19-81
ACTIVITY:     3-19-81  OIL-579  WATER-289  MCF-540  FTP-400
*02*          CP-0  INJ. GAS-0  CHOKE-40/64  18 HOURS.

LABEL:        -----
DAILY COST:   NONE
CUM COST:     89851
```

ALTAMONT OPERATIONS
DAILY COMPLETIONS AND REMEDIALS REPORT
WELL HISTORY FOR WELL 345
ISSUED 04/08/81

DATE: 3-20 AND 3-21 AND 3-22-81
ACTIVITY: 3-20-81 OIL-413 WATER-122 MCF-515 FTP-500
02 INJ. GAS-0 CHOKE-45/64 24 HOURS.
03 3-21-81 OIL-749 WATER-193 MCF-515 FTP-300
04 INJ. GAS-0 CHOKE-45/64 24 HOURS.
05 3-22-81 OIL-611 WATER-167 MCF-489 FTP-350
06 INJ. GAS-0 CHOKE-45/64 24 HOURS.

LABEL: -----
DAILY COST: NONE
CUM COST: 89851
DATE: 3-23-81
ACTIVITY: 3-23-81 OIL-544 WATER-125 MCF-463 FTP-350
02 INJ. GAS-0 CHOKE-45/64 24 HOURS.

LABEL: FINAL REPORT
DAILY COST: FINAL REPORT
CUM COST: 89851
DATE: 3-24 AND 3-25-81
ACTIVITY: 3-24-81 OIL-456 WATER-117 MCF-391 FTP-350
02 INJ. GAS-0 CHOKE-45/64 24 HOURS.
03 3-25-81 OIL-77 WATER-23 MCF-243 FTP-100
04 INJ. GAS-0 CHOKE-45/64 24 HOURS.

Form OGC-1b

SUBMIT IN TRIPLICATE*
(Other instructions on reverse side)

STATE OF UTAH
DEPARTMENT OF NATURAL RESOURCES
DIVISION OF OIL, GAS, AND MINING

SUNDRY NOTICES AND REPORTS ON WELLS

(Do not use this form for proposals to drill or to deepen or plug back to a different reservoir. Use "APPLICATION FOR PERMIT—" for such proposals.)

1. OIL WELL [X] GAS WELL [ ] OTHER

2. NAME OF OPERATOR: Shell Oil Company

3. ADDRESS OF OPERATOR: P.O. Box 831 Houston, Tx 77001 ATTN: P.G. Gelling Rm. # 6461 WCK

4. LOCATION OF WELL (Report location clearly and in accordance with any State requirements.* See also space 17 below.) At surface: 925' FNL & 1594' FEL Sec. 15

5. LEASE DESIGNATION AND SERIAL NO.: Fee

6. IF INDIAN, ALLOTTEE OR TRIBE NAME:

7. UNIT AGREEMENT NAME:

8. FARM OR LEASE NAME: Lopez

9. WELL NO.: 1-15A3

10. FIELD AND POOL, OR WILDCAT: Altamont

11. SEC., T., R., M., OR BLK. AND SURVEY OR AREA: T1S R3W

12. COUNTY OR PARISH: Duchesne

13. STATE: Utah

14. PERMIT NO.:

15. ELEVATIONS (Show whether DF, RT, GR, etc.): 6420' GL

16. Check Appropriate Box To Indicate Nature of Notice, Report, or Other Data

NOTICE OF INTENTION TO:				SUBSEQUENT REPORT OF:			
TEST WATER SHUT-OFF	[ ]	PULL OR ALTER CASING	[ ]	WATER SHUT-OFF	[ ]	REPAIRING WELL	[ ]
FRACTURE TREAT	[ ]	MULTIPLE COMPLETE	[ ]	FRACTURE TREATMENT	[ ]	ALTERING CASING	[ ]
SHOOT OR ACIDIZE	[ ]	ABANDON*	[ ]	SHOOTING OR ACIDIZING	[X]	ABANDONMENT*	[ ]
REPAIR WELL	[ ]	CHANGE PLANS	[ ]	(Other)			[ ]
(Other)			[ ]	(NOTE: Report results of multiple completion on Well Completion or Recompletion Report and Log form.)			

17. DESCRIBE PROPOSED OR COMPLETED OPERATIONS (Clearly state all pertinent details, and give pertinent dates, including estimated date of starting any proposed work. If well is directionally drilled, give subsurface locations and measured and true vertical depths for all markers and zones pertinent to this work.) *

SEE ATTACHED

APPROVED BY THE STATE OF UTAH DIVISION OF OIL, GAS, AND MINING
DATE: _____
BY: _____

18. I hereby certify that the foregoing is true and correct

SIGNED D.A. Lambis TITLE STAFF PROD. ENGINEER DATE 6-24-81

(This space for Federal or State office use)

APPROVED BY _____ TITLE _____ DATE _____
CONDITIONS OF APPROVAL, IF ANY:

*See Instructions on Reverse Side

BEST COPY
AVAILABLE

ALTAMONT OPERATIONS
DAILY COMPLETIONS AND REMEDIALS REPORT
WELL HISTORY FOR WELL 345
ISSUED 04/08/81

WELL: TENNECO 1-15A3
LABEL: FIRST REPORT
AFE: AFE NO. 51257
FOREMAN: L.B. BRISTOL
RIG: W.O.W.S. NO. 20
OBJECTIVE: CLEAN OUT AND STIMULATE WELL
AUTH. AMNT: 70000
DAILY COST: 2750
CUM COST: 2750
DATE: 3-9-81
ACTIVITY: 3-9-81 ATATUS: MOVE RIG TO LOCATION AND RIG UP
02 3-9-81 ACTIVITY: FIRST REPORT ON THIS LOCATION
03 AFE NO. 51257 PROVIDES FUNDS TO COMPLETE UPPER
04 WASATCH AND LOWER GREEN RIVER PERFORATE AND STIMULATE
05 WELL TO 15780 PBTD 15713 PERFORATING 13678 FT.-
06 15718 (411 HOLES) TOP OF FILL 15682 APPROX
07 209 BBLS OF GROSS PRODUCTION MOVE IN AND RIGGED
08 UP MOVED EQUIP TO LOCATION PUMP 200 BBLS PROD H20 DOWN
09 TBG REMOVED WELLHEAD TBG HANGER WAS GALLED TO
10 TBG PULLED THREADS OFF HAD TO SPEAR TBG TO RELEASE PKR
11 BACKER 7 IN. LOC-SET PKR PULL 3 STRANDS SDON
12 3-10-81 STATUS: PULL TBG OUT OF HOLE RUN IN AND MILL
13 5 IN. MODEL FA-1 PKR @ 13500

LABEL: =====
DAILY COST: 2350
CUM COST: 5100
DATE: 3-10-81
ACTIVITY: 3-10-81 STATUS: PULL TUBING AND RUN MILL IN HOLE.
02 3-10-81 ACTIVITY: PULL TUBING OUT OF WELL. RUN
03 MILL IN HOLE TO MILL MODEL FA-1 PACKER @ 13600.
04 OVERNIGHT SHUT IN WELL HAD 300 PSI TUBING AND
05 CASING 1 HOUR TO FLOW GAS OFF WELL.

LABEL: =====
DAILY COST: 4350
CUM COST: 9450
DATE: 3-11 AND 3-12-81
ACTIVITY: 3-11-81 STATUS: MILLED MODEL FA-1 PACKER.
02 3-11-81 ACTIVITY: RUN BAKER MILL IN HOLE.
03 MILLED UP MODEL FA-1 PACKER PULLED TUBING OUT

ALTAMONT OPERATIONS
DAILY COMPLETIONS AND REMEDIALS REPORT
WELL HISTORY FOR WELL 345
ISSUED 04/08/81

04 OF HOLE.
05 3-12-81 STATUS: OWP PERFORATE

LABEL: 810313
DAILY COST: 5350
CUM COST: 14800
DATE: 3-12-81
ACTIVITY: 3-12-81 STATUS: RIG UP LUBRICATOR TO PERFORATE
02 RUN CBL LOG
03 3-12-81 ACTIVITY: PULLED TBG OUT OF HOLE RIGGED
04 UP LUBRICATOR TO PERFORATE HAD TO RUN CEMENT BEND
05 LOG FROM 12300 FT. TO 11000 FT. WAIT ON TOOL FROM
06 VERNAL FOR 2 HRS 4 HRS TO RUN LOG
07 3-13-81 STATUS: PERFORATE 13008 TO 11768

LABEL: -----
DAILY COST: 29001
CUM COST: 59219
DATE: 3-13 AND 3-14 AND 3-16-81
ACTIVITY: 3-13-81 STATUS: PERFORATED 13004 TO 11768. RUN
02 TUBING - SET FULL BORE @ 11600 FT.
03 3-13-81 ACTIVITY: RUN IN PERFORATE 13004 TO 11768.
04 4 RUNS - 1 RUN WITH 3 1/8 IN. GUN 21 SHOTS -
05 3 RUNS WITH 4 IN. GUN 10 SHOTS EACH NO PRESSURE
06 AT THE END OF ALL RUNS. FLUID LEVEL CAME UP 200 FT.
07 FROM 1700. RUN TUBING IN WELL SET FULL BORE @
08 11600 FT.
09 3-14-81 STATUS: ACIDIZED - RUN RA LOG.
10 3-14-81 ACTIVITY: ACIDIZED STARTED -9:30 AM.
11 FINISHED-10:25 AM. 55 MIN TOTAL MAX PSI-8200
12 AVG PSI-6500 MIN PSI-5000 MAX RATE-17 BBLS. PER MIN.
13 AVG RATE-14 MIN RATE-9 ISP-300 5 MIN-200
14 10 MIN-100 15 MIN-0 TOTAL ACID-550 FLUSH-110
15 TOTAL FLUID-600 BBLS. MAX CSG-2500.
16 3-16-81 STATUS: RUN MANDRELS.

LABEL: -----
DAILY COST: 5350
CUM COST: 64569
DATE: 3-16 AND 3-17-81
ACTIVITY: 3-16-81 STATUS: RUN PACKER @ 12278 TO ACIDIZE LOWER
02 PERFS.

ALTAMONT OPERATIONS
DAILY COMPLETIONS AND REMEDIALS REPORT
WELL HISTORY FOR WELL 345
ISSUED 04/08/81

```
*03*          3-16-81 ACTIVITY: PULL TUBING AND 7 INCH FULLBORE
*04*          RERUN TUBING AND 5 INCH FULLBORE PACKER SET @ 12278.
*05*          RA LOG SHOWED NO ACID IN BOTTOM PERFS IN 5 INCH LINER.
*06*          3-17-81 STATUS: SET WELLHEAD ON AND ACIDIZE WITH
*07*          15000 GALLONS OF ACID.

LABEL:        -----
DAILY COST:   20232
CUM COST:     84801
DATE:         3-17 AND 3-18-81
ACTIVITY:     3-17-81 STATUS: SET WELLHEAD AND ACIDIZE LOWER PERFS.
*02*          3-17-81 ACTIVITY: SET WELLHEAD ON - RIG UP DOWELL
*03*          TO ACIDIZE 12278 TO 13100.   START-11:40  FINISHED-
*04*          1:11  TOTAL-1:31   MAX PRESS-6400  MIN PRESS-5800
*05*          AVG PRESS-6100  ISTP-4700  5 MIN-4450  10 MIN-4350
*06*          15 MIN-4200  20 MIN-4000   C.P.-0  600 BBLS. FLUID
*07*          DOWN BACK SIDE WOULD NOT TAKE PRESSURE.   MAX RATE-9
*08*          MIN RATE-4  AVG RATE-5   ACID-388  FLUSH-82  TOTAL-470
*09*          TOTAL BALLS  -77  1 EVERY 200 BBLS.
*10*          3-18-81 STATUS: RUN RA LOG - PULL TUBING - RUN
*11*          MANDRELS SET PACKER @ 11600.

LABEL:        -----
DAILY COST:   5050
CUM COST:     89851
DATE:         3-18-81
ACTIVITY:     3-18-81 STATUS: RIG UP - RUN RA LOG.
*02*          3-18-81 ACTIVITY: RIG UP - RUN RA LOG FROM 13100
*03*          TO 12272   LOG SHOWS GOOD ACID DISTRIBUTION.  OPEN
*04*          WELL TO PIT FLOW OF WATER OFF.  TURNED WELL DOWN
*05*          FLOWLINE OVERNIGHT    .  534 OIL BY OIL METER - 227 WATER.

LABEL:        -----
DAILY COST:   NONE
CUM COST:     89851
DATE:         3-19-81
ACTIVITY:     3-19-81  OIL-579  WATER-289  MCF-540  FTP-400
*02*          CP-0  INJ. GAS-0  CHOKE-40/64  18 HOURS.

LABEL:        -----
DAILY COST:   NONE
CUM COST:     89851
```

ALTAMONT OPERATIONS
DAILY COMPLETIONS AND REMEDIALS REPORT
WELL HISTORY FOR WELL 345
ISSUED 04/08/81

DATE: 3-20 AND 3-21 AND 3-22-81
ACTIVITY: 3-20-81 OIL-413 WATER-122 MCF-515 FTP-500
02 INJ. GAS-0 CHOKE-45/64 24 HOURS.
03 3-21-81 OIL-743 WATER-193 MCF-515 FTP-300
04 INJ. GAS-0 CHOKE-45/64 24 HOURS.
05 3-22-81 OIL-611 WATER-167 MCF-489 FTP-350
06 INJ. GAS-0 CHOKE-45/64 24 HOURS.

LABEL: =====
DAILY COST: NONE
CUM COST: 89851
DATE: 3-23-81
ACTIVITY: 3-23-81 OIL-544 WATER-125 MCF-463 FTP-350
02 INJ. GAS-0 CHOKE-45/64 24 HOURS.

LABEL: FINAL REPORT
DAILY COST: FINAL REPORT
CUM COST: 89851
DATE: 3-24 AND 3-25-81
ACTIVITY: 3-24-81 OIL-456 WATER-117 MCF-391 FTP-350
02 INJ. GAS-0 CHOKE-45/64 24 HOURS.
03 3-25-81 OIL-77 WATER-23 MCF-243 FTP-100
04 INJ. GAS-0 CHOKE-45/64 24 HOURS.

Form OGC-1b

SUBMIT IN TRIPLICATE*
(Other instructions on reverse side)

STATE OF UTAH
DEPARTMENT OF NATURAL RESOURCES
DIVISION OF OIL, GAS, AND MINING

SUNDRY NOTICES AND REPORTS ON WELLS

(Do not use this form for proposals to drill or to deepen or plug back to a different reservoir. Use "APPLICATION FOR PERMIT—" for such proposals.)

1. OIL WELL ☒ GAS WELL ☐ OTHER

2. NAME OF OPERATOR: Shell Oil Company

3. ADDRESS OF OPERATOR: P.O. Box 831 Houston Tx 77001 ATTN: P.G. Gelling RM. #6459 WCK

4. LOCATION OF WELL (Report location clearly and in accordance with any State requirements.* See also space 17 below.) At surface: 925' FNL + 1594' FEL Sec. 15

5. LEASE DESIGNATION AND SERIAL NO.: FEE

6. IF INDIAN, ALLOTTEE OR TRIBE NAME:

7. UNIT AGREEMENT NAME:

8. FARM OR LEASE NAME: LOPEZ

9. WELL NO.: 1-15A3

10. FIELD AND POOL, OR WILDCAT: ALTAMONT

11. SEC., T., R., M., OR BLK. AND SURVEY OR AREA: NW/4 NE/4 T1S R3W

12. COUNTY OR PARISH: DUCHESNE

13. STATE: UTAH

14. PERMIT NO.:

15. ELEVATIONS (Show whether DF, RT, GR, etc.): 6420' GL

16. **Check Appropriate Box To Indicate Nature of Notice, Report, or Other Data**

NOTICE OF INTENTION TO:				SUBSEQUENT REPORT OF:			
TEST WATER SHUT-OFF	☐	PULL OR ALTER CASING	☐	WATER SHUT-OFF	☐	REPAIRING WELL	☐
FRACTURE TREAT	☐	MULTIPLE COMPLETE	☐	FRACTURE TREATMENT	☐	ALTERING CASING	☐
SHOOT OR ACIDIZE	☐	ABANDON*	☐	SHOOTING OR ACIDIZING	☐	ABANDONMENT*	☐
REPAIR WELL	☐	CHANGE PLANS	☐	(Other)			☐
(Other)		CLEAN OUT	☒	(NOTE: Report results of multiple completion on Well Completion or Recompletion Report and Log form.)			

17. DESCRIBE PROPOSED OR COMPLETED OPERATIONS (Clearly state all pertinent details, and give pertinent dates, including estimated date of starting any proposed work. If well is directionally drilled, give subsurface locations and measured and true vertical depths for all markers and zones pertinent to this work.) *

SEE ATTACHED

APPROVED BY THE STATE OF UTAH DIVISION OF OIL, GAS, AND MINING
DATE: 7/29/82
BY: [signature]

18. I hereby certify that the foregoing is true and correct

SIGNED [signature] W. F. N. KELLDORF TITLE DIVISION PROD. ENGINEER DATE 7-20-82

(This space for Federal or State office use)

APPROVED BY _____ TITLE _____ DATE _____
CONDITIONS OF APPROVAL, IF ANY:

*See Instructions on Reverse Side

REMEDIAL PROGNOSIS
SHELL TENNECO 1-15A3
SECTION 15, T1S, R3W
ALTAMONT FIELD, UTAH

Pertinent Data: Shell's Share: 56.25%

Elevation (KB): 6422'
Elevation (GL): 6405'
TD: 15,780'
PBTD: 15,713'
Casing: 13-3/8", 54.5#, K-55 to 285'; 9-5/8", 40#, K-55 to 7705'; 7", 29#, JL-95 to 12,488'
Liner: 5", 18#, P-110; top at 12,265'; bottom at 15,790'
Tubing: 2-7/8", EUE, 6.5#, N-80 to 12,278'
Packer: 5", FA-1, Baker fullbore at 12,278'
Perforations: 11,768'-15,682' (552 holes)

Current Status: Averaging flowing 50 BOPD + 30 BWPD + 60 MCFPDG.

Objective: CO, move packer above top perfs and run gas lift design.

Procedure:

1. MIRU. Load hole with clean produced water. Remove tree. Install BOPE as per Attachment II.

2. Pull tubing and 5" fullbore packer at 12,278'.

3. CO 7" casing to 12,265' with a 6" bit and 7" scraper. CO 5" casing 12,265' to 15,713' with 4-1/8" bit + 5" scraper.

4. RIH with 7" fullbore packer to 11,700'± on 2-7/8" tubing with gas lift equipment. Gas lift installation to be run as per Attachment III.

5. Rig down and return well to production.

Recommended 4-20-82 Approved

Date

BJH:SJP
2/22/82

PRD4278[redacted]5425

4241 State Office Building Salt Lake City, Ut. 84114 ● 801-533-5771

MONTHLY OIL AND GAS PRODUCTION REPORT

Operator name and address: UTEX OIL CO.
% SHELL WESTERN E&P INC.

[redacted] Operator name change
PO BOX 576
HOUSTON TX 77001
ATTN: P.T. KENT, OIL ACCT.

Duchesne Uintah N1010

Utah Account No. N0840

Report Period (Month/Year) 8 / 8

Amended Report ☐

Well Name API Number	Entity	Location	Producing Zone	Days Oper	Production Volume Oil (BBL)	Gas (MSCF)	Water (BBL)
ELLSWORTH 1-20B4 4301330351	01900	02S 04W 20	WSTC	31	2018	6500	10631
LAWSON 1-28-A1 4301330358	01901	01S 01W 28	WSTC	31	1511	0	814
ELDER 1-13B2 4301330366	01905	02S 02W 13	WSTC	31	4170	3861	5105
TIMOTHY 1-08B1E 4304730215	01910	02S 01E 8	WSTC	31	3311	3471	610
UTE #1-32Z2 4301330379	01915	01N 02W 32	WSTC	25	1004	1919	1201
UTE TRIBAL 1-25A3 4301330370	01920	01S 03W 25	WSTC	31	514	731	88
UTE TRIBAL 1-31A2 4301330401	01925	01S 02W 31	WSTC	31	1030	1440	812
UTE 1-25B6 4301330439	01930	02S 06W 25	WSTC	12	718	1045	938
FARNSWORTH 2-07B4 4301330470	01935	02S 04W 7	WSTC	25	1946	2578	7700
UTE 1-36B6 4301330502	01940	02S 06W 36	WSTC	31	2900	2516	2348
[redacted]LTAMONT 1-15A3 [redacted]301330529	01945	01S 03W 15	WSTC	25	2964	4803	2755
UTE SMITH 1-30B5 4301330521	01950	02S 05W 30	WSTC	31	1723	2906	4379
SMITH 1-31B5 4301330577	01955	02S 05W 31	WSTC	28	1321	2235	5664
		TOTAL			25130	34005	43045

Comments (attach separate sheet if necessary)

I have reviewed this report and certify the information to be accurate and complete. Date 9-28-84

Authorized signature

Telephone

Form OGC-1b

SUBMIT IN TRIPLICATE*
(Other instructions on reverse side)

STATE OF UTAH
DEPARTMENT OF NATURAL RESOURCES
DIVISION OF OIL, GAS, AND MINING

SUNDRY NOTICES AND REPORTS ON WELLS

(Do not use this form for proposals to drill or to deepen or plug back to a different reservoir. Use "APPLICATION FOR PERMIT—" for such proposals.)

1. OIL WELL [X] GAS WELL [ ] OTHER

2. NAME OF OPERATOR: Shell Oil Company ATTN: B. T. Ellison 6486 WCK.

3. ADDRESS OF OPERATOR: P. O. Box 831 Houston, Tx. 77001

4. LOCATION OF WELL (Report location clearly and in accordance with any State requirements.* See also space 17 below.) At surface: 925' FNL & 1594' FEL Sec. 15

5. LEASE DESIGNATION AND SERIAL NO.: FEE

6. IF INDIAN, ALLOTTEE OR TRIBE NAME:

7. UNIT AGREEMENT NAME:

8. FARM OR LEASE NAME: Lopez

9. WELL NO.: 1-15A3

10. FIELD AND POOL, OR WILDCAT: Altamont

11. SEC., T., R., M., OR BLK. AND SURVEY OR AREA: Sec. 15 T1S R3W NW/4 NE/4

12. COUNTY OR PARISH: Duchesne

13. STATE: Utah

14. PERMIT NO.:

15. ELEVATIONS (Show whether DF, RT, GR, etc.): KB 6420'

16. **Check Appropriate Box To Indicate Nature of Notice, Report, or Other Data**

NOTICE OF INTENTION TO:				SUBSEQUENT REPORT OF:			
TEST WATER SHUT-OFF	[ ]	PULL OR ALTER CASING	[ ]	WATER SHUT-OFF	[ ]	REPAIRING WELL	[ ]
FRACTURE TREAT	[ ]	MULTIPLE COMPLETE	[ ]	FRACTURE TREATMENT	[ ]	ALTERING CASING	[ ]
SHOOT OR ACIDIZE	[ ]	ABANDON*	[ ]	SHOOTING OR ACIDIZING	[X]	ABANDONMENT*	[ ]
REPAIR WELL	[ ]	CHANGE PLANS	[ ]	(Other) Cleaned out			[ ]
(Other)			[ ]				

(NOTE: Report results of multiple completion on Well Completion or Recompletion Report and Log form.)

17. DESCRIBE PROPOSED OR COMPLETED OPERATIONS (Clearly state all pertinent details, and give pertinent dates, including estimated date of starting any proposed work. If well is directionally drilled, give subsurface locations and measured and true vertical depths for all markers and zones pertinent to this work.) *

COMPLETED OPERATIONS
(5/3-19/82)

Cleaned out 7" casing to 12,265' with bit and scraper. Cleaned out 5" casing 12,265'-15,605'. Spotted 2000 gallons 15% HCL during clean out. Returned well to production.

18. I hereby certify that the foregoing is true and correct

SIGNED Bart T. Ellison TITLE Div. Prod. Engr. DATE 3/2/83

(This space for Federal or State office use)

APPROVED BY _____ TITLE _____ DATE _____

CONDITIONS OF APPROVAL, IF ANY:

*See Instructions on Reverse Side

ALTAMONT OPERATIONS
DAILY COMPLETIONS AND REMEDIALS REPORT
ROCKY MOUNTAIN DIVISION
05/04/82

BEST COPY AVAILABLE

STATE: UTAH
FIELD: ALTAMONT

WELL: LOPEZ 1-15A3

LABEL: FIRST REPORT
WO NO.: 571187
FOREMAN: KENT RUST
RIG: WOW 22
AUTH. AMNT: 15000
DAILY COST: 4200
CUM. COST: 4200
TYPE OF JOB: REMEDIAL OIL AND GAS.
OBJECTIVE: CO AND RUN GAS LIFT MANDRELS.

DATE(S): 5-3 AND 5-4-82
PRESENT STATUS: 5-4-82 STATUS: CO 7 INCH.
ACTIVITY: 5-3-82 ACTIVITY: AFE 571187 PROVIDES FUNDS OF
02 15000 TO CO AND RUN GAS LIFT MANDRELS. MIRU
03 PUMPED 100 BBLS. OF HOT WTR. DOWN TBG. TO CLEAN
04 TBG. REMOVE WELLHEAD AND PUT ON BOPE. RELEASE
05 PKR. START OUT OF HOLE. PULLED 10 STDS. TBG. FULL
06 OF PARAFFIN. R.U. HOT OIL TRUCK. PUMPED HOT WTR. DOWN TBG
7* TO CLEAN UP. PULLED 110 STDS. S.D.O.N.
08 5-4-82 STATUS: CO 7 INCH.

DATE(S): 5-4 AND 5-5-82
PRESENT STATUS: 5-5-82 STATUS: CO 5 INCH.
ACTIVITY: 5-4-82 ACTIVITY: R.U. DELSCO. RIH W/
02 WAX CUTTING KNIFE. CUT WAX 4000 FT. PUMP HOT WTR.
03 DOWN TBG. WHILE CUTTING WAX. FINISH COMING OUT OF
04 HOLE W/TBG 4000 FT. RIH W/7 INCH CSG. SCRAPPER AND
05 6 1/8 INCH MILL. DID NOT TAG ANY SCALE. TAGGED
06 LINER TOP AT 12265 FT. S.O.O.H. W/7 INCH SCRAPPER
07 AND 6 1/8 INCH MILL. 45 STDS. S.D.O.N.
08 5-5-82 STATUS: CO 5 INCH.

DATE(S): 5-5-82
PRESENT STATUS: COME OUT OF HOLE WITH CASING SCRAPER.
ACTIVITY: FINISH COMING OUT OF HOLE WITH 7 INCH. CSG. SCRAPER
02 AND 6 1/8 IN. MILL. 155 STDS. RIH WITH 5 INCH.
03 CSG. SCRAPER AND 4 1/8 INCH. MILL. PICKED UP 27
04 JTS. TBG. OFF PIPE RACK. TAGGED SCALE AT 13103
05 FT. PULL UP OUT OF 5 INCH. LINER. SDON.
06 DATE 5-6-82 STATUS CO 5 INCH.

DATE(S): 5-6-82
PRESENT STATUS: TRY TO CIRCULATE WELL
ACTIVITY: TAG UP SCALE AT 13103 FT. RIG UP NOWSCO. PUMPED
02 1250 BBLS. WATER AT 9 BBLS. PER MIN. COULD NOT
03 GET CIRCULATION. RIG DOWN NOWSCO. POOH WITH 4 1/8
04 INCH. MILL AND 5 INCH. SCRAPER. START IN HOLE
05 WITH 4 1/8 INCH MILL AND MIRACLE TOOL. KELLY JOINT
06 SAFETY JOINT 2 CHECK VALVES. 110 STDS. SDON.
07 DATE 5-7-82 STATUS CO 5 INCH.

WELL: LOPEZ [redacted]15A3

LABEL: -----
NO.: 571187
REMAN: KENT RUST
RIG: WOW 22
AUTH. AMNT: 15000
DAILY COST: 5500
CUM. COST: 30900
TYPE OF JOB: REMEDIAL OIL AND GAS.
OBJECTIVE: CO AND RUN GAS LIFT MANDRELS.

DATE(S): 5-7 THRU 5-10-82
PRESENT STATUS: 5-10-82 STATUS: POOH AND RIH W/PROD. EQUIP.
ACTIVITY: 5-7-82 DAILY COST 4950 CUM.COST 21400
02 5-7-82 ACTIVITY: FINISH IN HOLE WITH 4 1/8 INCH
03 MILL AND MIRACLE TOOL. TAG SCALE AT 13103 FT. R.U.
04 POWER SWIVEL AND START MILLING. MILLED
05 UP 60 FT. OF SCALE. SCALE IS VERY HARD. PICKED UP
06 43 JTS. 2 7/8 INCH OFF PIPE RACKS. RIH TO 14427 FT.
07 PULL UP TO 13100 FT. AND SPOT 1000 GAL. 15% HCL
08 FLUSHED W/100 BBLS PRODUCED WTR. PULL UP OUT OF
09 LINER. 12260 FT. S.D.O.N.
10 5-8-82 COSTS GIVEN IN HEADING. STATUS: FINISH
11 CO 5 INCH. ACTIVITY: WELL HAD 500 LBS PSI.
12 PUMPED 400 BBL PROD. WTR. TO KILL WELL. HAD A HARD
13 TIME KILLING WELL. RIH TAGGED SCALE AT 15200 FT.
14 R.U. POWER SWIVEL. MILLED 30 FT. OF SCALE AND
15 FELL THROUGH. PICKED UP 38 JTS. 2 7/8
6* INCH OFF PIPE RACKS. TAGGED SCALE AGAIN AT 15605 FT.
17 STARTED MILLING COULD NOT MAKE ANY HOLE. MILL WAS
18 PLUGGED. SPOTTED 1000 GAL. 15% HCL FOLLOWED BY
19 100 BBL PROD. WTR. S.O.O.H. W/4 1/8 INCH MILL AND
20 MIRACLE TOOL. 56 STDS. S.D.O.N.
21 5-9-82 SUNDAY. 5-10-82 STATUS: FINISH COMING OUT
22 OF HOLE AND RIH WITH PRODUCTION EQUIP.
DATE(S): 5-10 AND 5-11-82
PRESENT STATUS: 5-11-82 STATUS: RIH W/PROD. EQUIP.
ACTIVITY: 5-10-82 ACTIVITY: 800 LBS ON WELL. PUMPED 300 BBLS
02 WTR TO KILL WELL. PULLED 20 STDS TBG.
03 WELL CAME BACK IN HAD TO PUMP 200 BBLS OF WTR TO
04 KILL WELL AGAIN. HAD A HARD TIME KEEPING WELL DEAD.
05 FINISH COMING OUT OF HOLE. WITH 4 1/8 INCH MILL AND
06 MIRACLE TOOL. LAID DOWN 130 JTS. 2 7/8 INCH. PUMPED
07 A TOTAL OF 600 BBLS WTR TO KEEP WELL DEAD. RIH W/
08 20 STDS OF KILL PIPE. S.D.O.N.
09 5-11-82 STATUS: RIH W/PROD. EQUIP.
DATE(S): 5-11-82
PRESENT STATUS: 5-11-82 STATUS: R.D. MOVE TO 1-31A2
ACTIVITY: 5-11-82 ACTIVITY: 700 LBS. PSI ON WELL. PUMPED
02 300 BBLS OF HOT PROD. WTR DOWN WELL TO KILL WELL
03 RIH W/TBG. 11 GAS LIFT MANDRELS AND 7 INCH GUIBERSON
04 PKR. SET PKR. AT 11709 FT. W/20000 LBS. TENSION
05 SET MANDRELS AT 3024 5262 6818 7816 8442 8975 9508
06 10041 10574 11107 11640 FT. REMOVE BOP PUT ON W.H. HOOK
07 UP FLOWLINE. R.D. MOVE TO 1-31A2 THIS WILL BE THE
08 FINAL RIG REPORT BUT I WILL BE PUTTING IN TEST DATA

WELL: LOPEZ [redacted]-15A3

LABEL: FINAL REPORT
ID NO.: 571187
REMAN: KENT RUST
RIG: WOW 22
AUTH. AMNT: 15000
CUM. COST: 34050
TYPE OF JOB: REMEDIAL OIL AND GAS.
OBJECTIVE: CO AND RUN GAS LIFT MANDRELS.

DATE(S): 5-13 THRU 5-19-82
PRESENT STATUS: 5-20-82 STATUS: WELL IS ON PRODUCTION.
LATEST TEST: SEE BELOW.
ACTIVITY: THE RIG MOVED ON THIS LOCATION ON 5-11-82.
02 THE FOLLOWING IS FOR 24 HRS. UNLESS
03 OTHERWISE STATED.
04 5-13-82 44 OIL 26 WTR 92 MCF GAS 97 INJECTION.
05 300 TBG PSI 7 INJ. CHOKE 40/64 TBG CHOKE.
06 5-14-82 82 OIL 28 WTR 50 MCF GAS 45 INJECTION
07 100 TBG PSI 7 INJ. CHOKE 40 TBG CHOKE.
08 5-15-82 75 OIL 344 WTR 405 MCF 373 INJ. 100 TBG
09 PSI. 7 INJ. CHOKE 40/64 TBG CHOKE.
10 5-16-82 21 OIL 350 WTR 250 MCF 162 INJ. 100
11 TBG PSI. 16.5 INJ. CHOKE 40/64 TBG CHOKE.
12 5-17-82 33 OIL 540 WTR 510 MCF 461 INJ. 100 TBG
13 PSI 10 INJ. CHOKE 40/64 TBG CHOKE.
14 5-18-82 20 OIL 513 WTR 575 MCF 540 INJ. 100 TBG
15 PSI 10 INJ CHOKE 40/64 TBG CHOKE.
16 5-19-82 20 OIL 646 WTR 748 MCF 658 INJ. 120 TBG
17 PSI. 12 INJ CHOKE 40/64 TBG CHOKE.

Form OGC-1b

SUBMIT IN TRIPLICATE (Other instructions on reverse side) 010924

STATE OF UTAH
DEPARTMENT OF NATURAL RESOURCES
DIVISION OF OIL, GAS, AND MINING

SUNDRY NOTICES AND REPORTS ON WELLS

(Do not use this form for proposals to drill or to deepen or plug back to a different reservoir. Use "APPLICATION FOR PERMIT—" for such proposals.)

1. OIL WELL [X] GAS WELL [ ] OTHER

2. NAME OF OPERATOR: ANR Limited Inc.

3. ADDRESS OF OPERATOR: P. O. Box 749, Denver, Colorado 80201-0749

4. LOCATION OF WELL (Report location clearly and in accordance with any State requirements.* See also space 17 below.) At surface: See attached list

RECEIVED DEC 31 1986 DIVISION OF OIL GAS & MINING

5. LEASE DESIGNATION AND SERIAL NO.:

6. IF INDIAN, ALLOTTEE OR TRIBE NAME:

7. UNIT AGREEMENT NAME:

8. FARM OR LEASE NAME: Ivw

9. WELL NO.: 1-15A3

10. FIELD AND POOL, OR WILDCAT:

11. SEC., T., R., M., OR BLK. AND SURVEY OR AREA: 1s 3w Sec. 15

12. COUNTY OR PARISH: Duchesne

13. STATE:

14. PERMIT NO.: 43-013-30529

15. ELEVATIONS (Show whether DF, RT, GR, etc.):

16. Check Appropriate Box To Indicate Nature of Notice, Report, or Other Data

NOTICE OF INTENTION TO:				SUBSEQUENT REPORT OF:			
TEST WATER SHUT-OFF	[ ]	PULL OR ALTER CASING	[ ]	WATER SHUT-OFF	[ ]	REPAIRING WELL	[ ]
FRACTURE TREAT	[ ]	MULTIPLE COMPLETE	[ ]	FRACTURE TREATMENT	[ ]	ALTERING CASING	[ ]
SHOOT OR ACIDIZE	[ ]	ABANDON*	[ ]	SHOOTING OR ACIDIZING	[ ]	ABANDONMENT*	[ ]
REPAIR WELL	[ ]	CHANGE PLANS	[ ]	(Other)			[ ]
(Other) Change Operator			[X]	(NOTE: Report results of multiple completion on Well Completion or Recompletion Report and Log form.)			

17. DESCRIBE PROPOSED OR COMPLETED OPERATIONS (Clearly state all pertinent details, and give pertinent dates, including estimated date of starting any proposed work. If well is directionally drilled, give subsurface locations and measured and true vertical depths for all markers and zones pertinent to this work.)*

ANR Limited has been elected successor Operator to Utex Oil Company on the oil wells described on the attached Exhibit "A".

18. I hereby certify that the foregoing is true and correct

SIGNED Jon K. Nelson TITLE Dist. Land Mgr. DATE 12/24/86

(This space for Federal or State office use)

APPROVED BY _____ TITLE _____ DATE _____

CONDITIONS OF APPROVAL, IF ANY:

*See Instructions on Reverse Side

Form OGC-1b

SUBMIT IN TRIPLICATE
(Other instructions on reverse side)

STATE OF UTAH
DEPARTMENT OF NATURAL RESOURCES
DIVISION OF OIL, GAS, AND MINING

SUNDRY NOTICES AND REPORTS ON WELLS

(Do not use this form for proposals to drill or to deepen or plug back to a different reservoir. Use "APPLICATION FOR PERMIT—" for such proposals.)

NOV 27 1987

DIVISION OF OIL, GAS & MINING

1. OIL WELL [X] GAS WELL [ ] OTHER

2. NAME OF OPERATOR: ANR Limited Inc.

3. ADDRESS OF OPERATOR: P.O. Box 749, Denver, CO 80201-0749

4. LOCATION OF WELL (Report location clearly and in accordance with any State requirements. See also space 17 below.) At surface: 1594' FEL, 925' FNL

5. LEASE DESIGNATION AND SERIAL NO.: Fee

6. IF INDIAN, ALLOTTEE OR TRIBE NAME: 120113

7. UNIT AGREEMENT NAME: Altamont

8. FARM OR LEASE NAME: Tew

9. WELL NO.: 1-15A3

10. FIELD AND POOL, OR WILDCAT: Altamont

11. SEC., T., R., M., OR BLK. AND SURVEY OR AREA: Sec. 15-T1S-R3W

14. PERMIT NO.: 43-013-30529

15. ELEVATIONS (Show whether DF, RT, GR, etc.): 6398' GL

12. COUNTY OR PARISH: Duchesne

13. STATE: Utah

16. Check Appropriate Box To Indicate Nature of Notice, Report, or Other Data

NOTICE OF INTENTION TO:				SUBSEQUENT REPORT OF:			
TEST WATER SHUT-OFF		PULL OR ALTER CASING		WATER SHUT-OFF	X	REPAIRING WELL	
FRACTURE TREAT		MULTIPLE COMPLETE		FRACTURE TREATMENT		ALTERING CASING	
SHOOT OR ACIDIZE		ABANDON*		SHOOTING OR ACIDIZING	X	ABANDONMENT*	
REPAIR WELL		CHANGE PLANS		(Other)			
(Other)							

(NOTE: Report results of multiple completion on Well Completion or Recompletion Report and Log form.)

17. DESCRIBE PROPOSED OR COMPLETED OPERATIONS (Clearly state all pertinent details, and give pertinent dates, including estimated date of starting any proposed work. If well is directionally drilled, give subsurface locations and measured and true vertical depths for all markers and zones pertinent to this work.)*

7-03-87 Set CIBP @ 12,350'. Cmt. squeeze perfs (11,768-12,225') w/300 sx. CL G cmt.

7-16-87 Drilled out CIBP.

7-18-87 Perf Wasatch 12,309-13,669' w/3 SPF.
Acidized Wasatch perfs 12,309-13,669' w/25,000 gallons 15% HCL w/additives.
Well back on production.

18. I hereby certify that the foregoing is true and correct

SIGNED Eileen Dey TITLE Regulatory Analyst DATE 11/23/87

(This space for Federal or State office use)

APPROVED BY _____ TITLE _____ DATE _____

CONDITIONS OF APPROVAL, IF ANY:

*See Instructions on Reverse Side

Form 3160-5
(November 1983)
(Formerly 9-331)

UNITED STATES
DEPARTMENT OF THE INTERIOR
BUREAU OF LAND MANAGEMENT

SUBMIT IN TRIPLICATE*
(Other instructions on reverse side)

Form approved.
Budget Bureau No. 1004-0135
Expires August 31, 1985

SUNDRY NOTICES AND REPORTS ON WELLS

(Do not use this form for proposals to drill or to deepen or plug back to a different reservoir. Use "APPLICATION FOR PERMIT—" for such proposals.)

RECEIVED
DEC 3 1987
DIVISION OF
OIL, GAS & MINING

5. LEASE DESIGNATION AND SERIAL NO.: Fee POW-WSTC

6. IF INDIAN, ALLOTTEE OR TRIBE NAME: 120810

1. OIL WELL [X] GAS WELL [ ] OTHER

7. UNIT AGREEMENT NAME:

2. NAME OF OPERATOR: ANR Limited Inc.

8. FARM OR LEASE NAME: Tew

3. ADDRESS OF OPERATOR: P. O. Box 749, Denver, Colorado 80201-0749

9. WELL NO.: 1-15A3

4. LOCATION OF WELL (Report location clearly and in accordance with any State requirements.* See also space 17 below.) At surface: 1594' FEL & 925' FNL

10. FIELD AND POOL, OR WILDCAT: Altamont

11. SEC., T., R., M., OR BLK. AND SURVEY OR AREA: Sec. 15-T1S-R3W

14. PERMIT NO.: 43-013-30529

15. ELEVATIONS (Show whether DF, RT, GR, etc.): 6420' GL

12. COUNTY OR PARISH: Duchesne

13. STATE: Utah

16. **Check Appropriate Box To Indicate Nature of Notice, Report, or Other Data**

NOTICE OF INTENTION TO:

TEST WATER SHUT-OFF	[ ]	PULL OR ALTER CASING	[ ]
FRACTURE TREAT	[ ]	MULTIPLE COMPLETE	[ ]
SHOOT OR ACIDIZE	[ ]	ABANDON*	[ ]
REPAIR WELL	[ ]	CHANGE PLANS	[ ]
(Other)			[ ]

SUBSEQUENT REPORT OF:

WATER SHUT-OFF	[ ]	REPAIRING WELL	[ ]
FRACTURE TREATMENT	[ ]	ALTERING CASING	[ ]
SHOOTING OR ACIDIZING	[ ]	ABANDONMENT*	[ ]
(Other) Convert to rod pump			[X]

(NOTE: Report results of multiple completion on Well Completion or Recompletion Report and Log form.)

17. DESCRIBE PROPOSED OR COMPLETED OPERATIONS (Clearly state all pertinent details, and give pertinent dates, including estimated date of starting any proposed work. If well is directionally drilled, give subsurface locations and measured and true vertical depths for all markers and zones pertinent to this work.)*

Convert from gas lift to rod pump 10-9-87

18. I hereby certify that the foregoing is true and correct

SIGNED Brenda W. Swank (Brenda W. Swank) TITLE Assoc. Regulatory Analyst DATE 11-30-87

(This space for Federal or State office use)

APPROVED BY _____ TITLE _____ DATE _____

CONDITIONS OF APPROVAL, IF ANY:

*See Instructions on Reverse Side

Title 18 U.S.C. Section 1001, makes it a crime for any person knowingly and willfully to make to any department or agency of the United States any false, fictitious or fraudulent statements or representations as to any matter within its jurisdiction.

UTAH
NATURAL RESOURCES
Oil, Gas & Mining

355 West North Temple, 3 Triad Center, Suite 350, Salt Lake City, Ut
84180-1203. (801-538-5340)

DOGM 56-64-2
an equal opportunity employe

MONTHLY OIL AND GAS PRODUCTION REPORT

Operator name and address:

ANR LIMITED INC./COASTAL
P O BOX 749
DENVER CO 80201 0749
ATTN: RANDY WAHL

Utah Account No. N0235

Report Period (Month/Year) 11 / 87

Amended Report ☐

Well Name API Number Entity Location	Producing Zone	Days Oper	Production Volume Oil (BBL)	Gas (MSCF)	Water (BBL)
ELDER 1-13B2 4301330366 01905 02S 02W 13	GR-WS				
UTE #1-32Z2 4301330379 01915 01N 02W 32	WSTC				
UTE TRIBAL #2-32Z2 4301331110 01916 01N 02W 32	WSTC				
UTE TRIBAL 1-25A3 4301330370 01920 01S 03W 25	GRRV		(Conf.)		
UTE TRIBAL 1-31A2 4301330401 01925 01S 02W 31	WSTC				
UTE 1-25B6 4[illegible]330439 01930 02S 06W 25	WSTC				
FARNSWORTH 2-07B4 4301330470 01935 02S 04W 7	WSTC				
UTE 1-36B6 4301330502 01940 02S 06W 36	WSTC				
TEW 1-15A3 4301330529 01945 01S 03W 15	WSTC				
UTE SMTH 1-30B5 4301330521 01950 02S 05W 30	WSTC				
SMITH 1-31B5 4301330577 01955 02S 05W 31	WSTC				
MILES 1-35A4 4301330029 01965 01S 04W 35	GRRV				
MILES #2-35A4 4301331087 01966 01S 04W 35	WSTC				
		TOTAL			

Comments (attach separate sheet if necessary)

I have reviewed this report and certify the information to be accurate and complete. Date

Authorized signature

Telephone

PLEASE COMPLETE FORMS IN BLACK INK

ANR

ANR Production Company
a subsidiary of The Coastal Corporation

012712

RECEIVED
JAN 25 1988
DIVISION OF
OIL, GAS & MINING

January 19, 1988

Natural Resources
Oil, Gas & Mining
3 Triad Center, Suite 350
Salt Lake City, Utah 84180-1203

Attention: Ms. Lisha Romero

N0235

This letter includes the information you requested on January 12, 1988 concerning the recent merger of ANR Limited, Inc. into ANR Production Company. Effective December 31, 1987 (December, 1987 Production), ANR Limited, Inc. merged into ANR Production Company; and henceforth, will continue operations as ANR Production Company.

N0675

ANR Production Company will begin reporting and remitting the Utah Conservation and Occupation Taxes effective December, 1987 production for leases previously reported by ANR Limited, Inc. (Utah Account No. N-7245). ANR Production Company will use the new Utah Account No. N-0675, as assigned by the State of Utah.

Please contact me at (713) 877-6167 if I can answer any questions on this matter.

Very truly yours,

Roger W. Sparks

Roger W. Sparks
Manager, Crude Revenue Accounting

The computer shows the ANR Limited wells listed under account no. N0235.
DTS
1-26-88

CC: AWS

CTE:mmw

Lisha,
I don't see any problem w/this. I gave a copy to Arlene so she could check on the bond situation. She didn't think this would affect their bond as the bond is set up for Coastal and its subsidiaries (ANR, etc.) No Entity Number changes are necessary. DTS 1-26-88

Coastal Tower, Nine Greenway Plaza, Houston, Texas 77046-0995 • (713) 877-1400

Form OGC-1b

SUBMIT IN TRIPLICATE (Other instructions on reverse side)

STATE OF UTAH
DEPARTMENT OF NATURAL RESOURCES
DIVISION OF OIL, GAS, AND MINING

SUNDRY NOTICES AND REPORTS ON WELLS

(Do not use this form for proposals to drill or to deepen or plug back to a different reservoir. Use "APPLICATION FOR PERMIT—" for such proposals.)

RECEIVED AUG 22 1988 DIVISION OF OIL, GAS & MINING

1. OIL WELL [X] GAS WELL [ ] OTHER

2. NAME OF OPERATOR: ANR Production Company

3. ADDRESS OF OPERATOR: P. O. Box 749, Denver, Colorado 80201-0749

4. LOCATION OF WELL (Report location clearly and in accordance with any State requirements.* See also space 17 below.) At surface: 1,594' FEL, 925' FNL

14. PERMIT NO.: 43-013-30529

15. ELEVATIONS (Show whether DF, RT, GR, etc.): 6,398' GL

5. LEASE DESIGNATION AND SERIAL NO.: Fee

6. IF INDIAN, ALLOTTEE OR TRIBE NAME:

7. UNIT AGREEMENT NAME:

8. FARM OR LEASE NAME: Tew

9. WELL NO.: 1-15A3

10. FIELD AND POOL, OR WILDCAT: Altamont

11. SEC., T., R., M., OR BLK. AND SURVEY OR AREA: Section 15, T1S-R3W

12. COUNTY OR PARISH: Duchesne

13. STATE: Utah

16. Check Appropriate Box To Indicate Nature of Notice, Report, or Other Data

NOTICE OF INTENTION TO:				SUBSEQUENT REPORT OF:			
TEST WATER SHUT-OFF	[ ]	PULL OR ALTER CASING	[ ]	WATER SHUT-OFF	[X]	REPAIRING WELL	[ ]
FRACTURE TREAT	[ ]	MULTIPLE COMPLETE	[ ]	FRACTURE TREATMENT	[ ]	ALTERING CASING	[ ]
SHOOT OR ACIDIZE	[ ]	ABANDON*	[ ]	SHOOTING OR ACIDIZING	[ ]	ABANDONMENT*	[ ]
REPAIR WELL	[ ]	CHANGE PLANS	[ ]	(Other)			[ ]
(Other)			[ ]	(NOTE: Report results of multiple completion on Well Completion or Recompletion Report and Log form.)			

17. DESCRIBE PROPOSED OR COMPLETED OPERATIONS (Clearly state all pertinent details, and give pertinent dates, including estimated date of starting any proposed work. If well is directionally drilled, give subsurface locations and measured and true vertical depths for all markers and zones pertinent to this work.)*

7/4-13/88: MIRU. POOH w/rods and tubing. Cleaned out 5" liner.

Set CIBP @ 12,286'.

Squeezed perf interval for water shut-off @ 11,768-12,225' w/400 sx. CL "G" cement to 2,500#.

Cleaned out well to PBTD @ 15,605'.

RIH w/production string, rods and pump.

Return well to production.

18. I hereby certify that the foregoing is true and correct

SIGNED Eileen Danni Dey (Eileen Danni Dey) TITLE Regulatory Analyst DATE 8/17/88

(This space for Federal or State office use)

APPROVED BY _____ TITLE _____ DATE _____

CONDITIONS OF APPROVAL, IF ANY:

*See Instructions on Reverse Side

Form OGC-1b

SUBMIT IN TRIPLICATE
(Other instructions on reverse side)

STATE OF UTAH
DEPARTMENT OF NATURAL RESOURCES
DIVISION OF OIL, GAS, AND MINING

SUNDRY NOTICES AND REPORTS ON WELLS

(Do not use this form for proposals to drill or to deepen or plug back to a different reservoir. Use "APPLICATION FOR PERMIT—" for such proposals.)

RECEIVED AUG 21 1989 DIVISION OF OIL, GAS & MINING

5. LEASE DESIGNATION AND SERIAL NO.: Fee

6. IF INDIAN, ALLOTTEE OR TRIBE NAME:

1. OIL WELL [X] GAS WELL [ ] OTHER

7. UNIT AGREEMENT NAME:

2. NAME OF OPERATOR: ANR Production Company

8. FARM OR LEASE NAME: Tew

3. ADDRESS OF OPERATOR: P.O. Box 749, Denver, CO 80201-0749

9. WELL NO.: 1-15A3

4. LOCATION OF WELL (Report location clearly and in accordance with any State requirements.* See also space 17 below.) At surface: 1594' FEL & 925' FNL Section 15

10. FIELD AND POOL, OR WILDCAT: Altamont

11. SEC., T., R., M., OR BLK. AND SURVEY OR AREA: Section 15, T1S, R3W

14. PERMIT NO.: 43-013-30529

15. ELEVATIONS (Show whether DF, RT, GR, etc.): 6398' GL

12. COUNTY OR PARISH: Duchesne

13. STATE: UT

16. **Check Appropriate Box To Indicate Nature of Notice, Report, or Other Data**

NOTICE OF INTENTION TO:

TEST WATER SHUT-OFF	[ ]	PULL OR ALTER CASING	[ ]
FRACTURE TREAT	[ ]	MULTIPLE COMPLETE	[ ]
SHOOT OR ACIDIZE	[X]	ABANDON*	[ ]
REPAIR WELL	[ ]	CHANGE PLANS	[ ]
(Other)			[ ]

SUBSEQUENT REPORT OF:

WATER SHUT-OFF	[ ]	REPAIRING WELL	[ ]
FRACTURE TREATMENT	[ ]	ALTERING CASING	[ ]
SHOOTING OR ACIDIZING	[ ]	ABANDONMENT*	[ ]
(Other)			[ ]

(NOTE: Report results of multiple completion on Well Completion or Recompletion Report and Log form.)

17. DESCRIBE PROPOSED OR COMPLETED OPERATIONS (Clearly state all pertinent details, and give pertinent dates, including estimated date of starting any proposed work. If well is directionally drilled, give subsurface locations and measured and true vertical depths for all markers and zones pertinent to this work.)*

See attached intended procedure to cleanout wellbore and acid stimulate the above referenced well.

OIL AND GAS	
DRN	RJF
1- JRB ✓	GLH
DTS	SLS
2-TAS	
3- MICROFILM ✓	
4- FILE	

18. I hereby certify that the foregoing is true and correct

SIGNED Brenda W. Swank TITLE Regulatory Analyst DATE August 18, 1989

(This space for Federal or State office use)

APPROVED BY _____ TITLE _____ DATE _____

CONDITIONS OF APPROVAL, IF ANY:

APPROVED BY THE STATE OF UTAH DIVISION OF OIL, GAS, AND MINING
DATE: 8-28-89
BY: [signature]

*See Instructions on Reverse Side

WELLBORE CLEANOUT & ACID STIMULATION

Tew #1-15A3
Section 15, T1S, R3W
Duchesne County, Utah

WELL DATA:

Location:	1594' FEL and 925' FNL
Elevation:	GL: 6405' KB: 6427'
TD:	15,792' PBTD: 15,605'
Casing:	13-3/8" 54.5# K-55 @ 285', cmt w/400 sxs 9-5/8" 40.0# K-55 @ 7705', cmt w/370 sxs 7" 29.0# JL-95 @ 12,488', cmt w/1075 sxs 5" 18# P-110 @ 12,265'-15,792', cmt w/575 sxs
Tubing:	2-7/8" N-80 8rd 6.5#/ft @ 10,387' TAC @ 10,510'; PSN @ 10,409'
Rods:	3275' - 1", 3375' - 7/8", 3350' - 3/4", 325' - 1-5/8" sinker bars, Norris 78's. 2-1/2" x 1-3/4" x 24 x 26 RHBM Highland pump

Tubular Properties:

Description	ID	Drift	Capacity	Burst	Collapse
7" 29# JL-95	6.184"	6.059"	.0371 B/F	9690 psi	7820 psi
5" 18# P-110	4.276"	4.151"	.0177 B/F	13,940 psi	13,450 psi
2-7/8" 6.5# N-80	2.441"	2.347"	.00579 B/F	10,570 psi	11,160 psi

WELL HISTORY

November 1980	Perf 13,678'-15,682', 3 SPF, 399 total holes Acidized with 40,300 gals 7-1/2% HCl
January 1981	Initiated gas lift
March 1981	Perf 11,768'-13,008', 3 SPF, 153 total holes Acidize perfs 11,768'-13,008' w/23,100 gals 7-1/2% HCl Acidize perfs 12,278'-13,678' w/16,300 gals 7-1/2% HCl
May 1982	CO wellbore. Spot 2000 gals 15% HCl across perfs below 13,100'. Encountered scale from 13,103'-15,605'.
February 1983	CO csg to 15,190'. Isolate water zone with packers.
July 1987	Mill out straddle pkrs. Cmt squeeze perfs from 11,768'-12,225' w/1200 sxs cmt (90 holes). Perf Wasatch 12,309'-13,669', 3 SPF, 297 total holes. Acidize perfs from 12,154'-15,682' w/25,000 gals 15% HCl.
October 1987	Install beam pump
July 1988	Cmt squeeze perfs from 11,768'-12,225' w/400 sxs cmt (90 holes)

PRESENT STATUS

Shut in uneconomical to produce. Last produced July 25, 1989: 23 BO, 0 BW, 0 MCF.

PRESENT WELLBORE SCHEMATIC
TEW # 1-15A3
AS OF 7/28/89

S.C. Prutch

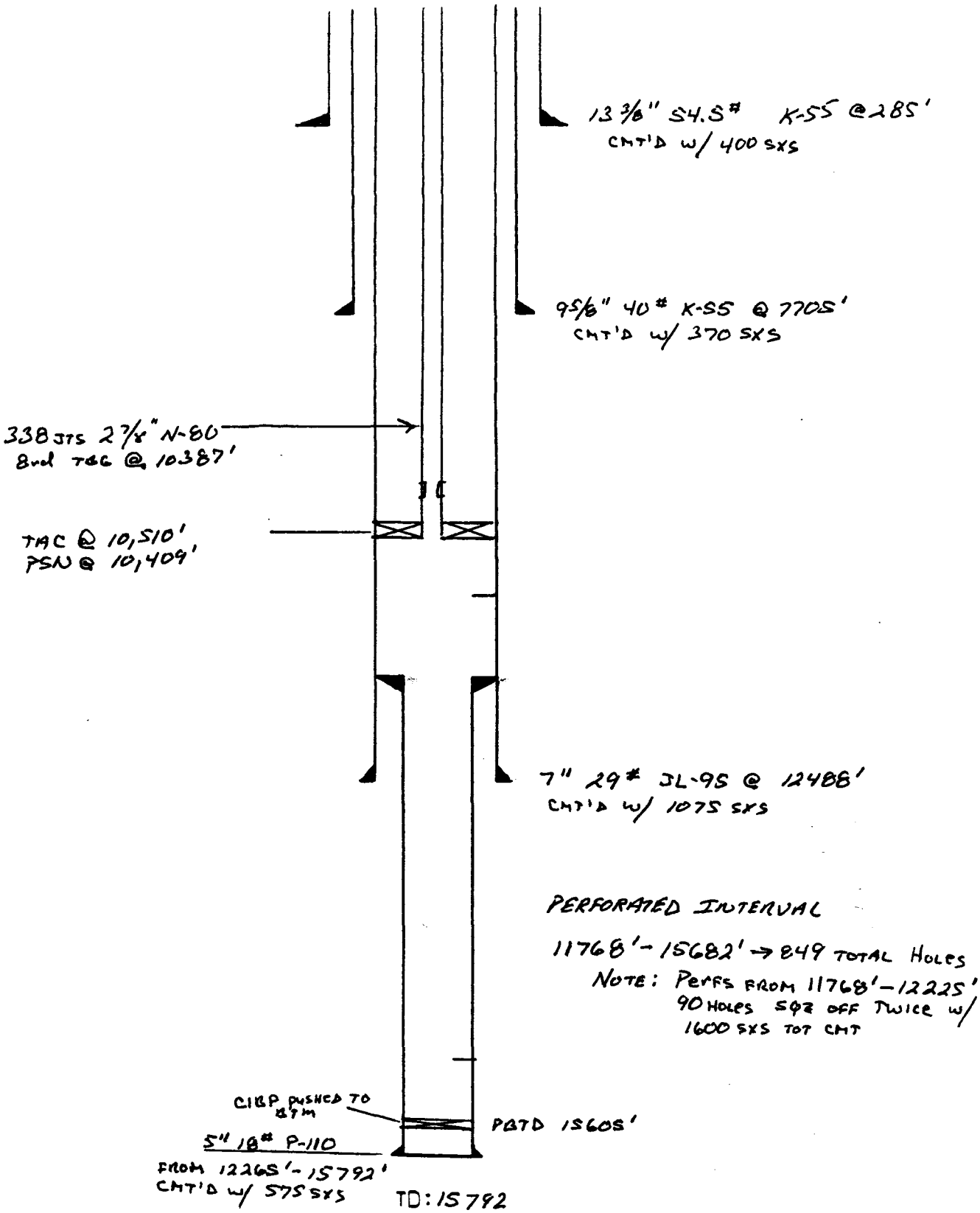

PROCEDURE

1. MIRU service rig. Kill well, NU BOPE. POOH w/rods and tbg.

2. PU & RIH w/mill and CO tools. CO 5" liner to PBTD @ +/-15,605'.

3. PU & RIH w/3 jts 2-7/8" IJ Nu-Lock N-80 6.5#/ft, 5" treating pkr, 2 jts 2-7/8" IJ Nu-Lock N-80 6.5#/ft, +/-12,200' 3-1/2" N-80 8rd tbg, and 1 jt 3-1/2" CS hydril. Hydrotest in hole to 8500 psi. Set pkr @ +/-12,290'.

4. Acidize perforations from 12,308'-15,682', 759 holes, w/23,000 gals 15% HCl with additives and 1000 1.1 sg ball sealers. Note: Acid job should be designed to include:
   A) All fluids to be heated to 150° F.
   B) Precede acid w/250 bbls 3% KCl wtr w/10 gals per 1000 scale inhibitor and 500 gals Xylene.
   C) All water to contain 3% KCl.
   D) Acidize with 4 stages of 5750 gal each and 3 diverter stages of 1500 gals gelled saltwater with 1#/gal each of Benzoic acid flakes and rock salt.
   E) Tag 1st acid stage w/solid Scandium, 2nd acid stage w/solid Irridium and 3 & 4 acid stage w/solid Antimony.

5. Flow/swab back acid load.

6. Run Atlas Wireline Prism Log.

7. Kill well w/3% KCl wtr. Run production equipment and return well on line.

FORM 9

STATE OF UTAH
DIVISION OF OIL, GAS AND MINING

SUNDRY NOTICES AND REPORTS ON WELLS

(Do not use this form for proposals to drill or to deepen or plug back to a different reservoir. Use "APPLICATION FOR PERMIT—" for such proposals.)

JAN 11 1990
DIVISION OF OIL, GAS & MINING

1. OIL WELL [X] GAS WELL [ ] OTHER

2. NAME OF OPERATOR: ANR Production Company

3. ADDRESS OF OPERATOR: P. O. Box 749, Denver, Colorado 80201-0749

4. LOCATION OF WELL (Report location clearly and in accordance with any State requirements. See also space 17 below.)
At surface
At proposed prod. zone: 1594' FEL & 925' FNL Section 15

5. LEASE DESIGNATION & SERIAL NO.: Fee

6. IF INDIAN, ALLOTTEE OR TRIBE NAME: N/A

7. UNIT AGREEMENT NAME: N/A

8. FARM OR LEASE NAME: Tew

9. WELL NO.: 1-15A3

10. FIELD AND POOL, OR WILDCAT: Altamont

11. SEC., T., R., M., OR BLK. AND SURVEY OR AREA: Section 15, T1S-R3W

14. API NO.: 43-013-30529

15. ELEVATIONS (Show whether DF, RT, GR, etc.): 6399' GL

12. COUNTY: Duchesne

13. STATE: Utah

16. Check Appropriate Box To Indicate Nature of Notice, Report or Other Data

NOTICE OF INTENTION TO:

TEST WATER SHUT-OFF	[ ]	PULL OR ALTER CASING	[ ]
FRACTURE TREAT	[ ]	MULTIPLE COMPLETE	[ ]
SHOOT OR ACIDIZE	[ ]	ABANDON	[ ]
REPAIR WELL	[ ]	CHANGE PLANS	[ ]
(Other)			

APPROX. DATE WORK WILL START _____

SUBSEQUENT REPORT OF:

WATER SHUT-OFF	[ ]	REPAIRING WELL	[ ]
FRACTURE TREATMENT	[ ]	ALTERING CASING	[ ]
SHOOTING OR ACIDIZING	[X]	ABANDONMENT*	[ ]
(Other)			[ ]

(Note: Report results of multiple completion on Well Completion or Recompletion Report and Log form.)

DATE OF COMPLETION 12-8-89

17. DESCRIBE PROPOSED OR COMPLETED OPERATIONS (Clearly state all pertinent details, and give pertinent dates, including estimated date of starting any proposed work. If well is directionally drilled, give subsurface locations and measured and true vertical depths for all markers and zones pertinent to this work.)

* Must be accompanied by a cement verification report.

See attached chronological report to clean out wellbore and acidize the above referenced well.

OIL AND GAS
DRN
JRB
DTS SLS
1-TAS
2- MICROFILM
3- FILE

18. I hereby certify that the foregoing is true and correct

SIGNED Timothy F. Sciba TITLE Administrative Manager DATE 1/8/90

(This space for Federal or State office use)

APPROVED BY _____ TITLE _____ DATE _____

CONDITIONS OF APPROVAL, IF ANY:

See Instructions On Reverse Side

(3/89)

THE COASTAL CORPORATION
PRODUCTION REPORT

CHRONOLOGICAL HISTORY

TEW #1-15A3 (CO & ACDZ)
ALTAMONT/BLUEBELL FIELD
DUCHESNE COUNTY, UTAH
WI: 36.9800% ANR AFE: 62822
ATD: 15,792' (WASATCH)
CSG: 5" LINER @ 12,265'-15,792'
PERFS: 12,308'-15,682'
CWC(M$): $98.8

11/15/89 POOH w/rod pmp BHA. MIRU. Pmp 100 BW dwn csg. Flush rods w/70 BW. POOH w/86 tapered rod string & pump. ND WH, NU BOPS. Rel TAC.
DC: $2,204 TC: $2,204

11/16/89 CO 5" liner. POOH w/rod pmp BHA on 2-7/8" tbg. Start RIH w/4-1/8" mill & CO tools on 2-7/8" x 2-3/8" tbg.
DC: $2,595 TC: $4,799

11/17/89 POOH w/CO tools. Fin RIH w/4-1/8" mill & CO tools on 2-3/8" x 2-7/8" tbg. Tag fill @ 15,560'. CO 5" liner to 15,574'. Tools sticking. Start POOH.
DC: $4,701 TC: $9,500

11/20/89 Fin RIH w/5" pkr. POOH w/4-1/8" mill & CO tools on 2-3/8" x 2-7/8" tbg. Start RIH w/5" pkr & 2-7/8" tailpipe on 3-1/2" tbg.
DC: $5,115 TC: $14,615

11/21/89 Prep to acdz Wasatch form. Fin RIH w/5" pkr on 3-1/2" tbg. Set pkr @ 12,283'. Fill csg w/250 BW. Press tst csg to 1500#. OK. Bled off.
DC: $3,985 TC: $18,600

11/22-26/89 SI. WO acid job 11/27/89.

11/27/89 Fin POOH w/3-1/2" tbg. Start acid job. Pmp 500 gals xylene & 212 bbls 3% KCl. Started to communicate. SD. Rls pkr. Start POOH.
DC: $6,600 TC: $25,200

11/28/89 Fin RIH w/3-1/2" tbg. PU & RIH w/18 jts 2-7/8" tbg, 7" hd pkr, 3-1/2" tbg.
DC: $2,973 TC: $28,173

11/29/89 Swabbing load. Fin RIH w/3-1/2" tbg. Set pkr @ 11,697' (tailpipe @ 12,252'). Acdz open perfs from 12,308'-15,682' w/23,000 gals 15% HCl w/add, 1000 - 1.1 SG ball sealers & benzoic acid flakes/rock salt diverter, MTP 8500 psi, mx rate 32 BPM, ATP 7500 psi, avg rate 27 BPM. ISIP 1200 psi. Good diversion. Run RA log. RU to swab.
DC: $69,180 TC: $97,353

11/30/89 Fin LD tbg. Start swabbing. On 2nd run sd line parted. Tried 3rd run. Sd line prtd again. Rls pkr & start 3-1/2" workstring.
DC: $2,879 TC: $100,232

12/1/89 Place well on rod pump prod. Fin POOH w/7" pkr on 3-1/2" tbg. RIH w/TAC & rod pmp BHA on 2-7/8" tbg. Set TAC @ 10,513'. ND BOPS. Land tbg w/20,000# tension. NU WH. Pmp 70 BW dwn tbg. RIH w/2-1/2" x 1-1/2" x 26' RHBC pump dn 86 tapered rod string. Space out. Press test tbg to 1000#. OK. Hang well off.
DC: $4,510 TC: $104,742

12/2/89 Pmpd 24 BO, 246 BW, 34 MCF/10 hrs.
DC: $614 TC: $105,356

12/3/89 Pmpd 166 BO, 280 BW, 43 MCF.

12/4/89 Pmpd 123 BO, 283 BW, 14 MCF.

12/5/89 Pmpd 120 BO, 318 BW, 14 MCF.

12/6/89 Pmpd 114 BO, 244 BW, 71 MCF.

12/7/89 Pmpd 100 BO, 342 BW, 66 MCF.

12/8/89 Pmpd 106 BO, 345 BW, 71 MCF.
Before on rod pmp avg'd: 90 BOPD, 230 BWPD, 5 MCFPD. Final report.

Form 9

STATE OF UTAH
DEPARTMENT OF NATURAL RESOURCES
DIVISION OF OIL, GAS AND MINING

6. Lease Designation and Serial Number: Fee

7. Indian Allottee or Tribe Name: N/A

8. Unit or Communitization Agreement: N/A

SUNDRY NOTICES AND REPORTS ON WELLS

Do not use this form for proposals to drill new wells, deepen existing wells, or to reenter plugged and abandoned wells. Use APPLICATION FOR PERMIT— for such proposals.

1. Type of Well: [X] Oil Well [ ] Gas Well [ ] Other (specify)

9. Well Name and Number: Tew 1-15A3

2. Name of Operator: ANR Production Company

10. API Well Number: 43-013-30529

3. Address of Operator: P.O. Box 749, Denver, CO 80201-0749

4. Telephone Number: (303) 573-4476

11. Field and Pool, or Wildcat: Altamont

5. Location of Well

Footage : 1594' FEL & 925' FNL
QQ, Sec, T., R., M. : NW/NE Section 15, T1S-R3W
County : Duchesne
State : UTAH

12. CHECK APPROPRIATE BOXES TO INDICATE NATURE OF NOTICE, REPORT, OR OTHER DATA

NOTICE OF INTENT (Submit in Duplicate)

- [ ] Abandonment
- [ ] Casing Repair
- [ ] Change of Plans
- [ ] Conversion to Injection
- [ ] Fracture Treat
- [ ] Multiple Completion
- [ ] New Construction
- [ ] Pull or Alter Casing
- [ ] Recompletion
- [ ] Shoot or Acidize
- [ ] Vent or Flare
- [ ] Water Shut-Off
- [X] Other Install 5" tieback liner

Approximate Date Work Will Start: July 1, 1992

SUBSEQUENT REPORT (Submit Original Form Only)

- [ ] Abandonment *
- [ ] Casing Repair
- [ ] Change of Plans
- [ ] Conversion to Injection
- [ ] Fracture Treat
- [ ] Other
- [ ] New Construction
- [ ] Pull or Alter Casing
- [ ] Shoot or Acidize
- [ ] Vent or Flare
- [ ] Water Shut-Off

Date of Work Completion

Report results of Multiple Completions and Recompletions to different reservoirs on WELL COMPLETION OR RECOMPLETION AND LOG form.

* Must be accompanied by a cement verification report.

13. DESCRIBE PROPOSED OR COMPLETED OPERATIONS (Clearly state all pertinent details, and give pertinent dates. If well is directionally drilled, give subsurface locations and measured and true vertical depths for all markers and zones pertinent to this work.)

Please see the attached procedure to install a 5" tieback liner in the above-referenced well.

APPROVED BY THE STATE OF UTAH DIVISION OF OIL, GAS, AND MINING
DATE: 6-12-92
BY: [signature]

RECEIVED
JUN 11 1992
DIVISION OF OIL GAS & MINING

14. I hereby certify that the foregoing is true and correct

Name & Signature: Eileen Danni Dey
Title: Regulatory Analyst
Date: 6/8/92

(State Use Only)

(8/90)

See Instructions on Reverse Side

WELLBORE CLEANOUT AND
INSTALL TIEBACK LINER

Tew #1-15A3
Section 15, T1S, R3W
Duchesne County, Utah

WELL DATA

Location:	1594' FEL and 925' FNL
Elevation:	GL: 6405' KB: 6427'
TD:	15,792' PBTD: 15,560'
Casing:	13-3/8" 54.5# K-55 @ 285', cmt w/400 sxs
	9-5/8" 40.0# K-55 @ 7705', cmt w/370 sxs
	7" 29.0# JL-95 @ 12,488', cmt w/1075 sxs
	5" 18# P-110 @ 12,265'-15,792', cmt w/575 sxs
Tubing:	2-7/8" N-80 8rd 6.5#/ft @ 10,387'
	TAC @ 10,510'; PSN @ 10,409'
Rods:	3275' - 1", 3375' - 7/8", 3350' - 3/4", 325' - 1-5/8" sinker bars, Norris 78's. 2-1/2" x 1-3/4" x 24 x 26 RHBM Highland pump

Tubular Properties:

Description	ID	Drift	Capacity	Burst	Collapse
7" 29# JL-95	6.184"	6.059"	.0371 B/F	9690 psi	7820 psi
5" 18# P-110	4.276"	4.151"	.0177 B/F	13940 psi	13450 psi
2-7/8" 6.5# N-80	2.441"	2.347"	.00579 B/F	10570 psi	11160 psi

WELL HISTORY

November 1980	Perf 13,678'-15,682', 3 SPF, 399 total holes Acidized with 40,300 gals 7½% HCl
January 1981	Initiated gas lift
March 1981	Perf 11,768'-13,008', 3 SPF, 153 total holes Acidize perfs 11,768'-13,008' w/23,100 gals 7½% HCl Acidize perfs 12,278'-13,678' w/16,300 gals 7½% HCl
May 1982	CO wellbore. Spot 2000 gals 15% HCl across perfs below 13,100'. Encountered scale from 13,103'-15,605'.
February 1983	CO csg to 15,190'. Isolate water zone with packers.
July 1987	Mill out straddle pkrs. Cmt squeeze perfs from 11,768'-12,225' w/1200 sxs cmt (90 holes). Perf Wasatch 12,309'-13,699', 3 SPF, 297 total holes. Acidize perfs from 12,154'-15,682' w/25,000 gals 15% HCl.
October 1987	Install beam pump
July 1988	Cmt squeeze perfs from 11,768'-12,225' w/400 sxs cmt (90 holes).
November 1989	Acidize perforations from 12,308'-15,682', 759 holes w/23,000 gals 15% HCl. Production Before Workover: 0 Production After Workover: 106 BOPD, 345 BWPD and 71 MCFPD

PRESENT STATUS

Shut in uneconomical to produce. On 56 day production cycle to maintain lease. Last produced April 5, 1992, 16 BO, 471 BW and 25 MCF.

PROCEDURE

1. MIRU service rig. Kill well, NU BOPE. POOH w/rods and tbg.

2. PU and RIH w/4-1/8" mill and CO tools. CO 5" liner to PBTD @ ±15,574'. POOH.

3. RU wireline service company. RIH w/5" 18# wireline set RBP and set at ±12,350'. Spot 2 sxs of sand on top.

4. PU & RIH w/mill to dress up 5" liner top @ 12,265'. POOH.

5. PU and RIH w/5" tieback seal nipple, 5" 18# P-110 LT&C csg and 5" x 7" liner hanger on 3½" 10.3# workstring. Liner top should be @ ±11,500'.

6. Set liner hanger and cmt liner from 12,265' to 11,500' per the attached Western Company prognosis (or equivalent). Release from liner hanger and POH.

7. Fill hole and press test csg to 2000 psi. Finish POOH. PU & RIH w/4-1/8" bladed mill. DO cmt. Drill through 5" tieback @ 12,265'. Press test tieback and liner to 2000 psi. CO 5" liner to RBP @ 12,350'. POOH.

8. PU & RIH w/retrieving head. Release RBP @ 12,350'. POOH.

9. RIH w/production equipment and return online.

SCP:cam

PRESENT WELLBORE SCHEMATIC

Tew # 1-15A3

AS OF 5/12/92

S.C. Prutch

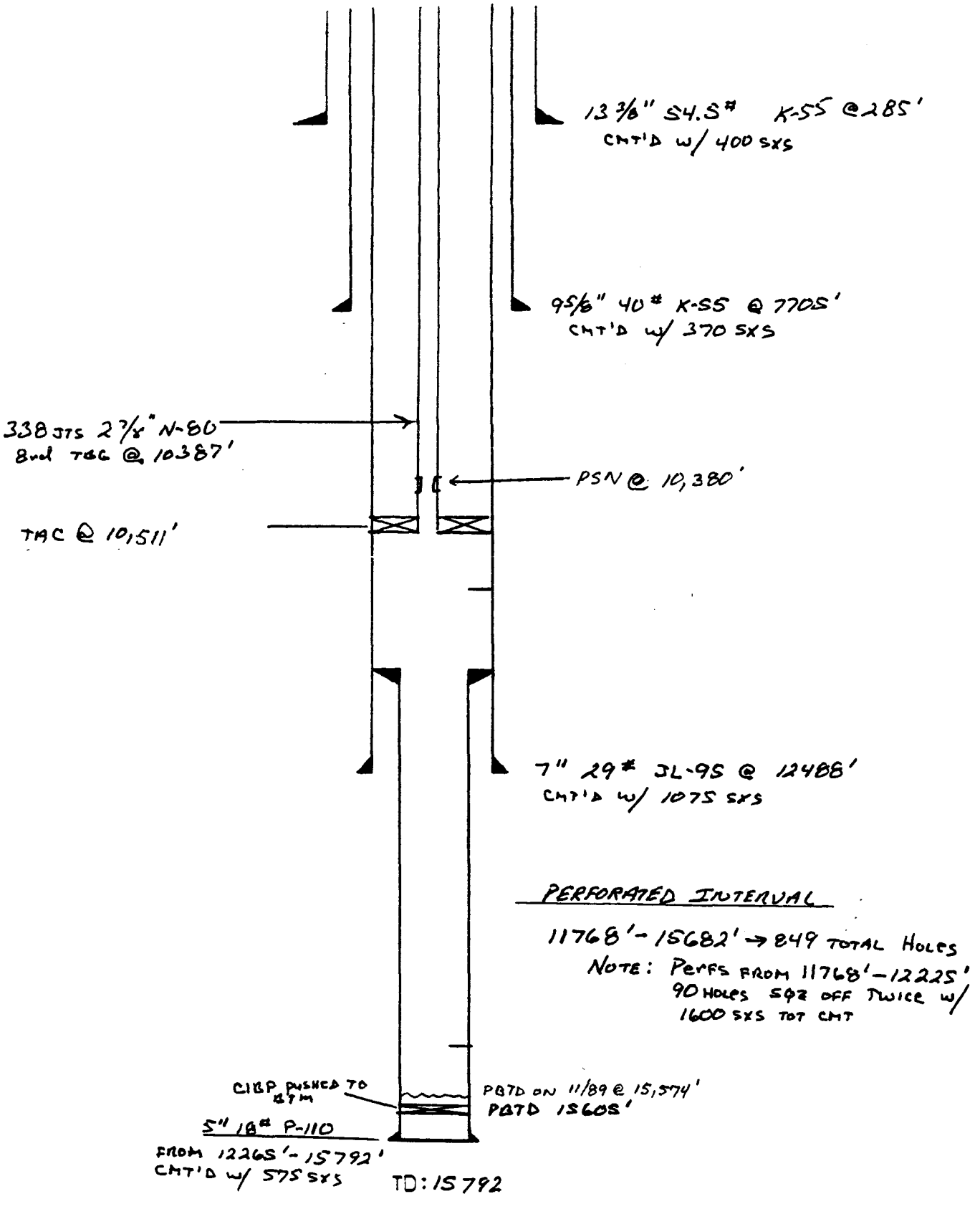

Form 9

STATE OF UTAH
DEPARTMENT OF NATURAL RESOURCES
DIVISION OF OIL, GAS AND MINING

6. Lease Designation and Serial Number: Fee

7. Indian Allottee or Tribe Name: N/A

8. Unit or Communitization Agreement: N/A

SUNDRY NOTICES AND REPORTS ON WELLS

Do not use this form for proposals to drill new wells, deepen existing wells, or to reenter plugged and abandoned wells.
Use APPLICATION FOR PERMIT — for such proposals.

1. Type of Well: [X] Oil Well [ ] Gas Well [ ] Other (specify)

2. Name of Operator: ANR Production Company

3. Address of Operator: P.O. Box 749 Denver, CO 80201-0749

4. Telephone Number: (303) 573-4476

9. Well Name and Number: Tew 1-15A3

10. API Well Number: 43-013-30529

11. Field and Pool, or Wildcat: Altamont

5. Location of Well
Footage : 1215' FEL & 1053' FNL
QQ, Sec, T., R., M. : NE/NE Section 15, T1S, R3W
County : Duchesne
State : UTAH

12. CHECK APPROPRIATE BOXES TO INDICATE NATURE OF NOTICE, REPORT, OR OTHER DATA

NOTICE OF INTENT (Submit in Duplicate)

- [ ] Abandonment
- [ ] Casing Repair
- [ ] Change of Plans
- [ ] Conversion to Injection
- [ ] Fracture Treat
- [ ] Multiple Completion
- [ ] Other
- [ ] New Construction
- [ ] Pull or Alter Casing
- [ ] Recompletion
- [ ] Shoot or Acidize
- [ ] Vent or Flare
- [ ] Water Shut-Off

Approximate Date Work Will Start _____

SUBSEQUENT REPORT (Submit Original Form Only)

- [ ] Abandonment *
- [ ] Casing Repair
- [ ] Change of Plans
- [ ] Conversion to Injection
- [ ] Fracture Treat
- [X] Other Install Tie Back Liner
- [ ] New Construction
- [ ] Pull or Alter Casing
- [ ] Shoot or Acidize
- [ ] Vent or Flare
- [ ] Water Shut-Off

Date of Work Completion 8/29/92

Report results of Multiple Completions and Recompletions to different reservoirs on WELL COMPLETION OR RECOMPLETION AND LOG form.
* Must be accompanied by a cement verification report.

13. DESCRIBE PROPOSED OR COMPLETED OPERATIONS (Clearly state all pertinent details, and give pertinent dates. If well is directionally drilled, give subsurface locations and measured and true vertical depths for all markers and zones pertinent to this work.)

Please see the attached chronological history for the installation of a 5" tieback liner in the above-referenced well.

RECEIVED
SEP 28 1992
DIVISION OF
OIL GAS & MINING

I hereby certify that the foregoing is true and correct

Name & Signature: Eileen Danni Dey

Title: Regulatory Analyst Date: 9/24/92

(State Use Only)

See Instructions on Reverse Side

THE COASTAL CORPORATION
PRODUCTION REPORT

CHRONOLOGICAL HISTORY

TEW #1-15A3 (INSTALL 5" TIEBACK LINER)
ALTAMONT/BLUEBELL FIELD
DUCHESNE COUNTY, UTAH
WI: 49.23000% ANR AFE: 64117
TD: 15,792' PBTD: 15,560'
CSG: 5" LINER @ 12,265'-15,792'
PERFS: 11,768'-15,682'
CWC(M$): 86.5

8/10/92 POOH w/tbg. MIRU rig & rod equip. Unseat pump. RU hot oiler & flush rods w/50 bbls 250 deg wtr. POOH w/rods, wt bars & pump. RD rod equip. NU BOPE. Released tbg anchor. POOH w/16 stds 2-7/8" tbg. SWI & SDFN @ 5:00 p.m.
DC: $3,077 TC: $3,077

8/11/92 Repair rig, removing main drum from rig. RIH w/6-1/8" drag bit, 7" csg scraper & 169 stds 2-7/8" tbg. PU & RIH w/60 jts 2-7/8" tbg, tagged 5" LT @ 12,268'. POOH w/13 stds 2-7/8" tbg. SWI & SDFN @ 5:00 p.m.
DC: $2,649 TC: $5,726

8/12/92 RIH w/tbg, CO 5" liner. Repair rig. POOH w/tbg, bit & scraper. Changed equip over to 2-3/8". Tally, PU & RIH w/4-1/8" mill, Graco 5" CO tool & 107 jts 2-3/8" tbg. Changed equip over to 2-7/8". RIH w/143 stds 2-7/8" tbg, mill @ 12,219'. SWI & SDFN @ 6:00 p.m.
DC: $2,564 TC: $8,290

8/13/92 RIH w/mill to polish LT. RIH w/54 stds 2-7/8" tbg, tagged fill @ 15,568'. CO fill to PBTD @ 15,574'. POOH w/24 stds 2-7/8" tbg. Broke cross member on rig. Replaced cross member. POOH w/2-7/8" tbg. Changed equip over to 2-3/8". POOH w/2-3/8" tbg, CO tool & mill. RU Cutters. RIH and set 5" CIBP @ 12,280'. POOH & RD Cutters. SWI & SDFN @ 6:00 p.m.
DC: $7,752 TC: $16,042

8/14/92 PU & RIH w/5" liner. RIH w/4-7/8" milling tool on 2-7/8" tbg, tagged 5" TOL @ 12,268'. Dressed up 5" liner tieback receptacle. POOH w/tbg & mill. (Mill showed receptacle ID 4.500+.) SDFN.
DC: $4,836 TC: $20,878

8/17/92 Finish POOH w/tbg, prep to set CICR in liner. RU Westates Casing Equip. PU & RIH w/6" shoe, 21 jts 5" 18# P-110 csg & hanger assembly on 2-7/8" tbg. Set liner hanger @ 11,439' w/6000# setting on btm @ 12,265'. POOH w/2-7/8" tbg. SDFN.
DC: $12,160 TC: $33,038

8/18/92 POOH w/tbg. POOH w/61 stds 2-7/8" tbg and liner setting tool. RU WL. RIH w/5" cmt retainer @ set @ 12,194'. RIH w/stinger & 198 stds 2-7/8" tbg. Sting into retainer @ 12,194'. RU Halliburton. Pump 20 BFW ahead. Mix & pump 100 sx (27 bbls 15.9#) cmt slurry & followed w/69 BW. Stung out of retainer & left 1-1/2 bbls (5 sx) cmt on top of retainer. POOH w/116 stds 2-7/8" tbg. SDFN.
DC: $12,722 TC: $45,760

8/19/92 POOH w/tbg & 6-1/8" bit, prep to squeeze TOL. POOH w/2-7/8" tbg & stinger. RIH w/6-1/8" drag bit & 186 stds 2-7/8" tbg. Tagged LT @ 11,439' and pumped 445 BW to fill hole & est inj rate of 4 BPM @ 0 psi. POOH w/84 stds tbg. SDFN.
DC: $3,199 TC: $48,959

8/20/92 POOH w/tbg & pkr. POOH w/tbg & bit. RIH w/7" pkr & 347 jts 2-7/8" tbg. Set pkr @ 10,678'. Fill & PT csg to 2000 psi, lost 2000 psi in 5 mins. POOH, looking for leak. SDFN.
DC: $5,112 TC: $54,071

THE COASTAL CORPORATION
PRODUCTION REPORT

CHRONOLOGICAL HISTORY

TEW #1-15A3 (INSTALL 5" TIEBACK LINER)
ALTAMONT/BLUEBELL FIELD
DUCHESNE COUNTY, UTAH
WI: 49.23000% ANR AFE: 64117

8/21/92 POOH w/tbg. POOH w/tbg & pkr. Found leak in 284th jt of tbg. Test WH, void to 3500 psi, held. RIH w/MSOT 7" HD pkr & tbg, set pkr @ 10,678'. Fill & test csg to 2000 psi, held. RU Halliburton. Pmpd 100 sx cmt w/additives. Squeezed to 2000 psi. Reversed out w/93 BW. Pressure squeeze back up to 2000 psi. SWI. Est cmt @ 11,339'. RD Halliburton. SDFN @ 6:00 p.m.
DC: $14,289 TC: $68,360

8/24/92 POOH w/tbg & bit. Bled 2000 psi off tbg & 1000 psi off csg. Rlsd pkr. POOH w/tbg & pkr. RIH w/6-1/8" drag bit & tbg, tagged cmt @ 11,264'. Cleaned out cmt to 5" LT @ 11,439'. Circ hole clean. PT squeeze to 2000 psi, held. Bled pressure off. RD drlg equip. POOH. SWI & SDFN @ 7:00 p.m.
DC: $3,998 TC: $72,358

8/25/92 Milling on retainer. POOH w/tbg & 6-1/8" bit. RIH w/4-1/8" mill. Changed equip. Tagged cmt @ 12,161'. RU drlg equip. CO cmt to cmt retainer @ 12,194'. Milled 1' of retainer. Circ hole clean. SWI & SDFN @ 7:00 p.m.
DC: $3,966 TC: $76,324

8/26/92 Milling on CIBP. Milled out retainer. Cleaned out solid cmt to 12,248' & cmt stringer to 12,268'. Circ hole clean. PT csg to 2000 psi, held. Displaced hole w/clean filtered prod wtr. RIH to CIBP @ 12,280'. Milled CIBP loose & pushed down to 12,328'. CIBP hung up unable to get deeper. Circ hole clean. SWI & SDFN @ 7:00 p.m.
DC: $3,823 TC: $80,147

8/27/92 Milling out cmt. Milled CIBP loose. Cleaned out cmt from 12,328'-12,763'. Circ hole clean. SWI & SDFN.
DC: $3,638 TC: $83,785

8/28/92 RIH w/2-3/8" tbg. Cleaned out cmt to 12,804', fell free. RIH w/tbg, tagged cmt @ 14,057'. Cleaned out cmt 14,389'. Circ hole clean. POOH w/2-7/8" tbg & 4-1/8" mill. SDFN.
DC: $2,962 TC: $86,747

8/29/92 WO new AFE to reperf & acidize. RIH w/38 stds 2-3/8" tbg. POOH, LD 76 jts 2-3/8" tbg. SDFN. Drop from report until further activity.
DC: $6,700 TC: $93,447

Form 3

STATE OF UTAH
DEPARTMENT OF NATURAL RESOURCES
DIVISION OF OIL, GAS AND MINING

6. Lease Designation and Serial Number: Fee

7. Indian Allottee or Tribe Name: N/A

8. Unit or Communitization Agreement: N/A

SUNDRY NOTICES AND REPORTS ON WELLS

Do not use this form for proposals to drill new wells, deepen existing wells, or to reenter plugged and abandoned wells.
Use APPLICATION FOR PERMIT — for such proposals.

1. Type of Well: [XX] Oil Well [ ] Gas Well [ ] Other (specify)

9. Well Name and Number: Tew #1-15A3

2. Name of Operator: ANR Production Company

10. API Well Number: 43-013-30529

3. Address of Operator: P.O. Box 749 Denver, CO 80201-0749

4. Telephone Number: (303) 573-4476

11. Field and Pool, or Wildcat: Altamont

5. Location of Well

Footage : 1215' FEL & 1053' FNL
QQ, Sec, T., R., M. : NE/NE Section 15, T1S, R3W
County : Duchesne
State : UTAH

12. CHECK APPROPRIATE BOXES TO INDICATE NATURE OF NOTICE, REPORT, OR OTHER DATA

NOTICE OF INTENT (Submit in Duplicate)

- [ ] Abandonment
- [ ] Casing Repair
- [ ] Change of Plans
- [ ] Conversion to Injection
- [ ] Fracture Treat
- [ ] Multiple Completion
- [ ] Other
- [ ] New Construction
- [ ] Pull or Alter Casing
- [ ] Recompletion
- [ ] Shoot or Acidize
- [ ] Vent or Flare
- [ ] Water Shut-Off

Approximate Date Work Will Start _____

SUBSEQUENT REPORT (Submit Original Form Only)

- [ ] Abandonment *
- [ ] Casing Repair
- [ ] Change of Plans
- [ ] Conversion to Injection
- [ ] Fracture Treat
- [ ] Other
- [ ] New Construction
- [ ] Pull or Alter Casing
- [XX] Shoot or Acidize ✓
- [ ] Vent or Flare
- [ ] Water Shut-Off

Date of Work Completion 9/10/92

Report results of Multiple Completions and Recompletions to different reservoirs on WELL COMPLETION OR RECOMPLETION AND LOG form.
* Must be accompanied by a cement verification report.

13. DESCRIBE PROPOSED OR COMPLETED OPERATIONS (Clearly state all pertinent details, and give pertinent dates. If well is directionally drilled, give subsurface locations and measured and true vertical depths for all markers and zones pertinent to this work.)

Please see the attached chronological history for the perf and acid job performed on the above-referenced well.

RECEIVED
SEP 28 1992
DIVISION OF
OIL GAS & MINING

I hereby certify that the foregoing is true and correct

Name & Signature: Eileen Danni Dey
Eileen Danni Dey
Title: Regulatory Analyst Date: 9/24/92

(State Use Only)

See Instructions on Reverse Side

THE COASTAL CORPORATION
PRODUCTION REPORT

CHRONOLOGICAL HISTORY

TEW #1-15A3 (PERF & ACIDIZE)
ALTAMONT/BLUEBELL FIELD
DUCHESNE COUNTY, UTAH
WI: 49.23000% ANR AFE:
TD: 15,792'
CSG: 5" LINER @ 12,265'-15,792'
PERFS: 12,435'-14,334'
CWC(M$): 88.0

9/4/92 Finish RIH w/3-1/2" tbg. Perf 14,334'-12,529', 3 SPF, 120 deg phasing w/3-1/8" csg gun, 45 holes. RIH w/6 jts 2-7/8" tbg. PU & RIH w/MSOT 5" pkr & 28 jts 2-7/8" tbg, 345 jts 3-1/2" tbg. SDFN.
DC: $8,789 TC: $8,789

9/8/92 POOH, LD 3-1/2" tbg. RIH w/34 jts 3-1/2" tbg, set pkr @ 12,298' w/tailpipe to 12,480'. RU Western & acidize Wasatch perfs 12,435'-14,334' w/15,500 gals 15% HCl w/additives, BAF, rock salt & 801 - 1.1 BS's. Max press 8700 psi, avg press 8500 psi. Max rate 32 BPM, avg rate 24 BPM. ISIP 4400 psi, 15 min 3460 psi, total load 843 bbls. Excellent diversion. Open well to frac tank. Flwd 8 bbls. RU swab equip. Made 18 runs & rec 145 bbls. Last run 35% oil & pH 4, FL @ 1920'. Rls'd pkr, LD 35 jts 3-1/2" tbg. 698 BLTBR.
DC: $41,159 TC: $49,948

9/9/92 RIH w/2-7/8" tbg. LD 344 jts 3-1/2" tbg, 28 jts 2-7/8" tbg & 5" pkr. RIH w/prod BHA & 64 jts 2-7/8" tbg.
DC: $4,635 TC: $54,583

9/10/92 Well on pump. RIH w/2-7/8" tbg. Set tbg anchor @ 10,520' w/SN @ 10,409'. ND BOP, NU WH. RU hot oiler & flush tbg w/50 bbls of 275 deg wtr. RIH w/new pump & rods. PT tbg to 500 psi. Flushed flowline w/18 bbls 200 deg wtr. RD rig & equip. Start pmpg well up flowline.
DC: $7,086 TC: $61,669

9/10/92 Pmpd 6 BO, 284 BW, 28 MCF/11 hrs, 10 SPM.

9/11/92 Pmpd 13 BO, 473 BW, 25 MCF.

9/12/92 Pmpd 18 BO, 487 BW, 17 MCF.

9/13/92 Pmpd 42 BO, 427 BW, 28 MCF.

9/14/92 Pmpd 65 BO, 421 BW, 28 MCF.

9/15/92 Pmpd 72 BO, 402 BW, 32 MCF.

9/16/92 Pmpd 57 BO, 394 BW, 32 MCF.

9/17/92 Pmpd 79 BO, 412 BW, 32 MCF.

Prior prod: 0 BO, 0 BW, 0 MCF. Final report.

FORM 9

STATE OF UTAH
DIVISION OF OIL, GAS AND MINING

SUNDRY NOTICES AND REPORTS ON WELLS

Do not use this form for proposals to drill new wells, deepen existing wells, or to reenter plugged and abandoned wells. Use APPLICATION FOR PERMIT TO DRILL OR DEEPEN form for such proposals.

5. Lease Designation and Serial Number: Fee

6. If Indian, Allottee or Tribe Name: N/A

7. Unit Agreement Name: N/A

1. Type of Well: OIL [X] GAS [ ] OTHER:

8. Well Name and Number: Tew 1-15A3

2. Name of Operator: ANR Production Company

9. API Well Number: 43-013-30529

3. Address and Telephone Number: P.O. Box 749, Denver, CO 80201-0749 (303) 573-4476

10. Field and Pool, or Wildcat: Altamont

4. Location of Well

Footages: 1215' FEL & 1053' FNL

County: Duchesne

QQ, Sec., T., R., M.: NE/NE Section 15-T1S-R3W

State: Utah

11. CHECK APPROPRIATE BOXES TO INDICATE NATURE OF NOTICE, REPORT, OR OTHER DATA

NOTICE OF INTENT
(Submit in Duplicate)

- [ ] Abandonment
- [ ] Casing Repair
- [ ] Change of Plans
- [ ] Conversion to Injection
- [ ] Fracture Treat
- [ ] Multiple Completion
- [ ] Other
- [ ] New Construction
- [ ] Pull or Alter Casing
- [X] Recompletion
- [ ] Shoot or Acidize
- [ ] Vent or Flare
- [ ] Water Shut-Off

Approximate date work will start 4/30/94

SUBSEQUENT REPORT
(Submit Original Form Only)

- [ ] Abandonment *
- [ ] Casing Repair
- [ ] Change of Plans
- [ ] Conversion to Injection
- [ ] Fracture Treat
- [ ] Other
- [ ] New Construction
- [ ] Pull or Alter Casing
- [ ] Shoot or Acidize
- [ ] Vent or Flare
- [ ] Water Shut-Off

Date of work completion

Report results of Multiple Completions and Recompletions to different reservoirs on WELL COMPLETION OR RECOMPLETION AND LOG form.

* Must be accompanied by a cement verification report.

12. DESCRIBE PROPOSED OR COMPLETED OPERATIONS (Clearly state all pertinent details, and give pertinent dates. If well is directionally drilled, give subsurface locations and measured and true vertical depths for all markers and zones pertinent to this work.)

Please see the attached procedure to recomplete the Lower Green River in the subject well.

approved
BY THE STATE
OF UTAH DIVISION OF
OIL, GAS, AND MINING

DATE:

BY:

RECEIVED
APR 7 1994
DIV. OF OIL, GAS & MINING

13.

Name & Signature: Joe Adamski/sab

Title: Joe Adamski
Environmental Coord.

Date: 4/6/94

(This space for State use only)

(12\92)

(See Instructions on Reverse Side)

L. GREEN RIVER
RECPOMPLETION PROCEDURE

TEW #1-15A3
Section 15-T1S-R3W
Altamont Field
Duchesne County, Utah

WELL DATA

LOCATION: 1,594' FWL and 925' FSL

ELEVATION: 6,405' GL; 6,427' KB

TOTAL DEPTH: 15,792' PBTD: 14,389' (9/92)

CASING:
13⅜", 54.5#, K-55 @ 285' cmt w/400 sxs
9⅝", 40.0#, K-55 @ 7,705', cmt w/370 sxs
7", 29.0#, JL-95 @ 12,488', cmt w/1075 sxs
5", 18#, P110 @ 12,265' - 15,792', cmt w/575 sxs
5", 18#, P-110 Tie Back from 12,265' - 11,439', cmt w/200 sxs

TUBING:
2⅞" N-80 8rd 6.5#/ft @ 10,389'
TAC @ 10,524'; PSN @ 10,430'

TUBULAR DATA

Description	ID	Drift	Capacity B/F	Burst Psi	Collapse Psi
7" 29# JL-95	6.184"	6.059"	.0371	9690	7820
5" 18# P-110	4.276"	4.151"	.0177	13940	13450
2⅞" 6.5# N-80	2.441"	2.347"	.00579	10570	11160

WELL HISTORY

11/80 Perf 13,678' - 15,682', 3 SPF, 399 total holes.
Acidize w/40,300 gals 7½% HCl.

01/81 Initiated gas lift.

03/81 Perf 11,768' - 13,008', 3 SPF, 153 total holes.
Acidize perfs 11,768' - 13,008' w/23,100 gals 7½% HCl.
Acidize perfs 12,278' - 13,678' w/16,300 gals 7½% HCl.

05/82 CO wellbore. Spot 2000 gals 15% HCl across perfs below 13,100'.
Encountered scale from 13,103' - 15,605'.

03/83 CO csg to 15,190'. Isolate wtr zone w/pkrs.

07/87 Mill out straddle pkrs. Cmt sqz perfs from 11,768' - 12,225' w/1200 sxs cmt (90 holes.)
Perf Wasatch 12,309' - 13,699', 3 SPF, 297 total holes.
Acidize perfs from 12,154' - 15,682' w/25,000 gals 15% HCl.

10/87 Install beam pmp.

07/88 Cmt sqz perfs from 11,768' - 12,225' w/400 sxs cmt (90 holes).

11/89 Acidize perfs from 12,308' - 15,682', 759 holes w/23,000 gals 15% HCl.

Prior Production: 0
Post Production: 106 BOPD, 345 BWPD, 71 MCFPD

08/92 Install 5" tie-back liner from 12,265' - 11,439'.

Prior Production: Well SI w/uneconomical volumes 16 BOPD, 471 BWPD, 25 MCFPD.
Post Production: Well SI W.O. AFE to perf & acdz.

11/92 Add perfs from 12,529' - 14,334', 15 settings, 45 total holes. Acidize perfs from 12,435' - 14,333', 516 holes w/15,500 gals 15% HCl.

Prior Production: SI.
Post Production: 71 BOPD, 412 BWPD, 32 MCFPD.

PERFORATED INTERVAL:

11,768' - 15,682', 894 total holes.
Note: 90 perfs from 11,768' - 12,225' were sqz'd and blocked off w/tie-back liner. Also, 288 perfs are below PBTD @ 14,389'. 516 holes are now open.

PRESENT STATUS:

SI w/uneconomical production. Last production date was December 19,1993 when well made 2 BOPD, 2 BWPD and 13 MCFPD.

PROCEDURE:

1) MIRU service rig. Rls pmp and POOH w/rods. NU BOPE. Rls TAC @ 10,518', POOH and stand back 2⅞" prod. string.

2) PU & RIH w/7" csg scraper to tie-back liner @ 11,439'. POOH. RU & RIH w/4⅛" mill and 5" csg scraper. CO 5" tie-back liner to ±11,700'. POOH.

3) RU Wireline Service Company. PU & RIH w/5" CIBP and set @ ±11,600'. Dump 1 sk cmt on BP. PU & RIH w/3⅛" csg gun, 120° phasing, 3 SPF and perforate Gross L. Green River from 11,440' - 11,564', 20 settings, 60 total holes per the attached schedule. PU & RIH w/4" csg gun, 120° phasing, 3 SPF and perforate additional Gross L. Green River from 11,145' - 11,437', 32 settings, 96 total holes per the attached schedule. Record any fluid level or pressure changes.

4) PU & RIH w/7" Arrowset 1 10K pkr w/on/off tool and profile nipple on 3½", 9.3#, N-80 tbg. Set pkr @ ±11,100'.

5) Acidize the L.Green River formation from 11,145' - 11,564', 156 total holes w/4,700 gals 15% HCl w/200 1.1 BS's evenly spaced and 1/4#/gal Benzoic acid flakes in last 2500 gals of acid pumped. MTP 8500 psi.

   A) Precede acid w/25 bbls wtr w/10 gals/1000 gals scale inhibitor w/1/4# gals Benzoic acid flakes.

   B) All wtr to contain 3% KCl.

   C) All fluids to be pumped at 150°F.

6) Flow/swab back acid load. If well flows back strongly, drop plug and rls from on/off tool. POOH and LD 3½" tbg. TIH w/2⅞" tbg and latch into pkr. Retrieve plug and return to production until press drops and well quits flowing. Then proceed to step #7.

7) RIH w/production equipment. Size of downhole pump to be determined after consultation w/Denver Office. Return well to production.

SCP:rrd

GREATER ALTAMONT FIELD

ANR - TEW #1-15A3
NE/4 Sec. 15-T1S-R3W
Duchesne County, Utah

PERFORATION SCHEDULE

Depth Reference: Schlumberger DIL-SFL, Run #2 (8/1/80)

11564	11475	11396	11245
11552	11469	11389	11235
11546	11468	11372	11218
11540	11461	11358	11208
11529	11453	11351	11199
11522	11444	11347	11191
11511	11440	11333	11184
11506	11437	11307	11170
11493	11427	11300	11165
11492	11423	11291	11159
11487	11418	11277	11153
11486	11407	11265	11149
11480	11401	11256	11145

Gross Lower Green River Interval: 11,145'- 11,564', 52 feet, 39 zones

RJL
R.J. La Rocque:rrd
February 10, 1994

c:\wp51\rjl\t1-15a3.per

PRESENT WELLBORE SCHEMATIC
Tew # 1-15A3
AS OF 2/24/94

S.C. Frutch

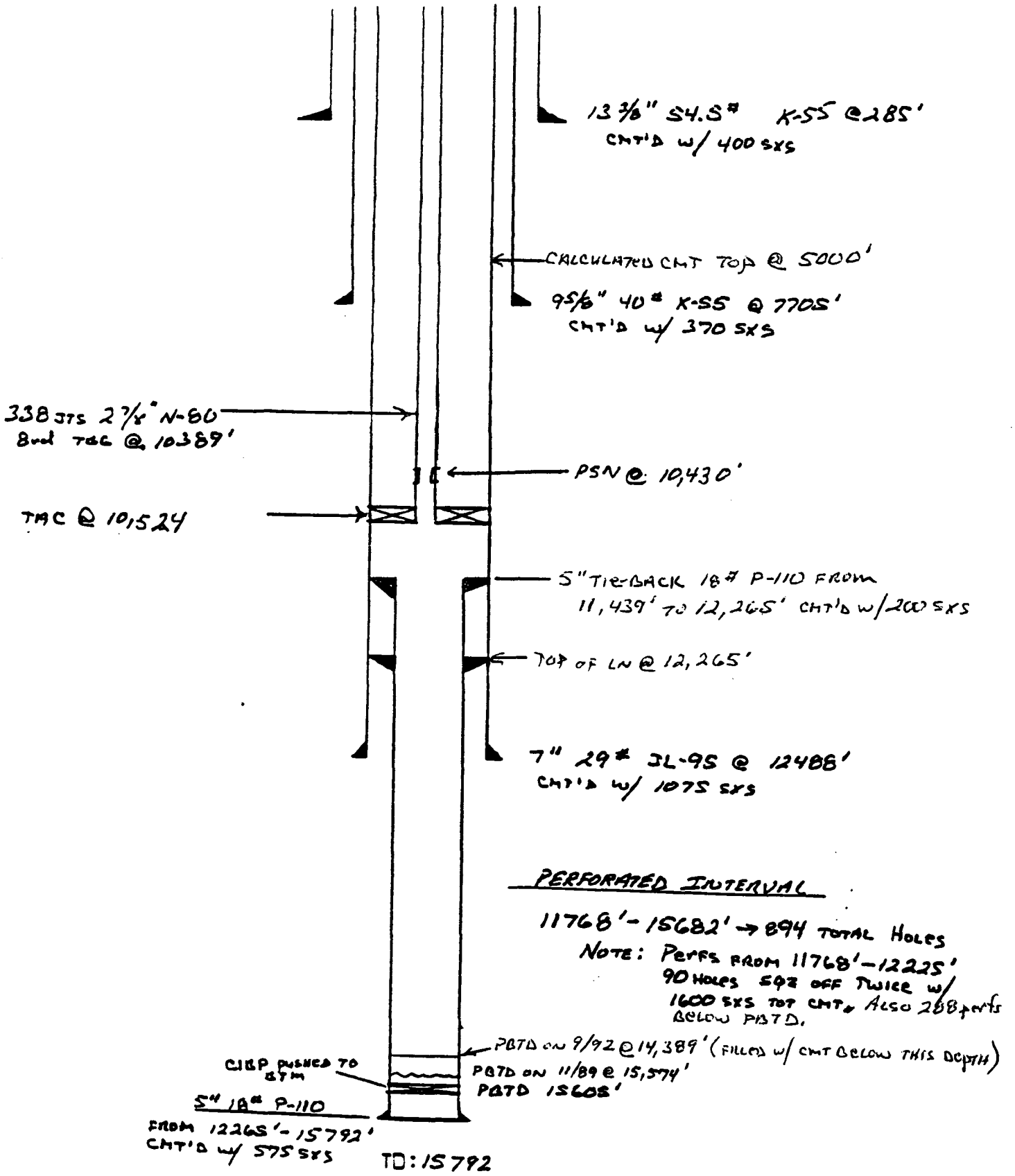

FORM 9

STATE OF UTAH
DIVISION OF OIL, GAS AND MINING

SUNDRY NOTICES AND REPORTS ON WELLS

Do not use this form for proposals to drill new wells, deepen existing wells, or to reenter plugged and abandoned wells.
Use APPLICATION FOR PERMIT TO DRILL OR DEEPEN form for such proposals.

5. Lease Designation and Serial Number: Fee
6. If Indian, Allottee or Tribe Name: N/A
7. Unit Agreement Name: N/A
8. Well Name and Number: Tew #1-15A3
9. API Well Number: 43-013-30529
10. Field and Pool, or Wildcat: Altamont

1. Type of Well: OIL [X] GAS [ ] OTHER:

2. Name of Operator: ANR Production Company

3. Address and Telephone Number: P.O. Box 749, Denver, CO 80201-0749 (303) 573-4476

4. Location of Well
Footages: 1215' FEL & 1053' FNL
QQ, Sec., T., R., M.: NE/NE Section 15-T1S-R3W
County: Duchesne
State: Utah

JUL - 5 1994

11. CHECK APPROPRIATE BOXES TO INDICATE NATURE OF NOTICE, REPORT, OR OTHER DATA

NOTICE OF INTENT
(Submit in Duplicate)

- [ ] Abandonment
- [ ] Casing Repair
- [ ] Change of Plans
- [ ] Conversion to Injection
- [ ] Fracture Treat
- [ ] Multiple Completion
- [ ] Other
- [ ] New Construction
- [ ] Pull or Alter Casing
- [ ] Recompletion
- [ ] Shoot or Acidize
- [ ] Vent or Flare
- [ ] Water Shut-Off

Approximate date work will start

SUBSEQUENT REPORT
(Submit Original Form Only)

- [ ] Abandonment *
- [ ] Casing Repair
- [ ] Change of Plans
- [ ] Conversion to Injection
- [ ] Fracture Treat
- [X] Other Recomplete
- [ ] New Construction
- [ ] Pull or Alter Casing
- [ ] Shoot or Acidize
- [ ] Vent or Flare
- [ ] Water Shut-Off

Date of work completion 5/22/94

Report results of Multiple Completions and Recompletions to different reservoirs on WELL COMPLETION OR RECOMPLETION AND LOG form.

* Must be accompanied by a cement verification report.

12. DESCRIBE PROPOSED OR COMPLETED OPERATIONS (Clearly state all pertinent details, and give pertinent dates. If well is directionally drilled, give subsurface locations and measured and true vertical depths for all markers and zones pertinent to this work.)

Please see the attached chronological history for the work performed in the subject well.

13.
Name & Signature: N.O. Shiflett
Title: N.O. Shiflett Dist. Drlg. Manager
Date: 6/29/94

(This space for State use only)

tax credit 1/25/95

(12\92)

(See Instructions on Reverse Side)

THE COASTAL CORPORATION
PRODUCTION REPORT

CHRONOLOGICAL HISTORY

TEW #1-15A3 (RECOMPLETE LOWER GREEN RIVER)
ALTAMONT FIELD
DUCHESNE COUNTY, UT
WI: 49.23% ANR AFE: 00137
TD: 15,792' PBTD: 11,600' (CIBP)
5" LINER @ 11,439'-15,792'
PERFS: 11,145'-11,564' (LGR)
CWC(M$): 100.6

5/2/94 Dialog tbg.
RU rig. Pull pump off seat, flush tbg. Seat pump. No test. POOH w/rods & pump. Install BOP's. CC: $3,118

5/3/94 POOH w/prod tbg.
RU Dialog. RIH, find split @ 327th jt. Log out 236 jts (0-30%), 82 jts (35-45%), 20 jts (50-100%). Rls anchor. POOH w/260 jts 2⅞". Sorting grades of tbg. CC: $8,088

5/4/94 POOH w/scraper.
Continue to POOH w/2⅞", sorting out tbg. LD 4½" PBGA, 1-jt 2⅞", 2⅞" plug, perf jt, 4' sub, 7' anchor. RIH w/Mtn States 6⅛" drag bit, 7" scraper, 316 jts 2⅞". Tag 5" liner @ 11,439'. Saw no scale or tight spots to 2500'. CC: $11,454

5/5/94 LD bailer.
POOH w/rest of 2⅞", 7" scraper. RIH w/4⅛" mill, check, 1-jt 2⅜", check, 29 jts 2⅜", safety jt, bailer, 58 jts 2⅜", XO, 377 jts 2⅞", tag @ 14,384'. Bail to 14,389' PBTD. LD 40 jts 2⅞". POOH w/337 jts 2⅞". CC: $16,699

5/6/94 RIH w/3½" tbg.
POOH w/rest of 2⅜" tbg & bailer. 1-jt full of scale, frac balls. RU OWP. Ran Gamma Ray Log from 11,700' to 10,700'. Set 5" CIBP @ 11,600'. Dump 1 sx cmt on top of plug. Made 4 perf runs. Perf'd Lower Green River @ 11,145'-11,564' (156 holes):

Run #	Interval	Feet	Holes	FL	PSI
1	11,564'-11,487'	11	33	5600'	0
2	11,486'-11,423'	12	36	5600'	0
3	11,418'-11,256'	16	48	5440'	0
4	11,245'-11,145'	13	39	5400'	0
	Total	52	156		

RIH w/2⅜" re-entry sub, F-nipple, 1-jt 2⅞", 7" Arrow-set I pkr with on-off tool, SN, 40 jts 3½" tbg. CC: $36,959

5/7-8/94 SD for weekend.

5/9/94 Prep to acidize.
Continue to PU 3½" tbg. Set 7" pkr @ 11,048' w/35,000# compression. Pump 100 bbls prod wtr down csg. PT csg to 2000 psi, hold. CC: $41,871

5/10/94 Swab back load.
RU Dowell. Acidize perfs 11,145'-11,564' (156 holes) w/4700 gal 15% HCl w/additives, BAF, 200 - 1.1 ball sealers. MTP 9100#, ATP 8450#, min trtg pressure 4100#. MTR 27 BPM, ATR 19 BPM. ISIP 2650#, 15 min SIP 1820#. Excellent diversion, 270 BLWTR. RU to swab. Made 19 swab runs. Rec 35 BO, 163 BLW/7 hrs, FFL 2400', pH 5.0, 24% oil, 24 BPH, 107 BLWTR. CC: $66,374

5/11/94 LD 3½" tbg.
Check tbg pressure - 250 psi. RU to swab, IFL 1800'. Rec 36 bbls in 4 runs, oil cut 30%, pH 5.0, FFL 1800'. RD swab. Rls 7" pkr. LD 301 jts 3½". CC: $71,180

THE COASTAL CORPORATION
PRODUCTION REPORT

CHRONOLOGICAL HISTORY

TEW #1-15A3 (RECOMPLETE LOWER GREEN RIVER)
ALTAMONT FIELD
DUCHESNE COUNTY, UT
WI: 49.23% ANR AFE: 00137

5/12/94 RIH w/rods.
LD rest of 3½" tbg, 7" pkr, 2⅞" jt, F-nipple. RIH w/prod string: Mtn States 7" AC, 4' 2⅞" sub, 2⅞" perf jt, 2⅞" plug, 1-jt 2⅞", 4½" PBGA, 6' 2⅞" sub, SN, 337 jts 2⅞". Remove BOP's. Set anchor @ 10,524' w/20,000# tension, SN @ 10,415'. RIH w/Nat'l 1¾" pump, 6 - 1", 137 - ¾". CC: $82,080

5/13/94 Well on pump.
Continue to RIH w/rods: 135 - ⅞", 135 - 1". Space out, seat pump. PT to 500 psi. RD rig. Turn well to pumper. CC: $89,626

5/13/94 Pmpd 114 BO, 207 BW, 20 MCF.

5/14/94 Pmpd 5 BO, 386 BW, 25 MCF.

5/15/94 Pmpd 3 BO, 332 BW, 25 MCF.

5/16/94 Pmpd 0 BO, 279 BW, 25 MCF, 8 SPM. Filling heater treater.

5/17/94 Pmpd 56 BO, 287 BW, 45 MCF, 9.5 SPM.

5/18/94 Pmpd 76 BO, 285 BW, 53 MCF, 9.2 SPM.

5/19/94 Pmpd 94 BO, 371 BW, 65 MCF, 11 SPM.

5/20/94 Pmpd 84 BO, 412 BW, 58 MCF.

5/21/94 Pmpd 81 BO, 381 BW, 56 MCF.

5/22/94 Pmpd 75 BO, 335 BW, 52 MCF, 11 SPM.

Prior prod: 2 BO, 2 BW, 13 MCF. Final Report.

Well Name & No.	API No.	Lease Designation & Serial Number	If Indian, Allottee or Tribe Name	CA No.	LOCATION OF WELL Footages	Section, Township & Range	Field	County
Miles 2-1B5	43-013-31257	Fee 11062	N/A	N/A	1567' FSL & 1868' FWL	NESW, 1-2S-5W	Altamont	Duchesne
Miles 2-3B3	43-013-31261	Fee 11102	N/A	N/A	2078' FSL & 2477' FWL	NESW, 3-2S-3W	Altamont	Duchesne
Monsen 1-21A3	43-013-30082	Patented 1590	N/A	N/A	1546' FNL & 705' FEL	SENE, 21-1S-3W	Altamont	Duchesne
Monsen 2-22A3	43-013-31265	Fee 11098	N/A	N/A	1141' FSL & 251' FWL	SWSW, 22-1S-3W	Altamont	Duchesne
Murdock 2-26B5	43-013-31124	Fee 1531	N/A	N/A	852' FWL & 937' FSL	SWSW, 26-2S-5W	Altamont	Duchesne
Potter 1-24B5	43-013-30356	Patented 1730	N/A	N/A	1110' FNL & 828' FEL	SENE, 24-2S-5W	Altamont	Duchesne
Potter 1-2B5	43-013-30293	Patented 1826	N/A	N/A	1832' FNL & 1385' FEL	SWNE, 2-2S-5W	Altamont	Duchesne
Potter 2-24B5	43-013-31118	Fee 1731	N/A	N/A	922' FWL & 2124' FSL	NWSW, 24-2S-5W	Altamont	Duchesne
Potter 2-6B4	43-013-31249	Fee 11038	N/A	N/A	1517' FSL & 1732' FWL	NESW, 6-2S-4W	Altamont	Duchesne
Powell 1-33A3	43-013-30105	Fee 1625	N/A	N/A	2340' FNL & 660' FEL	SENE, 33-1S-3W	Altamont	Duchesne
Powell 2-33A3	43-013-30704	Fee 2400	N/A	N/A	1582' FSL & 1558' FWL	NESW, 33-1S-3W	Altamont	Duchesne
Reeder 1-17B5	43-013-30218	Patented 1710	N/A	N/A	1619' FNL & 563' FEL	SENE, 17-2S-5W	Altamont	Duchesne
Remington 1-34A3	43-013-30139	Patented 1725	N/A	N/A	919' FNL & 1596' FEL	NWNE, 34-1S-3W	Altamont	Duchesne
Remington 2-34A3	43-013-31091	Fee 1730	N/A	N/A	1645' FWL & 1833' FSL	NESW, 34-1S-3W	Altamont	Duchesen
Roper 1-14B3	43-013-30217	Fee 1850	N/A	N/A	1623' FNL & 2102' FWL	SENW, 14-2S-3W	Bluebell	Duchesne
Rust 1-4B3	43-013-30063	Patented 1575	N/A	N/A	2030' FNL & 660' FEL	SENE, 4-2S-3W	Altamont	Duchesne
Rust 3-4B3	43-013-31070	Fee 1576	N/A	N/A	1072' FSL & 1460' FWL	SESW, 4-2S-3W	Altamont	Duchesne
Smith 1-31B5	43-013-30577	Fee 1955	N/A	N/A	2232' FSL & 1588' FEL	NWSE, 31-2S-5W	Altamont	Duchesne
State 1-19B1	43-013-30688	ML-30598 ~~Fee~~ 2395	N/A	N/A	1043' FWL & 1298' FNL	NWNW, 19-2S-1W	Bluebell	Duchesne
Stevenson 3-29A3	43-013-31376	Fee 11442	N/A	N/A	1347' FNL & 1134' FWL	CNW, 29-1S-3W	Altamont	Duchesne
Tew 1-15A3	43-013-30529	Fee 1945	N/A	N/A	1215' FEL & 1053' FNL	NENE, 15-1S-3W	Altamont	Duchesne
Tew 1-1B5	43-013-30264	Patented 1870	N/A	N/A	1558' FNL & 671' FEL	NENE, 1-2S-5W	Altamont	Duchesne
Todd 2-21A3	43-013-31296	Fee 11268	N/A	N/A	2456' FSL & 1106' FWL	NWSW, 21-1S-3W	Bluebell	Duchesne
Weikert 2-29B4	43-013-31298	Fee 11332	N/A	N/A	1528' FNL & 1051' FWL	SWNW, 29-2S-4W	Bluebell	Duchesne
Whitehead 1-22A3	43-013-30357	Patented 1885	N/A	N/A	2309' FNL & 2450' FEL	SWNE, 22-1S-3W	Altamont	Duchesne
Winkler 1-28A3	43-013-30191	Patented 1750	N/A	N/A	660' FNL & 1664' FEL	NWNE, 28-1S-3W	Altamont	Duchesne
Winkler 2-28A3	43-013-31109	Fee 1751	N/A	N/A	1645' FWL & 919' FSL	SESW, 28-1S-3W	Altamont	Duchesne
Wright 2-13B5	43-013-31267	Fee 11115	N/A	N/A	2442' FNL & 2100' FWL	SENW, 13-2S-5W	Altamont	Duchesne
Young 1-29B4	43-013-30246	Patented 1791	N/A	N/A	2311' FNL & 876' FEL	SENE, 29-2S-4W	Altamont	Duchesne
Young 2-15A3	43-013-31301	Fee 11344	N/A	N/A	1827' FWL & 1968' FWL	NWSW, 15-1S-3W	Altamont	Duchesne
Young 2-30B4	43-013-31366	Fee 11453	N/A	N/A	2400' FNL & 1600' FWL	SENW, 30-2S-4W	Altamont	Duchesne
Ute Tribal 2-21B6	43-013-31424	14-20-H62-2489 11615	Ute	9639	1226' FSL & 1306' FEL	SESE, 22-2S-6W	Altamont	Duchesne
Ute 1-34A4	43-013-30076	14-20-H62-1774 1585	Ute	9640	1050' FWL & 1900' FNL	SWNW, 12-2S-3W	Bluebell	Duchesne
Ute 1-36A4	43-013-30069	14-20-H62-1793 1580	Ute	9642	1544' FEL & 1419' FNL	SWNE, 28-2S-4W	Altamont	Duchesne
Ute 1-1B4	43-013-30129	14-20-H62-1798 1700	Ute	9649	500' FNL & 2380' FWL	NENW, 1-2S-4W	Altamont	Duchesne
Ute Jenks 2-1B4	43-013-31197	14-20-H62-1782 10844	Ute	9649	1167' FSL & 920' FWL	SWSW, 33-1N-2W	Bluebell	Duchesne
Evans 2-19B3	43-013-31113	14-20-H62-1734 1777	Ute	9678	983' FSL & 683' FEL	SESE, 21-2S-6W	Altamont	Duchesne
Ute 3-12B3	43-013-31379	14-20-H62-1810 11490	Ute	9679	2219' FNL & 2213' FEL	SWNE, 8-1S-1E	Bluebell	Uintah
Ute 1-28B4	43-013-30242	14-20-H62-1745 1796	Ute	9681	1727' FWL & 1675' FSL	NESW, 19-2S-3W	Altamont	Duchesne
Murdock 2-34B5	43-013-31132	14-20-H62-2511 10456	Ute	9685	1420' FNL & 1356' FEL	SWNE, 34-1S-4W	Altamont	Duchesne
Ute Tribal 10-13A4	43-013-30301	14-20-H62-1685 5925	Ute	9C-126	2230' FNL & 1582' FEL	SWNE, 33-1N-2W	Bluebell	Duchesne
Ute 1-8A1E	43-047-30173	14-20-H62-2714 1846	Ute	9C138	1543' FSL & 2251' FWL	NESW, 34-2S-5W	Altamont	Duchesne
Ute 2-33Z2	43-013-31111	14-20-H62-1703 10451	Ute	9C140	802' FNL & 1545' FWL	NWNE, 13-1S-4W	Altamont	Duchesne
Ute Tribal 1-33Z2	43-013-30334	14-20-H62-1703 1851	Ute	9C140	1660' FSL & 917' FWL	NWSW, 18-2S-3W	Altamont	Duchesne
Myrin Ranch 2-18B3	43-013-31297	14-20-H62-1744,4521,4522,4554	N/A 11475	UTU70814	975' FNL & 936' FEL	NENE, 36-1S-4W	Altamont	Duchesne
Ute Tribal 2-22B6	43-013-31444	14-20-H62-4644 11641	Ute	UTU73743	1401' FSL & 1295' FWL	NWSW, 15-2S-6W	Altamont	Duchesne
Ute 1-15B6	43-013-31484	14-20-H62-4647 11816	Ute	UTU73964	1879' FNL & 1070' FEL	SENE, 1-2S-4W	Altamont	Duchesne
Ute 1-25A3	43-013-30370	14-20-H62-1802 1920	Ute	N/A	1727' FNL & 1784' FEL	SWNE, 25-1S-3W	Bluebell	Duchesne
Ute 1-26A3	43-013-30348	14-20-H62-1803 1890	Ute	N/A	1869' FNL & 1731' FWL	SENW, 26-1S-3W	Bluebell	Duchesne

UTU[illegible]
9679
9681
9C140
9639
9C138
9678
9640
9C-140
9685
9C126
UTU7081
9642
UTU7396
9649

FORM 9

STATE OF UTAH
DIVISION OF OIL, GAS AND MINING

5. Lease Designation and Serial Number: See Attached

SUNDRY NOTICES AND REPORTS ON WELLS

Do not use this form for proposals to drill new wells, deepen existing wells, or to reenter plugged and abandoned wells.
Use APPLICATION FOR PERMIT TO DRILL OR DEEPEN form for such proposals.

6. If Indian, Allottee or Tribe Name: See Attached

7. Unit Agreement Name: See Attached

1. Type of Well: OIL [X] GAS [ ] OTHER:

8. Well Name and Number: See Attached

2. Name of Operator: Coastal Oil & Gas Corporation

9. API Well Number: See Attached

3. Address and Telephone Number: P.O. Box 749, Denver, CO 80201-0749 (303) 573-4455

10. Field and Pool, or Wildcat: See Attached

4. Location of Well

Footages: See Attached
QQ, Sec., T., R., M.: See Attached
County: See Attached
State: Utah

11. **CHECK APPROPRIATE BOXES TO INDICATE NATURE OF NOTICE, REPORT, OR OTHER DATA**

NOTICE OF INTENT
(Submit In Duplicate)

- [ ] Abandon
- [ ] Repair Casing
- [ ] Change of Plans
- [ ] Convert to Injection
- [ ] Fracture Treat or Acidize
- [ ] Multiple Completion
- [ ] Other
- [ ] New Construction
- [ ] Pull or Alter Casing
- [ ] Recompletion
- [ ] Perforate
- [ ] Vent or Flare
- [ ] Water Shut-Off

Approximate date work will start

SUBSEQUENT REPORT
(Submit Original Form Only)

- [ ] Abandon *
- [ ] Repair Casing
- [ ] Change of Plans
- [ ] Convert to Injection
- [ ] Fracture Treat or Acidize
- [X] Other Change of Operator
- [ ] New Construction
- [ ] Pull or Alter Casing
- [ ] Perforate
- [ ] Vent or Flare
- [ ] Water Shut-Off

Date of work completion

Report results of **Multiple Completions** and **Recompletions** to different reservoirs on WELL COMPLETION OR RECOMPLETION REPORT AND LOG form.

* Must be accompanied by a cement verification report.

12. DESCRIBE PROPOSED OR COMPLETED OPERATIONS (Clearly state all pertinent details, and give pertinent dates. If well is directionally drilled, give subsurface locations and measured and true vertical depths for all markers and zones pertinent to this work.)

Please be advised that effective December 27, 1995, ANR Production Company relinquished and Coastal Oil & Gas Corporation assumed operations for the subject wells (see attached). Bond coverage pursuant to 43 CFR 3104 for lease activities is being provided by Coastal Oil & Gas Corporation under the following bonds: State of Utah #102103, BLM Nationwide Bond #U605382-9, and BIA Nationwide Bond #11-40-66A. Coastal Oil & Gas Corporation, as operator, agrees to be responsible under the terms and conditions of the leases for the operations conducted upon leased lands.

Bonnie Carson
Bonnie Carson, Sr. Environmental & Safety Analyst
ANR Production Company

RECEIVED
MAR - 8 1996
DIV OF OIL, GAS & MINING

13.

Name & Signature: Sheila Bremer

Sheila Bremer
Environmental & Safety Analyst
Title: Coastal Oil & Gas Corporation Date: 03/07/96

(This space for State use only)

(5/94)

(See Instructions on Reverse Side)

Division of Oil, Gas and Mining
OPERATOR CHANGE WORKSHEET

Routing: GH

1-LEC	7-SJ
2-DTS	8-FILE
3-VLD	
4-RJF	
5-LEC	
6-FILM	

Attach all documentation received by the division regarding this change.
Initial each listed item when completed. Write N/A if item is not applicable.

☒ Change of Operator (well sold) ☐ Designation of Agent
☐ Designation of Operator ☐ Operator Name Change Only

The operator of the well(s) listed below has changed (EFFECTIVE DATE: 12-27-95)

TO (new operator) COASTAL OIL & GAS CORP
(address) PO BOX 749
DENVER CO 80201-0749

phone (303)572-1121
account no. N 0230 (B)

FROM (former operator) ANR PRODUCTION CO INC
(address) PO BOX 749
DENVER CO 80201-0749

phone (303)572-1121
account no. N0675

Well(s) (attach additional page if needed):

Name:	API:	Entity:	Sec	Twp	Rng	Lease Type:
SEE ATTACHED	013-30529					

OPERATOR CHANGE DOCUMENTATION

Lec 1. (Rule R615-8-10) Sundry or other legal documentation has been received from former operator (Attach to this form). (Rec'd 3-8-96)

Lec 2. (Rule R615-8-10) Sundry or other legal documentation has been received from new operator (Attach to this form). (Rec'd 3-8-96)

N/A 3. The Department of Commerce has been contacted if the new operator above is not currently operating any wells in Utah. Is company registered with the state? (yes/no) _____ If yes, show company file number: _____.

N/A 4. **(For Indian and Federal Wells ONLY)** The BLM has been contacted regarding this change (attach Telephone Documentation Form to this report). Make note of BLM status in comments section of this form. Management review of **Federal and Indian** well operator changes should take place prior to completion of steps 5 through 9 below.

Lec 5. Changes have been entered in the Oil and Gas Information System (Wang/IBM) for each well listed above. (3-11-96)(4-3-96 Indian)(4-15-96 Fee C.A.'s)(8-20-96 Indian C.A.'s)

Lec 6. Cardex file has been updated for each well listed above.

Lec 7. Well file labels have been updated for each well listed above.

Lec 8. Changes have been included on the monthly "Operator, Address, and Account Changes" memo for distribution to State Lands and the Tax Commission. (3-11-96)

Lec 9. A folder has been set up for the Operator Change file, and a copy of this page has been placed there for reference during routing and processing of the original documents.

– OVER –

OPERATOR CHANGE WORKSHEET (CONTINUED) Initial each item when completed. Write N/A if item is not applicable.

ENTITY REVIEW

Lec 1. (Rule R615-8-7) Entity assignments have been reviewed for all wells listed above. Were entity changes made? (yes/no) ____ (If entity assignments were changed, attach copies of Form 6, Entity Action Form).

N/A 2. State Lands and the Tax Commission have been notified through normal procedures of entity changes.

BOND VERIFICATION (Fee wells only) Surety No. U605382-1 ($80,000) United Pacific Ins. Co.

Lec 1. (Rule R615-3-1) The new operator of any fee lease well listed above has furnished a proper bond.

* Upon Compl. of routing.

___ 2. A copy of this form has been placed in the new and former operators' bond files.

Lec 3. The former operator has requested a release of liability from their bond (yes/no) ___. Today's date March 11, 1996. If yes, division response was made by letter dated _____ 19___. (Same Bond as Coastal)

LEASE INTEREST OWNER NOTIFICATION RESPONSIBILITY

N/A 1. (Rule R615-2-10) The former operator/lessee of any **fee lease** well listed above has been notified by letter dated _____ 19___, of their responsibility to notify any person with an interest in such lease of the change of operator. Documentation of such notification has been requested.

___ 2. Copies of documents have been sent to State Lands for changes involving **State leases**.

FILMING

VS 1. All attachments to this form have been microfilmed. Date: 1-7 1997.

FILING

___ 1. Copies of all attachments to this form have been filed in each well file.

___ 2. The original of this form and the original attachments have been filed in the Operator Change file.

COMMENTS

960311 This change involves Fee lease/non C.A. wells ~~only~~ & State lease wells.
~~C.A.'s Indian lease wells will be handled on separate change.~~
960412 BLM/SL Aprv. C.A.'s 4-11-96.
960820 BIA Aprv. CA's 8-16-96.
960329 BIA Aprv. Indian Lease wells 3-26-96.
*961107 Lemicq 2-5B2/43-013-30784 under review at this time; no chg. yet!

WE71/34-35

STATE OF UTAH
DEPARTMENT OF NATURAL RESOURCES
DIVISION OF OIL, GAS AND MINING

FORM 9

SUNDRY NOTICES AND REPORTS ON WELLS

Do not use this form for proposals to drill new wells, significantly deepen existing wells below current bottom-hole depth, reenter plugged wells, or to drill horizontal laterals. Use APPLICATION FOR PERMIT TO DRILL form for such proposals.

5. LEASE DESIGNATION AND SERIAL NUMBER:

6. IF INDIAN, ALLOTTEE OR TRIBE NAME:

7. UNIT or CA AGREEMENT NAME:

1. TYPE OF WELL: OIL WELL ☐ GAS WELL ☐ OTHER

8. WELL NAME and NUMBER: Exhibit "A"

2. NAME OF OPERATOR: El Paso Production Oil & Gas Company

9. API NUMBER:

3. ADDRESS OF OPERATOR: 368 South 1200 East CITY Vernal STATE Utah ZIP 84078 PHONE NUMBER: 435-789-4433

10. FIELD AND POOL, OR WILDCAT:

4. LOCATION OF WELL

FOOTAGES AT SURFACE:

COUNTY:

QTR/QTR, SECTION, TOWNSHIP, RANGE, MERIDIAN:

STATE: UTAH

11. CHECK APPROPRIATE BOXES TO INDICATE NATURE OF NOTICE, REPORT, OR OTHER DATA

TYPE OF SUBMISSION	TYPE OF ACTION		
☐ NOTICE OF INTENT (Submit in Duplicate)	☐ ACIDIZE	☐ DEEPEN	☐ REPERFORATE CURRENT FORMATION
Approximate date work will start:	☐ ALTER CASING	☐ FRACTURE TREAT	☐ SIDETRACK TO REPAIR WELL
	☐ CASING REPAIR	☐ NEW CONSTRUCTION	☐ TEMPORARILY ABANDON
	☐ CHANGE TO PREVIOUS PLANS	☐ OPERATOR CHANGE	☐ TUBING REPAIR
	☐ CHANGE TUBING	☐ PLUG AND ABANDON	☐ VENT OR FLARE
☐ SUBSEQUENT REPORT (Submit Original Form Only)	☐ CHANGE WELL NAME	☐ PLUG BACK	☐ WATER DISPOSAL
Date of work completion:	☐ CHANGE WELL STATUS	☐ PRODUCTION (START/RESUME)	☐ WATER SHUT-OFF
	☐ COMMINGLE PRODUCING FORMATIONS	☐ RECLAMATION OF WELL SITE	☒ OTHER: Name Change
	☐ CONVERT WELL TYPE	☐ RECOMPLETE - DIFFERENT FORMATION	

12. DESCRIBE PROPOSED OR COMPLETED OPERATIONS. Clearly show all pertinent details including dates, depths, volumes, etc.

As a result of the merger between The Coastal Corporation and a wholly owned subsidary of El Paso Energy Corporation, the name of Coastal Oil & Gas Corporation has been changed to El Paso Production Oil & Gas Company effective March 9, 2001.

See Exhibit "A"

Bond # 400JU0708

Coastal Oil & Gas Corporation

NAME (PLEASE PRINT) John T. Elzner TITLE Vice President

SIGNATURE DATE 06-15-01

El Paso Production Oil & Gas Company

NAME (PLEASE PRINT) John T. Elzner TITLE Vice President

SIGNATURE DATE 06-15-01

(This space for State use only)

RECEIVED

JUN 19 2001

DIVISION OF OIL, GAS AND MINING

(5/2000)

(See Instructions on Reverse Side)

State of Delaware

Office of the Secretary of State

I, HARRIET SMITH WINDSOR, SECRETARY OF STATE OF THE STATE OF DELAWARE, DO HEREBY CERTIFY THE ATTACHED IS A TRUE AND CORRECT COPY OF THE CERTIFICATE OF AMENDMENT OF "COASTAL OIL & GAS CORPORATION", CHANGING ITS NAME FROM "COASTAL OIL & GAS CORPORATION" TO "EL PASO PRODUCTION OIL & GAS COMPANY", FILED IN THIS OFFICE ON THE NINTH DAY OF MARCH, A.D. 2001, AT 11 O'CLOCK A.M.

RECEIVED

JUN 19 2001

DIVISION OF
OIL, GAS AND MINING

Harriet Smith Windsor

Harriet Smith Windsor, Secretary of State

0610204 8100

010162788

AUTHENTICATION: 1061007

DATE: 04-03-01

CERTIFICATE OF AMENDMENT

OF

CERTIFICATE OF INCORPORATION

COASTAL OIL & GAS CORPORATION (the "Company"), a corporation organized and existing under and by virtue of the General Corporation Law of the State of Delaware, DOES HEREBY CERTIFY:

FIRST: That the Board of Directors of the Company, by the unanimous written consent of its members, filed with the minutes of the Board, adopted a resolution proposing and declaring advisable the following amendment to the Certificate of Incorporation of the Company:

RESOLVED that it is deemed advisable that the Certificate of Incorporation of this Company be amended, and that said Certificate of Incorporation be so amended, by changing the Article thereof numbered "FIRST," so that, as amended, said Article shall be and read as follows:

"FIRST. The name of the corporation is El Paso Production Oil & Gas Company."

SECOND: That in lieu of a meeting and vote of stockholders, the stockholders entitled to vote have given unanimous written consent to said amendment in accordance with the provisions of Section 228 of the General Corporation Law of the State of Delaware.

THIRD: That the aforesaid amendment was duly adopted in accordance with the applicable provisions of Sections 242 and 228 of the General Corporation Law of the State of Delaware.

IN WITNESS WHEREOF, said COASTAL OIL & GAS CORPORATION has caused this certificate to be signed on its behalf by a Vice President and attested by an Assistant Secretary, this 9th day of March 2001.

COASTAL OIL & GAS CORPORATION

David L. Siddall
Vice President

Attest:

Margaret E. Roark, Assistant Secretary

RECEIVED

JUN 19 2001

DIVISION OF
OIL, GAS AND MINING

STATE OF DELAWARE
SECRETARY OF STATE
DIVISION OF CORPORATIONS
FILED 11:00 AM 03/09/2001
010118394 - 0610204

Division of Oil, Gas and Mining

OPERATOR CHANGE WORKSHEET

ROUTING		
1. GLH		4-KAS ✓
2. CDW ✓		5-LP ✓
3. JLT		6-FILE

Enter date after each listed item is completed

Change of Operator (Well Sold) — Designation of Agent

Operator Name Change (Only) — X **Merger**

The operator of the well(s) listed below has changed, effective: **3-09-2001**

FROM: (Old Operator):	**TO:** (New Operator):
COASTAL OIL & GAS CORPORATION	EL PASO PRODUCTION OIL & GAS COMPANY
Address: 9 GREENWAY PLAZA STE 2721	Address: 9 GREENWAY PLAZA STE 2721 RM 2975B
HOUSTON, TX 77046-0995	HOUSTON, TX 77046-0995
Phone: 1-(713)-418-4635	Phone: 1-(832)-676-4721
Account N0230	Account N1845

CA No. **Unit:**

WELL(S)

NAME	API NO	ENTITY NO	SEC TWN RNG	LEASE TYPE	WELL TYPE	WELL STATUS
CHENEY 2-33A2	43-013-31042	5306	33-01S-02W	FEE	OW	S
URRUTY 2-34A2	43-013-30753	2415	34-01S-02W	FEE	OW	S
UTE TRIBAL 2-4	43-013-30950	9262	04-01S-03W	FEE	OW	S
FISHER 2-6A3	43-013-30984	10480	06-01S-03W	FEE	OW	S
GEORGE FISHER 1-7A3	43-013-30131	9113	07-01S-03W	FEE	OW	S
MORRIS 2-7A3	43-013-30977	10175	07-01S-03W	FEE	OW	S
POWELL 2-8A3	43-013-30979	10110	08-01S-03W	FEE	OW	S
TIMOTHY 1-9A3	43-013-30321	9115	09-01S-03W	FEE	OW	TA
CLARK 2-9A3	43-013-30876	9790	09-01S-03W	FEE	OW	P
TEW 1-15A3	43-013-30529	1945	15-01S-03W	FEE	OW	P
YOUNG 2-15A3	43-013-31301	11344	15-01S-03W	FEE	OW	P
JENKINS 3-16A3	43-013-30877	9335	16-01S-03W	FEE	OW	S
TIMOTHY 3-18A3	43-013-30940	9633	18-01S-03W	FEE	OW	P
L R MARSHALL 1-20A3	43-013-30193	9340	20-01S-03W	FEE	OW	S
DUMP 2-20A3	43-013-31505	11757	20-01S-03W	FEE	OW	S
MONSEN 1-21A3	43-013-30082	1590	21-01S-03W	FEE	OW	P
TODD 2-21A3	43-013-31296	11268	21-01S-03W	FEE	OW	P
WHITEHEAD 1-22A3	43-013-30357	1885	22-01S-03W	FEE	OW	P
MONSEN 2-22A3	43-013-31265	11098	22-01S-03W	FEE	OW	P
MONSEN 2-27A3	43-013-31104	1746	27-01S-03W	FEE	OW	P

OPERATOR CHANGES DOCUMENTATION

1. (R649-8-10) Sundry or legal documentation was received from the **FORMER** operator on: 06/19/2001
2. (R649-8-10) Sundry or legal documentation was received from the **NEW** operator on: 06/19/2001
3. The new company has been checked through the **Department of Commerce, Division of Corporations Database on:** 06/21/2001
4. Is the new operator registered in the State of Utah: YES Business Number: 608186-0143

5. If **NO**, the operator was contacted contacted on: N/A

6. **Federal and Indian Lease Wells:** The BLM and or the BIA has approved the (merger, name change, or operator change for all wells listed on Federal or Indian leases on: N/A

7. **Federal and Indian Units:** The BLM or BIA has approved the successor of unit operator for wells listed on: N/A

8. **Federal and Indian Communization Agreements ("CA"):** The BLM or the BIA has approved the operator change for all wells listed involved in a CA on: N/A

9. **Underground Injection Control ("UIC")** The Division has approved UIC Form 5, **Transfer of Authority to Inject,** for the enhanced/secondary recovery unit/project for the water disposal well(s) listed on: N/A

DATA ENTRY:

1. Changes entered in the **Oil and Gas Database on:** 06/26/2001

2. Changes have been entered on the **Monthly Operator Change Spread Sheet on:** 06/26/2001

3. Bond information entered in RBDMS on: 06/20/2001

4. Fee wells attached to bond in RBDMS on: 06/26/2001

STATE BOND VERIFICATION:

1. State well(s) covered by Bond No.: N/A

FEE WELLS - BOND VERIFICATION/LEASE INTEREST OWNER NOTIFICATION:

1. (R649-3-1) The **NEW** operator of any fee well(s) listed has furnished a bond: 400JU0708

2. The **FORMER** operator has requested a release of liability from their bond on: COMPLETION OF OPERATOR CHANGE
   The Division sent response by letter on: N/A

3. (R649-2-10) The **FORMER** operator of the Fee wells has been contacted and informed by a letter from the Division of their responsibility to notify all interest owners of this change on: COMPLETION OF OPERATOR CHANGE

FILMING:

1. All attachments to this form have been **MICROFILMED** on: 8/15/01

FILING:

1. **ORIGINALS/COPIES** of all attachments pertaining to each individual well have been filled in each well file on: _____

COMMENTS: Master list of all wells involved in operator change from Coastal Oil & Gas Corporation to El Paso Production Oil and Gas Company shall be retained in the "Operator Change File".

STATE OF UTAH
DEPARTMENT OF NATURAL RESOURCES
DIVISION OF OIL, GAS AND MINING

FORM 9

SUNDRY NOTICES AND REPORTS ON WELLS

Do not use this form for proposals to drill new wells, significantly deepen existing wells below current bottom-hole depth, reenter plugged wells, or to drill horizontal laterals. Use APPLICATION FOR PERMIT TO DRILL form for such proposals.

5. LEASE DESIGNATION AND SERIAL NUMBER: FEE

6. IF INDIAN, ALLOTTEE OR TRIBE NAME:

7. UNIT or CA AGREEMENT NAME:

1. TYPE OF WELL: OIL WELL ☑ GAS WELL ☐ OTHER

8. WELL NAME and NUMBER: TEW 1-15A3

2. NAME OF OPERATOR: EL PASO PRODUCTION OIL & GAS COMPANY

9. API NUMBER: 4301330529

3. ADDRESS OF OPERATOR: 1339 EL SEGUNDO NE CITY ALBUQUERQUE STATE NM ZIP 87113

PHONE NUMBER: (505) 344-9380

10. FIELD AND POOL, OR WILDCAT: ALTAMONT/BLUEBELL

4. LOCATION OF WELL

FOOTAGES AT SURFACE: 1053' FNL, 1215' FEL

COUNTY: DUCHESNE

QTR/QTR, SECTION, TOWNSHIP, RANGE, MERIDIAN: NENE 15 1S 3W

STATE: UTAH

11. CHECK APPROPRIATE BOXES TO INDICATE NATURE OF NOTICE, REPORT, OR OTHER DATA

TYPE OF SUBMISSION	TYPE OF ACTION		
☐ NOTICE OF INTENT (Submit in Duplicate)	☑ ACIDIZE	☐ DEEPEN	☐ REPERFORATE CURRENT FORMATION
Approximate date work will start:	☐ ALTER CASING	☐ FRACTURE TREAT	☐ SIDETRACK TO REPAIR WELL
	☐ CASING REPAIR	☐ NEW CONSTRUCTION	☐ TEMPORARILY ABANDON
	☐ CHANGE TO PREVIOUS PLANS	☐ OPERATOR CHANGE	☐ TUBING REPAIR
	☐ CHANGE TUBING	☐ PLUG AND ABANDON	☐ VENT OR FLARE
☑ SUBSEQUENT REPORT (Submit Original Form Only)	☐ CHANGE WELL NAME	☐ PLUG BACK	☐ WATER DISPOSAL
Date of work completion:	☐ CHANGE WELL STATUS	☐ PRODUCTION (START/RESUME)	☐ WATER SHUT-OFF
4/8/2005	☐ COMMINGLE PRODUCING FORMATIONS	☐ RECLAMATION OF WELL SITE	☐ OTHER:
	☐ CONVERT WELL TYPE	☐ RECOMPLETE - DIFFERENT FORMATION	

12. DESCRIBE PROPOSED OR COMPLETED OPERATIONS. Clearly show all pertinent details including dates, depths, volumes, etc.

MAINTENANCE 3/26/05 - 4/8/05:

MIRU HES. PUMP 7000 GAL 15% KCL IN 4 STAGES USING 250 BIO-BALLS & ROCK SALT F/ DIVERSION. 1ST BREAK @ 4090 PSI, AVG RATE 19.1 BPM, MAX RATE 31.7 BPM, AVG PRESS 6263 PSI, MAX PRESS 7742 PSI. GOOD BALL ACTION & SOME DIVERSION. ISIP 2557 PSI, 5 MIN 1694 PSI, 10 MIN 373 PSI, 15 MIN 0 PSI. BLED OFF CSG. RDMO HES. RECOVERED 63 BBLS FLUID. EST 5-10% OIL ON LAST 5 RUNS W/ ACID GAS.

TURN OVER TO PRODUCTION 4/8/05.

RECEIVED
APR 22 2005
DIV. OF OIL, GAS & MINING

NAME (PLEASE PRINT) CHERYL CAMERON

TITLE REGULATORY ANALYST

SIGNATURE Cheryl Cameron

DATE 4/20/2005

(This space for State use only)

(5/2000)

(See Instructions on Reverse Side)

FORM 9

STATE OF UTAH
DEPARTMENT OF NATURAL RESOURCES
DIVISION OF OIL, GAS AND MINING

SUNDRY NOTICES AND REPORTS ON WELLS

Do not use this form for proposals to drill new wells, significantly deepen existing wells below current bottom-hole depth, reenter plugged wells, or to drill horizontal laterals. Use APPLICATION FOR PERMIT TO DRILL form for such proposals.

5. LEASE DESIGNATION AND SERIAL NUMBER: FEE
6. IF INDIAN, ALLOTTEE OR TRIBE NAME:
7. UNIT or CA AGREEMENT NAME:
8. WELL NAME and NUMBER: TEW 1-15A3
9. API NUMBER: 4301330529
10. FIELD AND POOL, OR WILDCAT: ALTAMONT

1. TYPE OF WELL: OIL WELL ☑ GAS WELL ☐ OTHER _____

2. NAME OF OPERATOR: EL PASO E&P COMPANY, L.P.

3. ADDRESS OF OPERATOR: 1099 18TH ST, STE 1900 CITY DENVER STATE CO ZIP 80202 PHONE NUMBER: (303) 291-6400

4. LOCATION OF WELL
FOOTAGES AT SURFACE: 1053' FNL, 1215' FEL COUNTY: DUCHESNE
QTR/QTR, SECTION, TOWNSHIP, RANGE, MERIDIAN: NENE 15 1S 3W STATE: UTAH

11. CHECK APPROPRIATE BOXES TO INDICATE NATURE OF NOTICE, REPORT, OR OTHER DATA

TYPE OF SUBMISSION	TYPE OF ACTION		
☐ NOTICE OF INTENT (Submit in Duplicate)	☐ ACIDIZE	☐ DEEPEN	☐ REPERFORATE CURRENT FORMATION
Approximate date work will start:	☐ ALTER CASING	☐ FRACTURE TREAT	☐ SIDETRACK TO REPAIR WELL
	☐ CASING REPAIR	☐ NEW CONSTRUCTION	☐ TEMPORARILY ABANDON
	☐ CHANGE TO PREVIOUS PLANS	☐ OPERATOR CHANGE	☐ TUBING REPAIR
	☐ CHANGE TUBING	☐ PLUG AND ABANDON	☐ VENT OR FLARE
☑ SUBSEQUENT REPORT (Submit Original Form Only)	☐ CHANGE WELL NAME	☐ PLUG BACK	☐ WATER DISPOSAL
Date of work completion:	☐ CHANGE WELL STATUS	☐ PRODUCTION (START/RESUME)	☐ WATER SHUT-OFF
	☐ COMMINGLE PRODUCING FORMATIONS	☐ RECLAMATION OF WELL SITE	☑ OTHER: Surface Meter Commingle
	☐ CONVERT WELL TYPE	☐ RECOMPLETE - DIFFERENT FORMATION	

12. DESCRIBE PROPOSED OR COMPLETED OPERATIONS. Clearly show all pertinent details including dates, depths, volumes, etc.

The referenced well is commingled at surface meter with the Whitehead 1-22A3 API# 43-013-30357 and the Winkler 1-28A3 API# 43-013-30191

NAME (PLEASE PRINT) Rachael Overbey TITLE ENGINEERING TECH
SIGNATURE Rachael Overbey DATE 7/16/2008

(This space for State use only)

RECEIVED
AUG 0 5 2008
DIV. OF OIL, GAS & MINING

(5/2000) (See Instructions on Reverse Side)

FORM 9

STATE OF UTAH
DEPARTMENT OF NATURAL RESOURCES
DIVISION OF OIL, GAS AND MINING

5. LEASE DESIGNATION AND SERIAL NUMBER: FEE

SUNDRY NOTICES AND REPORTS ON WELLS

6. IF INDIAN, ALLOTTEE OR TRIBE NAME:

7. UNIT or CA AGREEMENT NAME:

Do not use this form for proposals to drill new wells, significantly deepen existing wells below current bottom-hole depth, reenter plugged wells, or to drill horizontal laterals. Use APPLICATION FOR PERMIT TO DRILL form for such proposals.

1. TYPE OF WELL: OIL WELL ☑ GAS WELL ☐ OTHER _____

8. WELL NAME and NUMBER: TEW 1-15A3

2. NAME OF OPERATOR: EL PASO E&P COMPANY, L.P.

9. API NUMBER: 4301330529

3. ADDRESS OF OPERATOR: 1099 18TH ST, STE 1900 CITY DENVER STATE CO ZIP 80202

PHONE NUMBER: (303) 291-6417

10. FIELD AND POOL, OR WILDCAT: ALTAMONT

4. LOCATION OF WELL

FOOTAGES AT SURFACE: 1053' FNL, 1215' FEL

COUNTY: DUCHESNE

QTR/QTR, SECTION, TOWNSHIP, RANGE, MERIDIAN: NENE 15 1S 3W

STATE: UTAH

11. CHECK APPROPRIATE BOXES TO INDICATE NATURE OF NOTICE, REPORT, OR OTHER DATA

TYPE OF SUBMISSION	TYPE OF ACTION		
☐ NOTICE OF INTENT (Submit in Duplicate)	☐ ACIDIZE	☐ DEEPEN	☐ REPERFORATE CURRENT FORMATION
Approximate date work will start:	☐ ALTER CASING	☐ FRACTURE TREAT	☐ SIDETRACK TO REPAIR WELL
	☐ CASING REPAIR	☐ NEW CONSTRUCTION	☐ TEMPORARILY ABANDON
	☐ CHANGE TO PREVIOUS PLANS	☐ OPERATOR CHANGE	☐ TUBING REPAIR
	☐ CHANGE TUBING	☐ PLUG AND ABANDON	☐ VENT OR FLARE
☑ SUBSEQUENT REPORT (Submit Original Form Only)	☐ CHANGE WELL NAME	☐ PLUG BACK	☐ WATER DISPOSAL
	☐ CHANGE WELL STATUS	☐ PRODUCTION (START/RESUME)	☐ WATER SHUT-OFF
Date of work completion: 10/29/2009	☐ COMMINGLE PRODUCING FORMATIONS	☐ RECLAMATION OF WELL SITE	☑ OTHER: commingle/measure
	☐ CONVERT WELL TYPE	☐ RECOMPLETE - DIFFERENT FORMATION	

12. DESCRIBE PROPOSED OR COMPLETED OPERATIONS. Clearly show all pertinent details including dates, depths, volumes, etc.

THE SUBJECT WELL AND 1-22A3 (4301330357) UTILIZE SEPARATE TREATERS WITH THEIR OWN ORIFICE METER GAS CHARTS AND THEN SHARE THE SAME GAS SALES METER. THE ORIFICE METER GAS CHARTS AT EACH TREATER ARE FOR ALLOCATION PURPOSES ONLY. OIL & WATER PRODUCTION VOLUMES ARE TAKEN FROM OIL AND WATER METERS WITHIN THE TREATER.

COPY SENT TO OPERATOR
Date: 12.3.2009
Initials: KS

NAME (PLEASE PRINT) MARIE OKEEFE TITLE SR REGULATORY ANALYST

SIGNATURE Marie Okeefe DATE 10/29/2009

(This space for State use only)

APPROVED BY THE STATE OF UTAH DIVISION OF OIL, GAS, AND MINING
DATE: 11/30/09
BY: D. Hill

RECEIVED
NOV 09 2009
DIV. OF OIL, GAS & MINING

(5/2000) (See Instructions on Reverse Side)

Division of Oil, Gas and Mining

OPERATOR CHANGE WORKSHEET (for state use only)

ROUTING
CDW

X - Change of Operator (Well Sold) Operator Name Change/Merger

The operator of the well(s) listed below has changed, effective: **6/1/2012**

FROM: (Old Operator):	**TO:** (New Operator):
N3065- El Paso E&P Company, L.P.	N3850- EP Energy E&P Company, L.P.
1001 Louisiana Street	1001 Louisiana Street
Houston, TX. 77002	Houston, TX. 77002
Phone: 1 (713) 997-5038	Phone: 1 (713) 997-5038

CA No. **Unit:** N/A

WELL NAME	SEC	TWN	RNG	API NO	ENTITY NO	LEASE TYPE	WELL TYPE	WELL STATUS
See Attached List								

OPERATOR CHANGES DOCUMENTATION

Enter date after each listed item is completed

1. (R649-8-10) Sundry or legal documentation was received from the **FORMER** operator on: 6/25/2012
2. (R649-8-10) Sundry or legal documentation was received from the **NEW** operator on: 6/25/2012
3. The new company was checked on the **Department of Commerce, Division of Corporations Database on:** 6/27/2012

4a. Is the new operator registered in the State of Utah: _____ Business Number: 2114377-0181

5a. (R649-9-2)Waste Management Plan has been received on: Yes

5b. Inspections of LA PA state/fee well sites complete on: N/A

5c. Reports current for Production/Disposition & Sundries on: 6/25/2012

6. **Federal and Indian Lease Wells:** The BLM and or the BIA has approved the merger, name change, or operator change for all wells listed on Federal or Indian leases on: BLM N/A BIA Not Received
7. **Federal and Indian Units:**
   The BLM or BIA has approved the successor of unit operator for wells listed on: N/A
8. **Federal and Indian Communization Agreements ("CA"):**
   The BLM or BIA has approved the operator for all wells listed within a CA on: N/A
9. **Underground Injection Control ("UIC")** Division has approved UIC Form 5 Transfer of Authority to **Inject,** for the enhanced/secondary recovery unit/project for the water disposal well(s) listed on: Second Oper Chg

DATA ENTRY:

1. Changes entered in the **Oil and Gas Database on:** 6/29/2012
2. Changes have been entered on the **Monthly Operator Change Spread Sheet on:** 6/29/2012
3. Bond information entered in RBDMS on: 6/29/2012
4. Fee/State wells attached to bond in RBDMS on: 6/29/2012
5. Injection Projects to new operator in RBDMS on: 6/29/2012
6. Receipt of Acceptance of Drilling Procedures for APD/New on: N/A

BOND VERIFICATION:

1. Federal well(s) covered by Bond Number: 103601420
2. Indian well(s) covered by Bond Number: 103601473

3a. (R649-3-1) The **NEW** operator of any state/fee well(s) listed covered by Bond Number 400JU0705

3b. The **FORMER** operator has requested a release of liability from their bond on: N/A

LEASE INTEREST OWNER NOTIFICATION:

4. (R649-2-10) The **NEW** operator of the fee wells has been contacted and informed by a letter from the Division of their responsibility to notify all interest owners of this change on: 6/29/2012

COMMENTS:

Disposal and Injections wells will be moved when UIC 5 is received.

FORM 9

STATE OF UTAH
DEPARTMENT OF NATURAL RESOURCES
DIVISION OF OIL, GAS AND MINING

5. LEASE DESIGNATION AND SERIAL NUMBER: Multiple Leases

SUNDRY NOTICES AND REPORTS ON WELLS

6. IF INDIAN, ALLOTTEE OR TRIBE NAME:

Do not use this form for proposals to drill new wells, significantly deepen existing wells below current bottom-hole depth, reenter plugged wells, or to drill horizontal laterals. Use APPLICATION FOR PERMIT TO DRILL form for such proposals.

7. UNIT or CA AGREEMENT NAME:

1. TYPE OF WELL: OIL WELL ☑ GAS WELL ☐ OTHER _____

8. WELL NAME and NUMBER: See Attached

2. NAME OF OPERATOR: El Paso E&P Company, L.P. Attn: Maria Gomez

9. API NUMBER:

3. ADDRESS OF OPERATOR: 1001 Louisiana CITY Houston STATE TX ZIP 77002 PHONE NUMBER: (713) 997-5038

10. FIELD AND POOL, OR WILDCAT: See Attached

4. LOCATION OF WELL

FOOTAGES AT SURFACE: See Attached

COUNTY:

QTR/QTR, SECTION, TOWNSHIP, RANGE, MERIDIAN:

STATE: UTAH

11. CHECK APPROPRIATE BOXES TO INDICATE NATURE OF NOTICE, REPORT, OR OTHER DATA

TYPE OF SUBMISSION	TYPE OF ACTION		
☑ NOTICE OF INTENT (Submit in Duplicate)	☐ ACIDIZE	☐ DEEPEN	☐ REPERFORATE CURRENT FORMATION
Approximate date work will start:	☐ ALTER CASING	☐ FRACTURE TREAT	☐ SIDETRACK TO REPAIR WELL
	☐ CASING REPAIR	☐ NEW CONSTRUCTION	☐ TEMPORARILY ABANDON
	☐ CHANGE TO PREVIOUS PLANS	☐ OPERATOR CHANGE	☐ TUBING REPAIR
	☐ CHANGE TUBING	☐ PLUG AND ABANDON	☐ VENT OR FLARE
☐ SUBSEQUENT REPORT (Submit Original Form Only)	☐ CHANGE WELL NAME	☐ PLUG BACK	☐ WATER DISPOSAL
Date of work completion:	☐ CHANGE WELL STATUS	☐ PRODUCTION (START/RESUME)	☐ WATER SHUT-OFF
	☐ COMMINGLE PRODUCING FORMATIONS	☐ RECLAMATION OF WELL SITE	☑ OTHER: Change of Name/Operator
	☐ CONVERT WELL TYPE	☐ RECOMPLETE - DIFFERENT FORMATION	

12. DESCRIBE PROPOSED OR COMPLETED OPERATIONS. Clearly show all pertinent details including dates, depths, volumes, etc.

Please be advised that El Paso E&P Company, L.P. (current Operator) has changed names to EP Energy E&P Company, L.P. (new Operator) effective June 1, 2012 and that EP Energy E&P Company, L.P. is considered the new operator of the attached well locations.

EP Energy E&P Company, L.P. is responsible under the terms and conditions of the lease(s) for the operations conducted upon leased lands. Bond coverage is provided by the State of Utah Statewide Blanket Bond No. 400JU0705, Bureau of Land Management Nationwide Bond No. 103601420, and Bureau of Indian Affairs Nationwide Bond No. 103601473.

Frank W. Falleri
Vice President
El Paso E&P Company, L.P.

Frank W. Falleri
Sr. Vice President
EP Energy E&P Company, L.P.

NAME (PLEASE PRINT) Maria S. Gomez TITLE Principal Regulatory Analyst

SIGNATURE Maria S. Gomez DATE 6/22/2012

(This space for State use only)

APPROVED 6/29/2012
Rachel Medina
Division of Oil, Gas and Mining
~~Earlene Russell, Engineering Technician~~
Rachel Medina

RECEIVED
JUN 25 2012
DIV. OF OIL, GAS & MINING

(5/2000) (See Instructions on Reverse Side)

El Paso E1 Company, L.P. (N3065) to EP Energy E1 Company, L.P. (N3850) effective 6/1/2012

Well Name	Sec	TWP	RNG	API Number	Entity	Lease Type	Well Type	Well Status	Conf
DWR 3-17C6	17	030S	060W	4301350070		14204621118	OW	APD	C
LAKEWOOD ESTATES 3-33C6	33	030S	060W	4301350127		1420H621328	OW	APD	C
YOUNG 3-15A3	15	010S	030W	4301350122		FEE	OW	APD	C
WHITING 4-1A2	01	010S	020W	4301350424		Fee	OW	APD	C
EL PASO 4-34A4	34	010S	040W	4301350720		Fee	OW	APD	C
YOUNG 2-2B1	02	020S	010W	4304751180		FEE	OW	APD	C
LAKE FORK RANCH 3-10B4	10	020S	040W	4301350712	18221	Fee	OW	DRL	C
LAKE FORK RANCH 4-26B4	26	020S	040W	4301350714	18432	Fee	OW	DRL	C
LAKE FORK RANCH 4-24B4	24	020S	040W	4301350717	18315	Fee	OW	DRL	C
Cook 4-14B3	14	020S	030W	4301351162	18449	Fee	OW	DRL	C
Peterson 4-22C6	22	030S	060W	4301351163	18518	Fee	OW	DRL	C
Lake Fork Ranch 4-14B4	14	020S	040W	4301351240	99999	Fee	OW	DRL	C
Melesco 4-20C6	20	030S	060W	4301351241	99999	Fee	OW	DRL	C
Peck 3-13B5	13	020S	050W	4301351364	99999	Fee	OW	DRL	C
Jensen 2-9C4	09	030S	040W	4301351375	99999	Fee	OW	DRL	C
El Paso 3-5C4	05	030S	040W	4301351376	18563	Fee	OW	DRL	C
ULT 6-31	31	030S	020E	4304740033		FEE	OW	LA	
OBERHANSLY 2-2A1	02	010S	010W	4304740164		FEE	OW	LA	
DWR 3-15C6	15	030S	060W	4301351433		14-20-H62-4724	OW	NEW	C
Lake Fork Ranch 5-23B4	23	020S	040W	4301350739		Fee	OW	NEW	
Duchesne Land 4-10C5	10	030S	050W	4301351262		Fee	OW	NEW	C
Cabinland 4-9B3	09	020S	030W	4301351374		Fee	OW	NEW	C
Layton 4-2B3	02	020S	030W	4301351389		Fee	OW	NEW	C
Golinski 4-24B5	24	020S	050W	4301351404		Fee	OW	NEW	C
Alba 1-21C4	21	030S	040W	4301351460		Fee	OW	NEW	C
Allison 4-19C5	19	030S	050W	4301351466		Fee	OW	NEW	C
Seeley 4-3B3	03	020S	030W	4301351486		Fee	OW	NEW	C
Allen 4-25B5	25	020S	050W	4301351487		Fee	OW	NEW	C
Hewett 2-6C4	06	030S	040W	4301351489		Fee	OW	NEW	C
Young 2-7C4	07	030S	040W	4301351500		Fee	OW	NEW	C
Brighton 3-31A1E	31	010S	010E	4304752471		Fee	OW	NEW	C
Hamaker 3-25A1	25	010S	010W	4304752491		Fee	OW	NEW	C
Bolton 3-29A1E	29	010S	010E	4304752871		Fee	OW	NEW	C
HORROCKS 5-20A1	20	010S	010W	4301334280	17378	FEE	OW	OPS	C
DWR 3-19C6	19	030S	060W	4301334263	17440	14-20-462-1120	OW	P	
DWR 3-22C6	22	030S	060W	4301334106	17298	14-20-462-1131	OW	P	
DWR 3-28C6	28	030S	060W	4301334264	17360	14-20-462-1323	OW	P	
UTE 1-7A2	07	010S	020W	4301330025	5850	14-20-462-811	OW	P	
UTE 2-17C6	17	030S	060W	4301331033	10115	14-20-H62-1118	OW	P	
WLR TRIBAL 2-19C6	19	030S	060W	4301331035	10250	14-20-H62-1120	OW	P	
CEDAR RIM 10-A-15C6	15	030S	060W	4301330615	6420	14-20-H62-1128	OW	P	
CEDAR RIM 12A	28	030S	060W	4301331173	10672	14-20-H62-1323	OW	P	
UTE-FEE 2-33C6	33	030S	060W	4301331123	10365	14-20-H62-1328	OW	P	
TAYLOR 3-34C6	34	030S	060W	4301350200	17572	1420H621329	OW	P	
BAKER UTE 2-34C6	34	030S	060W	4301332634	14590	14-20-H62-1329	OW	P	
UTE 3-35Z2 K	35	010N	020W	4301331133	10483	14-20-H62-1614	OW	P	
UTE 1-32Z2	32	010N	020W	4301330379	1915	14-20-H62-1702	OW	P	
UTE TRIBAL 1-33Z2	33	010N	020W	4301330334	1851	14-20-H62-1703	OW	P	
UTE 2-33Z2	33	010N	020W	4301331111	10451	14-20-H62-1703	OW	P	
UTE TRIBAL 2-34Z2	34	010N	020W	4301331167	10668	14-20-H62-1704	OW	P	
LAKE FORK RANCH 3-13B4	13	020S	040W	4301334262	17439	14-20-H62-1743	OW	P	
UTE 1-28B4	28	020S	040W	4301330242	1796	14-20-H62-1745	OW	P	
UTE 1-34A4	34	010S	040W	4301330076	1585	14-20-H62-1774	OW	P	
UTE 1-36A4	36	010S	040W	4301330069	1580	14-20-H62-1793	OW	P	
UTE 1-1B4	01	020S	040W	4301330129	1700	14-20-H62-1798	OW	P	
UTE 1-31A2	31	010S	020W	4301330401	1925	14-20-H62-1801	OW	P	

UTE 1-25A3	25	010S	030W	4301330370	1920	14-20-H62-1802	OW	P	
UTE 2-25A3	25	010S	030W	4301331343	11361	14-20-H62-1802	OW	P	
UTE 1-26A3	26	010S	030W	4301330348	1890	14-20-H62-1803	OW	P	
UTE 2-26A3	26	010S	030W	4301331340	11349	14-20-H62-1803	OW	P	
UTE TRIBAL 4-35A3	35	010S	030W	4301350274	18009	1420H621804	OW	P	C
UTE 2-35A3	35	010S	030W	4301331292	11222	14-20-H62-1804	OW	P	
UTE 3-35A3	35	010S	030W	4301331365	11454	14-20-H62-1804	OW	P	
UTE 1-6B2	06	020S	020W	4301330349	1895	14-20-H62-1807	OW	P	
UTE 2-6B2	06	020S	020W	4301331140	11190	14-20-H62-1807	OW	P	
UTE TRIBAL 3-6B2	06	020S	020W	4301350273	18008	14-20-H62-1807	OW	P	C
POWELL 4-19A1	19	010S	010W	4301330071	8302	14-20-H62-1847	OW	P	
COLTHARP 1-27Z1	27	010N	010W	4301330151	4700	14-20-H62-1933	OW	P	
UTE 1-8A1E	08	010S	010E	4304730173	1846	14-20-H62-2147	OW	P	
UTE TRIBE 1-31	31	010N	020W	4301330278	4755	14-20-H62-2421	OW	P	
UTE 1-28B6X	28	020S	060W	4301330510	11165	14-20-H62-2492	OW	P	
RINKER 2-21B5	21	020S	050W	4301334166	17299	14-20-H62-2508	OW	P	
MURDOCK 2-34B5	34	020S	050W	4301331132	10456	14-20-H62-2511	OW	P	
UTE 1-35B6	35	020S	060W	4301330507	2335	14-20-H62-2531	OW	P	
UTE TRIBAL 1-17A1E	17	010S	010E	4304730829	860	14-20-H62-2658	OW	P	
UTE 2-17A1E	17	010S	010E	4304737831	16709	14-20-H62-2658	OW	P	
UTE TRIBAL 1-27A1E	27	010S	010E	4304730421	800	14-20-H62-2662	OW	P	
UTE TRIBAL 1-35A1E	35	010S	010E	4304730286	795	14-20-H62-2665	OW	P	
UTE TRIBAL 1-15A1E	15	010S	010E	4304730820	850	14-20-H62-2717	OW	P	
UTE TRIBAL P-3B1E	03	020S	010E	4304730190	4536	14-20-H62-2873	OW	P	
UTE TRIBAL 1-22A1E	22	010S	010E	4304730429	810	14-20-H62-3103	OW	P	
B H UTE 1-35C6	35	030S	060W	4301330419	10705	14-20-H62-3436	OW	P	
BH UTE 2-35C6	35	030S	060W	4301332790	15802	14-20-H62-3436	OW	P	
MCFARLANE 1-4D6	04	040S	060W	4301331074	10325	14-20-H62-3452	OW	P	
UTE TRIBAL 1-11D6	11	040S	060W	4301330482	6415	14-20-H62-3454	OW	P	
CARSON 2-36A1	36	010S	010W	4304731407	737	14-20-H62-3806	OW	P	
UTE 2-14C6	14	030S	060W	4301330775	9133	14-20-H62-3809	OW	P	
DWR 3-14C6	14	030S	060W	4301334003	17092	14-20-H62-3809	OW	P	
THE PERFECT "10" 1-10A1	10	010S	010W	4301330935	9461	14-20-H62-3855	OW	P	
BADGER-SAM H U MONGUS 1-15A1	15	010S	010W	4301330949	9462	14-20-H62-3860	OW	P	
MAXIMILLIAN-UTE 14-1	14	010S	030W	4301330726	8437	14-20-H62-3868	OW	P	
FRED BASSETT 1-22A1	22	010S	010W	4301330781	9460	14-20-H62-3880	OW	P	
UTE TRIBAL 1-30Z1	30	010N	010W	4301330813	9405	14-20-H62-3910	OW	P	
UTE LB 1-13A3	13	010S	030W	4301330894	9402	14-20-H62-3980	OW	P	
UTE 2-22B6	22	020S	060W	4301331444	11641	14-20-H62-4614	OW	P	
UINTA OURAY 1-1A3	01	010S	030W	4301330132	5540	14-20-H62-4664	OW	P	
UTE 1-6D6	06	040S	060W	4301331696	12058	14-20-H62-4752	OW	P	
UTE 2-11D6	11	040S	060W	4301350179	17667	1420H624801	OW	P	
UTE 1-15D6	15	040S	060W	4301330429	10958	14-20-H62-4824	OW	P	
UTE 2-15D6	15	040S	060W	4301334026	17193	14-20-H62-4824	OW	P	
HILL 3-24C6	24	030S	060W	4301350293	18020	1420H624866	OW	P	C
BARCLAY UTE 2-24C6R	24	030S	060W	4301333730	16385	14-20-H62-4866	OW	P	
BROTHERSON 1-2B4	02	020S	040W	4301330062	1570	FEE	OW	P	
BOREN 1-24A2	24	010S	020W	4301330084	5740	FEE	OW	P	
FARNSWORTH 1-13B5	13	020S	050W	4301330092	1610	FEE	OW	P	
BROADHEAD 1-21B6	21	020S	060W	4301330100	1595	FEE	OW	P	
ASAY E J 1-20A1	20	010S	010W	4301330102	8304	FEE	OW	P	
HANSON TRUST 1-5B3	05	020S	030W	4301330109	1635	FEE	OW	P	
ELLSWORTH 1-8B4	08	020S	040W	4301330112	1655	FEE	OW	P	
ELLSWORTH 1-9B4	09	020S	040W	4301330118	1660	FEE	OW	P	
ELLSWORTH 1-17B4	17	020S	040W	4301330126	1695	FEE	OW	P	
CHANDLER 1-5B4	05	020S	040W	4301330140	1685	FEE	OW	P	
HANSON 1-32A3	32	010S	030W	4301330141	1640	FEE	OW	P	
JESSEN 1-17A4	17	010S	040W	4301330173	4725	FEE	OW	P	

JENKINS 1-1B3	01	020S	030W	4301330175	1790	FEE	OW	P	
GOODRICH 1-2B3	02	020S	030W	4301330182	1765	FEE	OW	P	
ELLSWORTH 1-19B4	19	020S	040W	4301330183	1760	FEE	OW	P	
DOYLE 1-10B3	10	020S	030W	4301330187	1810	FEE	OW	P	
JOS. SMITH 1-17C5	17	030S	050W	4301330188	5510	FEE	OW	P	
RUDY 1-11B3	11	020S	030W	4301330204	1820	FEE	OW	P	
CROOK 1-6B4	06	020S	040W	4301330213	1825	FEE	OW	P	
HUNT 1-21B4	21	020S	040W	4301330214	1840	FEE	OW	P	
LAWRENCE 1-30B4	30	020S	040W	4301330220	1845	FEE	OW	P	
YOUNG 1-29B4	29	020S	040W	4301330246	1791	FEE	OW	P	
GRIFFITHS 1-33B4	33	020S	040W	4301330288	4760	FEE	OW	P	
POTTER 1-2B5	02	020S	050W	4301330293	1826	FEE	OW	P	
BROTHERSON 1-26B4	26	020S	040W	4301330336	1856	FEE	OW	P	
SADIE BLANK 1-33Z1	33	010N	010W	4301330355	765	FEE	OW	P	
POTTER 1-24B5	24	020S	050W	4301330356	1730	FEE	OW	P	
WHITEHEAD 1-22A3	22	010S	030W	4301330357	1885	FEE	OW	P	
CHASEL MILLER 2-1A2	01	010S	020W	4301330360	5830	FEE	OW	P	
ELDER 1-13B2	13	020S	020W	4301330366	1905	FEE	OW	P	
BROTHERSON 2-10B4	10	020S	040W	4301330443	1615	FEE	OW	P	
FARNSWORTH 2-7B4	07	020S	040W	4301330470	1935	FEE	OW	P	
TEW 1-15A3	15	010S	030W	4301330529	1945	FEE	OW	P	
UTE FEE 2-20C5	20	030S	050W	4301330550	4527	FEE	OW	P	
HOUSTON 1-34Z1	34	010N	010W	4301330566	885	FEE	OW	P	
GALLOWAY 1-18B1	18	020S	010W	4301330575	2365	FEE	OW	P	
SMITH 1-31B5	31	020S	050W	4301330577	1955	FEE	OW	P	
LEBEAU 1-34A1	34	010S	010W	4301330590	1440	FEE	OW	P	
LINMAR 1-19B2	19	020S	020W	4301330600	9350	FEE	OW	P	
WISSE 1-28Z1	28	010N	010W	4301330609	905	FEE	OW	P	
POWELL 1-21B1	21	020S	010W	4301330621	910	FEE	OW	P	
HANSEN 1-24B3	24	020S	030W	4301330629	2390	FEE	OW	P	
OMAN 2-4B4	04	020S	040W	4301330645	9125	FEE	OW	P	
DYE 1-25Z2	25	010N	020W	4301330659	9111	FEE	OW	P	
H MARTIN 1-21Z1	21	010N	010W	4301330707	925	FEE	OW	P	
JENSEN 1-29Z1	29	010N	010W	4301330725	9110	FEE	OW	P	
CHASEL 2-17A1 V	17	010S	010W	4301330732	9112	FEE	OW	P	
BIRCHELL 1-27A1	27	010S	010W	4301330758	940	FEE	OW	P	
CHRISTENSEN 2-8B3	08	020S	030W	4301330780	9355	FEE	OW	P	
LAMICQ 2-5B2	05	020S	020W	4301330784	2302	FEE	OW	P	
BROTHERSON 2-14B4	14	020S	040W	4301330815	10450	FEE	OW	P	
MURRAY 3-2A2	02	010S	020W	4301330816	9620	FEE	OW	P	
HORROCKS 2-20A1 V	20	010S	010W	4301330833	8301	FEE	OW	P	
BROTHERSON 2-2B4	02	020S	040W	4301330855	8420	FEE	OW	P	
ELLSWORTH 2-8B4	08	020S	040W	4301330898	2418	FEE	OW	P	
OMAN 2-32A4	32	010S	040W	4301330904	10045	FEE	OW	P	
BELCHER 2-33B4	33	020S	040W	4301330907	9865	FEE	OW	P	
BROTHERSON 2-35B5	35	020S	050W	4301330908	9404	FEE	OW	P	
HORROCKS 2-4A1 T	04	010S	010W	4301330954	9855	FEE	OW	P	
JENSEN 2-29A5	29	010S	050W	4301330974	10040	FEE	OW	P	
UTE 2-34A4	34	010S	040W	4301330978	10070	FEE	OW	P	
CHANDLER 2-5B4	05	020S	040W	4301331000	10075	FEE	OW	P	
BABCOCK 2-12B4	12	020S	040W	4301331005	10215	FEE	OW	P	
BADGER MR BOOM BOOM 2-29A1	29	010S	010W	4301331013	9463	FEE	OW	P	
BLEAZARD 2-18B4	18	020S	040W	4301331025	1566	FEE	OW	P	
BROADHEAD 2-32B5	32	020S	050W	4301331036	10216	FEE	OW	P	
ELLSWORTH 2-16B4	16	020S	040W	4301331046	10217	FEE	OW	P	
RUST 3-4B3	04	020S	030W	4301331070	1576	FEE	OW	P	
HANSON TRUST 2-32A3	32	010S	030W	4301331072	1641	FEE	OW	P	
BROTHERSON 2-11B4	11	020S	040W	4301331078	1541	FEE	OW	P	

HANSON TRUST 2-5B3	05	020S	030W	4301331079	1636	FEE	OW	P	
BROTHERSON 2-15B4	15	020S	040W	4301331103	1771	FEE	OW	P	
MONSEN 2-27A3	27	010S	030W	4301331104	1746	FEE	OW	P	
ELLSWORTH 2-19B4	19	020S	040W	4301331105	1761	FEE	OW	P	
HUNT 2-21B4	21	020S	040W	4301331114	1839	FEE	OW	P	
JENKINS 2-1B3	01	020S	030W	4301331117	1792	FEE	OW	P	
POTTER 2-24B5	24	020S	050W	4301331118	1731	FEE	OW	P	
POWELL 2-13A2 K	13	010S	020W	4301331120	8306	FEE	OW	P	
JENKINS 2-12B3	12	020S	030W	4301331121	10459	FEE	OW	P	
MURDOCK 2-26B5	26	020S	050W	4301331124	1531	FEE	OW	P	
BIRCH 3-27B5	27	020S	050W	4301331126	1783	FEE	OW	P	
ROBB 2-29B5	29	020S	050W	4301331130	10454	FEE	OW	P	
LAKE FORK 2-13B4	13	020S	040W	4301331134	10452	FEE	OW	P	
DUNCAN 3-1A2 K	01	010S	020W	4301331135	10484	FEE	OW	P	
HANSON 2-9B3	09	020S	030W	4301331136	10455	FEE	OW	P	
ELLSWORTH 2-9B4	09	020S	040W	4301331138	10460	FEE	OW	P	
UTE 2-31A2	31	010S	020W	4301331139	10458	FEE	OW	P	
POWELL 2-19A1 K	19	010S	010W	4301331149	8303	FEE	OW	P	
CEDAR RIM 8-A	22	030S	060W	4301331171	10666	FEE	OW	P	
POTTER 2-6B4	06	020S	040W	4301331249	11038	FEE	OW	P	
MILES 2-1B5	01	020S	050W	4301331257	11062	FEE	OW	P	
MILES 2-3B3	03	020S	030W	4301331261	11102	FEE	OW	P	
MONSEN 2-22A3	22	010S	030W	4301331265	11098	FEE	OW	P	
WRIGHT 2-13B5	13	020S	050W	4301331267	11115	FEE	OW	P	
TODD 2-21A3	21	010S	030W	4301331296	11268	FEE	OW	P	
WEIKART 2-29B4	29	020S	040W	4301331298	11332	FEE	OW	P	
YOUNG 2-15A3	15	010S	030W	4301331301	11344	FEE	OW	P	
CHRISTENSEN 2-29A4	29	010S	040W	4301331303	11235	FEE	OW	P	
BLEAZARD 2-28B4	28	020S	040W	4301331304	11433	FEE	OW	P	
REARY 2-17A3	17	010S	030W	4301331318	11251	FEE	OW	P	
LAZY K 2-11B3	11	020S	030W	4301331352	11362	FEE	OW	P	
LAZY K 2-14B3	14	020S	030W	4301331354	11452	FEE	OW	P	
MATTHEWS 2-13B2	13	020S	020W	4301331357	11374	FEE	OW	P	
LAKE FORK 3-15B4	15	020S	040W	4301331358	11378	FEE	OW	P	
STEVENSON 3-29A3	29	010S	030W	4301331376	11442	FEE	OW	P	
MEEKS 3-8B3	08	020S	030W	4301331377	11489	FEE	OW	P	
ELLSWORTH 3-20B4	20	020S	040W	4301331389	11488	FEE	OW	P	
DUNCAN 5-13A2	13	010S	020W	4301331516	11776	FEE	OW	P	
OWL 3-17C5	17	030S	050W	4301332112	12476	FEE	OW	P	
BROTHERSON 2-24 B4	24	020S	040W	4301332695	14652	FEE	OW	P	
BODRERO 2-15B3	15	020S	030W	4301332755	14750	FEE	OW	P	
BROTHERSON 2-25B4	25	020S	040W	4301332791	15044	FEE	OW	P	
CABINLAND 2-16B3	16	020S	030W	4301332914	15236	FEE	OW	P	
KATHERINE 3-29B4	29	020S	040W	4301332923	15331	FEE	OW	P	
SHRINERS 2-10C5	10	030S	050W	4301333008	15908	FEE	OW	P	
BROTHERSON 2-26B4	26	020S	040W	4301333139	17047	FEE	OW	P	
MORTENSEN 4-32A2	32	010S	020W	4301333211	15720	FEE	OW	P	
FERRARINI 3-27B4	27	020S	040W	4301333265	15883	FEE	OW	P	
RHOADES 2-25B5	25	020S	050W	4301333467	16046	FEE	OW	P	
CASE 2-31B4	31	020S	040W	4301333548	16225	FEE	OW	P	
ANDERSON-ROWLEY 2-24B3	24	020S	030W	4301333616	16284	FEE	OW	P	
SPROUSE BOWDEN 2-18B1	18	020S	010W	4301333808	16677	FEE	OW	P	
BROTHERSON 3-11B4	11	020S	040W	4301333904	16891	FEE	OW	P	
KOFFORD 2-36B5	36	020S	050W	4301333988	17048	FEE	OW	P	
ALLEN 3-7B4	07	020S	040W	4301334027	17166	FEE	OW	P	
BOURNAKIS 3-18B4	18	020S	040W	4301334091	17264	FEE	OW	P	
MILES 3-12B5	12	020S	050W	4301334110	17316	FEE	OW	P	
OWL and HAWK 2-31B5	31	020S	050W	4301334123	17388	FEE	OW	P	

OWL and HAWK 4-17C5	17	030S	050W	4301334193	17387	FEE	OW	P	
DWR 3-32B5	32	020S	050W	4301334207	17371	FEE	OW	P	
LAKE FORK RANCH 3-22B4	22	020S	040W	4301334261	17409	FEE	OW	P	
HANSON 3-9B3	09	020S	030W	4301350065	17570	FEE	OW	P	
DYE 2-28A1	28	010S	010W	4301350066	17531	FEE	OW	P	
MEEKS 3-32A4	32	010S	040W	4301350069	17605	FEE	OW	P	
HANSON 4-8B3	08	020S	030W	4301350088	17571	FEE	OW	P	C
LAKE FORK RANCH 3-14B4	14	020S	040W	4301350097	17484	FEE	OW	P	
ALLEN 3-9B4	09	020S	040W	4301350123	17656	FEE	OW	P	
HORROCKS 4-20A1	20	010S	010W	4301350155	17916	FEE	OW	P	
HURLEY 2-33A1	33	010S	010W	4301350166	17573	FEE	OW	P	
HUTCHINS/CHIODO 3-20C5	20	030S	050W	4301350190	17541	FEE	OW	P	
ALLEN 3-8B4	08	020S	040W	4301350192	17622	FEE	OW	P	
OWL and HAWK 3-10C5	10	030S	050W	4301350193	17532	FEE	OW	P	
OWL and HAWK 3-19C5	19	030S	050W	4301350201	17508	FEE	OW	P	
EL PASO 4-29B5	29	020S	050W	4301350208	17934	FEE	OW	P	C
DONIHUE 3-20C6	20	030S	060W	4301350270	17762	FEE	OW	P	
HANSON 3-5B3	05	020S	030W	4301350275	17725	FEE	OW	P	C
SPRATT 3-26B5	26	020S	050W	4301350302	17668	FEE	OW	P	
REBEL 3-35B5	35	020S	050W	4301350388	17911	FEE	OW	P	C
FREEMAN 4-16B4	16	020S	040W	4301350438	17935	Fee	OW	P	C
WILSON 3-36B5	36	020S	050W	4301350439	17936	Fee	OW	P	C
EL PASO 3-21B4	21	020S	040W	4301350474	18123	Fee	OW	P	C
IORG 4-12B3	12	020S	030W	4301350487	17981	Fee	OW	P	C
CONOVER 3-3B3	03	020S	030W	4301350526	18122	Fee	OW	P	C
ROWLEY 3-16B4	16	020S	040W	4301350569	18151	Fee	OW	P	C
POTTS 3-14B3	14	020S	030W	4301350570	18366	Fee	OW	P	C
POTTER 4-27B5	27	020S	050W	4301350571	99999	Fee	OW	P	C
EL PASO 4-21B4	21	020S	040W	4301350572	18152	Fee	OW	P	C
LAKE FORK RANCH 3-26B4	26	020S	040W	4301350707	18270	Fee	OW	P	C
LAKE FORK RANCH 3-25B4	25	020S	040W	4301350711	18220	Fee	OW	P	C
LAKE FORK RANCH 4-23B4	23	020S	040W	4301350713	18271	Fee	OW	P	C
LAKE FORK RANCH 4-15B4	15	020S	040W	4301350715	18314	Fee	OW	P	C
LAKE FORK RANCH 3-24B4	24	020S	040W	4301350716	18269	Fee	OW	P	C
GOLINSKI 1-8C4	08	030S	040W	4301350986	18301	Fee	OW	P	C
J ROBERTSON 1-1B1	01	020S	010W	4304730174	5370	FEE	OW	P	
TIMOTHY 1-8B1E	08	020S	010E	4304730215	1910	FEE	OW	P	
MAGDALENE PAPADOPULOS 1-34A1E	34	010S	010E	4304730241	785	FEE	OW	P	
NELSON 1-31A1E	31	010S	010E	4304730671	830	FEE	OW	P	
ROSEMARY LLOYD 1-24A1E	24	010S	010E	4304730707	840	FEE	OW	P	
H D LANDY 1-30A1E	30	010S	010E	4304730790	845	FEE	OW	P	
WALKER 1-14A1E	14	010S	010E	4304730805	855	FEE	OW	P	
BOLTON 2-29A1E	29	010S	010E	4304731112	900	FEE	OW	P	
PRESCOTT 1-35Z1	35	010N	010W	4304731173	1425	FEE	OW	P	
BISEL GURR 11-1	11	010S	010W	4304731213	8438	FEE	OW	P	
UTE TRIBAL 2-22A1E	22	010S	010E	4304731265	915	FEE	OW	P	
L. BOLTON 1-12A1	12	010S	010W	4304731295	920	FEE	OW	P	
FOWLES 1-26A1	26	010S	010W	4304731296	930	FEE	OW	P	
BRADLEY 23-1	23	010S	010W	4304731297	8435	FEE	OW	P	
BASTIAN 1-2A1	02	010S	010W	4304731373	736	FEE	OW	P	
D R LONG 2-19A1E	19	010S	010E	4304731470	9505	FEE	OW	P	
D MOON 1-23Z1	23	010N	010W	4304731479	10310	FEE	OW	P	
O MOON 2-26Z1	26	010N	010W	4304731480	10135	FEE	OW	P	
LILA D 2-25A1	25	010S	010W	4304731797	10790	FEE	OW	P	
LANDY 2-30A1E	30	010S	010E	4304731895	11127	FEE	OW	P	
WINN P2-3B1E	03	020S	010E	4304732321	11428	FEE	OW	P	
BISEL-GURR 2-11A1	11	010S	010W	4304735410	14428	FEE	OW	P	
FLYING J FEE 2-12A1	12	010S	010W	4304739467	16686	FEE	OW	P	

HARVEST FELLOWSHIP CHURCH 2-14B1	14	020S	010W	4304739591	16546	FEE	OW	P	
OBERHANSLY 3-11A1	11	010S	010W	4304739679	17937	FEE	OW	P	
DUNCAN 2-34A1	34	010S	010W	4304739944	17043	FEE	OW	P	
BISEL GURR 4-11A1	11	010S	010W	4304739961	16791	FEE	OW	P	
KILLIAN 3-12A1	12	010S	010W	4304740226	17761	ML 39760	OW	P	
WAINOCO ST 1-14B1	14	020S	010W	4304730818	1420	ML-24306-A	OW	P	
UTAH ST UTE 1-35A1	35	010S	010W	4304730182	5520	ML-25432	OW	P	
STATE 1-19A4	19	010S	040W	4301330322	9118	ML-27912	OW	P	
FEDERAL 2-28E19E	28	050S	190E	4304732849	12117	UTU-0143512	OW	P	
FEDERAL 1-28E19E	28	050S	190E	4304730175	5680	UTU143512	OW	P	
BLANCHARD 1-3A2	03	010S	020W	4301320316	5877	FEE	OW	PA	
W H BLANCHARD 2-3A2	03	010S	020W	4301330008	5775	FEE	OW	PA	
YACK U 1-7A1	07	010S	010W	4301330018	5795	FEE	OW	PA	
JAMES POWELL 3	13	010S	020W	4301330024	8305	FEE	WD	PA	
BASTIAN 1 (3-7D)	07	010S	010W	4301330026	5800	FEE	OW	PA	
LAMICQ-URRUTY 1-8A2	08	010S	020W	4301330036	5975	FEE	OW	PA	
BLEAZARD 1-18B4	18	020S	040W	4301330059	11262	FEE	OW	PA	
OLSEN 1-27A4	27	010S	040W	4301330064	1565	FEE	OW	PA	
EVANS 1-31A4	31	010S	040W	4301330067	5330	FEE	OW	PA	
HAMBLIN 1-26A2	26	010S	020W	4301330083	2305	FEE	OW	PA	
HARTMAN 1-31A3	31	010S	030W	4301330093	10700	FEE	OW	PA	
FARNSWORTH 1-7B4	07	020S	040W	4301330097	5725	FEE	OW	PA	
POWELL 1-33A3	33	010S	030W	4301330105	4526	FEE	OW	PA	
LOTRIDGE GATES 1-3B3	03	020S	030W	4301330117	1625	FEE	OW	PA	
REMINGTON 1-34A3	34	010S	030W	4301330139	1670	FEE	OW	PA	
ANDERSON 1-28A2	28	010S	020W	4301330150	5895	FEE	OW	PA	
RHOADES MOON 1-35B5	35	020S	050W	4301330155	5270	FEE	OW	PA	
JOHN 1-3B2	03	020S	020W	4301330160	5765	FEE	OW	PA	
SMITH 1-6C5	06	030S	050W	4301330163	5385	FEE	OW	PA	
HORROCKS FEE 1-3A1	03	010S	010W	4301330171	5505	FEE	OW	PA	
WARREN 1-32A4	32	010S	040W	4301330174	9139	FEE	OW	PA	
JENSEN FENZEL 1-20C5	20	030S	050W	4301330177	4730	FEE	OW	PA	
MYRIN RANCH 1-13B4	13	020S	040W	4301330180	4524	FEE	OW	PA	
BROTHERSON 1-27B4	27	020S	040W	4301330185	1775	FEE	OW	PA	
JENSEN 1-31A5	31	010S	050W	4301330186	4735	FEE	OW	PA	
ROBERTSON 1-29A2	29	010S	020W	4301330189	4740	FEE	OW	PA	
WINKLER 1-28A3	28	010S	030W	4301330191	5465	FEE	OW	PA	
CHENEY 1-33A2	33	010S	020W	4301330202	1750	FEE	OW	PA	
J LAMICQ STATE 1-6B1	06	020S	010W	4301330210	5730	FEE	OW	PA	
REESE ESTATE 1-10B2	10	020S	020W	4301330215	5700	FEE	OW	PA	
REEDER 1-17B5	17	020S	050W	4301330218	5460	FEE	OW	PA	
ROBERTSON UTE 1-2B2	02	020S	020W	4301330225	1710	FEE	OW	PA	
HATCH 1-5B1	05	020S	010W	4301330226	5470	FEE	OW	PA	
BROTHERSON 1-22B4	22	020S	040W	4301330227	5935	FEE	OW	PA	
ALLRED 1-16A3	16	010S	030W	4301330232	1780	FEE	OW	PA	
BIRCH 1-35A5	35	010S	050W	4301330233	9116	FEE	OW	PA	
MARQUERITE UTE 1-8B2	08	020S	020W	4301330235	9122	FEE	OW	PA	
BUZZI 1-11B2	11	020S	020W	4301330248	6335	FEE	OW	PA	
SHISLER 1-3B1	03	020S	010W	4301330249	5960	FEE	OW	PA	
TEW 1-1B5	01	020S	050W	4301330264	5580	FEE	OW	PA	
EVANS UTE 1-19B3	19	020S	030W	4301330265	1870	FEE	OW	PA	
SHELL 2-27A4	27	010S	040W	4301330266	1776	FEE	WD	PA	
DYE 1-29A1	29	010S	010W	4301330271	99990	FEE	OW	PA	
VODA UTE 1-4C5	04	030S	050W	4301330283	4530	FEE	OW	PA	
BROTHERSON 1-28A4	28	010S	040W	4301330292	9114	FEE	OW	PA	
MEAGHER 1-4B2	04	020S	020W	4301330313	8402	FEE	OW	PA	
NORLING 1-9B1	09	020S	010W	4301330315	1811	FEE	OW	PA	
S. BROADHEAD 1-9C5	09	030S	050W	4301330316	5940	FEE	OW	PA	

TIMOTHY 1-09A3	09	010S	030W	4301330321	10883	FEE	OW	PA	
BARRETT 1-34A5	34	010S	050W	4301330323	9115	FEE	OW	PA	
MEAGHER TRIBAL 1-9B2	09	020S	020W	4301330325	9121	FEE	OW	PA	
PHILLIPS UTE 1-3C5	03	030S	050W	4301330333	1816	FEE	OW	PA	
ELLSWORTH 1-20B4	20	020S	040W	4301330351	6375	FEE	OW	PA	
LAWSON 1-28A1	28	010S	010W	4301330358	5915	FEE	OW	PA	
AMES 1-23A4	23	010S	040W	4301330375	1901	FEE	OW	PA	
HORROCKS 1-6A1	06	010S	010W	4301330390	5675	FEE	OW	PA	
SHRINE HOSPITAL 1-10C5	10	030S	050W	4301330393	5565	FEE	OW	PA	
GOODRICH 1-18B2	18	020S	020W	4301330397	5485	FEE	OW	PA	
SWD POWELL 3	13	010S	020W	4301330478	10708	FEE	WD	PA	
BODRERO 1-15B3	15	020S	030W	4301330565	4534	FEE	OW	PA	
MOON TRIBAL 1-30C4	30	030S	040W	4301330576	2360	FEE	OW	PA	
DUNCAN 2-9B5	09	020S	050W	4301330719	5440	FEE	OW	PA	
FISHER 1-16A4	16	010S	040W	4301330737	2410	FEE	OW	PA	
URRUTY 2-34A2	34	010S	020W	4301330753	9117	FEE	OW	PA	
GOODRICH 1-24A4	24	010S	040W	4301330760	2415	FEE	OW	PA	
CARL SMITH 2-25A4	25	010S	040W	4301330776	9136	FEE	OW	PA	
ANDERSON 1-A30B1	30	020S	010W	4301330783	9137	FEE	OW	PA	
CADILLAC 3-6A1	06	010S	010W	4301330834	6316	FEE	OW	PA	
MCELPRANG 2-31A1	31	010S	010W	4301330836	8439	FEE	OW	PA	
REESE ESTATE 2-10B2	10	020S	020W	4301330837	2417	FEE	OW	PA	
CLARK 2-9A3	09	010S	030W	4301330876	2416	FEE	OW	PA	
JENKINS 3-16A3	16	010S	030W	4301330877	9790	FEE	OW	PA	
CHRISTENSEN 2-26A5	26	010S	050W	4301330905	10710	FEE	OW	PA	
FORD 2-36A5	36	010S	050W	4301330911	9630	FEE	OW	PA	
MORTENSEN 2-32A2	32	010S	020W	4301330929	9486	FEE	OW	PA	
WILKERSON 1-20Z1	20	010N	010W	4301330942	5452	FEE	OW	PA	
UTE TRIBAL 2-4A3 S	04	010S	030W	4301330950	10230	FEE	OW	PA	
OBERHANSLY 2-31Z1	31	010N	010W	4301330970	9262	FEE	OW	PA	
MORRIS 2-7A3	07	010S	030W	4301330977	9725	FEE	OW	PA	
POWELL 2-08A3	08	010S	030W	4301330979	10175	FEE	OW	PA	
FISHER 2-6A3	06	010S	030W	4301330984	10110	FEE	OW	PA	
JACOBSEN 2-12A4	12	010S	040W	4301330985	10480	FEE	OW	PA	
CHENEY 2-33A2	33	010S	020W	4301331042	10313	FEE	OW	PA	
HANSON TRUST 2-29A3	29	010S	030W	4301331043	5306	FEE	OW	PA	
BURTON 2-15B5	15	020S	050W	4301331044	10205	FEE	OW	PA	
EVANS-UTE 2-17B3	17	020S	030W	4301331056	10210	FEE	OW	PA	
ELLSWORTH 2-20B4	20	020S	040W	4301331090	5336	FEE	OW	PA	
REMINGTON 2-34A3	34	010S	030W	4301331091	1902	FEE	OW	PA	
WINKLER 2-28A3	28	010S	030W	4301331109	4519	FEE	OW	PA	
TEW 2-10B5	10	020S	050W	4301331125	1751	FEE	OW	PA	
LINDSAY 2-33A4	33	010S	040W	4301331141	1756	FEE	OW	PA	
FIELDSTED 2-28A4	28	010S	040W	4301331293	10665	FEE	OW	PA	
POWELL 4-13A2	13	010S	020W	4301331336	11177	FEE	GW	PA	
DUMP 2-20A3	20	010S	030W	4301331505	11691	FEE	OW	PA	
SMITH 2X-23C7	23	030S	070W	4301331634	12382	FEE	D	PA	
MORTENSEN 3-32A2	32	010S	020W	4301331872	11928	FEE	OW	PA	
TODD USA ST 1-2B1	02	020S	010W	4304730167	99998	FEE	OW	PA	
STATE 1-7B1E	07	020S	010E	4304730180	5555	FEE	OW	PA	
BACON 1-10B1E	10	020S	010E	4304730881	5550	FEE	OW	PA	
PARIETTE DRAW 28-44	28	040S	010E	4304731408	4537	FEE	OW	PA	
REYNOLDS 2-7B1E	07	020S	010E	4304731840	4960	FEE	OW	PA	
STATE 2-35A2	35	010S	020W	4301330156	4715	ML-22874	OW	PA	
UTAH STATE L B 1-11B1	11	020S	010W	4304730171	5530	ML-23655	OW	PA	
STATE 1-8A3	08	010S	030W	4301330286	5655	ML-24316	OW	PA	
UTAH FEDERAL 1-24B1	24	020S	010W	4304730220	590	ML-26079	OW	PA	
CEDAR RIM 15	34	030S	060W	4301330383	6395	14-20-462-1329	OW	S	

UTE TRIBAL 2-24C7	24	030S	070W	4301331028	10240	14-20-H62-1135	OW	S	
CEDAR RIM 12	28	030S	060W	4301330344	6370	14-20-H62-1323	OW	S	
CEDAR RIM 16	33	030S	060W	4301330363	6390	14-20-H62-1328	OW	S	
SPRING HOLLOW 2-34Z3	34	010N	030W	4301330234	5255	14-20-H62-1480	OW	S	
EVANS UTE 1-17B3	17	020S	030W	4301330274	5335	14-20-H62-1733	OW	S	
UTE JENKS 2-1-B4 G	01	020S	040W	4301331197	10844	14-20-H62-1782	OW	S	
UTE 3-12B3	12	020S	030W	4301331379	11490	14-20-H62-1810	OW	S	
UTE TRIBAL 9-4B1	04	020S	010W	4301330194	5715	14-20-H62-1969	OW	S	
UTE TRIBAL 2-21B6	21	020S	060W	4301331424	11615	14-20-H62-2489	OW	S	
UTE 1-33B6	33	020S	060W	4301330441	1230	14-20-H62-2493	OW	S	
UTE 2-22B5	22	020S	050W	4301331122	10453	14-20-H62-2509	OW	S	
UTE 1-18B1E	18	020S	010E	4304730969	9135	14-20-H62-2864	OW	S	
LAUREN UTE 1-23A3	23	010S	030W	4301330895	9403	14-20-H62-3981	OW	S	
UTE 2-28B6	28	020S	060W	4301331434	11624	14-20-H62-4622	OW	S	
UTE 1-27B6X	27	020S	060W	4301330517	11166	14-20-H62-4631	OW	S	
UTE 2-27B6	27	020S	060W	4301331449	11660	14-20-H62-4631	OW	S	
CEDAR RIM 10-15C6	15	030S	060W	4301330328	6365	14-20-H62-4724	OW	S	
UTE 5-30A2	30	010S	020W	4301330169	5910	14-20-H62-4863	OW	S	
UTE TRIBAL G-1 (1-24C6)	24	030S	060W	4301330298	4533	14-20-H62-4866	OW	S	
UTE TRIBAL FEDERAL 1-30C5	30	030S	050W	4301330475	665	14-20-H62-4876	OW	S	
SMB 1-10A2	10	010S	020W	4301330012	5865	FEE	OW	S	
KENDALL 1-12A2	12	010S	020W	4301330013	5875	FEE	OW	S	
CEDAR RIM 2	20	030S	060W	4301330019	6315	FEE	OW	S	
URRUTY 2-9A2	09	010S	020W	4301330046	5855	FEE	OW	S	
BROTHERSON 1-14B4	14	020S	040W	4301330051	1535	FEE	OW	S	
RUST 1-4B3	04	020S	030W	4301330063	1575	FEE	OW	S	
MONSEN 1-21A3	21	010S	030W	4301330082	1590	FEE	OW	S	
BROTHERSON 1-10B4	10	020S	040W	4301330110	1614	FEE	OW	S	
FARNSWORTH 1-12B5	12	020S	050W	4301330124	1645	FEE	OW	S	
ELLSWORTH 1-16B4	16	020S	040W	4301330192	1735	FEE	OW	S	
MARSHALL 1-20A3	20	010S	030W	4301330193	9340	FEE	OW	S	
CHRISTMAN BLAND 1-31B4	31	020S	040W	4301330198	4745	FEE	OW	S	
ROPER 1-14B3	14	020S	030W	4301330217	1850	FEE	OW	S	
BROTHERSON 1-24B4	24	020S	040W	4301330229	1865	FEE	OW	S	
BROTHERSON 1-33A4	33	010S	040W	4301330272	1680	FEE	OW	S	
BROTHERSON 1-23B4	23	020S	040W	4301330483	8423	FEE	OW	S	
SMITH ALBERT 2-8C5	08	030S	050W	4301330543	5495	FEE	OW	S	
VODA JOSEPHINE 2-19C5	19	030S	050W	4301330553	5650	FEE	OW	S	
HANSEN 1-16B3	16	020S	030W	4301330617	9124	FEE	OW	S	
BROTHERSON 1-25B4	25	020S	040W	4301330668	9126	FEE	OW	S	
POWELL 2-33A3	33	010S	030W	4301330704	2400	FEE	OW	S	
BROWN 2-28B5	28	020S	050W	4301330718	9131	FEE	OW	S	
EULA-UTE 1-16A1	16	010S	010W	4301330782	8443	FEE	OW	S	
JESSEN 1-15A4	15	010S	040W	4301330817	9345	FEE	OW	S	
R HOUSTON 1-22Z1	22	010N	010W	4301330884	936	FEE	OW	S	
FIELDSTED 2-27A4	27	010S	040W	4301330915	9632	FEE	OW	S	
HANSKUTT 2-23B5	23	020S	050W	4301330917	9600	FEE	OW	S	
TIMOTHY 3-18A3	18	010S	030W	4301330940	9633	FEE	OW	S	
BROTHERSON 2-3B4	03	020S	040W	4301331008	10165	FEE	OW	S	
BROTHERSON 2-22B4	22	020S	040W	4301331086	1782	FEE	OW	S	
MILES 2-35A4	35	010S	040W	4301331087	1966	FEE	OW	S	
ELLSWORTH 2-17B4	17	020S	040W	4301331089	1696	FEE	OW	S	
RUST 2-36A4	36	010S	040W	4301331092	1577	FEE	OW	S	
EVANS 2-19B3	19	020S	030W	4301331113	1777	FEE	OW	S	
FARNSWORTH 2-12B5	12	020S	050W	4301331115	1646	FEE	OW	S	
CHRISTENSEN 3-4B4	04	020S	040W	4301331142	10481	FEE	OW	S	
ROBERTSON 2-29A2	29	010S	020W	4301331150	10679	FEE	OW	S	
CEDAR RIM 2A	20	030S	060W	4301331172	10671	FEE	OW	S	

HARTMAN 2-31A3	31	010S	030W	4301331243	11026	FEE	OW	S	
GOODRICH 2-2B3	02	020S	030W	4301331246	11037	FEE	OW	S	
JESSEN 2-21A4	21	010S	040W	4301331256	11061	FEE	OW	S	
BROTHERSON 3-23B4	23	020S	040W	4301331289	11141	FEE	OW	S	
MYRIN RANCH 2-18B3	18	020S	030W	4301331297	11475	FEE	OW	S	
BROTHERSON 2-2B5	02	020S	050W	4301331302	11342	FEE	OW	S	
DASTRUP 2-30A3	30	010S	030W	4301331320	11253	FEE	OW	S	
YOUNG 2-30B4	30	020S	040W	4301331366	11453	FEE	OW	S	
IORG 2-10B3	10	020S	030W	4301331388	11482	FEE	OW	S	
MONSEN 3-27A3	27	010S	030W	4301331401	11686	FEE	OW	S	
HORROCKS 2-5B1E	05	020S	010E	4304732409	11481	FEE	OW	S	
LARSEN 1-25A1	25	010S	010W	4304730552	815	FEE	OW	TA	
DRY GULCH 1-36A1	36	010S	010W	4304730569	820	FEE	OW	TA	