FILE NOTATIONS

Entered in NID File .....✓.....
Location Map Pinned .....✓.....
Card Indexed .....✓.....

Checked by Chief .PWB.
Approval Letter 8-16-74
Disapproval Letter .....

COMPLETION DATA:

Date Well Completed 5/31/75
OW..✓.. WW..... TA.....
GW..... OS..... PA.....

Location Inspected .....
Bond released
State or Fee Land .....

LOGS FILED

Driller's Log.....
Electric Logs (No.) ..✓.....
..... I..... Dual I Lat..... GR-N..... Micro.....
BHC Sonic GR..... Lat..... MI-L..... Sonic.....
CBLog..... CCLog..... Others.....

Form 9-331 C
(May 1963)

SUBMIT IN TRIPLICATE*
(Other instructions on reverse side)

Form approved.
Budget Bureau No. 42-R1425.

UNITED STATES
DEPARTMENT OF THE INTERIOR
GEOLOGICAL SURVEY

APPLICATION FOR PERMIT TO DRILL, DEEPEN, OR PLUG BACK

1a. TYPE OF WORK
DRILL [X] DEEPEN [ ] PLUG BACK [ ]

b. TYPE OF WELL
OIL WELL [X] GAS WELL [ ] OTHER SINGLE ZONE [X] MULTIPLE ZONE [ ]

2. NAME OF OPERATOR
Shell Oil Company

3. ADDRESS OF OPERATOR
1700 Broadway, Denver, Colorado 80202

4. LOCATION OF WELL (Report location clearly and in accordance with any State requirements.*)
At surface
2230' FNL and 1582' FEL Section 33

At proposed prod. zone

5 Bawne

5. LEASE DESIGNATION AND SERIAL NO.

6. IF INDIAN, ALLOTTEE OR TRIBE NAME
Ute Tribal

7. UNIT AGREEMENT NAME

8. FARM OR LEASE NAME
Ute

9. WELL NO.
1-33Z2

10. FIELD AND POOL, OR WILDCAT
Bluebell

11. SEC., T., R., M., OR BLK. AND SURVEY OR AREA
SW/4 NE/4 Section 33-T1N-R2W, USM

12. COUNTY OR PARISH: Duchesne
13. STATE: Utah

14. DISTANCE IN MILES AND DIRECTION FROM NEAREST TOWN OR POST OFFICE*
Approx 15 miles North of Roosevelt

15. DISTANCE FROM PROPOSED* LOCATION TO NEAREST PROPERTY OR LEASE LINE, FT. (Also to nearest drlg. unit line, if any): 1582' west of nearest lease line

16. NO. OF ACRES IN LEASE: 640

17. NO. OF ACRES ASSIGNED TO THIS WELL: 640

18. DISTANCE FROM PROPOSED LOCATION* TO NEAREST WELL, DRILLING, COMPLETED, OR APPLIED FOR, ON THIS LEASE, FT.: 4500' SE of 1-28Z2 (Ute)

19. PROPOSED DEPTH: 16,200'

20. ROTARY OR CABLE TOOLS: Rotary

21. ELEVATIONS (Show whether DF, RT, GR, etc.)
6029' GL (ungraded)

22. APPROX. DATE WORK WILL START*
8/20/74

23. PROPOSED CASING AND CEMENTING PROGRAM

SIZE OF HOLE	SIZE OF CASING	WEIGHT PER FOOT	SETTING DEPTH	QUANTITY OF CEMENT
17-1/2"	13-3/8"	68#	300'±	Cmt to surface
12-1/4"	9-5/8"	40#	7,000'±	Bottom 2000' plus 400 sx
8-3/4"	7"	26#	12,000'±	Bottom 1500-2000'
6-1/8"	5" liner	18#	TD	Entire liner

Attached are Survey Plat and Summary of Mud System Monitoring Equipment, BOPE and Drilling Fluids.

✓ 2 cc: Utah Oil and Gas Conservation Commission - w/attachments

131-14
DC

IN ABOVE SPACE DESCRIBE PROPOSED PROGRAM: If proposal is to deepen or plug back, give data on present productive zone and proposed new productive zone. If proposal is to drill or deepen directionally, give pertinent data on subsurface locations and measured and true vertical depths. Give blowout preventer program, if any.

24.
SIGNED T. S. Mize TITLE Division Operations Engr. DATE 8/12/74

(This space for Federal or State office use)
PERMIT NO. 43-013-30334 APPROVAL DATE

APPROVED BY TITLE DATE
CONDITIONS OF APPROVAL, IF ANY:

*See Instructions On Reverse Side

Mud System Monitoring Equipment

Equipment will be installed (with derrick floor indicators) and used throughout the period of drilling after setting and cementing intermediate string or upon reaching a depth at which abnormal pressures could occur.

BOP Equipment

300' - TD -- 3-ram type BOP's and 1 bag type
5000 psi working press

Tested when installed. Operative every trip and tested to 5000 psi every 14 days. All information recorded on Tour Sheets and daily drilling wire.

Mud

Surface - 10,000' -- Clear water
Circulate reserve pit
Flocculate as necessary

10,000' - TD ------- Weighted gel chemical

SHELL OIL COMPANY
1700 BROADWAY
DENVER, COLORADO 80202

AUG 12 1974

Mr. G. R. Daniels
8426 Federal Building
Salt Lake City, Utah 84138

Dear Mr. Daniels:

Attached are three copies of an Application for Permit to Drill Well No. 1-33Z2 Bluebell Field, Duchesne County, Utah. Also, attached are copies of a Development Plan for Land Use for this well along with supplemental maps and drawings to describe the plan.

Please contact this office if you have any questions concerning the permit or development plan.

Very truly yours,

L. G. Roark
Division Operations Manager
Rocky Mountain Operations Office

Attachments

DEVELOPMENT PLAN FOR LAND USE
WELL NO. 1-33Z2
BLUEBELL FIELD, DUCHESNE COUNTY, UTAH

1. Existing roads including location of the exit from the main highway.

   The attached map shows the existing roads.

2. Planned access roads.

   The planned access road will be less than 200 feet from the existing road.

3. Location of existing wells.

   There are no known wells within a 1/2 mile radius of the proposed location.

4. Lateral roads to well locations.

   Not applicable

5. Location of tank batteries and flow lines.

   If the well is successful, a tank battery will be located on the drilling location.

6. Location and type of water supply (rivers, creeks, lakes, ponds, wells, etc.)

   Run-off water from a canal 1/4 mile from the location.

7. Methods of handling waste disposal.

   Human waste will be handled with a Porta-Can or an outdoor privy. Trash, garbage, etc. will be disposed of by burning or sanitary land fill.

8. Location of camps.

   No camps are required. A mobile home will be used as an on-site office.

9. Location of airstrips.

   No airstrips necessary.

10. Location of layout to include position of the rig, mud tanks, reserve pit, burn pits, pipe racks, etc.

    The attached plat shows location layout.

11. Plans for restoration of the surface.

    On completion, the pits will be filled, the location leveled, and the unused land reseeded to your specifications.

12. Any other information.

    Mr. C. Grady, Shell Drilling Foreman, plans to meet with a BIA Representative to insure that the location does not result in undue environmental damage.

JAS

SHELL OIL COMPANY

PROPOSED LOCATION LAYOUT 1-33Z2

LOCATED IN

SECTION 33, T1N, R2W, U.S.B.&M.

DUCHESNE COUNTY, UTAH

SCALE 1" = 2000'

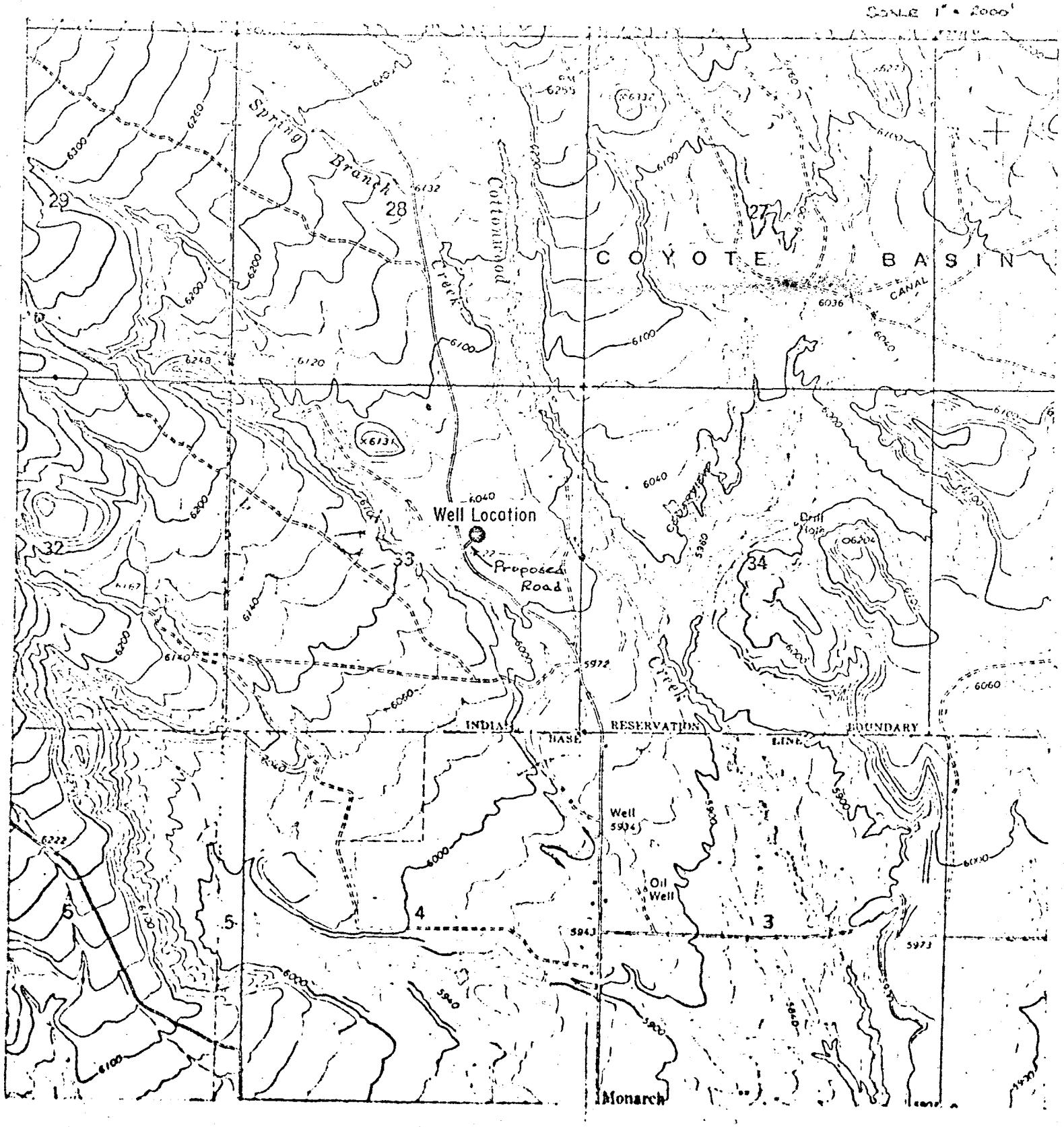

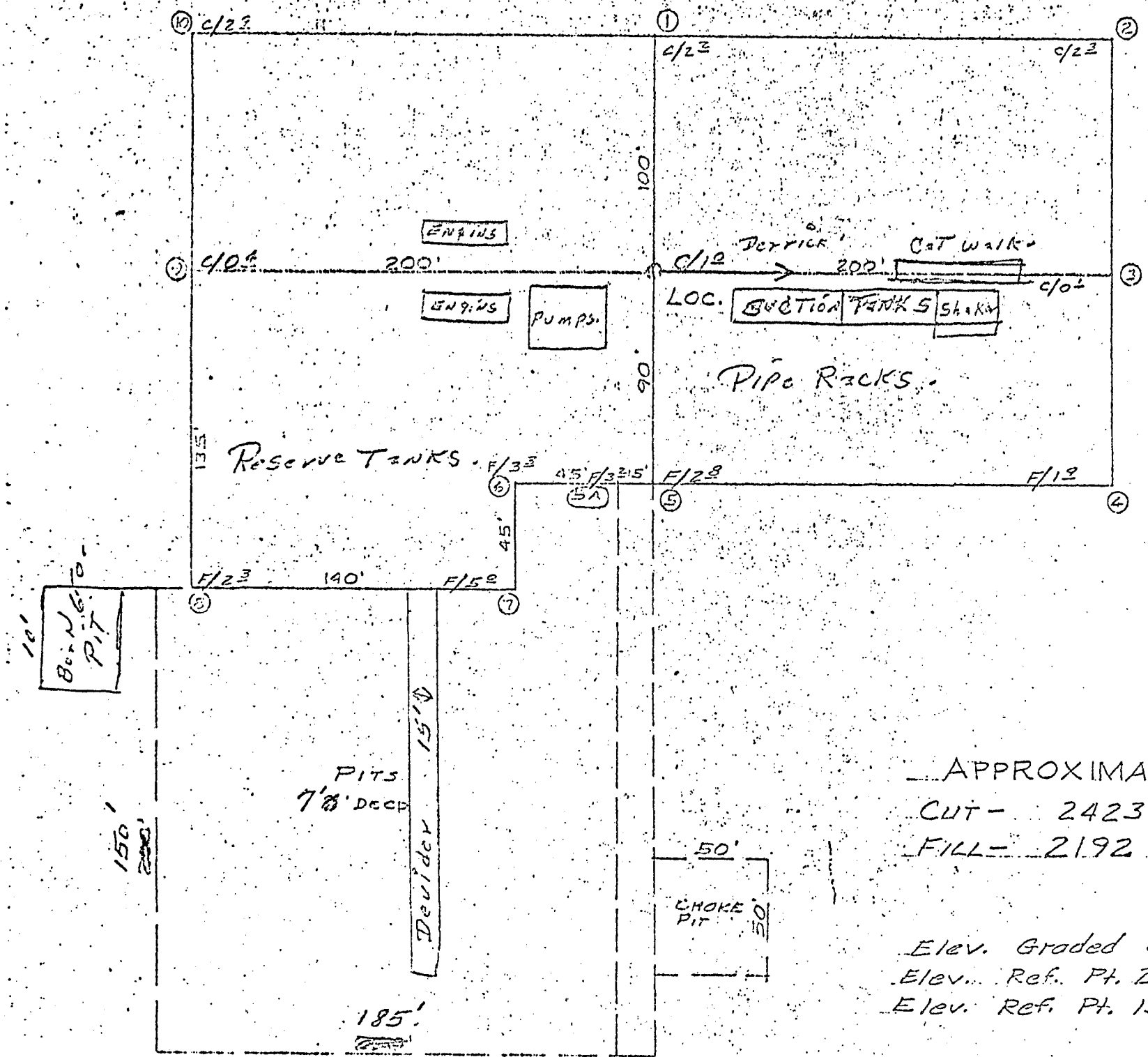

SHELL OIL CO.
1-33 Z2

APPROXIMATE YARDAGE.
CUT - 2423 Cu. Yds.
FILL - 2192 Cu. Yds.

Elev. Graded Ground = 95.7
Elev. Ref. Pt. 200' NW = 100.00
Elev. Ref. Pt. 150' NW = 99.37

Form 9-331 C
(May 1963)

SUBMIT IN TRIPLICATE*
(Other instructions on reverse side)

Form approved.
Budget Bureau No. 42-R1425.

UNITED STATES
DEPARTMENT OF THE INTERIOR
GEOLOGICAL SURVEY

APPLICATION FOR PERMIT TO DRILL, DEEPEN, OR PLUG BACK

1a. TYPE OF WORK: DRILL [X] DEEPEN [ ] PLUG BACK [ ]

b. TYPE OF WELL: OIL WELL [X] GAS WELL [ ] OTHER SINGLE ZONE [X] MULTIPLE ZONE [ ]

2. NAME OF OPERATOR: Shell Oil Company

3. ADDRESS OF OPERATOR: 1700 Broadway, Denver, Colorado 80202

4. LOCATION OF WELL (Report location clearly and in accordance with any State requirements.*)
At surface: 2230' FNL and 1582' FEL Section 33
At proposed prod. zone:

5. LEASE DESIGNATION AND SERIAL NO.:

6. IF INDIAN, ALLOTTEE OR TRIBE NAME: Ute Tribal

7. UNIT AGREEMENT NAME:

8. FARM OR LEASE NAME: Ute

9. WELL NO.: 1-33Z2

10. FIELD AND POOL, OR WILDCAT: Bluebell

11. SEC., T., R., M., OR BLK. AND SURVEY OR AREA: SW/4 NE/4 Section 33-T1N-R2W, USM

12. COUNTY OR PARISH: Duchesne

13. STATE: Utah

14. DISTANCE IN MILES AND DIRECTION FROM NEAREST TOWN OR POST OFFICE*: Approx 15 miles North of Roosevelt

15. DISTANCE FROM PROPOSED* LOCATION TO NEAREST PROPERTY OR LEASE LINE, FT. (Also to nearest drlg. unit line, if any): 1582' west of nearest lease line

16. NO. OF ACRES IN LEASE: 640

17. NO. OF ACRES ASSIGNED TO THIS WELL: 640

18. DISTANCE FROM PROPOSED LOCATION* TO NEAREST WELL, DRILLING, COMPLETED, OR APPLIED FOR, ON THIS LEASE, FT.: 4500' SE of 1-28Z2 (Ute)

19. PROPOSED DEPTH: 16,200'

20. ROTARY OR CABLE TOOLS: Rotary

21. ELEVATIONS (Show whether DF, RT, GR, etc.): 6029' GL (ungraded)

22. APPROX. DATE WORK WILL START*: 8/20/74

23. PROPOSED CASING AND CEMENTING PROGRAM

SIZE OF HOLE	SIZE OF CASING	WEIGHT PER FOOT	SETTING DEPTH	QUANTITY OF CEMENT
17-1/2"	13-3/8"	68#	300'±	Cmt to surface
12-1/4"	9-5/8"	40#	7,000'±	Bottom 2000' plus 400 sx
8-3/4"	7"	26#	12,000'±	Bottom 1500-2000'
6-1/8"	5" liner	18#	TD	Entire liner

Attached are Survey Plat and Summary of Mud System Monitoring Equipment, BOPE and Drilling Fluids.

✓2 cc: Utah Oil and Gas Conservation Commission - w/attachments

IN ABOVE SPACE DESCRIBE PROPOSED PROGRAM: If proposal is to deepen or plug back, give data on present productive zone and proposed new productive zone. If proposal is to drill or deepen directionally, give pertinent data on subsurface locations and measured and true vertical depths. Give blowout preventer program, if any.

24.

SIGNED T. S. Mize TITLE Division Operations Engr. DATE 8/12/74

(This space for Federal or State office use)

PERMIT NO. _____ APPROVAL DATE _____

APPROVED BY _____ TITLE _____ DATE _____

CONDITIONS OF APPROVAL, IF ANY:

*See Instructions On Reverse Side

Mud System Monitoring Equipment

Equipment will be installed (with derrick floor indicators) and used throughout the period of drilling after setting and cementing intermediate string or upon reaching a depth at which abnormal pressures could occur.

BOP Equipment

300' - TD -- 3-ram type BOP's and 1 bag type
5000 psi working press

Tested when installed. Operative every trip and tested to 5000 psi every 14 days. All information recorded on Tour Sheets and daily drilling wire.

Mud

Surface - 10,000' -- Clear water
Circulate reserve pit
Flocculate as necessary

10,000' - TD ------- Weighted gel chemical

PROJECT

SHELL OIL COMPANY

Well location located as shown in the SW 1/4 NE 1/4 Section 33, T1N, R2W, U.S.B.&M. Duchesne County, Utah.

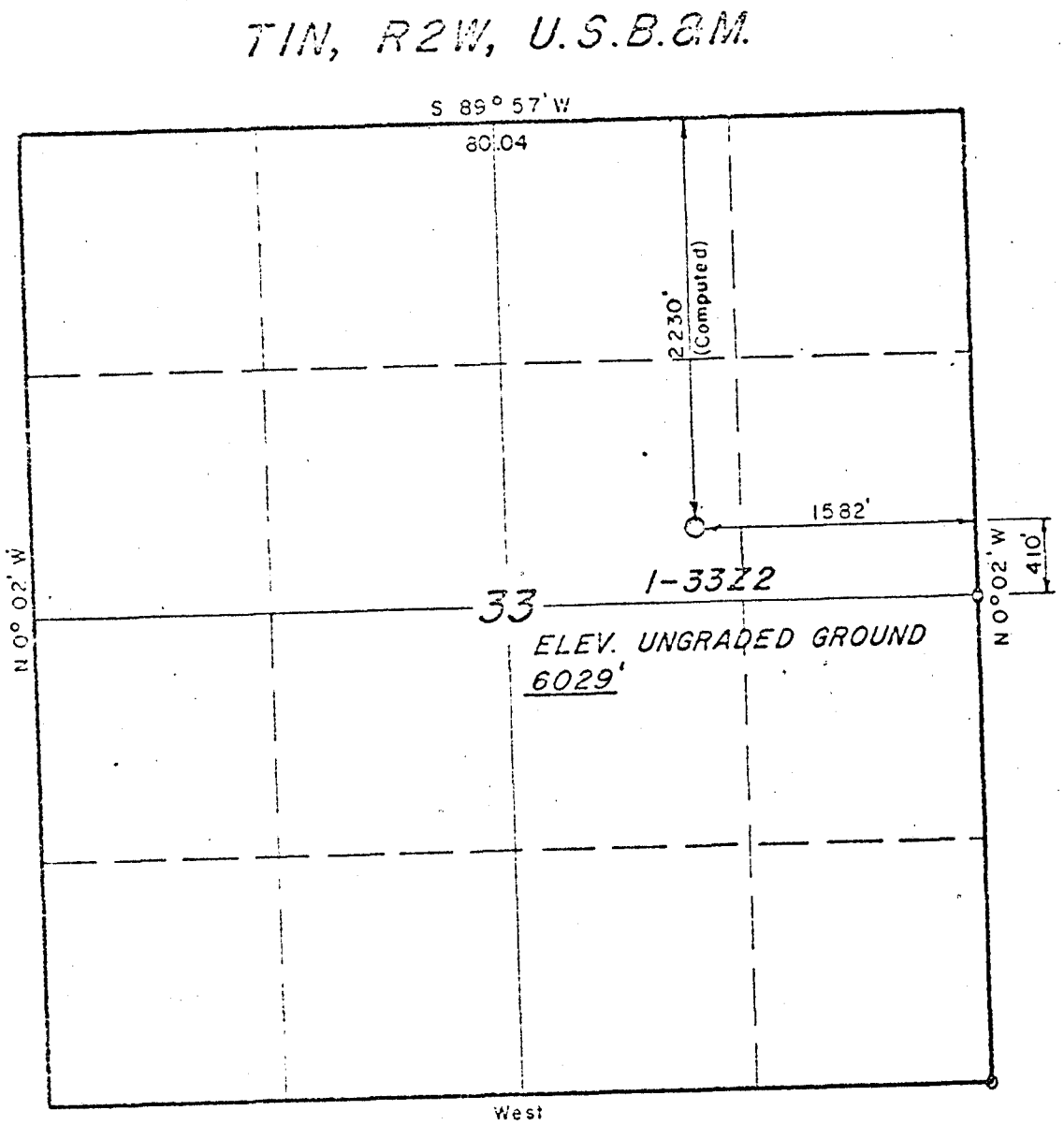

O = Section Corners Located

CERTIFICATE

THIS IS TO CERTIFY THAT THE ABOVE PLAT WAS PREPARED FROM FIELD NOTES OF ACTUAL SURVEYS MADE BY ME OR UNDER MY SUPERVISION AND THAT THE SAME ARE TRUE AND CORRECT TO THE BEST OF MY KNOWLEDGE AND BELIEF.

REGISTERED LAND SURVEYOR
REGISTRATION No 3154
STATE OF UTAH

UINTAH ENGINEERING & LAND SURVEYING
P. O. BOX Q — 110 EAST - FIRST SOUTH
VERNAL, UTAH - 84078

SCALE 1" = 1000'	DATE 7 Feb, 1973
PARTY G.S. H.M.	REFERENCES GLO Plat
WEATHER Fair	FILE SHELL 1973

August 16, 1974

Shell Oil Company
1700 Broadway
Denver, Colorado 80202

Re: Well No. Ute Tribal #1-33X2
Sec. 33, T. 1 N, R. 2 W,
Duchesne County, Utah

Gentlemen:

Insofar as this office is concerned, approval to drill the above referred to well is hereby granted in accordance with the Order issued in Cause No. 131-14.

Should you determine that it will be necessary to plug and abandon this well, you are hereby requested to immediately notify the following:

PAUL W. BURCHELL - Chief Petroleum Engineer
HOME: 277-2890
OFFICE: 328-5771

Enclosed please find Form OGC-8-X, which is to be completed whether or not water sands (aquifers) are encountered during drilling.

Due to the indrease in Utah's drilling activity, and thus well inspections, it is requested that your company notify this Division (801)328-5771, as to your drilling contractor, rig number, toolpusher, and spud date as soon as possible.

The API number assigned to this well is 43-013-30334.

Very truly yours,

DIVISION OF OIL & GAS CONSERVATION

CLEON B. FEIGHT
DIRECTOR

CBF:sw
cc: U.S. Geological Survey

Form 9-330
(Rev. 5-63)

UNITED STATES
DEPARTMENT OF THE INTERIOR
GEOLOGICAL SURVEY

• SUBMIT IN DUPLICATE (See instructions on reverse side)

Form approved.
Budget Bureau No. 42-R355.5.

PI

WELL COMPLETION OR RECOMPLETION REPORT AND LOG*

1a. TYPE OF WELL: OIL WELL [X] GAS WELL [ ] DRY [ ] Other

b. TYPE OF COMPLETION: NEW WELL [XX] WORK OVER [ ] DEEP-EN [ ] PLUG BACK [ ] DIFF. RESVR. [ ] Other

2. NAME OF OPERATOR: Shell Oil Company

3. ADDRESS OF OPERATOR: 1700 Broadway, Denver, Colorado 80202

4. LOCATION OF WELL (*Report location clearly and in accordance with any State requirements*)*
At surface 2230' FNL and 1582' FEL Section 33
At top prod. interval reported below
At total depth

DUPLICATE COPY

5. LEASE DESIGNATION AND SERIAL NO.: Tribal 14-20-H62-1703A
6. IF INDIAN, ALLOTTEE OR TRIBE NAME: Ute Tribal
7. UNIT AGREEMENT NAME:
8. FARM OR LEASE NAME: Ute
9. WELL NO.: 1-33Z2
10. FIELD AND POOL, OR WILDCAT: Bluebell
11. SEC., T., R., M., OR BLOCK AND SURVEY OR AREA: SW/4 NE/4 Section 33-T1N-R2W
12. COUNTY OR PARISH: Duchesne
13. STATE: Utah
14. PERMIT NO. / DATE ISSUED:

15. DATE SPUDDED	16. DATE T.D. REACHED	17. DATE COMPL. (*Ready to prod.*)	18. ELEVATIONS (DF, RKB, RT, GR, ETC.)*	19. ELEV. CASINGHEAD
10/8/74	2/11/75	5/31/75	6057 KB	

20. TOTAL DEPTH, MD & TVD	21. PLUG, BACK T.D., MD & TVD	22. IF MULTIPLE COMPL., HOW MANY*	23. INTERVALS DRILLED BY	ROTARY TOOLS	CABLE TOOLS
16,200	16,095	–	→	Rotary	

24. PRODUCING INTERVAL(S), OF THIS COMPLETION—TOP, BOTTOM, NAME (MD AND TVD)*: Flagstaff

25. WAS DIRECTIONAL SURVEY MADE: –

26. TYPE ELECTRIC AND OTHER LOGS RUN: DIL, CNL/FDC, BHCS-GR/Cal

27. WAS WELL CORED: –

28. CASING RECORD (*Report all strings set in well*)

CASING SIZE	WEIGHT, LB./FT.	DEPTH SET (MD)	HOLE SIZE	CEMENTING RECORD	AMOUNT PULLED
*					

29. LINER RECORD

SIZE	TOP (MD)	BOTTOM (MD)	SACKS CEMENT*	SCREEN (MD)
*				

30. TUBING RECORD

SIZE	DEPTH SET (MD)	PACKER SET (MD)

31. PERFORATION RECORD (*Interval, size and number*)
*

32. ACID, SHOT, FRACTURE, CEMENT SQUEEZE, ETC.

DEPTH INTERVAL (MD)	AMOUNT AND KIND OF MATERIAL USED

33.* PRODUCTION

DATE FIRST PRODUCTION	PRODUCTION METHOD (*Flowing, gas lift, pumping—size and type of pump*)	WELL STATUS (*Producing or shut-in*)
5/31/75	Flowing	Producing

DATE OF TEST	HOURS TESTED	CHOKE SIZE	PROD'N. FOR TEST PERIOD	OIL—BBL.	GAS—MCF.	WATER—BBL.	GAS-OIL RATIO
7/3/75	24	11/64"	→	1108	539	3	486

FLOW. TUBING PRESS.	CASING PRESSURE	CALCULATED 24-HOUR RATE	OIL—BBL.	GAS—MCF.	WATER—BBL.	OIL GRAVITY-API (CORR.)
1800		→	–	–	–	40.0

34. DISPOSITION OF GAS (*Sold, used for fuel, vented, etc.*): To be sold

TEST WITNESSED BY:

35. LIST OF ATTACHMENTS: Well History, Casing & Cementing Details

36. I hereby certify that the foregoing and attached information is complete and correct as determined from all available records

SIGNED J. W. Kimmel TITLE Div. Opers. Engr. DATE 8/14/75

*See Attachments *(See Instructions and Spaces for Additional Data on Reverse Side)

cc: Oil and Gas Conservation Commission w/attachments

OIL WELL

SHELL OIL COMPANY

FROM: 10/9/74 - 7/7/75

LEASE UTE TRIBAL — WELL NO. 1-33Z2 — BLUEBELL

DIVISION WESTERN — ELEV 6057 KB

COUNTY DUCHESNE — STATE UTAH

UTAH

BLUEBELL

Shell-Ute Tribal 1-33Z2 (D) Parker #118 16,200' Wasatch Test KB 6057', GL 6029'	"FR" 100/76/1/100. Drilling. Located 2230' FNL and 1582' FEL, SW/4 NE/4 Section 33-T1N-R2W, Duchesne County, Utah. Elev: 6029 GL (ungraded), 6057 KB (KB to GL = 28') Shell's Working Interest: 100% This well is being drilled for routine development. Spudded 17-1/2" hole at 8:30 PM, 10/8/74. Mud: (.436) 8.4 x 44 OCT - 9 1974
Shell-Ute Tribal 1-33Z2 (D) Parker #118 16,200' Wasatch Test KB 6057', GL 6029'	323/76/2/223. Running csg. Dev: 1 deg at 225 and 1/2 deg at 323. Tripped for bit at 128'. Circ and reamed 1-1/4 hrs. OCT 10 1974
Shell-Ute Tribal 1-33Z2 (D) Parker #118 16,200' Wasatch Test KB 6057', GL 6029' 13-3/8" csg @ 323'	323/76/3/0. WOC. Ran 8 jts (334.97') 13-3/8", 68# K-55 csg and set at 323' w/centralizers at 315.82, 271.87 and 227.87. Cmtd w/400 sx Class "G" w/3% CaCl2. CIP at 3:25 AM, 10/11. Note: could not get csg down. Picked up reamer and reamed btm 60'. Csg went to btm OK. OCT 11 1974 Mud: (.494) 9.5 x 54 x 16.8
Shell-Ute Tribal 1-33Z2 (D) Parker #118 16,200' Wasatch Test KB 6057', GL 6029' 13-3/8" csg @ 323'	10/12: 323/76/4/0. Tearing out BOP. Welded on csg flange and hooked up BOP. Flange out of alignment. 10/13: 323/76/5/0. Drlg cmt. Welded on new CHF, nippled up and tested BOP and csg to 600 psi for 15 min. Tagged cmt 50' from shoe. Mud: (.431) 8.3 x 26 10/14: 390/76/6/67. Tripping in. Dev: 3/4 deg at 390. Down 11-1/2 hrs for rotary table repair. OCT 14 1974 Mud: (.436) 8.4 x 26
Shell-Ute Tribal 1-33Z2 (D) Parker #118 16,200' Wasatch Test KB 6057', GL 6029' 13-3/8" csg @ 323'	1217/76/7/827. Drilling. OCT 15 1974
Shell-Ute Tribal 1-33Z2 (D) Parker #118 16,200' Wasatch Test KB 6057', GL 6029' 13-3/8" csg @ 323'	1822/76/8/605. Tripping for bit. Dev: 3/4 deg at 1276. Changed bit at 1276 and reamed 60' to btm. Mud: (.431) 8.3 x 26 OCT 16 1974
Shell-Ute Tribal 1-33Z2 (D) Parker #118 16,200' Wasatch Test KB 6057', GL 6029' 13-3/8" csg @ 323'	2456/76/9/634. Tripping for fishing tools. Dev: 3/4 deg at 1276 and 1-1/4 deg at 1822. Twisted off losing 34,000#. OCT 17 1974 Mud: (.431) 8.3 x 26

Shell-Ute Tribal 1-33Z2 (D) Parker #118 16,200' Wasatch Test KB 6057', GL 6029' 13-3/8" csg @ 323'	2466/76/10/10. Drilling. Tripped in w/fishing tools and attempted to get over fish at top of btm 7" collar - control ring too small. Tripped for larger control ring and latched onto fish. Chained out and checked collars finding two 7" collars w/cracked boxes. Mud: (.431) 8.3+ x 66 OCT 18 1974
Shell-Ute Tribal 1-33Z2 (D) Parker #118 16,200' Wasatch Test KB 6057', GL 6029' 13-3/8" csg @ 323'	10/19: 3110/76/11/644. Drilling. Mud: (.437) 8.3+ x 26 10/20: 3525/76/12/415. Drilling. Repaired water supply line. Several drilling breaks occurred in past 24 hrs followed by severe lost circ. Difficult to maintain enough water volume to provide clear water for drilling. Mud: (.432) 8.3+ x 26 10/21: 3745/76/13/220. Drilling. Dev: 1-1/2 deg at 3750. Checked DC. Mud: (.431) 8.3+ x 26 OCT 21 1974
Shell-Ute Tribal 1-33Z2 (D) Parker #118 16,200' Wasatch Test KB 6057', GL 6029' 13-3/8" csg @ 323'	3866/76/14/121. Drilling. Dev: 2 deg at 3834. Repaired throttles. Hooked up rotating head, air and blooie line. Aired up water. Reamed 50' to btm. Mud: (.442) 8.5 x 26 OCT 22 1974
Shell-Ute Tribal 1-33Z2 (D) Parker #118 16,200' Wasatch Test KB 6057'. GL 6029' 13-3/8" csg @ 323'	4125/76/15/259. Drilling. Repaired flow line. Mud: (.432) 8.3+ x 26 OCT 23 1974
Shell-Ute Tribal 1-33Z2 (D) Parker #118 16,200' Wasatch Test KB 6057', GL 6029' 13-3/8" csg @ 323'	4242/76/16/117. Drilling. Dev: 1-3/4 deg at 4149. Tripped and checked DC's. After trip lost circ, washed and reamed 110' to bottom. Hole took a lot of water, started air back up. Magnafluxed @ 4149. Mud: (.437) 8.4 x 26 OCT 24 1974
Shell-Ute Tribal 1-33Z2 (D) Parker #118 16,200' Wasatch Test KB 6057', GL 6029' 13-3/8" csg @ 323'	4542/76/17/300. Drilling w/wtr. Mud: (.437) 8.4 x 26 OCT 25 1974
Shell-Ute Tribal 1-33Z2 (D) Parker #118 16,200' Wasatch Test KB 6057', GL 6029' 13-3/8" csg @ 323'	10/26: 4759/76/18/217. Tripping. Magnafluxed DC's. Mud: (.431) 8.3+ x 26 10/27: 4919/76/19/160. Drilling. Dev: 1-1/2 deg at 4759. Magnafluxed DC. Changed out 1 9" DC w/cracked pin. Mud: (.431) 8.3+ x 26 10/28: 5130/76/20/211. Drilling w/wtr. Mud: (.442) 8.5 x 26 OCT 28 1974

Shell-Ute Tribal 1-33Z2 (D) Parker #118 16,200' Wasatch Test KB 6057', GL 6029' 13-3/8" csg @ 323'	5368/76/21/238. Drilling. Mud: (.431) 8.3+ (aerated wtr) OCT 29 1974
Shell-Ute Tribal 1-33Z2 (D) Parker #118 16,200' Wasatch Test KB 6057', GL 6029' 13-3/8" csg @ 323'	5541/76/22/173. Tripping in w/fishing tools. Twisted off at btm of 4th DC down 7". Top of fish at 5024. Left eleven 7" DC's, five 9" DC's, shock sub and three stabilizers in hole. Mud: (.431) 8.3+ x 26 OCT 30 1974
Shell-Ute Tribal 1-33Z2 (D) Parker #118 16,200' Wasatch Test KB 6057', GL 6029' 13-3/8" csg @ 323'	5555/76/23/14. Drilling. Laid down fishing tools and 4 collars (1- 9", 1- 7" w/cracked boxes and 2 damaged w/twist off). Reamed 3-1/2 hrs and resumed drlg. OCT 31 1974 Mud: (.431) 8.3+ x 26
Shell-Ute Tribal 1-33Z2 (D) Parker #118 16,200' Wasatch Test KB 6057', GL 6029' 13-3/8" csg @ 323'	5803/76/24/248. Drilling. Mud: (.431) 8.3+ x 26 NOV 1 1974
Shell-Ute Tribal 1-33Z2 (D) Parker #118 16,200' Wasatch Test KB 6057', GL 6029' 13-3/8" csg @ 323'	11/2: 6014/76/25/211. Drilling. Mud: (.431) 8.3+ x 26 11/3: 6202/76/26/188. Drilling. Mud: (.431) 8.3+ x 26 11/4: 6255/76/27/53. Reaming to btm. Dev: 1-1/4 deg at 6255. Worked stuck pipe 1-1/2 hrs and reamed tight hole 1-1/4 hrs. Tripped out and magnafluxed DC's - found no bad collars. NOV 4 1974 Mud: (.431) 8.3+ x 26
Shell-Ute Tribal 1-33Z2 (D) Parker #118 16,200' Wasatch Test KB 6057', GL 6029' 13-3/8" csg @ 323'	6502/76/28/247. Drilling. Finished reaming back to btm. Resumed drlg, working stuck pipe and reaming tight hole. NOV 5 1974 Mud: (.431) 8.3+ x 26
Shell-Ute Tribal 1-33Z2 (D) Parker #118 16,200' Wasatch Test KB 6057', GL 6029' 13-3/8" csg @ 323'	6766/76/29/264. Drilling. Started mudding up. NOV 6 1974 (.436) 8.4+ x 26

Shell-Ute Tribal 1-33Z2 (D) Parker #118 16,200' Wasatch Test KB 6057', GL 6029' 13-3/8" csg @ 323'	6783/76/30/17. Drilling. Dev: 1-1/4 deg at 6718. Tripped out checking and laying down DC's. Tenth 7" collar down (2nd collar above 9" DC) had cracked box, 6-5/8" OD fish neck x 25-1/2" long body x 2-1/4" ID and fifth 9" collar from btm had cracked pin, 8-5/16" OD fish neck x 31" long body x 8-5/8" OD x 2-7/8" ID. Made 64.23' SLC: 6782.27 = 6718.04. Washed 90' to btm. Mud: (.442) 8.5 x 30 x 32 NOV 7 1974
Shell-Ute Tribal 1-33Z2 (D) Parker #118 16,200' Wasatch Test KB 6057', GL 6029' 13-3/8" csg @ 323'	6913/76/31/130. Drilling. Mud: (.431) 8.3 x 34 x 26 NOV 8 1974
Shell-Ute Tribal 1-33Z2 (D) Parker #118 16,200' Wasatch Test KB 6057', GL 6029' 9-5/8" csg @ 7012'	11/9: 7005/76/32/92. Tripping. Circ 1-1/2 hrs. Mud: (.436) 8.4 x 39 x 18 11/10: 7012/76/33/7. Running csg. Tripped for bit at 7012, washing and reaming 15'. Laid down DC's and started running csg. Mud: (.436) 8.4 x 46 x 16.0 11/11: 7012/76/34/0. Nippling up BOP. Ran 167 jts 36# K-55 LT&C csg w/2 jts above and below of 40# K-55 ST&C (7028.86') setting shoe at 7012, centralizers at 6875.96, 6750.41 and 6628.97, and float at 6920.36. Cmtd 1st stage w/312 sx Lite w/0.2% R-5. Tailed in w/ 226 sx Class "G" w/0.2% R-5. CIP at 3:55 PM, 11/10. After getting on btm while circ w/ rig pump, had leak in cmt head. SD to tighten and attempted to circ again - pump press incr to 800 psi and blew cmt hd off. Laid down top jt and reinstalled cmt hd and welded to csg. Mud: (.447) 8.6 x 41 x 16 NOV 11 1974
Shell-Ute Tribal 1-33Z2 (D) Parker #118 16,200' Wasatch Test KB 6057', GL 6029' 9-5/8" csg @ 7012'	7012/76/35/0. Testing. BOP. Bullheaded 13-3/8 x 9-5/8 annulus w/600 CF BJ Lite. Nippled up BOP and started testing. NOV 18 1974 Mud: (.431) 8.3 x 26
Shell-Ute Tribal 1-33Z2 (D) Parker #118 16,200' Wasatch Test KB 6057', GL 6029' 9-5/8" csg @ 7012'	7037/76/36/25. Tripping for bit. Picked up and magna-fluxed DC's and tripped in hole, drlg float and cmt. Tested csg to 1000 psi, OK. Top of cmt @ 6881. NOV 13 1974 Mud: (.431) 8.3 x 26
Shell-Ute Tribal 1-33Z2 (D) Parker #118 16,200' Wasatch Test KB 6057', GL 6029' 9-5/8" csg @ 7012'	7122/76/37/85. Drilling. Ran in w/new bit, reaming to btm. NOV 14 1974 Mud: (.431) 8.3 x 26

Shell-Ute Tribal 1-33Z2 (D) Parker #118 16,200' Wasatch Test KB 6057', GL 6029' 9-5/8" csg @ 7012	7384/76/38/262. Drilling. Mud: (.431) 8.3 x 26 NOV 15 1974
Shell-Ute Tribal 1-33Z2 (D) Parker #118 16,200' Wasatch Test KB 6057', GL 6029' 9-5/8" csg @ 7012'	11/16: 7592/76/39/208. Tripping for bit. Mud: (.431) 8.3 x 26 11/17: 7780/76/40/188. Drilling. Dev: 3/4 deg at 7592. Checked DC's and subs, OK. Washed 30' to btm. Mud: (.431) 8.3 x 26 NOV 18 1974 11/18: 7977/76/41/197. Tripping for bit. Mud: (.431) 8.3 x 26
Shell-Ute Tribal 1-33Z2 (D) Parker #118 16,200' Wasatch Test KB 6057', GL 6029' 9-5/8" csg @ 7012'	7983/76/42/6. Tripping for mill. Dev: 1-3/4 deg at 7977. Tripped out making 4.5' SLC. Lost 3 cones on trip. Tripped in w/mill and milled on iron - hole appeared to clean up nicely. Made approx 1.5' of new hole when mill press'd up (Kutrite sheared off smoothly). Tripped in w/bit and attempted to get to btm. Got to within 2' of btm and got stuck when trying to rotate or pick up. NOV 19 1974 Mud: (.431) 8.3 x 26
Shell-Ute Tribal 1-33Z2 (D) Parker #118 16,200' Wasatch Test KB 6057', GL 6029' 9-5/8" csg @ 7012'	7984/76/43/1. Tripping out w/mill. Tripped in w/ reverse circ basket and picked up iron. Tripped out rec'g little iron. Tripped in w/mill and milled 3-3/4 hrs, milling 1' of new hole. Mud: (.431) 8.3 x 26 NOV 20 1974
Shell-Ute Tribal 1-33Z2 (D) Parker #118 16,200' Wasatch Test KB 6057', GL 6029' 9-5/8" csg @ 7012'	7984/76/44/0. Running in w/magnet. Finished pulling mill #1. Clnd jk baskets, rec'g 1/2 cup metal. Ran in w/mill #2 and milled on jk 3 hrs (appeared that jk was going above mill in wall of hole). Pulled mill, rec'g trace of jk. Ran in w/magnet and washed and reamed 50' to btm and worked on jk. Chained out rec'g one cone and 2/3 of second cone. NOV 21 1974 Mud: (.431) 8.3 x 26
Shell-Ute Tribal 1-33Z2 (D) Parker #118 16,200' Wasatch Test KB 6057', GL 6029' 9-5/8" csg @ 7012'	7984/76/45/0. Tripping in w/bit. Finished running magnet, working magnet and jk subs 45 min. Pulled out rec'g heel row of two cones. Tripped in w/mill and milled on jk, making 16" new hole. Pulled mill - badly marked on outside. NOV 22 1974 Mud: Wtr
Shell-Ute Tribal 1-33Z2 (D) Parker #118 16,200' Wasatch Test KB 6057', GL 6029' 9-5/8" csg @ 7012'	11/23: 8103/76/46/119. Drilling. Finished in hole w/ new bit, reaming 150' to btm. Tripped for bit at 7996, finding 6 pcs of metal in jk sub. 11/24: 8354/76/47/251. Drilling. 11/25: 8499/76/48/145. Drilling. Dev: 3/4 deg at 8456. Tripped for bit at 8456, reaming 80' to btm. NOV 25 1974 Mud: Wtr

Shell-Ute Tribal 1-33Z2
(D) Parker #118
16,200' Wasatch Test
KB 6057', GL 6029'
9-5/8" csg @ 7012'

8832/76/49/333. Drilling.
Mud: (.431) 8.3 x 26

NOV 26 1974

Shell-Ute Tribal 1-33Z2
(D) Parker #118
16,200' Wasatch Test
KB 6057', GL 6029'
9-5/8" csg @ 7012'

8894/76/50/62. Drilling. Tripped for bit at 8876 and magnafluxed all DC's, OK. Washed and reamed 100' of out-of-gauge hole.
Mud: (.431) 8.3 x 26

NOV 27 1974

Shell-Ute Tribal 1-33Z2
(D) Parker #118
16,200' Wasatch Test
KB 6057', GL 6029'
9-5/8" csg @ 7012'

11/28: 9230/76/51/336. Drilling.
Mud: (.431) 8.3 x 26
11/29: 9455/76/52/225. Drilling. Dev: 3/4 deg at 9293. Tripped for bit at 9293, washing and reaming 20' to btm and circ out gas. Background gas: 15-45 units. Connection gas: 70-75 units. Trip gas: 100 units.
Mud: (.431) 8.3 x 26
11/30: 9875/76/53/420. Drilling. Background gas: 5-10 units. Connection gas: 45 units.
Mud: (.431) 8.3 x 26
12/1: 10,106/76/54/231. Drilling. Dev: 1 deg at 9996. Tripped for bit at 9996, breaking circ at 7000'. Hole giving back twice calculated displacement of DP. After circ btms up at 7000', SIDP press 100 psi. Tripped in and reamed 70' and circ btmd up. Hole making blk oil again while drlg. Background gas: 40-60 units. Connection gas: 250 units. Trip gas: not recorded - agitator plugged.
Mud: (.431) 8.3 x 26
12/2: 10,377/76/55/271. Drilling. Background gas: 125 units.
Mud: (.431) 8.3 x 26

DEC 2 - 1974

Shell-Ute Tribal 1-33Z2
(D) Parker #118
16,200' Wasatch Test
KB 6057', GL 6029'
9-5/8" csg @ 7012'

10,398/76/56/21. Tripping for bit. Checked for flow and circ btm up. Well flwd 96 bbls in 2.5 hrs (primarily formation wtr but w/sufficient gas and oil to mud up). Pulled to 9-5/8" csg shoe and mudded up to 9.4 w/mud cutting back to approx 8.8 from wtr below csg shoe.
Mud: (.488) 9.4 x 40 x 12.6

DEC 3 - 1974

Shell-Ute Tribal 1-33Z2
(D) Parker #118
16,200' Wasatch Test
KB 6057', GL 6029'
9-5/8" csg @ 7012'

10,495/76/57/97. Drilling. Background gas: 7 units. Connection gas: 30 units. Trip gas: 300 units.
Mud: (.468) 9.0 x 40 x 10.0

DEC 4 - 1974

Shell-Ute Tribal 1-33Z2 (D) Parker #118 16,200' Wasatch Test KB 6057', GL 6029' 9-5/8" csg @ 7012'	10,626/76/58/131. Tripping for bit. Background gas: 7 units. Mud: (.468) 9.0 x 36 x 10.4 DEC 5 - 1974
Shell-Ute Tribal 1-33Z2 (D) Parker #118 16,200' Wasatch Test KB 6057', GL 6029' 9-5/8" csg @ 7012'	10,743/76/59/117. Drilling. Dev: 2 deg at 10,626. Trip gas: 22 units, Connection gas: 7 units, Background gas: 3 units. DEC 6 - 1974 Mud: (.468) 9.0 x 39 x 12.4
Shell-Ute Tribal 1-33Z2 (D) Parker #118 16,200' Wasatch Test KB 6057', GL 6029' 9-5/8" csg @ 7012'	12/7: 10,809/76/60/66. Drilling. Dev: 1-3/4 deg at 10,806. Down 2-3/4 hrs for electrical and pump repairs. Background gas: 5 units. Connection gas: 10 units. Trip gas: 93 units. Mud: (.468) 9.0 x 37 x 12.6 12/8: 10,900/76/61/91. Tripping and checking DC's. Magnafluxed all DC's and subs, OK. Background gas: 5 units. Connection gas: 10 units. Fm gas: 140 units. Mud: (.468) 9.0 x 32 x 12.6 12/9: 10,998/76/62/98. Drilling. Tripped in w/new bit at 10,900. Background gas: 8 units. Connection gas: 12 units. Trip gas: 300 units. DEC 9 - 1974 Mud: (.478) 9.2 x 35 x 13.2
Shell-Ute Tribal 1-33Z2 (D) Parker #118 16,200' Wasatch Test KB 6057', GL 6029' 9-5/8" csg @ 7012'	11,079/76/63/81. Washing to btm w/new bit. Mud: (.483) 9.3 x 38 x 11.8 DEC 10 1974
Shell-Ute Tribal 1-33Z2 (D) Parker #118 16,200' Wasatch Test KB 6057', GL 6029' 9-5/8" csg @ 7012'	11,177/76/64/98. Tripping for bit. Mud: (.488) 9.4 x 31 x 12.0 DEC 11 1974
Shell-Ute Tribal 1-33Z2 (D) Parker #118 16,200' Wasatch Test KB 6057', GL 6029' 9-5/8" csg @ 7012'	11,234/76/65/57. Drilling. Dev: 1-1/2 deg at 11,197. Tripped in w/new bit, reaming to btm. Packed swivel. Mud: (.484) 9.3 x 32 x 12.4 DEC 12 1974
Shell-Ute Tribal 1-33Z2 (D) Parker #118 16,200' Wasatch Test KB 6057', GL 6029' 9-5/8" csg @ 7012'	11,344/76/66/110. Drilling. Mud: (.478) 9.2+ x 33 x 12 DEC 13 1974

Shell-Ute Tribal 1-33Z2
(D) Parker #118
16,200' Wasatch Test
KB 6057', GL 6029'
9-5/8" csg @ 7012'

12/14: 11,397/76/67/53. Drilling. Dev: 1-1/2 deg at 11,352.
Mud: (.494) 9.5 x 36 x 11.6
12/15: 11,491/76/68/94. Tripping for new bit.
Mud: (.499) 9.6 x 33 x 11.0
12/16: 11,558/76/69/67. Drilling. Tripped in w/new bit, reaming to btm. Background gas: 7 units.
Mud: (.499) 9.6 x 34 x 8.4

DEC 16 1974

Shell-Ute Tribal 1-33Z2
(D) Parker #118
16,200' Wasatch Test
KB 6057', GL 6029'
9-5/8" csg @ 7012'

11,649/76/70/91. Drilling. Background gas: 6 units. Connection gas: 8 units.
Mud: (.499) 9.6 x 33 x 8.0

DEC 17 1974

Shell-Ute Tribal 1-33Z2
(D) Parker #118
16,200' Wasatch Test
KB 6057', GL 6029'
9-5/8" csg @ 7012'

11,727/76/71/78. Drilling. Background gas: 6 units. Connection gas: 8 units.
Mud: (.494) 9.5 x 33 x 6.2

DEC 18 1974

Shell-Ute Tribal 1-33Z2
(D) Parker #118
16,200' Wasatch Test
KB 6057', GL 6029'
9-5/8" csg @ 7012'

11,761/76/72/34. Drilling. Tripped for new bit at 11,752. Background gas: 6 units. Connection gas: 8 units.
Mud: (.504) 9.7 x 34 x 6.4

DEC 19 1974

Shell-Ute Tribal 1-33Z2
(D) Parker #118
16,200' Wasatch Test
KB 6057', GL 6029'
9-5/8" csg @ 7012'

11,833/76/73/72. Pulling to shoe. Backgrounnd gas: 6 units. Connection gas: 6 units. Drilled 18 hours. Lost all engines but one.
Mud: (.494) 9.5 x 34 x 62

DEC 20 1974

Shell-Ute Tribal 1-33Z2
(D) Parker #118
16,200' Wasatch Test
KB 6057', GL 6029'
9-5/8" csg @ 7012'

12/21: 11,876/76/74/43. Drilling. Down 10-1/2 hrs working on engines. Tripped in and resumed drlg. Background gas: 6 units. Trip gas: 135 units. Connection gas: 8 units.
Mud: (.499) 9.6 x 34 x 5.6
12/22: 11,919/76/75/43. Tripping in w/new bit. Dev: 1 deg at 11,919.
Mud: (.494) 9.5 x 38 x 4.8
12/23: 12,002/76/76/83. Drilling. Background gas: 12 units. Connection gas: 14 units.
Mud: (.504) 9.7 x 34 x 4.4

DEC 23 1974

Shell-Ute Tribal 1-33Z2
(D) Parker #118
16,200' Wasatch Test
KB 6057', GL 6029'
9-5/8" csg @ 7012'

12,034/76/77/34. Drilling. Tripped for new bit at 12,023. Made 23' SLC at 12,000': 11,354.24 = 11,331.24. Background gas: 15 units. Connection gas: 20 units. Trip gas: 150 units.
Mud: (.499) 9.6 x 33 x 4.0

DEC 24 1974

Shell-Ute Tribal 1-33Z2 (D) Parker #118 16,200' Wasatch Test KB 6057', GL 6029' 9-5/8" csg @ 7012'	12/25: 12,145/76/78/111. Drilling. Background gas: 18 units. Connection gas: 25 units. Fm gas: 30 units. Mud: (.509) 9.8 x 38 x 3.4 12/26: 12,221/76/79/76. Drilling. Dev: 1 deg at 12,185. Tripped for new bit at 12,185. Washed to btm. Mud: (.504) 9.7 x 46 x 3.6 DEC 2 6 1974
Shell-Ute Tribal 1-33Z2 (D) Parker #118 16,200' Wasatch Test KB 6057', GL 6029' 9-5/8" csg @ 7012'	12,347/76/80/126. Drilling. Background gas: 15 units. Connection gas: 35 units. Fm gas: 80 units. Mud: (.514) 9.9 x 46 x 3.4 DEC 2 7 1974
Shell-Ute Tribal 1-33Z2 (D) Parker #118 16,200' Wasatch Test KB 6057', GL 6029' 9-5/8" csg @ 7012'	12/28: 12,358/76/81/11. Logging. Dev: 1 deg at 12,358. Tripped out and circ 2 hrs for logs. Ran DIL and CNL/FDC. Mud: (.514) 9.9 x 47 x 3.2 (1% oil) 12/29: 12,358/76/82/0. Laying down DP. Finished logging as follows: BHCS-GR w/cal. Logger's TD 12,374. Mud: (.520) 10.0 x 45 x 3.0 (1% oil) 12/30: 12,358/76/83/0. Running 7" csg. Finished laying down DP and DC's. Broke down kelly and pulled wear bushing. RU csg crew and started running 7". Mud: (.488) 9.4 x 34 x 4.0 DEC 3 0 1974
Shell-Ute Tribal 1-33Z2 (D) Parker #118 16,200' Wasatch Test KB 6057', GL 6029' 7" csg @ 12,358'	12,358/76/84/0. Nippling up BOP. Finished running 7" csg as follows: Ran 278 jts S-95, 26#, LT&C w/FC at 12,216 and shoe at 12,358. Lost mud while running pipe and circ csg. WO mud to displace cmt. Cmtd w/ 425 sx Lite w/0.4% R-5 (12.4 ppg slurry) followed by 417 sx Class "G" w/0.4% R-5 (15.9 ppg slurry). Had 75% returns while cmtg. Lost full returns on last 90 bbls of displacement. Calculated displacement 468 bbls. Used 454 bbls to displace. Circ last 30 min at 2000 psi and finished displacement w/3000 psi. CIP at 6:15 PM. Had gradual bleeding indicating float not holding. Nippled down BOP, set slips, cut off csg and installed flange. Mud: (.530) 10.2 x 41 x 3.9 DEC 3 1 1974
Shell-Ute Tribal 1-33Z2 (D) Parker #118 16,200' Wasatch Test KB 6057', GL 6029' 7" csg @ 12,358'	1/1: 12,358/76/85/0. Changing seals and rubber in preventer. Finished nippling up. Tested spool to 3500 psi. Mud: (.514) 9.9 x 34 x 3.8 1/2: 12,358/76/86/0. RU for DP. Finished working on preventer. Repaired hydraulic lines and tested BOPE, changing out two. Retested and repaired leaks. JAN - 2 1975

Shell-Ute Tribal 1-33Z2
(D) Parker #118
16,200' Wasatch Test
KB 6057', GL 6029'
7" csg @ 12,358'

12,358/76/87/0. Picking up 3-1/2" DP. Finished RU for DC's and DP. Picked up 4-5/8" DC's and 3-1/2" DP.

JAN - 3 1975

Shell-Ute Tribal 1-33Z2
(D) Parker #118
16,200' Wasatch Test
KB 6057', GL 6029'
7" csg @ 12,358'

1/4: 12,360/76/88/2. Tripping in hole. Found top of cmt at 12,213. Tried to unplug std pipe to pump and flowline. CO cmt from 12,213-12,352. Tested csg to 2000 psi. Drld shoe, running on iron. Strapped out for dia bit.
Mud: (.520) 10.0 x 35 x 3.5
1/5: 12,514/76/89/154. Drilling. Background gas: 5 units.
Mud: (.525) 10.1 x 39 x 2.7
1/6: 12,706/76/90/192. Drilling.
Mud: (.530) 10.2 x 42 x 3.9 (1#/bbl LCM)

JAN - 6 1975

Shell-Ute Tribal 1-33Z2
(D) Parker #118
16,200' Wasatch Test
KB 6057', GL 6029'
7" csg @ 12,358'

12,844/76/91/138. Drilling. Stuck 4' off btm at 12,736' while trying to make connection. Worked stuck pipe and reamed tight hole.
Mud: (.535) 10.3+ x 47 x 4.4 (0.6#/bbl LCM)

JAN - 7 1975

Shell-Ute Tribal 1-33Z2
(D) Parker #118
16,200' Wasatch Test
KB 6057', GL 6029'
7" csg @ 12,358'

12,955/76/92/111. Drilling.
Mud: (.525) 10.1 x 37 x 3.8

JAN - 8 1975

Shell-Ute Tribal 1-33Z2
(D) Parker #118
16,200' Wasatch Test
KB 6057', GL 6029'
7" csg @ 12,358'

12,997/76/93/42. Drilling. Tripped for bit at 12,974. Circ and reamed to btm.
Mud: (.535) 10.3+ x 41 x 3.9 (1% oil)

JAN - 9 1975

Shell-Ute Tribal 1-33Z2
(D) Parker #118
16,200' Wasatch Test
KB 6057', GL 6029'
7" csg @ 12,358'

13,175/76/94/178. Drilling.
Mud: (.546) 10.5 x 41 x 3.1 (1% oil)

JAN 10 1975

Shell-Ute Tribal 1-33Z2
(D) Parker #118
16,200' Wasatch Test
KB 6057', GL 6029'
7" csg @ 12,358'

1/11: 13,335/76/95/160. Drilling.
Mud: (.556) 10.7 x 44 x 3.7 (1% oil)
1/12: 13,424/76/96/89. Pulling to shoe. Kelly split just below top connection. Pulled to shoe and broke down in rat hole. Ran back to btm and started drlg. Swivel packing started breaking. Now pulling to shoe to change packing.
Mud: (.566) 10.9 x 45 x 3.5
1/13: 13,539/76/97/115. Drilling. Changed swivel packing and resumed drlg.
Mud: (.572) 11.0 x 43 x 3.5

JAN 13 1975

Shell-Ute Tribal 1-33Z2
(D) Parker #118
16,200' Wasatch Test
KB 6057', GL 6029'
7" csg @ 12,358'

13,702/76/98/163. Drilling.
Mud: (.582) 11.2+ x 46 x 3.6 (1% oil)

JAN 14 1975

Shell-Ute Tribal 1-33Z2
(D) Parker #118
16,200' Wasatch Test
KB 6057', GL 6029'
7" csg @ 12,358'

13,738/76/99/36. Drilling. Drld 3' and lost pump press. Laid down 24 jts S-135 DP and magnafluxed DC's and BHA finding washout in stabilizer box on stab above short DC. Bad DC's from btm of string up, #1 washed pin, #5 cracked box, #7, #8 and #38 cracked box, #34 swelled box. Changed out two stabs and picked up 32 jts newly hard-banded Grade "E" DP on top of DC's.
Mud: (.587) 11.3 x 45 x 3.2 (1% oil)

JAN 15 1975

Shell-Ute Tribal 1-33Z2
(D) Parker #118
16,200' Wasatch Test
KB 6057', GL 6029'
7" csg @ 12,358'

13,956/76/100/218. Drilling. Background gas: 1-2 units.
Mud: (.592) 11.4 x 46 x 3.7 (1% oil)

JAN 16 1975

Shell-Ute Tribal 1-33Z2
(D) Parker #118
16,200' Wasatch Test
KB 6057', GL 6029'
7" csg @ 12,358'

14,137/76/101/181. Drilling. Logged 1-1/2 to 2 units background, connection and fm gas.
Mud: (.598) 11.5 x 46 x 3.9 (1% oil)

JAN 17 1975

Shell-Ute Tribal 1-33Z2
(D) Parker #118
16,200' Wasatch Test
KB 6057', GL 6029'
7" csg @ 12,358'

1/18: 14,212/76/102/75. Magnafluxing DC's. Lost 500 psi pump press. Checked pumps and sfc system - no leaks. Chained out of hole finding washout in box on 8th DC above bit. Started magnafluxing DC's, finding 2 w/cracked boxes, 1 w/washed out box and 1 w/washed out pin (job not completed).
Mud: (.603) 11.6 x 44 x 3.3 (1% oil)
1/19: 14,336/76/103/124. Drilling. Finished magnafluxing DC's - found no add'l washouts or cracks. Tripped in and washed 10' of fill to btm.
Mud: (.608) 11.7+ x 47 x 3.9 (1% oil)
1/20: 14,539/76/104/203. Drilling. Background gas: 2 units. Max gas: 3 units.
Mud: (.618) 11.9 x 52 x 3.7 (1% oil)

JAN 20 1975

Shell-Ute Tribal 1-33Z2
(D) Parker #118
16,200' Wasatch Test
KB 6057', GL 6029'
7" csg @ 12,358'

14,649/76/105/110. Rig SD for electrical repair. Logged drlg break of 280 units gas at 14,641 w/some oil on pits. Last 7 hrs, gas fluctuated from 40 to 200 units. Down 7-1/4 hrs due to electrical problems.
Mud: (.639) 12.3 x 50 x 4.3 (4% oil)

JAN 21 1975

Shell-Ute Tribal 1-33Z2 (D) Parker #118 16,200' Wasatch Test KB 6057', GL 6029' 7" csg @ 12,358'	14,649/76/106/0. SD, WO parts for electrical panel. Down 24 hrs repairing elec system. Gas fluctuated from 100-200 units w/5-10 units background last 6 hrs. Mud: (.670) 12.9+ x 58 x 4.3 (3% oil) JAN 22 1975
Shell-Ute Tribal 1-33Z2 (D) Parker #118 16,200' Wasatch Test KB 6057', GL 6029' 7" csg @ 12,358'	14,810/76/107/161. Drilling. Down 4-1/2 hrs for elec repairs. With 12.9 ppg mud in hole, down 8 min. Pmpd 8 min and made 15-min connection - had 26% incr in flow w/3 bbl incr in pits. Gas fluctuated from 150-285 units for 45 min w/mud cutting from 12.9 ppg to 10.0 ppg w/sli flow. Mudded up to 13.3 ppg w/connection gas at 44 units. Background gas: 3 units. JAN 23 1975 Mud: (.691) 13.3+ x 56 x 3.9 (4% oil)
Shell-Ute Tribal 1-33Z2 (D) Parker #118 16,200' Wasatch Test KB 6057', GL 6029' 7" csg @ 12,358'	14,867/76/108/57. Drilling. Lost circ at 14,848. Logged drlg break, regained returns, and lost circ again at 14,856, logging another drlg break. Sptd another pill and regained circ. Lost total of 400-450 bbls mud. Fm gas: 105 units. JAN 24 1975 Mud: (.691) 13.3 x 56 x 4.3 (6.2#/bbl LCM) (4% oil)
Shell-Ute Tribal 1-33Z2 (D) Parker #118 16,200' Wasatch Test KB 6057', GL 6029' 7" csg @ 12,358'	1/25: 14,968/76/109/101. Drilling. Logged show of 380 units gas w/mud cutting from 13.3 to 10.4 ppg. Circ 2 hrs w/250-340 units gas. Weighted mud to 13.4 ppg w/gas coming back to 250-300 units and decr to 40-100 units w/13.5 ppg mud. Mud: (.707) 13.6 x 53 x 4.3 (5% oil) 1/26: 15,060/76/110/92. Pumping through choke. Drld w/14.6 ppg mud, logging 2-4 min drlg break. Pump down 3 min after break. Circ 40 min and pump down 5 min. Pmpd 16 min. Checked for flow - none. Circ 1-1/2 hrs w/mud cutting fast. Put well on chk at 3 AM w/150 psi annulus press and no DP press. Presently pmpg on chk and proceeding to kill flow w/14.0 ppg mud. Mud: (.738) 14.2 x 57 x 4.3 (7% oil) 1/27: 15,063/76/111/3. Drlg w/low wt and high pump press. On chk w/14.0 ppg mud, circ out CGO. On chk w/ 14.2 ppg mud until 1 PM. Mud cutting from 14.2 to 12.0 ppg w/150-380 units gas and oil and gas in returns. Circ to cond mud to 14.4 ppg w/incr in flow. Clnd up mud w/gas presently at 15-20 units. Circ off btm w/28-30 units gas w/background of 15-20 units. Mud: (.748) 14.4 x 53 x 4.1 (7.5#/bbl LCM) (6% oil) JAN 27 1975
Shell-Ute Tribal 1-33Z2 (D) Parker #118 16,200' Wasatch Test KB 6057', GL 6029' 7" csg @ 12,358'	15,167/76/112/104. Drilling. Background gas: 4-10 units. Connection gas: 350 units. Formation gas: 34 units. Mud: (.754) 14.5 x 62 x 3.7 (5.3#/bbl LCM) (5% oil) JAN 28 1975

Shell-Ute Tribal 1-33Z2 (D) Parker #118 16,200' Wasatch Test KB 6057', GL 6029' 7" csg @ 12,358'	15,269/76/113/102. Drilling. Lost mud at rate of 8-12 B/H. Sptd 150 bbl pill w/25 sx med and 15 sx fine walnut hulls and circ w/very little loss. Present loss approx 4-6 B/H. Lost total of 150 bbls mud last 24 hrs. Background gas: 5-10 units. Connection gas: 145 units. Downtime gas (1 hr while sptg pill): 320 units. Mud: (.754) 14.5 x 53 x 3.0 (8.9#/bbl LCM) (4% oil) JAN 29 197
Shell-Ute Tribal 1-33Z2 (D) Parker #118 16,200' Wasatch Test KB 6057', GL 6029' 7" csg @ 12,358'	15,379/76/114/110. Drilling. Lost approx 150 bbls mud last 24 hrs. Bit torquing. Background gas: 25 units. Connection gas: 140 units. JAN 30 1975 Mud: (.754) 14.5 x 45 x 3.9 (13.3#/bbl LCM) (3% oil)
Shell-Ute Tribal 1-33Z2 (D) Parker #118 16,200' Wasatch Test KB 6057', GL 6029' 7" csg @ 12,358'	15,401/76/115/22. Changing out DP. Pmpd pill and pulled out, laying down 15 jts DP (some worn and some bent). Magnafluxed DC's finding 10 cracked DC's and 1 cracked stab. Lost 100 bbls mud last 24 hrs w/hole taking 67 bbls extra on trip. Mud: (.754) 14.5 x 46 x 2.7 (4.3#/bbl LCM) (2% oil) JAN 31 1975
Shell-Ute Tribal 1-33Z2 (D) Parker #118 16,200' Wasatch Test KB 6057', GL 6029' 7" csg @ 12,358'	2/1: 15,401/76/116/0. Picking up DP. Lost 100 bls mud while changing out pipe. 2/2: 15,428/76/117/11 (16' SLC). Drilling. 21 hrs working and CO tight spot. CO 14,940-15,401. Background gas: 20 units. High trip gas: 62 units. Mud: (.754) 14.5 x 53 x 4 (9.1#/bbl LCM) 2/3: 15,553/76/118/125. Drilling. Lost 60 bbls mud. Background gas: 16 units. Formation gas: 33 units. Mud: (.749) 14.4 x 42 x 3.1 (8#/bbl LCM) FEB 3 1975
Shell-Ute Tribal 1-33Z2 (D) Parker #118 16,200' Wasatch Test KB 6057', GL 6029' 7" csg @ 12,358'	15,625/76/119/72. Drilling. 20-1/4 hrs drlg. Lost approx. 160 bbls mud last 24 hrs. Background gas: 18 units. Connection gas: 350 units. Formation gas: 90 units. FEB 4 1975 Mud: (.754) 14.5+ x 46 x 2.3 (8.1#/bbl LCM) (3% oil)
Shell-Ute Tribal 1-33Z2 (D) Parker #118 16,200' Wasatch Test KB 6057', GL 6029' 7" csg @ 12,358'	15,736/76/120/111. Drilling. Lost approx. 45 bbls mud last 24 hrs. Background gas: 65 units. Connection gas: 330 units. Formation gas: 320 units. Mud: (.754) 14.5+ x 46 x 2.2 (9.8#/bbl LCM) (3% oil) FEB 5 1975
Shell-Ute Tribal 1-33Z2 (D) Parker #118 16,200' Wasatch Test KB 6057', GL 6029' 7" csg @ 12,358'	15,846/76/121/110. Drilling. Lost 130 bbls mud last 24 hrs. Background gas: 3-5 units. Connection gas: 46 units. Mud: (.754) 14.5+ x 47 x 2.5 (2% oil) FEB 6 1975

Shell-Ute Tribal 1-33Z2
(D) Parker #118
16,200' Wasatch Test
KB 6057', GL 6029'
7" csg @ 12,358'

15,938/76/122/92. Drilling. Lost approx. 80 bbls mud. Connection gas: 330 units. Downtime gas: 340 units. Background gas: 15 units. Formation gas: 28 units.
Mud: (.754) 14.5+ x 49 x 2.4 (10.2#/bbl LCM) (2% oil)

FEB 7 1975

Shell-Ute Tribal 1-33Z2
(D) Parker #118
16,200' Wasatch Test
KB 6057', GL 6029'
7" csg @ 12,358'

2/8: 16,040/76/123/102. Drilling. Lost approx. 75 bbls mud last 24 hrs. Background gas: 60-70 units. Connection gas: 360 units.
Mud: (.759) 14.6 x 52 x 1.8 (10.4#/bbl LCM) (2% oil)
2/9: 16,148/76/124/108. Drilling. Lost 60 bbls mud last 24 hrs. Background gas: 50 units. Connection gas: 210 units.
Mud: (.759) 14.6 x 47 x 2.6 (8.2#/bbl LCM) (2% oil)
2/10: 16,200/76/125/52. Prep to log. 11-1/2 hrs drlg. 5-3/4 hrs circ & cond. Drlg break @ 16,182 - 6' w/a rise of 5 units of gas from 27-32 units. Gas on short trip w/high of 280 units for 10 mins. Lost 50 bbls last 24 hrs.
Mud: (.759) 14.6+ x 50 x 3.1 (8.9#/bbl LCM) (2% oil)

FEB 10 1975

Shell-Ute Tribal 1-33Z2
(D) Parker #118
16,200' Wasatch Test
KB 6057', GL 6029'
7" csg @ 12,358'

16,200/76/126/0. Running csg caliper. 6-1/4 hrs tripping. 16-3/4 hrs logging. Ran logs as follows: Temperature Log, DIL/FDC/CNL/BHC/Sonic.
Mud: (.759) 14.6 x 50 x 3.1 (8.9#/bbl LCM) (2% oil)

FEB 11 1975

Shell-Ute Tribal 1-33Z2
(D) Parker #118
16,200' Wasatch Test
KB 6057', GL 6029'
7" csg @ 12,358'

16,200/76/127/0. Prep to run liner. 11-1/2 hrs circ & cond'g hole. 4 hrs trip'g to pick up liner.
Mud: (.759) 14.6+ x 55 x 2.9 (7.7#/bbl LCM) (2% oil)

FEB 12 1975

Shell-Ute Tribal 1-33Z2
(D) Parker #118
16,200' Wasatch Test
KB 6057', GL 6029'
7" csg @ 12,358'

16,200/76/128/0. WOC. Cmt'd 105 jts (4,074.73') 18# JL95 SFJP 5" liner w/940 sx Class "G" w/2% gel, 30% silica flour, 1.5% D-31. Btm of shoe 16,196, liner hanger @ 12,109'. F.C. @ 16,074. Lost 40 bbls mud last 24 hrs.
Mud: (.754) 14.5+ x 45 x 2.7 (7.3#/bbl LCM) (2% oil) FEB 13 1975

Shell-Ute Tribal 1-33Z2
(D) Parker #118
16,200' Wasatch Test
KB 6057', GL 6029'
7" csg @ 12,358'

16,200/76/129/0. Running Dia-Log. 4-1/4 hrs WOC. 3-3/4 hrs going in hole. Tagged cmt top @ 11,593'. Attempted to unplug bit. Stuck. 7-1/4 hrs rigging up to run Dia-Log. First run went to 11,220' - got to 11,356'. Attempted to run free point again - tool failed. Top DC free.

FEB 14 1975

Shell-Ute Tribal 1-33Z2
(D) Parker #118
16,200' Wasatch Test
KB 6057', GL 6029'
7" csg @ 12,358'

2/15: 16,200/76/130/0. Rigging up Dia-Log. Ran free point & backed off @ 11,333'. Recovering 4 DC's. Left 8 DC's, scraper & mill. Fish plugged @ 11,353'.
Mud: (.749) 14.4 x 32 x 3.3 (7.3#/bbl LCM) (2% oil)
2/16: 16,200/76/131/0. Prep to back off fish. RU & ran Dia-Log, unable to get below 11,353. Backed off @ 11,333 leaving bit, scraper, crossover & 8 DC's in hole. Trip in hole w/Dia-Log. Screwed into fish & RU Dia-Log. Unable to go deeper. POOH.
Mud: (.749) 14.4 x 44 x 3.1 (6.9#/bbl LCM) (2% oil) FEB 18 1975
2/17: 16,200/76/132/0. Going in hole w/wash pipe. Ran collar locator & backed off fish 11,333. Ran wash pipe & washed over fish 11,333-11,431. Never took weight - no torque. POOH & picked up 5 more jts of wash pipe (252 total length of wash pipe).
Mud: (.745) 14.5 x 46 x 2.7 (6.7#/bbl LCM) (2% oil)
2/18: 16,200/76/133/0. Washing over fish.
Mud: (.749) 14.4 x 45 x 12.9 (6.5#/bbl LCM) (2% oil)
FEB 18 1975

Shell-Ute Tribal 1-33Z2
(D) Parker #118
16,200' Wasatch Test
KB 6057', GL 6029'
7" csg @ 12,358'
5" csg @ 16,196'

16,200/76/134/0. Tripping in w/back off tool. 14-1/4 hrs tripping. 7-3/4 hrs milling & washing over fish.
Mud: (.744) 14.3 x 45 x 2.5 (5.2#/bbl LCM) (2% oil)
FEB 19 1975

Shell-Ute Tribal 1-33Z2
(D) Parker #118
16,200' Wasatch Test
KB 6057', GL 6029'
7" csg @ 12,358'
5" csg @ 16,196'

16,200/76/135/0. Going in hole w/wash pipe. 3 hrs changing out tools. 3 hrs trying to back off. 17 hrs tripping. Made two trips w/reversing back off tools w/no results. Seemed to get a good bite, but kept slipping off.
Mud: (.749) 14.4 x 42 x 2.7 (5.1#/bbl LCM) (2% oil)
FEB 20 1975

Shell-Ute Tribal 1-33Z2
(D) Parker #118
16,200' Wasatch Test
KB 6057', GL 6029'
7" csg @ 12,358'
5" csg @ 16,196'

16,200/76/136/0. Milling. 15-3/4 hrs trip'g. 1-3/4 hrs trying to get over fish. 3-1/2 hrs drlg over fish. (Cutting on iron from 11,442-11,444). Ran Mill #3 (flat btm).
Mud: (.754) 14.5 x 53 x 2.1 (5.1#/bbl LCM) (2% oil) FEB 21 1975

Shell-Ute Tribal 1-33Z2
(D) Parker #118
16,200' Wasatch Test
KB 6057', GL 6029'
7" csg @ 12,358'
5" csg @ 16,196'

2/22: 16,200/76/137/0. Milling. 12-3/4 hrs milling over fish. 8-1/2 hrs trip'g. Top of fish @ 11,333. Reran Mill #3 from 11,444-11,457. Cut 13'. Ran in w/Mill #5 to cut away from csg. Milled on DC's to 11,458. Made 1' of new footage w/this mill. Mill was made w/no cutting structure on the outside, but w/a brass wear pad.
Mud: (.749) 14.4+ x 45 x 2.3 (4.9#/bbl LCM) (1% oil)
2/23: 16,200/76/138/0. Going in w/Mill #6. 17-1/2 hrs trip'g. 2 hrs changing out tools. 3 hrs trying to back off DC's, no luck. CO around DC's down to 11,458' - 5 DC's. 5' below top of 6th DC w/4 DC's to go. Ran in w/back off tool. Made a good latch, but still could not back off any DC's. Unlatched & pulled out to run Mill #6.
Mud: (.754) 14.5 x 46 x 2.5 (3.9#/bbl LCM) (1% oil)
2/24: 16,200/76/139/0. Going in w/Mill #7. 9 hrs washing over w/Mill #6. 11-3/4 hrs trip'g. Washed over to 11,463. Mill #6 cut from 11,458' to 11,463'. Cut 5'. Bronze pad was worn completely off w/no indication of cutting into csg.
Mud: (.759) 14.6+ x 54 x 2.7 (4.4#/bbl LCM) (1% oil) FEB 24 1975

Shell-Ute Tribal 1-33Z2
(D) Parker #118
16,200' Wasatch Test
KB 6057', GL 6029'
7" csg @ 12,358'
5" csg @ 16,196'

16,200/76/140/0. Going in w/down hole Kelley. 13 hrs trip'g. Could not get over fish w/Mill #8. No. 7 wash over mill would not make any hole.
Mud: (.749) 14.4 x 44 x 3.5 (3.4#/bbl LCM) (1% oil) FEB 25 1975

Shell-Ute Tribal 1-33Z2
(D) Parker #118
16,200' Wasatch Test
KB 6057', GL 6029'
7" csg @ 12,358'
5" csg @ 16,196'

16,200/76/141/0. Trying to pull lower Kelley. 3 hrs trip'g in w/tools, rigging Dia-Log & Halliburton. On 2nd run for lower Kelley tools, stuck @ 6395. Released WL & jarred tools to btm. Followed on down w/WL & retrieved. Pulled to 9795 & stuck. Released & jarred tools to btm. Pulled WL. PU oil jars, ran back & retrieved tools. Swab cup was torn. Dropped lower Kelley 8'. DC's were plugged inside to the top. CO to 11,350'.
Mud: (.754) 14.5+ x 48 x 2.7 (4.4#/bbl LCM) (1% oil) FEB 26 1975

Shell-Ute Tribal 1-33Z2
(D) Parker #118
16,200' Wasatch Test
KB 6057', GL 6029'
7" csg @ 12,358'
5" csg @ 16,196'

16,200/76/142/0. Tripping in w/down hole Kelley tools. 10 hrs trip'g DP. 8-3/4 hrs running WL to retrieve down hole Kelley. 3 hrs drlg & circ w/down hole Kelley inside DC's.
Mud: (.749) 14.4 x 43 x 3.3 (4.6#/bbl LCM) (1% oil)

FEB 27 1975

Shell-Ute Tribal 1-33Z2
(D) Parker #118
16,200' Wasatch Test
KB 6057', GL 6029'
7" csg @ 12,358'
5" csg @ 16,196'

16,200/76/143/0. Trying to drill w/down hole Kelley. 24 hrs drlg w/down hole Kelley & trip'g w/WL to retrieve tools.
Mud: (.749) 14.4+ x 44 x 3.3 (3.8#/bbl LCM) (1% oil)

FEB 28 1975

Shell-Ute Tribal 1-33Z2
(D) Parker #118
16,200' Wasatch Test
KB 6057', GL 6029'
7" csg @ 12,358'
5" csg @ 16,196'

3/1: 16,200/76/144/0. Trip in w/back off tool. Tripped out w/down hole Kelley. Made up back off tool. Tool would not hold, unable to back off. Pulled & redressed tool.
Mud: (.749) 14.4 x 42 x 3.1 (3.5#/bbl LCM) (1% oil)
3/2: 16,200/76/145/0. RIH w/Mill #10. Attempted back off without success. Trip'd for wash over shoe & Mill #9. Attempted to wash over. Milled 1'. Rotated without torque, but would not go. Mill in good shape. Pulled shoe & picked up tungston shoe.
Mud: (.718) 13.8 x 46 x 4.4 (3.8#/bbl LCM) (1% oil)
3/3: 16,200/76/146/0. GIH w/back off tool. Washed over 11,464-11,470 w/shoe #10. Cut mud wt back to 12.0. 6-3/4 hrs washing over. 14-1/2 hrs trip'g.
Mud: (.624) 12.0 x 41 x 4.8 (2.1#/bbl LCM)

MAR - 3 1975

Shell-Ute Tribal 1-33Z2
(D) Parker #118
16,200' Wasatch Test
KB 6057', GL 6029'
7" csg @ 12,358'
5" csg @ 16,196'

16,200/76/147/0. G.I.H. w/Mill #12. Backed off & recovered 4 DC's full of hard cmt. Top fish @ 11,453'. R.I.H w/Mill #11, went over fish ok. Milled 2 hrs - mill torn up - pieces left in hole. Fish = 4 DC's, bit sub, csg scraper & mill.
Mud: (.593) 11.4 x 44 x 5.5 (2.2#/bbl LCM)

MAR - 4 1975

Shell-Ute Tribal 1-33Z2
(D) Parker #118
16,200' Wasatch Test
KB 6057', GL 6029'
7" csg @ 12,358'
5" csg @ 16,196'

16,200/76/148/0. Pulling Mill #13. 4 hrs milling from 11,465-11,470 w/high torque on btm. 14-1/4 hrs trip'g.
Mud: (.556) 10.7 x 45 x 5.3 (1.4#/bbl LCM)

MAR - 5 1975

Shell-Ute Tribal 1-33Z2
(D) Parker #118
16,200' Wasatch Test
KB 6057', GL 6029'
7" csg @ 12,358'
5" csg @ 16,196'

16,200/76/149/0. G.I.H. w/washover Mill #15. 13-1/2 hrs trip'g. 4 hrs repairing blocks. Ran Mill #14 w/junk sub above wash pipe, recovered cup of junk iron.
Mud: (.561) 10.8+ x 47 x 4.3 (1.6#/bbl LCM)

MAR - 6 1975

Shell-Ute Tribal 1-33Z2
(D) Parker #118
16,200' Wasatch Test
KB 6057', GL 6029'
7" csg @ 12,358'
5" csg @ 16,196'

16,200/76/150/0. Reaming w/Mill #16. 9-1/4 hrs trip'g. Mill #15 drld on junk & had high torque 5' above btm of last mill run. Drld through junk; drld to 11,473.
Mud: (.556) 10.7 x 48 x 3.5 (1.4#/bbl LCM)

MAR - 7 1975

Shell-Ute Tribal 1-33Z2
(D) Parker #118
16,200' Wasatch Test
KB 6057', GL 6029'
7" csg @ 12,358'
5" csg @ 16,196'

3/8: 16,200/76/151/0. Pulling Mill #18. 8-1/4 hrs drlg. 5-1/2 hrs reaming bad spot.
Mud: (.567) 10.9 x 59 x 3.5 (1.5#/bbl LCM)
3/9: 16,200/76/152/0. Reaming over fish. 8-1/2 hrs trip'g. 13 hrs reaming over fish & made 3'. Drld down over bad spot @ 11,467 to 11,975' in 2-1/2 hrs w/Mill #18. Torqued up & stuck for 10-1/2 hrs w/cont'd high torque. Drld to 11,487, got stuck, pulled free & reamed back to 11,486.
Mud: (.556) 10.7 x 50 x 3.1 (1.3#/bbl LCM)
3/10: 16,200/76/153/0. Going in w/Mill #20. 7 hrs washing & reaming over fish. 16-1/2 hrs trip'g.
Mud: (.567) 10.9 x 57 x 3.5 (1.4#/bbl LCM)

MAR 10 1975

Shell-Ute Tribal 1-33Z2
(D) Parker #118
16,200' Wasatch Test
KB 6057', GL 6029'
7" csg @ 12,358'
5" csg @ 16.196'

16,200/76/154/0. Repairing rotary clutch. 9-1/2 hrs trip'g. 8-1/2 hrs reaming & milling on junk.
Mud: (.566) 10.9 x 54 x 3.1 (1.3#/bbl LCM)

MAR 11 1975

Shell-Ute Tribal 1-33Z2
(D) Parker #118
16,200' Wasatch Test
KB 6057', GL 6029'
7" csg @ 12,358'
5" csg @ 16,196'

16,200/76/155/0. Pulling Mill #21. 8 hrs washing & reaming over fish & drlg iron. 13 hrs working on rotary clutch.
Mud: (.572) 11.0 x 52 x 2.8 (1.2#/bbl LCM)

MAR 12 1975

Shell-Ute Tribal 1-33Z2
(D) Parker #118
16,200' Wasatch Test
KB 6057', GL 6029'
7" csg @ 12,358'
5" csg @ 16,196'

16,200/76/156/0. G.I.H. w/back off tool. 18-1/2 hrs trip'g.
Mud: (.572) 11.0 x 64 x 2.7 (1.9#/bbl LCM)

MAR 13 1975

Shell-Ute Tribal 1-33Z2
(D) Parker #118
16,200' Wasatch Test
KB 6057', GL 6029'
7" csg @ 12,358'
5" csg @ 16,196'

16,200/76/157/0. Prep to run mill. 11-3/4 hrs trip'g. 2-1/2 hrs reaming over fish w/Mill #23. Ran back off tool & recovered DC. Top of fish now @ 11,483.
Mud: (.577) 11.1 x 52 x 2.7 (1.7#/bbl LCM)

MAR 14 1975

Shell-Ute Tribal 1-33Z2
(D) Parker #118
16,200' Wasatch Test
KB 6057', GL 6029'
7" csg @ 12,358'
5" csg @ 16,196'

3/15: 16,200/76/158/0. Sptg pill in prep to pull tapered mill.
Mud: (.572) 11.0 x 50 x 2.5 (1.4#/bbl LCM)
3/16: 16,200/76/159/0. Milling w/junk Mill #1.
Mud: (.577) 11.1 x 59 x 2.0 (3.0#/bbl LCM)
3/17: 16,200/76/160/0. Work on motors. 16-1/2 hrs trip'g.

MAR 1[illegible] 1975

Shell-Ute Tribal 1-33Z2
(D) Parker #118
16,200' Wasatch Test
KB 6057', GL 6029'
7" csg @ 12,358'
5" csg @ 16,196'

16,200/76/161/0. Milling.
Mud: (.577) 11.1+ x 75 x 1.6 (2.5#/bbl LCM)

MAR 18 1975

Shell-Ute Tribal 1-33Z2
(D) Parker #118
16,200' Wasatch Test
KB 6057', GL 6029'
7" csg @ 12,358'
5" csg @ 16,196'

16,200/76/162/0. Milling. Milled 11,478-11,480 in 14 hrs.
Mud: (.577) 11.1+ x 71 x 20 (3#/bbl LCM)

MAR 19 1975

Shell-Ute Tribal 1-33Z2
(D) Parker #118
16,200' Wasatch Test
KB 6057', GL 6029'
7" csg @ 12,358'
5" csg @ 16,196'

No report.

MAR 20 1975

Shell-Ute Tribal 1-33Z2
(D) Parker #118
16,200' Wasatch Test
KB 6057', GL 6029'
7" csg @ 12,358'
5" csg @ 16,196'

16,200/76/164/0. Pulling Mill #8. Milled from 11,481 to 11,482 in 12 hrs. Junk sub half full of very small pieces of junk. Mill showed grooving on face as if milling on pieces of junk.
Mud: (.530) 11.2+ x 67 x 2.2 (2.8#/bbl LCM)

MAR 21 1975

Shell-Ute Tribal 1-33Z2
(D) Parker #118
16,200' Wasatch Test
KB 6057', GL 6029'
7" csg @ 12,358'
5" csg @ 16,196'

3/22: 16,200/76/165/0. Trip'g out w/wash over Mill #24. 13-3/4 hrs trip'g. 4-1/2 hrs washing over DC's.
Mud: (.587) 11.3 x 56 x 2.7 (2.1#/bbl LCM)
3/23: 16,200/76/166/0. Trip'g out w/wash over Mill #25. 12-3/4 hrs trip'g. Trip'd in w/overshot to see if DC's would rotate - they would not. Wash over Mill #25 stuck.
Mud: (.587) 11.3 x 81 x 2.2 (1.6#/bbl LCM)
3/24: 16,200/76/167/0. Milling w/Mill #10. 14 hrs trip'g. Mill #9 junk sub was full of steel cuttings.
Mud: (.587) 11.3 x 76 x 2.0 (1.4#/bbl LCM)

MAR 2 4 1975

Shell-Ute Tribal 1-33Z2
(D) Parker #118
16,200' Wasatch Test
KB 6057', GL 6029'
7" csg @ 12,358'
5" csg @ 16,196'

16,200/76/168/0. Washing over w/Mill #27. 17-1/4 hrs trip'g. 6-1/4 hrs milling.
Mud: (.587) 11.3+ x 74 x 2.0 (1.1#/bbl LCM)

MAR 2 5 1975

Shell-Ute Tribal 1-33Z2
(D) Parker #118
16,200' Wasatch Test
KB 6057', GL 6029'
7" csg @ 12,358'
5" csg @ 16,196'

16,200/76/169/0. Washing over DC's w/Mill #28. 14-1/2 hrs washing over DC's. 8-1/2 hrs trip'g.
Mud: (.587) 11.3 x 67 x 2.3 (1.4#/bbl LCM)

MAR 2 6 1975

Shell-Ute Tribal 1-33Z2
(D) Parker #118
16,200' Wasatch Test
KB 6057', GL 6029'
7" csg @ 12,358'
5" csg @ 16,196'

16,200/76/170/0. Milling. 17-1/2 hrs trip'g. After pulling washover mill #29, no junk found in junk sub.
Mud: (.587) 11.3 x 70

MAR 2 7 1975

Shell-Ute Tribal 1-33Z2
(D) Parker #118
16,200' Wasatch Test
KB 6057', GL 6029'
7" csg @ 12,358'
5" csg @ 16,196'

3/28: 16,200/76/171/0. Trip'g out w/Mill #31. 3-1/4 hrs washing to btm. 8-1/4 hrs milling w/washover shoe. 10-3/4 hrs trip'g.
Mud: (.592) 11.4 x 74 x 2.0 (1.7#/bbl LCM)
3/29: 16,200/76/172/0. Circulating, cleaning hole. 16-1/2 hrs milling. 6-1/2 hrs trip'g.
Mud: (.587) 11.3 x 70 x 1.8 (1.9#/bbl LCM)
3/30: 16,200/76/173/0. Trip'g out w/Mill #33. 5-1/2 hrs circ out cmt & cuttings. 12-3/4 hrs trip'g.
Mud: (.592) 11.4 x 69 x 2.0 (1.6#/bbl LCM)
3/31: 16,200/76/174/0. Trip'g in w/bumper sub & jars. Ran overshot & backoff tool & worked over fish. Pulled loose. After jarring to 40,000#, trip'd out & ran back in w/die collar. Screwed onto fish & backed off w/Wilson backoff tool. Pulled 2-1/2 DC's.
Mud: (.587) 11.3 x 65 x 2.3 (1.8#/bbl LCM)

MAR 3 1 1975

Shell-Ute Tribal 1-33Z2
(D) Parker #118
16,200' Wasatch Test
KB 6057', GL 6029'
7" csg @ 12,358'
5" csg @ 16,196'

16,200/76/175/0. Tripping in hole. Screwed into fish. Pulled up 25,000# over wt of fishing string. Press up to 3500#. Had bit sub screwed back onto fish & jarred five times @ 225,000 wt, 50,000# over fishing string wt. Pulled loose. Recovered 3' long bit sub. Left csg scraper & mill in hole. Ran in w/bit sub w/1/2" hole bored in side. Could not get fish. Pulled string.
Mud: (.582) 11.2 x 58 x 1.8 (1.4#/bbl LCM)

APR 01 1975

Shell-Ute Tribal 1-33Z2
(D) Parker #118
16,200' Wasatch Test
KB 6057', GL 6029'
7" csg @ 12,358'
5" csg @ 16,196'

16,200/76/176/0. Trip'g to change shoe. Tripped in w/wash-over shoe. Milled over csg scraper & Ist set of scraper blades. Stopped on 2nd set of blades. Tripped out & ran in w/4-1/4" ID milling shoe to size fishing neck of csg scraper.
Mud: (.587) 11.3 x 70 x 1.6 (1.5#/bbl LCM)

APR 03 1975

Shell-Ute Tribal 1-33Z2
(D) Parker #118
16,200' Wasatch Test
KB 6057', GL 6029'
7" csg @ 12,358'
5" csg @ 16,196'

16,200/76/177/0. Prep to CO all cmt. Tripped in w/5-5/16 ID milling shoe. Milled over scraper. Tripped out & ran in w/short catch overshot. Jarred on fish for 45 mins. Pulled & recovered all of fish.
Mud: (.592) 11.4 x 67 x 1.6 (1.7#/bbl LCM)

APR 03 1975

Shell-Ute Tribal 1-33Z2
(D) Parker #118
16,200' Wasatch Test
KB 6057', GL 6029'
7" csg @ 12,358'
5" csg @ 16,196'

16,200/76/178/0. CO cmt. Cleaned out from 11,576-11,870.
Mud: (.587) 11.3 x 54 x 1.4 (1.6#/bbl LCM)

APR 04 1975

Shell-Ute Tribal 1-33Z2
(D) Parker #118
16,200' Wasatch Test
KB 6057', GL 6029'
7" csg @ 12,358'
5" csg @ 16,196'

4/5: 16,200/76/179/0. Tripping out. 16-3/4 hrs milling cmt. 3 hrs circ cmt up.
Mud: (.582) 11.2 x 56 x 1.6 (1.7#/bbl LCM)
4/6: 16,200/76/180/0. PU Bkr RTTS. 4 hrs trip'g in w/csg scraper. 2-1/2 hrs reaming w/csg scraper. 6 hrs run'g Csg Caliper. Csg cut through @ 11,507 & @ 11,515. Csg bad from 11,435 to 11,527 using Dia-Log depths.
Mud: (.566) 10.9 x 47 x 1 (1.6#/bbl LCM)
4/7: 16,200/76/181/0. Prep to run liner. 13-1/4 hrs trip'g. 5 hrs circ. Tested liner lap w/pkr set @ 12,070' to 3200 psi for 30 mins, ok. Tested csg w/3800 psi for 15 mins, ok, w/pkr set @ 8205. Tested csg w/4200 psi for 15 mins w/pkr set @ 4403, ok. Tested csg w/4500 psi for 15 mins w/pkr set @ 1997, ok.
Mud: (.592) 11.4 x 45 x 1.6 (2.6#/bbl LCM)

APR 07 1975

Shell-Ute Tribal 1-33Z2
(D) Parker #118
16,200' Wasatch Test
KB 6057', GL 6029'
7" csg @ 12,358'
5" csg @ 16,196'

16,200/76/182/0. WOC. Ran 97 jts 5" 18# N-80 Hydril csg (4006') btm set @ 12,109 & top @ 8103 and cmt'd w/321 sx Class "G" cmt w/1% D-31 & .3% HR-5. Sheared first plug @ 9 p.m. Stopped pmp'g @ 9:35 p.m. Did not bump plug. Over displaced 1.3 bbls. Btm pkr held, but liner hanger wouldn't.
Mud: (.592) 11.4 x 49 x 1.8 (1.9#/bbl LCM)

APR 08 1975

Shell-Ute Tribal 1-33Z2
(D) Parker #118
16,200' Wasatch Test
KB 6057', GL 6029'
7" csg @ 12,358'
5" csg @ 16,196'

16,200/76/183/0. Laying down DP. 9-1/2 hrs WOC. 7-1/4 hrs circ & washing & reaming to top of liner. No cmt on top of liner.
Mud: (.582) 11.2 x 50 x 1.8

APR 09 1975

Shell-Ute Tribal 1-33Z2
(D) Parker #118
16,200' Wasatch Test
KB 6057', GL 6029'
7" csg @ 12,358'
5" csg @ 16,196'

16,200/76/184/0. Drilling cmt.
Mud: (.587) 11.3 x 50 x 2.3 (1.3#/bbl LCM)

APR 10 1975

Shell-Ute Tribal 1-33Z2
(D) Parker #118
16,200' Wasatch Test
KB 6057', GL 6029'
7" csg @ 12,358'
5" csg @ 16,196'

16,200/76/185/0. CO cmt in 5" liner.
Mud: (.577) 11.1 x 56 x 3.1 (1.5#/bbl LCM)

APR 11 1975

Shell-Ute Tribal 1-33Z2
(D) Parker #118
16,200' Wasatch Test
KB 6057', GL 6029'
7" csg @ 12,358'
5" csg @ 16,196'

4/12: 16,200/76/186/0. CO cmt. 24 hrs drlg cmt.
Mud: (.587) 11.3 x 56 x 3.3 (1.4#/bbl LCM)
4/13: 16,200/76/187/0. Milling on wiper plugs. 24 hrs CO cmt to 16,062.
Mud: (.582) 11.2 x 52 x 3.5 (1.5#/bbl LCM) (1% oil)
4/14: 16,200/76/188/0. G.I.H. w/RTTS tool. 10-3/4 hrs trip.
Mud: (.587) 11.3 x 51 x 3.5 (1.5#/bbl LCM) (1% oil)

APR 14 1975

Shell-Ute Tribal 1-33Z2
(D) Parker #118
16,200' Wasatch Test
KB 6057', GL 6029'
7" csg @ 12,358'
5" csg @ 16,196'

16,200/76/189/0. Laying down DP. Ran inflow test. Pkr @ 8070'. Displaced w/wtr to 7850. Displaced mud w/wtr. Ran 250 gals BJ mud flush followed by 500 BW followed by 150 gals mud flush followed by 450 BW. Press tested to 4500 psi. Sptd 800 gals 10% inhibited acetic acid on btm.
Mud: Water

APR 15 1975

Shell-Ute Tribal 1-33Z2
(D) Parker #118
16,200' Wasatch Test
KB 6057', GL 6029'
7" csg @ 12,358'
5" csg @ 16,196'

16,200/76/190/0. ND BOP's. 13-1/2 hrs LD DP. Ran 4499.75' 106 jts of used 5-1/2" 14# K-55 heat string.
Mud: Water

APR 16 1975

Shell-Ute Tribal 1-33Z2 (D) Parker #118 16,200' Wasatch Test KB 6057', GL 6029' 7" csg @ 12,358' 5" csg @ 16,196'	TD 16,200. PB 16,075. Run'g Bkr pkr. 11 hrs changing out BOP's. 11-1/2 hrs run'g CBL/VDL & PDC/CCL logs. Ran CBL/VDL w/4500 psi on csg. Mud: Water APR 17 1975
Shell-Ute Tribal 1-33Z2 (D) Parker #118 16,200' Wasatch Test KB 6057', GL 6029' 7" csg @ 12,358' 5" csg @ 16,196'	TD 16,200. PB 16,075. RU to displace wtr. Set Bkr Model "FA" (32FA30 pkr w/MDE 2 jt 2-7/8" tbg, Otis nipple & Bkr Model "C" expendable plug holder) @ 13,730' w/tail @ 13,772'. 20-3/4 hrs RU & run'g 443 jts 2-7/8 N-80, 6.32#, 8rd tbg w/Bkr anchor seal assembly. Mud: Water APR 18 1975
Shell-Ute Tribal 1-33Z2 (D) 16,200' Wasatch Test KB 6057', GL 6029' 7" csg @ 12,358' 5" csg @ 16,196'	TD 16,200. PB 16,075. MORT. Displaced wtr w/inhibited wtr as per Oil Letter #1. Pmpd 2% NaCl down tbg. Landed tbg & installed back press valve. Tested tbg to 7500 psi for 1 hr, 300 psi loss. Installed 10,000 psi frac tree & tested to 10,500 psi, ok. Pmpd 2 bbls diesel down each annulus (9-5/8 x 7", 7" x 5-1/2", 5-1/2" x 2-7/8"). Released rig 5 p.m. 4/18/75. (RDUFA) APR 21 1975
Shell-Ute Tribal 1-33Z2 (D) 16,200' Wasatch Test KB 6057', GL 6029' 7" csg @ 12,358' 5" csg @ 16,196'	TD 16,200. PB 16,075 (RRD 4/21/75) Prep to knock out tbg plug. MIRU Hot Oil Service & press tbg to 4000 psi. MAY 7 1975
Shell-Ute Tribal 1-33Z2 (D) 16,200' Wasatch Test KB 6057', GL 6029' 7" csg @ 12,358' 5" csg @ 16,196'	TD 16,200. PB 16,095. Prep to stimulate. MI&RU Sun Oilfield Service. Knocked out tbg plug & chased to TD. POOH. MI&RU OWP. Ran Temp log from tbg tail @ 13,700 to PBTD @ 16,095. Ran in to perf 1 hole @ each of the following depths using 2" steel carrier gun decentralized top, middle & btm w/magnets. Used Harrison RT charges. Run #1 press before perf'g 80 psi. Perf'd 1 hole @ each of following: 16,054, 16,051, 16,043, 16,037, 16,031, 16,027, 16,020, 16,016, 16,000, 15,992, 15,986, 15,976, 15,973, 15,958, 15,953, 15,945, 15,939, 15,934, 15,927, 15,922, 15,916, 15,912, 15,908, 15,892, 15,888, 15,879, 15,871, 15,867, 15,863, 15,850, 15,847, 15,843, 15,839, 15,831, 15,823, 15,806, 15,801, 15,788, 15,781, 15,770. Total of 40 holes. Press after perf'g 40 psi. Run #2 press before perf'g 120 psi. Perf'd 1 hole @ each of following: 15,763, 15,754, 15,749, 15,744, 15,740, 15,726, 15,719, 15,707, 15,701, 15,682, 15,670, 15,664, 15,656, 15,637, 15,634, 15,629, 15,623, 15,619, 15,609, 15,605, 15,588, 15,582, 15,572, 15,566, 15,558, 15,554, 15,545, 15,536, 15,520, 15,516, 15,506, 15,501. Total 32 holes. Press after perf'g 160 psi. Depths refer to CNL/FDC/GR dated 12/27/74. POOH. RD&MO OWP. MAY 8 1975

Shell-Ute Tribal 1-33Z2
(D)
16,200' Wasatch Test
KB 6057', GL 6029'
7" csg @ 12,358'
5" csg @ 16,196'

TD 16,200. PB 16,095. Prep to flow for cleanup. 14-hr SITP 4500. MI&RU BJ Service & AT gross perf'd interval 15,501-16,054 (72 holes) w/300 bbls 15% HCl acid as follows: Pmp'd 4 bbls acid & dropped 2 7/8" RCN ball sealers w/1.4 spec grav. Repeated 71 times. Pmp'd 12 bbls acid w/o Unibeads. Flushed w/122 bbls fresh wtr containing 3 gals G10 & 1140# NaCl/1000 gals fresh wtr. All acid except last 12 bbls contained 3 gals G10, 3 gals C15, 3 gals J22, 40# OS-160 Wide Range Unibeads, 40# OS-160 Button Unibeads & 3# 20-40 mesh RA sd/1000 gals acid. Max press 10,000 psi, avg 9200, min 7400. Max rate 7.5 B/M, avg 7, min 1.5. Reached 10,000 psi inj press 7 times before releasing ball sealers. FPP 8900, ISIP 8000 psi; 5, 10 & 15-min SIP 8000. SI overnight.

MAY 9 1975

Shell-Ute Tribal 1-33Z2
(D)
16,200' Wasatch Test
KB 6057', GL 6029'
7" csg @ 12,358'
5" csg @ 16,196'

TD 16,200. PB 16,095. Prep to run GR. 5/9 19-hr SITP 8000 psi. Opened well to pit & immediately plugged pit line chk w/Unibeads. Unibeads completely dehydrated & it took 2-3 hrs to CO treater lines w/hot oiler. Est 3-4 bbls Unibeads. Opened well to pit & flwd est 100 bbls load wtr w/some acid wtr & considerably more Unibeads in 4 hrs. FTP down to 50 psi. SI overnight. 5/10 12-hr SITP 5700. Opened well to pit & well flwd est 50 bbls load wtr in 2 hrs followed by an est 50 bbls acid wtr in 2 hrs followed by an est 50 bbls oil & gas in 2 hrs. FTP gradually to 0 & well died. SI well for 1-1/2 hrs. Circ'd heat string w/hot oiler. Opened well to pit & flwd est 15 bbls oil & 20 BW in 1 hr & FTP to 0. SI overnight. 5/11 14-hr SITP 5200.

MAY 12 1975

Shell-Ute Tribal 1-33Z2
(D)
16,200' Wasatch Test
KB 6057', GL 6029'
7" csg @ 12,358'
5" csg @ 16,196'

TD 16,200. PB 16,095. Prep to kick off well w/nitrogen. SITP 38 hrs 5600#. Opened well to pit & flwd 15 BO w/small amt wtr in 1 hr. FTP to 0. MI&RU OWP & ran GR tracer survey from PBTD 16,095 to pkr @ 13,600. POOH. 4-1/2-hr SITP while log'g 1500. Opened well to pit & flwd est 3 BO, 1 BW in 30 mins. Well died. SI overnight.

MAY 13 1975

Shell-Ute Tribal 1-33Z2
(D)
16,200' Wasatch Test
KB 6057', GL 6029'
7" csg @ 12,358'
5" csg @ 16,196'

TD 16,200. PB 16,095. Prep to kick off well w/nitrogen. SITP 4200. MI&RU Nowsco 1" coil tbg unit & nitrogen trk. Ran in hole w/tbg to 12,100' & blew hole dry. Last 1 hr nitrogen return had only trace wtr. Used total 143,000 standard cu ft nitrogen. POOH & SI overnight.

MAY 14 1975

Shell-Ute Tribal 1-33Z2
(D)
16,200' Wasatch Test
KB 6057', GL 6029'
7" csg @ 12,358'
5" csg @ 16,196'

TD 16,200. PB 16,095. SI. 15-hr SITP 800 psi. Opened well to pit. Flwd 3 BO & considerable gas in 30 mins. FTP 0. Next 1-1/2 hrs prod only small amt of gas. SI well. 2-hr SITP 0. Opened well; well dead. SI.

MAY 15 1975

Shell-Ute Tribal 1-33Z2
(D)
16,200' Wasatch Test
KB 6057', GL 6029'
7" csg @ 12,358'
5" csg @ 16,196'

TD 16,200. PB 16,095. 19-hr SITP 3900. Opened well @ 3 p.m. Flwd approx 12 BO w/some gas & no wtr in 1-1/2 hrs & died. SI @ 4:30 p.m.

MAY 16 1975

Shell-Ute Tribal 1-33Z2
(D)
16,200' Wasatch Test
KB 6057', GL 6029'
7" csg @ 12,358'
5" csg @ 16,196'

TD 16,200. PB 16,095. 5/16-5/18 SI, no operations.

MAY 19 1975

Shell-Ute Tribal 1-33Z2
(D)
16,200' Wasatch Test
KB 6057', GL 6029'
7" csg @ 12,358'
5" csg @ 16,196'

TD 16,200. PB 16,095. SI.

MAY 20 1975

Shell-Ute Tribal 1-33Z2
(D)
16,200' Wasatch Test
KB 6057', GL 6029'
7" csg @ 12,358'
5" csg @ 16,196'

TD 16,200. PB 16,095. SI.

MAY 21 1975

Shell-Ute Tribal 1-33Z2
(D)
16,200' Wasatch Test
KB 6057', GL 6029'
7" csg @ 12,358'
5" csg @ 16,196'

TD 16,200. PB 16,095. SI.

MAY 22 1975

Shell-Ute Tribal 1-33Z2
(D)
16,200' Wasatch Test
KB 6057', GL 6029'
7" csg @ 12,358'
5" csg @ 16,196'

TD 16,200. PB 16,095. SI. SITP 6000 psi. Opened well. Bled to 100# in 2 mins. Bled to 0 on 1" chk in 30 mins. Recovered est 3 BO, no wtr & some gas.

MAY 23 1975

Shell-Ute Tribal 1-33Z2 (D)
16,200' Wasatch Test
KB 6057', GL 6029'
7" csg @ 12,358'
5" csg @ 16,196'

TD 16,200. PB 16,095. Prep to perf.

MAY 27 1975

Shell-Ute Tribal 1-33Z2 (D)
16,200' Wasatch Test
KB 6057', GL 6029'
7" csg @ 12,358'
5" csg @ 16,196'

TD 16,200. PB 16,095. RU OWP & perf'd as per CNL/FDC/GR dated 2/10/75. Perf'd one hole @ each of following depths: 15,497, 15,492, 15,486, 15,479, 15,476, 15,473, 15,469, 15,463, 15,458, 15,452, 15,448, 15,436, 15,425, 15,419, 15,415, 15,410, 15,403, 15,397, 15,389, 15,382, 15,373, 15,366, 15,357, 15,349, 15,339, 15,337, 15,332, 15,325, 15,318, 15,309, 15,302, 15,294, 15,290, 15,280, 15,276, 15,274, 15,267, 15,262, 15,257, 15,252, 15,241, 15,235, 15,221, 15,214, 15,207, 15,201, 15,188, 15,179, 15,176, 15,171, 15,155, 15,143, 15,130, 15,124, 15,119, 15,100, 15,096, 15,081, 15,071, 15,067, 15,060, 15,042, 15,037, 15,031, 15,027, 15,022, 15,017, 15,009, 14,989, 14,981, 14,975, 14,944, 14,933, 14,926, 14,921, 14,918, 14,905, 14,899, 14,889, 14,884, 14,874, 14,868, 14,857, 14,839, 14,835, 14,827, 14,792, 14,787, 14,778, 14,773, 14,767, 14,751, 14,743, 14,730, 14,722, 14,715, 14,702, 14,696, 14,692, 14,686, 14,677, 14,664, 14,661, 14,658, 14,655, 14,642, 14,639, 14,635, 14,630, 14,607, 14,595, 14,589, 14,579, 14,564, 14,561, 14,558, 14,555, 14,544, 14,533, 14,528, 14,523, 14,512, 14,507. Total of 123 holes. Press built up from 390-870# during job w/no significant jumps. SI well press 1900#.

MAY 28 1975

Shell-Ute Tribal 1-33Z2 (D)
16,200' Wasatch Test
KB 6057', GL 6029'
7" csg @ 12,358'
5" csg @ 16,196'

TD 16,200. PB 16,095. Prep to AT.

MAY 29 1975

Shell-Ute Tribal 1-33Z2
(D)
16,200' Wasatch Test
KB 6057', GL 6029'
7" csg @ 12,358'
5" csg @ 16,196'

TD 16,200. PB 16,095. Prep [illegible] flow to pit. 5/29 SITP 5300. MI&RU BJ Service & AT gross perf'd interval 14,507-16,054 w/590 bbls 15% HCl acid & flushed w/122 bbls fresh wtr containing 3 gals G10 & 1590# NaCl/1000 gals wtr. All acid except last 5 bbls had no Unibeads contained 3 gals G10, 3 gals C15, 3 gals J22, 40# OS-160 Wide Range Unibeads & 3# 20-40 mesh RA sd/1000 gals acid. Pmp'd 3 bbls acid & dropped 1 7/8" RCN ball sealer. Pmp'd 3 bbls acid & dropped 2 7/8" ball sealers. Repeatedly alternated 1 ball w/3 bbls & then 2 balls w/3 bbls acid for total of 585 bbls acid & 292 ball sealers. Max press 9100 psi, min 7500, avg 8500. Max rate 8 B/M, min 3.5, avg 8. ISIP 7200 psi, 5 mins 5600, 10 mins 3850, 15 mins 3500, 20 mins 3300, 25 mins 3200, 30 mins 3200, 35 mins 3100. RD&MO BJ Service. MI&RU OWP & ran GR tracer log from PBTD to pkr. SI overnight

MAY 30 1975

Shell-Ute Tribal 1-33Z2
(D)
16,200' Wasatch Test
KB 6057', GL 6029'
7" csg @ 12,358'
5" csg @ 16,196'

TD 16,200. PB 16,095. (Correction to report of 5/30/75; Stimulation trtmt should have read: ....All acid contained 3 gals G10, 3 gals C15, 3 gals J22, 40# OS-160 Wide Range Unibeads & 3# 20-40 mesh RA sd/1000 gals acid (last 5 bbls had no Unibeads)....) 13-hr SITP 2100#. Opened well to pit & FTP down to 100 psi & well flowing flush & acid wtr on 1" chk in 1/2 hr. 1/2 hr later FTP 700 on 1" chk. Flowing almost all oil & gas. Flowing to pit. Cleaning up for 1 hr more & FTP 3000 psi on 37/64" chk. Interpretation of GR log indicated 83% of perfs showed RA. SI well to hook up to tank battery. Rec'd 10 ball sealers from chk. In 12 hrs well flwd 834 BO, 15 BW & 973 MCF/D gas rate. Avg rate last 5 hrs 74.5 BO & 1 BW/H w/906 MCF/D gas on 16/64" chk w/FTP 2200 psi. Turned well over to prod @ 6 a.m. 5/31/75.

JUN 02 1975

Shell-Ute Tribal 1-33Z2
(D)
16,200' Wasatch Test
KB 6057', GL 6029'
7" csg @ 12,358'
5" csg @ 16,196'

TD 16,200. PB 16,095. Flowing. On 24-hr test, flwd 1795 BO, 4 BW, 909 MCF gas through 16/64" chk w/2000 psi FTP.

JUN 03 1975

Shell-Ute Tribal 1-33Z2
(D)
16,200' Wasatch Test
KB 6057', GL 6029'
7" csg @ 12,358'
5" csg @ 16,196'

TD 16,200. PB 16,095. Flowing. On 24-hr test, flwd 1548 BO, 2 BW, 824 MCF gas thru 16/64" chk w/2000 psi FTP.

JUN 04 1975

Shell-Ute Tribal 1-33Z2
(D)
16,200' Wasatch Test
KB 6057', GL 6029'
7" csg @ 12,358'
5" csg @ 16,196'

TD 16,200. PB 16,095. Flowing. On 24-hr test, flwd 1592 BO, 3 BW, 841 MCF gas thru 16/64" chk w/2000 psi FTP.

JUN 05 1975

Shell-Ute Tribal 1-33Z2
(D)
16,200' Wasatch Test
KB 6057', GL 6029'
7" csg @ 12,358'
5" csg @ 16,196'

TD 16,200. PB 16,095. Flowing. On 8-hr test, flwd 409 BO, 4 BW, 269 MCF gas thru 16/64" chk w/2000 psi FTP.

JUN 06 1975

Shell-Ute Tribal 1-33Z2
(D)
16,200' Wasatch Test
KB 6057', GL 6029'
7" csg @ 12,358'
5" csg @ 16,196'

TD 16,200. PB 16,095. Flowing. On various tests, flwd:

Rept Date	Hrs	BO	BW	MCF Gas	Chk	FTP
6/7 & 6/8:	SI for BHP					
6/9:	20	941	4	771	11/64"	2200

JUN 09 1975

Shell-Ute Tribal 1-33Z2
(D)
16,200' Wasatch Test
KB 6057', GL 6029'
7" csg @ 12,358'
5" csg @ 16,196'

TD 16,200. PB 16,095. Flowing. On 24-hr test, flwd 1131 BO, 0 BW, 925 MCF gas thru 15/64" chk w/2000 psi FTP.

JUN 10 1975

Shell-Ute Tribal 1-33Z2
(D)
16,200' Wasatch Test
KB 6057', GL 6029'
7" csg @ 12,358'
5" csg @ 16,196'

TD 16,200. PB 16,095. Flowing. On 22-hr test, flwd 1047 BO, 0 BW, 786 MCF gas thru 15/64" chk w/1975 psi FTP.

JUN 11 1975

Shell-Ute Tribal 1-33Z2
(D)
16,200' Wasatch Test
KB 6057', GL 6029'
7" csg @ 12,358'
5" csg @ 16,196'

TD 16,200. PB 16,095. Flowing. On 24-hr test, flwd 1220 BO, 1 BW, 582 MCF gas thru 15/64" chk w/1900 psi FTP.

JUN 12 1975

Shell-Ute Tribal 1-33Z2
(D)
16,200' Wasatch Test
KB 6057', GL 6029'
7" csg @ 12,358'
5" csg @ 16,196'

TD 16,200. PB 16,095. Flowing. On 24-hr test, flwd 1252 BO, 1 BW, 492 MCF gas thru 15/64" chk w/1900 psi FTP.

JUN 13 1975

Shell-Ute Tribal 1-33Z2
(D)
16,200' Wasatch Test
KB 6057', GL 6029'
7" csg @ 12,358'
5" csg @ 16,196'

TD 16,200. PB 16,095. Flowing. PROD LOG'G COMPLETE. AFE #516191 provided funds for prod log'g. Cut paraffin to 7000'. RU Schl & made dummy run & recorded drag every 1000'; no excessive drag encountered. Ran FBS, Gradio & Temp logs. Recorded Gradio above perfs. Left tools 250' below tbg tail. Opened well & stabilized 10 hrs. Ran Temp, FBS & Gradio. Put well back on prod.

JUN 16 1975

Shell-Ute Tribal 1-33Z2
(D)
16,200' Wasatch Test
KB 6057', GL 6029'
7" csg @ 12,358'
5" csg @ 16,196'

TD 16,200. PB 16,095. Flowing. On 24-hr test, flwd 1076 BO, 4 BW, 528 MCF gas thru 12/64" chk w/1900 psi FTP.

JUN 17 1975

Shell-Ute Tribal 1-33Z2
(D)
16,200' Wasatch Test
KB 6057', GL 6029'
7" csg @ 12,358'
5" csg @ 16,196'

TD 16,200. PB 16,095. Flowing. On 24-hr test, flwd 1109 BO, 5 BW, 543 MCF gas thru 12/64" chk w/1900 psi FTP.

JUN 18 1975

Shell-Ute Tribal 1-33Z2
(D)
16,200' Wasatch Test
KB 6057', GL 6029'
7" csg @ 12,358'
5" csg @ 16,196'

TD 16,200. PB 16,095. Flowing. On 24-hr test, flwd 1306 BO, 6 BW, 649 MCF gas thru 12/64" chk w/1900 psi FTP.

JUN 19 1975

Shell-Ute Tribal 1-33Z2
(D)
16,200' Wasatch Test
KB 6057', GL 6029'
7" csg @ 12,358'
5" csg @ 16,196'

TD 16,200. PB 16,095. Flowing. On 24-hr test, flwd 992 BO, 3 BW, 522 MCF gas thru 12/64" chk w/1550 psi FTP.

JUN 20 1975

Shell-Ute Tribal 1-33Z2
(D)
16,200' Wasatch Test
KB 6057', GL 6029'
7" csg @ 12,358'
5" csg @ 16,196'

TD 16,200. PB 16,095. Flowing. On various tests, flwd:

Rept Date	Hrs	BO	BW	MCF Gas	Chk	FTP
6/21:	24	1069	7	536	12/64"	1850
6/22:	24	1081	6	522	12/64"	1850
6/23:	24	1117	6	476	12/64"	300

JUN 23 1975

Shell-Ute Tribal 1-33Z2
(D)
16,200' Wasatch Test
KB 6057', GL 6029'
7" csg @ 12,358'
5" csg @ 16,196'

TD 16,200. PB 16,095. Flowing. On 24-hr test, flwd 1240 BO, 7 BW, 476 MCF gas thru 12/64" chk w/300 psi FTP.

JUN 24 1975

Shell-Ute Tribal 1-33Z2
(D)
16,200' Wasatch Test
KB 6057', GL 6029'
7" csg @ 12,358'
5" csg @ 16,196'

TD 16,200. PB 16,095. Flowing. On 24-hr test, flwd 1117 BO, 6 BW, 655 MCF gas thru 12/64" chk w/400 psi FTP.

JUN 25 1975

Shell-Ute Tribal 1-33Z2
(D)
16,200' Wasatch Test
KB 6057', GL 6029'
7" csg @ 12,358'
5" csg @ 16,196'

TD 16,200. PB 16,095. Flowing. On 24-hr test, flwd 713 BO, 2 BW, 434 MCF gas thru 11/64" chk w/2000 psi FTP.

JUN 26 1975

Shell-Ute Tribal 1-33Z2
(D)
16,200' Wasatch Test
KB 6057', GL 6029'
7" csg @ 12,358'
5" csg @ 16,196'

TD 16,200. PB 16,095. Flowing. On 24-hr test, flwd 1236 BO, 5 BW, 605 MCF gas thru 13/64" chk w/1700 psi FTP.

JUN 27 1975

Shell-Ute Tribal 1-33Z2
(D)
16,200' Wasatch Test
KB 6057', GL 6029'
7" csg @ 12,358'
5" csg @ 16,196'

TD 16,200. PB 16,095. Flowing. On various tests, flwd:

Rept Date	Hrs	BO	BW	MCF Gas	Chk	FTP
6/28:	24	1173	3	578	13/64"	1700
6/29:	24	1042	4	502	11/64"	1700
6/30:	24	1112	4	565	11/64"	1800

JUN 30 1975

Shell-Ute Tribal 1-33Z2
(D)
16,200' Wasatch Test
KB 6057', GL 6029'
7" csg @ 12,358'
5" csg @ 16,196'

TD 16,200. PB 16,095. Flowing. On 24-hr test, flwd 1261 BO, 5 BW, 660 MCF gas thru 13/64" chk w/1700 psi FTP.

JUL 01 1975

Shell-Ute Tribal 1-33Z2
(D)
16,200' Wasatch Test
KB 6057', GL 6029'
7" csg @ 12,358'
5" csg @ 16,196'

TD 16,200. PB 16,095. Flowing. On 19-hr test, flwd 591 BO, 2 BW, 278 MCF gas thru 8/64" chk w/2000 psi FTP.

JUL 02 1975

Shell-Ute Tribal 1-33Z2
(D)
16,200' Wasatch Test
KB 6057', GL 6029'
7" csg @ 12,358'
5" csg @ 16,196'

TD 16,200. PB 16,095. Flowing. On 24-hr test, flwd 1182 BO, 6 BW, 278 MCF gas thru 8/64" chk w/2000 psi FTP.

JUL 03 1975

Shell-Ute Tribal 1-33Z2
(D.)
16,200' Wasatch Test
KB 6057', GL 6029
7" csg @ 12,358'
5" liner @ 16,196'

TD 16,200. PB 16,095. OIL WELL COMPLETE. On 24 test flwd 1108 bbls oil, 3 BW, 539 MCF gas, GOR 486 Gravity 40.0 deg API, 11/64" choke, 1800 psi FTP from Flagstaff gross perfs 14,507-15,497 and 15,501-16,054. KB EL 6059. Completion date 5/31/75. Test date 7/3/75.
Log Tops:
TGR 3 10,195 (-4136)
Wasatch 11,452 (-5393)
Flagstaff "D" Marker 14,487 (-8428)
FINAL REPORT

JUL 07 1975

SHELL OIL CO.
RM 62 (Rev. 8-72)

CASING AND CEMENTING

Field BLUEBELL Well UTE 1-33Z2

Job: 5 " O.D. Casing/Liner. Ran to 16,196 feet (KB) on 2-12, 1975

Jts.	Wt.	Grade	Thread	New	Feet	From KB CHF	To CHF
Burns Liner Hanger					8.40	12,109.24	12,117.64
102	18#	JL95	SFJP		3956.90	12,117.64	16,074.54
Halib self fill float collar					1.70	16,074.54	16,076.24
3	18#	JL95	SFJP		117.47	16,076.24	16,193.71
Halib Self Fill Shoe					2.29	16,193.71	16,196.00

Casing Hardware:

Float shoe and collar type Halliburton Self Fill

Centralizer type and product number B+W

Centralizers installed on the following joints 1-6' above shoe 20 every 120' from 16,120

Other equipment (liner hanger, D.V. collar, etc.) Burns liner hanger top @ 12,109

Cement Volume:

Caliper type FDC. Caliper volume 1213 ft^3 + excess over caliper 203 ft^3 + float collar to shoe volume 12 ft^3 + liner lap 19 ft^3 + cement above liner 43 ft^3 = 1590 ft^3 (Total Volume).

Cement:

Preflush–Water _____ bbls, other 13.5 ppg CMT Volume 10 bbls

First stage, type and additives "G" w/2% Gel 30% Silica Flour 1.5% R-5 1.5% D31. Weight 15 lbs/gal, yield _____ ft^3/sk, volume 941 sx. Pumpability 4 hours at 200 °F.

Second stage, type and additives _____. Weight _____ lbs/gal, yield _____ ft^3/sk, volume _____ sx. Pumpability _____ hours at _____ °F.

Cementing Procedure:

Rotate/reciprocate _____

Displacement rate 3-4 B/M

Percent returns during job 95-100%

Bumped plug at 7:05 AM/~~PM~~ with 1000 psi. Bled back ½ bbls. Hung csg with _____ lbs on slips. over circ

Remarks:

Drilling Foreman John C. Sheehan

Date 2-13-75

SHELL OIL CO.
RMOC-3 (Rev. 8 72)

CASING AND CEMENTING

Field Bluebell Well Ute 1-33Z2

Job: 5 " O.D. Casing/Liner. Ran to 12,109 feet (KB) on 4-7, 1975

Jts.	Wt.	Grade	Thread	New	Feet	From	To
						KB	CHF
Scab Liner						CHF	
Burns hanger					8.40	8,103.09	8,111.49
95	18#	N-80	Hydrill		3,906.21	8,111.49	12,017.70
Halco diff. fill float collar					1.71	12,017.70	12,019.41
2	18#	N-80	Hydrill		86.04	12,019.41	12,105.45
Packer shoe					3.55	12,105.45	12,109.00

Casing Hardware:

Float shoe and collar type Burns Packer Shoe - Halco diff fill float collar

Centralizer type and product number Weatherford 19 - solid type & 30 spring type centralizers

Centralizers installed on the following joints

Other equipment (liner hanger, D.V. collar, etc.)

Cement Volume:

Caliper type . Caliper volume ft^3 + excess over caliper ft^3 + float collar to shoe volume 9 ft^3 + liner lap 314 ft^3 + cement above liner 43 ft^3 = 366 ft^3 (Total Volume).

Cement: Cement and water

Preflush—Water 10 bbls, other Volume bbls

First stage, type and additives Class G w/1% D 31 .3% of 1% of HR5 . Weight 15.9 lbs/gal, yield 114 ft^3/sk, volume 321 sx. Pumpability 3 hours at 210 °F.

Second stage, type and additives . Weight lbs/gal, yield ft^3/sk, volume sx. Pumpability hours at °F.

Cementing Procedure:

Rotate/reciprocate

Displacement rate 3+ bbl/min

Percent returns during job 100%

Bumped plug at AM/PM with psi. Bled back bbls. Hung csg with lbs on slips.

Remarks:

Completed @ 9:35 PM 4-7-75. Did not bump plug; over displaced 1.3 bbls-Bottom packer held but slips would not hold on hanger

Drilling Foreman Dick Landers

Date 4-7-75

SHELL OIL CO.
RM 52 (Rev. 8 72)

CASING AND CEMENTING

Field Bluebell Well Ute 1-33Z2

Job: 13-3/8 " O.D. Casing/Liner. Ran to 323 feet (KB) on 10/11, 1974

Jts.	Wt.	Grade	Thread	New	Feet	From	To
					33.45	KB	CHF
8	68#	K-55	ST&C	New	288.37	CHF	321.82
Davis Shoe					1.18	321.82	323.00

Casing Hardware:

Float shoe and collar type Davis 13-3/8 Reg Guide Shoe

Centralizer type and product number Halco

Centralizers installed on the following joints 1 @ 315.82, 1 @ 271.87, 1 @ 227.87

Other equipment (liner hanger, D.V. collar, etc.)

Cement Volume:

Caliper type . Caliper volume 228 ft^3 + excess over caliper 228 ft^3 + float collar to shoe volume ft^3 + liner lap ft^3 + cement above liner ft^3 = ft^3 (Total Volume).

Cement:

Preflush—Water 30 bbls, other Volume bbls

First stage, type and additives Class "G" w/3% $CaCl_2$. Weight 15.9 lbs/gal, yield 1.14 ft^3/sk, volume 400 sx. Pumpability 1.5 hours at °F.

Second stage, type and additives . Weight lbs/gal, yield ft^3/sk, volume sx. Pumpability hours at °F.

Cementing Procedure:

Rotate/reciprocate No

Displacement rate 6 B/M

Percent returns during job 100%, 70% of cmt returned

Bumped plug at AM/PM with psi. Bled back bbls. Hung csg with lbs on slips.

Remarks:

Completed pmp'g @ 3:25 a.m. 10/11/74. Displaced w/40 bbls wtr. Did not use insert float or a plug.

Drilling Foreman Dick Landers

Date 10/11/74

SHELL OIL CO.
RM 62 (Rev. 8 72)

CASING AND CEMENTING

Field Bluebell Well Ute 1-33Z2

Job: 9-5/8 " O.D. Casing/Liner. Ran to 7012 feet (KB) on 11/10, 1974

Jts.	Wt.	Grade	Thread	New	Feet	From	To
					33.45	KB	CHF
2	40#	K-55	ST&C	New	37.99	CHF	71.44
167	36#	K-55	LT&C	New	6,843.01	71.44	6,914.45
Diff Float					2.29	6,914.45	6,916.74
2	40#	K-55	ST&C	New	94.21	6,916.74	7,010.95
Davis Shoe					1.05	7,010.95	7,012.00

Casing Hardware:

Float shoe and collar type Reg Guide Shoe, Diff Fill Float - Hal

Centralizer type and product number Halliburton

Centralizers installed on the following joints 1 6' above shoe 6,872.62 - 1 @ 6,750.17, 1 @ 6,627.01

Other equipment (liner hanger, D.V. collar, etc.)

Cement Volume:

Caliper type _____. Caliper volume _____ ft^3 + excess over caliper _____ ft^3 + float collar to shoe volume _____ ft^3 + liner lap _____ ft^3 + cement above liner _____ ft^3 = _____ ft^3 (Total Volume).

Cement:

Preflush–Water 20 bbls, other _____ Volume _____ bbls

First stage, type and additives Lite w/.2% R-5. Weight 12.4 lbs/gal, yield 3.04 ft^3/sk, volume 312 sx. Pumpability 4 hours at 125 °F.

Second stage, type and additives Class "G" w/.2% R-5. Weight 15.9 lbs/gal, yield 1.14 ft^3/sk, volume 226 sx. Pumpability 4 hours at 125 °F.

Cementing Procedure:

~~Rotate~~/reciprocate ~~while cementing~~

Displacement rate 3 B/M

Percent returns during job 100%

Bumped plug at _____ AM/PM with _____ psi. Bled back _____ bbls. Hung csg with _____ lbs on slips.

Remarks:

Did not bump plug. Overdisplaced 2 bbls. Float did not hold. Started circ'g w/rig pmp @ 800#; csg head blew out (csg was approx 30' above table). Layed top jt down, screwed head back in & welded. No one was injured while steel hoses & head fell. Completed job. Bullheaded 600 cu ft of lite cmt into 13-3/8 & 9-5/8 annulus; 400# while cmt'g.

Drilling Foreman Dick Landers

Date 11/11/74

SHELL OIL CO.
RM 62 (Rev. 8 72)

CASING AND CEMENTING

Field Altamont Well Ute 1-33Z2

Job: 7 " O.D. Casing/Liner. Ran to 12,358 feet (KB) on 12/30, 1974

Jts.	Wt.	Grade	Thread	New	Feet	From	To
					31.50	KB	CHF
						CHF	
275	26#	S-95	LT&C	New	12,182.94		12,214.44
Float Collar					1.90	12,214.44	12,216.34
3	26#	S-95	LT&C	New	139.32	12,216.34	12,355.66
Float Shoe					2.40	12,355.66	12,358.06

Casing Hardware:

Float shoe and collar type Hal self-filling, ball activated

Centralizer type and product number Hal latch-on

Centralizers installed on the following joints 6' above shoe on 2nd, 5th, 8th & 11th jts

Other equipment (liner hanger, D.V. collar, etc.)

Cement Volume:

Caliper type FDC. Caliper volume 1768 ft^3 + excess over caliper _____ ft^3 + float collar to shoe volume 28 ft^3 + liner lap _____ ft^3 + cement above liner _____ ft^3 = _____ ft^3 (Total Volume).

Cement:

Preflush—Water 20 bbls, other _____ Volume _____ bbls

First stage, type and additives BJ lite + .4% R-5. Weight 12.4 lbs/gal, yield 3.04 ft^3/sk, volume 425 sx. Pumpability 4 hours at 220 °F.

Second stage, type and additives Class "G" + .4% R-5. Weight 15.9 lbs/gal, yield 1.14 ft^3/sk, volume 417 sx. Pumpability 4 hours at 220 °F.

Cementing Procedure:

Rotate/reciprocate Too much drag to reciprocate pipe

Displacement rate 3-4 B/M

Percent returns during job 75%

Bumped plug at 6:15 ~~AM~~/PM with 3000 psi. Bled back 5-1/2 bbls. Hung csg with 310,000 lbs on slips.

Remarks:

Lost full returns on last 90 bbls to displace

Drilling Foreman C. Grady

Date 12/30/74

SHELL OIL CO.
RM 62 (Rev. 8 72)

CASING AND CEMENTING

Field Bluebell Well Ute 1-33Z2

Job: 13-3/8 " O.D. Casing/Liner. Ran to 323 feet (KB) on 10/11, 1974

Jts.	Wt.	Grade	Thread	New	Feet	From	To
					33.45	KB	CHF
8	68#	K-55	ST&C	New	288.37	CHF	321.82
Davis Shoe					1.18	321.82	323.00

Casing Hardware:

Float shoe and collar type Davis 13-3/8 Reg Guide Shoe

Centralizer type and product number Halco

Centralizers installed on the following joints 1 @ 315.82, 1 @ 271.87, 1 @ 227.87

Other equipment (liner hanger, D.V. collar, etc.)

Cement Volume:

Caliper type . Caliper volume 228 ft^3 + excess over caliper 228 ft^3 + float collar to shoe volume ft^3 + liner lap ft^3 + cement above liner ft^3 = ft^3 (Total Volume).

Cement:

Preflush–Water 30 bbls, other Volume bbls

First stage, type and additives Class "G" w/3% $CaCl_2$. Weight 15.9 lbs/gal, yield 1.14 ft^3/sk, volume 400 sx. Pumpability 1.5 hours at °F.

Second stage, type and additives . Weight lbs/gal, yield ft^3/sk, volume sx. Pumpability hours at °F.

Cementing Procedure:

Rotate/reciprocate No

Displacement rate 6 B/M

Percent returns during job 100%, 70% of cmt returned

Bumped plug at AM/PM with psi. Bled back bbls. Hung csg with lbs on slips.

Remarks:

Completed pmp'g @ 3:25 a.m. 10/11/74. Displaced w/40 bbls wtr. Did not use insert float or a plug.

Drilling Foreman Dick Landers

Date 10/11/74

SHELL OIL CO.
RM 62 (Rev. 8 72)

CASING AND CEMENTING

Field Bluebell Well Ute 1-33Z2

Job: 9-5/8 " O.D. Casing/Liner. Ran to 7012 feet (KB) on 11/10, 1974

Jts.	Wt.	Grade	Thread	New	Feet	From	To
					33.45	KB	CHF
2	40#	K-55	ST&C	New	37.99	CHF	71.44
167	36#	K-55	LT&C	New	6,843.01	71.44	6,914.45
Diff Float					2.29	6,914.45	6,916.74
2	40#	K-55	ST&C	New	94.21	6,916.74	7,010.95
Davis Shoe					1.05	7,010.95	7,012.00

Casing Hardware:

Float shoe and collar type Reg Guide Shoe, Diff Fill Float - Hal

Centralizer type and product number Halliburton

Centralizers installed on the following joints 1 6' above shoe 6,872.62 - 1 @ 6,750.17, 1 @ 6,627.01

Other equipment (liner hanger, D.V. collar, etc.)

Cement Volume:

Caliper type _____. Caliper volume _____ ft^3 + excess over caliper _____ ft^3 + float collar to shoe volume _____ ft^3 + liner lap _____ ft^3 + cement above liner _____ ft^3 = _____ ft^3 (Total Volume).

Cement:

Preflush–Water 20 bbls, other _____ Volume _____ bbls

First stage, type and additives Lite w/.2% R-5. Weight 12.4 lbs/gal, yield 3.04 ft^3/sk, volume 312 sx. Pumpability 4 hours at 125 °F.

Second stage, type and additives Class "G" w/.2% R-5. Weight 15.9 lbs/gal, yield 1.14 ft^3/sk, volume 226 sx. Pumpability 4 hours at 125 °F.

Cementing Procedure:

~~Rotate~~/reciprocate while cementing

Displacement rate 3 B/M

Percent returns during job 100%

Bumped plug at _____ AM/PM with _____ psi. Bled back _____ bbls. Hung csg with _____ lbs on slips.

Remarks:

Did not bump plug. Overdisplaced 2 bbls. Float did not hold. Started circ'g w/rig pmp @ 800#; csg head blew out (csg was approx 30' above table). Layed top jt down, screwed head back in & welded. No one was injured while steel hoses & head fell. Completed job. Bullheaded 600 cu ft of lite cmt into 13-3/8 & 9-5/8 annulus; 400# while cmt'g.

Drilling Foreman Dick Landers

Date 11/11/74

SHELL OIL CO.
RM 62 (Rev. 8 72)

CASING AND CEMENTING

Field Altamont Well Ute 1-33Z2

Job: 7 " O.D. Casing/Liner. Ran to 12,358 feet (KB) on 12/30, 1974

Jts.	Wt.	Grade	Thread	New	Feet	From	To
					31.50	KB	CHF
						CHF	
275	26#	S-95	LT&C	New	12,182.94		12,214.44
Float Collar					1.90	12,214.44	12,216.34
3	26#	S-95	LT&C	New	139.32	12,216.34	12,355.66
Float Shoe					2.40	12,355.66	12,358.06

Casing Hardware:

Float shoe and collar type Hal self-filling, ball activated

Centralizer type and product number Hal latch-on

Centralizers installed on the following joints 6' above shoe on 2nd, 5th, 8th & 11th jts

Other equipment (liner hanger, D.V. collar, etc.)

Cement Volume:

Caliper type FDC. Caliper volume 1768 ft^3 + excess over caliper _____ ft^3 + float collar to shoe volume 28 ft^3 + liner lap _____ ft^3 + cement above liner _____ ft^3 = _____ ft^3 (Total Volume).

Cement:

Preflush–Water 20 bbls, other _____ Volume _____ bbls

First stage, type and additives BJ lite + .4% R-5. Weight 12.4 lbs/gal, yield 3.04 ft^3/sk, volume 425 sx. Pumpability 4 hours at 220 °F.

Second stage, type and additives Class "G" + .4% R-5. Weight 15.9 lbs/gal, yield 1.14 ft^3/sk, volume 417 sx. Pumpability 4 hours at 220 °F.

Cementing Procedure:

Rotate/reciprocate Too much drag to reciprocate pipe

Displacement rate 3-4 B/M

Percent returns during job 75%

Bumped plug at 6:15 ~~AM~~/PM with 3000 psi. Bled back 5-1/2 bbls. Hung csg with 310,000 lbs on slips.

Remarks:

~~Lost full returns on last 90 bbls to displace~~

Drilling Foreman C. Grady

Date 12/30/74

SHELL OIL CO.
RM-62 (Rev. 8 72)

CASING AND CEMENTING

Field BLUEBELL Well UTE 1-33Z2

Job: 5 " O.D. Casing/Liner. Ran to 16,196 feet (KB) on 2-12, 1975

Jts.	Wt.	Grade	Thread	New	Feet	From KB CHF	To CHF
Burns Liner Hanger					8.40	12,109.24	12,117.64
102	18#	JL95	SFJP		3956.90	12,117.64	16,074.54
Halib self fill float collar					1.70	16,074.54	16,076.24
3	18#	JL95	SFJP		117.47	16,076.24	16,193.71
Halib Self Fill Shoe					2.29	16,193.71	16,196.00

Casing Hardware:

Float shoe and collar type Halliburton Self Fill

Centralizer type and product number B+W

Centralizers installed on the following joints 1-6' above shoe 20 every 120' from 16,120.

Other equipment (liner hanger, D.V. collar, etc.) Burns liner hanger top @ 12,109

Cement Volume:

Caliper type FDC. Caliper volume 1213 ft^3 + excess over caliper 203 ft^3 + float collar to shoe volume 12 ft^3 + liner lap 19 ft^3 + cement above liner 43 ft^3 = 1590 ft^3 (Total Volume).

Cement:

Preflush–Water _____ bbls, other 13.5 ppg CMT Volume 10 bbls

First stage, type and additives "G" w/2% Gel 30% Silica Flour 1.5% R-5 1.5% D31. Weight 15 lbs/gal, yield _____ ft^3/sk, volume 941 sx. Pumpability 4 hours at 200 °F.

Second stage, type and additives _____. Weight _____ lbs/gal, yield _____ ft^3/sk, volume _____ sx. Pumpability _____ hours at _____ °F.

Cementing Procedure:

Rotate/reciprocate _____

Displacement rate 3-4 B/M

Percent returns during job 95-100%

Bumped plug at 7:05 AM/~~PM~~ with 1000 over circ psi. Bled back ½ bbls. Hung csg with _____ lbs on slips.

Remarks:

Drilling Foreman John C Sheehan

Date 2-13-75

SHELL OIL CO.
RM-62 (Rev. 8 72)

CASING AND CEMENTING

Field Bluebell Well Ute 1-33Z2

Job: 5 " O.D. Casing/Liner. Ran to 12,109 feet (KB) on 4-7, 1975

Jts.	Wt.	Grade	Thread	New	Feet	From KB CHF	To CHF
Scab Liner							
Burns hanger					8.40	8,103.09	8,111.49
95	18#	N-80	Hydrill		3,906.21	8,111.49	12,017.70
Halco diff. fill float collar					1.71	12,017.70	12,019.41
2	18#	N-80	Hydrill		86.04	12,019.41	12,105.45
Packer shoe					3.55	12,105.45	12,109.00

Casing Hardware:

Float shoe and collar type Burns Packer Shoe - Halco diff fill float collar

Centralizer type and product number Weatherford 19 - solid type & 30 spring type centralizers

Centralizers installed on the following joints

Other equipment (liner hanger, D.V. collar, etc.)

Cement Volume:

Caliper type . Caliper volume ft^3 + excess over caliper ft^3 + float collar to shoe volume 9 ft^3 + liner lap 314 ft^3 + cement above liner 43 ft^3 = 366 ft^3 (Total Volume).

Cement: Cement and water

Preflush–Water 10 bbls, other Volume bbls

First stage, type and additives Class G w/1% D 31 .3% of 1% of HR5 . Weight 15.9 lbs/gal, yield 114 ft^3/sk, volume 321 sx. Pumpability 3 hours at 210 °F.

Second stage, type and additives . Weight lbs/gal, yield ft^3/sk, volume sx. Pumpability hours at °F.

Cementing Procedure:

Rotate/reciprocate

Displacement rate 3+ bbl/min

Percent returns during job 100%

Bumped plug at AM/PM with psi. Bled back bbls. Hung csg with lbs on slips.

Remarks:

Completed @ 9:35 PM 4-7-75. Did not bump plug; over displaced 1.3 bbls-Bottom packer held but slips would not hold on hanger

Drilling Foreman Dick Landers

Date 4-7-75

FORM OGC-8-X
FILE IN QUADRUPLICATE

STATE OF UTAH
DEPARTMENT OF NATURAL RESOURCES
DIVISION OF OIL AND GAS CONSERVATION
1588 West North Temple
Salt Lake City, Utah 84116

REPORT OF WATER ENCOUNTERED DURING DRILLING

Well Name and Number Ute Tribal 1-33Z2

Operator Shell Oil Company
Address 1700 Broadway
Denver, Colorado 80202

Contractor Parker Drilling Co.
Address 518 National Bank of Tulsa Building
Tulsa, Oklahoma 74103

Location SW 1/4, NE 1/4, Sec. 33 ; T. 1 N; R. 2 E; Duchesne County

Water Sands:

	Depth: From-	To-	Volume: Flow Rate or Head -	Quality: Fresh or Salty -
1.			No water zones tested or evaluated	
2.				
3.				
4.				
5.				

(Continue on Reverse Side if Necessary)

Formation Tops:

NOTE: (a) Upon diminishing supply of forms, please inform this office.
(b) Report on this form as provided for in Rule C-20, General Rules And Regulations and Rules of Practice and Procedure.
(c) If a water quality analysis has been made of the above reported zone, please forward a copy along with this form.

Form 9-331
(May 1963)

UNITED STATES
DEPARTMENT OF THE INTERIOR
GEOLOGICAL SURVEY

SUBMIT IN TRIPLICATE*
(Other instructions on reverse side)

Form approved.
Budget Bureau No. 42-R1424.

SUNDRY NOTICES AND REPORTS ON WELLS

(Do not use this form for proposals to drill or to deepen or plug back to a different reservoir. Use "APPLICATION FOR PERMIT—" for such proposals.)

Proposed

1. OIL WELL [XX] GAS WELL [ ] OTHER

2. NAME OF OPERATOR
Shell Oil Company

3. ADDRESS OF OPERATOR
1700 Broadway, Denver, Colorado 80202

4. LOCATION OF WELL (Report location clearly and in accordance with any State requirements.* See also space 17 below.)
At surface
2230' FNL and 1582' FEL Section 33

5. LEASE DESIGNATION AND SERIAL NO.
Tribal 14-20-H62-1703A

6. IF INDIAN, ALLOTTEE OR TRIBE NAME
Ute Tribal

7. UNIT AGREEMENT NAME

8. FARM OR LEASE NAME
Ute

9. WELL NO.
1-33Z2

10. FIELD AND POOL, OR WILDCAT
Bluebell

11. SEC., T., R., M., OR BLK. AND SURVEY OR AREA
SW/4 NE/4 Section 33-T1N-R2W, USM

14. PERMIT NO.

15. ELEVATIONS (Show whether DF, RT, GR, etc.)
6029 GL (ungraded)

12. COUNTY OR PARISH
Duchesne

13. STATE
Utah

16. Check Appropriate Box To Indicate Nature of Notice, Report, or Other Data

NOTICE OF INTENTION TO:				SUBSEQUENT REPORT OF:			
TEST WATER SHUT-OFF	[ ]	PULL OR ALTER CASING	[ ]	WATER SHUT-OFF	[ ]	REPAIRING WELL	[ ]
FRACTURE TREAT	[ ]	MULTIPLE COMPLETE	[ ]	FRACTURE TREATMENT	[ ]	ALTERING CASING	[ ]
SHOOT OR ACIDIZE	[ ]	ABANDON*	[ ]	SHOOTING OR ACIDIZING	[ ]	ABANDONMENT*	[ ]
REPAIR WELL	[ ]	CHANGE PLANS	[ ]	(Other)			[ ]
(Other)			[ ]				

(NOTE: Report results of multiple completion on Well Completion or Recompletion Report and Log form.)

17. DESCRIBE PROPOSED OR COMPLETED OPERATIONS (Clearly state all pertinent details, and give pertinent dates, including estimated date of starting any proposed work. If well is directionally drilled, give subsurface locations and measured and true vertical depths for all markers and zones pertinent to this work.) *

As requested in your August 16, 1974 letter, attached is additional information on Blowout Preventer, Wellhead and Auxiliary Equipment and the Planned Casing, Cementing and Mud Programs for above-captioned well.

2 cc: Utah Oil and Gas Conservation Commission - w/attachments

18. I hereby certify that the foregoing is true and correct

SIGNED T. S. Mize TITLE Division Operations Engr. DATE 8/23/74

(This space for Federal or State office use)

APPROVED BY _____ TITLE _____ DATE _____
CONDITIONS OF APPROVAL, IF ANY:

*See Instructions on Reverse Side

BLOWOUT PREVENTION, WELLHEAD, AND AUXILIARY EQUIPMENT

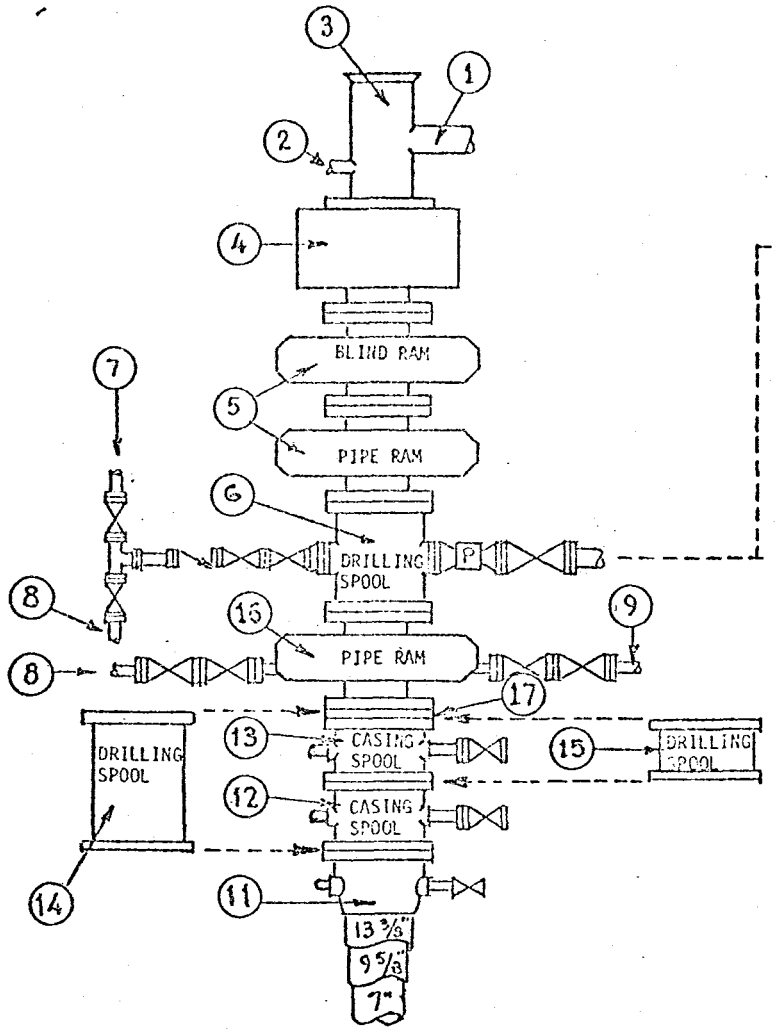

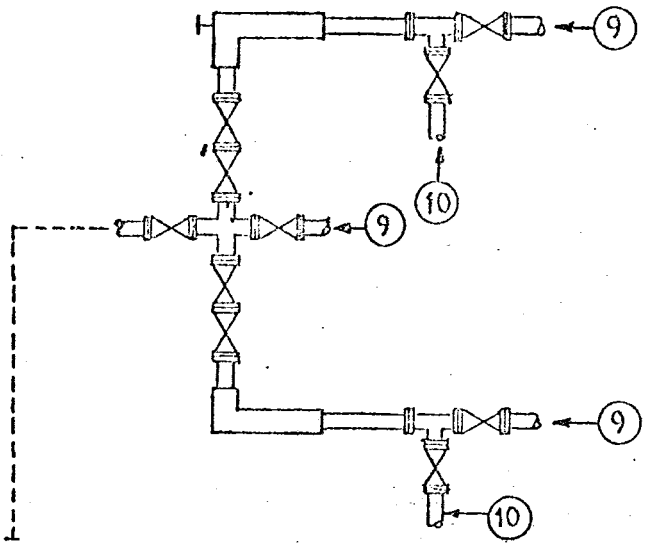

Auxiliary Equipment and Notes:

1. A 5000 psi WP safety valve, properly subed, shall be on the floor at all times.
2. An inside BOP shall be on the floor at all times.
3. An upper kelly cock to be used at all times.
4. Pipe rams shall be sized to match the drillpipe or casing being run in the hole.
5. Mud system monitoring equipment will be installed (with derrick floor indicators) and used throughout the period of drilling after mud up or upon reaching a depth at which abnormal pressures could occur.
6. BOP equipment shall be pressure tested upon installation and periodically thereafter. Operational test of ram type preventers shall be performed on each trip.

Item No.	Description
1	Mud return flow line
2	Fillup line - min. 2"
3	Drilling Nipple
4	13-5/8" - 5000 psi WP-Annular Bag Type BOP - Shaffer
	or Hydril
5	Two single or one dual - hydraulically operated -
	13-5/8" - 5000 psi WP - Ram Type BOP - Cameron Type U
	or Shaffer LWS
6	13-5/8" - 5000 psi WP Drilling Spool
7	To mud pumps
8	To remote pump in station
9	To burn pit
10	To gas buster
11	12" - 3000 psi WP-Slip On and Weld-Casing Head
12	12" - 3000 psi WP x 10" - 5000 psi WP Casing Spool
13	10" - 5000 psi WP x 10" - 5000 psi WP Casing Spool
14	12" - 3000 psi WP x 13-5/8" - 5000 psi WP Drilling
	Spool - While Drilling 12-1/4" hole
15	10" - 5000 psi WP x 10" - 5000 psi WP Drilling Spool -
	While Drilling 8-3/4" hole
16	13-5/8" - 5000 psi - Hydraulically Operated - Cameron
	Type U - Ram Type BOP
17	13-5/8" - 5000 psi WP x 10" - 5000 psi WP Double Studded
	Adapter Flange

Well Name UTE 1-33Z2

Field Bluebell

County Duchesne

State Utah

Attachment No. 1

PLANNED

CASING, CEMENTING AND MUD PROGRAMS

CONDUCTOR CASING at approx. 300 '

Size	Weight	Grade	Connection	Length	Condition
13 3/8"	68 #/ft	K55	STC	300	New

Cement to be: Circulated to Surface

SURFACE CASING at approx. 7000 '

Sec. No.	Size	Weight	Grade	Connection	Length	Condition
1	9 5/8"	36 #/ft	K55	STC	7000	New

Cement to be: Circulated with fillup to 5000' - Bullhead annullus w/600 ft³

PROTECTIVE/PRODUCTION CASING at approx. 12,200 '

Sec. No.	Size	Weight	Grade	Connection	Length	Condition
1	7"	26 #/ft	S95	LTC	2700'	New
2	7"	26 #/ft	'S95'	LTC	9500'	New

Cement to be: Circulated with fillup to 9000'

PRODUCTION LINER at approx. 16,200 '

Sec. No.	Size	Weight	Grade	Connection	Length	Condition
1	5"	18 #/ft	S00S95	SFJP	3000	New
2	5"	18 #/ft	N80	SFJP	1000	New

Cement to be: circulated full length of liner

Max. Anticipated BHP: 10600 psi @ 16200 ft.

Drilling Fluid: 0 - 12200' Clear Fresh Water
12200' - 16200' Fresh Water/Gel/Chem weighted as required for well control

Well Name Ute 1-33Z2

Field Bluebell

County Duchesne

State Utah

Attachment No. 2

OIL WELL
SHELL OIL COMPANY
FROM: 10/9/74 - 7/7/75

LEASE UTE TRIBA
DIVISION WESTERN
COUNTY DUCHESNE

BLUEBELL
WELL NO. 1-33Z2
ELEV 6057 KB
STATE UTAH

UTAH
BLUEBELL

Shell-Ute Tribal 1-33Z2 (D) Parker #118 16,200' Wasatch Test KB 6057', GL 6029'	"FR" 100/76/1/100. Drilling. Located 2230' FNL and 1582' FEL, SW/4 NE/4 Section 33-T1N-R2W, Duchesne County, Utah. Elev: 6029 GL (ungraded), 6057 KB (KB to GL = 28') Shell's Working Interest: 100% This well is being drilled for routine development. Spudded 17-1/2" hole at 8:30 PM, 10/8/74. Mud: (.436) 8.4 x 44 OCT - 9 1974
Shell-Ute Tribal 1-33Z2 (D) Parker #118 16,200' Wasatch Test KB 6057', GL 6029'	323/76/2/223. Running csg. Dev: 1 deg at 225 and 1/2 deg at 323. Tripped for bit at 128'. Circ and reamed 1-1/4 hrs. OCT 10 1974
Shell-Ute Tribal 1-33Z2 (D) Parker #118 16,200' Wasatch Test KB 6057', GL 6029' 13-3/8" csg @ 323'	323/76/3/0. WOC. Ran 8 jts (334.97') 13-3/8", 68# K-55 csg and set at 323' w/centralizers at 315.82, 271.87 and 227.87. Cmtd w/400 sx Class "G" w/3% CaCl2. CIP at 3:25 AM, 10/11. Note: could not get csg down. Picked up reamer and reamed btm 60'. Csg went to btm OK. OCT 11 1974 Mud: (.494) 9.5 x 54 x 16.8
Shell-Ute Tribal 1-33Z2 (D) Parker #118 16,200' Wasatch Test KB 6057', GL 6029' 13-3/8" csg @ 323'	10/12: 323/76/4/0. Tearing out BOP. Welded on csg flange and hooked up BOP. Flange out of alignment. 10/13: 323/76/5/0. Drlg cmt. Welded on new CHF, nippled up and tested BOP and csg to 600 psi for 15 min. Tagged cmt 50' from shoe. Mud: (.431) 8.3 x 26 10/14: 390/76/6/67. Tripping in. Dev: 3/4 deg at 390. Down 11-1/2 hrs for rotary table repair. OCT 14 1974 Mud: (.436) 8.4 x 26
Shell-Ute Tribal 1-33Z2 (D) Parker #118 16,200' Wasatch Test KB 6057', GL 6029' 13-3/8" csg @ 323'	1217/76/7/827. Drilling. OCT 15 1974
Shell-Ute Tribal 1-33Z2 (D) Parker #118 16,200' Wasatch Test KB 6057', GL 6029' 13-3/8" csg @ 323'	1822/76/8/605. Tripping for bit. Dev: 3/4 deg at 1276. Changed bit at 1276 and reamed 60' to btm. Mud: (.431) 8.3 x 26 OCT 16 1974
Shell-Ute Tribal 1-33Z2 (D) Parker #118 16,200' Wasatch Test KB 6057', GL 6029' 13-3/8" csg @ 323'	2456/76/9/634. Tripping for fishing tools. Dev: 3/4 deg at 1276 and 1-1/4 deg at 1822. Twisted off losing 34,000#. OCT 17 1974 Mud: (.431) 8.3 x 26

Shell-Ute Tribal 1-33Z2 (D) Parker #118 16,200' Wasatch Test KB 6057', GL 6029' 13-3/8" csg @ 323'	2466/76/10/10. Drilling. Tripped in w/fishing tools and attempted to get over fish at top of btm 7" collar - control ring too small. Tripped for larger control ring and latched onto fish. Chained out and checked collars finding two 7" collars w/cracked boxes. Mud: (.431) 8.3+ x 66 OCT 18 1974
Shell-Ute Tribal 1-33Z2 (D) Parker #118 16,200' Wasatch Test KB 6057', GL 6029' 13-3/8" csg @ 323'	10/19: 3110/76/11/644. Drilling. Mud: (.437) 8.3+ x 26 10/20: 3525/76/12/415. Drilling. Repaired water supply line. Several drilling breaks occurred in past 24 hrs followed by severe lost circ. Difficult to maintain enough water volume to provide clear water for drilling. Mud: (.432) 8.3+ x 26 10/21: 3745/76/13/220. Drilling. Dev: 1-1/2 deg at 3750. Checked DC. Mud: (.431) 8.3+ x 26 OCT 21 1974
Shell-Ute Tribal 1-33Z2 (D) Parker #118 16,200' Wasatch Test KB 6057', GL 6029' 13-3/8" csg @ 323'	3866/76/14/121. Drilling. Dev: 2 deg at 3834. Repaired throttles. Hooked up rotating head, air and blooie line. Aired up water. Reamed 50' to btm. Mud: (.442) 8.5 x 26 OCT 22 1974
Shell-Ute Tribal 1-33Z2 (D) Parker #118 16,200' Wasatch Test KB 6057'. GL 6029' 13-3/8" csg @ 323'	4125/76/15/259. Drilling. Repaired flow line. Mud: (.432) 8.3+ x 26 OCT 23 1974
Shell-Ute Tribal 1-33Z2 (D) Parker #118 16,200' Wasatch Test KB 6057', GL 6029' 13-3/8" csg @ 323'	4242/76/16/117. Drilling. Dev: 1-3/4 deg at 4149. Tripped and checked DC's. After trip lost circ, washed and reamed 110' to bottom. Hole took a lot of water, started air back up. Magnafluxed @ 4149. Mud: (.437) 8.4 x 26 OCT 24 1974
Shell-Ute Tribal 1-33Z2 (D) Parker #118 16,200' Wasatch Test KB 6057', GL 6029' 13-3/8" csg @ 323'	4542/76/17/300. Drilling w/wtr. Mud: (.437) 8.4 x 26 OCT 25 1974
Shell-Ute Tribal 1-33Z2 (D) Parker #118 16,200' Wasatch Test KB 6057', GL 6029' 13-3/8" csg @ 323'	10/26: 4759/76/18/217. Tripping. Magnafluxed DC's. Mud: (.431) 8.3+ x 26 10/27: 4919/76/19/160. Drilling. Dev: 1-1/2 deg at 4759. Magnafluxed DC. Changed out 1 9" DC w/cracked pin. Mud: (.431) 8.3+ x 26 10/28: 5130/76/20/211. Drilling w/wtr. Mud: (.442) 8.5 x 26 OCT 28 1974

Shell-Ute Tribal 1-33Z2 (D) Parker #118 16,200' Wasatch Test KB 6057', GL 6029' 13-3/8" csg @ 323'	5368/76/21/238. Drilling. Mud: (.431) 8.3+ (aerated wtr) OCT 29 1974
Shell-Ute Tribal 1-33Z2 (D) Parker #118 16,200' Wasatch Test KB 6057', GL 6029' 13-3/8" csg @ 323'	5541/76/22/173. Tripping in w/fishing tools. Twisted off at btm of 4th DC down 7". Top of fish at 5024. Left eleven 7" DC's, five 9" DC's, shock sub and three stabilizers in hole. Mud: (.431) 8.3+ x 26 OCT 30 1974
Shell-Ute Tribal 1-33Z2 (D) Parker #118 16,200' Wasatch Test KB 6057', GL 6029' 13-3/8" csg @ 323'	5555/76/23/14. Drilling. Laid down fishing tools and 4 collars (1- 9", 1- 7" w/cracked boxes and 2 damaged w/twist off). Reamed 3-1/2 hrs and resumed drlg. OCT 31 1974 Mud: (.431) 8.3+ x 26
Shell-Ute Tribal 1-33Z2 (D) Parker #118 16,200' Wasatch Test KB 6057', GL 6029' 13-3/8" csg @ 323'	5803/76/24/248. Drilling. Mud: (.431) 8.3+ x 26 NOV 1 1974
Shell-Ute Tribal 1-33Z2 (D) Parker #118 16,200' Wasatch Test KB 6057', GL 6029' 13-3/8" csg @ 323'	11/2: 6014/76/25/211. Drilling. Mud: (.431) 8.3+ x 26 11/3: 6202/76/26/188. Drilling. Mud: (.431) 8.3+ x 26 11/4: 6255/76/27/53. Reaming to btm. Dev: 1-1/4 deg at 6255. Worked stuck pipe 1-1/2 hrs and reamed tight hole 1-1/4 hrs. Tripped out and magnafluxed DC's - found no bad collars. NOV 4 1974 Mud: (.431) 8.3+ x 26
Shell-Ute Tribal 1-33Z2 (D) Parker #118 16,200' Wasatch Test KB 6057', GL 6029' 13-3/8" csg @ 323'	6502/76/28/247. Drilling. Finished reaming back to btm. Resumed drlg, working stuck pipe and reaming tight hole. NOV 5 1974 Mud: (.431) 8.3+ x 26
Shell-Ute Tribal 1-33Z2 (D) Parker #118 16,200' Wasatch Test KB 6057', GL 6029' 13-3/8" csg @ 323'	6766/76/29/264. Drilling. Started mudding up. NOV 6 1974 (.436) 8.4+ x 26

Shell-Ute Tribal 1-33Z2 (D) Parker #118 16,200' Wasatch Test KB 6057', GL 6029' 13-3/8" csg @ 323'	6783/76/30/17. Drilling. Dev: 1-1/4 deg at 6718. Tripped out checking and laying down DC's. Tenth 7" collar down (2nd collar above 9" DC) had cracked box, 6-5/8" OD fish neck x 25-1/2" long body x 2-1/4" ID and fifth 9" collar from btm had cracked pin, 8-5/16" OD fish neck x 31" long body x 8-5/8" OD x 2-7/8" ID. Made 64.23' SLC: 6782.27 = 6718.04. Washed 90' to btm. Mud: (.442) 8.5 x 30 x 32 NOV 7 1974
Shell-Ute Tribal 1-33Z2 (D) Parker #118 16,200' Wasatch Test KB 6057', GL 6029' 13-3/8" csg @ 323'	6913/76/31/130. Drilling. Mud: (.431) 8.3 x 34 x 26 NOV 8 1974
Shell-Ute Tribal 1-33Z2 (D) Parker #118 16,200' Wasatch Test KB 6057', GL 6029' 9-5/8" csg @ 7012'	11/9: 7005/76/32/92. Tripping. Circ 1-1/2 hrs. Mud: (.436) 8.4 x 39 x 18 11/10: 7012/76/33/7. Running csg. Tripped for bit at 7012, washing and reaming 15'. Laid down DC's and started running csg. Mud: (.436) 8.4 x 46 x 16.0 11/11: 7012/76/34/0. Nippling up BOP. Ran 167 jts 36# K-55 LT&C csg w/2 jts above and below of 40# K-55 ST&C (7028.86') setting shoe at 7012, centralizers at 6875.96, 6750.41 and 6628.97, and float at 6920.36. Cmtd 1st stage w/312 sx Lite w/0.2% R-5. Tailed in w/ 226 sx Class "G" w/0.2% R-5. CIP at 3:55 PM, 11/10. After getting on btm while circ w/ rig pump, had leak in cmt head. SD to tighten and attempted to circ again - pump press incr to 800 psi and blew cmt hd off. Laid down top jt and reinstalled cmt hd and welded to csg. Mud: (.447) 8.6 x 41 x 16 NOV 11 1974
Shell-Ute Tribal 1-33Z2 (D) Parker #118 16,200' Wasatch Test KB 6057', GL 6029' 9-5/8" csg @ 7012'	7012/76/35/0. Testing. BOP. Bullheaded 13-3/8 x 9-5/8 annulus w/600 CF BJ Lite. Nippled up BOP and started testing. NOV 12 1974 Mud: (.431) 8.3 x 26
Shell-Ute Tribal 1-33Z2 (D) Parker #118 16,200' Wasatch Test KB 6057', GL 6029' 9-5/8" csg @ 7012'	7037/76/36/25. Tripping for bit. Picked up and magna-fluxed DC's and tripped in hole, drlg float and cmt. Tested csg to 1000 psi, OK. Top of cmt @ 6881. NOV 13 1974 Mud: (.431) 8.3 x 26
Shell-Ute Tribal 1-33Z2 (D) Parker #118 16,200' Wasatch Test KB 6057', GL 6029' 9-5/8" csg @ 7012'	7122/76/37/85. Drilling. Ran in w/new bit, reaming to btm. NOV 14 1974 Mud: (.431) 8.3 x 26

Shell-Ute Tribal 1-33Z2 (D) Parker #118 16,200' Wasatch Test KB 6057', GL 6029' 9-5/8" csg @ 7012	7384/76/38/262. Drilling. Mud: (.431) 8.3 x 26 NOV 15 1974
Shell-Ute Tribal 1-33Z2 (D) Parker #118 16,200' Wasatch Test KB 6057', GL 6029' 9-5/8" csg @ 7012'	11/16: 7592/76/39/208. Tripping for bit. Mud: (.431) 8.3 x 26 11/17: 7780/76/40/188. Drilling. Dev: 3/4 deg at 7592. Checked DC's and subs, OK. Washed 30' to btm. Mud: (.431) 8.3 x 26 NOV 18 1974 11/18: 7977/76/41/197. Tripping for bit. Mud: (.431) 8.3 x 26
Shell-Ute Tribal 1-33Z2 (D) Parker #118 16,200' Wasatch Test KB 6057', GL 6029' 9-5/8" csg @ 7012'	7983/76/42/6. Tripping for mill. Dev: 1-3/4 deg at 7977. Tripped out making 4.5' SLC. Lost 3 cones on trip. Tripped in w/mill and milled on iron - hole appeared to clean up nicely. Made approx 1.5' of new hole when mill press'd up (Kutrite sheared off smoothly). Tripped in w/bit and attempted to get to btm. Got to within 2' of btm and got stuck when trying to rotate or pick up. NOV 19 1974 Mud: (.431) 8.3 x 26
Shell-Ute Tribal 1-33Z2 (D) Parker #118 16,200' Wasatch Test KB 6057', GL 6029' 9-5/8" csg @ 7012'	7984/76/43/1. Tripping out w/mill. Tripped in w/ reverse circ basket and picked up iron. Tripped out rec'g little iron. Tripped in w/mill and milled 3-3/4 hrs, milling 1' of new hole. Mud: (.431) 8.3 x 26 NOV 20 1974
Shell-Ute Tribal 1-33Z2 (D) Parker #118 16,200' Wasatch Test KB 6057', GL 6029' 9-5/8" csg @ 7012'	7984/76/44/0. Running in w/magnet. Finished pulling mill #1. Clnd jk baskets, rec'g 1/2 cup metal. Ran in w/mill #2 and milled on jk 3 hrs (appeared that jk was going above mill in wall of hole). Pulled mill, rec'g trace of jk. Ran in w/magnet and washed and reamed 50' to btm and worked on jk. Chained out rec'g one cone and 2/3 of second cone. NOV 21 1974 Mud: (.431) 8.3 x 26
Shell-Ute Tribal 1-33Z2 (D) Parker #118 16,200' Wasatch Test KB 6057', GL 6029' 9-5/8" csg @ 7012'	7984/76/45/0. Tripping in w/bit. Finished running magnet, working magnet and jk subs 45 min. Pulled out rec'g heel row of two cones. Tripped in w/mill and milled on jk, making 16" new hole. Pulled mill - badly marked on outside. NOV 22 1974 Mud: Wtr
Shell-Ute Tribal 1-33Z2 (D) Parker #118 16,200' Wasatch Test KB 6057', GL 6029' 9-5/8" csg @ 7012'	11/23: 8103/76/46/119. Drilling. Finished in hole w/ new bit, reaming 150' to btm. Tripped for bit at 7996, finding 6 pcs of metal in jk sub. 11/24: 8354/76/47/251. Drilling. 11/25: 8499/76/48/145. Drilling. Dev: 3/4 deg at 8456. Tripped for bit at 8456, reaming 80' to btm. NOV 25 1974 Mud: Wtr

Shell-Ute Tribal 1-33Z2
(D) Parker #118
16,200' Wasatch Test
KB 6057', GL 6029'
9-5/8" csg @ 7012'

8832/76/49/333. Drilling.
Mud: (.431) 8.3 x 26

NOV 2 6 1974

Shell-Ute Tribal 1-33Z2
(D) Parker #118
16,200' Wasatch Test
KB 6057', GL 6029'
9-5/8" csg @ 7012'

8894/76/50/62. Drilling. Tripped for bit at 8876 and magnafluxed all DC's, OK. Washed and reamed 100' of out-of-gauge hole.
Mud: (.431) 8.3 x 26

NOV 2 7 1974

Shell-Ute Tribal 1-33Z2
(D) Parker #118
16,200' Wasatch Test
KB 6057', GL 6029'
9-5/8" csg @ 7012'

11/28: 9230/76/51/336. Drilling.
Mud: (.431) 8.3 x 26
11/29: 9455/76/52/225. Drilling. Dev: 3/4 deg at 9293. Tripped for bit at 9293, washing and reaming 20' to btm and circ out gas. Background gas: 15-45 units. Connection gas: 70-75 units. Trip gas: 100 units.
Mud: (.431) 8.3 x 26
11/30: 9875/76/53/420. Drilling. Background gas: 5-10 units. Connection gas: 45 units.
Mud: (.431) 8.3 x 26
12/1: 10,106/76/54/231. Drilling. Dev: 1 deg at 9996. Tripped for bit at 9996, breaking circ at 7000'. Hole giving back twice calculated displacement of DP. After circ btms up at 7000', SIDP press 100 psi. Tripped in and reamed 70' and circ btmd up. Hole making blk oil again while drlg. Background gas: 40-60 units. Connection gas: 250 units. Trip gas: not recorded - agitator plugged.
Mud: (.431) 8.3 x 26
12/2: 10,377/76/55/271. Drilling. Background gas: 125 units.
Mud: (.431) 8.3 x 26

DEC 2 - 1974

Shell-Ute Tribal 1-33Z2
(D) Parker #118
16,200' Wasatch Test
KB 6057', GL 6029'
9-5/8" csg @ 7012'

10,398/76/56/21. Tripping for bit. Checked for flow and circ btm up. Well flwd 96 bbls in 2.5 hrs (primarily formation wtr but w/sufficient gas and oil to mud up). Pulled to 9-5/8" csg shoe and mudded up to 9.4 w/mud cutting back to approx 8.8 from wtr below csg shoe.
Mud: (.488) 9.4 x 40 x 12.6

DEC 3 - 1974

Shell-Ute Tribal 1-33Z2
(D) Parker #118
16,200' Wasatch Test
KB 6057', GL 6029'
9-5/8" csg @ 7012'

10,495/76/57/97. Drilling. Background gas: 7 units. Connection gas: 30 units. Trip gas: 300 units.
Mud: (.468) 9.0 x 40 x 10.0

DEC 4 - 1974

Shell-Ute Tribal 1-33Z2
(D) Parker #118
16,200' Wasatch Test
KB 6057', GL 6029'
9-5/8" csg @ 7012'

10,626/76/58/131. Tripping for bit. Background gas: 7 units.
Mud: (.468) 9.0 x 36 x 10.4

DEC 5 - 1974

Shell-Ute Tribal 1-33Z2
(D) Parker #118
16,200' Wasatch Test
KB 6057', GL 6029'
9-5/8" csg @ 7012'

10,743/76/59/117. Drilling. Dev: 2 deg at 10,626.
Trip gas: 22 units, Connection gas: 7 units, Background gas: 3 units.
Mud: (.468) 9.0 x 39 x 12.4

DEC 6 - 1974

Shell-Ute Tribal 1-33Z2
(D) Parker #118
16,200' Wasatch Test
KB 6057', GL 6029'
9-5/8" csg @ 7012'

12/7: 10,809/76/60/66. Drilling. Dev: 1-3/4 deg at 10,806. Down 2-3/4 hrs for electrical and pump repairs. Background gas: 5 units. Connection gas: 10 units. Trip gas: 93 units.
Mud: (.468) 9.0 x 37 x 12.6
12/8: 10,900/76/61/91. Tripping and checking DC's. Magnafluxed all DC's and subs, OK. Background gas: 5 units. Connection gas: 10 units. Fm gas: 140 units.
Mud: (.468) 9.0 x 32 x 12.6
12/9: 10,998/76/62/98. Drilling. Tripped in w/new bit at 10,900. Background gas: 8 units. Connection gas: 12 units. Trip gas: 300 units.
Mud: (.478) 9.2 x 35 x 13.2

DEC 9 - 1974

Shell-Ute Tribal 1-33Z2
(D) Parker #118
16,200' Wasatch Test
KB 6057', GL 6029'
9-5/8" csg @ 7012'

11,079/76/63/81. Washing to btm w/new bit.
Mud: (.483) 9.3 x 38 x 11.8

DEC 10 1974

Shell-Ute Tribal 1-33Z2
(D) Parker #118
16,200' Wasatch Test
KB 6057', GL 6029'
9-5/8" csg @ 7012'

11,177/76/64/98. Tripping for bit.
Mud: (.488) 9.4 x 31 x 12.0

DEC 11 1974

Shell-Ute Tribal 1-33Z2
(D) Parker #118
16,200' Wasatch Test
KB 6057', GL 6029'
9-5/8" csg @ 7012'

11,234/76/65/57. Drilling. Dev: 1-1/2 deg at 11,197.
Tripped in w/new bit, reaming to btm. Packed swivel.
Mud: (.484) 9.3 x 32 x 12.4

DEC 12 1974

Shell-Ute Tribal 1-33Z2
(D) Parker #118
16,200' Wasatch Test
KB 6057', GL 6029'
9-5/8" csg @ 7012'

11,344/76/66/110. Drilling.
Mud: (.478) 9.2+ x 33 x 12

DEC 13 1974

Shell-Ute Tribal 1-33Z2 (D) Parker #118 16,200' Wasatch Test KB 6057', GL 6029' 9-5/8" csg @ 7012'	12/14: 11,397/76/67/53. Drilling. Dev: 1-1/2 deg at 11,352. Mud: (.494) 9.5 x 36 x 11.6 12/15: 11,491/76/68/94. Tripping for new bit. Mud: (.499) 9.6 x 33 x 11.0 12/16: 11,558/76/69/67. Drilling. Tripped in w/new bit, reaming to btm. Background gas: 7 units. Mud: (.499) 9.6 x 34 x 8.4 DEC 16 1974
Shell-Ute Tribal 1-33Z2 (D) Parker #118 16,200' Wasatch Test KB 6057', GL 6029' 9-5/8" csg @ 7012'	11,649/76/70/91. Drilling. Background gas: 6 units. Connection gas: 8 units. Mud: (.499) 9.6 x 33 x 8.0 DEC 17 1974
Shell-Ute Tribal 1-33Z2 (D) Parker #118 16,200' Wasatch Test KB 6057', GL 6029' 9-5/8" csg @ 7012'	11,727/76/71/78. Drilling. Background gas: 6 units. Connection gas: 8 units. Mud: (.494) 9.5 x 33 x 6.2 DEC 18 1974
Shell-Ute Tribal 1-33Z2 (D) Parker #118 16,200' Wasatch Test KB 6057', GL 6029' 9-5/8" csg @ 7012'	11,761/76/72/34. Drilling. Tripped for new bit at 11,752. Background gas: 6 units. Connection gas: 8 units. Mud: (.504) 9.7 x 34 x 6.4 DEC 19 1974
Shell-Ute Tribal 1-33Z2 (D) Parker #118 16,200' Wasatch Test KB 6057', GL 6029' 9-5/8" csg @ 7012'	11,833/76/73/72. Pulling to shoe. Backgrounnd gas: 6 units. Connection gas: 6 units. Drilled 18 hours. Lost all engines but one. Mud: (.494) 9.5 x 34 x 62 DEC 20 1974
Shell-Ute Tribal 1-33Z2 (D) Parker #118 16,200' Wasatch Test KB 6057', GL 6029' 9-5/8" csg @ 7012'	12/21: 11,876/76/74/43. Drilling. Down 10-1/2 hrs working on engines. Tripped in and resumed drlg. Background gas: 6 units. Trip gas: 135 units. Connection gas: 8 units. Mud: (.499) 9.6 x 34 x 5.6 12/22: 11,919/76/75/43. Tripping in w/new bit. Dev: 1 deg at 11,919. Mud: (.494) 9.5 x 38 x 4.8 12/23: 12,002/76/76/83. Drilling. Background gas: 12 units. Connection gas: 14 units. Mud: (.504) 9.7 x 34 x 4.4 DEC 23 1974
Shell-Ute Tribal 1-33Z2 (D) Parker #118 16,200' Wasatch Test KB 6057', GL 6029' 9-5/8" csg @ 7012'	12,034/76/77/34. Drilling. Tripped for new bit at 12,023. Made 23' SLC at 12,000': 11,354.24 = 11,331.24. Background gas: 15 units. Connection gas: 20 units. Trip gas: 150 units. Mud: (.499) 9.6 x 33 x 4.0 DEC 24 1974

Shell-Ute Tribal 1-33Z2 (D) Parker #118 16,200' Wasatch Test KB 6057', GL 6029' 9-5/8" csg @ 7012'	12/25: 12,145/76/78/111. Drilling. Background gas: 18 units. Connection gas: 25 units. Fm gas: 30 units. Mud: (.509) 9.8 x 38 x 3.4 12/26: 12,221/76/79/76. Drilling. Dev: 1 deg at 12,185. Tripped for new bit at 12,185. Washed to btm. Mud: (.504) 9.7 x 46 x 3.6 DEC 2 6 1974
Shell-Ute Tribal 1-33Z2 (D) Parker #118 16,200' Wasatch Test KB 6057', GL 6029' 9-5/8" csg @ 7012'	12,347/76/80/126. Drilling. Background gas: 15 units. Connection gas: 35 units. Fm gas: 80 units. Mud: (.514) 9.9 x 46 x 3.4 DEC 2 7 1974
Shell-Ute Tribal 1-33Z2 (D) Parker #118 16,200' Wasatch Test KB 6057', GL 6029' 9-5/8" csg @ 7012'	12/28: 12,358/76/81/11. Logging. Dev: 1 deg at 12,358. Tripped out and circ 2 hrs for logs. Ran DIL and CNL/FDC. Mud: (.514) 9.9 x 47 x 3.2 (1% oil) 12/29: 12,358/76/82/0. Laying down DP. Finished logging as follows: BHCS-GR w/cal. Logger's TD 12,374. Mud: (.520) 10.0 x 45 x 3.0 (1% oil) 12/30: 12,358/76/83/0. Running 7" csg. Finished laying down DP and DC's. Broke down kelly and pulled wear bushing. RU csg crew and started running 7". Mud: (.488) 9.4 x 34 x 4.0 DEC 3 0 1974
Shell-Ute Tribal 1-33Z2 (D) Parker #118 16,200' Wasatch Test KB 6057', GL 6029' 7" csg @ 12,358'	12,358/76/84/0. Nippling up BOP. Finished running 7" csg as follows: Ran 278 jts S-95, 26#, LT&C w/FC at 12,216 and shoe at 12,358. Lost mud while running pipe and circ csg. WO mud to displace cmt. Cmtd w/ 425 sx Lite w/0.4% R-5 (12.4 ppg slurry) followed by 417 sx Class "G" w/0.4% R-5 (15.9 ppg slurry). Had 75% returns while cmtg. Lost full returns on last 90 bbls of displacement. Calculated displacement 468 bbls. Used 454 bbls to displace. Circ last 30 min at 2000 psi and finished displacement w/3000 psi. CIP at 6:15 PM. Had gradual bleeding indicating float not holding. Nippled down BOP, set slips, cut off csg and installed flange. Mud: (.530) 10.2 x 41 x 3.9 DEC 3 1 1974
Shell-Ute Tribal 1-33Z2 (D) Parker #118 16,200' Wasatch Test KB 6057', GL 6029' 7" csg @ 12,358'	1/1: 12,358/76/85/0. Changing seals and rubber in preventer. Finished nippling up. Tested spool to 3500 psi. Mud: (.514) 9.9 x 34 x 3.8 1/2: 12,358/76/86/0. RU for DP. Finished working on preventer. Repaired hydraulic lines and tested BOPE, changing out two. Retested and repaired leaks. JAN - 2 1975

Shell-Ute Tribal 1-33Z2
(D) Parker #118
16,200' Wasatch Test
KB 6057', GL 6029'
7" csg @ 12,358'

12,358/76/87/0. Picking up 3-1/2" DP. Finished RU for DC's and DP. Picked up 4-5/8" DC's and 3-1/2" DP.

JAN - 3 1975

Shell-Ute Tribal 1-33Z2
(D) Parker #118
16,200' Wasatch Test
KB 6057', GL 6029'
7" csg @ 12,358'

1/4: 12,360/76/88/2. Tripping in hole. Found top of cmt at 12,213. Tried to unplug std pipe to pump and flowline. CO cmt from 12,213-12,352. Tested csg to 2000 psi. Drld shoe, running on iron. Strapped out for dia bit.
Mud: (.520) 10.0 x 35 x 3.5
1/5: 12,514/76/89/154. Drilling. Background gas: 5 units.
Mud: (.525) 10.1 x 39 x 2.7
1/6: 12,706/76/90/192. Drilling.
Mud: (.530) 10.2 x 42 x 3.9 (1#/bbl LCM)

JAN - 6 1975

Shell-Ute Tribal 1-33Z2
(D) Parker #118
16,200' Wasatch Test
KB 6057', GL 6029'
7" csg @ 12,358'

12,844/76/91/138. Drilling. Stuck 4' off btm at 12,736' while trying to make connection. Worked stuck pipe and reamed tight hole.
Mud: (.535) 10.3+ x 47 x 4.4 (0.6#/bbl LCM)

JAN - 7 1975

Shell-Ute Tribal 1-33Z2
(D) Parker #118
16,200' Wasatch Test
KB 6057', GL 6029'
7" csg @ 12,358'

12,955/76/92/111. Drilling.
Mud: (.525) 10.1 x 37 x 3.8

JAN - 8 1975

Shell-Ute Tribal 1-33Z2
(D) Parker #118
16,200' Wasatch Test
KB 6057', GL 6029'
7" csg @ 12,358'

12,997/76/93/42. Drilling. Tripped for bit at 12,974. Circ and reamed to btm.
Mud: (.535) 10.3+ x 41 x 3.9 (1% oil)

JAN - 9 1975

Shell-Ute Tribal 1-33Z2
(D) Parker #118
16,200' Wasatch Test
KB 6057', GL 6029'
7" csg @ 12,358'

13,175/76/94/178. Drilling.
Mud: (.546) 10.5 x 41 x 3.1 (1% oil)

JAN 10 1975

Shell-Ute Tribal 1-33Z2
(D) Parker #118
16,200' Wasatch Test
KB 6057', GL 6029'
7" csg @ 12,358'

1/11: 13,335/76/95/160. Drilling.
Mud: (.556) 10.7 x 44 x 3.7 (1% oil)
1/12: 13,424/76/96/89. Pulling to shoe. Kelly split just below top connection. Pulled to shoe and broke down in rat hole. Ran back to btm and started drlg. Swivel packing started breaking. Now pulling to shoe to change packing.
Mud: (.566) 10.9 x 45 x 3.5
1/13: 13,539/76/97/115. Drilling. Changed swivel packing and resumed drlg.
Mud: (.572) 11.0 x 43 x 3.5

JAN 13 1975

Shell-Ute Tribal 1-33Z2 (D) Parker #118 16,200' Wasatch Test KB 6057', GL 6029' 7" csg @ 12,358'	13,702/76/98/163. Drilling. Mud: (.582) 11.2+ x 46 x 3.6 (1% oil) JAN 14 1975
Shell-Ute Tribal 1-33Z2 (D) Parker #118 16,200' Wasatch Test KB 6057', GL 6029' 7" csg @ 12,358'	13,738/76/99/36. Drilling. Drld 3' and lost pump press. Laid down 24 jts S-135 DP and magnafluxed DC's and BHA finding washout in stabilizer box on stab above short DC. Bad DC's from btm of string up, #1 washed pin, #5 cracked box, #7, #8 and #38 cracked box, #34 swelled box. Changed out two stabs and picked up 32 jts newly hard-banded Grade "E" DP on top of DC's. Mud: (.587) 11.3 x 45 x 3.2 (1% oil) JAN 15 1975
Shell-Ute Tribal 1-33Z2 (D) Parker #118 16,200' Wasatch Test KB 6057', GL 6029' 7" csg @ 12,358'	13,956/76/100/218. Drilling. Background gas: 1-2 units. Mud: (.592) 11.4 x 46 x 3.7 (1% oil) JAN 16 1975
Shell-Ute Tribal 1-33Z2 (D) Parker #118 16,200' Wasatch Test KB 6057', GL 6029' 7" csg @ 12,358'	14,137/76/101/181. Drilling. Logged 1-1/2 to 2 units background, connection and fm gas. Mud: (.598) 11.5 x 46 x 3.9 (1% oil) JAN 17 1975
Shell-Ute Tribal 1-33Z2 (D) Parker #118 16,200' Wasatch Test KB 6057', GL 6029' 7" csg @ 12,358'	1/18: 14,212/76/102/75. Magnafluxing DC's. Lost 500 psi pump press. Checked pumps and sfc system - no leaks. Chained out of hole finding washout in box on 8th DC above bit. Started magnafluxing DC's, finding 2 w/cracked boxes, 1 w/washed out box and 1 w/washed out pin (job not completed). Mud: (.603) 11.6 x 44 x 3.3 (1% oil) 1/19: 14,336/76/103/124. Drilling. Finished magnafluxing DC's - found no add'l washouts or cracks. Tripped in and washed 10' of fill to btm. Mud: (.608) 11.7+ x 47 x 3.9 (1% oil) 1/20: 14,539/76/104/203. Drilling. Background gas: 2 units. Max gas: 3 units. Mud: (.618) 11.9 x 52 x 3.7 (1% oil) JAN 20 1975
Shell-Ute Tribal 1-33Z2 (D) Parker #118 16,200' Wasatch Test KB 6057', GL 6029' 7" csg @ 12,358'	14,649/76/105/110. Rig SD for electrical repair. Logged drlg break of 280 units gas at 14,641 w/some oil on pits. Last 7 hrs, gas fluctuated from 40 to 200 units. Down 7-1/4 hrs due to electrical problems. Mud: (.639) 12.3 x 50 x 4.3 (4% oil) JAN 21 1975

Shell-Ute Tribal 1-33Z2 (D) Parker #118 16,200' Wasatch Test KB 6057', GL 6029' 7" csg @ 12,358'	14,649/76/106/0. SD, WO parts for electrical panel. Down 24 hrs repairing elec system. Gas fluctuated from 100-200 units w/5-10 units background last 6 hrs. Mud: (.670) 12.9+ x 58 x 4.3 (3% oil) JAN 22 1975
Shell-Ute Tribal 1-33Z2 (D) Parker #118 16,200' Wasatch Test KB 6057', GL 6029' 7" csg @ 12,358'	14,810/76/107/161. Drilling. Down 4-1/2 hrs for elec repairs. With 12.9 ppg mud in hole, down 8 min. Pmpd 8 min and made 15-min connection - had 26% incr in flow w/3 bbl incr in pits. Gas fluctuated from 150-285 units for 45 min w/mud cutting from 12.9 ppg to 10.0 ppg w/sli flow. Mudded up to 13.3 ppg w/connection gas at 44 units. Background gas: 3 units. JAN 23 1975 Mud: (.691) 13.3+ x 56 x 3.9 (4% oil)
Shell-Ute Tribal 1-33Z2 (D) Parker #118 16,200' Wasatch Test KB 6057', GL 6029' 7" csg @ 12,358'	14,867/76/108/57. Drilling. Lost circ at 14,848. Logged drlg break, regained returns, and lost circ again at 14,856, logging another drlg break. Sptd another pill and regained circ. Lost total of 400-450 bbls mud. Fm gas: 105 units. JAN 24 1975 Mud: (.691) 13.3 x 56 x 4.3 (6.2#/bbl LCM) (4% oil)
Shell-Ute Tribal 1-33Z2 (D) Parker #118 16,200' Wasatch Test KB 6057', GL 6029' 7" csg @ 12,358'	1/25: 14,968/76/109/101. Drilling. Logged show of 380 units gas w/mud cutting from 13.3 to 10.4 ppg. Circ 2 hrs w/250-340 units gas. Weighted mud to 13.4 ppg w/gas coming back to 250-300 units and decr to 40-100 units w/13.5 ppg mud. Mud: (.707) 13.6 x 53 x 4.3 (5% oil) 1/26: 15,060/76/110/92. Pumping through choke. Drld w/14.6 ppg mud, logging 2-4 min drlg break. Pump down 3 min after break. Circ 40 min and pump down 5 min. Pmpd 16 min. Checked for flow - none. Circ 1-1/2 hrs w/mud cutting fast. Put well on chk at 3 AM w/150 psi annulus press and no DP press. Presently pmpg on chk and proceeding to kill flow w/14.0 ppg mud. Mud: (.738) 14.2 x 57 x 4.3 (7% oil) 1/27: 15,063/76/111/3. Drlg w/low wt and high pump press. On chk w/14.0 ppg mud, circ out CGO. On chk w/ 14.2 ppg mud until 1 PM. Mud cutting from 14.2 to 12.0 ppg w/150-380 units gas and oil and gas in returns. Circ to cond mud to 14.4 ppg w/incr in flow. Clnd up mud w/gas presently at 15-20 units. Circ off btm w/28-30 units gas w/background of 15-20 units. JAN 27 1975 Mud: (.748) 14.4 x 53 x 4.1 (7.5#/bbl LCM) (6% oil)
Shell-Ute Tribal 1-33Z2 (D) Parker #118 16,200' Wasatch Test KB 6057', GL 6029' 7" csg @ 12,358'	15,167/76/112/104. Drilling. Background gas: 4-10 units. Connection gas: 350 units. Formation gas: 34 units. Mud: (.754) 14.5 x 62 x 3.7 (5.3#/bbl LCM) (5% oil) JAN 28 1975

Shell-Ute Tribal 1-33Z2
(D) Parker #118
16,200' Wasatch Test
KB 6057', GL 6029'
7" csg @ 12,358'

15,269/76/113/102. Drilling. Lost mud at rate of 8-12 B/H. Sptd 150 bbl pill w/25 sx med and 15 sx fine walnut hulls and circ w/very little loss. Present loss approx 4-6 B/H. Lost total of 150 bbls mud last 24 hrs. Background gas: 5-10 units. Connection gas: 145 units. Downtime gas (1 hr while sptg pill): 320 units.
Mud: (.754) 14.5 x 53 x 3.0 (8.9#/bbl LCM) (4% oil) JAN 29 19

Shell-Ute Tribal 1-33Z2
(D) Parker #118
16,200' Wasatch Test
KB 6057', GL 6029'
7" csg @ 12,358'

15,379/76/114/110. Drilling. Lost approx 150 bbls mud last 24 hrs. Bit torquing. Background gas: 25 units. Connection gas: 140 units. JAN 30 1975
Mud: (.754) 14.5 x 45 x 3.9 (13.3#/bbl LCM) (3% oil)

Shell-Ute Tribal 1-33Z2
(D) Parker #118
16,200' Wasatch Test
KB 6057', GL 6029'
7" csg @ 12,358'

15,401/76/115/22. Changing out DP. Pmpd pill and pulled out, laying down 15 jts DP (some worn and some bent). Magnafluxed DC's finding 10 cracked DC's and 1 cracked stab. Lost 100 bbls mud last 24 hrs w/hole taking 67 bbls extra on trip.
Mud: (.754) 14.5 x 46 x 2.7 (4.3#/bbl LCM) (2% oil)
JAN 31 1975

Shell-Ute Tribal 1-33Z2
(D) Parker #118
16,200' Wasatch Test
KB 6057', GL 6029'
7" csg @ 12,358'

2/1: 15,401/76/116/0. Picking up DP. Lost 100 bls mud while changing out pipe.
2/2: 15,428/76/117/11 (16' SLC). Drilling. 21 hrs working and CO tight spot. CO 14,940-15,401. Background gas: 20 units. High trip gas: 62 units.
Mud: (.754) 14.5 x 53 x 4 (9.1#/bbl LCM)
2/3: 15,553/76/118/125. Drilling. Lost 60 bbls mud. Background gas: 16 units. Formation gas: 33 units.
Mud: (.749) 14.4 x 42 x 3.1 (8#/bbl LCM)

FEB 3 1975

Shell-Ute Tribal 1-33Z2
(D) Parker #118
16,200' Wasatch Test
KB 6057', GL 6029'
7" csg @ 12,358'

15,625/76/119/72. Drilling. 20-1/4 hrs drlg. Lost approx. 160 bbls mud last 24 hrs. Background gas: 18 units. Connection gas: 350 units. Formation gas: 90 units. FEB 4 1975
Mud: (.754) 14.5+ x 46 x 2.3 (8.1#/bbl LCM) (3% oil)

Shell-Ute Tribal 1-33Z2
(D) Parker #118
16,200' Wasatch Test
KB 6057', GL 6029'
7" csg @ 12,358'

15,736/76/120/111. Drilling. Lost approx. 45 bbls mud last 24 hrs. Background gas: 65 units. Connection gas: 330 units. Formation gas: 320 units.
Mud: (.754) 14.5+ x 46 x 2.2 (9.8#/bbl LCM) (3% oil)

FEB 5 1975

Shell-Ute Tribal 1-33Z2
(D) Parker #118
16,200' Wasatch Test
KB 6057', GL 6029'
7" csg @ 12,358'

15,846/76/121/110. Drilling. Lost 130 bbls mud last 24 hrs. Background gas: 3-5 units. Connection gas: 46 units.
Mud: (.754) 14.5+ x 47 x 2.5 (2% oil) FEB 6 1975

Shell-Ute Tribal 1-33Z2
(D) Parker #118
16,200' Wasatch Test
KB 6057', GL 6029'
7" csg @ 12,358'

15,938/76/122/92. Drilling. Lost approx. 80 bbls mud. Connection gas: 330 units. Downtime gas: 340 units. Background gas: 15 units. Formation gas: 28 units.
Mud: (.754) 14.5+ x 49 x 2.4 (10.2#/bbl LCM) (2% oil)

FEB 7 1975

Shell-Ute Tribal 1-33Z2
(D) Parker #118
16,200' Wasatch Test
KB 6057', GL 6029'
7" csg @ 12,358'

2/8: 16,040/76/123/102. Drilling. Lost approx. 75 bbls mud last 24 hrs. Background gas: 60-70 units. Connection gas: 360 units.
Mud: (.759) 14.6 x 52 x 1.8 (10.4#/bbl LCM) (2% oil)
2/9: 16,148/76/124/108. Drilling. Lost 60 bbls mud last 24 hrs. Background gas: 50 units. Connection gas: 210 units.
Mud: (.759) 14.6 x 47 x 2.6 (8.2#/bbl LCM) (2% oil)
2/10: 16,200/76/125/52. Prep to log. 11-1/2 hrs drlg. 5-3/4 hrs circ & cond. Drlg break @ 16,182 - 6' w/a rise of 5 units of gas from 27-32 units. Gas on short trip w/high of 280 units for 10 mins. Lost 50 bbls last 24 hrs.
Mud: (.759) 14.6+ x 50 x 3.1 (8.9#/bbl LCM) (2% oil)

FEB 10 1975

Shell-Ute Tribal 1-33Z2
(D) Parker #118
16,200' Wasatch Test
KB 6057', GL 6029'
7" csg @ 12,358'

16,200/76/126/0. Running csg caliper. 6-1/4 hrs tripping. 16-3/4 hrs logging. Ran logs as follows: Temperature Log, DIL/FDC/CNL/BHC/Sonic.
Mud: (.759) 14.6 x 50 x 3.1 (8.9#/bbl LCM) (2% oil)

FEB 11 1975

Shell-Ute Tribal 1-33Z2
(D) Parker #118
16,200' Wasatch Test
KB 6057', GL 6029'
7" csg @ 12,358'

16,200/76/127/0. Prep to run liner. 11-1/2 hrs circ & cond'g hole. 4 hrs trip'g to pick up liner.
Mud: (.759) 14.6+ x 55 x 2.9 (7.7#/bbl LCM) (2% oil)

FEB 12 1975

Shell-Ute Tribal 1-33Z2
(D) Parker #118
16,200' Wasatch Test
KB 6057', GL 6029'
7" csg @ 12,358'

16,200/76/128/0. WOC. Cmt'd 105 jts (4,074.73') 18# JL95 SFJP 5" liner w/940 sx Class "G" w/2% gel, 30% silica flour, 1.5% D-31. Btm of shoe 16,196, liner hanger @ 12,109'. F.C. @ 16,074. Lost 40 bbls mud last 24 hrs.
Mud: (.754) 14.5+ x 45 x 2.7 (7.3#/bbl LCM) (2% oil) FEB 13 1975

Shell-Ute Tribal 1-33Z2
(D) Parker #118
16,200' Wasatch Test
KB 6057', GL 6029'
7" csg @ 12,358'

16,200/76/129/0. Running Dia-Log. 4-1/4 hrs WOC. 3-3/4 hrs going in hole. Tagged cmt top @ 11,593'. Attempted to unplug bit. Stuck. 7-1/4 hrs rigging up to run Dia-Log. First run went to 11,220' - got to 11,356'. Attempted to run free point again - tool failed. Top DC free.

FEB 14 1975

Shell-Ute Tribal 1-33Z2
(D) Parker #118
16,200' Wasatch Test
KB 6057', GL 6029'
7" csg @ 12,358'

2/15: 16,200/76/130/0. Rigging up Dia-Log. Ran free point & backed off @ 11,333'. Recovering 4 DC's. Left 8 DC's, scraper & mill. Fish plugged @ 11,353'.
Mud: (.749) 14.4 x 32 x 3.3 (7.3#/bbl LCM) (2% oil)
2/16: 16,200/76/131/0. Prep to back off fish. RU & ran Dia-Log, unable to get below 11,353. Backed off @ 11,333 leaving bit, scraper, crossover & 8 DC's in hole. Trip in hole w/Dia-Log. Screwed into fish & RU Dia-Log. Unable to go deeper. POOH.
Mud: (.749) 14.4 x 44 x 3.1 (6.9#/bbl LCM) (2% oil) FEB 18 1975

2/17: 16,200/76/132/0. Going in hole w/wash pipe. Ran collar locator & backed off fish 11,333. Ran wash pipe & washed over fish 11,333-11,431. Never took weight - no torque. POOH & picked up 5 more jts of wash pipe (252 total length of wash pipe).
Mud: (.745) 14.5 x 46 x 2.7 (6.7#/bbl LCM) (2% oil)
2/18: 16,200/76/133/0. Washing over fish.
Mud: (.749) 14.4 x 45 x 12.9 (6.5#/bbl LCM) (2% oil)
FEB 18 1975

Shell-Ute Tribal 1-33Z2
(D) Parker #118
16,200' Wasatch Test
KB 6057', GL 6029'
7" csg @ 12,358'
5" csg @ 16,196'

16,200/76/134/0. Tripping in w/back off tool. 14-1/4 hrs tripping. 7-3/4 hrs milling & washing over fish.
Mud: (.744) 14.3 x 45 x 2.5 (5.2#/bbl LCM) (2% oil)

FEB 19 1975

Shell-Ute Tribal 1-33Z2
(D) Parker #118
16,200' Wasatch Test
KB 6057', GL 6029'
7" csg @ 12,358'
5" csg @ 16,196'

16,200/76/135/0. Going in hole w/wash pipe. 3 hrs changing out tools. 3 hrs trying to back off. 17 hrs tripping. Made two trips w/reversing back off tools w/no results. Seemed to get a good bite, but kept slipping off.
Mud: (.749) 14.4 x 42 x 2.7 (5.1#/bbl LCM) (2% oil)
FEB 20 1975

Shell-Ute Tribal 1-33Z2
(D) Parker #118
16,200' Wasatch Test
KB 6057', GL 6029'
7" csg @ 12,358'
5" csg @ 16,196'

16,200/76/136/0. Milling. 15-3/4 hrs trip'g. 1-3/4 hrs trying to get over fish. 3-1/2 hrs drlg over fish. (Cutting on iron from 11,442-11,444). Ran Mill #3 (flat btm).
Mud: (.754) 14.5 x 53 x 2.1 (5.1#/bbl LCM) (2% oil) FEB 21 1975

Shell-Ute Tribal 1-33Z2
(D) Parker #118
16,200' Wasatch Test
KB 6057', GL 6029'
7" csg @ 12,358'
5" csg @ 16,196'

2/22: 16,200/76/137/0. Milling. 12-3/4 hrs milling over fish. 8-1/2 hrs trip'g. Top of fish @ 11,333. Reran Mill #3 from 11,444-11,457. Cut 13'. Ran in w/Mill #5 to cut away from csg. Milled on DC's to 11,458. Made 1' of new footage w/this mill. Mill was made w/no cutting structure on the outside, but w/a brass wear pad.
Mud: (.749) 14.4+ x 45 x 2.3 (4.9#/bbl LCM) (1% oil)
2/23: 16,200/76/138/0. Going in w/Mill #6. 17-1/2 hrs trip'g. 2 hrs changing out tools. 3 hrs trying to back off DC's, no luck. CO around DC's down to 11,458' - 5 DC's. 5' below top of 6th DC w/4 DC's to go. Ran in w/back off tool. Made a good latch, but still could not back off any DC's. Unlatched & pulled out to run Mill #6.
Mud: (.754) 14.5 x 46 x 2.5 (3.9#/bbl LCM) (1% oil)
2/24: 16,200/76/139/0. Going in w/Mill #7. 9 hrs washing over w/Mill #6. 11-3/4 hrs trip'g. Washed over to 11,463. Mill #6 cut from 11,458' to 11,463'. Cut 5'. Bronze pad was worn completely off w/no indication of cutting into csg.
Mud: (.759) 14.6+ x 54 x 2.7 (4.4#/bbl LCM) (1% oil) FEB 24 1975

Shell-Ute Tribal 1-33Z2
(D) Parker #118
16,200' Wasatch Test
KB 6057', GL 6029'
7" csg @ 12,358'
5" csg @ 16,196'

16,200/76/140/0. Going in w/down hole Kelley. 13 hrs trip'g. Could not get over fish w/Mill #8. No. 7 wash over mill would not make any hole.
Mud: (.749) 14.4 x 44 x 3.5 (3.4#/bbl LCM) (1% oil) FEB 25 1975

Shell-Ute Tribal 1-33Z2
(D) Parker #118
16,200' Wasatch Test
KB 6057', GL 6029'
7" csg @ 12,358'
5" csg @ 16,196'

16,200/76/141/0. Trying to pull lower Kelley. 3 hrs trip'g in w/tools, rigging Dia-Log & Halliburton. On 2nd run for lower Kelley tools, stuck @ 6395. Released WL & jarred tools to btm. Followed on down w/WL & retrieved. Pulled to 9795 & stuck. Released & jarred tools to btm. Pulled WL. PU oil jars, ran back & retrieved tools. Swab cup was torn. Dropped lower Kelley 8'. DC's were plugged inside to the top. CO to 11,350'.
Mud: (.754) 14.5+ x 48 x 2.7 (4.4#/bbl LCM) (1% oil) FEB 26 1975

Shell-Ute Tribal 1-33Z2
(D) Parker #118
16,200' Wasatch Test
KB 6057', GL 6029'
7" csg @ 12,358'
5" csg @ 16,196'

16,200/76/142/0. Tripping in w/down hole Kelley tools. 10 hrs trip'g DP. 8-3/4 hrs running WL to retrieve down hole Kelley. 3 hrs drlg & circ w/down hole Kelley inside DC's.
Mud: (.749) 14.4 x 43 x 3.3 (4.6#/bbl LCM) (1% oil)
FEB 27 1975

Shell-Ute Tribal 1-33Z2
(D) Parker #118
16,200' Wasatch Test
KB 6057', GL 6029'
7" csg @ 12,358'
5" csg @ 16,196'

3/22: 16,200/76/165/0. Trip'g out w/wash over Mill #24. 13-3/4 hrs trip'g. 4-1/2 hrs washing over DC's.
Mud: (.587) 11.3 x 56 x 2.7 (2.1#/bbl LCM)
3/23: 16,200/76/166/0. Trip'g out w/wash over Mill #25. 12-3/4 hrs trip'g. Trip'd in w/overshot to see if DC's would rotate - they would not. Wash over Mill #25 stuck.
Mud: (.587) 11.3 x 81 x 2.2 (1.6#/bbl LCM)
3/24: 16,200/76/167/0. Milling w/Mill #10. 14 hrs trip'g. Mill #9 junk sub was full of steel cuttings.
Mud: (.587) 11.3 x 76 x 2.0 (1.4#/bbl LCM)

MAR 2 4 1975

Shell-Ute Tribal 1-33Z2
(D) Parker #118
16,200' Wasatch Test
KB 6057', GL 6029'
7" csg @ 12,358'
5" csg @ 16,196'

16,200/76/168/0. Washing over w/Mill #27. 17-1/4 hrs trip'g. 6-1/4 hrs milling.
Mud: (.587) 11.3+ x 74 x 2.0 (1.1#/bbl LCM)

MAR 2 5 1975

Shell-Ute Tribal 1-33Z2
(D) Parker #118
16,200' Wasatch Test
KB 6057', GL 6029'
7" csg @ 12,358'
5" csg @ 16,196'

16,200/76/169/0. Washing over DC's w/Mill #28. 14-1/2 hrs washing over DC's. 8-1/2 hrs trip'g.
Mud: (.587) 11.3 x 67 x 2.3 (1.4#/bbl LCM)

MAR 2 6 1975

Shell-Ute Tribal 1-33Z2
(D) Parker #118
16,200' Wasatch Test
KB 6057', GL 6029'
7" csg @ 12,358'
5" csg @ 16,196'

16,200/76/170/0. Milling. 17-1/2 hrs trip'g. After pulling washover mill #29, no junk found in junk sub.
Mud: (.587) 11.3 x 70

MAR 2 7 1975

Shell-Ute Tribal 1-33Z2
(D) Parker #118
16,200' Wasatch Test
KB 6057', GL 6029'
7" csg @ 12,358'
5" csg @ 16,196'

3/28: 16,200/76/171/0. Trip'g out w/Mill #31. 3-1/4 hrs washing to btm. 8-1/4 hrs milling w/washover shoe. 10-3/4 hrs trip'g.
Mud: (.592) 11.4 x 74 x 2.0 (1.7#/bbl LCM)
3/29: 16,200/76/172/0. Circulating, cleaning hole. 16-1/2 hrs milling. 6-1/2 hrs trip'g.
Mud: (.587) 11.3 x 70 x 1.8 (1.9#/bbl LCM)
3/30: 16,200/76/173/0. Trip'g out w/Mill #33. 5-1/2 hrs circ out cmt & cuttings. 12-3/4 hrs trip'g.
Mud: (.592) 11.4 x 69 x 2.0 (1.6#/bbl LCM)
3/31: 16,200/76/174/0. Trip'g in w/bumper sub & jars. Ran overshot & backoff tool & worked over fish. Pulled loose. After jarring to 40,000#, trip'd out & ran back in w/die collar. Screwed onto fish & backed off w/Wilson backoff tool. Pulled 2-1/2 DC's.
Mud: (.587) 11.3 x 65 x 2.3 (1.8#/bbl LCM)

MAR 3 1 1975

Shell-Ute Tribal 1-33Z2
(D) Parker #118
16,200' Wasatch Test
KB 6057', GL 6029'
7" csg @ 12,358'
5" csg @ 16,196'

16,200/76/157/0. Prep to run mill. 11-3/4 hrs trip'g. 2-1/2 hrs reaming over fish w/Mill #23. Ran back off tool & recovered DC. Top of fish now ≈ 11,483.
Mud: (.577) 11.1 x 52 x 2.7 (1.7#/bbl LCM)

MAR 14 1975

Shell-Ute Tribal 1-33Z2
(D) Parker #118
16,200' Wasatch Test
KB 6057', GL 6029'
7" csg @ 12,358'
5" csg @ 16,196'

3/15: 16,200/76/158/0. Sptg pill in prep to pull tapered mill.
Mud: (.572) 11.0 x 50 x 2.5 (1.4#/bbl LCM)
3/16: 16,200/76/159/0. Milling w/junk Mill #1.
Mud: (.577) 11.1 x 59 x 2.0 (3.0#/bbl LCM)
3/17: 16,200/76/160/0. Work on motors. 16-1/2 hrs trip'g.

MAR 17 1975

Shell-Ute Tribal 1-33Z2
(D) Parker #118
16,200' Wasatch Test
KB 6057', GL 6029'
7" csg @ 12,358'
5" csg @ 16,196'

16,200/76/161/0. Milling.
Mud: (.577) 11.1+ x 75 x 1.6 (2.5#/bbl LCM)

MAR 18 1975

Shell-Ute Tribal 1-33Z2
(D) Parker #118
16,200' Wasatch Test
KB 6057', GL 6029'
7" csg @ 12,358'
5" csg @ 16,196'

16,200/76/162/0. Milling. Milled 11,478-11,480 in 14 hrs.
Mud: (.577) 11.1+ x 71 x 20 (3#/bbl LCM)

MAR 19 1975

Shell-Ute Tribal 1-33Z2
(D) Parker #118
16,200' Wasatch Test
KB 6057', GL 6029'
7" csg @ 12,358'
5" csg @ 16,196'

No report.

MAR 20 1975

Shell-Ute Tribal 1-33Z2
(D) Parker #118
16,200' Wasatch Test
KB 6057', GL 6029'
7" csg @ 12,358'
5" csg @ 16,196'

16,200/76/164/0. Pulling Mill #8. Milled from 11,481 to 11,482 in 12 hrs. Junk sub half full of very small pieces of junk. Mill showed grooving on face as if milling on pieces of junk.
Mud: (.530) 11.2+ x 67 x 2.2 (2.8#/bbl LCM)

MAR 21 1975

Shell-Ute Tribal 1-33Z2
(D) Parker #118
16,200' Wasatch Test
KB 6057', GL 6029'
7" csg @ 12,358'
5" csg @ 16,196'

16,200/76/143/0. Trying to drill w/down hole Kelley. 24 hrs drlg w/down hole Kelley & trip'g w/WL to retrieve tools.
Mud: (.749) 14.4+ x 44 x 3.3 (3.8#/bbl LCM) (1% oil)

FEB 28 1975

Shell-Ute Tribal 1-33Z2
(D) Parker #118
16,200' Wasatch Test
KB 6057', GL 6029'
7" csg @ 12,358'
5" csg @ 16,196'

3/1: 16,200/76/144/0. Trip in w/back off tool. Tripped out w/down hole Kelley. Made up back off tool. Tool would not hold, unable to back off. Pulled & redressed tool.
Mud: (.749) 14.4 x 42 x 3.1 (3.5#/bbl LCM) (1% oil)
3/2: 16,200/76/145/0. RIH w/Mill #10. Attempted back off without success. Trip'd for wash over shoe & Mill #9. Attempted to wash over. Milled 1'. Rotated without torque, but would not go. Mill in good shape. Pulled shoe & picked up tungston shoe.
Mud: (.718) 13.8 x 46 x 4.4 (3.8#/bbl LCM) (1% oil)
3/3: 16,200/76/146/0. GIH w/back off tool. Washed over 11,464-11,470 w/shoe #10. Cut mud wt back to 12.0. 6-3/4 hrs washing over. 14-1/2 hrs trip'g.
Mud: (.624) 12.0 x 41 x 4.8 (2.1#/bbl LCM)

MAR - 3 1975

Shell-Ute Tribal 1-33Z2
(D) Parker #118
16,200' Wasatch Test
KB 6057', GL 6029'
7" csg @ 12,358'
5" csg @ 16,196'

16,200/76/147/0. G.I.H. w/Mill #12. Backed off & recovered 4 DC's full of hard cmt. Top fish @ 11,453'. R.I.H w/Mill #11, went over fish ok. Milled 2 hrs - mill torn up - pieces left in hole. Fish = 4 DC's, bit sub, csg scraper & mill.
Mud: (.593) 11.4 x 44 x 5.5 (2.2#/bbl LCM)

MAR - 4 1975

Shell-Ute Tribal 1-33Z2
(D) Parker #118
16,200' Wasatch Test
KB 6057', GL 6029'
7" csg @ 12,358'
5" csg @ 16,196'

16,200/76/148/0. Pulling Mill #13. 4 hrs milling from 11,465-11,470 w/high torque on btm. 14-1/4 hrs trip'g.
Mud: (.556) 10.7 x 45 x 5.3 (1.4#/bbl LCM)

MAR - 5 1975

Shell-Ute Tribal 1-33Z2
(D) Parker #118
16,200' Wasatch Test
KB 6057', GL 6029'
7" csg @ 12,358'
5" csg @ 16,196'

16,200/76/149/0. G.I.H. w/washover Mill #15. 13-1/2 hrs trip'g. 4 hrs repairing blocks. Ran Mill #14 w/junk sub above wash pipe, recovered cup of junk iron.
Mud: (.561) 10.8+ x 47 x 4.3 (1.6#/bbl LCM)

MAR - 6 1975

Shell-Ute Tribal 1-33Z2
(D) Parker #118
16,200' Wasatch Test
KB 6057', GL 6029'
7" csg @ 12,358'
5" csg @ 16,196'

16,200/76/150/0. Reaming w/Mill #16. 9-1/4 hrs trip'g. Mill #15 drld on junk & had high torque 5' above btm of last mill run. Drld through junk; drld to 11,473.
Mud: (.556) 10.7 x 48 x 3.5 (1.4#/bbl LCM)

MAR - 7 1975

Shell-Ute Tribal 1-33Z2
(D) Parker #118
16,200' Wasatch Test
KB 6057', GL 6029'
7" csg @ 12,358'
5" csg @ 16,196'

3/8: 16,200/76/151/0. Pulling Mill #18. 8-1/4 hrs drlg. 5-1/2 hrs reaming bad spot.
Mud: (.567) 10.9 x 59 x 3.5 (1.5#/bbl LCM)
3/9: 16,200/76/152/0. Reaming over fish. 8-1/2 hrs trip'g. 13 hrs reaming over fish & made 3'. Drld down over bad spot @ 11,467 to 11,975' in 2-1/2 hrs w/Mill #18. Torqued up & stuck for 10-1/2 hrs w/cont'd high torque. Drld to 11,487, got stuck, pulled free & reamed back to 11,486.
Mud: (.556) 10.7 x 50 x 3.1 (1.3#/bbl LCM)
3/10: 16,200/76/153/0. Going in w/Mill #20. 7 hrs washing & reaming over fish. 16-1/2 hrs trip'g.
Mud: (.567) 10.9 x 57 x 3.5 (1.4#/bbl LCM)

MAR 1 0 1975

Shell-Ute Tribal 1-33Z2
(D) Parker #118
16,200' Wasatch Test
KB 6057', GL 6029'
7" csg @ 12,358'
5" csg @ 16.196'

16,200/76/154/0. Repairing rotary clutch. 9-1/2 hrs trip'g. 8-1/2 hrs reaming & milling on junk.
Mud: (.566) 10.9 x 54 x 3.1 (1.3#/bbl LCM)

MAR 1 1 1975

Shell-Ute Tribal 1-33Z2
(D) Parker #118
16,200' Wasatch Test
KB 6057', GL 6029'
7" csg @ 12,358'
5" csg @ 16,196'

16,200/76/155/0. Pulling Mill #21. 8 hrs washing & reaming over fish & drlg iron. 13 hrs working on rotary clutch.
Mud: (.572) 11.0 x 52 x 2.8 (1.2#/bbl LCM)

MAR 1 2 1975

Shell-Ute Tribal 1-33Z2
(D) Parker #118
16,200' Wasatch Test
KB 6057', GL 6029'
7" csg @ 12,358'
5" csg @ 16,196'

16,200/76/156/0. G.I.H. w/back off tool. 18-1/2 hrs trip'g.
Mud: (.572) 11.0 x 64 x 2.7 (1.9#/bbl LCM)

MAR 1 3 1975

Shell-Ute Tribal 1-33Z2
(D) Parker #118
16,200' Wasatch Test
KB 6057', GL 6029'
7" csg @ 12,358'
5" csg @ 16,196'

16,200/76/175/0. Tripping in hole. Screwed into fish. Pulled up 25,000# over wt of fishing string. Press up to 3500#. Had bit sub screwed back onto fish & jarred five times @ 225,000 wt, 50,000# over fishing string wt. Pulled loose. Recovered 3' long bit sub. Left csg scraper & mill in hole. Ran in w/bit sub w/1/2" hole bored in side. Could not get fish. Pulled string.
Mud: (.582) 11.2 x 58 x 1.8 (1.4#/bbl LCM)

APR 01 1975

Shell-Ute Tribal 1-33Z2
(D) Parker #118
16,200' Wasatch Test
KB 6057', GL 6029'
7" csg @ 12,358'
5" csg @ 16,196'

16,200/76/176/0. Trip'g to change shoe. Tripped in w/wash-over shoe. Milled over csg scraper & 1st set of scraper blades. Stopped on 2nd set of blades. Tripped out & ran in w/4-1/4" ID milling shoe to size fishing neck of csg scraper.
Mud: (.587) 11.3 x 70 x 1.6 (1.5#/bbl LCM)

APR 02 1975

Shell-Ute Tribal 1-33Z2
(D) Parker #118
16,200' Wasatch Test
KB 6057', GL 6029'
7" csg @ 12,358'
5" csg @ 16,196'

16,200/76/177/0. Prep to CO all cmt. Tripped in w/5-5/16 ID milling shoe. Milled over scraper. Tripped out & ran in w/short catch overshot. Jarred on fish for 45 mins. Pulled & recovered all of fish.
Mud: (.592) 11.4 x 67 x 1.6 (1.7#/bbl LCM)

APR 03 1975

Shell-Ute Tribal 1-33Z2
(D) Parker #118
16,200' Wasatch Test
KB 6057', GL 6029'
7" csg @ 12,358'
5" csg @ 16,196'

16,200/76/178/0. CO cmt. Cleaned out from 11,576-11,870.
Mud: (.587) 11.3 x 54 x 1.4 (1.6#/bbl LCM)

APR 04 1975

Shell-Ute Tribal 1-33Z2
(D) Parker #118
16,200' Wasatch Test
KB 6057', GL 6029'
7" csg @ 12,358'
5" csg @ 16,196'

4/5: 16,200/76/179/0. Tripping out. 16-3/4 hrs milling cmt. 3 hrs circ cmt up.
Mud: (.582) 11.2 x 56 x 1.6 (1.7#/bbl LCM)
4/6: 16,200/76/180/0. PU Bkr RTTS. 4 hrs trip'g in w/csg scraper. 2-1/2 hrs reaming w/csg scraper. 6 hrs run'g Csg Caliper. Csg cut through @ 11,507 & @ 11,515. Csg bad from 11,435 to 11,527 using Dia-Log depths.
Mud: (.566) 10.9 x 47 x 1 (1.6#/bbl LCM)
4/7: 16,200/76/181/0. Prep to run liner. 13-1/4 hrs trip'g. 5 hrs circ. Tested liner lap w/pkr set @ 12,070' to 3200 psi for 30 mins, ok. Tested csg w/3800 psi for 15 mins, ok, w/pkr set @ 8205. Tested csg w/4200 psi for 15 mins w/pkr set @ 4403, ok. Tested csg w/4500 psi for 15 mins w/pkr set @ 1997, ok.
Mud: (.592) 11.4 x 45 x 1.6 (2.6#/bbl LCM)

APR 07 1975

Shell-Ute Tribal 1-33Z2
(D) Parker #118
16,200' Wasatch Test
KB 6057', GL 6029'
7" csg @ 12,358'
5" csg @ 16,196'

16,200/76/182/0. WOC. Ran 97 jts 5" 18# N-80 Hydril csg (4006') btm set @ 12,109 & top @ 8103 and cmt'd w/321 sx Class "G" cmt w/1% D-31 & .3% HR-5. Sheared first plug @ 9 p.m. Stopped pmp'g @ 9:35 p.m. Did not bump plug. Over displaced 1.3 bbls. Btm pkr held, but liner hanger wouldn't.
Mud: (.592) 11.4 x 49 x 1.8 (1.9#/bbl LCM)

APR 08 1975

Shell-Ute Tribal 1-33Z2
(D) Parker #118
16,200' Wasatch Test
KB 6057', GL 6029'
7" csg @ 12,358'
5" csg @ 16,196'

16,200/76/183/0. Laying down DP. 9-1/2 hrs WOC. 7-1/4 hrs circ & washing & reaming to top of liner. No cmt on top of liner.
Mud: (.582) 11.2 x 50 x 1.8

APR 09 1975

Shell-Ute Tribal 1-33Z2
(D) Parker #118
16,200' Wasatch Test
KB 6057', GL 6029'
7" csg @ 12,358'
5" csg @ 16,196'

16,200/76/184/0. Drilling cmt.
Mud: (.587) 11.3 x 50 x 2.3 (1.3#/bbl LCM)

APR 10 1975

Shell-Ute Tribal 1-33Z2
(D) Parker #118
16,200' Wasatch Test
KB 6057', GL 6029'
7" csg @ 12,358'
5" csg @ 16,196'

16,200/76/185/0. CO cmt in 5" liner.
Mud: (.577) 11.1 x 56 x 3.1 (1.5#/bbl LCM)

APR 11 1975

Shell-Ute Tribal 1-33Z2
(D) Parker #118
16,200' Wasatch Test
KB 6057', GL 6029'
7" csg @ 12,358'
5" csg @ 16,196'

4/12: 16,200/76/186/0. CO cmt. 24 hrs drlg cmt.
Mud: (.587) 11.3 x 56 x 3.3 (1.4#/bbl LCM)
4/13: 16,200/76/187/0. Milling on wiper plugs. 24 hrs CO cmt to 16,062.
Mud: (.582) 11.2 x 52 x 3.5 (1.5#/bbl LCM) (1% oil)
4/14: 16,200/76/188/0. G.I.H. w/RTTS tool. 10-3/4 hrs trip.
Mud: (.587) 11.3 x 51 x 3.5 (1.5#/bbl LCM) (1% oil)

APR 14 1975

Shell-Ute Tribal 1-33Z2
(D) Parker #118
16,200' Wasatch Test
KB 6057', GL 6029'
7" csg @ 12,358'
5" csg @ 16,196'

16,200/76/189/0. Laying down DP. Ran inflow test. Pkr @ 8070'. Displaced w/wtr to 7850. Displaced mud w/wtr. Ran 250 gals BJ mud flush followed by 500 BW followed by 150 gals mud flush followed by 450 BW. Press tested to 4500 psi. Sptd 800 gals 10% inhibited acetic acid on btm.
Mud: Water

APR 15 1975

Shell-Ute Tribal 1-33Z2
(D) Parker #118
16,200' Wasatch Test
KB 6057', GL 6029'
7" csg @ 12,358'
5" csg @ 16,196'

16,200/76/190/0. ND BOP's. 13-1/2 hrs LD DP. Ran 4499.75' 106 jts of used 5-1/2" 14# K-55 heat string.
Mud: Water

APR 16 1975

Shell-Ute Tribal 1-33Z2 (D) Parker #118 16,200' Wasatch Test KB 6057', GL 6029' 7" csg @ 12,358' 5" csg @ 16,196'	TD 16,200. PB 16,075. Run Bkr pkr. 11 hrs changing out BOP's. 11-1/2 hrs run'g CBL/VDL & PDC/CCL logs. Ran CBL/VDL w/4500 psi on csg. Mud: Water APR 17 1975
Shell-Ute Tribal 1-33Z2 (D) Parker #118 16,200' Wasatch Test KB 6057', GL 6029' 7" csg @ 12,358' 5" csg @ 16,196'	TD 16,200. PB 16,075. RU to displace wtr. Set Bkr Model "FA" (32FA30 pkr w/MDE 2 jt 2-7/8" tbg, Otis nipple & Bkr Model "C" expendable plug holder) @ 13,730' w/tail @ 13,772'. 20-3/4 hrs RU & run'g 443 jts 2-7/8 N-80, 6.32#, 8rd tbg w/Bkr anchor seal assembly. Mud: Water APR 18 1975
Shell-Ute Tribal 1-33Z2 (D) 16,200' Wasatch Test KB 6057', GL 6029' 7" csg @ 12,358' 5" csg @ 16,196'	TD 16,200. PB 16,075. MORT. Displaced wtr w/inhibited wtr as per Oil Letter #1. Pmpd 2% NaCl down tbg. Landed tbg & installed back press valve. Tested tbg to 7500 psi for 1 hr, 300 psi loss. Installed 10,000 psi frac tree & tested to 10,500 psi, ok. Pmpd 2 bbls diesel down each annulus (9-5/8 x 7", 7" x 5-1/2", 5-1/2" x 2-7/8"). Released rig 5 p.m. 4/18/75. (RDUFA) APR 21 1975
Shell-Ute Tribal 1-33Z2 (D) 16,200' Wasatch Test KB 6057', GL 6029' 7" csg @ 12,358' 5" csg @ 16,196'	TD 16,200. PB 16,075 (RRD 4/21/75) Prep to knock out tbg plug. MIRU Hot Oil Service & press tbg to 4000 psi. MAY 7 1975
Shell-Ute Tribal 1-33Z2 (D) 16,200' Wasatch Test KB 6057', GL 6029' 7" csg @ 12,358' 5" csg @ 16,196'	TD 16,200. PB 16,095. Prep to stimulate. MI&RU Sun Oilfield Service. Knocked out tbg plug & chased to TD. POOH. MI&RU OWP. Ran Temp log from tbg tail @ 13,700 to PBTD @ 16,095. Ran in to perf 1 hole @ each of the following depths using 2" steel carrier gun decentralized top, middle & btm w/magnets. Used Harrison RT charges. Run #1 press before perf'g 80 psi. Perf'd 1 hole @ each of following: 16,054, 16,051, 16,043, 16,037, 16,031, 16,027, 16,020, 16,016, 16,000, 15,992, 15,986, 15,976, 15,973, 15,958, 15,953, 15,945, 15,939, 15,934, 15,927, 15,922, 15,916, 15,912, 15,908, 15,892, 15,888, 15,879, 15,871, 15,867, 15,863, 15,850, 15,847, 15,843, 15,839, 15,831, 15,823, 15,806, 15,801, 15,788, 15,781, 15,770. Total of 40 holes. Press after perf'g 40 psi. Run #2 press before perf'g 120 psi. Perf'd 1 hole @ each of following: 15,763, 15,754, 15,749, 15,744, 15,740, 15,726, 15,719, 15,707, 15,701, 15,682, 15,670, 15,664, 15,656, 15,637, 15,634, 15,629, 15,623, 15,619, 15,609, 15,605, 15,588, 15,582, 15,572, 15,566, 15,558, 15,554, 15,545, 15,536, 15,520, 15,516, 15,506, 15,501. Total 32 holes. Press after perf'g 160 psi. Depths refer to CNL/FDC/GR dated 12/27/74. POOH. RD&MO OWP. MAY 8 1975

Shell-Ute Tribal 1-33Z2
(D)
16,200' Wasatch Test
KB 6057', GL 6029'
7" csg @ 12,358'
5" csg @ 16,196'

TD 16,200. PB 16,095. Prep to flow for cleanup. 14-hr SITP 4500. MI&RU BJ Service & AT gross perf'd interval 15,501-16,054 (72 holes) w/300 bbls 15% HCl acid as follows: Pmp'd 4 bbls acid & dropped 2 7/8" RCN ball sealers w/1.4 spec grav. Repeated 71 times. Pmp'd 12 bbls acid w/o Unibeads. Flushed w/122 bbls fresh wtr containing 3 gals G10 & 1140# NaCl/1000 gals fresh wtr. All acid except last 12 bbls contained 3 gals G10, 3 gals C15, 3 gals J22, 40# OS-160 Wide Range Unibeads, 40# OS-160 Button Unibeads & 3# 20-40 mesh RA sd/1000 gals acid. Max press 10,000 psi, avg 9200, min 7400. Max rate 7.5 B/M, avg 7, min 1.5. Reached 10,000 psi inj press 7 times before releasing ball sealers. FPP 8900, ISIP 8000 psi; 5, 10 & 15-min SIP 8000. SI overnight.

MAY 9 1975

Shell-Ute Tribal 1-33Z2
(D)
16,200' Wasatch Test
KB 6057', GL 6029'
7" csg @ 12,358'
5" csg @ 16,196'

TD 16,200. PB 16,095. Prep to run GR. 5/9 19-hr SITP 8000 psi. Opened well to pit & immediately plugged pit line chk w/Unibeads. Unibeads completely dehydrated & it took 2-3 hrs to CO treater lines w/hot oiler. Est 3-4 bbls Unibeads. Opened well to pit & flwd est 100 bbls load wtr w/some acid wtr & considerably more Unibeads in 4 hrs. FTP down to 50 psi. SI overnight. 5/10 12-hr SITP 5700. Opened well to pit & well flwd est 50 bbls load wtr in 2 hrs followed by an est 50 bbls acid wtr in 2 hrs followed by an est 50 bbls oil & gas in 2 hrs. FTP gradually to 0 & well died. SI well for 1-1/2 hrs. Circ'd heat string w/hot oiler. Opened well to pit & flwd est 15 bbls oil & 20 BW in 1 hr & FTP to 0. SI overnight. 5/11 14-hr SITP 5200.

MAY 12 1975

Shell-Ute Tribal 1-33Z2
(D)
16,200' Wasatch Test
KB 6057', GL 6029'
7" csg @ 12,358'
5" csg @ 16,196'

TD 16,200. PB 16,095. Prep to kick off well w/nitrogen. SITP 38 hrs 5600#. Opened well to pit & flwd 15 BO w/small amt wtr in 1 hr. FTP to 0. MI&RU OWP & ran GR tracer survey from PBTD 16,095 to pkr @ 13,600. POOH. 4-1/2-hr SITP while log'g 1500. Opened well to pit & flwd est 3 BO, 1 BW in 30 mins. Well died. SI overnight.

MAY 13 1975

Shell-Ute Tribal 1-33Z2
(D)
16,200' Wasatch Test
KB 6057', GL 6029'
7" csg @ 12,358'
5" csg @ 16,196'

TD 16,200. PB 16,095. Prep to kick off well w/nitrogen. SITP 4200. MI&RU Nowsco 1" coil tbg unit & nitrogen trk. Ran in hole w/tbg to 12,100' & blew hole dry. Last 1 hr nitrogen return had only trace wtr. Used total 143,000 standard cu ft nitrogen. POOH & SI overnight.

MAY 14 1975

Shell-Ute Tribal 1-33Z2
(D)
16,200' Wasatch Test
KB 6057', GL 6029'
7" csg @ 12,358'
5" csg @ 16,196'

TD 16,200. PB 16,095. SI. 15-hr SITP 800 psi. Opened well to pit. Flwd 3 BO & considerable gas in 30 mins. FTP 0. Next 1-1/2 hrs prod only small amt of gas. SI well. 2-hr SITP 0. Opened well; well dead. SI.

MAY 15 1975

Shell-Ute Tribal 1-33Z2
(D)
16,200' Wasatch Test
KB 6057', GL 6029'
7" csg @ 12,358'
5" csg @ 16,196'

TD 16,200. PB 16,095. 19-hr SITP 3900. Opened well @ 3 p.m. Flwd approx 12 BO w/some gas & no wtr in 1-1/2 hrs & died. SI @ 4:30 p.m.

MAY 16 1975

Shell-Ute Tribal 1-33Z2
(D)
16,200' Wasatch Test
KB 6057', GL 6029'
7" csg @ 12,358'
5" csg @ 16,196'

TD 16,200. PB 16,095. 5/16-5/18 SI, no operations.

MAY 19 1975

Shell-Ute Tribal 1-33Z2
(D)
16,200' Wasatch Test
KB 6057', GL 6029'
7" csg @ 12,358'
5" csg @ 16,196'

TD 16,200. PB 16,095. SI.

MAY 20 1975

Shell-Ute Tribal 1-33Z2
(D)
16,200' Wasatch Test
KB 6057', GL 6029'
7" csg @ 12,358'
5" csg @ 16,196'

TD 16,200. PB 16,095. SI.

MAY 21 1975

Shell-Ute Tribal 1-33Z2
(D)
16,200' Wasatch Test
KB 6057', GL 6029'
7" csg @ 12,358'
5" csg @ 16,196'

TD 16,200. PB 16,095. SI.

MAY 22 1975

Shell-Ute Tribal 1-33Z2
(D)
16,200' Wasatch Test
KB 6057', GL 6029'
7" csg @ 12,358'
5" csg @ 16,196'

TD 16,200. PB 16,095. SI. SITP 6000 psi. Opened well. Bled to 100# in 2 mins. Bled to 0 on 1" chk in 30 mins. Recovered est 3 BO, no wtr & some gas.

MAY 23 1975

Shell-Ute Tribal 1-33Z2 (D)
16,200' Wasatch Test
KB 6057', GL 6029'
7" csg @ 12,358'
5" csg @ 16,196'

TD 16,200. PB 16,095. Prep to perf.

MAY 27 1975

Shell-Ute Tribal 1-33Z2 (D)
16,200' Wasatch Test
KB 6057', GL 6029'
7" csg @ 12,358'
5" csg @ 16,196'

TD 16,200. PB 16,095. RU OWP & perf'd as per CNL/FDC/GR dated 2/10/75. Perf'd one hole @ each of following depths: 15,497, 15,492, 15,486, 15,479, 15,476, 15,473, 15,469, 15,463, 15,458, 15,452, 15,448, 15,436, 15,425, 15,419, 15,415, 15,410, 15,403, 15,397, 15,389, 15,382, 15,373, 15,366, 15,357, 15,349, 15,339, 15,337, 15,332, 15,325, 15,318, 15,309, 15,302, 15,294, 15,290, 15,280, 15,276, 15,274, 15,267, 15,262, 15,257, 15,252, 15,241, 15,235, 15,221, 15,214, 15,207, 15,201, 15,188, 15,179, 15,176, 15,171, 15,155, 15,143, 15,130, 15,124, 15,119, 15,100, 15,096, 15,081, 15,071, 15,067, 15,060, 15,042, 15,037, 15,031, 15,027, 15,022, 15,017, 15,009, 14,989, 14,981, 14,975, 14,944, 14,933, 14,926, 14,921, 14,918, 14,905, 14,899, 14,889, 14,884, 14,874, 14,868, 14,857, 14,839, 14,835, 14,827, 14,792, 14,787, 14,778, 14,773, 14,767, 14,751, 14,743, 14,730, 14,722, 14,715, 14,702, 14,696, 14,692, 14,686, 14,677, 14,664, 14,661, 14,658, 14,655, 14,642, 14,639, 14,635, 14,630, 14,607, 14,595, 14,589, 14,579, 14,564, 14,561, 14,558, 14,555, 14,544, 14,533, 14,528, 14,523, 14,512, 14,507. Total of 123 holes. Press built up from 390-870# during job w/no significant jumps. SI well press 1900#.

MAY 28 1975

Shell-Ute Tribal 1-33Z2 (D)
16,200' Wasatch Test
KB 6057', GL 6029'
7" csg @ 12,358'
5" csg @ 16,196'

TD 16,200. PB 16,095. Prep to AT.

MAY 29 1975

Shell-Ute Tribal 1-33Z2
(D)
16,200' Wasatch Test
KB 6057', GL 6029'
7" csg @ 12,358'
5" csg @ 16,196'

TD 16,200. PB 16,095. Prep [illegible] flow to pit. 5/29 SITP 5300. MI&RU BJ Service & AT gross perf'd interval 14,507-16,054 w/590 bbls 15% HCl acid & flushed w/122 bbls fresh wtr containing 3 gals G10 & 1590# NaCl/1000 gals wtr. All acid except last 5 bbls had no Unibeads contained 3 gals G10, 3 gals C15, 3 gals J22, 40# OS-160 Wide Range Unibeads & 3# 20-40 mesh RA sd/1000 gals acid. Pmp'd 3 bbls acid & dropped 1 7/8" RCN ball sealer. Pmp'd 3 bbls acid & dropped 2 7/8" ball sealers. Repeatedly alternated 1 ball w/3 bbls & then 2 balls w/3 bbls acid for total of 585 bbls acid & 292 ball sealers. Max press 9100 psi, min 7500, avg 8500. Max rate 8 B/M, min 3.5, avg 8. ISIP 7200 psi, 5 mins 5600, 10 mins 3850, 15 mins 3500, 20 mins 3300, 25 mins 3200, 30 mins 3200, 35 mins 3100. RD&MO BJ Service. MI&RU OWP & ran GR tracer log from PBTD to pkr. SI overnight

MAY 30 1975

Shell-Ute Tribal 1-33Z2
(D)
16,200' Wasatch Test
KB 6057', GL 6029'
7" csg @ 12,358'
5" csg @ 16,196'

TD 16,200. PB 16,095. (Correction to report of 5/30/75; Stimulation trtmt should have read: ....All acid contained 3 gals G10, 3 gals C15, 3 gals J22, 40# OS-160 Wide Range Unibeads & 3# 20-40 mesh RA sd/1000 gals acid (last 5 bbls had no Unibeads)....) 13-hr SITP 2100#. Opened well to pit & FTP down to 100 psi & well flowing flush & acid wtr on 1" chk in 1/2 hr. 1/2 hr later FTP 700 on 1" chk. Flowing almost all oil & gas. Flowing to pit. Cleaning up for 1 hr more & FTP 3000 psi on 37/64" chk. Interpretation of GR log indicated 83% of perfs showed RA. SI well to hook up to tank battery. Rec'd 10 ball sealers from chk. In 12 hrs well flwd 834 BO, 15 BW & 973 MCF/D gas rate. Avg rate last 5 hrs 74.5 BO & 1 BW/H w/906 MCF/D gas on 16/64" chk w/FTP 2200 psi. Turned well over to prod @ 6 a.m. 5/31/75.

JUN 02 1975

Shell-Ute Tribal 1-33Z2
(D)
16,200' Wasatch Test
KB 6057', GL 6029'
7" csg @ 12,358'
5" csg @ 16,196'

TD 16,200. PB 16,095. Flowing. On 24-hr test, flwd 1795 BO, 4 BW, 909 MCF gas through 16/64" chk w/2000 psi FTP.

JUN 03 1975

Shell-Ute Tribal 1-33Z2
(D)
16,200' Wasatch Test
KB 6057', GL 6029'
7" csg @ 12,358'
5" csg @ 16,196'

TD 16,200. PB 16,095. Flowing. On 24-hr test, flwd 1548 BO, 2 BW, 824 MCF gas thru 16/64" chk w/2000 psi FTP.

JUN 04 1975

Shell-Ute Tribal 1-33Z2
(D)
16,200' Wasatch Test
KB 6057', GL 6029'
7" csg @ 12,358'
5" csg @ 16,196'

TD 16,200. PB 16,095. Flowing. On 24-hr test, flwd 1592 BO, 3 BW, 841 MCF gas thru 16/64" chk w/2000 psi FTP.

JUN 05 1975

Shell-Ute Tribal 1-33Z2
(D)
16,200' Wasatch Test
KB 6057', GL 6029'
7" csg @ 12,358'
5" csg @ 16,196'

TD 16,200. PB 16,095. Flowing. On 8-hr test, flwd 409 BO, 4 BW, 269 MCF gas thru 16/64" chk w/2000 psi FTP.

JUN 06 1975

Shell-Ute Tribal 1-33Z2
(D)
16,200' Wasatch Test
KB 6057', GL 6029'
7" csg @ 12,358'
5" csg @ 16,196'

TD 16,200. PB 16,095. Flowing. On various tests, flwd:

Rept Date	Hrs	BO	BW	MCF Gas	Chk	FTP
6/7 & 6/8:	SI for BHP					
6/9:	20	941	4	771	11/64"	2200

JUN 09 1975

Shell-Ute Tribal 1-33Z2
(D)
16,200' Wasatch Test
KB 6057', GL 6029'
7" csg @ 12,358'
5" csg @ 16,196'

TD 16,200. PB 16,095. Flowing. On 24-hr test, flwd 1131 BO, 0 BW, 925 MCF gas thru 15/64" chk w/2000 psi FTP.

JUN 10 1975

Shell-Ute Tribal 1-33Z2
(D)
16,200' Wasatch Test
KB 6057', GL 6029'
7" csg @ 12,358'
5" csg @ 16,196'

TD 16,200. PB 16,095. Flowing. On 22-hr test, flwd 1047 BO, 0 BW, 786 MCF gas thru 15/64" chk w/1975 psi FTP.

JUN 11 1975

Shell-Ute Tribal 1-33Z2
(D)
16,200' Wasatch Test
KB 6057', GL 6029'
7" csg @ 12,358'
5" csg @ 16,196'

TD 16,200. PB 16,095. Flowing. On 24-hr test, flwd 1220 BO, 1 BW, 582 MCF gas thru 15/64" chk w/1900 psi FTP.

JUN 12 1975

Shell-Ute Tribal 1-33Z2
(D)
16,200' Wasatch Test
KB 6057', GL 6029'
7" csg @ 12,358'
5" csg @ 16,196'

TD 16,200. PB 16,095. Flowing. On 24-hr test, flwd 1252 BO, 1 BW, 492 MCF gas thru 15/64" chk w/1900 psi FTP.

JUN 13 1975

Shell-Ute Tribal 1-33Z2
(D)
16,200' Wasatch Test
KB 6057', GL 6029'
7" csg @ 12,358'
5" csg @ 16,196'

TD 16,200. PB 16,095. Flowing. PROD LOG'G COMPLETE. AFE #516191 provided funds for prod log'g. Cut paraffin to 7000'. RU Schl & made dummy run & recorded drag every 1000'; no excessive drag encountered. Ran FBS, Gradio & Temp logs. Recorded Gradio above perfs. Left tools 250' below tbg tail. Opened well & stabilized 10 hrs. Ran Temp, FBS & Gradio. Put well back on prod.

JUN 16 1975

Shell-Ute Tribal 1-33Z2
(D)
16,200' Wasatch Test
KB 6057', GL 6029'
7" csg @ 12,358'
5" csg @ 16,196'

TD 16,200. PB 16,095. Flowing. On 24-hr test, flwd 1076 BO, 4 BW, 528 MCF gas thru 12/64" chk w/1900 psi FTP.

JUN 17 1975

Shell-Ute Tribal 1-33Z2
(D)
16,200' Wasatch Test
KB 6057', GL 6029'
7" csg @ 12,358'
5" csg @ 16,196'

TD 16,200. PB 16,095. Flowing. On 24-hr test, flwd 1109 BO, 5 BW, 543 MCF gas thru 12/64" chk w/1900 psi FTP.

JUN 18 1975

Shell-Ute Tribal 1-33Z2
(D)
16,200' Wasatch Test
KB 6057', GL 6029'
7" csg @ 12,358'
5" csg @ 16,196'

TD 16,200. PB 16,095. Flowing. On 24-hr test, flwd 1306 BO, 6 BW, 649 MCF gas thru 12/64" chk w/1900 psi FTP.

JUN 19 1975

Shell-Ute Tribal 1-33Z2
(D)
16,200' Wasatch Test
KB 6057', GL 6029'
7" csg @ 12,358'
5" csg @ 16,196'

TD 16,200. PB 16,095. Flowing. On 24-hr test, flwd 992 BO, 3 BW, 522 MCF gas thru 12/64" chk w/1550 psi FTP.

JUN 20 1975

Shell-Ute Tribal 1-33Z2
(D)
16,200' Wasatch Test
KB 6057', GL 6029'
7" csg @ 12,358'
5" csg @ 16,196'

TD 16,200. PB 16,095. Flowing. On various tests, flwd:

Rept Date	Hrs	BO	BW	MCF Gas	Chk	FTP
6/21:	24	1069	7	536	12/64"	1850
6/22:	24	1081	6	522	12/64"	1850
6/23:	24	1117	6	476	12/64"	300

JUN 23 1975

Shell-Ute Tribal 1-33Z2
(D)
16,200' Wasatch Test
KB 6057', GL 6029'
7" csg @ 12,358'
5" csg @ 16,196'

TD 16,200. PB 16,095. Flowing. On 24-hr test, flwd 1240 BO, 7 BW, 476 MCF gas thru 12/64" chk w/300 psi FTP.

JUN 24 1975

Shell-Ute Tribal 1-33Z2
(D)
16,200' Wasatch Test
KB 6057', GL 6029'
7" csg @ 12,358'
5" csg @ 16,196'

TD 16,200. PB 16,095. Flowing. On 24-hr test, flwd 1117 BO, 6 BW, 655 MCF gas thru 12/64" chk w/400 psi FTP.

JUN 25 1975

Shell-Ute Tribal 1-33Z2
(D)
16,200' Wasatch Test
KB 6057', GL 6029'
7" csg @ 12,358'
5" csg @ 16,196'

TD 16,200. PB 16,095. Flowing. On 24-hr test, flwd 713 BO, 2 BW, 434 MCF gas thru 11/64" chk w/2000 psi FTP.

JUN 26 1975

Shell-Ute Tribal 1-33Z2
(D)
16,200' Wasatch Test
KB 6057', GL 6029'
7" csg @ 12,358'
5" csg @ 16,196'

TD 16,200. PB 16,095. Flowing. On 24-hr test, flwd 1236 BO, 5 BW, 605 MCF gas thru 13/64" chk w/1700 psi FTP.

JUN 27 1975

Shell-Ute Tribal 1-33Z2
(D)
16,200' Wasatch Test
KB 6057', GL 6029'
7" csg @ 12,358'
5" csg @ 16,196'

TD 16,200. PB 16,095. Flowing. On various tests, flwd:

Rept Date	Hrs	BO	BW	MCF Gas	Chk	FTP
6/28:	24	1173	3	578	13/64"	1700
6/29:	24	1042	4	502	11/64"	1700
6/30:	24	1112	4	565	11/64"	1800

JUN 30 1975

Shell-Ute Tribal 1-33Z2
(D)
16,200' Wasatch Test
KB 6057', GL 6029'
7" csg @ 12,358'
5" csg @ 16,196'

TD 16,200. PB 16,095. Flowing. On 24-hr test, flwd 1261 BO, 5 BW, 660 MCF gas thru 13/64" chk w/1700 psi FTP.

JUL 01 1975

Shell-Ute Tribal 1-33Z2
(D)
16,200' Wasatch Test
KB 6057', GL 6029'
7" csg @ 12,358'
5" csg @ 16,196'

TD 16,200. PB 16,095. Flowing. On 19-hr test, flwd 591 BO, 2 BW, 278 MCF gas thru 8/64" chk w/2000 psi FTP.

JUL 02 1975

Shell-Ute Tribal 1-33Z2
(D)
16,200' Wasatch Test
KB 6057', GL 6029'
7" csg @ 12,358'
5" csg @ 16,196'

TD 16,200. PB 16,095. Flowing. On 24-hr test, flwd 1182 BO, 6 BW, 278 MCF gas thru 8/64" chk w/2000 psi FTP.

JUL 03 1975

Shell-Ute Tribal 1-33Z2
(D)
16,200' Wasatch Test
KB 6057', GL 6029
7" csg @ 12,358'
5" liner @ 16,196'

TD 16,200. PB 16,095. OIL WELL COMPLETE. On 24 test flwd 1108 bbls oil, 3 BW, 539 MCF gas, GOR 486 Gravity 40.0 deg API, 11/64" choke, 1800 psi FTP from Flagstaff gross perfs 14,507-15,497 and 15,501-16,054. KB EL 6059. Completion date 5/31/75. Test date 7/3/75.
Log Tops:
TGR 3 10,195 (-4136)
Wasatch 11,452 (-5393)
Flagstaff "D" Marker 14,487 (-8428)
FINAL REPORT

JUL 07 1975

Form 9-330
(Rev. 5-63)

UNITED STATES
DEPARTMENT OF THE INTERIOR
GEOLOGICAL SURVEY

SUBMIT IN DUPLICATE (See other instructions on reverse side)

Form approved.
Budget Bureau No. 42-R355.5.

WELL COMPLETION OR RECOMPLETION REPORT AND LOG*

1a. TYPE OF WELL: OIL WELL [X] GAS WELL [ ] DRY [ ] Other

b. TYPE OF COMPLETION: NEW WELL [X] WORK OVER [ ] DEEP-EN [ ] PLUG BACK [ ] DIFF. RESVR. [ ] Other

2. NAME OF OPERATOR: Shell Oil Company

3. ADDRESS OF OPERATOR: 1700 Broadway, Denver, Colorado 80202

4. LOCATION OF WELL (*Report location clearly and in accordance with any State requirements*)*
At surface 2230' FNL and 1582' FEL Section 33
At top prod. interval reported below
At total depth

5. LEASE DESIGNATION AND SERIAL NO.: Tribal 14-20-H62-1703A
6. IF INDIAN, ALLOTTEE OR TRIBE NAME: Ute Tribal
7. UNIT AGREEMENT NAME:
8. FARM OR LEASE NAME: Ute
9. WELL NO.: 1-33Z2
10. FIELD AND POOL, OR WILDCAT: Bluebell
11. SEC., T., R., M., OR BLOCK AND SURVEY OR AREA: SW/4 NE/4 Section 33-T1N-R2W

14. PERMIT NO.: 43-013-30334 | DATE ISSUED:
12. COUNTY OR PARISH: Duchesne | 13. STATE: Utah

15. DATE SPUDDED	16. DATE T.D. REACHED	17. DATE COMPL. (*Ready to prod.*)	18. ELEVATIONS (DF, RKB, RT, GR, ETC.)*	19. ELEV. CASINGHEAD
10/8/74	2/11/75	5/31/75	6057 KB	

20. TOTAL DEPTH, MD & TVD	21. PLUG, BACK T.D., MD & TVD	22. IF MULTIPLE COMPL., HOW MANY*	23. INTERVALS DRILLED BY	ROTARY TOOLS	CABLE TOOLS
16,200	16,095	–	→	Rotary	

24. PRODUCING INTERVAL(S), OF THIS COMPLETION—TOP, BOTTOM, NAME (MD AND TVD)*
Flagstaff

25. WAS DIRECTIONAL SURVEY MADE: –

26. TYPE ELECTRIC AND OTHER LOGS RUN: DIL, CNL/FDC, BHCS-GR/Cal

27. WAS WELL CORED: –

28. CASING RECORD (*Report all strings set in well*)

CASING SIZE	WEIGHT, LB./FT.	DEPTH SET (MD)	HOLE SIZE	CEMENTING RECORD	AMOUNT PULLED
*					

29. LINER RECORD

SIZE	TOP (MD)	BOTTOM (MD)	SACKS CEMENT*	SCREEN (MD)
*				

30. TUBING RECORD

SIZE	DEPTH SET (MD)	PACKER SET (MD)

31. PERFORATION RECORD (*Interval, size and number*)
*

32. ACID, SHOT, FRACTURE, CEMENT SQUEEZE, ETC.

DEPTH INTERVAL (MD)	AMOUNT AND KIND OF MATERIAL USED

33.* PRODUCTION

DATE FIRST PRODUCTION	PRODUCTION METHOD (*Flowing, gas lift, pumping—size and type of pump*)	WELL STATUS (*Producing or shut-in*)
5/31/75	Flowing	Producing

DATE OF TEST	HOURS TESTED	CHOKE SIZE	PROD'N. FOR TEST PERIOD	OIL—BBL.	GAS—MCF.	WATER—BBL.	GAS-OIL RATIO
7/3/75	24	11/64"	→	1108	539	3	486

FLOW. TUBING PRESS.	CASING PRESSURE	CALCULATED 24-HOUR RATE	OIL—BBL.	GAS—MCF.	WATER—BBL.	OIL GRAVITY-API (CORR.)
1800		→	–	–	–	40.0

34. DISPOSITION OF GAS (*Sold, used for fuel, vented, etc.*)
To be sold

TEST WITNESSED BY:

35. LIST OF ATTACHMENTS
Well History, Casing & Cementing Details

36. I hereby certify that the foregoing and attached information is complete and correct as determined from all available records

SIGNED J. W. Brimel TITLE Div. Opers. Engr. DATE 8/14/75

*See Attachments *(See Instructions and Spaces for Additional Data on Reverse Side)

cc: Oil and Gas Conservation Commission w/attachments

Form 9-331
(May 1963)

UNITED STATES
DEPARTMENT OF THE INTERIOR
GEOLOGICAL SURVEY

SUBMIT IN TRIPLICATE*
(Other instructions on reverse side)

Form approved.
Budget Bureau No. 42-R1424.

5. LEASE DESIGNATION AND SERIAL NO.
Tribal 14-20-H62-1703A

6. IF INDIAN, ALLOTTEE OR TRIBE NAME
Ute Tribal

7. UNIT AGREEMENT NAME

8. FARM OR LEASE NAME
Ute

9. WELL NO.
1-33Z2

10. FIELD AND POOL, OR WILDCAT
Bluebell

11. SEC., T., R., M., OR BLK. AND SURVEY OR AREA
SW/4 NE/4 Section 33-T1N-R2W

12. COUNTY OR PARISH
Duchesne

13. STATE
Utah

SUNDRY NOTICES AND REPORTS ON WELLS

(Do not use this form for proposals to drill or to deepen or plug back to a different reservoir. Use "APPLICATION FOR PERMIT—" for such proposals.)

1. OIL WELL [X] GAS WELL [ ] OTHER

2. NAME OF OPERATOR
Shell Oil Company

3. ADDRESS OF OPERATOR
1700 Broadway, Denver, Colorado 80202

4. LOCATION OF WELL (Report location clearly and in accordance with any State requirements.* See also space 17 below.)
At surface
2230' FNL and 1582' FEL Section 33

14. PERMIT NO.

15. ELEVATIONS (Show whether DF, RT, GR, etc.)
6057 KB

16. Check Appropriate Box To Indicate Nature of Notice, Report, or Other Data

NOTICE OF INTENTION TO:				SUBSEQUENT REPORT OF:			
TEST WATER SHUT-OFF		PULL OR ALTER CASING		WATER SHUT-OFF		REPAIRING WELL	
FRACTURE TREAT		MULTIPLE COMPLETE		FRACTURE TREATMENT		ALTERING CASING	
SHOOT OR ACIDIZE	X	ABANDON*		SHOOTING OR ACIDIZING	X	ABANDONMENT*	
REPAIR WELL		CHANGE PLANS		(Other)			
(Other)				(NOTE: Report results of multiple completion on Well Completion or Recompletion Report and Log form.)			

17. DESCRIBE PROPOSED OR COMPLETED OPERATIONS (Clearly state all pertinent details, and give pertinent dates, including estimated date of starting any proposed work. If well is directionally drilled, give subsurface locations and measured and true vertical depths for all markers and zones pertinent to this work.) *

RECEIVED
JUL 1 1976
OIL, GAS, MINING

See attachment

APPROVED BY THE DIVISION OF OIL, GAS, AND MINING
DATE: July 1, 1976
BY: P.L. Driscoll

18. I hereby certify that the foregoing is true and correct

SIGNED J. W. Kimmel TITLE Div. Opers. Engr. DATE 6/29/76

(This space for Federal or State office use)

APPROVED BY _____ TITLE _____ DATE _____
CONDITIONS OF APPROVAL, IF ANY:

cc: O&G Conservation Commission w/attachment

*See Instructions on Reverse Side

ACID TREAT & INSTALL SUBMSBL PMP

SHELL OIL COMPANY

FROM: 5/21/76 - 6/15/76

LEASE UTE TRIBAL
DIVISION WESTERN
COUNTY DUCHESNE

WELL NO. BLUEBELL 1-33Z2
ELEV 6057 KB
STATE UTAH

UTAH
BLUEBELL

Shell-Ute Tribal 1-33Z2 (AT)

"FR" TD 16,200. PB 16,075. AFE #419057 provides funds to AT interval 14,501-16,055 (195 perfs) w/195 bbls 15% HCl. MI&RU BJ. Pmp'd 10 bbls prod wtr to est inj rate. Pmp'd 1 bbl acid & dropped 1 ball sealer. Repeated 194 times. Flushed w/110 bbls prod wtr. Acid contained 24 gals C15, 24 gals J22, 60 gals G10 & 320# WR Unibeads. Max press 9200 psi, min 5000, avg 8000. Max rate 11 B/M, min 5, avg 7. ISIP 1300 psi, 5 mins 200, 10 mins 0. RD&MO BJ. SI well. (Report discontinued until further activity)

MAY 21 1976

Shell-Ute Tribal 1-33Z2 (AT & install submsbl pmp)

TD 16,200. PB 16,075. (RRD 5/21/76) AFE #419044 provides funds to install submsbl pmp. RU CWS #8 5/22. 5/24 SIP 100#. Flushed tbg w/40 bbls diesel & 40 bbls hot prod wtr. Well on vac. Set & tested 10" 5000# BOP's. Released seal assembly from pkr. LD 70 jts 2-7/8 tbg. (Note: submsbl pmp will have to be hung @ 8000'; well had 5" scab liner @ 8103'.)

MAY 25 1976

Shell-Ute Tribal 1-33Z2 (AT & install subsmbl pmp)

TD 16,200. PB 16,075. SIP 250 psi. Bled press to 0. Pulled 110 jts 2-7/8 tbg. Set 10" BOP on 10 x 10 spool. Pulled 108 jts 5-1/2" K55 14# heat string. Set 10" x 5" tbg hanger spool & hydril. RIH w/1000' tbg for circ. PU Reda elec motor pmp assembly & hung in derrick. SD for night.

MAY 26 1976

Shell-Ute Tribal 1-33Z2 (AT & install subsmbl pmp)

TD 16,200. PB 16,075. SIP 350#; bled to 0. Pulled 1000' 2-7/8 tbg. Ran Reda elec motor pmp, 6' sub, check valve, 2 jts tbg, bleeder valve & 256 jts 2-7/8 EUE rd N80 6.5# tbg. Elec motor & pmp 68' long; tail of motor @ 8065 & liner hanger top @ 8103. Installed WH equip. Opened well to battery. SD for night.

MAY 27 1976

Shell-Ute Tribal 1-33Z2 (AT & install subsmbl pmp)

TD 16,200. PB 16,075. FL 2721'. In 18 hrs prod 970 BO. Released rig 5/27/76.

MAY 28 1976

Shell-Ute Tribal 1-33Z2 (AT & install submsbl pmp)

TD 16,200. PB 16,075. Flw'g. Past 3 days well has avg'd 1256 BO & 181 BW.

JUN 01 1976

Shell-Ute Tribal 1-33Z2 (AT & install submsbl pmp)

TD 16,200. PB 16,075. Flowing. On 24-hr test, flwd 1143 BO, 109 BW, 624 MCF gas thru 1" chk w/250 psi FTP.

JUN 02 1976

Shell-Ute Tribal 1-33Z2 TD 16,200. PB 16,075. Pmp'g. On 24-hr test, pmp'd 977
(AT & install submsbl pmp) BO, 89 BW, 541 MCF gas w/125 psi.

JUN 0 3 1976

Shell-Ute Tribal 1-33Z2 TD 16,200. PB 16,075. Pmp'g. On 21-hr test, pmp'd 481
(AT & install submsbl pmp) BO, 16 BW, 319 MCF gas w/100 psi.

JUN 0 4 1976

Shell-Ute Tribal 1-33Z2 TD 16,200. PB 16,075. (WO #419044) RU CWS #8 to pull
(AT & install submsbl pmp) tbg & pmp to replace sheared drain plug. Pmp'd 250 bbls prod wtr & killed well. Removed wellhead equip & installed hyd BOP. Pulled tbg, pmp & motor & checked for damage; no damage. SI for night. 6/5 Csg open to battery, but not flw'g. Pulled 700' tbg. Replaced sheared drain plug & ran Reda Elec motor & pmp. Landed tbg & installed wellhead equip. Hooked up csg & wellhead to flowline & started pmp; well unloading wtr. Turned well over to prod. Released rig 6/5/76.

JUN 0 7 1976

Shell-Ute Tribal 1-33Z2 TD 16,200. PB 16,075. Pmp'g. On 24-hr test, pmp'd 737
(AT & install submsbl pmp) BO, 134 BW, 369 MCF gas w/100 psi.

JUN 0 8 1976

Shell-Ute Tribal 1-33Z2 TD 16,200. PB 16,075. Pmp'g. On 24-hr test, pmp'd 717 BO,
(AT & install submsbl pmp) 107 BW, 373 MCF gas w/100 psi.

JUN 0 9 1976

Shell-Ute Tribal 1-33Z2 TD 16,200. PB 16,075. Pmp'g. On 24-hr test, pmp'd 1050
(AT & install submsbl pmp) BO, 121 BW, 556 MCF gas w/200 psi.

JUN 10 1976

Shell-Ute Tribal 1-33Z2 TD 16,200. PB 16,075. Pmp'g. On 24-hr test, pmp'd 1083 BO,
(AT & install submsbl pmp) 102 BW, 574 MCF gas w/200 psi.

JUN 1 1 1976

Shell-Ute Tribal 1-33Z2 TD 16,200. PB 16,075. Pmp'g. On various tests, pmp'd:
(AT & install submsbl pmp)

Rept Date	Hrs	BO	BW	MCF Gas	Press
6/12:	24	1083	174	574	200
6/13:	24	1072	121	600	200
6/14:	24	1077	113	543	200

JUN 14 1976

Shell-Ute Tribal 1-33Z2 TD 16,200. PB 16,075. AT & INSTALL SUBMSBL PMP COMPLETE.
(AT & install submsbl pmp) On 24-hr test 5/12 before work, prod 625 BO, 26 BW, 326 MCF gas w/75 psi. On 24-hr test dated 6/15 after work, prod 1074 BO, 110 BW, 543 MCF gas w/250 psi.
FINAL REPORT

JUN 15 1976

Form 9-331
(May 1963)

UNITED STATES
DEPARTMENT OF THE INTERIOR
GEOLOGICAL SURVEY

SUBMIT IN TRIPLICATE*
(Other instructions on reverse side)

Form approved.
Budget Bureau No. 42-R1424.

SUNDRY NOTICES AND REPORTS ON WELLS

(Do not use this form for proposals to drill or to deepen or plug back to a different reservoir. Use "APPLICATION FOR PERMIT—" for such proposals.)

RECEIVED NOV 20 1978 DIVISION OF OIL, GAS, & MINING

1. OIL WELL [X] GAS WELL [ ] OTHER

2. NAME OF OPERATOR
Shell Oil Company

3. ADDRESS OF OPERATOR
1700 Broadway, Denver, Colorado 80290

4. LOCATION OF WELL (Report location clearly and in accordance with any State requirements.* See also space 17 below.)
At surface
2230' FNL & 1582' FEL Section 33

5. LEASE DESIGNATION AND SERIAL NO.
Tribal 14-20-H62-1703A

6. IF INDIAN, ALLOTTEE OR TRIBE NAME
Ute Tribal

7. UNIT AGREEMENT NAME

8. FARM OR LEASE NAME
Ute

9. WELL NO.
1-33Z2

10. FIELD AND POOL, OR WILDCAT
Bluebell

11. SEC., T., R., M., OR BLK. AND SURVEY OR AREA
SW/4 NE/4 Section 33-T1N-R2W

12. COUNTY OR PARISH
Duchesne

13. STATE
Utah

14. PERMIT NO.

15. ELEVATIONS (Show whether DF, RT, GR, etc.)
6057 KB

16. Check Appropriate Box To Indicate Nature of Notice, Report, or Other Data

NOTICE OF INTENTION TO:

TEST WATER SHUT-OFF	[ ]	PULL OR ALTER CASING	[ ]
FRACTURE TREAT	[ ]	MULTIPLE COMPLETE	[ ]
SHOOT OR ACIDIZE	[X]	ABANDON*	[ ]
REPAIR WELL	[ ]	CHANGE PLANS	[ ]
(Other)			[ ]

SUBSEQUENT REPORT OF:

WATER SHUT-OFF	[ ]	REPAIRING WELL	[ ]
FRACTURE TREATMENT	[ ]	ALTERING CASING	[ ]
SHOOTING OR ACIDIZING	[X]	ABANDONMENT*	[ ]
(Other)			[ ]

(NOTE: Report results of multiple completion on Well Completion or Recompletion Report and Log form.)

17. DESCRIBE PROPOSED OR COMPLETED OPERATIONS (Clearly state all pertinent details, and give pertinent dates, including estimated date of starting any proposed work. If well is directionally drilled, give subsurface locations and measured and true vertical depths for all markers and zones pertinent to this work.) *

See attachment

18. I hereby certify that the foregoing is true and correct

SIGNED R. Plaroty TITLE Div. Opers. Engr. DATE 11/15/78

(This space for Federal or State office use)

APPROVED BY _____ TITLE _____ DATE _____

CONDITIONS OF APPROVAL, IF ANY:

cc: Utah O&GCC w/attach for info

*See Instructions on Reverse Side

CO, PERF, AT

SHELL OIL COMPANY

FROM: 10/3-11/3/78

LEASE	UTE TRIBAL	WELL NO.	BLUEBELL 1-33Z2
DIVISION	WESTERN	ELEV	6057 KB
COUNTY	DUCHESNE	STATE	UTAH

UTAH
BLUEBELL

Shell-Ute Tribal 1-33Z2 (CO, Perf, AT)	"FR" TD 16,075. PB 16,075. AFE provides funds to clean out, perf & acdz. Well has not been prod'g for the past week. 9/29 MI&RU slickline trk & pulled collar stop & KO bleeder valve. RD slickline trk & MI&RU WOW #19. 9/30 Pmp'd 150 BW down csg & 50 bbls down tbg. Removed flwline & WH. Installed 6" hydrill. Pulled Reda pmp & removed 6" hyd & installed 6" BOP's. PU Bkr pkr picker & started in hole. SD for night. OCT 03 1978
Shell-Ute Tribal 1-33Z2 (CO, Perf, AT) OCT 04 1978	TD 16,075. PB 16,075. 10/2 PU approx 5800' of tbg in sgls. SI well w/tbg just above pkr. SD for rig repairs.
Shell-Ute Tribal 1-33Z2 (CO, Perf, AT)	TD 16,075. PB 16,075. 10/3 Installed drlg hd & tried latch'g into pkr w/o success. Pmp'd tbg displmt w/wtr & tried latch'g into pkr w/o success. Milled 10' in 4 hrs; unable to torque tbg. Possibly Reda cable bands on top of pkr. Started out of hole. OCT 05 1978
Shell-Ute Tribal 1-33Z2 (CO, Perf, AT)	TD 16,075. PB 16,075. 10/4 Fin'd POOH; mill worn out (safety jt on picker broken). RIH w/new Bkr pkr picker. Tried latching into pkr @ 13,730 w/o success. PU power swivel. Milled 3 hrs & pkr came free; LD. Power swivel pushed pkr down hole to 14,903; tbg stacked out. PU tbg 100' & SD for night. OCT 06 1978
Shell-Ute Tribal 1-33Z2 (CO, Perf, AT)	TD 16,075. PB 16,075. 10/5 PU power swivel, brk rev circ & milled approx 4'. LD power swivel & POOH; tbg pull'g wet. Swb'd tbg down. The safety jt on the Bkr picker was broken & the mill worn out. PU tapered tap & 3-1/2 hyd jars & started in hole. OCT 09 1978
Shell-Ute Tribal 1-33Z2 (CO, Perf, AT)	TD 16,075. PB 16,075. 10/6 Fin'd RIH w/taper tap & hyd jars. Engaged pkr (fish) @ 14,927. Jar'd on fish 4 or 5 times & jars gave out. Pulled 120,000# tension on fish 5 mins; pulled out of pkr w/spear. Started out of hole. 10/7 Fin'd POOH; did not rec pkr. PU Acme mill & 2 jts WP & RIH to 14,100. RU power swivel & rev circ'd hole clean. SD for Sunday. OCT 10 1978

Shell-Ute Tribal 1-33Z2
(CO, Perf, AT)

TD 16,075. PB 16,075. 10/9 [illegible]g'd @ 14,954 & brk rev circ. Milled 28' in 4 hrs; mill worn out. Bounced tbg several times, fell free 148', then tag'd again @ 15,130. LD power swivel & started out of hole while circ'g. Rec'd some metal cut'gs & sd in returns. SD for night. OCT 11 1978

Shell-Ute Tribal 1-33Z2
(CO, Perf, AT)

TD 16,075. PB 16,075. 10/10 Fin'd POOH; mill worn out. Rec'd several pieces of metal in mill (mndrl of pkr & prt of pkr). PU 4-1/2 x 3-1/2 shoe & 65' of 4" WP & RIH. Tag'd @ 15,130. PU power swivel & brk rev circ. Started mill'g; unable to get much wt down because tbg would torque up. Milled 50' in 1 hr. Circ'd tbg clean & SD for night. OCT 12 1978

Shell-Ute Tribal 1-33Z2
(CO, Perf & AT)

TD 16,075. PB 16,075. 10/11 Brk rev circ & milled 114' in 4 hrs; unable to make any hole in last 2 hrs. Pmp'd 60 BW down tbg, then pmp'd 12 bbls 15% dbl-inh'd HCl acid down tbg. Spt'd acid in liner & SD 1/2 hr. Pmp'd acid into frm & started rev circ'g again. Milled 1 hr; unable to make any hole. LD power swivel; mill seems to be worn out. Started out of hole. SD for night. OCT 13 1978

Shell-Ute Tribal 1-33Z2
(CO, Perf & AT)

OCT 16 1978

TD 16,075. PB 16,075. 10/12 Fin'd POOH; mill worn out on outside of the btm indicating mill'g on scale. RIH w/new 4-1/8 x 3-1/8 mill & 2 jts 4" WP. Well flwd wtr while RIH. Tag'd @ 15,264 (30' high). PU power swivel & brk rev circ. Started mill'g & drop'd 30'. Milled 2 hrs & made 6', then fell free & went to 16,060 (hit a few tight spts on way down). Milled 1 hr; unable to make any hole. Circ'd tbg clean & SD for night.

Shell-Ute Tribal 1-33Z2
(CO, Perf & AT)

OCT 17 1978

TD 16,075. PB 16,075. 10/13 12-hr SICP 200#; bled off. POOH; no rec in mill. RU OWP; could not perf 3 btm perf'g depths @ 16,052, 16,069 & 16,084. Perf'd as per prog w/3-1/8 csg gun w/13.5 grm chrgs w/3 jets/perf'g depths. Perf'd from 16,030-15,533 (2 runs & 138 holes). 10/14 12-hr SICP 350#; bled off press & cont'd perf'g. Made 8 runs. FL 1st run 1250' & last run 400'. Had no sfc press while perf'g. Perf'd from 15,333-14,379 (8 runs & 411 holes). SI well for night & Sunday.

Shell-Ute Tribal 1-33Z2
(CO, Perf & AT)

OCT 18 1978

TD 16,075. PB 16,075. 10/16 SIP 350 psi. Pmp'd hot wtr down lubri to free perf'g gun. Pmp'd 30 BW down csg. Perf'd 14,379-13,802 (4 runs & 168 holes) for a total of 717 holes; could not perf below 16,030. Attempted to run 5" Mdl FA pkr; could not get below 200' from sfc. Pulled pkr up into lubri & pmp'd 100 bbls hot wtr down csg. Ran pkr w/expendable plug on WL & set @ 13,740. SD for night.

Shell-Ute Tribal 1-33Z2
(CO, Perf & AT)

OCT 19 1978

TD 16,075. PB 16,075. 10/17 SIP 0. TIH w/tbg & seal assy to 13,740. Attempted to sting into pkr, but could not tell if latched into pkr. Circ'd hvy paraffin out of csg w/500 bbls hot wtr. Made several attempts to latch into pkr, but could not tell if latched in, therefore, pulled tbg. Found body of 5" Mdl FA pkr w/seal assy latched on end of tbg; slips & pack-off rubber stayed in hole @ 13,740.

Shell-Ute Tribal 1-33Z2
(CO, Perf & AT)

OCT 20 1978

TD 16,075. PB 16,075. 10/18 SIP 0. TIH w/tbg & Bkr 5" Mdl C full bore pkr @ [illegible]t @ 13,732. Press'd csg to 3000 psi, ok. RU Western & AT perf's 13,802-16,030 (total of 912; 717 new & 195 old) w/50,000 gals 7-1/2% HCl as per prog. Max TP 8000 psi, min 6800, avg 7700. Max rate 10 B/M, min 7.5, avg 9. ISIP 4600 psi, 15 mins 2400. Used 720 ball sealers & 6000# BAF for diversion agent. Total load trtmt 1200, flush 125 bbls & 50 bbls diesel. Total load 1375 bbls. Held 3000 psi on backside thruout trtmt. SD for night.

Shell-Ute Tribal 1-33Z2
(CO, Perf & AT)

OCT 23 1978

TD 16,037. 10/19 SIP 0. OWP RIH to run RA log & tag'd TD @ 16,037. Log'd well from 16,037-13,800; indicated 50-60% of perfs took fluid. RD OWP. TIH w/swb equip & tag'd FL @ 800' from sfc. Ran swb to 1500 & swb'd diesel out of tbg. Made runs w/swb every 15 mins; FL stayed @ 1000'. SI after last swb run 45 mins & TP incr'd to 150#. Bled off press; sml amt of gas indicated. SI overnight.

Shell-Ute Tribal 1-33Z2
(CO, Perf & AT)

OCT 24 1978

TD 16,037. 10/20 SITP 150 psi. Pmp'd 30 bbls hot diesel down tbg & left well SI 1 hr. Flwd to pit; would not flw. Left SI another hr & well started flw'g hvy paraffin for 1/2 hr & then plug'd off. Pmp'd 30 bbls hot diesel & then 50 bbls cold diesel. SI for weekend. Prep to pull tbg & press test 2-3/8 tbg.

Shell-Ute Tribal 1-33Z2
(CO, Perf & AT)

OCT 25 1978

TD 16,037. 10/23 Well on vac. Pmp'd 15 bbls prod wtr down tbg & well stayed on a vac. Unseated full bore pkr & POOH w/13,732' 2-7/8 tbg & pkr. Removed tree & tested BOP stack. RIH w/61 jts 2-3/8 tbg w/seal nip & Bkr ball. Press tested tbg to 3000 psi 15 mins, ok. SD overnight.

Shell-Ute Tribal 1-33Z2
(CO, Perf & AT)

OCT 26 1978

TD 16,037. 10/24 SITP 0. Circ'd ball out w/50 bbls prod wtr. POOH w/2-3/8 tbg. Removed BOP stack w/only hyd left on well. PU TRW Reda pmp & motor, tied in elec cable & started in hole w/pmp & motor, 2-3/8 tbg, elec cable & 2-7/8 tbg. RIH w/total of approx 8000' & SI hyd overnight.

Shell-Ute Tribal 1-33Z2
(CO, Perf & AT)

OCT 27 1978

TD 16,037. PB 16,040. 10/25 SITP 0. Fin'd RIH w/pmp, tbg & cable. Filled tbg w/prod wtr & press tested tbg & chk valve to 500#, ok. Tied in pmp cable @ sfc after removing hyd & instal'g tree. Pmp went to 44 amps & everything chk'd ok. The equip was RIH as folls: Reda pmp btm @ 10,005 & top @ 9905, 2-3/8 EUE 10 rd xover, 4' x 2-3/8 EUE tbg sub, 10 jts 2-3/8 EUE tbg, 2-3/8 chk valve @ 9587, 1 jt 2-3/8 tbg, 2-3/8 bleeder valve @ 9556, 20 jts 2-3/8 tbg, 2-3/8 Type F collar stop @ 8928, 30 jts 2-3/8 tbg, 2-7/8 x 2-3/8 xover @ 7986, 258 jts 2-7/8 tbg to sfc. In 20 hrs prod 351 BO, 157 BW & 300 MCF gas on 64/64 chk.

Shell-Ute Tribal 1-33Z2
(CO, Perf & AT)

OCT 30 1978

TD 16,037. PB 16,040. Gauge not available.

Shell-Ute Tribal 1-33Z2
(CO, Perf & AT)

OCT 31 1978

TD 16,037. PB 16,040. On various tests, prod:

Rept Date	Hrs	BO	BW	MCF Gas	Press
10/25	Gauge not available				
10/26	20	146	68	146	150
10/27	24	240	17	171	150
10/28	24	244	1	163	150

Shell-Ute Tribal 1-33Z2
(CO, Perf & AT)

TD 16,037. PB 16,040. On 24-hr test, prod 507 BO, 0 BW & 339 MCF gas w/150 psi. NOV 1 1978

Shell-Ute Tribal 1-33Z2
(CO, Perf & AT)

NOV 3 1978

TD 16,037. Prior to work, well was prod'g 141 BO, 86 BW & 93 MCF gas on a submsbl pm Foll'g the work, well prod 488 BO, 0 BW & 339 MCF gas on submsbl pmp.
FINAL REPORT

Form OGC-1b

SUBMIT IN TRIPLICATE*
(Other instructions on reverse side)

STATE OF UTAH
DEPARTMENT OF NATURAL RESOURCES
DIVISION OF OIL, GAS, AND MINING

SUNDRY NOTICES AND REPORTS ON WELLS

(Do not use this form for proposals to drill or to deepen or plug back to a different reservoir. Use "APPLICATION FOR PERMIT—" for such proposals.)

5. LEASE DESIGNATION AND SERIAL NO.: TRIBAL 14-20-H62-4703A

6. IF INDIAN, ALLOTTEE OR TRIBE NAME: UTE TRIBAL

7. UNIT AGREEMENT NAME:

8. FARM OR LEASE NAME: UTE

9. WELL NO.: 1-33Z2

10. FIELD AND POOL, OR WILDCAT: BLUEBELL

11. SEC., T., R., M., OR BLK. AND SURVEY OR AREA: SW/4 NE/4 T1N R2W

1. OIL WELL [X] GAS WELL [ ] OTHER

2. NAME OF OPERATOR: Shell Oil Company

3. ADDRESS OF OPERATOR: P.O. Box 831 Houston, Tx 77001 ATTN: P.G. Gelling RM. # 6461

4. LOCATION OF WELL (Report location clearly and in accordance with any State requirements.* See also space 17 below.) At surface: 2230' FNL & 1582' FEL SEC. 33

14. PERMIT NO.:

15. ELEVATIONS (Show whether DF, RT, GR, etc.): 6057' KB

12. COUNTY OR PARISH: DUCHESNE

13. STATE: UTAH

16. Check Appropriate Box To Indicate Nature of Notice, Report, or Other Data

NOTICE OF INTENTION TO:				SUBSEQUENT REPORT OF:			
TEST WATER SHUT-OFF	[ ]	PULL OR ALTER CASING	[ ]	WATER SHUT-OFF	[ ]	REPAIRING WELL	[ ]
FRACTURE TREAT	[ ]	MULTIPLE COMPLETE	[ ]	FRACTURE TREATMENT	[ ]	ALTERING CASING	[ ]
SHOOT OR ACIDIZE	[X]	ABANDON*	[ ]	SHOOTING OR ACIDIZING	[X]	ABANDONMENT*	[ ]
REPAIR WELL	[ ]	CHANGE PLANS	[ ]	(Other)			[ ]
(Other)			[ ]	(NOTE: Report results of multiple completion on Well Completion or Recompletion Report and Log form.)			

17. DESCRIBE PROPOSED OR COMPLETED OPERATIONS (Clearly state all pertinent details, and give pertinent dates, including estimated date of starting any proposed work. If well is directionally drilled, give subsurface locations and measured and true vertical depths for all markers and zones pertinent to this work.)*

SEE ATTACHED

JUN 2 ...

DIVISION OF OIL, GAS & MINING

APPROVED BY THE STATE OF UTAH DIVISION OF OIL, GAS, AND MINING
DATE: 6-30-81
BY: M.J. Minder

18. I hereby certify that the foregoing is true and correct

SIGNED D.A. Lambie D.A. LAMBIE TITLE STAFF PROD. ENGINEER DATE 6-15-81

(This space for Federal or State office use)

APPROVED BY _____ TITLE _____ DATE _____

CONDITIONS OF APPROVAL, IF ANY:

*See Instructions on Reverse Side

ALTAMONT OPERATIONS
DAILY COMPLETIONS AND REMEDIALS REPORT
WELL HISTORY FOR WELL 340
ISSUED 04/16/81

WELL: UTE 1-33Z2
LABEL: FIRST REPORT
AFE: 512932
FOREMAN: KENT RUST
RIG: WOW #12
OBJECTIVE: INSTALL PUMPING UNIT
AUTH. AMNT: 150000
DAILY COST: 4300
CUM COST: 4300
DATE: 2-21 AND 2-23-81
ACTIVITY: 2-21-81 STATUS: PULL TUBING AND SUBMERSIBLE PUMP.
02 2-21-81 ACTIVITY: MIRU PULL WELLHEAD AND INSTALL
03 BOP AND HYDRIL. PULL TUBING (2 3/8 AND 2 7/8)
04 AND SUBMERSIBLE PUMP. (9973 FT.) SPOOL UP REDA
05 CABLE AND DISMANTLE SUBMERSIBLE PUMP. START
06 IN HOLE WITH 4 1/8 IN. MILL AND 1000 FT. TUBING.
07 2-23-81 STATUS: C.O. HOLE.

LABEL: -----
DAILY COST: 3500
CUM COST: 7800
DATE: 2-23 AND 2-24-81
ACTIVITY: 2-23-81 STATUS: CO HOLE.
02 2-23-81 ACTIVITY: RIH WITH 4 1/8 IN. MILL AND
03 TUBING TO 7050 FT. HAD TO PICK UP 2 7/8 IN.
04 TUBING OFF PIPE RACKS AND RUN IN HOLE TO 13650 FT.
05 HIT SOFT SCALE AT 8300 FT. - 9100 FT. - 10200 -
06 10300 FT. - 11700 FT. AND 12600 FT. NO PROBLEM WITH
07 SCALE. SDON
08 2-24-81 STATUS: FINISH IN HOLE WITH TUBING AND SPOT
09 ACID.

LABEL: -----
DAILY COST: 8500
CUM COST: 16300
DATE: 2-24-81
ACTIVITY: 2-24-81 STATUS: FINISH IN HOLE AND SPOT ACID.
02 2-24-81 ACTIVITY: SWITCH FROM 4 TO 6 LINES ON THE
03 RIG. RIH WITH TUBING AND 4 1/8 IN. MILL. HIT
04 HARD SPOT AT 13674 FT. PICKED UP POWER SWIVEL
05 AND STARTED DRILLING. HAD TO DRILL THRU 5 FT.

ALTAMONT OPERATIONS
DAILY COMPLETIONS AND REMEDIALS REPORT
WELL HISTORY FOR WELL 340
ISSUED 04/16/81

06 BEFORE FELL THRU. LAID DOWN POWER SWIVEL.
07 RIH TO 14100 FT. RIG HAD BREAK DOWN. SDON

LABEL: 810226
DAILY COST: 4200
CUM COST: 20500
DATE: 2-25-81
ACTIVITY: 2-25-81 STATUS: CO HOLE
02 2-25-81 ACTIVITY: RIH WITH 10 JTS HIT HARD SCALE
03 AT 14789 TF. PICK UP POWER SWIVEL CIRCULATE HOLE
04 WITH 200 BBLS OF H20 DRILL THRU SCALE (5 FT.) LAY
05 DOWN POWER SWIVEL RIH WITH 32 JTS HIT HARD SCALE
06 PICK UP POWER SWIVEL AND START DRILLING AT 15768 FT.
07 DRILLED THRU 3 FT. OF SCALE AND STILL DRILLNIG
08 SDON
09 2-26-81 STATUS: CO

LABEL: 810227
DAILY COST: 3500
CUM COST: 24000
DATE: 2-26-81
ACTIVITY: 2-26-81 STATUS: CO HOLE
02 2-26-81 ACTIVITY: RECOUNT PIPE AND REVISE DEPTH AT
03 WHICH DRILLING @ 15672 FT. PUMP 200 BBL OF H20 TO GET
04 CIRCULATION START DRILLING ON SCALE SCALE VERY HARD MADE
05 ABOUT 4 FT. IN HOLE LAY DOWN POWER SWIVEL AND HOOK
06 TO PUMP PUMPED ACID DOWN HOLE ATTEMPT TO SPOT 10 BBLS @
07 15672 FT. TBG PRESSURED UP WHEN PUMPED DOWN HOLE REVERSE
08 CIRCULATION AND PUMP OUT TBG ATTEMPT TO PUMP DOWN TBG AGAIN
09 TBG PRESSURED UP AGAIN REVERSE CIRCULATION AND CLEAN OUT
10 ACID SDON
11 2-27-81 STATUS: PULL TBG

LABEL: -----
DAILY COST: 2900
CUM COST: 29650
DATE: 2-27 AND 2-28 AND 3-2-81
ACTIVITY: 2-27-81 STATUS: PULL TUBING.
02 2-27-81 ACTIVITY: POOH WITH TUBING (15670 FT.)
03 AND 4 1/8 IN. MILL. TUBING AND MILL WERE PLUGGED
04 WITH SCALE. CHANGED OUT 4 1/8 IN. MILL. START
05 IN HOLE WITH TUBING AND 4 1/8 IN. MILL. (7000 FT.)

ALTAMONT OPERATIONS
DAILY COMPLETIONS AND REMEDIALS REPORT
WELL HISTORY FOR WELL 340
ISSUED 04/16/81

06 SDON.
07 2-28-81 STATUS: FINISH RUNNING TUBING AND CO HOLE.
08 2-28-81 ACTIVITY: FINISH RUNNING TUBING AND 4 1/8 IN.
09 MILL. HIT SCALE AT 15672 FT. CIRCULATE HOLE
10 WITH 250 BBL. OF WATER. START DRILLING ON
11 SCALE (VERY HARD). BROKE THRU SCALE AND RUN
12 TUBING AND MILL DOWN TO 15988 FT. HIT SCALE AGAIN
13 AND DECIDED NOT TO MILL TO TD. SDON
14 3-2-81 STATUS: SPOT ACID.

LABEL: =====
DAILY COST: 3000
CUM COST: 32650
DATE: 3-2 AND 3-3-81
ACTIVITY: 3-2-81 STATUS: SPOT ACID
02 3-2-81 ACTIVITY: PUMPED 250 BBL OF WATER TO GET
03 CIRCULATION. PUMPED 4000 GAL. OF 15 PERCENT
04 HCL DOWN HOLE FOLLOWED BY 80 BBL OF WATER. PULLED
05 TUBING UP TO 11000 FT. PUMPED 200 BBL OF WATER
06 TO WASH AWAY ACID. STARTED OUT OF HOLE WITH
07 TUBING. LAID DOWN 190 JOINTS OF TUBING.
08 3-3-81 STATUS: PULL TUBING AND RUN IN PRODUCTION
09 STRING.

LABEL: 810304
DAILY COST: 2800
CUM COST: 35450
DATE: 3-3-81
ACTIVITY: 3-3-81 STATUS: BLED WELL OFF FINISHED PULLING TBG
02 OUT OF HOLE PUT ON AC RUN BACK IN HOLE LANDED AC
03 @ 10034 FT. WITH 20000 LBS. TENSION SEATING NIPPLE
04 @ 10003 FT. STARTED IN HOLE WITH 11/2 IN. PUMP AND
05 RODS SDON

LABEL: 810305
DAILY COST: 3500
CUM COST: 38950
DATE: 3-4-81
ACTIVITY: 3-4-81 STATUS: BLED WELL OFF FINISHED GOING IN
02 HOLE WITH 11/2 IN. PUMP 206 3/4 IN. RODS 100
03 7/8 IN. RODS 86 1 IN. RODS SEATED PUMP @ 10003 FT.
04 PRESSURE CHECKED TBG OK HOOKED UP POLISH ROD AND

ALTAMONT OPERATIONS
DAILY COMPLETIONS AND REMEDIALS REPORT
WELL HISTORY FOR WELL 340
ISSUED 04/16/81

05	LINER HAD WELDER HOOK UP FLOW LINE AND HEAT TRACE
06	SDFN
LABEL:	-----
DAILY COST:	3700
CUM COST:	42650
DATE:	3-5-81
ACTIVITY:	3-5-81 STATUS: PUT ON HORSES HEAD - CARRIER BAR -
02	DELTA SPOOL - ROD ROTATOR - GOT PUMPING UNIT
03	READY - RELEASED RIG #12 - RIG WENT TO WESTERNS
04	YARD - SHUT DOWN FOR THE NIGHT.
LABEL:	-----
DAILY COST:	NONE
CUM COST:	42650
DATE:	3-11-81
ACTIVITY:	3-11-81 OIL-308 WATER-200 MCF-180 FTP-75
02	CHOKE-64/64 21 HOURS.
LABEL:	810313
DAILY COST:	810313
CUM COST:	42650
DATE:	3-12-81
ACTIVITY:	3-12-81 ACTIVITY: 24 HRS OIL 263-WTR 201-MCF GAS 202
02	FTP 75 CHOKE 54/64
LABEL:	-----
DAILY COST:	NONE
CUM COST:	42650
DATE:	3-13 AND 3-14 AND 3-15-81
ACTIVITY:	3-13-81 OIL-185 WATER-165 MCF-131 FTP-50
02	CHOKE-60/64 24 HOURS.
03	3-14-81 OIL-220 WATER-177 MCF-140 FTP-50
04	CHOKE-64/64 24 HOURS.
05	3-15-81 OIL-222 WATER-163 MCF-140 FTP-50
06	CHOKE-64/64 24 HOURS.
LABEL:	FINAL REPORT
DAILY COST:	FINAL REPORT
CUM COST:	42650
DATE:	3-16 AND 3-17-81
ACTIVITY:	3-16-81 OIL-232 WATER-158 MCF-140 FTP-50

ALTAMONT OPERATIONS
DAILY COMPLETIONS AND REMEDIALS REPORT
WELL HISTORY FOR WELL 340
ISSUED 04/16/81

02 CHOKE=64/64 24 HOURS.
03 3-17-81 OIL=247 WATER=146 MCF=140 FTP=50
04 CHOKE=64/64 24 HOURS.

LABEL: =====
DAILY COST: 4000
CUM COST: 4000
DATE: 4-15-81
ACTIVITY: 4-15-81 ACTIVITY: AFE 512926 PROVIDES FUNDS TO RETIRE
02 SUBMERSIBLE PUMP EQUIPMENT. MIRU. PUMP 200 BBL.
03 WATER DOWN BACKSIDE TO CLEAN REDA CABLE. PUMP 70
04 BBL. WATER DOWN TBG. TO KILL WELL. REMOVE TREE
05 AND INSTALL BOP AND HYDRIL. POOH WITH TBG. AND
06 REDA EQUIPMENT. (9310 FT.) 261 JTS. 2 7/8 32 JTS.
07 2 3/8 SDON

3

Form OGC-1b

STATE OF UTAH
DEPARTMENT OF NATURAL RESOURCES
DIVISION OF OIL, GAS, AND MINING

SUBMIT IN TRIPLICATE*
(Other instructions on reverse side)

SUNDRY NOTICES AND REPORTS ON WELLS

(Do not use this form for proposals to drill or to deepen or plug back to a different reservoir. Use "APPLICATION FOR PERMIT—" for such proposals.)

1. OIL WELL [X] GAS WELL [ ] OTHER

2. NAME OF OPERATOR: Shell Oil Company ATTN: C. A. Miller 6494 WCK.

3. ADDRESS OF OPERATOR: P. O. Box 831 Houston, Tx, 77001

4. LOCATION OF WELL (Report location clearly and in accordance with any State requirements.* See also space 17 below.) At surface: 2230' FNL & 1582' FEL Sec. 33

5. LEASE DESIGNATION AND SERIAL NO.: Tribal 14-20-H62-1703A

6. IF INDIAN, ALLOTTEE OR TRIBE NAME: Ute Tribal

7. UNIT AGREEMENT NAME:

8. FARM OR LEASE NAME: Ute

9. WELL NO.: 1-33Z2

10. FIELD AND POOL, OR WILDCAT: Bluebell

11. SEC., T., R., M., OR BLK. AND SURVEY OR AREA: SW/4 NE/4 Sec. 33 T1N R2W

14. PERMIT NO.:

15. ELEVATIONS (Show whether DF, RT, GR, etc.): KB 6057'

12. COUNTY OR PARISH: Duchesne

13. STATE: Utah

16. **Check Appropriate Box To Indicate Nature of Notice, Report, or Other Data**

NOTICE OF INTENTION TO:				SUBSEQUENT REPORT OF:			
TEST WATER SHUT-OFF		PULL OR ALTER CASING		WATER SHUT-OFF		REPAIRING WELL	
FRACTURE TREAT		MULTIPLE COMPLETE		FRACTURE TREATMENT		ALTERING CASING	
SHOOT OR ACIDIZE	X	ABANDON*		SHOOTING OR ACIDIZING		ABANDONMENT*	
REPAIR WELL		CHANGE PLANS		(Other)			
(Other)							

(NOTE: Report results of multiple completion on Well Completion or Recompletion Report and Log form.)

17. DESCRIBE PROPOSED OR COMPLETED OPERATIONS (Clearly state all pertinent details, and give pertinent dates, including estimated date of starting any proposed work. If well is directionally drilled, give subsurface locations and measured and true vertical depths for all markers and zones pertinent to this work.)*

Current Status: Currently producing 73 BOPD + 207 BWPD + 46 MCFGPD from Wasatch (13,802'-16,054').

Proposed Work: Acid treat perfs (13,802'-16,054') with 25,000 gallons 15% HCL. Perforate and acid treat new perfs (11,089'-13,753') with 40,000 gallons 7-1/2% HCL. Return well to production.

18. I hereby certify that the foregoing is true and correct

SIGNED [signature] TITLE Div. Oper. Engr. DATE 11/18/83

(This space for Federal or State office use)

APPROVED BY _____ TITLE _____ DATE _____

CONDITIONS OF APPROVAL, IF ANY:

PRD4278[redacted]423

4241 State Office Building Salt Lake City, Ut. 84114 ● 801-533-5771

MONTHLY OIL AND GAS PRODUCTION REPORT

Operator name and address: UTEX OIL CO.
% SHELL WESTERN E&P INC.

[redacted]
PO BOX 576
HOUSTON TX 77001
ATTN: P.T. KENT, OIL ACCT.

Operator name change

Duchesne N16

Utah Account No. N0840

Report Period (Month/Year) 8 / 84

Amended Report ☐

Well Name API Number	Entity	Location	Producing Zone	Days Oper	Production Volume Oil (BBL)	Gas (MSCF)	Water (BBL)
RUDY 1-11B3 4301330204	01820	02S 03W 11	WSTC	27	1821	2431	2818
SHELL UTE 1-36A3 4301330263	01821	01S 03W 36	WSTC	28	1641	6288	3218
CROOK 1-06B4 4301330213	01825	02S 04W 6	WSTC	21	1552	2251	6961
POTTER 1-02B5 4301330293	01826	02S 05W 2	WSTC	30	416	1898	1785
UTE UNIT 1-12B3 4301330205	01830	02S 03W 12	GR-WS	27	510	497	668
FIELDSTED 1-29A4 4301330276	01831	01S 04W 29	GRRV	21	325	196	7874
UTE UNIT 1-07B2 4301330206	01835	02S 02W 7	WSTC	25	1518	2500	10222
RUNT 1-21B4 4301330214	01840	02S 04W 21	WSTC	22	1903	16632	13815
BROTHERSON 1-28A4 4301330292	01841	01S 04W 28	WSTC	31	747	1412	5031
LAWRENCE 1-30B4 4301330220	01845	02S 04W 30	WSTC	31	1187	0	2910
SHELL UTE 1-08A1E 4304730173	01846	01S 01E 8	WSTC	24	1086	298	502
FLY DIMND RPR 1-14B3 4301330217	01850	02S 03W 14	WSTC	27	721	1149	2650
UTE TRBL 1-33Z2 [redacted]301330334	01851	01N 02W 33	GRRV	31	2424	1312	7229
		TOTAL			15851	36864	65683

OCT - 2

Comments (attach separate sheet if necessary)

I have reviewed this report and certify the information to be accurate and complete. Date 9-28-84

Authorized signature

Telephone

Form OGC-1b

STATE OF UTAH
DEPARTMENT OF NATURAL RESOURCES
DIVISION OF OIL, GAS, AND MINING

SUBMIT IN TRIPLICATE*
(Other instructions on reverse side)

2 7

SUNDRY NOTICES AND REPORTS ON WELLS

(Do not use this form for proposals to drill or to deepen or plug back to a different reservoir. Use "APPLICATION FOR PERMIT—" for such proposals.)

5. LEASE DESIGNATION AND SERIAL NO.: Tribal 14-20-H62-1703A

6. IF INDIAN, ALLOTTEE OR TRIBE NAME: Ute Tribal

1. OIL WELL [X] GAS WELL [ ] OTHER

7. UNIT AGREEMENT NAME:

2. NAME OF OPERATOR: Shell Oil Company ATTN: C. A. Miller 6494 WCK.

8. FARM OR LEASE NAME: Ute

3. ADDRESS OF OPERATOR: P. O. Box 831 Houston, Tx. 77001

9. WELL NO.: 1-33Z2

4. LOCATION OF WELL (Report location clearly and in accordance with any State requirements.* See also space 17 below.) At surface: 2230' FNL & 1582' FEL Sec. 33

10. FIELD AND POOL, OR WILDCAT: Bluebell

11. SEC., T., R., M., OR BLK. AND SURVEY OR AREA: SW/4 NE/4 Sec. 33 T1N R2W

RECEIVED DEC 16 1983 DIVISION OF OIL, GAS & MINING

14. PERMIT NO.:

15. ELEVATIONS (Show whether DF, RT, GR, etc.): KB 6057'

12. COUNTY OR PARISH: Duchesne

13. STATE: Utah

16. Check Appropriate Box To Indicate Nature of Notice, Report, or Other Data

NOTICE OF INTENTION TO:				SUBSEQUENT REPORT OF:			
TEST WATER SHUT-OFF	[ ]	PULL OR ALTER CASING	[ ]	WATER SHUT-OFF	[ ]	REPAIRING WELL	[ ]
FRACTURE TREAT	[ ]	MULTIPLE COMPLETE	[ ]	FRACTURE TREATMENT	[ ]	ALTERING CASING	[ ]
SHOOT OR ACIDIZE	[ ]	ABANDON*	[ ]	SHOOTING OR ACIDIZING	[X]	ABANDONMENT*	[ ]
REPAIR WELL	[ ]	CHANGE PLANS	[ ]	(Other)			[ ]
(Other)			[ ]	(NOTE: Report results of multiple completion on Well Completion or Recompletion Report and Log form.)			

17. DESCRIBE PROPOSED OR COMPLETED OPERATIONS (Clearly state all pertinent details, and give pertinent dates, including estimated date of starting any proposed work. If well is directionally drilled, give subsurface locations and measured and true vertical depths for all markers and zones pertinent to this work.)*

COMPLETED OPERATIONS
(11/17-12/10/83)

Acid treated perfs (13,802'-16,054') with 25,000 gallons 15% HCL. Perforated and acid treated new perfs (11,089'-13,753') with 40,000 gallons 7-1/2% HCL. Returned well to production.

18. I hereby certify that the foregoing is true and correct

SIGNED [signature] TITLE Div. Oper. Engr. DATE 12/12/83

(This space for Federal or State office use)

APPROVED BY _____ TITLE _____ DATE _____

CONDITIONS OF APPROVAL, IF ANY:

*See Instructions on Reverse Side

STATE:	UTAH
FIELD:	BLUEBELL
WELL:	UTE 1-33Z2
LABEL:	FIRST REPORT
WO NO.:	597777
FOREMAN:	B.J. THOMPSON
RIG:	WOW 17
AUTH. AMNT:	207000
DAILY COST:	782
CUM. COST:	2845 4750
TYPE OF JOB:	CLEAN OUT ACID TREAT PERFORATE
OBJECTIVE:	WASATCH
DATE(S):	11-17-83
PRESENT STATUS:	POOH W/ PROD EQUIP
LATEST TEST:	AVE FOR 1ST 2 WEEKS IN NOV OIL 75 WTR 209
ACTIVITY:	MIRU WOW 17 LEFT WELL PUMPING OVER NIGHT SDON

STATE:	UTAH
FIELD:	BLUEBELL
WELL:	UTE 1-33Z2
LABEL:	-----
WO NO.:	597777
FOREMAN:	B.J. THOMPSON
RIG:	WOW 17
AUTH. AMNT:	207000
DAILY COST:	2063 1905
CUM. COST:	2845 4750
TYPE OF JOB:	CLEAN OUT ACID TREAT PERFORATE
OBJECTIVE:	WASATCH
DATE(S):	11-18 AND 11-19-83
PRESENT STATUS:	RIH W/ WORK STRING
ACTIVITY:	11-18-83 SHUT DOWN PUMPING UNIT UNSEAT PUMP REMOVE
02	HORSES HEAD PUMP 200 BBLS WTR DOWN TBG W/ HOT OILER
03	POOH W/ RODS SDON
04	11-19-83 BLED WELL PUMP DOWN TBG RELEASE ANCHOR
05	CATCHER INSTALL AND TEST 6 IN ACME BOP POOH TALLY
06	TBG RIH W/ 4 1/8 IN MILL AND 4 STAR MIRACLE TOOL
07	TO 11000 FT SDON

STATE: UTAH
FIELD: BLUEBELL

WELL: UTE 1-33Z2

LABEL: -----
WO NO.: 597777
FOREMAN: B.J. THOMPSON
RIG: WOW 17
AUTH. AMNT: 207000
DAILY COST: 2552
CUM. COST: 7302
TYPE OF JOB: CLEAN OUT ACID TREAT PERFORATE
OBJECTIVE: WASATCH

DATE(S): 11-21-83
PRESENT STATUS: MILL

ACTIVITY: BLED WELL RIH W/ WORK STRING TO 13
02 THOUSAND 300 FT W/P MORE WORK STRING FROM YARD
03 P/U WORK STRING STACKED OUT 15100 FT P/U SWIVEEL
04 CONT RIH STACKED OUT AT 15100 FT R/U SWIVEL MILL
05 PULL UP HOLE SDON

STATE: UTAH
FIELD: BLUEBELL

WELL: UTE 1-33Z2

LABEL: -----
WO NO.: 597777
FOREMAN: B.J. THOMPSON
RIG: WOW 17
AUTH. AMNT: 207000
DAILY COST: 8338
CUM. COST: 15640
TYPE OF JOB: CLEAN OUT ACID TREAT PERFORATE
OBJECTIVE: WASATCH

DATE(S): 112283
PRESENT STATUS: CLOSE IN FOR NIGHT WITH TBG AT 13700 FT 6-7 P.M.

ACTIVITY: ACTIVITY 112283 - 6-7 A.M. TRAVEL TO LOCATION.
02 CHECK WELL FOR PRESS. RUN BACK TO TOP OF FILL AT
03 15100 FT AND CONTINUE MILLING ON SCALE. FELL OUT
04 OF SCALE AT 15210 FT AT 12 NOON. CONT RIH
05 TAGGED SCALE IN SEVERAL MORE PLACES. STACKED OUT
06 AT 15900 FT. CONT CLEANING OUT TO 15990 FT. START
07 OUT OF HOLE LAYING DOWN EXCESS WORKSTRING. CLOSE
08 WELL IN FOR NIGHT WITH TBG AT 13700 FT. 6-7 P.M.
09 TRAVEL HOME.

STATE: UTAH
FIELD: BLUEBELL

WELL: UTE 1-33Z2

LABEL: -----
WO NO.: 597777
FOREMAN: B.J. THOMPSON
RIG: WOW 17
AUTH. AMNT: 207000
DAILY COST: 1983
CUM. COST: 17623
TYPE OF JOB: CLEAN OUT ACID TREAT PERFORATE
OBJECTIVE: WASATCH

DATE(S): 11-23-83
PRESENT STATUS: RIH W/ TBG

ACTIVITY: BLED WELL PUMP 200 BBLS WTR DOWN TBG W/ HOT OILER
02 POOH LAY DOWN MIRACLE TOOL RIH TO 1000 FT W/ 5
03 IN MT STATES HD PKR + 45 SN SDON NO WORK 11-24-27

STATE: UTAH
FIELD: BLUEBELL

WELL: UTE 1-33Z2

LABEL: -----
WO NO.: 597777
FOREMAN: B.J. THOMPSON
RIG: WOW 17
AUTH. AMNT: 207000
DAILY COST: 2470
CUM. COST: 20093
TYPE OF JOB: CLEAN OUT ACID TREAT PERFORATE
OBJECTIVE: WASATCH

DATE(S): 11-28-83
PRESENT STATUS: ACIDIZE

ACTIVITY: BLED WELL CONT RIH SET PKR AT 13680 FT PRESS TEST
02 TBG TO 5000 LBS RIG UP DELSCO TO PULL STANDING
03 VALVE COULDNT UNSEAT PUMP HOT WTR DOWN CSG POOH W/
04 STANDING VALVE PRESS TEST CSG TO 1500 LBS LAND
05 TBG W/ 26000 LBS SET DOWN ON PKR SDON

STATE: UTAH
FIELD: BLUEBELL

WELL: UTE 1-33Z2

LABEL: -----
WO NO.: 597777
FOREMAN: B.J. THOMPSON
RIG: WOW 17
AUTH. AMNT: 207000
DAILY COST: 22255
CUM. COST: 42348
TYPE OF JOB: CLEAN OUT ACID TREAT PERFORATE
OBJECTIVE: WASATCH

DATE(S): 11-29-83
PRESENT STATUS: POOH W/ WORKSTRING

ACTIVITY: BLED WELL REMOVE BOP INSTALL AND TEST
02 10000 LB FRAC TREE R/U NOWSCO ACIDIZE AS PER PROG
03 PUMPED 592 BBLS 15 % HCL AT AVE RATE OF 8 BBLS /MIN
04 AVE PRESS 7565 LBS USED 450 BALLS AND 4000 LBS BAF
05 FLUSHED W/ 110 BBLS PROD WTR HELD 1500 LBS ON CSG
06 ISIP 4520 5 MIN 2260 10 MIN 1370 15 MIN 800 20 MIN 0
07 R/D NOWSCO REMOVE FRAC TREE INSTALL AND TEST 6 IN
08 BOP RELEASE PKR AND SOOH LAYING DOWN WORK STRING
09 SDON

STATE: UTAH
FIELD: BLUEBELL

WELL: UTE 1-33Z2

LABEL: -----
WO NO.: 597777
FOREMAN: B.J. THOMPSON
RIG: WOW 17
AUTH. AMNT: 207000
DAILY COST: 1863
CUM. COST: 44211
TYPE OF JOB: CLEAN OUT ACID TREAT PERFORATE
OBJECTIVE: WASATCH

DATE(S): 11-30-83
PRESENT STATUS: PERF

ACTIVITY: BLED WELL FIN POOH W/ MT STATES PKR R/U OWP RIH
02 AND SET 5 IN CIBP AT 13780 FT PRESS TEST TO 1500
03 LBS PRESS TEST LUBRICATOR PICK UP 1 ST PERF GUN
04 SDON

STATE: UTAH
FIELD: BLUEBELL

WELL: UTE 1-33Z2

LABEL: -----
WO NO.: 597777
FOREMAN: B.J. THOMPSON
RIG: WOW 17
AUTH. AMNT: 207000
DAILY COST: 2089
CUM. COST: 46300
TYPE OF JOB: CLEAN OUT ACID TREAT PERFORATE
OBJECTIVE: WASATCH

DATE(S): 12-01-83
PRESENT STATUS: PERF

ACTIVITY:
02 BLED WELL MADE 6 PERF RUNS 13753 FT TO 11380 FT 150 SELECTIONS 450 HOLES 21 SELECTIONS LEFT SDON

STATE: UTAH
FIELD: BLUEBELL

WELL: UTE 1-33Z2

LABEL: -----
WO NO.: 597777
FOREMAN: B.J. THOMPSON
RIG: WOW 17
AUTH. AMNT: 207000
DAILY COST: 33803 30555
CUM. COST: 80103 110658
TYPE OF JOB: CLEAN OUT ACID TREAT PERFORATE
OBJECTIVE: WASATCH

DATE(S): 12-2 AND 12-3-83
PRESENT STATUS: ACIDIZE

ACTIVITY:
02 12-2 BLED WELL RUN FINAL RUN W/ OWP (11,376'-11,089') RIH W/ 5 IN
03 HD PKR W/ + 45 SN SET PKR AT 11015 FT W/ 30000
04 LBS SET DOWN ON PKR TEST CSG TO 1500 LBS SEALS
05 LEAKING ON TBG HANGER CHNG OUT AND RETEST REMOVE
06 BOP INSTALL AND TEST 10000 LB FRAC TREE SDON
07 12-3-83 R/U NOWSCO TO ACID TREAT WELL HEAD FROZEN
08 W/O HOT OILER TREATED PERFS W/ 952 BBLS 7 1/2 %
09 HCL FLUSHED W/ 110 BBLS PROD WTR USED 452 BALLS
10 AND 10000 LBS OF BAF HELD 1500 LBS ON CSG AVE RATE
11 13.2 BPM AVE PRESS 7410 LBS R/D NOWSCO FLOW WELL TO OIL SAVER TANK FLOWED 400 BBLS GAS CUT ACID WTR SDON

STATE:	UTAH
FIELD:	BLUEBELL
WELL:	UTE 1-33Z2
LABEL:	-----
WO NO.:	597777
FOREMAN:	B.J. THOMPSON
RIG:	WOW 17
AUTH. AMNT:	207000
DAILY COST:	1905
CUM. COST:	112563
TYPE OF JOB:	CLEAN OUT ACID TREAT PERFORATE
OBJECTIVE:	WASATCH
DATE(S):	12-5-83
PRESENT STATUS:	RIH W/ MILL
ACTIVITY:	THAW WELL HEAD BLED WELL REMOVE FRAC TREE INSTALL
02	6 IN BOP RELEASE PKR POOH RIH W/ 4 1/8 IN 4-STAR
03	MILL TO MILL UP CIBP SDON

STATE:	UTAH
FIELD:	BLUEBELL
WELL:	UTE 1-33Z2
LABEL:	-----
WO NO.:	597777
FOREMAN:	B.J. THOMPSON
RIG:	WOW 17
AUTH. AMNT:	207000
DAILY COST:	2147
CUM. COST:	114710
TYPE OF JOB:	CLEAN OUT ACID TREAT PERFORATE
OBJECTIVE:	WASATCH
DATE(S):	12-6-83
PRESENT STATUS:	POOH W/ MILL
ACTIVITY:	THAW VALVES BLED WELL CONT RIH W/ 4 1/8 IN MILL
02	MILL UP CIBP POOH TO 11089 FT SDON

STATE:	UTAH
FIELD:	BLUEBELL
WELL:	UTE 1-33Z2
LABEL:	-----
WO NO.:	597777
FOREMAN:	B.J. THOMPSON
RIG:	WOW 17
AUTH. AMNT:	207000
DAILY COST:	2363
CUM. COST:	117073
TYPE OF JOB:	CLEAN OUT ACID TREAT PERFORATE
OBJECTIVE:	WASATCH
DATE(S):	12-7-83
PRESENT STATUS:	LAY DOWN WORK STRING
ACTIVITY:	BLED WELL RIH W/ WORK STRING TO PBTD
02	AT 15990 FT PUMP 200 BBLS 300 DEGREE WTR W/ HOT
03	OIL TRUCK SOOH LAYING DOWN WORK STRING SDON

STATE:	UTAH
FIELD:	BLUEBELL
WELL:	UTE 1-33Z2
LABEL:	-----
WO NO.:	597777
FOREMAN:	B.J. THOMPSON
RIG:	WOW 17
AUTH. AMNT:	207000
DAILY COST:	2008
CUM. COST:	119081
TYPE OF JOB:	CLEAN OUT ACID TREAT PERFORATE
OBJECTIVE:	WASATCH
DATE(S):	12-8-83
PRESENT STATUS:	RIH W/ RODS
ACTIVITY:	BLED WELL FIN POOH RIH W/ ANCHOR CATCHER 1 JT TBG
02	+ 45 SN AND 323 JTS TBG SET AT
03	10034 FT SDON

STATE:	UTAH
FIELD:	BLUEBELL
WELL:	UTE 1-33Z2
LABEL:	FINAL REPORT
WO NO.:	597777
FOREMAN:	B.J. THOMPSON
RIG:	WOW 17
AUTH. AMNT:	207000
DAILY COST:	1938 1066
CUM. COST:	121019 122085
TYPE OF JOB:	CLEAN OUT ACID TREAT PERFORATE
OBJECTIVE:	WASATCH
DATE(S):	12-9 AND 12-10-83
PRESENT STATUS:	MOVE

ACTIVITY:
02 12-9 BLED WELL RIH W/ RODS HAD PROBLEMS W/ 3/4 IN
03 ROD BECAUSE OF PARAFFIN SPACE OUT
04 TEST PUMP OK POLISH ROD STICKING OUT ARRANGE
05 FOR SUBS SDON
06 12-10 BLED WELL REMOVE POLISH ROD LAY DOWN 1 1 IN
07 ROD INSTALL 3 6 FT ROD SUBS
08 SPACE OUT HANG OFF RIG DOWN AND MOVE
7 DAY TEST DATA TO FOLLOW

Shell Oil Company

P.O. Box 831
Houston, Texas 77001

December 30, 1983

Mr. Norm Stout
State of Utah
Natural Resources
Division of Oil, Gas & Mining
4241 State Office Building
Salt Lake City, UT 84114

Dear Mr. Stout:

TRANSFER OF OWNERSHIP AND ASSETS
FROM SHELL OIL COMPANY TO
SHELL WESTERN E&P INC.
STATE OF UTAH

In accordance with our recent conversation, the purpose of this letter is to reduce to writing that Shell Western E&P Inc. ("SWEPI"), a subsidiary of Shell Oil Company, has been formed. Shell Western E&P Inc. is a Delaware corporation with its offices located at 200 North Dairy Ashford Road in Houston, Texas. The mailing address is P. O. Box 831, Houston, TX 77001.

Effective January 1, 1984, Shell Oil Company will transfer portions of its oil and gas operations to Shell Western E&P Inc. and Shell Western E&P Inc. will assume all of the rights, interests, obligations and duties which Shell Oil Company currently has as a result of its exploration, development and production operations in the State of Utah.

As you are aware, Shell Oil Company is currently the holder of various permits and agency authorizations. In view of the fact that Shell Western E&P Inc. will assume all of the liabilities and obligations of Shell Oil Company's exploration and production activities within the state, we respectfully request that you transfer all permits or other authorizations from Shell Oil Company to Shell Western E&P Inc., effective January 1, 1984.

To support this request, a copy of the power of attorney appointing the undersigned as Attorney-in-Fact for Shell Western E&P Inc. is enclosed. On behalf of Shell Western E&P Inc., enclosed are recently issued Bond No. Shell 1835 and Bond No. Shell 1841. The bonds were issued by the Insurance Company of North America. In the near future, I shall request that the existing Shell Oil Company bonds be released.

It is my understanding, pursuant to our prior discussion, that this letter will comply with your requirement regarding the change in the name of the permittee.

Sufficient copies of this letter are being provided to your office so that a copy can be placed in each appropriate file. A listing of active wells is enclosed. Thank you in advance for your cooperation in this matter.

Yours very truly,

G. M. Jobe

G. M. Jobe
Administrator, Regulatory-Permits
Rocky Mountain Division
Western E&P Operations

GMJ:beb

Enclosures

Form OGC-1b

STATE OF UTAH
DEPARTMENT OF NATURAL RESOURCES
DIVISION OF OIL, GAS, AND MINING

SUBMIT IN TRIPLICATE
(Other instructions on reverse side)

010919

SUNDRY NOTICES AND REPORTS ON WELLS

(Do not use this form for proposals to drill or to deepen or plug back to a different reservoir. Use "APPLICATION FOR PERMIT—" for such proposals.)

1. OIL WELL [X] GAS WELL [ ] OTHER

2. NAME OF OPERATOR
ANR Limited Inc.

3. ADDRESS OF OPERATOR
P. O. Box 749, Denver, Colorado 80201-0749

4. LOCATION OF WELL (Report location clearly and in accordance with any State requirements.* See also space 17 below.)
At surface
See attached list

RECEIVED
DEC 31 1986
DIVISION OF
OIL, GAS & MINING

5. LEASE DESIGNATION AND SERIAL NO.

6. IF INDIAN, ALLOTTEE OR TRIBE NAME

7. UNIT AGREEMENT NAME

8. FARM OR LEASE NAME

9. WELL NO.
Ute 1-3322

10. FIELD AND POOL, OR WILDCAT

11. SEC., T., R., M., OR BLK. AND SURVEY OR AREA
1N 2W Sec. 33

12. COUNTY OR PARISH: Duchesne

13. STATE

14. PERMIT NO.
43-013-30334

15. ELEVATIONS (Show whether DF, RT, GR, etc.)

16. Check Appropriate Box To Indicate Nature of Notice, Report, or Other Data

NOTICE OF INTENTION TO:				SUBSEQUENT REPORT OF:			
TEST WATER SHUT-OFF	[ ]	PULL OR ALTER CASING	[ ]	WATER SHUT-OFF	[ ]	REPAIRING WELL	[ ]
FRACTURE TREAT	[ ]	MULTIPLE COMPLETE	[ ]	FRACTURE TREATMENT	[ ]	ALTERING CASING	[ ]
SHOOT OR ACIDIZE	[ ]	ABANDON*	[ ]	SHOOTING OR ACIDIZING	[ ]	ABANDONMENT*	[ ]
REPAIR WELL	[ ]	CHANGE PLANS	[ ]	(Other)			[ ]
(Other) -Change Operator			[X]	(NOTE: Report results of multiple completion on Well Completion or Recompletion Report and Log form.)			

17. DESCRIBE PROPOSED OR COMPLETED OPERATIONS (Clearly state all pertinent details, and give pertinent dates, including estimated date of starting any proposed work. If well is directionally drilled, give subsurface locations and measured and true vertical depths for all markers and zones pertinent to this work.)*

ANR Limited has been elected successor Operator to Utex Oil Company on the oil wells described on the attached Exhibit "A".

18. I hereby certify that the foregoing is true and correct

SIGNED Jon K. Nelson TITLE Dist. Land Mgr. DATE 12/24/86

(This space for Federal or State office use)

APPROVED BY _____ TITLE _____ DATE _____

CONDITIONS OF APPROVAL, IF ANY:

*See Instructions on Reverse Side

UTAH NATURAL RESOURCES
Oil, Gas & Mining
355 West North Temple, 3 Triad Center, Suite 350, Salt Lake City, Ut 84180-1203. (801-538-5340)

MONTHLY OIL AND GAS PRODUCTION REPORT

Operator name and address:

ANR LIMITED INC./COASTAL
P O BOX 749
DENVER CO 80201 0749
ATTN: RANDY WAHL

Utah Account No. N0235

Report Period (Month/Year) 11 / 87

Amended Report ☐

Well Name API Number Entity Location	Producing Zone	Days Oper	Production Volume Oil (BBL)	Gas (MSCF)	Water (BBL)
CROOK 1-06B4 4301330213 01825 02S 04W 6	WSTC				
POTTER 1-02B5 4301330293 01826 02S 05W 2	WSTC				
UTE UNIT 1-12B3 4301330205 01830 02S 03W 12	GR-WS				
FIELDSTED 1-29A4 4301330276 01831 01S 04W 29	GR-WS				
UTE UNIT 1-07B2 4301330206 01835 02S 02W 7	WSTC				
HUNT #2-21B4 4[illegible]331114 01839 02S 04W 21	WSTC				
HUNT 1-21B4 4301330214 01840 02S 04W 21	WSTC				
BROTHERSON 1-28A4 4301330292 01841 01S 04W 28	WSTC				
LAWRENCE 1-30B4 4301330220 01845 02S 04W 30	WSTC				
SHELL UTE 1-08A1E 4304730173 01846 01S 01E 8	WSTC				
FLYING DIAMOND ROPER 1-14B3 4301330217 01850 02S 03W 14	WSTC				
UTE TRBL 1-33Z2 4301330334 01851 01N 02W 33	WSTC				
BABCOCK 1-18B3 4301330219 01855 02S 03W 18	WSTC				
		TOTAL			

Comments (attach separate sheet if necessary)

I have reviewed this report and certify the information to be accurate and complete. Date

Authorized signature

Telephone

PLEASE COMPLETE FORMS IN BLACK INK

ANR

ANR Production Company
a subsidiary of The Coastal Corporation

012712

RECEIVED
JAN 25 1988
DIVISION OF
OIL, GAS & MINING

January 19, 1988

Natural Resources
Oil, Gas & Mining
3 Triad Center, Suite 350
Salt Lake City, Utah 84180-1203

Attention: Ms. Lisha Romero

N0235

This letter includes the information you requested on January 12, 1988 concerning the recent merger of ANR Limited, Inc. into ANR Production Company. Effective December 31, 1987 (December, 1987 Production), ANR Limited, Inc. merged into ANR Production Company; and henceforth, will continue operations as ANR Production Company.

N0675

ANR Production Company will begin reporting and remitting the Utah Conservation and Occupation Taxes effective December, 1987 production for leases previously reported by ANR Limited, Inc. (Utah Account No. N-7245). ANR Production Company will use the new Utah Account No. N-0675, as assigned by the State of Utah.

Please contact me at (713) 877-6167 if I can answer any questions on this matter.

Very truly yours,

Roger W. Sparks

Roger W. Sparks
Manager, Crude Revenue Accounting

The computer shows the ANR Limited wells listed under account no. N0235.
DTS
1-26-88

CC: AWS

CTE:mmw

Lisha,
I don't see any problem w/this. I gave a copy to Arlene so she could check on the bond situation. She didn't think this would affect their bond as the bond is set up for Coastal and its subsidiaries (ANR, etc.) No Entity Number changes are necessary. DTS 1-26-88

Coastal Tower, Nine Greenway Plaza, Houston, Texas 77046-0995 • (713) 877-1400

Form 3160-5
(December 1989)

UNITED STATES
DEPARTMENT OF THE INTERIOR
BUREAU OF LAND MANAGEMENT

FORM APPROVED
Budget Bureau No. 1004-0135
Expires: September 30, 1990

SUNDRY NOTICES AND REPORTS ON WELLS

Do not use this form for proposals to drill or to deepen or reentry to a different reservoir.
Use "APPLICATION FOR PERMIT—" for such proposals

SUBMIT IN TRIPLICATE

RECEIVED
JUL 30 1990
DIVISION OF
OIL, GAS & MINING

5. Lease Designation and Serial No.: 14-20-H62-1703A

6. If Indian, Allottee or Tribe Name: Ute Indian Tribe

7. If Unit or CA, Agreement Designation: CA-9C140

1. Type of Well: [X] Oil Well [ ] Gas Well [ ] Other

8. Well Name and No.: Ute 1-33Z2

2. Name of Operator: ANR Production Company

9. API Well No.: 43-013-30334

3. Address and Telephone No.: P. O. Box 749, Denver, Colorado 80201-0749 (303) 573-4476

10. Field and Pool, or Exploratory Area: Bluebell

4. Location of Well (Footage, Sec., T., R., M., or Survey Description): 2230' FNL & 1582' FEL (SWNE)
Section 33, T1N-R2W

11. County or Parish, State: Duchesne, Utah

12. CHECK APPROPRIATE BOX(s) TO INDICATE NATURE OF NOTICE, REPORT, OR OTHER DATA

TYPE OF SUBMISSION	TYPE OF ACTION	
[X] Notice of Intent	[ ] Abandonment	[ ] Change of Plans
	[ ] Recompletion	[ ] New Construction
[ ] Subsequent Report	[ ] Plugging Back	[ ] Non-Routine Fracturing
	[ ] Casing Repair	[ ] Water Shut-Off
[ ] Final Abandonment Notice	[ ] Altering Casing	[ ] Conversion to Injection
	[ ] Other Request to Flare Gas	

(Note: Report results of multiple completion on Well Completion or Recompletion Report and Log form.)

13. Describe Proposed or Completed Operations (Clearly state all pertinent details, and give pertinent dates, including estimated date of starting any proposed work. If well is directionally drilled, give subsurface locations and measured and true vertical depths for all markers and zones pertinent to this work.)*

ANR Production Company hereby requests permission to flare gas from the above-referenced well under NTL-4A, Paragraph III, Section A, Emergencies.

ANR sells the gas produced from this well to Gary-Williams Energy Corporation. Due to the fire at the Gary-Williams plant in the Bluebell Field, the plant will be out of service for 3 to 4 weeks for repairs. Since there is no other market for the gas during this time period, ANR requests permission to flare the gas. The above-referenced well produces approximately 9 MCFPD.

14. I hereby certify that the foregoing is true and correct

Signed: Eileen Danni Dey Title: Regulatory Analyst Date: 7-26-90

(This space for Federal or State office use)

Approved by: _____ Title: _____ Date: _____
Conditions of approval, if any:

Federal approval of this action is required before commencing operations.

ACCEPTED BY THE STATE OF UTAH DIVISION OF OIL, GAS, AND MINING
DATE: 8-13-90
BY: John R. Baza

Title 18 U.S.C. Section 1001, makes it a crime for any person knowingly and willfully to make to any department or agency of the United States any false, fictitious or fraudulent statements or representations as to any matter within its jurisdiction.

*See Instruction on Reverse Side

Form 3160-5
(June 1990)

UNITED STATES
DEPARTMENT OF THE INTERIOR
BUREAU OF LAND MANAGEMENT

FORM APPROVED
Budget Bureau No. 1004-0135
Expires: March 31, 1993

SUNDRY NOTICES AND REPORTS ON WELLS

Do not use this form for proposals to drill or to deepen or reentry to a different reservoir.
Use "APPLICATION FOR PERMIT—" for such proposals.

SUBMIT IN TRIPLICATE

RECEIVED
JAN 22 1991
DIVISION OF
OIL, GAS & MINING

5. Lease Designation and Serial No.: 14-20-H62-1703A

6. If Indian, Allottee or Tribe Name: Ute Indian Tribe

7. If Unit or CA, Agreement Designation: CA-9C140

1. Type of Well: [X] Oil Well [ ] Gas Well [ ] Other

2. Name of Operator: ANR Production Company

3. Address and Telephone No.: P. O. Box 749, Denver, Colorado 80201-0749 (303) 573-4476

8. Well Name and No.: Ute Tribal 1-33Z2

9. API Well No.: 43-013-30334 POW

10. Field and Pool, or Exploratory Area: Altamont

4. Location of Well (Footage, Sec., T., R., M., or Survey Description): 2230' FNL & 1582' FEL (SWNE) Section 33, T1N-R2W

11. County or Parish, State: Duchesne County, Utah

12. CHECK APPROPRIATE BOX(s) TO INDICATE NATURE OF NOTICE, REPORT, OR OTHER DATA

TYPE OF SUBMISSION	TYPE OF ACTION	
[X] Notice of Intent	[ ] Abandonment	[ ] Change of Plans
	[ ] Recompletion	[ ] New Construction
[ ] Subsequent Report	[ ] Plugging Back	[ ] Non-Routine Fracturing
	[ ] Casing Repair	[ ] Water Shut-Off
[ ] Final Abandonment Notice	[ ] Altering Casing	[ ] Conversion to Injection
	[X] Other NTL-2B,II Application	[ ] Dispose Water (Note: Report results of multiple completion on Well Completion or Recompletion Report and Log form.)

13. Describe Proposed or Completed Operations (Clearly state all pertinent details, and give pertinent dates, including estimated date of starting any proposed work. If well is directionally drilled, give subsurface locations and measured and true vertical depths for all markers and zones pertinent to this work.)*

ANR Production Company hereby requests permission to dispose of produced water from the above-referenced well under NTL-2B, II "Disposal in the Subsurface." The produced water from the Ute Tribal 1-33Z2 flows into a steel tank equipped with a high level float switch which shuts the well in if the tank becomes overloaded. The water is hauled off by truck and then pumped into ANR's underground SWD facilities.

Accepted by the State of Utah Division of Oil, Gas and Mining
Date: 1-25-91
By: [illegible]

14. I hereby certify that the foregoing is true and correct

Signed: Colleen Danni Dey Title: Regulatory Analyst Date: 1-17-91

(This space for Federal or State office use)

Approved by: Federal Approval of this Action is Necessary Title: Date:

Conditions of approval, if any:

Title 18 U.S.C. Section 1001, makes it a crime for any person knowingly and willfully to make to any department or agency of the United States any false, fictitious or fraudulent statements or representations as to any matter within its jurisdiction.

*See Instruction on Reverse Side

Form 3160-5
(June 1990)

UNITED STATES
DEPARTMENT OF THE INTERIOR
BUREAU OF LAND MANAGEMENT

FORM APPROVED
Budget Bureau No. 1004-0135
Expires: March 31, 1993

SUNDRY NOTICES AND REPORTS ON WELLS

Do not use this form for proposals to drill or to deepen or reentry to a different reservoir. Use "APPLICATION FOR PERMIT—" for such proposals.

SUBMIT IN TRIPLICATE

RECEIVED FEB 07 1991 DIVISION OF OIL, GAS & MINING

1. Type of Well: [X] Oil Well [ ] Gas Well [ ] Other
2. Name of Operator: ANR Production Company
3. Address and Telephone No.: P. O. Box 749, Denver, Colorado 80201-0749
4. Location of Well (Footage, Sec., T., R., M., or Survey Description): See attached list
5. Lease Designation and Serial No.:
6. If Indian, Allottee or Tribe Name:
7. If Unit or CA, Agreement Designation:
8. Well Name and No.: See attached list
9. API Well No.: 43-013-
10. Field and Pool, or Exploratory Area: Altamont
11. County or Parish, State: Duchesne County, Utah

12. CHECK APPROPRIATE BOX(s) TO INDICATE NATURE OF NOTICE, REPORT, OR OTHER DATA

TYPE OF SUBMISSION	TYPE OF ACTION	
[X] Notice of Intent	[ ] Abandonment	[ ] Change of Plans
[ ] Subsequent Report	[ ] Recompletion	[ ] New Construction
[ ] Final Abandonment Notice	[ ] Plugging Back	[ ] Non-Routine Fracturing
	[ ] Casing Repair	[ ] Water Shut-Off
	[ ] Altering Casing	[ ] Conversion to Injection
	[X] Other NTL-2B Extension	[ ] Dispose Water (Note: Report results of multiple completion on Well Completion or Recompletion Report and Log form.)

13. Describe Proposed or Completed Operations (Clearly state all pertinent details, and give pertinent dates, including estimated date of starting any proposed work. If well is directionally drilled, give subsurface locations and measured and true vertical depths for all markers and zones pertinent to this work.)*

ANR Production Company, as operator of 19 BLM regulated emergency pits in the Altamont/Bluebell field, (see attached list) respectfully requests an extension for the NTL-2B application dated February 23, 1990. This application requested a variance to NTL-2B Section VI, "Temporary Use of Surface Pits."

ANR's intention was to recover waste fluid from these pits, clean up crude contaminated soils, recontour the emergency pits and then install 500 BBL steel capture vessels for emergency fluids.

ANR has removed the waste fluid from these pits, but we are currently evaluating the most effective method of pit cleanup. After this is accomplished the 500 BBL steel capture vessels will be installed. We will keep you apprised of our status on these emergency pits.

We apologize for our delay in completing this project, however the costs and complexity of proper reclamation has required more time than anticipated. Thank you for your patience and understanding on this matter.

14. I hereby certify that the foregoing is true and correct.

Signed: Eileen Danielley Title: Regulatory Analyst Date: 2-19-91

(This space for Federal or State office use)

Approved by: Federal Approval of this Action is Necessary Title: Date:

Conditions of approval, if any:

Accepted by the State of Utah Division of Oil, Gas and Mining
Date: 2/19/91
By:

Title 18 U.S.C. Section 1001, makes it a crime for any person knowingly and willfully to make to any department or agency of the United States any false, fictitious or fraudulent statements or representations as to any matter within its jurisdiction.

*See Instruction on Reverse Side

WELL NAME	WELL LOCATION	LEASE #	CA #	API #43-013	TRIBE NAME
Ute #1-35A3	Sec. 35, T1S-R3W	14-20-H62-1802	N/A	30181	Ute
Ute #1-6B2	Sec. 6, T2S-R2W	14-20-H62-1807	N/A	30349	Ute
Ute Tribal #2-33Z2	Sec. 33, T1N-R2W	14-20-H62-1703	9C140	31111	Ute
Ute Tribal #1-33Z2	Sec. 33, T1N-R2W	14-20-H62-1703A	9C140	30334 POW	Ute
Ute #1-34A4	Sec. 34, T1S-R4W	14-20-H62-1774	9640	30076	Ute
Ute #1-36A4	Sec. 36, T1S-R4W	14-20-H62-1793	9642	30069	Ute
Ute #1-20B5	Sec. 20, T2S-R5W	14-20-H62-2507	9C000143	30376	Ute
Ute #1-21C5	Sec. 21, T3S-R5W	14-20-H62-4123	UTO80I49-86C699	30448	Ute
Ute Tribal #1-28B4	Sec. 28, T2S-R4W	14-20-H62-1745	9681	30242	Ute
Monsen #1-27A3	Sec. 27, T1S-R3W	UTU-0141455	NW581	30145	N/A
Ute #2-31A2	Sec. 31, T1S-R2W	14-20-H62-1801	N/A	31139	Ute
Ute Tribal #1-31Z2	Sec. 31, T1N-R2W	14-20-H62-1801	N/A	30278	Ute
Evans #2-19B3	Sec. 19, T2S-R3W	14-20-H62-1734	9678	31113	Ute
Ute Jenks #2-1B4	Sec. 1, T2S-R4W	14-20-H62-1782	N/A	31197	Uintah & Ouray
Ute #1-1B4	Sec. 1, T2S-R4W	14-20-H62-1798	9649	30129	Ute
Murdock #2-34B5	Sec. 34, T2S-R5W	14-20-H62-2511	9685	31132	Ute
Ute #1-25B6	Sec. 25, T2S-R6W	14-20-H62-2529	N/A	30439	Ute
Ute Tribal #1-29C5	Sec. 29, T3S-R5W	14-20-H62-2393	9C200	30449	Ute
Ute #2-22B5	Sec. 22, T2S-R5W	14-20-H62-2509	N/A	31122	Ute

Form 9

STATE OF UTAH
DEPARTMENT OF NATURAL RESOURCES
DIVISION OF OIL, GAS AND MINING

6. Lease Designation and Serial Number: 14-20-H62-1703A

7. Indian Allottee or Tribe Name: Ute Indian Tribe

8. Unit or Communitization Agreement: CA-9C140

SUNDRY NOTICES AND REPORTS ON WELLS

Do not use this form for proposals to drill new wells, deepen existing wells, or to reenter plugged and abandoned wells. Use APPLICATION FOR PERMIT— for such proposals

1. Type of Well: [X] Oil Well [ ] Gas Well [ ] Other (specify)

9. Well Name and Number: Ute #1-33Z2

2. Name of Operator: ANR Production Company

10. API Well Number: 43-013-30334

3. Address of Operator: P. O. Box 749, Denver, Colorado 80201-0749

4. Telephone Number: (303)572-1121

11. Field and Pool, or Wildcat: Bluebell

5. Location of Well
Footage : 2230' FNL & 1582' FEL (SWNE)
QQ, Sec, T., R., M. : Sec 33, T1N, R2W
County : Duchesne
State : UTAH

12. CHECK APPROPRIATE BOXES TO INDICATE NATURE OF NOTICE, REPORT, OR OTHER DATA

NOTICE OF INTENT (Submit in Duplicate)

- [ ] Abandonment
- [ ] Casing Repair
- [ ] Change of Plans
- [ ] Conversion to Injection
- [ ] Fracture Treat
- [ ] Multiple Completion
- [ ] Other
- [ ] New Construction
- [ ] Pull or Alter Casing
- [ ] Recompletion
- [ ] Shoot or Acidize
- [ ] Vent or Flare
- [ ] Water Shut-Off

Approximate Date Work Will Start _____

SUBSEQUENT REPORT (Submit Original Form Only)

- [ ] Abandonment *
- [ ] Casing Repair
- [ ] Change of Plans
- [ ] Conversion to Injection
- [ ] Fracture Treat
- [X] Other Gas Anchor design modified
- [ ] New Construction
- [ ] Pull or Alter Casing
- [ ] Shoot or Acidize
- [ ] Vent or Flare
- [ ] Water Shut-Off

Date of Work Completion 9-8-90

Report results of Multiple Completions and Recompletions to different reservoirs on WELL COMPLETION OR RECOMPLETION AND LOG form.

* Must be accompanied by a cement verification report.

13. DESCRIBE PROPOSED OR COMPLETED OPERATIONS (Clearly state all pertinent details, and give pertinent dates. If well is directionally drilled, give subsurface locations and measured and true vertical depths for all markers and zones pertinent to this work.)

The well dropped in production to the point it was uneconomical to operate. We moved onto the well and pulled the production equipment. Approximately 30 joints of tubing were found to be defective and in need of replacement. It was determined that the the existing gas anchor was malfunctioning. The tubing was replaced and the gas anchor design modified. We also changed the rod design to reduce future rod parts.

RECEIVED
APR 25 1991
DIVISION OF
OIL GAS & MINING

14. I hereby certify that the foregoing is true and correct

Name & Signature: D. L. Buss — D. L. Buss

Title: Supervisor/Accounting Date: 4-23-91

(State Use Only)

Form 3160-5
(June 1990)

UNITED STATES
DEPARTMENT OF THE INTERIOR
BUREAU OF LAND MANAGEMENT

FORM APPROVED
Budget Bureau No. 1004-0135
Expires: March 31, 1993

SUNDRY NOTICES AND REPORTS ON WELLS

Do not use this form for proposals to drill or to deepen or reentry to a different reservoir.
Use "APPLICATION FOR PERMIT—" for such proposals

SUBMIT IN TRIPLICATE

5. Lease Designation and Serial No.: 14-20-H62-1703A
6. If Indian, Allottee or Tribe Name: Ute Tribal
7. If Unit or CA, Agreement Designation: CA #9C140
8. Well Name and No.: Ute Tribal #1-33Z2
9. API Well No.: 43-013-30334
10. Field and Pool, or Exploratory Area: Altamont/Bluebell
11. County or Parish, State: Duchesne County, Utah

1. Type of Well: [X] Oil Well [ ] Gas Well [ ] Other
2. Name of Operator: ANR Production Company
3. Address and Telephone No.: P. O. Box 749, Denver, Colorado 80201-0749 (303) 573-4476
4. Location of Well (Footage, Sec., T., R., M., or Survey Description): 2230' FNL & 1582' FEL (SWNE) Section 33, T1N-R2W

12. CHECK APPROPRIATE BOX(s) TO INDICATE NATURE OF NOTICE, REPORT, OR OTHER DATA

TYPE OF SUBMISSION	TYPE OF ACTION	
[X] Notice of Intent	[ ] Abandonment	[ ] Change of Plans
[ ] Subsequent Report	[ ] Recompletion	[ ] New Construction
[ ] Final Abandonment Notice	[ ] Plugging Back	[ ] Non-Routine Fracturing
	[ ] Casing Repair	[ ] Water Shut-Off
	[ ] Altering Casing	[ ] Conversion to Injection
	[X] Other NTL-2B Emergency Pit	[ ] Dispose Water (Note: Report results of multiple completion on Well Completion or Recompletion Report and Log form.)

13. Describe Proposed or Completed Operations (Clearly state all pertinent details, and give pertinent dates, including estimated date of starting any proposed work. If well is directionally drilled, give subsurface locations and measured and true vertical depths for all markers and zones pertinent to this work.)*

ANR Production Company hereby requests a variance to NTL-2B Section VI, "Temporary Use of Surface Pits."

ANR Production Company proposes to close the existing emergency pit using microbial remediation and install a lined pit. The liner will be seamless, 30 MIL, and 20 year warranted. Any emergency use of this pit will be reported to your office as soon as possible and the pit will be emptied and the liquids disposed of in an approved manner within 48 hours following its use, unless otherwise instructed by your office.

(Please see the attached letter submitted to your office 5/13/91 further describing this project.)

Accepted by the State of Utah Division of Oil, Gas and Mining
Date: 5-24-91
By: [illegible]

RECEIVED
MAY 20 1991
DIVISION OF OIL GAS & MINING

14. I hereby certify that the foregoing is true and correct

Signed Eileen Danni Dey Title Regulatory Analyst Date 5-16-91

(This space for Federal or State office use)

Approved by Federal Approval of this Action is Necessary Title Date

Conditions of approval, if any:

Title 18 U.S.C. Section 1001, makes it a crime for any person knowingly and willfully to make to any department or agency of the United States any false, fictitious or fraudulent statements or representations as to any matter within its jurisdiction.

*See Instruction on Reverse Side

Coastal
The Energy People

MICHAEL E. McALLISTER Ph.D.
DIRECTOR
ENVIRONMENTAL & SAFETY AFFAIRS
COASTAL OIL & GAS CORPORATION

May 13, 1991

Tim O'Brien
U.S. Dept. Of The Interior
Bureau of Land Management
Vernal District Office
170 South 500 East
Vernal, Utah 84078

Dear Tim:

The Bureau of Land Management - Vernal District Office is aware that Coastal Oil & Gas Corporation (COG) is conducting a pilot program using bioremediation technology as the closure technique. It is anticipated that the microbial treatment process will achieve a cost effective closure while eliminating long term waste disposal liabilities associated with conventional closure technologies.

COG is approximately 90 days into the pilot program. The selected pits have been inoculated and filled to the desired liquid level. The pit walls and bottoms have been manually turned to achieve maximum microbial contact. To date, we are able to photographically document the success of our efforts. If the program continues to progress as expected, we will use the technology as our plan of action for the remaining pits.

Utilizing microbes or any other type of closure technique will not eliminate the need for emergency containment in the event of an operating system upset and/or failure. COG respectfully requests, as part of our plan of action, that your office provide the necessary approvals to utilize <u>lined</u> emergency pits to meet this need.

COG shares your concern for protecting groundwater and other natural resources. We additionally recognize our responsibility to conduct our operations lawfully, ethically and in an environmentally responsible manner.

Our project intent is simple. COG will construct an "emergency pit" immediately adjacent to the existing pits. The new pits' size will be held to a minimum, yet large enough to provide adequate protection. The pit will be lined using a 30 mil, 20 year warranty, seamless liner. All emergency piping will be removed from the pit to be closed and diverted to the new lined excavation. The old pit will be closed by microbe or other closure technology.

COG feels we are eliminating the potential environmental liability exposure of the past practice of unlined pits. Additionally, the new lined pits afford COG, as a prudent operator, the opportunity to keep the pits clean, remove any liquids as a result of upset conditions within 48 hours and most importantly the pit liner will be inspected on a documented scheduled basis for maximum efficiency. If a problem is noted, corrections will receive priority attention.

To achieve maximum effectiveness from a microbial treatment process, warmer temperatures are essential. In order to take advantage of the summer weather, COG proposes to start our pit closure program as soon as practical. Therefore, your assistance in providing the necessary approvals in a timely manner, are key to the expedient success of this project.

To re-confirm our position, COG conducts its' operations in an environmentally sound manner. With your office's approval for the "lined emergency pits", we will continue with our planned pit closure program. At the same time this program offers future protection to the groundwater and other natural resources within our area of operation.

If there are any questions or if additional information is needed, please do not hesitate to call.

Very truly yours,

M. E. McAllister, Ph.D.

cc: David Little

bcc: R.L. Bartley
E. Dey
W.L. Donnelly
L.P. Streeb

Form 9

STATE OF UTAH
DEPARTMENT OF NATURAL RESOURCES
DIVISION OF OIL, GAS AND MINING

6. Lease Designation and Serial Number: 14-20-H62-1703A

7. Indian Allottee or Tribe Name: Ute Indian Tribe

SUNDRY NOTICES AND REPORTS ON WELLS

Do not use this form for proposals to drill new wells, deepen existing wells, or to reenter plugged and abandoned wells.
Use APPLICATION FOR PERMIT— for such proposals

8. Unit or Communitization Agreement: CA-9C140

1. Type of Well: [X] Oil Well [ ] Gas Well [ ] Other (specify)

9. Well Name and Number: Ute #1-33Z2

2. Name of Operator: ANR Production Company

10. API Well Number: 43-013-30334

3. Address of Operator: P. O. Box 749, Denver, Colorado 80201-0749

4. Telephone Number: (303)572-1121

11. Field and Pool, or Wildcat: Bluebell

5. Location of Well
Footage : 2230' FNL & 1582' FEL (SWNE)
QQ, Sec, T., R., M. : Sec 33, T1N, R2W
County : Duchesne
State : UTAH

12. CHECK APPROPRIATE BOXES TO INDICATE NATURE OF NOTICE, REPORT, OR OTHER DATA

NOTICE OF INTENT
(Submit in Duplicate)

- [ ] Abandonment
- [ ] Casing Repair
- [ ] Change of Plans
- [ ] Conversion to Injection
- [ ] Fracture Treat
- [ ] Multiple Completion
- [ ] Other
- [ ] New Construction
- [ ] Pull or Alter Casing
- [ ] Recompletion
- [ ] Shoot or Acidize
- [ ] Vent or Flare
- [ ] Water Shut-Off

Approximate Date Work Will Start _____

SUBSEQUENT REPORT
(Submit Original Form Only)

- [ ] Abandonment *
- [ ] Casing Repair
- [ ] Change of Plans
- [ ] Conversion to Injection
- [ ] Fracture Treat
- [X] Other Gas Anchor design modified
- [ ] New Construction
- [ ] Pull or Alter Casing
- [ ] Shoot or Acidize
- [ ] Vent or Flare
- [ ] Water Shut-Off

Date of Work Completion 9-8-90

Report results of Multiple Completions and Recompletions to different reservoirs on WELL COMPLETION OR RECOMPLETION AND LOG form.
* Must be accompanied by a cement verification report.

13. DESCRIBE PROPOSED OR COMPLETED OPERATIONS (Clearly state all pertinent details, and give pertinent dates. If well is directionally drilled, give subsurface locations and measured and true vertical depths for all markers and zones pertinent to this work.)

The well dropped in production to the point it was uneconomical to operate. We moved onto the well and pulled the production equipment. Approximately 30 joints of tubing were found to be defective and in need of replacement. It was determined that the the existing gas anchor was malfunctioning. The tubing was replaced and the gas anchor design modified. We also changed the rod design to reduce future rod parts.

RECEIVED
JUL 29 1991
DIVISION OF
OIL GAS & MINING

14. I hereby certify that the foregoing is true and correct
D. L. Buss
Name & Signature R. L. Buss Title Supervisor/Accounting Date 4-23-91

(State Use Only)

(8/90) See Instructions on Reverse Side

Well Name & No.	API No.	Lease Designation & Serial Number	If Indian, Allottee or Tribe Name	CA No.	LOCATION OF WELL Footages	Section, Township & Range	Field	County	
Miles 2-1B5	43-013-31257	Fee 11062	N/A	N/A	1567' FSL & 1868' FWL	NESW, 1-2S-5W	Altamont	Duchesne	
Miles 2-3B3	43-013-31261	Fee 11102	N/A	N/A	2078' FSL & 2477' FWL	NESW, 3-2S-3W	Altamont	Duchesne	
Monsen 1-21A3	43-013-30082	Patented 1590	N/A	N/A	1546' FNL & 705' FEL	SENE, 21-1S-3W	Altamont	Duchesne	
Monsen 2-22A3	43-013-31265	Fee 11098	N/A	N/A	1141' FSL & 251' FWL	SWSW, 22-1S-3W	Altamont	Duchesne	
Murdock 2-26B5	43-013-31124	Fee 1531	N/A	N/A	852' FWL & 937' FSL	SWSW, 26-2S-5W	Altamont	Duchesne	
Potter 1-24B5	43-013-30356	Patented 1730	N/A	N/A	1110' FNL & 828' FEL	SENE, 24-2S-5W	Altamont	Duchesne	
Potter 1-2B5	43-013-30293	Patented 1826	N/A	N/A	1832' FNL & 1385' FEL	SWNE, 2-2S-5W	Altamont	Duchesne	
Potter 2-24B5	43-013-31118	Fee 1731	N/A	N/A	922' FWL & 2124' FSL	NWSW, 24-2S-5W	Altamont	Duchesne	
Potter 2-6B4	43-013-31249	Fee 11038	N/A	N/A	1517' FSL & 1732' FWL	NESW, 6-2S-4W	Altamont	Duchesne	
Powell 1-33A3	43-013-30105	Fee 1625	N/A	N/A	2340' FNL & 660' FEL	SENE, 33-1S-3W	Altamont	Duchesne	
Powell 2-33A3	43-013-30704	Fee 2400	N/A	N/A	1582' FSL & 1558' FWL	NESW, 33-1S-3W	Altamont	Duchesne	
Reeder 1-17B5	43-013-30218	Patented 1710	N/A	N/A	1619' FNL & 563' FEL	SENE, 17-2S-5W	Altamont	Duchesne	
Remington 1-34A3	43-013-30139	Patented 1725	N/A	N/A	919' FNL & 1596' FEL	NWNE, 34-1S-3W	Altamont	Duchesne	
Remington 2-34A3	43-013-31091	Fee 1730	N/A	N/A	1645' FWL & 1833' FSL	NESW, 34-1S-3W	Altamont	Duchesen	
Roper 1-14B3	43-013-30217	Fee 1850	N/A	N/A	1623' FNL & 2102' FWL	SENW, 14-2S-3W	Bluebell	Duchesne	
Rust 1-4B3	43-013-30063	Patented 1575	N/A	N/A	2030' FNL & 660' FEL	SENE, 4-2S-3W	Altamont	Duchesne	
Rust 3-4B3	43-013-31070	Fee 1576	N/A	N/A	1072' FSL & 1460' FWL	SESW, 4-2S-3W	Altamont	Duchesne	
Smith 1-31B5	43-013-30577	Fee 1955	N/A	N/A	2232' FSL & 1588' FEL	NWSE, 31-2S-5W	Altamont	Duchesne	
State 1-19B1	43-013-30688	ML-30598 ~~Fee~~ 2395	N/A	N/A	1043' FWL & 1298' FNL	NWNW, 19-2S-1W	Bluebell	Duchesne	
Stevenson 3-29A3	43-013-31376	Fee 11442	N/A	N/A	1347' FNL & 1134' FWL	CNW, 29-1S-3W	Altamont	Duchesne	
Tew 1-15A3	43-013-30529	Fee 1945	N/A	N/A	1215' FEL & 1053' FNL	NENE, 15-1S-3W	Altamont	Duchesne	
Tew 1-1B5	43-013-30264	Patented 1870	N/A	N/A	1558' FNL & 671' FEL	NENE, 1-2S-5W	Altamont	Duchesne	
Todd 2-21A3	43-013-31296	Fee 11268	N/A	N/A	2456' FSL & 1106' FWL	NWSW, 21-1S-3W	Bluebell	Duchesne	
Weikert 2-29B4	43-013-31298	Fee 11332	N/A	N/A	1528' FNL & 1051' FWL	SWNW, 29-2S-4W	Bluebell	Duchesne	
Whitehead 1-22A3	43-013-30357	Patented 1885	N/A	N/A	2309' FNL & 2450' FEL	SWNE, 22-1S-3W	Altamont	Duchesne	
Winkler 1-28A3	43-013-30191	Patented 1750	N/A	N/A	660' FNL & 1664' FEL	NWNE, 28-1S-3W	Altamont	Duchesne	
Winkler 2-28A3	43-013-31109	Fee 1751	N/A	N/A	1645' FWL & 919' FSL	SESW, 28-1S-3W	Altamont	Duchesne	
Wright 2-13B5	43-013-31267	Fee 11115	N/A	N/A	2442' FNL & 2100' FWL	SENW, 13-2S-5W	Altamont	Duchesne	
Young 1-29B4	43-013-30246	Patented 1791	N/A	N/A	2311' FNL & 876' FEL	SENE, 29-2S-4W	Altamont	Duchesne	
Young 2-15A3	43-013-31301	Fee 11344	N/A	N/A	1827' FWL & 1968' FWL	NWSW, 15-1S-3W	Altamont	Duchesne	
Young 2-30B4	43-013-31366	Fee 11453	N/A	N/A	2400' FNL & 1600' FWL	SENW, 30-2S-4W	Altamont	Duchesne	
Ute Tribal 2-21B6	43-013-31424	14-20-H62-2489 11615	Ute	9639	1226' FSL & 1306' FEL	SESE, 22-2S-6W	Altamont	Duchesne	UTU[illegible]
Ute 1-34A4	43-013-30076	14-20-H62-1774 1585	Ute	9640	1050' FWL & 1900' FNL	SWNW, 12-2S-3W	Bluebell	Duchesne	9679
Ute 1-36A4	43-013-30069	14-20-H62-1793 1580	Ute	9642	1544' FEL & 1419' FNL	SWNE, 28-2S-4W	Altamont	Duchesne	9681
Ute 1-1B4	43-013-30129	14-20-H62-1798 1700	Ute	9649	500' FNL & 2380' FWL	NENW, 1-2S-4W	Altamont	Duchesne	
Ute Jenks 2-1B4	43-013-31197	14-20-H62-1782 10844	Ute	9649	1167' FSL & 920' FWL	SWSW, 33-1N-2W	Bluebell	Duchesne	9C140
Evans 2-19B3	43-013-31113	14-20-H62-1734 1777	Ute	9678	983' FSL & 683' FEL	SESE, 21-2S-6W	Altamont	Duchesne	9639
Ute 3-12B3	43-013-31379	14-20-H62-1810 11490	Ute	9679	2219' FNL & 2213' FEL	SWNE, 8-1S-1E	Bluebell	Uintah	9C138
Ute 1-28B4	43-013-30242	14-20-H62-1745 1796	Ute	9681	1727' FWL & 1675' FSL	NESW, 19-2S-3W	Altamont	Duchesne	9678
Murdock 2-34B5	43-013-31132	14-20-H62-2511 10456	Ute	9685	1420' FNL & 1356' FEL	SWNE, 34-1S-4W	Altamont	Duchesne	9640
Ute Tribal 10-13A4	43-013-30301	14-20-H62-1685 5925	Ute	9C-126	2230' FNL & 1582' FEL	SWNE, 33-1N-2W	Bluebell	Duchesne	9C-140
Ute 1-8A1E	43-047-30173	14-20-H62-2714 1846	Ute	9C138	1543' FSL & 2251' FWL	NESW, 34-2S-5W	Altamont	Duchesne	9685
Ute 2-33Z2	43-013-31111	14-20-H62-1703 10451	Ute	9C140	802' FNL & 1545' FWL	NWNE, 13-1S-4W	Altamont	Duchesne	9C126
→ Ute Tribal 1-33Z2	43-013-30334	14-20-H62-1703 1851	Ute	9C140	1660' FSL & 917' FWL	NWSW, 18-2S-3W	Altamont	Duchesne	UTU17081
Myrin Ranch 2-18B3	43-013-31297	14-20-H62-1744,4521,4522,4554	N/A 11475	UTU70814	975' FNL & 936' FEL	NENE, 36-1S-4W	Altamont	Duchesne	9642
Ute Tribal 2-22B6	43-013-31444	14-20-H62-4644 11641	Ute	UTU73743	1401' FSL & 1295' FWL	NWSW, 15-2S-6W	Altamont	Duchesne	UTU73396
Ute 1-15B6	43-013-31484	14-20-H62-4647 11810	Ute	UTU73964	1879' FNL & 1070' FEL	SENE, 1-2S-4W	Altamont	Duchesne	9649
Ute 1-25A3	43-013-30370	14-20-H62-1802 1920	Ute	N/A	1727' FNL & 1784' FEL	SWNE, 25-1S-3W	Bluebell	Duchesne	
Ute 1-26A3	43-013-30348	14-20-H62-1803 1890	Ute	N/A	1869' FNL & 1731' FWL	SENW, 26-1S-3W	Bluebell	Duchesne	

FORM 9

STATE OF UTAH
DIVISION OF OIL, GAS AND MINING

5. Lease Designation and Serial Number: See Attached

SUNDRY NOTICES AND REPORTS ON WELLS

Do not use this form for proposals to drill new wells, deepen existing wells, or to reenter plugged and abandoned wells.
Use APPLICATION FOR PERMIT TO DRILL OR DEEPEN form for such proposals.

6. If Indian, Allottee or Tribe Name: See Attached

7. Unit Agreement Name: See Attached

1. Type of Well: OIL [X] GAS [ ] OTHER:

8. Well Name and Number: See Attached

2. Name of Operator: Coastal Oil & Gas Corporation

9. API Well Number: See Attached

3. Address and Telephone Number: P.O. Box 749, Denver, CO 80201-0749 (303) 573-4455

10. Field and Pool, or Wildcat: See Attached

4. Location of Well

Footages: See Attached
QQ, Sec., T., R., M.: See Attached
County: See Attached
State: Utah

11. **CHECK APPROPRIATE BOXES TO INDICATE NATURE OF NOTICE, REPORT, OR OTHER DATA**

NOTICE OF INTENT
(Submit In Duplicate)

- [ ] Abandon
- [ ] Repair Casing
- [ ] Change of Plans
- [ ] Convert to Injection
- [ ] Fracture Treat or Acidize
- [ ] Multiple Completion
- [ ] Other
- [ ] New Construction
- [ ] Pull or Alter Casing
- [ ] Recompletion
- [ ] Perforate
- [ ] Vent or Flare
- [ ] Water Shut-Off

Approximate date work will start

SUBSEQUENT REPORT
(Submit Original Form Only)

- [ ] Abandon *
- [ ] Repair Casing
- [ ] Change of Plans
- [ ] Convert to Injection
- [ ] Fracture Treat or Acidize
- [X] Other Change of Operator
- [ ] New Construction
- [ ] Pull or Alter Casing
- [ ] Perforate
- [ ] Vent or Flare
- [ ] Water Shut-Off

Date of work completion

Report results of **Multiple Completions** and **Recompletions** to different reservoirs on WELL COMPLETION OR RECOMPLETION REPORT AND LOG form.

* Must be accompanied by a cement verification report.

12. DESCRIBE PROPOSED OR COMPLETED OPERATIONS (Clearly state all pertinent details, and give pertinent dates. If well is directionally drilled, give subsurface locations and measured and true vertical depths for all markers and zones pertinent to this work.)

Please be advised that effective December 27, 1995, ANR Production Company relinquished and Coastal Oil & Gas Corporation assumed operations for the subject wells (see attached). Bond coverage pursuant to 43 CFR 3104 for lease activities is being provided by Coastal Oil & Gas Corporation under the following bonds: State of Utah #102103, BLM Nationwide Bond #U605382-9, and BIA Nationwide Bond #11-40-66A. Coastal Oil & Gas Corporation, as operator, agrees to be responsible under the terms and conditions of the leases for the operations conducted upon leased lands.

Bonnie Carson
Bonnie Carson, Sr. Environmental & Safety Analyst
ANR Production Company

RECEIVED
MAR - 8 1996
DIV OF OIL, GAS & MINING

13.

Name & Signature: Sheila Bremer
Title: Sheila Bremer, Environmental & Safety Analyst, Coastal Oil & Gas Corporation
Date: 03/07/96

(This space for State use only)

(5/94)

(See Instructions on Reverse Side)

UNITED STATES GOVERNMENT

memorandum

DATE: August 16, 1996

REPLY TO ATTN OF: Superintendent, Uintah and Ouray Agency

SUBJECT: Designation of Successor Operator

TO: Bureau of Land Management, Vernal District Office

We are in receipt of the Designations of Successor Operator for our approval whereby Coastal Oil & Gas Corporation was designated as the new Operator for the Communization Agreements (CA) listed on the attached sheet, Exhibit "A".

The enclosed instruments were approved on the date of this letter. Coastal's Nationwide Bond will be used to cover all operations, and plugging and abandonment of wells.

If you have any questions, please contact this office at (801) 722-2406, Ext. 51/52/54.

Charles H Cameron

Enclosures
cc: Lisha Cordova, Utah State DOGM
Theresa Thompson, BLM/SLC

RECEIVED
AUG 20 1996
DIV. OF OIL, GAS & MINING

OPTIONAL FORM NO. 10
(REV. 1-80)
GSA FPMR (41 CFR) 101-11.6
5010-114
★U.S.GPO:1990-0-262-081/20165

DESIGNATION OF SUCCESSOR OPERATOR

Communitization Agreement Numbers are listed on attached Exhibit "A"

Designation of successor Operator for communitized area, Counties of Uintah and Duchesne, State of Utah, being:

(See attached Exhibit "A" for description of Communitization Agreements)

THIS INDENTURE, dated as of the 9th day of April, 1996, by and between Coastal Oil & Gas Corporation, hereinafter designated as "First Party", and the owners of communitized working interests, hereinafter designated as "Second Parties",

WHEREAS, under the provisions of the Act of February 25, 1920, 41 Stat. 437, 30 U.S.C. Secs. 181, et seq., as amended by the Act of August 8, 1946, 60 Stat. 950, a Communitization Agreement for the above Communitized Area, effective (see attached Exhibit "A") wherein ANR Production Company is designated as Operator of the communitized area; and

WHEREAS said, ANR Production Company has resigned as Operator, and the designation of successor operator is now required pursuant to the terms thereon; and

WHEREAS the First Party has been and hereby is designated by Second Parties as Operator of the communitized area, and said First Party desires to assume all the rights, duties and obligations of Operator under the said Communitization Agreement.

NOW, THEREFORE, in consideration of the premises hereinbefore set forth and the promises hereinafter stated, the First Party hereby covenants and agrees to fulfill the duties and assume the obligations of Operator of the communitized area under and pursuant to all the terms of said Communitization Agreement, and the Second Parties covenants and agree that, effective upon approval of this indenture by the Chief, Branch of Fluid Minerals, Bureau of Land Management, First Party shall be granted the exclusive right and privilege of exercising any and all rights and privileges as Operator, pursuant to the terms and conditions of said Communitization Agreement; and said Agreement being hereby incorporated herein by referenced and made a part hereof as fully and effectively as though said Agreement were expressly set forth in this instrument.

IN WITNESS WHEREOF, the parties hereto have executed this instrument as of the date hereinabove set forth.

FIRST PARTY
COASTAL OIL & GAS CORPORATION

By: C. E. Lindberg

C. E. Lindberg
Vice President

STATE OF COLORADO)
)
COUNTY OF Denver)

The foregoing instrument was acknowledged before me on the 9th day of April, 1996 by C. E. Lindberg, known to me to be the vice President of Coastal Oil & Gas Corporation, a Delaware corporation, on behalf of said corporation.

Given under my hand and official seal of office on this 9th day of April, 1996.

Gail Anne Bates
Notary Public in and for the State of Colorado

My Commission Expires:

MY COMMISSION EXPIRES: May 14, 1997
1314 W. Shepperd Ave., #203B
Littleton, Colorado 80120

GAIL ANNE BATES
NOTARY
PUBLIC
STATE OF COLORADO

The Designation of Successor Operator is hereby approved this **16th day of August, 1996,** for the Communitization Agreements listed on the attached sheet as Exhibit "A".

Charlie Cameron
Acting Superintendent
BIA - Uintah & Ouray Agency

Well Name	Well Location	County	State	Communitization Agreement Number	Communitization Agreement Description	Communitization Agreement Acres	Communitization Agreement Effective Date
Evans Ute 2-17B3	NWSW, 17-2S-3W	Duchesne	Utah	96104	All Sec. 17-T2S-R3W	640.00	10/01/73
Miles 1-35A4	SWNE, 35-1S-4W	Duchesne	Utah	9618	All Sec. 35-T1S-R4W	640.00	07/01/70
Miles 2-35A4	NWSW, 35-1S-4W	Duchesne	Utah	9618	All Sec. 35-T1S-R4W	640.00	07/01/70
Brotherson 2-11B4	SESW, 11-2S-4W	Duchesne	Utah	9623	All Sec. 11-T2S-R4W	640.00	09/01/70
Brotherson 2-2B4	NESW, 2-2S-4W	Duchesne	Utah	9635	All Sec. 2-T2S-R4W	684.24	03/29/71
Brotherson 1-2B4	SWNE, 2-2S-4W	Duchesne	Utah	9635	All Sec. 2-T2S-R4W	684.24	03/29/71
Broadhead 1-21B6	NWNE, 21-2S-6W	Duchesne	Utah	9639	All Sec. 21-T2S-R6W	640.00	10/21/71
Ute Tribal 2-21B6	SESE, 21-2S-6W	Duchesne	Utah	9639	Sec. 21-T2S-R6W	640.00	10/21/71
Ute 1-34A4	SWNE, 34-1S-4W	Duchesne	Utah	9640	All Sec. 34-T1S-R4W	640.00	09/03/71
Ute Brotherson 2-34A4	NWSW, 34-1S-4W	Duchesne	Utah	9640	All Sec. 34-T1S-R4W	640.00	09/03/71
Rust 2-36A4	NESW, 36-1S-4W	Duchesne	Utah	9642	All Sec. 36-T1S-R4W	640.00	12/08/71
Ute 1-36A4	NENE, 36-1S-4W	Duchesne	Utah	9642	All Sec. 36-T1S-R4W	640.00	12/08/72
Babcock 1-12B4	SENE, 12-2S-4W	Duchesne	Utah	9643	All Sec. 12-T2S-R4W	640.00	02/22/72
Babcock 2-12B4	SWSW, 12-2S-4W	Duchesne	Utah	9643	All Sec. 12-T2S-R4W	640.00	02/22/72
Ellsworth 2-9B4	NESW, 9-2S-4W	Duchesne	Utah	9645	All Sec. 9-T2S-R4W	640.00	03/27/72
Ellsworth 1-9B4	SENE, 9-2S-4W	Duchesne	Utah	9645	All Sec. 9-T2S-R4W	640.00	03/27/72
Burton 2-15B5	NWSW, 15-2S-5W	Duchesne	Utah	9646	All Sec. 15-T2S-R5W	640.00	05/30/72
Ute 1-1B4	SENE, 1-2S-4W	Duchesne	Utah	9649	All Sec. 1-T2S-R4W	688.00	05/15/72
Ute Jenks 2-1B4	NENW, 1-2S-4W	Duchesne	Utah	9649	All Sec. 1-T2S-R4W	688.00	05/15/72
Tew 2-10B5	SWSW, 10-2S-5W	Duchesne	Utah	9654	All Sec. 10-T2S-R5W	640.00	09/26/72
Goodrich 1-2B3	NWSE, 2-2S-3W	Duchesne	Utah	9655	All Sec. 2-T2S-R3W	645.84	09/15/72
Goodrich 2-2B3	NENW, 2-2S-3W	Duchesne	Utah	9655	All Sec. 2-T2S-R3W	645.84	09/15/72
Robb 2-29B5	SESW, 29-2S-5W	Duchesne	Utah	9656	All Sec. 29-T2S-R5W	640.00	10/01/72
Ellsworth 1-16B4	NENE, 16-2S-4W	Duchesne	Utah	9659	All Sec. 16-T2S-R4W	640.00	10/04/72
Ellsworth 2-16B4	NWSW, 16-2S-4W	Duchesne	Utah	9659	All Sec. 16-T2S-R4W	640.00	10/04/72
Lake Fork 2-13B4	SWSW, 13-2S-4W	Duchesne	Utah	9660	All Sec. 13-T2S-R4W	640.00	10/26/72
Jessen 2-21A4	SESW, 21-1S-4W	Duchesne	Utah	9661	All Sec. 21-T1S-R4W	640.00	09/01/72
Jenkins 2-1B3	SWSW, 1-2S-3W	Duchesne	Utah	9670	All Sec. 1-T2S-R3W	644.92	11/30/72
Jenkins 1-1B3	SENW, 1-2S-3W	Duchesne	Utah	9670	All Sec. 1-T2S-R3W	644.92	11/30/72
Birch 3-27B5	SWSW, 27-2S-5W	Duchesne	Utah	9671	All Sec. 27-T2S-R5W	640.00	01/30/73
Lazy K 2-11B3	NWNE, 11-2S-3W	Duchesne	Utah	9672	All Sec. 11-T2S-R3W	640.00	01/30/73
Rudy 1-11B3	NWSE, 11-2S-3W	Duchesne	Utah	9672	All Sec. 11-T2S-R3W	640.00	01/30/73
Brotherson 1-24B4	SWNE, 24-2S-4W	Duchesne	Utah	9674	All Sec. 24-T2S-R4W	640.00	03/13/73
Evans 2-19B3	NESW, 19-2S-3W	Duchesne	Utah	9678	All Sec. 19-T2S-R3W	632.66	01/22/73
Evans 1-19B3	NENE, 19-2S-3W	Duchesne	Utah	9678	All Sec. 19-T2S-R3W	632.66	01/22/73
Ute 3-12B3	SWNW, 12-2S-3W	Duchesne	Utah	9679	All Sec. 12-T2S-R3W	640.00	04/16/73

Well Name	Well Location	County	State	Communitization Agreement Number	Communitization Agreement Description	Communitization Agreement Acres	Communitization Agreement Effective Date
Jenkins 2-12B3	SENE, 12-2S-3W	Duchesne	Utah	9679	All Sec. 12-T2S-R3W	640.00	04/16/73
Bleazard 2-28B4	NESW, 28-2S-4W	Duchesne	Utah	9681	All Sec. 28-T2S-R4W	640.00	03/15/73
Ute 1-28B4	SWNE, 28-2S-4W	Duchesne	Utah	9681	All Sec. 28-T2S-R4W	640.00	03/15/73
Murdock 2-34B5	NESW, 34-2S-5W	Duchesne	Utah	9685	All Sec. 34-T2S-R5W	640.00	02/12/73
Ute Tribal 10-13A4	NWNE, 13-1S-4W	Duchesne	Utah	9C-126	All Sec. 13-T1S-R4W	640.00	03/10/74
C.R. Aimes 1-23A4	SENE, 23-1S-4W	Duchesne	Utah	9C133	All Sec. 23-T1S-R4W	640.00	03/01/74
Ute 1-8A1E	SWNE, 8-1S-1E	Uintah	Utah	9C138	All Sec. 8-T1S-R1E	640.00	10/21/74
Ute 2-33Z2	SWSW, 33-1N-2W	Duchesne	Utah	9C140	All Sec. 33-T1N-R2W	640.00	08/01/75
Ute Tribal 1-33Z2	SWNE, 33-1N-2W	Duchesne	Utah	9C140	All Sec. 33-T1N-R2W	640.00	08/01/75
Ute Smith 1-30B5	NESE, 30-2S-5W	Duchesne	Utah	UT080I4987C696	All Sec. 30-T2S-R5W	609.24	06/18/81
Myrin Ranch 2-18B3	NWSW, 18-2S-3W	Duchesne	Utah	UTU70814	All Sec. 18-T2S-R3W	629.70	11/05/92
Ute Tribal 2-22B6	SESE, 22-2S-6W	Duchesne	Utah	UTU73743	Sec. 22-T2S-R6W	640.00	09/06/94
Ute 1-15B6	NWSW, 15-2S-6W	Duchesne	Utah	UTU73964	All Sec. 15-T2S-T6W	640.00	04/11/95

United States Department of the Interior

BUREAU OF LAND MANAGEMENT
Utah State Office
P.O. Box 45155
Salt Lake City, Utah 84145-0155

IN REPLY REFER TO:
UT-922

April 11, 1996

Memorandum

TO: Superintendent, Uintah and Ouray Agency, Ft. Duchesne, Utah

FROM: Chief, Branch of Fluid Minerals, BLM, Utah State Office, Salt Lake City, Utah

SUBJECT: Successor of Operator, Communitization Agreement's (CA) 96-000018, 96-000023, 96-000035, 96-000039, 96-000040, 96-000042, 96-000043, 96-000045, 96-000046, 96-000049, 96-000054, 96-000055, 96-000056, 96-000059, 96-000060, 96-000061, 96-000070, 96-000071, 96-000072, 96-000074, 96-000078, 96-000079, 96-000081, 96-000085, 96-000104, 9C-000126, 9C-000133, 9C-000138, 9C-000140, UT080I49-87C696, UT70814, UTU73743 and UTU73964, Duchesne and Uintah Counties, Utah

The enclosed Designation of Successor of Operators for CA's 96-000018, 96-000023, 96-000035, 96-000039, 96-000040, 96-000042, 96-000043, 96-000045, 96-000046, 96-000049, 96-000054, 96-000055, 96-000056, 96-000059, 96-000060, 96-000061, 96-000070, 96-000071, 96-000072, 96-000074, 96-000078, 96-000079, 96-000081, 96-000085, 96-000104, 9C-000126, 9C-000133, 9C-000138, 9C-000140, UT080I49-87C696, UT70814, UTU73743 and UTU73964, Duchesne and Uintah Counties, Utah, have been reviewed by this office and found to be acceptable and we recommend approval. The new operator will be Coastal Oil & Gas Corporation. Upon approval of these Successor of Operators, please return one copy to this office.

If you have any questions, please contact Teresa Thompson at (801) 539-4047.

Enclosures

bcc: ~~96-000109~~
CA 's (33)
DM - Vernal
Division Oil, Gas & Mining
Agr. Sec. Chron.
Fluid Chron

RECEIVED
APR 12 1996
DIV. OF OIL, GAS & MINING

Division of Oil, Gas and Mining
OPERATOR CHANGE WORKSHEET

Routing: GH

1-LEC 7-SJ	
2-DTS 8-FILE	
3-VLD	
4-RJF	
5-LEC	
6-FILM	

Attach all documentation received by the division regarding this change.
Initial each listed item when completed. Write N/A if item is not applicable.

☒ Change of Operator (well sold) ☐ Designation of Agent
☐ Designation of Operator ☐ Operator Name Change Only

The operator of the well(s) listed below has changed (EFFECTIVE DATE: 12-27-95)

TO (new operator) COASTAL OIL & GAS CORP
(address) PO BOX 749
DENVER CO 80201-0749

phone (303)572-1121
account no. N 0230(B)

FROM (former operator) ANR PRODUCTION CO INC
(address) PO BOX 749
DENVER CO 80201-0749

phone (303)572-1121
account no. N0675

Well(s) (attach additional page if needed):

Name	API	Entity	Sec	Twp	Rng	Lease Type
SEE ATTACHED	013-30334					

OPERATOR CHANGE DOCUMENTATION

Lec 1. (Rule R615-8-10) Sundry or other legal documentation has been received from former operator (Attach to this form). (Rec'd 3-8-96)

Lec 2. (Rule R615-8-10) Sundry or other legal documentation has been received from new operator (Attach to this form). (Rec'd 3-8-96)

N/A 3. The Department of Commerce has been contacted if the new operator above is not currently operating any wells in Utah. Is company registered with the state? (yes/no) _____ If yes, show company file number: _____.

N/A 4. **(For Indian and Federal Wells ONLY)** The BLM has been contacted regarding this change (attach Telephone Documentation Form to this report). Make note of BLM status in comments section of this form. Management review of **Federal and Indian** well operator changes should take place prior to completion of steps 5 through 9 below.

Lec 5. Changes have been entered in the Oil and Gas Information System (Wang/IBM) for each well listed above. (3-11-96)(4-3-96 Indian)(4-15-96 Fee C.A.'s)(8-20-96 Indian C.A.'s)

Lec 6. Cardex file has been updated for each well listed above.

Lec 7. Well file labels have been updated for each well listed above.

Lec 8. Changes have been included on the monthly "Operator, Address, and Account Changes" memo for distribution to State Lands and the Tax Commission. (3-11-96)

Lec 9. A folder has been set up for the Operator Change file, and a copy of this page has been placed there for reference during routing and processing of the original documents.

– OVER –

OPERATOR CHANGE WORKSHEET (CONTINUED) Initial each item when completed. Write N/A if item is not applicable.

ENTITY REVIEW

Yes 1. (Rule R615-8-7) Entity assignments have been reviewed for all wells listed above. Were entity changes made? (yes/no) ____ (If entity assignments were changed, attach copies of Form 6, Entity Action Form).

N/A 2. State Lands and the Tax Commission have been notified through normal procedures of entity changes.

BOND VERIFICATION (Fee wells only) Surety No. U605382-1 ($80,000) United Pacific Ins. Co.

Yes 1. (Rule R615-3-1) The new operator of any fee lease well listed above has furnished a proper bond.

* Upon Compl. of routing.

___ 2. A copy of this form has been placed in the new and former operators' bond files.

Yes 3. The former operator has requested a release of liability from their bond (yes/no) ___. Today's date March 11, 1996. If yes, division response was made by letter dated _____ 19___. (Same Bond as Coastal)

LEASE INTEREST OWNER NOTIFICATION RESPONSIBILITY

N/A 1. (Rule R615-2-10) The former operator/lessee of any **fee lease** well listed above has been notified by letter dated _____ 19___, of their responsibility to notify any person with an interest in such lease of the change of operator. Documentation of such notification has been requested.

___ 2. Copies of documents have been sent to State Lands for changes involving **State leases**.

FILMING

VS 1. All attachments to this form have been microfilmed. Date: 1-7 1997.

FILING

___ 1. Copies of all attachments to this form have been filed in each well file.

___ 2. The original of this form and the original attachments have been filed in the Operator Change file.

COMMENTS

960311 This change involves Fee lease / non C.A. wells ~~only~~ & State lease wells.
~~C.A. & Indian lease wells will be handled on separate change.~~
960412 BLM / SL Aprv. C.A.'s 4-11-96.
960820 BIA Aprv. CA's 8-16-96.
960329 BIA Aprv. Indian Lease wells 3-26-96.
* 961107 Lemicq 2-5B2 / 43-013-30784 under review at this time; no chg. yet!

WE71/34-35

United States Department of the Interior

BUREAU OF LAND MANAGEMENT
Utah State Office
P.O. Box 45155
Salt Lake City, UT 84145-0155

RECEIVED
JUL 12 2001
DIVISION OF
OIL, GAS AND MINING

In Reply Refer To:
3106
UTSL-065841
(UT-924)

JUL 10 2001

NOTICE

El Paso Production Oil & Gas Company	:	Oil and Gas
Nine Greenway Plaza	:	
Houston TX 77046-0095	:	

Name Change Recognized

Acceptable evidence has been received in this office concerning the name change of Coastal Oil & Gas Corporation into El Paso Production Oil & Gas Company with El Paso Production Oil & Gas Company being the surviving entity.

For our purposes, the name change is recognized effective March 9, 2001.

The oil and gas lease files identified on the enclosed exhibit have been noted as to the name change. The exhibit was compiled from a list of leases obtained from our computer program. We have not abstracted the lease files to determine if the entities affected by this name change hold an interest in the leases identified nor have we attempted to identify leases where the entitities are the operator on the ground maintaining no vested recorded title or operating rights interests. We will be notifying the Minerals Management Service and all applicable Bureau of Land Management offices of the change by a copy of this notice. If additional documentation for changes of operator are required by our Field Offices, you will be contacted by them.

If you identify additional leases in which the entities maintain an interest, please contact this office and we will appropriately document those files with a copy of this Notice.

Due to the name change, the name of the principal/obligor on the bond is required to be changed from Coastal Oil & Gas Corporation to El Paso Production Oil & Gas Company. You may accomplish this either by consent of surety rider on the original bond or a rider to the original bond. The bonds are held in Wyoming and Colorado.

Opolonia L. Abeyta
Acting Chief, Branch of
Minerals Adjudication

Enclosure
1. Exhibit of Leases (1 pp)

cc: Moab Field Office
Vernal Field Office
MMS, Reference Data Branch, MS3130, PO Box 5860, Denver CO 80217
State of Utah, DOGM, Attn: Jim Thompson (Ste. 1210), Box 145801, SLC UT 84114
Teresa Thompson (UT-922)
Joe Incardine (UT-921)

STATE OF UTAH
DEPARTMENT OF NATURAL RESOURCES
DIVISION OF OIL, GAS AND MINING

FORM 9

SUNDRY NOTICES AND REPORTS ON WELLS

Do not use this form for proposals to drill new wells, significantly deepen existing wells below current bottom-hole depth, reenter plugged wells, or to drill horizontal laterals. Use APPLICATION FOR PERMIT TO DRILL form for such proposals.

5. LEASE DESIGNATION AND SERIAL NUMBER:

6. IF INDIAN, ALLOTTEE OR TRIBE NAME:

7. UNIT or CA AGREEMENT NAME:

1. TYPE OF WELL: OIL WELL ☐ GAS WELL ☐ OTHER

8. WELL NAME and NUMBER: Exhibit "A"

2. NAME OF OPERATOR: El Paso Production Oil & Gas Company

9. API NUMBER:

3. ADDRESS OF OPERATOR: 8 South 1200 East CITY Vernal STATE Utah ZIP 84078 PHONE NUMBER: 435-789-4433

10. FIELD AND POOL, OR WILDCAT:

4. LOCATION OF WELL

FOOTAGES AT SURFACE:

COUNTY:

QTR/QTR, SECTION, TOWNSHIP, RANGE, MERIDIAN:

STATE: UTAH

11. CHECK APPROPRIATE BOXES TO INDICATE NATURE OF NOTICE, REPORT, OR OTHER DATA

TYPE OF SUBMISSION	TYPE OF ACTION		
☐ NOTICE OF INTENT (Submit in Duplicate)	☐ ACIDIZE	☐ DEEPEN	☐ REPERFORATE CURRENT FORMATION
Approximate date work will start:	☐ ALTER CASING	☐ FRACTURE TREAT	☐ SIDETRACK TO REPAIR WELL
	☐ CASING REPAIR	☐ NEW CONSTRUCTION	☐ TEMPORARILY ABANDON
	☐ CHANGE TO PREVIOUS PLANS	☐ OPERATOR CHANGE	☐ TUBING REPAIR
	☐ CHANGE TUBING	☐ PLUG AND ABANDON	☐ VENT OR FLARE
☐ SUBSEQUENT REPORT (Submit Original Form Only)	☐ CHANGE WELL NAME	☐ PLUG BACK	☐ WATER DISPOSAL
Date of work completion:	☐ CHANGE WELL STATUS	☐ PRODUCTION (START/RESUME)	☐ WATER SHUT-OFF
	☐ COMMINGLE PRODUCING FORMATIONS	☐ RECLAMATION OF WELL SITE	☒ OTHER: Name Change
	☐ CONVERT WELL TYPE	☐ RECOMPLETE - DIFFERENT FORMATION	

12. DESCRIBE PROPOSED OR COMPLETED OPERATIONS. Clearly show all pertinent details including dates, depths, volumes, etc.

As a result of the merger between The Coastal Corporation and a wholly owned subsidary of El Paso Energy Corporation, the name of Coastal Oil & Gas Corporation has been changed to El Paso Production Oil & Gas Company effective March 9, 2001.

See Exhibit "A"

Bond # 400JU0708

Coastal Oil & Gas Corporation

NAME (PLEASE PRINT) John T. Elzner TITLE Vice President

SIGNATURE DATE 06-15-01

El Paso Production Oil & Gas Company

NAME (PLEASE PRINT) John T. Elzner TITLE Vice President

SIGNATURE DATE 06-15-01

(This space for State use only)

RECEIVED

JUN 19 2001

DIVISION OF
OIL, GAS AND MINING

(5/2000)

(See Instructions on Reverse Side)

State of Delaware

Office of the Secretary of State

I, HARRIET SMITH WINDSOR, SECRETARY OF STATE OF THE STATE OF DELAWARE, DO HEREBY CERTIFY THE ATTACHED IS A TRUE AND CORRECT COPY OF THE CERTIFICATE OF AMENDMENT OF "COASTAL OIL & GAS CORPORATION", CHANGING ITS NAME FROM "COASTAL OIL & GAS CORPORATION" TO "EL PASO PRODUCTION OIL & GAS COMPANY", FILED IN THIS OFFICE ON THE NINTH DAY OF MARCH, A.D. 2001, AT 11 O'CLOCK A.M.

RECEIVED
JUN [illegible] 2001
DIVISION OF
OIL, GAS AND MINING

Harriet Smith Windsor

Harriet Smith Windsor, Secretary of State

0610204 8100

010162788

AUTHENTICATION: 1061007

DATE: 04-03-01

CERTIFICATE OF AMENDMENT

OF

CERTIFICATE OF INCORPORATION

COASTAL OIL & GAS CORPORATION (the "Company"), a corporation organized and existing under and by virtue of the General Corporation Law of the State of Delaware, DOES HEREBY CERTIFY:

FIRST: That the Board of Directors of the Company, by the unanimous written consent of its members, filed with the minutes of the Board, adopted a resolution proposing and declaring advisable the following amendment to the Certificate of Incorporation of the Company:

RESOLVED that it is deemed advisable that the Certificate of Incorporation of this Company be amended, and that said Certificate of Incorporation be so amended, by changing the Article thereof numbered "FIRST." so that, as amended, said Article shall be and read as follows:

"FIRST. The name of the corporation is El Paso Production Oil & Gas Company."

SECOND: That in lieu of a meeting and vote of stockholders, the stockholders entitled to vote have given unanimous written consent to said amendment in accordance with the provisions of Section 228 of the General Corporation Law of the State of Delaware.

THIRD: That the aforesaid amendment was duly adopted in accordance with the applicable provisions of Sections 242 and 228 of the General Corporation Law of the State of Delaware.

IN WITNESS WHEREOF, said COASTAL OIL & GAS CORPORATION has caused this certificate to be signed on its behalf by a Vice President and attested by an Assistant Secretary, this 9th day of March 2001.

COASTAL OIL & GAS CORPORATION

David L. Siddall
Vice President

Attest:

Margaret E. Roark, Assistant Secretary

RECEIVED

STATE OF DELAWARE
SECRETARY OF STATE
DIVISION OF CORPORATIONS
FILED 11:00 AM 03/09/2001
010118394 - 0610204

JUN 19 2001

DIVISION OF
OIL, GAS AND MINING

File Copy

United States Department of the Interior

BUREAU OF INDIAN AFFAIRS

Uintah and Ouray Agency
P. O. Box 130
988 South 7500 East
Fort Duchesne, Utah 84026-0130
Phone: (435) 722-4300 Fax: (435) 722-2323

IN REPLY REFER TO:
Minerals and Mining
Phone: (435) 722-4310
Fax: (435) 722-2809

August 16, 2001

El Paso Production Company
Attn: Elizabeth R. Williams
Nine Greenway Plaza
Houston, TX 77046-0995

Dear Mrs. Williams:

We are in receipt of the corporate documentation for the name change from Coastal Oil & Gas Corporation to El Paso Production Oil and Gas Company.

All documents appear to be in order, and the approval is hereby authorized to change all records, including change of operator of certain oil and gas wells, Rights-of-Way, Communitization Agreements, Oil and Gas Leases, Exploration and Development Agreements, etc. from Coastal Oil & Gas Corporation to "El Paso Production Oil and Gas Company".

Approval of this name change is August 16, 2001, but effective on March 9, 2001. If you have any questions, please do not hesitate to contact this office.

Respectfully,

Charles H Cameron

Acting Superintendent

RECEIVED

AUG 22 2001

DIVISION OF
OIL, GAS AND MINING

Division of Oil, Gas and Mining

OPERATOR CHANGE WORKSHEET

ROUTING		
1. GLH		4-KAS
2. CDW ✓		5-LP ✓
3. JLT		6-FILE

Enter date after each listed item is completed

Change of Operator (Well Sold) — Designation of Agent

Operator Name Change (Only) — X **Merger**

The operator of the well(s) listed below has changed, effective: **3-09-2001**

FROM: (Old Operator):	**TO:** (New Operator):
COASTAL OIL & GAS CORPORATION	EL PASO PRODUCTION OIL & GAS COMPANY
Address: 9 GREENWAY PLAZA STE 2721	Address: 9 GREENWAY PLAZA STE 2721 RM 2975B
HOUSTON, TX 77046-0995	HOUSTON, TX 77046-0995
Phone: 1-(713)-418-4635	Phone: 1-(832)-676-4721
Account N0230	Account N1845

CA No. **Unit:**

WELL(S)

NAME	API NO	ENTITY NO	SEC TWN RNG	LEASE TYPE	WELL TYPE	WELL STATUS
COLTHARP 1-27Z1 (CA 96-65)	43-013-30151	4700	27-01N-01W	INDIAN	OW	P
UTE TRIBAL 1-30Z1 (CA 84705C)	43-013-30813	9405	30-01N-01W	INDIAN	OW	P
UTE TRIBAL 1-31 (CA 73509)	43-013-30278	4755	31-01N-01W	INDIAN	OW	P
UTE TRIBAL 1-31A2	43-013-30401	1925	31-01S-02W	INDIAN	OW	P
UTE 1-32Z2	43-013-30379	1915	32-01N-02W	INDIAN	OW	P
UTE TRIBAL 1-33Z2 (CA 9C-140)	43-013-30334	1851	33-01N-02W	INDIAN	OW	P
UTE TRIBAL 2-33Z2 (CA 9C-140)	43-013-31111	10451	33-01N-02W	INDIAN	OW	P
UTE TRIBAL 2-34Z2	43-013-31167	10668	34-01N-02W	INDIAN	OW	P
UTE TRIBAL 3-35Z2	43-013-31133	10483	35-01N-02W	INDIAN	OW	P
JAMES POWELL 4	43-013-30071	8302	19-01S-02W	INDIAN	OW	P
MCELPRANG 1-31A1 (CA 96-50)	43-013-30190	5425	31-01S-01W	INDIAN	OW	S
LESLIE UTE 1-11A3	43-013-30893	9401	11-01S-03W	INDIAN	OW	P
L B UTE 1-13A3	43-013-30894	9402	13-01S-03W	INDIAN	OW	P
LAUREN UTE 1-23A3	43-013-30895	9403	23-01S-03W	INDIAN	OW	P
UTE TRIBAL 1-25A3	43-013-30370	1920	25-01S-03W	INDIAN	OW	P
UTE 2-25A3	43-013-31343	11361	25-01S-03W	INDIAN	OW	P
UTE TRIBAL 1-26A3	43-013-30348	1890	26-01S-03W	INDIAN	OW	P
UTE 2-26A3	43-013-31340	11349	26-01S-03W	INDIAN	OW	P
UTE 2-35A3	43-013-31292	11222	35-01S-03W	INDIAN	OW	P
UTE 3-35A3	43-013-31365	11454	35-01S-03W	INDIAN	OW	P
UTE UNIT 1-34A4 (CA 96-40)	43-013-30076	1585	34-01S-04W	INDIAN	OW	P

OPERATOR CHANGES DOCUMENTATION

1. (R649-8-10) Sundry or legal documentation was received from the **FORMER** operator on: 06/19/2001
2. (R649-8-10) Sundry or legal documentation was received from the **NEW** operator on: 06/19/2001
3. The new company has been checked through the **Department of Commerce, Division of Corporations Database on:** 06/21/2001

4. Is the new operator registered in the State of Utah: YES Business Number: 608186-0143

5. If **NO**, the operator was contacted contacted on: N/A

6. **Federal and Indian Lease Wells:** The BLM and or the BIA has approved the (merger, name change, or operator change for all wells listed on Federal or Indian leases on: 08/16/2001

7. **Federal and Indian Units:** The BLM or BIA has approved the successor of unit operator for wells listed on: 07/10/2001

8. **Federal and Indian Communization Agreements ("CA"):** The BLM or the BIA has approved the operator change for all wells listed involved in a CA on: 08/16/2001

9. **Underground Injection Control ("UIC")** The Division has approved UIC Form 5, **Transfer of Authority to Inject,** for the enhanced/secondary recovery unit/project for the water disposal well(s) listed on: N/A

DATA ENTRY:

1. Changes entered in the **Oil and Gas Database on:** 08/28/2001

2. Changes have been entered on the **Monthly Operator Change Spread Sheet on:** 08/28/2001

3. Bond information entered in RBDMS on: N/A

4. Fee wells attached to bond in RBDMS on: N/A

STATE BOND VERIFICATION:

1. State well(s) covered by Bond No.: N/A

FEDERAL BOND VERIFICATION:

1. Federal well(s) covered by Bond No.: N/A

INDIAN BOND VERIFICATION:

1. Indian well(s) covered by Bond No.: 103601473

FEE WELLS - BOND VERIFICATION/LEASE INTEREST OWNER NOTIFICATION:

1. (R649-3-1) The **NEW** operator of any fee well(s) listed covered by Bond No: N/A

2. The **FORMER** operator has requested a release of liability from their bond on: N/A
   The Division sent response by letter on: N/A

3. (R649-2-10) The **FORMER** operator of the Fee wells has been contacted and informed by a letter from the Division of their responsibility to notify all interest owners of this change on: _____

FILMING:

1. All attachments to this form have been **MICROFILMED** on: _____

FILING:

1. **ORIGINALS/COPIES** of all attachments pertaining to each individual well have been filled in each well file on: _____

COMMENTS: Master list of all wells involved in operator change from Coastal Oil & Gas Corporation to El Paso Production Oil and Gas Company shall be retained in the "Operator Change File".

Form 3160-5
(June 1990)

UNITED STATES
DEPARTMENT OF THE INTERIOR
BUREAU OF LAND MANAGEMENT

FORM APPROVED
Budget Bureau No. 1004-0135
Expires: March 31, 1993

SUNDRY NOTICES AND REPORTS ON WELLS

Do not use this form for proposals to drill or to deepen or reentry to a different reservoir.
Use "APPLICATION FOR PERMIT" - for such proposals

SUBMIT IN TRIPLICATE

5. Lease Designation and Serial No.: 14-20-H62-1703
6. If Indian, Alottee or Tribe Name: Ute Indian Tribe
7. If Unit or CA, Agreement Designation: 9C140
8. Well Name and No.: Ute Tribal #1-33Z2
9. API Well No.: 43-013-30334
10. Field and Pool, Or Exploratory Area: Altamont/Bluebell
11. County or Parish, State: Duchesne Co., UT

1. Type of Well: [X] Oil Well [ ] Gas Well [ ] Other
2. Name of Operator: Coastal Oil & Gas Corporation
3. Address and Telephone No.: P. O. Box 749, Denver, CO 80201-0749 (303) 573-4455
4. Location of Well (Footage, Sec., T., R., M., Or Survey Description): 2230' FNL & 1582' FEL, Section 33, T1N-R2W

12. CHECK APPROPRIATE BOX(S) TO INDICATE NATURE OF NOTICE, REPORT, OR OTHER DATA

TYPE OF SUBMISSION	TYPE OF ACTION	
[ ] Notice of Intent	[ ] Abandonment	[ ] Change of Plans
	[ ] Recompletion	[ ] New Construction
[X] Subsequent Report	[ ] Plugging Back	[ ] Non-Routine Fracturing
	[ ] Casing Repair	[ ] Water Shut-Off
[ ] Final Abandonment Notice	[ ] Altering Casing	[ ] Conversion to Injection
	[X] Other SWD Flowline installation	[ ] Dispose Water

(NOTE: Report results of multiple completion on Well Completion or Recompletion Report and Log form.)

13. Describe Proposed or Completed Operations (Clearly state all pertinent details, and give pertinent dates, including estimated date of starting any proposed work. If well is directionally drilled, give subsurface locations and measured and tru vertical depths for all markets and zones pertinent to this work.)*

A 2" steel SWD flowline has been installed on the subject well. All applicable damage settlements have been made.

RECEIVED
APR 28 1997
DIV. OF OIL, GAS & MINING

14. I hereby certify that the foregoing is true and correct

Signed: Sheila Bremer — Titl: Environmental & Safety Analyst — Dat: 04/24/97

(This space for Federal or State office use)

APPROVED BY _____ Titl _____ Dat _____
Conditions of approval, if any:

Title 18 U.S.C. Section 1001, makes it a crime for any person knowingly and willfully to make to any department or agency of the United States any false, ficticious or fraudulent statements or representations as to any matter within its jurisdiction.

***See Instruction on Reverse Side**

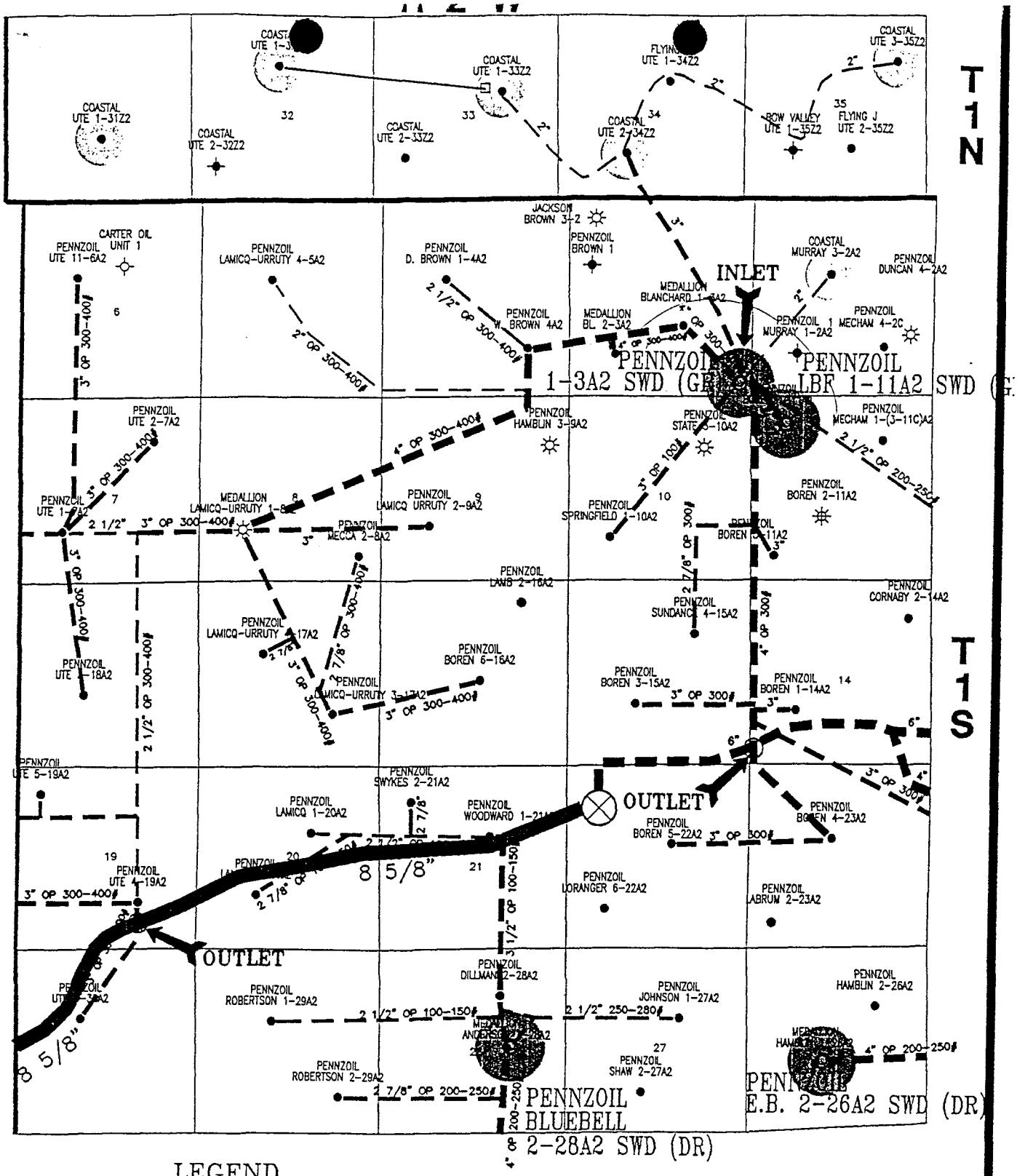

LEGEND

- COASTAL 2" PIPELINE
- COASTAL 2 1/2" PIPELINE
- COASTAL 2 7/8" PIPELINE
- COASTAL 3" PIPELINE
- COASTAL 3 1/2" PIPELINE
- COASTAL 4" PIPELINE
- COASTAL 6" PIPELINE
- COASTAL 8" PIPELINE
- COASTAL 8 5/8" PIPELINE
- COASTAL 10" PIPELINE
- COASTAL PROPOSED
- PENNZOIL 2" PIPELINE
- PENNZOIL 2 1/2" PIPELINE
- PENNZOIL 2 7/8" PIPELINE
- PENNZOIL 3" PIPELINE
- PENNZOIL 3 1/2" PIPELINE
- PENNZOIL 4" PIPELINE
- HBP SWD LINE
- PRODUCTION FLOW LINE INTO BATTERY
- SWD WELLS
- COASTAL OPERATED WELLS

C:\WORK\GEOLOGY\UTAH\ALTAMONT\AFE-11.DWG

Coastal Oil & Gas Corporation
A SUBSIDIARY OF THE COASTAL CORPORATION
The Energy People

ALTAMONT FIELD
DUCHENSE COUNTY UTAH

SWD FLOWLINE
PENNZOIL HOOKUP

M.D. ERNEST | SCALE: 1"=4000' | SEPTEMBER, 1996

Form 3160-5
(August 1999)

UNITED STATES
DEPARTMENT OF THE INTERIOR
BUREAU OF LAND MANAGEMENT

FORM APPROVED
OMB No. 1004-0135
Expires November 30, 2000

SUNDRY NOTICES AND REPORTS ON WELLS

Do not use this form for proposals to drill or reenter an abandoned well. Use Form 3160-3 (APD) for such proposals.

SUBMIT IN TRIPLICATE – Other instructions on reverse side

5. Lease Serial No.
14-20-H62-1703

6. If Indian, Allottee or Tribe Name
UTE INDIAN TRIBE

7. If Unit or CA/Agreement, Name and/or No.
CA 9C-140

1. Type of Well
[X] Oil Well [ ] Gas Well [ ] Other

8. Well Name and No.
UTE TRIBAL 1-33Z2

2. Name of Operator
El Paso Production Oil & Gas Company

9. API Well No.
43-013-30334

3a. Address
P. O. Box 120, Altamont, UT 84001

3b. Phone No. *(include area code)*
(435) 454-3394

10. Field and Pool, or Exploratory Area
ALTAMONT

4. Location of Well *(Footage, Sec., T., R., M., or Survey Description)*
2230' FNL, 1582' FEL
SWNE, Sec. 33, T1N, R2W

11. County or Parish, State
DUCHESNE COUNTY, UTAH

12. CHECK APPROPRIATE BOX(ES) TO INDICATE NATURE OF NOTICE, REPORT, OR OTHER DATA

TYPE OF SUBMISSION	TYPE OF ACTION			
[ ] Notice of Intent	[ ] Acidize	[ ] Deepen	[ ] Production (Start/Resume)	[ ] Water Shut-Off
	[ ] Alter Casing	[ ] Fracture Treat	[ ] Reclamation	[ ] Well Integrity
[X] Subsequent Report	[ ] Casing Repair	[ ] New Construction	[ ] Recomplete	[X] Other Undesirable Event
	[ ] Change Plans	[ ] Plug and Abandon	[ ] Temporarily Abandon	
[ ] Final Abandonment Notice	[ ] Convert to Injection	[ ] Plug Back	[ ] Water Disposal	

13. Describe Proposed or Completed Operations (clearly state all pertinent details, including estimated starting date of any proposed work and approximate duration thereof. If the proposal is to deepen directionally or recomplete horizontally, give subsurface locations and measured and true vertical depths of all pertinent markers and zones. Attach the Bond under which the work will be performed or provide the Bond No. on file with BLM/BIA. Required subsequent reports shall be filed within 30 days following completion of the involved operations. If the operation results in a multiple completion or recompletion in a new interval, a Form 3160-4 shall be filed once testing has been completed. Final Abandonment Notices shall be filed only after all requirements, including reclamation, have been completed, and the operator has determined that the site is ready for final inspection.

THERE WAS EXCESSIVE SURFACE DISTURBANCE WHEN CLEANING UP AFTER THE SALT WATER DISPOSAL LINE LEAK. PLEASE REFER TO THE ATTACHED SURVEY PLAT.
THE AREA WAS RESEEDED NOVEMBER 2004

14. I hereby certify that the foregoing is true and correct

Name *(Printed/Typed)*
Margie Herrmann

Title
Regulatory

Signature
Margie Herrmann

Date
November 30, 2004

THIS SPACE FOR FEDERAL OR STATE USE

Approved by

Title

Date

Conditions of approval, if any, are attached. Approval of this notice does not warrant or certify that the applicant holds legal or equitable title to those rights in the subject lease which would entitle the applicant to conduct operations thereon.

Office

Title 18 U.S.C. Section 1001, make it a crime for any person knowingly and willfully to make to any department or agency of the United States any false, fictitious or fraudulent statements or representations as to any matter within its jurisdiction.

(Instructions on reverse)

RECEIVED
DEC 01 2004
DIV. OF OIL, GAS & MINING

EL PASO PRODUCTION OIL & GAS COMPANY
UTE TRIBAL #1-33Z2
EXCESS SURFACE DISTURBANCE AREA
SECTION 33, T1N, R2W, U.S.B.&M.

ENGINEER'S AFFIDAVIT

STATE OF UTAH)
) SS
COUNTY OF UINTAH)

ROBERT L. KAY, BEING FIRST DULY SWORN DEPOSES AND STATES THAT HE IS THE REGISTERED LAND SURVEYOR, FOR EL PASO PRODUCTION OIL & GAS COMPANY, THAT THESE SURVEYS WERE MADE BY HIM (OR UNDER HIS SUPERVISION): THAT HE HAS EXAMINED THE FIELD NOTES OF THE SURVEYS OF THE AS-BUILT EXCESS SURFACE DISTURBANCE SHOWN ON THIS MAP, THAT THIS MAP WAS PREPARED UNDER HIS DIRECTION FROM SAID FIELD NOTES; AS SHOWN ON THIS MAP IS ACCURATELY REPRESENTED.

No. 161319
ROBERT L. KAY
REGISTERED LAND SURVEYOR
REGISTRATION NO. 161319
STATE OF UTAH

ACKNOWLEDGEMENT

SUBSCRIBED AND SWORN BEFORE ME THIS 10 DAY OF Nov 2004.

MY COMMISSION EXPIRES Aug 17, 2006.

NOTARY PUBLIC
VERNAL, UTAH

APPLICANT'S CERTIFICATE

I,_____, DO HEREBY CERTIFY THAT I AM THE AGENT FOR EL PASO PRODUCTION OIL & GAS COMPANY, HEREINAFTER DESIGNATED THE APPLICANT; THAT ROBERT L. KAY WHO SUBSCRIBED TO THE FOREGOING AFFIDAVIT, IS EMPLOYED BY THE APPLICANT AS A LAND SURVEYOR AND THAT HE WAS DIRECTED BY THE APPLICANT TO SURVEY THE LOCATION OF THIS AS-BUILT EXCESS SURFACE DISTURBANCE AS SHOWN, THAT SAID AS-BUILT EXCESS SURFACE DISTURBANCE IS ACCURATELY REPRESENTED ON THIS MAP; THAT SUCH SURVEY AS REPRESENTED ON THIS MAP HAS BEEN ADOPTED BY THE APPLICANT AS THE DEFINITE LOCATION OF THE RIGHT-OF-WAY THEREBY SHOWN; AND THAT THE MAP HAS BEEN PREPARED TO BE FILED WITH THE SECRETARY OF THE INTERIOR OR HIS DULY AUTHORIZED REPRESENTATIVE AS PART OF THE APPLICATION FOR SAID RIGHT-OF-WAY TO BE GRANTED THE APPLICANT, ITS SUCCESSORS AND ASSIGNS, WITH THE RIGHT TO CONSTRUCT, MAINTAIN, AND REPAIR IMPROVEMENTS, THEREON AND THEREOVER, FOR SUCH PURPOSES, AND WITH THE FURTHER RIGHT IN THE APPLICANT, ITS SUCCESSORS AND ASSIGNS TO TRANSFER THIS RIGHT-OF-WAY BY ASSIGNMENT, GRANT, OR OTHERWISE.

APPLICANT

AGENT

TITLE

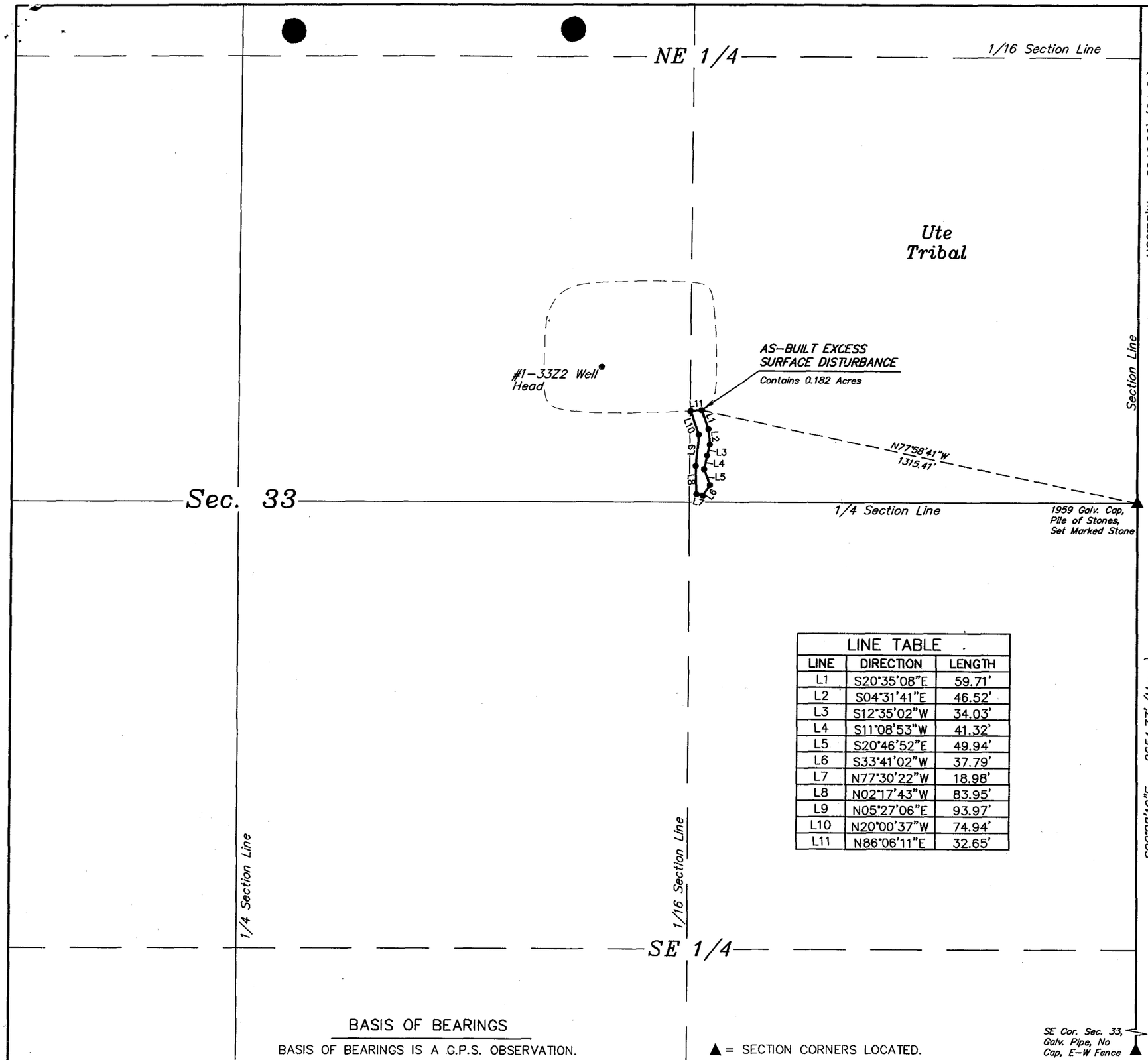

LINE TABLE		
LINE	DIRECTION	LENGTH
L1	S20°35'08"E	59.71'
L2	S04°31'41"E	46.52'
L3	S12°35'02"W	34.03'
L4	S11°08'53"W	41.32'
L5	S20°46'52"E	49.94'
L6	S33°41'02"W	37.79'
L7	N77°30'22"W	18.98'
L8	N02°17'43"W	83.95'
L9	N05°27'06"E	93.97'
L10	N20°00'37"W	74.94'
L11	N86°06'11"E	32.65'

BASIS OF BEARINGS

BASIS OF BEARINGS IS A G.P.S. OBSERVATION.

▲ = SECTION CORNERS LOCATED.

EL PASO PRODUCTION OIL & GAS COMPANY

AS-BUILT
EXCESSS SURFACE DISTRUBANCE ON UTE TRIBAL LANDS

(For UTE TRIBAL #1-33Z2)

LOCATED IN
SECTION 33, T1N, R2W, U.S.B.&M.
DUCHESNE COUNTY, UTAH

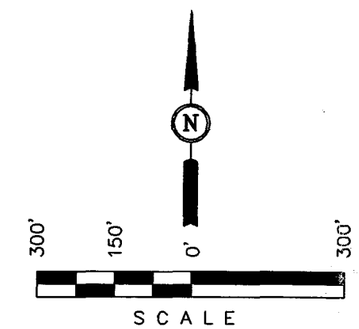

AS-BUILT EXCESS SURFACE DISTURBANCE DESCRIPTION

BEGINNING AT A POINT IN THE SE 1/4 NE 1/4 OF SECTION 33, T1N, R2W, U.S.B.&M. WHICH BEARS N77°58'41"W 1315.41' FROM THE EAST 1/4 CORNER OF SAID SECTION 33, THENCE S20°35'08"E 59.71'; THENCE S04°31'41"E 46.52'; THENCE S12°35'02"W 34.03'; THENCE S11°08'53"W 41.32'; THENCE S20°46'52"E 49.94'; THENCE S33°41'02"W 37.79'; THENCE N77°30'22"W 18.98'; THENCE N02°17'43"W 83.95'; THENCE N05°27'06"E 93.97'; THENCE N20°00'37"W 74.94'; THENCE N86°06'11"E 32.65' TO THE POINT OF BEGINNING. BASIS OF BEARINGS IS A G.P.S. OBSERVATION. CONTAINS 0.182 ACRES MORE OR LESS.

CERTIFICATE

THIS IS TO CERTIFY THAT THE ABOVE PLAT WAS PREPARED FROM FIELD NOTES OF ACTUAL SURVEYS MADE BY ME OR UNDER MY SUPERVISION AND THAT THE SAME ARE TRUE AND CORRECT TO THE BEST OF MY KNOWLEDGE AND BELIEF.

REGISTERED LAND SURVEYOR
REGISTRATION NO. 161319
STATE OF UTAH

REGISTERED LAND SURVEYOR REGISTRATION NO. 161319 STATE OF UTAH

UINTAH ENGINEERING & LAND SURVEYING
85 SOUTH - 200 EAST • (435) 789-1017
VERNAL, UTAH - 84078

SCALE 1" = 300'	DATE 11-02-04
PARTY D.A. T.C. C.G.	REFERENCES G.L.O. PLAT
WEATHER WARM	FILE 43649

Form 3160-5
(August 1999)

UNITED STATES
DEPARTMENT OF THE INTERIOR
BUREAU OF LAND MANAGEMENT

FORM APPROVED
OMB NO. 1004-0135
Expires: November 30, 2000

SUNDRY NOTICES AND REPORTS ON WELLS

Do not use this form for proposals to drill or to re-enter an abandoned well. Use form 3160-3 (APD) for such proposals.

SUBMIT IN TRIPLICATE - Other instructions on reverse side.

5. Lease Serial No.
14-20-H62-1703

6. If Indian, Allottee or Tribe Name
UINTAH & OURAY

7. If Unit or CA/Agreement, Name and/or No.
UTU-58843

1. Type of Well
☒ Oil Well ☐ Gas Well ☐ Other

8. Well Name and No.
UTE TRIBAL 1-33Z2

2. Name of Operator
EL PASO PRODUCTION O&G COMPANY
Contact: CHERYL C CAMERON
E-Mail: cheryl_cameron@hotmail.com

9. API Well No.
43-013-30334

3a. Address
1339 EL SEGUNDO AVE NE
ALBUQUERQUE, NM 87113

3b. Phone No. (include area code)
Ph: 505-344-9380

10. Field and Pool, or Exploratory
ALTAMONT/BLUEBELL

4. Location of Well *(Footage, Sec., T., R., M., or Survey Description)*
Sec 33 T1N R2W SWNE 2230FNL 1582FEL

11. County or Parish, and State
DUCHENE COUNTY, UT

12. CHECK APPROPRIATE BOX(ES) TO INDICATE NATURE OF NOTICE, REPORT, OR OTHER DATA

TYPE OF SUBMISSION	TYPE OF ACTION			
☒ Notice of Intent	☐ Acidize	☐ Deepen	☐ Production (Start/Resume)	☐ Water Shut-Off
☐ Subsequent Report	☐ Alter Casing	☐ Fracture Treat	☐ Reclamation	☐ Well Integrity
☐ Final Abandonment Notice	☐ Casing Repair	☐ New Construction	☒ Recomplete	☐ Other
	☐ Change Plans	☐ Plug and Abandon	☐ Temporarily Abandon	
	☐ Convert to Injection	☐ Plug Back	☐ Water Disposal	

13. Describe Proposed or Completed Operation (clearly state all pertinent details, including estimated starting date of any proposed work and approximate duration thereof. If the proposal is to deepen directionally or recomplete horizontally, give subsurface locations and measured and true vertical depths of all pertinent markers and zones. Attach the Bond under which the work will be performed or provide the Bond No. on file with BLM/BIA. Required subsequent reports shall be filed within 30 days following completion of the involved operations. If the operation results in a multiple completion or recompletion in a new interval, a Form 3160-4 shall be filed once testing has been completed. Final Abandonment Notices shall be filed only after all requirements, including reclamation, have been completed, and the operator has determined that the site is ready for final inspection.)

OPERATOR REQUESTS AUTHORIZATION TO RECOMPLETE THE SUBJECT WELL AS FOLLOWS:

1. PULL PUMP, RODS AND TUBING FROM WELL.
2. SET CIBP W/ 10' OF CMT @ 11,080' TO TEMPORARILY ISOLATE THE L. GREEN RIVER AND WASATCH PERFS F/ 11,089'-16,054'.
3. PERFORATE L. GREEN RIVER F/ 10,104'-11,045' @ 3 SPF (REFER TO ATTACHED PERFORATON SCHEDULE).
4. RUN PACKER ON 3 1/2" WORKSTRING AND SET PACKER @ 10,000'.

RECEIVED
MAR 24 2005
DIV. OF OIL, GAS & MINING

14. I hereby certify that the foregoing is true and correct.
Electronic Submission #55408 verified by the BLM Well Information System
For EL PASO PRODUCTION O&G COMPANY, sent to the Vernal

Name *(Printed/Typed)* CHERYL C CAMERON — Title REGULATORY ANALYST

Signature (Electronic Submission) — Date 03/23/2005

THIS SPACE FOR FEDERAL OR STATE OFFICE USE

Approved By _____ Title Accepted by the Utah Division of Oil, Gas and Mining Date

Conditions of approval, if any, are attached. Approval of this notice does not warrant or certify that the applicant holds legal or equitable title to those rights in the subject lease which would entitle the applicant to conduct operations thereon.

Office 3/28/05 — Federal Approval Of This Action Is Necessary

Title 18 U.S.C. Section 1001 and Title 43 U.S.C. Section 1212, make it a crime for any person knowingly and willfully to make to any department or agency of the United States any false, fictitious or fraudulent statements or representations as to any matter within its jurisdiction.

By: [illegible]

**** OPERATOR-SUBMITTED ** OPERATOR-SUBMITTED ** OPERATOR-SUBMITTED ****

COPY SENT TO OPERATOR
Date: 3-29-05
Initials: CHD

* Cause No. 139-42

Additional data for EC transaction #55408 that would not fit on the form

32. Additional remarks, continued

5. ACIDIZE THE NEW L. GREEN RIVER PERFS 10,104'-11,045' W/ 6500 GAL 15% HCL USING BIO-BALLS AND ROCK SALT F/ DIVERSION.

6. POOH WITH PACKER AND WORKSTRING.

7. RIH W/ MILL ON WORKSTRING AND DRILL OUT CIBP @ 11,080' TO COMMINGLE PERFS WITH NEW PERFS.

8. RUN TUBING, RODS AND PUMP IN WELL.

9. START WELL PUMPING.

Ute 1-33Z2
PERFORATION SCHEDULE - LOWER GREEN RIVER FORMATION
TABLE 1

Cased Hole Reference Log: OWP GR-CBL 4/16/75
Open Hole Reference Log: Schlumberger GR-Density Log 12/27/74 & 2/10/75

CASED	OPEN	CASED	OPEN	CASED	OPEN	CASED	OPEN
10104	10145	10493	10534	10844	10885		
10125	10167	10522	10563	10864	10904		
10131	10173	10534	10574	10868	10908		
10155	10195	10579	10621	10883	10923		
10162	10202	10593	10635	10902	10940		
10185	10225	10605	10645	10915	10954		
10192	10232	10614	10655	10917	10956		
10204	10245	10636	10677	10999	11039		
10213	10253	10642	10683	11012	11054		
10231	10271	10649	10691	11023	11063		
10235	10275	10690	10734	11045	11084		
10247	10287	10703	10747				
10336	10376	10715	10756				
10355	10397	10717	10758				
10391	10431	10730	10771				
10395	10435	10732	10773				
10417	10457	10742	10783				
10421	10461	10771	10810				
10468	10509	10787	10827				
10470	10511	10812	10853				
10489	10530	10842	10883				

Form 3160-5
(April 2004)

UNITED STATES
DEPARTMENT OF THE INTERIOR
BUREAU OF LAND MANAGEMENT

FORM APPROVED
OMB No. 1004-0137
Expires: March 31, 2007

SUNDRY NOTICES AND REPORTS ON WELLS

Do not use this form for proposals to drill or to re-enter an abandoned well. Use Form 3160-3 (APD) for such proposals.

SUBMIT IN TRIPLICATE- Other instructions on reverse side.

5. Lease Serial No.
14-20-H62-1703

6. If Indian, Allottee or Tribe Name
UINTAH & OURAY

7. If Unit or CA/Agreement, Name and/or No.
UTU-58843

8. Well Name and No.
UTE TRIBAL 1-33Z2

9. API Well No.
4301330334

10. Field and Pool, or Exploratory Area
ALTAMONT/BLUEBELL

11. County or Parish, State
DUCHESNE, UT

1. Type of Well
☑ Oil Well ☐ Gas Well ☐ Other

2. Name of Operator EL PASO PRODUCTION OIL AND GAS COMPANY

3a. Address
1339 EL SEGUNDO NE ALBUQUERQUE NM 87113

3b. Phone No. *(include area code)*
505.344.9380

4. Location of Well *(Footage, Sec., T., R., M., or Survey Description)*

SWNE 2230' FNL, 1582' FEL
SEC. 33, T1N, R2W

12. CHECK APPROPRIATE BOX(ES) TO INDICATE NATURE OF NOTICE, REPORT, OR OTHER DATA

TYPE OF SUBMISSION	TYPE OF ACTION			
☐ Notice of Intent	☐ Acidize	☐ Deepen	☐ Production (Start/Resume)	☐ Water Shut-Off
☑ Subsequent Report	☐ Alter Casing	☐ Fracture Treat	☐ Reclamation	☐ Well Integrity
☐ Final Abandonment Notice	☐ Casing Repair	☐ New Construction	☑ Recomplete	☐ Other _____
	☐ Change Plans	☐ Plug and Abandon	☐ Temporarily Abandon	
	☐ Convert to Injection	☐ Plug Back	☐ Water Disposal	

13. Describe Proposed or Completed Operation (clearly state all pertinent details, including estimated starting date of any proposed work and approximate duration thereof. If the proposal is to deepen directionally or recomplete horizontally, give subsurface locations and measured and true vertical depths of all pertinent markers and zones. Attach the Bond under which the work will be performed or provide the Bond No. on file with BLM/BIA. Required subsequent reports shall be filed within 30 days following completion of the involved operations. If the operation results in a multiple completion or recompletion in a new interval, a Form 3160-4 shall be filed once testing has been completed. Final Abandonment Notices shall be filed only after all requirements, including reclamation, have been completed, and the operator has determined that the site is ready for final inspection.)

OPERATOR RECOMPLETED THE SUBJECT WELL 5/11/05 - 5/20/05 AS FOLLOWS:

LD GR/JB. PU CIBP & RIH. SET @ 11,065'. POOH. FILL CSG W/ 336 BBLS 3% KCL WTR. PRESS TEST TO 1000 PSI 15 MIN, OK. TIH W/ 3" CMT BAILER. POOH LD CMT BAILER. RIH W/ 3 1/8" PERF GUN. MADE 6 PERF GUN RUNS, 1 MISS FIRE F/ 10,999' TO 10,104', 50 INTERVALS 150 HOLES. 0 PSI ON WELL. FL @ 800'. FILL CSG W/ 21 BBLS 3% KCL WTR. BREAK DOWN PERFS W/ 30 BBLS 3% KCL WTR. PRESS 1750 PSI, BROKE BACK TO 1450 PSI. ISIP 1300 PSI 5 MIN 1000 PSI 10 MIN 900 PSI 15 MIN 850 PSI.

PMP PRE FLUSH 5036 GAL 3% KCL 4 STAGES OF ACID 2000 GAL 3% KCL, TOTAL ACID PUMPED 10,135 GAL. TOTAL DIC BRINE ROCK SALT 6408 GAL, TOTAL KCL PRE FLUSH & FLUSH 12,185 GAL, TOTAL VOLUME 28,728 GAL FLUID PUMPED. ISIP 1900 PSI 5 MIN 1600 PSI 10 1477 PSI 15 MIN 1394 PSI, CLOSE WELL, RD HALLIBURTON 1150 PSI ON WELL.

FLUSH TBG W/ 60 BBLS KCL WTR. TIH W/ 2 1/2" x 1 3/4" PUMP & RODS. SEAT PUMP. FILL TBG W/ 0 BBLS TESTED TO 1000#, OK. HUNG WEL ON. TURN WELL OVER TO PRODUCTION 5/20/05.

14. I hereby certify that the foregoing is true and correct
Name *(Printed/Typed)*
CHERYL CAMERON

Title REGULATORY ANALYST

Signature Cheryl Cameron

Date 05/26/2005

THIS SPACE FOR FEDERAL OR STATE OFFICE USE

Approved by

Title

Date

Conditions of approval, if any, are attached. Approval of this notice does not warrant or certify that the applicant holds legal or equitable title to those rights in the subject lease which would entitle the applicant to conduct operations thereon.

Office

Title 18 U.S.C. Section 1001 and Title 43 U.S.C. Section 1212, make it a crime for any person knowingly and willfully to make to any department or agency of the United States any false, fictitious or fraudulent statements or representations as to any matter within its jurisdiction.

(Instructions on page 2)

RECEIVED
MAY 27 2005
DIV. OF OIL, GAS & MINING

Form 3160-5
(April 2004)

UNITED STATES
DEPARTMENT OF THE INTERIOR
BUREAU OF LAND MANAGEMENT

FORM APPROVED
OMB No. 1004-0137
Expires: March 31, 2007

SUNDRY NOTICES AND REPORTS ON WELLS

Do not use this form for proposals to drill or to re-enter an abandoned well. Use Form 3160-3 (APD) for such proposals.

SUBMIT IN TRIPLICATE- Other instructions on reverse side.

5. Lease Serial No.
14-20-H62-1703

6. If Indian, Allottee or Tribe Name
UINTAH & OURAY

7. If Unit or CA/Agreement, Name and/or No.
UTU-58843

8. Well Name and No.
UTE TRIBAL 1-33Z2

9. API Well No.
4301330334 43-013-30334

10. Field and Pool, or Exploratory Area
ALTAMONT/BLUEBELL

11. County or Parish, State
DUCHESNE, UT

1. Type of Well
☑ Oil Well ☐ Gas Well ☐ Other

2. Name of Operator EL PASO PRODUCTION OIL AND GAS COMPANY

3a. Address
1339 EL SEGUNDO NE ALBUQUERQUE NM 87113

3b. Phone No. *(include area code)*
505.344.9380

4. Location of Well *(Footage, Sec., T., R., M., or Survey Description)*
SWNE 2230' FNL, 1582 FEL
SEC. 33, T1N, R2W

12. CHECK APPROPRIATE BOX(ES) TO INDICATE NATURE OF NOTICE, REPORT, OR OTHER DATA

TYPE OF SUBMISSION	TYPE OF ACTION			
☐ Notice of Intent	☐ Acidize	☐ Deepen	☐ Production (Start/Resume)	☐ Water Shut-Off
☑ Subsequent Report	☐ Alter Casing	☐ Fracture Treat	☐ Reclamation	☐ Well Integrity
☐ Final Abandonment Notice	☐ Casing Repair	☐ New Construction	☐ Recomplete	☑ Other
	☐ Change Plans	☐ Plug and Abandon	☐ Temporarily Abandon	
	☐ Convert to Injection	☐ Plug Back	☐ Water Disposal	

13. Describe Proposed or Completed Operation (clearly state all pertinent details, including estimated starting date of any proposed work and approximate duration thereof. If the proposal is to deepen directionally or recomplete horizontally, give subsurface locations and measured and true vertical depths of all pertinent markers and zones. Attach the Bond under which the work will be performed or provide the Bond No. on file with BLM/BIA. Required subsequent reports shall be filed within 30 days following completion of the involved operations. If the operation results in a multiple completion or recompletion in a new interval, a Form 3160-4 shall be filed once testing has been completed. Final Abandonment Notices shall be filed only after all requirements, including reclamation, have been completed, and the operator has determined that the site is ready for final inspection.)

OPERATOR FLUSHED THE SUBJECT WELL WITH HOT KCL ON 12/15/06 IN ORDER TO REPAIR ROD AND INCREASE PRODUCTION.
SITP-0#, FLUSHED WITH 60 BBLS HOT KCL. L/D POLISHED ROD. POOH WITH RODS AND PUMP BBLS. FLUSHED AGAIN WITH 60 BBLS KCL. TIH WITH NEW 2-1/2" X 1-3/4" X 28' RHBC PUMP. SPACED OUT. SEAT PUMP. FILLED WITH 10 BBLS KCL. TESTED TO 1000# OK STROKED TO 1000# OK. HUNG WELL ON. RDMO.

14. I hereby certify that the foregoing is true and correct
Name *(Printed/Typed)*
CHERYL CAMERON

Title REGULATORY ANALYST

Signature Cheryl Cameron

Date 01/12/2006

THIS SPACE FOR FEDERAL OR STATE OFFICE USE

Approved by

Title

Date

Conditions of approval, if any, are attached. Approval of this notice does not warrant or certify that the applicant holds legal or equitable title to those rights in the subject lease which would entitle the applicant to conduct operations thereon.

Office

Title 18 U.S.C. Section 1001 and Title 43 U.S.C. Section 1212, make it a crime for any person knowingly and willfully to make to any department or agency of the United States any false, fictitious or fraudulent statements or representations as to any matter within its jurisdiction.

(Instructions on page 2)

RECEIVED
JAN 19 2006
DIV. OF OIL, GAS & MINING

FORM 9

STATE OF UTAH
DEPARTMENT OF NATURAL RESOURCES
DIVISION OF OIL, GAS AND MINING

SUNDRY NOTICES AND REPORTS ON WELLS

Do not use this form for proposals to drill new wells, significantly deepen existing wells below current bottom-hole depth, reenter plugged wells, or to drill horizontal laterals. Use APPLICATION FOR PERMIT TO DRILL form for such proposals.

5. LEASE DESIGNATION AND SERIAL NUMBER: 14-20-H62-1703
6. IF INDIAN, ALLOTTEE OR TRIBE NAME: Ute Indian Tribe
7. UNIT or CA AGREEMENT NAME: 9C140
8. WELL NAME and NUMBER: Ute 1-33Z2
9. API NUMBER: 4301330334
10. FIELD AND POOL, OR WILDCAT: Altamont/Bluebell

1. TYPE OF WELL: OIL WELL ☑ GAS WELL ☐ OTHER _____

2. NAME OF OPERATOR: EL PASO E&P COMPANY, L.P.

3. ADDRESS OF OPERATOR: 1099 18TH ST, SUITE 1900 CITY Denver STATE CO ZIP 80202 PHONE NUMBER: (303) 291-6475

4. LOCATION OF WELL
FOOTAGES AT SURFACE: 2230' FNL, 1582' FWL COUNTY: Duchesne
QTR/QTR, SECTION, TOWNSHIP, RANGE, MERIDIAN: SWNE 33 T1N R2W STATE: UTAH

11. CHECK APPROPRIATE BOXES TO INDICATE NATURE OF NOTICE, REPORT, OR OTHER DATA

TYPE OF SUBMISSION	TYPE OF ACTION		
☐ NOTICE OF INTENT (Submit in Duplicate)	☐ ACIDIZE	☐ DEEPEN	☐ REPERFORATE CURRENT FORMATION
Approximate date work will start:	☐ ALTER CASING	☐ FRACTURE TREAT	☐ SIDETRACK TO REPAIR WELL
	☐ CASING REPAIR	☐ NEW CONSTRUCTION	☐ TEMPORARILY ABANDON
	☐ CHANGE TO PREVIOUS PLANS	☐ OPERATOR CHANGE	☐ TUBING REPAIR
	☐ CHANGE TUBING	☐ PLUG AND ABANDON	☐ VENT OR FLARE
☑ SUBSEQUENT REPORT (Submit Original Form Only)	☐ CHANGE WELL NAME	☐ PLUG BACK	☐ WATER DISPOSAL
Date of work completion:	☐ CHANGE WELL STATUS	☐ PRODUCTION (START/RESUME)	☐ WATER SHUT-OFF
	☐ COMMINGLE PRODUCING FORMATIONS	☐ RECLAMATION OF WELL SITE	☑ OTHER: Surface Meter Commingle
	☐ CONVERT WELL TYPE	☐ RECOMPLETE - DIFFERENT FORMATION	

12. DESCRIBE PROPOSED OR COMPLETED OPERATIONS. Clearly show all pertinent details including dates, depths, volumes, etc.

The referenced well is commingled at surface meter with the Ute 1-32Z2 API# 43-013-30379

NAME (PLEASE PRINT) Rachael Overbey TITLE Engineering Tech

SIGNATURE Rachael Overbey DATE 7/16/2008

(This space for State use only)

RECEIVED
AUG 0 5 2008
DIV. OF OIL, GAS & MINING

(5/2000) (See Instructions on Reverse Side)

FORM 9

STATE OF UTAH
DEPARTMENT OF NATURAL RESOURCES
DIVISION OF OIL, GAS AND MINING

5. LEASE DESIGNATION AND SERIAL NUMBER: 14-20-H62-1703

SUNDRY NOTICES AND REPORTS ON WELLS

6. IF INDIAN, ALLOTTEE OR TRIBE NAME: Ute Indian Tribe

Do not use this form for proposals to drill new wells, significantly deepen existing wells below current bottom-hole depth, reenter plugged wells, or to drill horizontal laterals. Use APPLICATION FOR PERMIT TO DRILL form for such proposals.

7. UNIT or CA AGREEMENT NAME: 9C140

1. TYPE OF WELL: OIL WELL ☑ GAS WELL ☐ OTHER _____

8. WELL NAME and NUMBER: Ute 1-33Z2

2. NAME OF OPERATOR: EL PASO E&P COMPANY, L.P.

9. API NUMBER: 4301330334

3. ADDRESS OF OPERATOR: 1099 18TH ST, SUITE 1900 CITY Denver STATE CO ZIP 80202

PHONE NUMBER: (303) 291-6475

10. FIELD AND POOL, OR WILDCAT: Altamont/Bluebell

4. LOCATION OF WELL

FOOTAGES AT SURFACE: 2230' FNL, 1582' FWL

COUNTY: Duchesne

QTR/QTR, SECTION, TOWNSHIP, RANGE, MERIDIAN: SWNE 33 T1N R2W

STATE: UTAH

11. CHECK APPROPRIATE BOXES TO INDICATE NATURE OF NOTICE, REPORT, OR OTHER DATA

TYPE OF SUBMISSION	TYPE OF ACTION		
☐ NOTICE OF INTENT (Submit in Duplicate)	☐ ACIDIZE	☐ DEEPEN	☐ REPERFORATE CURRENT FORMATION
Approximate date work will start:	☐ ALTER CASING	☐ FRACTURE TREAT	☐ SIDETRACK TO REPAIR WELL
	☐ CASING REPAIR	☐ NEW CONSTRUCTION	☐ TEMPORARILY ABANDON
	☐ CHANGE TO PREVIOUS PLANS	☐ OPERATOR CHANGE	☐ TUBING REPAIR
	☐ CHANGE TUBING	☐ PLUG AND ABANDON	☐ VENT OR FLARE
☑ SUBSEQUENT REPORT (Submit Original Form Only)	☐ CHANGE WELL NAME	☐ PLUG BACK	☐ WATER DISPOSAL
Date of work completion:	☐ CHANGE WELL STATUS	☐ PRODUCTION (START/RESUME)	☐ WATER SHUT-OFF
10/28/2009	☐ COMMINGLE PRODUCING FORMATIONS	☐ RECLAMATION OF WELL SITE	☑ OTHER: commingle/measurement
	☐ CONVERT WELL TYPE	☐ RECOMPLETE - DIFFERENT FORMATION	

12. DESCRIBE PROPOSED OR COMPLETED OPERATIONS. Clearly show all pertinent details including dates, depths, volumes, etc.

THE REFERENCED WELL & UTE 1-32Z2 (4301330379) SHARE THE SAME TREATER AND HAVE COMMON ROYALTY OWNERSHIP. EACH MONTH A 24 HR. WELL TEST IS CONDUCTED FOR OIL, GAS AND WATER PRODUCTION. THE PRODUCTION VOLUMES ARE TAKEN FROM THE ORIFICE METER GAS SALES CHART, OIL METER AND WATER METER. THE WELL NOT BEING TESTED IS SHUT IN DURING THE 24 HR TEST PERIOD.

COPY SENT TO OPERATOR
Date: 12·3·2009
Initials: KS

NAME (PLEASE PRINT) MARIE OKEEFE

TITLE SR REGULATORY ANALYST

SIGNATURE Marie Okeefe

DATE 10/28/2009

(This space for State use only)

APPROVED BY THE STATE OF UTAH DIVISION OF OIL, GAS AND MINING
DATE: 11/30/09
BY: D. K. Duff

Federal Approval Of This Action Is Necessary

(See Instructions on Reverse Side)

(5/2000)

RECEIVED
NOV 09 2009
DIV. OF OIL, GAS & MINING

Division of Oil, Gas and Mining

OPERATOR CHANGE WORKSHEET (for state use only)

ROUTING
CDW

X - Change of Operator (Well Sold) Operator Name Change/Merger

The operator of the well(s) listed below has changed, effective: **6/1/2012**

FROM: (Old Operator):	**TO:** (New Operator):
N3065- El Paso E&P Company, L.P.	N3850- EP Energy E&P Company, L.P.
1001 Louisiana Street	1001 Louisiana Street
Houston, TX. 77002	Houston, TX. 77002
Phone: 1 (713) 997-5038	Phone: 1 (713) 997-5038

CA No. **Unit:** N/A

WELL NAME	SEC	TWN	RNG	API NO	ENTITY NO	LEASE TYPE	WELL TYPE	WELL STATUS
See Attached List								

OPERATOR CHANGES DOCUMENTATION

Enter date after each listed item is completed

1. (R649-8-10) Sundry or legal documentation was received from the **FORMER** operator on: 6/25/2012
2. (R649-8-10) Sundry or legal documentation was received from the **NEW** operator on: 6/25/2012
3. The new company was checked on the **Department of Commerce, Division of Corporations Database on:** 6/27/2012

4a. Is the new operator registered in the State of Utah: _____ Business Number: 2114377-0181

5a. (R649-9-2)Waste Management Plan has been received on: Yes

5b. Inspections of LA PA state/fee well sites complete on: N/A

5c. Reports current for Production/Disposition & Sundries on: 6/25/2012

6. **Federal and Indian Lease Wells:** The BLM and or the BIA has approved the merger, name change, or operator change for all wells listed on Federal or Indian leases on: BLM N/A BIA Not Received
7. **Federal and Indian Units:**
   The BLM or BIA has approved the successor of unit operator for wells listed on: N/A
8. **Federal and Indian Communization Agreements ("CA"):**
   The BLM or BIA has approved the operator for all wells listed within a CA on: N/A
9. **Underground Injection Control ("UIC")** Division has approved UIC Form 5 Transfer of Authority to **Inject,** for the enhanced/secondary recovery unit/project for the water disposal well(s) listed on: Second Oper Chg

DATA ENTRY:

1. Changes entered in the **Oil and Gas Database on:** 6/29/2012
2. Changes have been entered on the **Monthly Operator Change Spread Sheet on:** 6/29/2012
3. Bond information entered in RBDMS on: 6/29/2012
4. Fee/State wells attached to bond in RBDMS on: 6/29/2012
5. Injection Projects to new operator in RBDMS on: 6/29/2012
6. Receipt of Acceptance of Drilling Procedures for APD/New on: N/A

BOND VERIFICATION:

1. Federal well(s) covered by Bond Number: 103601420
2. Indian well(s) covered by Bond Number: 103601473

3a. (R649-3-1) The **NEW** operator of any state/fee well(s) listed covered by Bond Number 400JU0705

3b. The **FORMER** operator has requested a release of liability from their bond on: N/A

LEASE INTEREST OWNER NOTIFICATION:

4. (R649-2-10) The **NEW** operator of the fee wells has been contacted and informed by a letter from the Division of their responsibility to notify all interest owners of this change on: 6/29/2012

COMMENTS:

Disposal and Injections wells will be moved when UIC 5 is received.

FORM 9

STATE OF UTAH
DEPARTMENT OF NATURAL RESOURCES
DIVISION OF OIL, GAS AND MINING

5. LEASE DESIGNATION AND SERIAL NUMBER: Multiple Leases

SUNDRY NOTICES AND REPORTS ON WELLS

6. IF INDIAN, ALLOTTEE OR TRIBE NAME:

Do not use this form for proposals to drill new wells, significantly deepen existing wells below current bottom-hole depth, reenter plugged wells, or to drill horizontal laterals. Use APPLICATION FOR PERMIT TO DRILL form for such proposals.

7. UNIT or CA AGREEMENT NAME:

1. TYPE OF WELL: OIL WELL ☑ GAS WELL ☐ OTHER _____

8. WELL NAME and NUMBER: See Attached

2. NAME OF OPERATOR: El Paso E&P Company, L.P. Attn: Maria Gomez

9. API NUMBER:

3. ADDRESS OF OPERATOR: 1001 Louisiana CITY Houston STATE TX ZIP 77002 PHONE NUMBER: (713) 997-5038

10. FIELD AND POOL, OR WILDCAT: See Attached

4. LOCATION OF WELL

FOOTAGES AT SURFACE: See Attached

COUNTY:

QTR/QTR, SECTION, TOWNSHIP, RANGE, MERIDIAN:

STATE: UTAH

11. CHECK APPROPRIATE BOXES TO INDICATE NATURE OF NOTICE, REPORT, OR OTHER DATA

TYPE OF SUBMISSION	TYPE OF ACTION		
☑ NOTICE OF INTENT (Submit in Duplicate)	☐ ACIDIZE	☐ DEEPEN	☐ REPERFORATE CURRENT FORMATION
Approximate date work will start:	☐ ALTER CASING	☐ FRACTURE TREAT	☐ SIDETRACK TO REPAIR WELL
	☐ CASING REPAIR	☐ NEW CONSTRUCTION	☐ TEMPORARILY ABANDON
	☐ CHANGE TO PREVIOUS PLANS	☐ OPERATOR CHANGE	☐ TUBING REPAIR
	☐ CHANGE TUBING	☐ PLUG AND ABANDON	☐ VENT OR FLARE
☐ SUBSEQUENT REPORT (Submit Original Form Only)	☐ CHANGE WELL NAME	☐ PLUG BACK	☐ WATER DISPOSAL
Date of work completion:	☐ CHANGE WELL STATUS	☐ PRODUCTION (START/RESUME)	☐ WATER SHUT-OFF
	☐ COMMINGLE PRODUCING FORMATIONS	☐ RECLAMATION OF WELL SITE	☑ OTHER: Change of Name/Operator
	☐ CONVERT WELL TYPE	☐ RECOMPLETE - DIFFERENT FORMATION	

12. DESCRIBE PROPOSED OR COMPLETED OPERATIONS. Clearly show all pertinent details including dates, depths, volumes, etc.

Please be advised that El Paso E&P Company, L.P. (current Operator) has changed names to EP Energy E&P Company, L.P. (new Operator) effective June 1, 2012 and that EP Energy E&P Company, L.P. is considered the new operator of the attached well locations.

EP Energy E&P Company, L.P. is responsible under the terms and conditions of the lease(s) for the operations conducted upon leased lands. Bond coverage is provided by the State of Utah Statewide Blanket Bond No. 400JU0705, Bureau of Land Management Nationwide Bond No. 103601420, and Bureau of Indian Affairs Nationwide Bond No. 103601473.

Frank W. Falleri
Vice President
El Paso E&P Company, L.P.

Frank W. Falleri
Sr. Vice President
EP Energy E&P Company, L.P.

NAME (PLEASE PRINT) Maria S. Gomez TITLE Principal Regulatory Analyst

SIGNATURE Maria S. Gomez DATE 6/22/2012

(This space for State use only)

APPROVED 6/29/2012
Rachel Medina
Division of Oil, Gas and Mining
~~Earlene Russell, Engineering Technician~~
Rachel Medina

RECEIVED
JUN 25 2012
DIV. OF OIL, GAS & MINING

(5/2000) (See Instructions on Reverse Side)

El Paso E1 Company, L.P. (N3065) to EP Energy E1 Company, L.P. (N3850) effective 6/1/2012

Well Name	Sec	TWP	RNG	API Number	Entity	Lease Type	Well Type	Well Status	Conf
DWR 3-17C6	17	030S	060W	4301350070		14204621118	OW	APD	C
LAKEWOOD ESTATES 3-33C6	33	030S	060W	4301350127		1420H621328	OW	APD	C
YOUNG 3-15A3	15	010S	030W	4301350122		FEE	OW	APD	C
WHITING 4-1A2	01	010S	020W	4301350424		Fee	OW	APD	C
EL PASO 4-34A4	34	010S	040W	4301350720		Fee	OW	APD	C
YOUNG 2-2B1	02	020S	010W	4304751180		FEE	OW	APD	C
LAKE FORK RANCH 3-10B4	10	020S	040W	4301350712	18221	Fee	OW	DRL	C
LAKE FORK RANCH 4-26B4	26	020S	040W	4301350714	18432	Fee	OW	DRL	C
LAKE FORK RANCH 4-24B4	24	020S	040W	4301350717	18315	Fee	OW	DRL	C
Cook 4-14B3	14	020S	030W	4301351162	18449	Fee	OW	DRL	C
Peterson 4-22C6	22	030S	060W	4301351163	18518	Fee	OW	DRL	C
Lake Fork Ranch 4-14B4	14	020S	040W	4301351240	99999	Fee	OW	DRL	C
Melesco 4-20C6	20	030S	060W	4301351241	99999	Fee	OW	DRL	C
Peck 3-13B5	13	020S	050W	4301351364	99999	Fee	OW	DRL	C
Jensen 2-9C4	09	030S	040W	4301351375	99999	Fee	OW	DRL	C
El Paso 3-5C4	05	030S	040W	4301351376	18563	Fee	OW	DRL	C
ULT 6-31	31	030S	020E	4304740033		FEE	OW	LA	
OBERHANSLY 2-2A1	02	010S	010W	4304740164		FEE	OW	LA	
DWR 3-15C6	15	030S	060W	4301351433		14-20-H62-4724	OW	NEW	C
Lake Fork Ranch 5-23B4	23	020S	040W	4301350739		Fee	OW	NEW	
Duchesne Land 4-10C5	10	030S	050W	4301351262		Fee	OW	NEW	C
Cabinland 4-9B3	09	020S	030W	4301351374		Fee	OW	NEW	C
Layton 4-2B3	02	020S	030W	4301351389		Fee	OW	NEW	C
Golinski 4-24B5	24	020S	050W	4301351404		Fee	OW	NEW	C
Alba 1-21C4	21	030S	040W	4301351460		Fee	OW	NEW	C
Allison 4-19C5	19	030S	050W	4301351466		Fee	OW	NEW	C
Seeley 4-3B3	03	020S	030W	4301351486		Fee	OW	NEW	C
Allen 4-25B5	25	020S	050W	4301351487		Fee	OW	NEW	C
Hewett 2-6C4	06	030S	040W	4301351489		Fee	OW	NEW	C
Young 2-7C4	07	030S	040W	4301351500		Fee	OW	NEW	C
Brighton 3-31A1E	31	010S	010E	4304752471		Fee	OW	NEW	C
Hamaker 3-25A1	25	010S	010W	4304752491		Fee	OW	NEW	C
Bolton 3-29A1E	29	010S	010E	4304752871		Fee	OW	NEW	C
HORROCKS 5-20A1	20	010S	010W	4301334280	17378	FEE	OW	OPS	C
DWR 3-19C6	19	030S	060W	4301334263	17440	14-20-462-1120	OW	P	
DWR 3-22C6	22	030S	060W	4301334106	17298	14-20-462-1131	OW	P	
DWR 3-28C6	28	030S	060W	4301334264	17360	14-20-462-1323	OW	P	
UTE 1-7A2	07	010S	020W	4301330025	5850	14-20-462-811	OW	P	
UTE 2-17C6	17	030S	060W	4301331033	10115	14-20-H62-1118	OW	P	
WLR TRIBAL 2-19C6	19	030S	060W	4301331035	10250	14-20-H62-1120	OW	P	
CEDAR RIM 10-A-15C6	15	030S	060W	4301330615	6420	14-20-H62-1128	OW	P	
CEDAR RIM 12A	28	030S	060W	4301331173	10672	14-20-H62-1323	OW	P	
UTE-FEE 2-33C6	33	030S	060W	4301331123	10365	14-20-H62-1328	OW	P	
TAYLOR 3-34C6	34	030S	060W	4301350200	17572	1420H621329	OW	P	
BAKER UTE 2-34C6	34	030S	060W	4301332634	14590	14-20-H62-1329	OW	P	
UTE 3-35Z2 K	35	010N	020W	4301331133	10483	14-20-H62-1614	OW	P	
UTE 1-32Z2	32	010N	020W	4301330379	1915	14-20-H62-1702	OW	P	
UTE TRIBAL 1-33Z2	33	010N	020W	4301330334	1851	14-20-H62-1703	OW	P	
UTE 2-33Z2	33	010N	020W	4301331111	10451	14-20-H62-1703	OW	P	
UTE TRIBAL 2-34Z2	34	010N	020W	4301331167	10668	14-20-H62-1704	OW	P	
LAKE FORK RANCH 3-13B4	13	020S	040W	4301334262	17439	14-20-H62-1743	OW	P	
UTE 1-28B4	28	020S	040W	4301330242	1796	14-20-H62-1745	OW	P	
UTE 1-34A4	34	010S	040W	4301330076	1585	14-20-H62-1774	OW	P	
UTE 1-36A4	36	010S	040W	4301330069	1580	14-20-H62-1793	OW	P	
UTE 1-1B4	01	020S	040W	4301330129	1700	14-20-H62-1798	OW	P	
UTE 1-31A2	31	010S	020W	4301330401	1925	14-20-H62-1801	OW	P	

UTE 1-25A3	25	010S	030W	4301330370	1920	14-20-H62-1802	OW	P	
UTE 2-25A3	25	010S	030W	4301331343	11361	14-20-H62-1802	OW	P	
UTE 1-26A3	26	010S	030W	4301330348	1890	14-20-H62-1803	OW	P	
UTE 2-26A3	26	010S	030W	4301331340	11349	14-20-H62-1803	OW	P	
UTE TRIBAL 4-35A3	35	010S	030W	4301350274	18009	1420H621804	OW	P	C
UTE 2-35A3	35	010S	030W	4301331292	11222	14-20-H62-1804	OW	P	
UTE 3-35A3	35	010S	030W	4301331365	11454	14-20-H62-1804	OW	P	
UTE 1-6B2	06	020S	020W	4301330349	1895	14-20-H62-1807	OW	P	
UTE 2-6B2	06	020S	020W	4301331140	11190	14-20-H62-1807	OW	P	
UTE TRIBAL 3-6B2	06	020S	020W	4301350273	18008	14-20-H62-1807	OW	P	C
POWELL 4-19A1	19	010S	010W	4301330071	8302	14-20-H62-1847	OW	P	
COLTHARP 1-27Z1	27	010N	010W	4301330151	4700	14-20-H62-1933	OW	P	
UTE 1-8A1E	08	010S	010E	4304730173	1846	14-20-H62-2147	OW	P	
UTE TRIBE 1-31	31	010N	020W	4301330278	4755	14-20-H62-2421	OW	P	
UTE 1-28B6X	28	020S	060W	4301330510	11165	14-20-H62-2492	OW	P	
RINKER 2-21B5	21	020S	050W	4301334166	17299	14-20-H62-2508	OW	P	
MURDOCK 2-34B5	34	020S	050W	4301331132	10456	14-20-H62-2511	OW	P	
UTE 1-35B6	35	020S	060W	4301330507	2335	14-20-H62-2531	OW	P	
UTE TRIBAL 1-17A1E	17	010S	010E	4304730829	860	14-20-H62-2658	OW	P	
UTE 2-17A1E	17	010S	010E	4304737831	16709	14-20-H62-2658	OW	P	
UTE TRIBAL 1-27A1E	27	010S	010E	4304730421	800	14-20-H62-2662	OW	P	
UTE TRIBAL 1-35A1E	35	010S	010E	4304730286	795	14-20-H62-2665	OW	P	
UTE TRIBAL 1-15A1E	15	010S	010E	4304730820	850	14-20-H62-2717	OW	P	
UTE TRIBAL P-3B1E	03	020S	010E	4304730190	4536	14-20-H62-2873	OW	P	
UTE TRIBAL 1-22A1E	22	010S	010E	4304730429	810	14-20-H62-3103	OW	P	
B H UTE 1-35C6	35	030S	060W	4301330419	10705	14-20-H62-3436	OW	P	
BH UTE 2-35C6	35	030S	060W	4301332790	15802	14-20-H62-3436	OW	P	
MCFARLANE 1-4D6	04	040S	060W	4301331074	10325	14-20-H62-3452	OW	P	
UTE TRIBAL 1-11D6	11	040S	060W	4301330482	6415	14-20-H62-3454	OW	P	
CARSON 2-36A1	36	010S	010W	4304731407	737	14-20-H62-3806	OW	P	
UTE 2-14C6	14	030S	060W	4301330775	9133	14-20-H62-3809	OW	P	
DWR 3-14C6	14	030S	060W	4301334003	17092	14-20-H62-3809	OW	P	
THE PERFECT "10" 1-10A1	10	010S	010W	4301330935	9461	14-20-H62-3855	OW	P	
BADGER-SAM H U MONGUS 1-15A1	15	010S	010W	4301330949	9462	14-20-H62-3860	OW	P	
MAXIMILLIAN-UTE 14-1	14	010S	030W	4301330726	8437	14-20-H62-3868	OW	P	
FRED BASSETT 1-22A1	22	010S	010W	4301330781	9460	14-20-H62-3880	OW	P	
UTE TRIBAL 1-30Z1	30	010N	010W	4301330813	9405	14-20-H62-3910	OW	P	
UTE LB 1-13A3	13	010S	030W	4301330894	9402	14-20-H62-3980	OW	P	
UTE 2-22B6	22	020S	060W	4301331444	11641	14-20-H62-4614	OW	P	
UINTA OURAY 1-1A3	01	010S	030W	4301330132	5540	14-20-H62-4664	OW	P	
UTE 1-6D6	06	040S	060W	4301331696	12058	14-20-H62-4752	OW	P	
UTE 2-11D6	11	040S	060W	4301350179	17667	1420H624801	OW	P	
UTE 1-15D6	15	040S	060W	4301330429	10958	14-20-H62-4824	OW	P	
UTE 2-15D6	15	040S	060W	4301334026	17193	14-20-H62-4824	OW	P	
HILL 3-24C6	24	030S	060W	4301350293	18020	1420H624866	OW	P	C
BARCLAY UTE 2-24C6R	24	030S	060W	4301333730	16385	14-20-H62-4866	OW	P	
BROTHERSON 1-2B4	02	020S	040W	4301330062	1570	FEE	OW	P	
BOREN 1-24A2	24	010S	020W	4301330084	5740	FEE	OW	P	
FARNSWORTH 1-13B5	13	020S	050W	4301330092	1610	FEE	OW	P	
BROADHEAD 1-21B6	21	020S	060W	4301330100	1595	FEE	OW	P	
ASAY E J 1-20A1	20	010S	010W	4301330102	8304	FEE	OW	P	
HANSON TRUST 1-5B3	05	020S	030W	4301330109	1635	FEE	OW	P	
ELLSWORTH 1-8B4	08	020S	040W	4301330112	1655	FEE	OW	P	
ELLSWORTH 1-9B4	09	020S	040W	4301330118	1660	FEE	OW	P	
ELLSWORTH 1-17B4	17	020S	040W	4301330126	1695	FEE	OW	P	
CHANDLER 1-5B4	05	020S	040W	4301330140	1685	FEE	OW	P	
HANSON 1-32A3	32	010S	030W	4301330141	1640	FEE	OW	P	
JESSEN 1-17A4	17	010S	040W	4301330173	4725	FEE	OW	P	

JENKINS 1-1B3	01	020S	030W	4301330175	1790	FEE	OW	P	
GOODRICH 1-2B3	02	020S	030W	4301330182	1765	FEE	OW	P	
ELLSWORTH 1-19B4	19	020S	040W	4301330183	1760	FEE	OW	P	
DOYLE 1-10B3	10	020S	030W	4301330187	1810	FEE	OW	P	
JOS. SMITH 1-17C5	17	030S	050W	4301330188	5510	FEE	OW	P	
RUDY 1-11B3	11	020S	030W	4301330204	1820	FEE	OW	P	
CROOK 1-6B4	06	020S	040W	4301330213	1825	FEE	OW	P	
HUNT 1-21B4	21	020S	040W	4301330214	1840	FEE	OW	P	
LAWRENCE 1-30B4	30	020S	040W	4301330220	1845	FEE	OW	P	
YOUNG 1-29B4	29	020S	040W	4301330246	1791	FEE	OW	P	
GRIFFITHS 1-33B4	33	020S	040W	4301330288	4760	FEE	OW	P	
POTTER 1-2B5	02	020S	050W	4301330293	1826	FEE	OW	P	
BROTHERSON 1-26B4	26	020S	040W	4301330336	1856	FEE	OW	P	
SADIE BLANK 1-33Z1	33	010N	010W	4301330355	765	FEE	OW	P	
POTTER 1-24B5	24	020S	050W	4301330356	1730	FEE	OW	P	
WHITEHEAD 1-22A3	22	010S	030W	4301330357	1885	FEE	OW	P	
CHASEL MILLER 2-1A2	01	010S	020W	4301330360	5830	FEE	OW	P	
ELDER 1-13B2	13	020S	020W	4301330366	1905	FEE	OW	P	
BROTHERSON 2-10B4	10	020S	040W	4301330443	1615	FEE	OW	P	
FARNSWORTH 2-7B4	07	020S	040W	4301330470	1935	FEE	OW	P	
TEW 1-15A3	15	010S	030W	4301330529	1945	FEE	OW	P	
UTE FEE 2-20C5	20	030S	050W	4301330550	4527	FEE	OW	P	
HOUSTON 1-34Z1	34	010N	010W	4301330566	885	FEE	OW	P	
GALLOWAY 1-18B1	18	020S	010W	4301330575	2365	FEE	OW	P	
SMITH 1-31B5	31	020S	050W	4301330577	1955	FEE	OW	P	
LEBEAU 1-34A1	34	010S	010W	4301330590	1440	FEE	OW	P	
LINMAR 1-19B2	19	020S	020W	4301330600	9350	FEE	OW	P	
WISSE 1-28Z1	28	010N	010W	4301330609	905	FEE	OW	P	
POWELL 1-21B1	21	020S	010W	4301330621	910	FEE	OW	P	
HANSEN 1-24B3	24	020S	030W	4301330629	2390	FEE	OW	P	
OMAN 2-4B4	04	020S	040W	4301330645	9125	FEE	OW	P	
DYE 1-25Z2	25	010N	020W	4301330659	9111	FEE	OW	P	
H MARTIN 1-21Z1	21	010N	010W	4301330707	925	FEE	OW	P	
JENSEN 1-29Z1	29	010N	010W	4301330725	9110	FEE	OW	P	
CHASEL 2-17A1 V	17	010S	010W	4301330732	9112	FEE	OW	P	
BIRCHELL 1-27A1	27	010S	010W	4301330758	940	FEE	OW	P	
CHRISTENSEN 2-8B3	08	020S	030W	4301330780	9355	FEE	OW	P	
LAMICQ 2-5B2	05	020S	020W	4301330784	2302	FEE	OW	P	
BROTHERSON 2-14B4	14	020S	040W	4301330815	10450	FEE	OW	P	
MURRAY 3-2A2	02	010S	020W	4301330816	9620	FEE	OW	P	
HORROCKS 2-20A1 V	20	010S	010W	4301330833	8301	FEE	OW	P	
BROTHERSON 2-2B4	02	020S	040W	4301330855	8420	FEE	OW	P	
ELLSWORTH 2-8B4	08	020S	040W	4301330898	2418	FEE	OW	P	
OMAN 2-32A4	32	010S	040W	4301330904	10045	FEE	OW	P	
BELCHER 2-33B4	33	020S	040W	4301330907	9865	FEE	OW	P	
BROTHERSON 2-35B5	35	020S	050W	4301330908	9404	FEE	OW	P	
HORROCKS 2-4A1 T	04	010S	010W	4301330954	9855	FEE	OW	P	
JENSEN 2-29A5	29	010S	050W	4301330974	10040	FEE	OW	P	
UTE 2-34A4	34	010S	040W	4301330978	10070	FEE	OW	P	
CHANDLER 2-5B4	05	020S	040W	4301331000	10075	FEE	OW	P	
BABCOCK 2-12B4	12	020S	040W	4301331005	10215	FEE	OW	P	
BADGER MR BOOM BOOM 2-29A1	29	010S	010W	4301331013	9463	FEE	OW	P	
BLEAZARD 2-18B4	18	020S	040W	4301331025	1566	FEE	OW	P	
BROADHEAD 2-32B5	32	020S	050W	4301331036	10216	FEE	OW	P	
ELLSWORTH 2-16B4	16	020S	040W	4301331046	10217	FEE	OW	P	
RUST 3-4B3	04	020S	030W	4301331070	1576	FEE	OW	P	
HANSON TRUST 2-32A3	32	010S	030W	4301331072	1641	FEE	OW	P	
BROTHERSON 2-11B4	11	020S	040W	4301331078	1541	FEE	OW	P	

HANSON TRUST 2-5B3	05	020S	030W	4301331079	1636	FEE	OW	P	
BROTHERSON 2-15B4	15	020S	040W	4301331103	1771	FEE	OW	P	
MONSEN 2-27A3	27	010S	030W	4301331104	1746	FEE	OW	P	
ELLSWORTH 2-19B4	19	020S	040W	4301331105	1761	FEE	OW	P	
HUNT 2-21B4	21	020S	040W	4301331114	1839	FEE	OW	P	
JENKINS 2-1B3	01	020S	030W	4301331117	1792	FEE	OW	P	
POTTER 2-24B5	24	020S	050W	4301331118	1731	FEE	OW	P	
POWELL 2-13A2 K	13	010S	020W	4301331120	8306	FEE	OW	P	
JENKINS 2-12B3	12	020S	030W	4301331121	10459	FEE	OW	P	
MURDOCK 2-26B5	26	020S	050W	4301331124	1531	FEE	OW	P	
BIRCH 3-27B5	27	020S	050W	4301331126	1783	FEE	OW	P	
ROBB 2-29B5	29	020S	050W	4301331130	10454	FEE	OW	P	
LAKE FORK 2-13B4	13	020S	040W	4301331134	10452	FEE	OW	P	
DUNCAN 3-1A2 K	01	010S	020W	4301331135	10484	FEE	OW	P	
HANSON 2-9B3	09	020S	030W	4301331136	10455	FEE	OW	P	
ELLSWORTH 2-9B4	09	020S	040W	4301331138	10460	FEE	OW	P	
UTE 2-31A2	31	010S	020W	4301331139	10458	FEE	OW	P	
POWELL 2-19A1 K	19	010S	010W	4301331149	8303	FEE	OW	P	
CEDAR RIM 8-A	22	030S	060W	4301331171	10666	FEE	OW	P	
POTTER 2-6B4	06	020S	040W	4301331249	11038	FEE	OW	P	
MILES 2-1B5	01	020S	050W	4301331257	11062	FEE	OW	P	
MILES 2-3B3	03	020S	030W	4301331261	11102	FEE	OW	P	
MONSEN 2-22A3	22	010S	030W	4301331265	11098	FEE	OW	P	
WRIGHT 2-13B5	13	020S	050W	4301331267	11115	FEE	OW	P	
TODD 2-21A3	21	010S	030W	4301331296	11268	FEE	OW	P	
WEIKART 2-29B4	29	020S	040W	4301331298	11332	FEE	OW	P	
YOUNG 2-15A3	15	010S	030W	4301331301	11344	FEE	OW	P	
CHRISTENSEN 2-29A4	29	010S	040W	4301331303	11235	FEE	OW	P	
BLEAZARD 2-28B4	28	020S	040W	4301331304	11433	FEE	OW	P	
REARY 2-17A3	17	010S	030W	4301331318	11251	FEE	OW	P	
LAZY K 2-11B3	11	020S	030W	4301331352	11362	FEE	OW	P	
LAZY K 2-14B3	14	020S	030W	4301331354	11452	FEE	OW	P	
MATTHEWS 2-13B2	13	020S	020W	4301331357	11374	FEE	OW	P	
LAKE FORK 3-15B4	15	020S	040W	4301331358	11378	FEE	OW	P	
STEVENSON 3-29A3	29	010S	030W	4301331376	11442	FEE	OW	P	
MEEKS 3-8B3	08	020S	030W	4301331377	11489	FEE	OW	P	
ELLSWORTH 3-20B4	20	020S	040W	4301331389	11488	FEE	OW	P	
DUNCAN 5-13A2	13	010S	020W	4301331516	11776	FEE	OW	P	
OWL 3-17C5	17	030S	050W	4301332112	12476	FEE	OW	P	
BROTHERSON 2-24 B4	24	020S	040W	4301332695	14652	FEE	OW	P	
BODRERO 2-15B3	15	020S	030W	4301332755	14750	FEE	OW	P	
BROTHERSON 2-25B4	25	020S	040W	4301332791	15044	FEE	OW	P	
CABINLAND 2-16B3	16	020S	030W	4301332914	15236	FEE	OW	P	
KATHERINE 3-29B4	29	020S	040W	4301332923	15331	FEE	OW	P	
SHRINERS 2-10C5	10	030S	050W	4301333008	15908	FEE	OW	P	
BROTHERSON 2-26B4	26	020S	040W	4301333139	17047	FEE	OW	P	
MORTENSEN 4-32A2	32	010S	020W	4301333211	15720	FEE	OW	P	
FERRARINI 3-27B4	27	020S	040W	4301333265	15883	FEE	OW	P	
RHOADES 2-25B5	25	020S	050W	4301333467	16046	FEE	OW	P	
CASE 2-31B4	31	020S	040W	4301333548	16225	FEE	OW	P	
ANDERSON-ROWLEY 2-24B3	24	020S	030W	4301333616	16284	FEE	OW	P	
SPROUSE BOWDEN 2-18B1	18	020S	010W	4301333808	16677	FEE	OW	P	
BROTHERSON 3-11B4	11	020S	040W	4301333904	16891	FEE	OW	P	
KOFFORD 2-36B5	36	020S	050W	4301333988	17048	FEE	OW	P	
ALLEN 3-7B4	07	020S	040W	4301334027	17166	FEE	OW	P	
BOURNAKIS 3-18B4	18	020S	040W	4301334091	17264	FEE	OW	P	
MILES 3-12B5	12	020S	050W	4301334110	17316	FEE	OW	P	
OWL and HAWK 2-31B5	31	020S	050W	4301334123	17388	FEE	OW	P	

OWL and HAWK 4-17C5	17	030S	050W	4301334193	17387	FEE	OW	P	
DWR 3-32B5	32	020S	050W	4301334207	17371	FEE	OW	P	
LAKE FORK RANCH 3-22B4	22	020S	040W	4301334261	17409	FEE	OW	P	
HANSON 3-9B3	09	020S	030W	4301350065	17570	FEE	OW	P	
DYE 2-28A1	28	010S	010W	4301350066	17531	FEE	OW	P	
MEEKS 3-32A4	32	010S	040W	4301350069	17605	FEE	OW	P	
HANSON 4-8B3	08	020S	030W	4301350088	17571	FEE	OW	P	C
LAKE FORK RANCH 3-14B4	14	020S	040W	4301350097	17484	FEE	OW	P	
ALLEN 3-9B4	09	020S	040W	4301350123	17656	FEE	OW	P	
HORROCKS 4-20A1	20	010S	010W	4301350155	17916	FEE	OW	P	
HURLEY 2-33A1	33	010S	010W	4301350166	17573	FEE	OW	P	
HUTCHINS/CHIODO 3-20C5	20	030S	050W	4301350190	17541	FEE	OW	P	
ALLEN 3-8B4	08	020S	040W	4301350192	17622	FEE	OW	P	
OWL and HAWK 3-10C5	10	030S	050W	4301350193	17532	FEE	OW	P	
OWL and HAWK 3-19C5	19	030S	050W	4301350201	17508	FEE	OW	P	
EL PASO 4-29B5	29	020S	050W	4301350208	17934	FEE	OW	P	C
DONIHUE 3-20C6	20	030S	060W	4301350270	17762	FEE	OW	P	
HANSON 3-5B3	05	020S	030W	4301350275	17725	FEE	OW	P	C
SPRATT 3-26B5	26	020S	050W	4301350302	17668	FEE	OW	P	
REBEL 3-35B5	35	020S	050W	4301350388	17911	FEE	OW	P	C
FREEMAN 4-16B4	16	020S	040W	4301350438	17935	Fee	OW	P	C
WILSON 3-36B5	36	020S	050W	4301350439	17936	Fee	OW	P	C
EL PASO 3-21B4	21	020S	040W	4301350474	18123	Fee	OW	P	C
IORG 4-12B3	12	020S	030W	4301350487	17981	Fee	OW	P	C
CONOVER 3-3B3	03	020S	030W	4301350526	18122	Fee	OW	P	C
ROWLEY 3-16B4	16	020S	040W	4301350569	18151	Fee	OW	P	C
POTTS 3-14B3	14	020S	030W	4301350570	18366	Fee	OW	P	C
POTTER 4-27B5	27	020S	050W	4301350571	99999	Fee	OW	P	C
EL PASO 4-21B4	21	020S	040W	4301350572	18152	Fee	OW	P	C
LAKE FORK RANCH 3-26B4	26	020S	040W	4301350707	18270	Fee	OW	P	C
LAKE FORK RANCH 3-25B4	25	020S	040W	4301350711	18220	Fee	OW	P	C
LAKE FORK RANCH 4-23B4	23	020S	040W	4301350713	18271	Fee	OW	P	C
LAKE FORK RANCH 4-15B4	15	020S	040W	4301350715	18314	Fee	OW	P	C
LAKE FORK RANCH 3-24B4	24	020S	040W	4301350716	18269	Fee	OW	P	C
GOLINSKI 1-8C4	08	030S	040W	4301350986	18301	Fee	OW	P	C
J ROBERTSON 1-1B1	01	020S	010W	4304730174	5370	FEE	OW	P	
TIMOTHY 1-8B1E	08	020S	010E	4304730215	1910	FEE	OW	P	
MAGDALENE PAPADOPULOS 1-34A1E	34	010S	010E	4304730241	785	FEE	OW	P	
NELSON 1-31A1E	31	010S	010E	4304730671	830	FEE	OW	P	
ROSEMARY LLOYD 1-24A1E	24	010S	010E	4304730707	840	FEE	OW	P	
H D LANDY 1-30A1E	30	010S	010E	4304730790	845	FEE	OW	P	
WALKER 1-14A1E	14	010S	010E	4304730805	855	FEE	OW	P	
BOLTON 2-29A1E	29	010S	010E	4304731112	900	FEE	OW	P	
PRESCOTT 1-35Z1	35	010N	010W	4304731173	1425	FEE	OW	P	
BISEL GURR 11-1	11	010S	010W	4304731213	8438	FEE	OW	P	
UTE TRIBAL 2-22A1E	22	010S	010E	4304731265	915	FEE	OW	P	
L. BOLTON 1-12A1	12	010S	010W	4304731295	920	FEE	OW	P	
FOWLES 1-26A1	26	010S	010W	4304731296	930	FEE	OW	P	
BRADLEY 23-1	23	010S	010W	4304731297	8435	FEE	OW	P	
BASTIAN 1-2A1	02	010S	010W	4304731373	736	FEE	OW	P	
D R LONG 2-19A1E	19	010S	010E	4304731470	9505	FEE	OW	P	
D MOON 1-23Z1	23	010N	010W	4304731479	10310	FEE	OW	P	
O MOON 2-26Z1	26	010N	010W	4304731480	10135	FEE	OW	P	
LILA D 2-25A1	25	010S	010W	4304731797	10790	FEE	OW	P	
LANDY 2-30A1E	30	010S	010E	4304731895	11127	FEE	OW	P	
WINN P2-3B1E	03	020S	010E	4304732321	11428	FEE	OW	P	
BISEL-GURR 2-11A1	11	010S	010W	4304735410	14428	FEE	OW	P	
FLYING J FEE 2-12A1	12	010S	010W	4304739467	16686	FEE	OW	P	

HARVEST FELLOWSHIP CHURCH 2-14B1	14	020S	010W	4304739591	16546	FEE	OW	P	
OBERHANSLY 3-11A1	11	010S	010W	4304739679	17937	FEE	OW	P	
DUNCAN 2-34A1	34	010S	010W	4304739944	17043	FEE	OW	P	
BISEL GURR 4-11A1	11	010S	010W	4304739961	16791	FEE	OW	P	
KILLIAN 3-12A1	12	010S	010W	4304740226	17761	ML 39760	OW	P	
WAINOCO ST 1-14B1	14	020S	010W	4304730818	1420	ML-24306-A	OW	P	
UTAH ST UTE 1-35A1	35	010S	010W	4304730182	5520	ML-25432	OW	P	
STATE 1-19A4	19	010S	040W	4301330322	9118	ML-27912	OW	P	
FEDERAL 2-28E19E	28	050S	190E	4304732849	12117	UTU-0143512	OW	P	
FEDERAL 1-28E19E	28	050S	190E	4304730175	5680	UTU143512	OW	P	
BLANCHARD 1-3A2	03	010S	020W	4301320316	5877	FEE	OW	PA	
W H BLANCHARD 2-3A2	03	010S	020W	4301330008	5775	FEE	OW	PA	
YACK U 1-7A1	07	010S	010W	4301330018	5795	FEE	OW	PA	
JAMES POWELL 3	13	010S	020W	4301330024	8305	FEE	WD	PA	
BASTIAN 1 (3-7D)	07	010S	010W	4301330026	5800	FEE	OW	PA	
LAMICQ-URRUTY 1-8A2	08	010S	020W	4301330036	5975	FEE	OW	PA	
BLEAZARD 1-18B4	18	020S	040W	4301330059	11262	FEE	OW	PA	
OLSEN 1-27A4	27	010S	040W	4301330064	1565	FEE	OW	PA	
EVANS 1-31A4	31	010S	040W	4301330067	5330	FEE	OW	PA	
HAMBLIN 1-26A2	26	010S	020W	4301330083	2305	FEE	OW	PA	
HARTMAN 1-31A3	31	010S	030W	4301330093	10700	FEE	OW	PA	
FARNSWORTH 1-7B4	07	020S	040W	4301330097	5725	FEE	OW	PA	
POWELL 1-33A3	33	010S	030W	4301330105	4526	FEE	OW	PA	
LOTRIDGE GATES 1-3B3	03	020S	030W	4301330117	1625	FEE	OW	PA	
REMINGTON 1-34A3	34	010S	030W	4301330139	1670	FEE	OW	PA	
ANDERSON 1-28A2	28	010S	020W	4301330150	5895	FEE	OW	PA	
RHOADES MOON 1-35B5	35	020S	050W	4301330155	5270	FEE	OW	PA	
JOHN 1-3B2	03	020S	020W	4301330160	5765	FEE	OW	PA	
SMITH 1-6C5	06	030S	050W	4301330163	5385	FEE	OW	PA	
HORROCKS FEE 1-3A1	03	010S	010W	4301330171	5505	FEE	OW	PA	
WARREN 1-32A4	32	010S	040W	4301330174	9139	FEE	OW	PA	
JENSEN FENZEL 1-20C5	20	030S	050W	4301330177	4730	FEE	OW	PA	
MYRIN RANCH 1-13B4	13	020S	040W	4301330180	4524	FEE	OW	PA	
BROTHERSON 1-27B4	27	020S	040W	4301330185	1775	FEE	OW	PA	
JENSEN 1-31A5	31	010S	050W	4301330186	4735	FEE	OW	PA	
ROBERTSON 1-29A2	29	010S	020W	4301330189	4740	FEE	OW	PA	
WINKLER 1-28A3	28	010S	030W	4301330191	5465	FEE	OW	PA	
CHENEY 1-33A2	33	010S	020W	4301330202	1750	FEE	OW	PA	
J LAMICQ STATE 1-6B1	06	020S	010W	4301330210	5730	FEE	OW	PA	
REESE ESTATE 1-10B2	10	020S	020W	4301330215	5700	FEE	OW	PA	
REEDER 1-17B5	17	020S	050W	4301330218	5460	FEE	OW	PA	
ROBERTSON UTE 1-2B2	02	020S	020W	4301330225	1710	FEE	OW	PA	
HATCH 1-5B1	05	020S	010W	4301330226	5470	FEE	OW	PA	
BROTHERSON 1-22B4	22	020S	040W	4301330227	5935	FEE	OW	PA	
ALLRED 1-16A3	16	010S	030W	4301330232	1780	FEE	OW	PA	
BIRCH 1-35A5	35	010S	050W	4301330233	9116	FEE	OW	PA	
MARQUERITE UTE 1-8B2	08	020S	020W	4301330235	9122	FEE	OW	PA	
BUZZI 1-11B2	11	020S	020W	4301330248	6335	FEE	OW	PA	
SHISLER 1-3B1	03	020S	010W	4301330249	5960	FEE	OW	PA	
TEW 1-1B5	01	020S	050W	4301330264	5580	FEE	OW	PA	
EVANS UTE 1-19B3	19	020S	030W	4301330265	1870	FEE	OW	PA	
SHELL 2-27A4	27	010S	040W	4301330266	1776	FEE	WD	PA	
DYE 1-29A1	29	010S	010W	4301330271	99990	FEE	OW	PA	
VODA UTE 1-4C5	04	030S	050W	4301330283	4530	FEE	OW	PA	
BROTHERSON 1-28A4	28	010S	040W	4301330292	9114	FEE	OW	PA	
MEAGHER 1-4B2	04	020S	020W	4301330313	8402	FEE	OW	PA	
NORLING 1-9B1	09	020S	010W	4301330315	1811	FEE	OW	PA	
S. BROADHEAD 1-9C5	09	030S	050W	4301330316	5940	FEE	OW	PA	

TIMOTHY 1-09A3	09	010S	030W	4301330321	10883	FEE	OW	PA	
BARRETT 1-34A5	34	010S	050W	4301330323	9115	FEE	OW	PA	
MEAGHER TRIBAL 1-9B2	09	020S	020W	4301330325	9121	FEE	OW	PA	
PHILLIPS UTE 1-3C5	03	030S	050W	4301330333	1816	FEE	OW	PA	
ELLSWORTH 1-20B4	20	020S	040W	4301330351	6375	FEE	OW	PA	
LAWSON 1-28A1	28	010S	010W	4301330358	5915	FEE	OW	PA	
AMES 1-23A4	23	010S	040W	4301330375	1901	FEE	OW	PA	
HORROCKS 1-6A1	06	010S	010W	4301330390	5675	FEE	OW	PA	
SHRINE HOSPITAL 1-10C5	10	030S	050W	4301330393	5565	FEE	OW	PA	
GOODRICH 1-18B2	18	020S	020W	4301330397	5485	FEE	OW	PA	
SWD POWELL 3	13	010S	020W	4301330478	10708	FEE	WD	PA	
BODRERO 1-15B3	15	020S	030W	4301330565	4534	FEE	OW	PA	
MOON TRIBAL 1-30C4	30	030S	040W	4301330576	2360	FEE	OW	PA	
DUNCAN 2-9B5	09	020S	050W	4301330719	5440	FEE	OW	PA	
FISHER 1-16A4	16	010S	040W	4301330737	2410	FEE	OW	PA	
URRUTY 2-34A2	34	010S	020W	4301330753	9117	FEE	OW	PA	
GOODRICH 1-24A4	24	010S	040W	4301330760	2415	FEE	OW	PA	
CARL SMITH 2-25A4	25	010S	040W	4301330776	9136	FEE	OW	PA	
ANDERSON 1-A30B1	30	020S	010W	4301330783	9137	FEE	OW	PA	
CADILLAC 3-6A1	06	010S	010W	4301330834	6316	FEE	OW	PA	
MCELPRANG 2-31A1	31	010S	010W	4301330836	8439	FEE	OW	PA	
REESE ESTATE 2-10B2	10	020S	020W	4301330837	2417	FEE	OW	PA	
CLARK 2-9A3	09	010S	030W	4301330876	2416	FEE	OW	PA	
JENKINS 3-16A3	16	010S	030W	4301330877	9790	FEE	OW	PA	
CHRISTENSEN 2-26A5	26	010S	050W	4301330905	10710	FEE	OW	PA	
FORD 2-36A5	36	010S	050W	4301330911	9630	FEE	OW	PA	
MORTENSEN 2-32A2	32	010S	020W	4301330929	9486	FEE	OW	PA	
WILKERSON 1-20Z1	20	010N	010W	4301330942	5452	FEE	OW	PA	
UTE TRIBAL 2-4A3 S	04	010S	030W	4301330950	10230	FEE	OW	PA	
OBERHANSLY 2-31Z1	31	010N	010W	4301330970	9262	FEE	OW	PA	
MORRIS 2-7A3	07	010S	030W	4301330977	9725	FEE	OW	PA	
POWELL 2-08A3	08	010S	030W	4301330979	10175	FEE	OW	PA	
FISHER 2-6A3	06	010S	030W	4301330984	10110	FEE	OW	PA	
JACOBSEN 2-12A4	12	010S	040W	4301330985	10480	FEE	OW	PA	
CHENEY 2-33A2	33	010S	020W	4301331042	10313	FEE	OW	PA	
HANSON TRUST 2-29A3	29	010S	030W	4301331043	5306	FEE	OW	PA	
BURTON 2-15B5	15	020S	050W	4301331044	10205	FEE	OW	PA	
EVANS-UTE 2-17B3	17	020S	030W	4301331056	10210	FEE	OW	PA	
ELLSWORTH 2-20B4	20	020S	040W	4301331090	5336	FEE	OW	PA	
REMINGTON 2-34A3	34	010S	030W	4301331091	1902	FEE	OW	PA	
WINKLER 2-28A3	28	010S	030W	4301331109	4519	FEE	OW	PA	
TEW 2-10B5	10	020S	050W	4301331125	1751	FEE	OW	PA	
LINDSAY 2-33A4	33	010S	040W	4301331141	1756	FEE	OW	PA	
FIELDSTED 2-28A4	28	010S	040W	4301331293	10665	FEE	OW	PA	
POWELL 4-13A2	13	010S	020W	4301331336	11177	FEE	GW	PA	
DUMP 2-20A3	20	010S	030W	4301331505	11691	FEE	OW	PA	
SMITH 2X-23C7	23	030S	070W	4301331634	12382	FEE	D	PA	
MORTENSEN 3-32A2	32	010S	020W	4301331872	11928	FEE	OW	PA	
TODD USA ST 1-2B1	02	020S	010W	4304730167	99998	FEE	OW	PA	
STATE 1-7B1E	07	020S	010E	4304730180	5555	FEE	OW	PA	
BACON 1-10B1E	10	020S	010E	4304730881	5550	FEE	OW	PA	
PARIETTE DRAW 28-44	28	040S	010E	4304731408	4537	FEE	OW	PA	
REYNOLDS 2-7B1E	07	020S	010E	4304731840	4960	FEE	OW	PA	
STATE 2-35A2	35	010S	020W	4301330156	4715	ML-22874	OW	PA	
UTAH STATE L B 1-11B1	11	020S	010W	4304730171	5530	ML-23655	OW	PA	
STATE 1-8A3	08	010S	030W	4301330286	5655	ML-24316	OW	PA	
UTAH FEDERAL 1-24B1	24	020S	010W	4304730220	590	ML-26079	OW	PA	
CEDAR RIM 15	34	030S	060W	4301330383	6395	14-20-462-1329	OW	S	

UTE TRIBAL 2-24C7	24	030S	070W	4301331028	10240	14-20-H62-1135	OW	S	
CEDAR RIM 12	28	030S	060W	4301330344	6370	14-20-H62-1323	OW	S	
CEDAR RIM 16	33	030S	060W	4301330363	6390	14-20-H62-1328	OW	S	
SPRING HOLLOW 2-34Z3	34	010N	030W	4301330234	5255	14-20-H62-1480	OW	S	
EVANS UTE 1-17B3	17	020S	030W	4301330274	5335	14-20-H62-1733	OW	S	
UTE JENKS 2-1-B4 G	01	020S	040W	4301331197	10844	14-20-H62-1782	OW	S	
UTE 3-12B3	12	020S	030W	4301331379	11490	14-20-H62-1810	OW	S	
UTE TRIBAL 9-4B1	04	020S	010W	4301330194	5715	14-20-H62-1969	OW	S	
UTE TRIBAL 2-21B6	21	020S	060W	4301331424	11615	14-20-H62-2489	OW	S	
UTE 1-33B6	33	020S	060W	4301330441	1230	14-20-H62-2493	OW	S	
UTE 2-22B5	22	020S	050W	4301331122	10453	14-20-H62-2509	OW	S	
UTE 1-18B1E	18	020S	010E	4304730969	9135	14-20-H62-2864	OW	S	
LAUREN UTE 1-23A3	23	010S	030W	4301330895	9403	14-20-H62-3981	OW	S	
UTE 2-28B6	28	020S	060W	4301331434	11624	14-20-H62-4622	OW	S	
UTE 1-27B6X	27	020S	060W	4301330517	11166	14-20-H62-4631	OW	S	
UTE 2-27B6	27	020S	060W	4301331449	11660	14-20-H62-4631	OW	S	
CEDAR RIM 10-15C6	15	030S	060W	4301330328	6365	14-20-H62-4724	OW	S	
UTE 5-30A2	30	010S	020W	4301330169	5910	14-20-H62-4863	OW	S	
UTE TRIBAL G-1 (1-24C6)	24	030S	060W	4301330298	4533	14-20-H62-4866	OW	S	
UTE TRIBAL FEDERAL 1-30C5	30	030S	050W	4301330475	665	14-20-H62-4876	OW	S	
SMB 1-10A2	10	010S	020W	4301330012	5865	FEE	OW	S	
KENDALL 1-12A2	12	010S	020W	4301330013	5875	FEE	OW	S	
CEDAR RIM 2	20	030S	060W	4301330019	6315	FEE	OW	S	
URRUTY 2-9A2	09	010S	020W	4301330046	5855	FEE	OW	S	
BROTHERSON 1-14B4	14	020S	040W	4301330051	1535	FEE	OW	S	
RUST 1-4B3	04	020S	030W	4301330063	1575	FEE	OW	S	
MONSEN 1-21A3	21	010S	030W	4301330082	1590	FEE	OW	S	
BROTHERSON 1-10B4	10	020S	040W	4301330110	1614	FEE	OW	S	
FARNSWORTH 1-12B5	12	020S	050W	4301330124	1645	FEE	OW	S	
ELLSWORTH 1-16B4	16	020S	040W	4301330192	1735	FEE	OW	S	
MARSHALL 1-20A3	20	010S	030W	4301330193	9340	FEE	OW	S	
CHRISTMAN BLAND 1-31B4	31	020S	040W	4301330198	4745	FEE	OW	S	
ROPER 1-14B3	14	020S	030W	4301330217	1850	FEE	OW	S	
BROTHERSON 1-24B4	24	020S	040W	4301330229	1865	FEE	OW	S	
BROTHERSON 1-33A4	33	010S	040W	4301330272	1680	FEE	OW	S	
BROTHERSON 1-23B4	23	020S	040W	4301330483	8423	FEE	OW	S	
SMITH ALBERT 2-8C5	08	030S	050W	4301330543	5495	FEE	OW	S	
VODA JOSEPHINE 2-19C5	19	030S	050W	4301330553	5650	FEE	OW	S	
HANSEN 1-16B3	16	020S	030W	4301330617	9124	FEE	OW	S	
BROTHERSON 1-25B4	25	020S	040W	4301330668	9126	FEE	OW	S	
POWELL 2-33A3	33	010S	030W	4301330704	2400	FEE	OW	S	
BROWN 2-28B5	28	020S	050W	4301330718	9131	FEE	OW	S	
EULA-UTE 1-16A1	16	010S	010W	4301330782	8443	FEE	OW	S	
JESSEN 1-15A4	15	010S	040W	4301330817	9345	FEE	OW	S	
R HOUSTON 1-22Z1	22	010N	010W	4301330884	936	FEE	OW	S	
FIELDSTED 2-27A4	27	010S	040W	4301330915	9632	FEE	OW	S	
HANSKUTT 2-23B5	23	020S	050W	4301330917	9600	FEE	OW	S	
TIMOTHY 3-18A3	18	010S	030W	4301330940	9633	FEE	OW	S	
BROTHERSON 2-3B4	03	020S	040W	4301331008	10165	FEE	OW	S	
BROTHERSON 2-22B4	22	020S	040W	4301331086	1782	FEE	OW	S	
MILES 2-35A4	35	010S	040W	4301331087	1966	FEE	OW	S	
ELLSWORTH 2-17B4	17	020S	040W	4301331089	1696	FEE	OW	S	
RUST 2-36A4	36	010S	040W	4301331092	1577	FEE	OW	S	
EVANS 2-19B3	19	020S	030W	4301331113	1777	FEE	OW	S	
FARNSWORTH 2-12B5	12	020S	050W	4301331115	1646	FEE	OW	S	
CHRISTENSEN 3-4B4	04	020S	040W	4301331142	10481	FEE	OW	S	
ROBERTSON 2-29A2	29	010S	020W	4301331150	10679	FEE	OW	S	
CEDAR RIM 2A	20	030S	060W	4301331172	10671	FEE	OW	S	

HARTMAN 2-31A3	31	010S	030W	4301331243	11026	FEE	OW	S	
GOODRICH 2-2B3	02	020S	030W	4301331246	11037	FEE	OW	S	
JESSEN 2-21A4	21	010S	040W	4301331256	11061	FEE	OW	S	
BROTHERSON 3-23B4	23	020S	040W	4301331289	11141	FEE	OW	S	
MYRIN RANCH 2-18B3	18	020S	030W	4301331297	11475	FEE	OW	S	
BROTHERSON 2-2B5	02	020S	050W	4301331302	11342	FEE	OW	S	
DASTRUP 2-30A3	30	010S	030W	4301331320	11253	FEE	OW	S	
YOUNG 2-30B4	30	020S	040W	4301331366	11453	FEE	OW	S	
IORG 2-10B3	10	020S	030W	4301331388	11482	FEE	OW	S	
MONSEN 3-27A3	27	010S	030W	4301331401	11686	FEE	OW	S	
HORROCKS 2-5B1E	05	020S	010E	4304732409	11481	FEE	OW	S	
LARSEN 1-25A1	25	010S	010W	4304730552	815	FEE	OW	TA	
DRY GULCH 1-36A1	36	010S	010W	4304730569	820	FEE	OW	TA	