FILE NOTATIONS

Entered In N I D File		Checked by Chief	
Entered On S R Sheet		Copy N I D to Field Office	
Location Map Pinned		Approval Letter	
Card Indexed	✓	Disapproval Letter	
I W R for State or Fee Land			

COMPLETION DATA:

Date Well Completed	7-1-41	Location Inspected	
OW	WW	TA	Bond released State of Fee Land
GW ✓	OS	PA	

LOGS FILED

Driller's Log ✓

Electric Logs (No.) ✓

E | I | E-I | GR | GR-N | Micro

Lat | Mi-L | Sonic | Others

COPY

Form 9-330

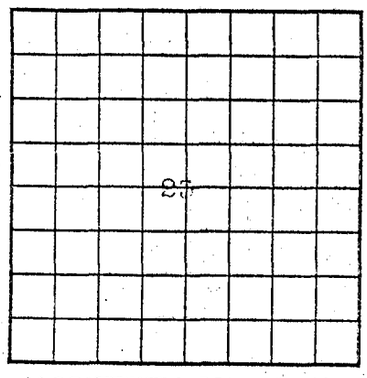

LOCATE WELL CORRECTLY

U. S. LAND OFFICE Salt Lake
SERIAL NUMBER 045049
LEASE OR PERMIT TO PROSPECT L

UNITED STATES
DEPARTMENT OF THE INTERIOR
GEOLOGICAL SURVEY

LOG OF OIL OR GAS WELL

Company Mountain Fuel Supply Co. Address Box 932, Rock Springs, Wyoming

Lessor or Tract Charles L. Sparks Field Clay Basin State Utah

Well No. 1 Sec. 23 T. 3 R. 24 Meridian Salt Lake County Daggett

Location 330 ft. {N. / ~~S.~~} of S. Line and 2310 ft. {Ex / W.} of E. Line of Sec. 23 Elevation 6659 (Derrick floor relative to sea level)

The information given herewith is a complete and correct record of the well and all work done thereon so far as can be determined from all available records.

Signed C. R. Hetzler

Date July 23, 1941 Title Vice President

The summary on this page is for the condition of the well at above date.

Commenced drilling April 29, 1941 Finished drilling July 1, 1941

OIL OR GAS SANDS OR ZONES

(*Denote gas by G*)

No. 1, from 5599 to 5643 (G) No. 4, from to

No. 2, from 5892 to 6042 (G) No. 5, from to

No. 3, from to No. 6, from to

IMPORTANT WATER SANDS

No. 1, from to No. 3, from to

No. 2, from to No. 4, from to

CASING RECORD

Size casing	Weight per foot	Threads per inch	Make	Amount	Kind of shoe	Cut and pulled from	Perforated From—	Perforated To—	Purpose
10-3/4	36#	8		314'6"	Common				Conductor
4-3/4	16#	10		6027'1"	Baker		5894	5906	Production
							5916	5932	
							5954	5977	
2"	4.7#	10		5085	Pef.				Production

MUDDING AND CEMENTING RECORD

Size casing	Where set	Number sacks of cement	Method used	Mud gravity	Amount of mud used
10-3/4	314'6"	225	Halliburton		
4-3/4	6027'1"	500	Halliburton		

PLUGS AND ADAPTERS

Heaving plug—Material Length Depth set

Adapters—Material Size

FOLD | MARK

SHOOTING RECORD

Size	Shell used	Explosive	Quantity	Date	Depth shot	Depth cleaned out

TOOLS USED

Rotary tools were used from 0 feet to 6045 feet, and from ..... feet to ..... feet

Cable tools were used from ..... feet to ..... feet, and from ..... feet to ..... feet

DATES

....., 19..... Put to producing ....., 19.....

The production for the first 24 hours was ..... barrels of fluid of which ..... % was oil; ..... % emulsion; ..... % water; and ..... % sediment. Gravity, °Bé. .....

If gas well, cu. ft. per 24 hours 19,153,000 Gallons gasoline per 1,000 cu. ft. of gas .....

Rock pressure, lbs. per sq. in. 2154

EMPLOYEES

J. Lamkin, Driller W. L. Smith, Driller

G. W. Porter, Driller ....., Driller

FORMATION RECORD

FROM—	TO—	TOTAL FEET	FORMATION
			See Attached Log
			Date actual drilling ceased June 22, 1941
			Total depth drilled 6045'
			Completed depth 6045'
			Date well completed for production July 1, 1941
FROM—	TO—	TOTAL FEET	FORMATION

(OVER) 6—6746

FORMATION RECORD—Continued

16

ROCKY MOUNTAIN DRILLING COMPANY
MOUNTAIN FUEL SUPPLY COMPANY

CASING RECORD FOR C. L. Sparks #1

Sec. 23 Twp. 3 Range 24 Date May 1, 1941

MEASUREMENTS

Surface Elev. 6660' Derrick Floor Elev. 6668'5"

Ht. Rotary above floor 1 ft. 9 in. Ht. Top Kelly Bushings above floor 2 ft. 7 in.

Elev. Top Kelly Bushings 6671 ft. in.

Rig floor to production floor 8 ft. 5 in.

Production floor to bottom of cellar 5 ft. 4 in.

Production floor to top of casing head 3 ft. 4 in.

Number of joints of casing used 16

Casing landed at . . . . . 314 ft. 6 in.

Depth of hole . . . . . 525 ft. in.

Open hole below casing point . . 210 ft. 6 in.

Elevation of casing shoe . . . 6356 ft. 6 in.

CASING SPECIFICATIONS AND CASING EQUIPMENT

Make of casing API Used Lapweld type Wt. per foot 36# lbs.

O. D. of casing 10 3/4 in. I. D. of casing 10 in. Threads per in. 8

Length of threads 3 in. O. D. of couplings 12 in.

Height of couplings 6 in. Kind of casing head None

Height of clamp None in. Thickness of clamp None in.

Length of clamp None in. No. of bolts None

Type casing shoe Plain Type float collar None

Number joints spot welded 4 Welded electric or acetylene electric

Number of faulty joints . . . . . None

CASING TOOLS

Make tongs Dunn Slips Oil Well Elevators Wilson Side Door

Kind of thread dope Red Lead

CEMENT AND CEMENTING EQUIPMENT

Cementing contractor Halliburton

Man in charge Moreland Assistant Chas. Cash

Type equipment used Power Number of wagons 1

Brand cement used Monolith sax

sax

sax

Total number sax 225 Number sax treated Last 50

Kind of treatment used

Kind of plugs used Conventional

Method used in measuring plugs down Halliburton Mesuring Line

TIME OF OPERATIONS

Began rigging up to run casing 4:30 PM - May 1, 1941

Began running casing 5:30 PM - 1

Finished running casing 7:00 PM - 1

Began circulating casing 7:20 PM - 1

Circulated casing . . . . . hrs. 40 min.

Began cementing 8:00 PM - May 1, 1941

Finished cementing 8:30 PM - 1,

Cement to set . . . . . 72 hrs.

PROCEDURE (Should include brief history of operations, difficulties, remedies for same, weather conditions, condition of hole, mud weight, etc.)

Casing ran good. Had cement returns. Weather good. Halliburton circulation system was small for 36# pipe, but the job was OK.

Signed H. L. Roberts

Kelly Co., Mfrs., Salt Lake 48847

Elevation of Kelly Bushings	6671' Ft.
Height of Rotary above floor	1' 9" Ft.
Rig floor Elevation	6668' 5" Ft.
Production Floor or Surface Elevation	6660' Ft.
(B) Top of Collar or Casing to Production Floor	3' 4" Ft.
Production Floor to bottom of Cellar	5' 4" Ft.
(A) Pipe permanently cemented in hole	300'2" Ft.

LANDING POINT

(A) Actual Pipe Cemented	300'2"
Plus:	
Top of Collar to Production Floor (B)	3' 4"
Production to Rig Floor	8'5"
Top of Kelly Bushings to Rig Floor	2' 7"
Equals Landing Point	314'6"
Elevation of Casing Shoe	

ELEVATION OF CASING SHOE

Surface Elevation		6660'
(A) Actual Pipe	300' 2"	
Plus:		
(B) Casing to Production floor	3' 4"	303' 6"
Equals Elevation Casing Shoe		6356' 6"
		6356'6" Ft.

(A) All three of these amounts must be the same, and must agree with your pipe tally. Therefore, your pipe tally can only include the total of the actual pipe cemented—**NOT THE LANDING JOINT,** although the landing joint may be shown **as a matter of information but not included in the total of the pipe tallied.**

(B) All three of these items must be the same.

CASING TALLY

No. Pcs.	Feet	In.	Feet	In.	Feet	In.	Feet	In.	Feet	In.	Feet	In.
Shoe												
1	18	2										
2	21	6										
3	20	3										
4	17	11										
5	17	5										
6	21	4										
7	20	7										
8	20	4										
9	21	4										
10	17	5										
11	20	6										
12	21	4										
13	19	10										
14	20	11										
15	17	8										
16	21	1										
17												
18												
19												
20												
	317	7										

Total No. of Pieces 16; Length 317 ft. 7 in.

Cut off in landing pipe 17 5

300 2

CASING TALLY

No. Pcs.	Feet	In.	Feet	In.	Feet	In.	Feet	In.	Feet	In.	Feet	In.
1												
2												
3												
4												
5												
6												
7												
8												
9												
10												
11												
12												
13												
14												
15												
16												
17												
18												
19												
20												

Total No. of Pieces.....; Length.....ft.....in.

Elevation of Kelly Bushings ..... 6671' Ft.

Height of Rotary above floor ..... 1' 9" Ft.

Rig floor Elevation ..... 6668' 5" Ft.

Production Floor or Surface Elevation ..... 6660' Ft.

(B) Top of Collar or Casing to Production Floor ..... 2' 1" Ft.

Production Floor to bottom of Cellar ..... 5' 4" Ft.

(A) Pipe permanently cemented in hole ..... 6014' Ft.

LANDING POINT

(A) Actual Pipe Cemented	6014'
Plus:	
Top of Collar to Production Floor (B)	2'1"
Production to Rig Floor	8'5"
Top of Kelly Bushings to Rig Floor	2'7"
Equals Landing Point	6027'1"
Elevation of Casing Shoe	

ELEVATION OF CASING SHOE

Surface Elevation		6660'
(A) Actual Pipe	6014	
Plus:		
(B) Casing to Production floor	2'1"	6016'1"
Equals Elevation Casing Shoe		6643'11"
		6643'11" Ft.

(A) All three of these amounts must be the same, and must agree with your pipe tally. Therefore, your pipe tally can only include the total of the actual pipe cemented—**NOT THE LANDING JOINT,** although the landing joint may be shown as a matter of information but not included in the total of the pipe tallied.

(B) All three of these items must be the same.

CASING TALLY

No. Pcs.	Feet	In.	Feet	In.	Feet	In.	Feet	In.	Feet	In.	Feet	In.
hq 1	33	11	31	6	30	2	32	4	31	8	31	0
2	29	4	30	4	31	8	30	9	32	-	31	5
3	26	11	30	3	32	4	32	-	30	5	31	7
4	31	8	31	2	30	-	32	3	30	9	31	7
5	30	11	30	11	32	5	30	9	28	7	30	10
6	30	11	31	8	31	7	30	11	31	2	31	8
7	31	7	30	0	31	8	31	7	31	8	31	5
8	30	10	32	5	30	3	31	8	32	4	30	9
9	31	7	32	4	30	4	30	6	32	4	32	7
10	30	10	32	3	28	1	30	10	31	1	31	8
11	30	5	31	8	32	1	31	3	31	-	31	5
12	30	11	30	8	31	2	32	5	30	10	31	7
13	31	7	30	8	31	7	30	11	30	7	31	4
14	29	1	31	8	30	8	31	8	32	5	24	9
15	30	10	31	7	30	10	32	2	30	10	31	1
16	30	8	31	4	32	3	30	8	31	1	31	2
17	31	5	30	2	31	2	30	5	30	6	31	-
18	31	8	26	1	31	8	31	-	31	9	31	6
19	30	10	32	3	31	7	31	7	31	8	31	7
20	32	2	31	1	32	1	31	1	31	5	31	5
	618	1	620	-	623	7	626	9	624	1	621	4

Total No. of Pieces 120; Length 3733 ft. 10 in.

192 Jts. 4 3/4"
2 Jts. 6 5/8"
194

CASING TALLY

No. Pcs.	Feet	In.	Feet	In.	Feet	In.	Feet	In.	Feet	In.	Feet	In.
1	31	7	31	7	31	7	30	11	6	5/8"		
2	31	5	31	7	30	9	32	2	29	5		
3	31	1	31	1	31	4	31	2	26	3		
4	30	1	30	8	31	1	29	1				
5	27	11	31	7	30	3	31	2				
6	31	7	31	7	31	8	31	8				
7	30	11	31	2	31	-	31	4				
8	27	-	31	1	31	1	28	3				
9	31	7	31	8	31	8	31	4				
10	30	8	31	3	31	1	31	8				
11	27	2	31	-	29	9	31	7				
12	29	-	31	1	31	1	31	5				
13	30	1	31	7	31	-						
14	30	6	31	2	31	4						
15	30	1	31	3	31	3						
16	31	-	31	7	31	9						
17	31	1	31	4	31	3						
18	31	7	31	4	31	1						
19	31	2	31	7	29	10						
20	30	6	31	7	30	2						
	606	-	626	9	620	-	371	9	55	8		

Total No. of Pieces 74; Length 2280 ft. 2 in.

5958'4"
55 8
6014

ROCKY MOUNTAIN DRILLING COMPANY
MOUNTAIN FUEL SUPPLY COMPANY

CASING RECORD FOR C. L. Sparks #1

Sec. 23 Twp. 3 Range 24 Date June 23, 1941

MEASUREMENTS

Surface Elev. 6660' Derrick Floor Elev. 6668'5"

Ht. Rotary above floor 1 ft. 9 in. Ht. Top Kelly Bushings above floor 2 ft. 7 in.

Elev. Top Kelly Bushings 6671 ft. in.

Rig floor to production floor 8 ft. 5 in.

Production floor to bottom of cellar 5 ft. 4 in.

Production floor to top of casing head 2 ft. 1 in.

Number of joints of casing used 194

Casing landed at . . . . . 6027 ft. 1 in.

Depth of hole . . . . . 6045 ft. in.

Open hole below casing point . . 17 ft. 11 in.

Elevation of casing shoe . . . 673 ft. 11 in.

CASING SPECIFICATIONS AND CASING EQUIPMENT

Make of casing Standard type J-55 Wt. per foot 16# & 26# lbs.

O. D. of casing 4 3/4" & 6 5/8" in. I. D. of casing 4" & 6" in. Threads per in. 10

Length of threads 2½" & 3" in. O. D. of couplings 5 9/16" & 7 1/4" in.

Height of couplings 6 5/8" & 8" in. Kind of casing head Bowen Landing Ring

Height of clamp None in. Thickness of clamp None in.

Length of clamp None in. No. of bolts None

Type casing shoe Baker Float Type float collar Baker

Number joints spot welded None Welded electric or acetylene None

Number of faulty joints 1

CASING TOOLS

Make tongs 4½" B-J Rotary Slips 1 piece Mission Elevators B-J

Kind of thread dope Standard Red Lead

CEMENT AND CEMENTING EQUIPMENT

Cementing contractor Halliburton

Man in charge John Shaw Assistant Art Payette

Type equipment used Power Number of wagons 1

Brand cement used Monolith sax

sax

sax

Total number sax 500 Number sax treated Last 100

Kind of treatment used 150# McDuffy's Chemical

Kind of plugs used Rubber

Method used in measuring plugs down Halliburton steel line

TIME OF OPERATIONS

Began rigging up to run casing 1:30 AM - June 23, 1941

Began running casing 3:30 AM - 23,

Finished running casing 11:30 AM - 23,

Began circulating casing 12:01 PM - 23,

Circulated casing . . . . . 1 hrs. 37 min.

Began cementing 1:37 PM June 23, 1941

Finished cementing 2:47 PM 23

Cement to set . . . . . 5 days hrs.

PROCEDURE (Should include brief history of operations, difficulties, remedies for same, weather conditions, condition of hole, mud weight, etc.)

A steel reducing collar was used to connect 6 5/8" and 4 3/4" casing; the two top joints were 6 5/8" OD, 26#, 10 thread, J-55. Weather good. Pipe ran well. Cement good. Had some trouble with circulating head; the head did not enter in casing at first, but same did not leak.

Signed H. L. Roberts

Kelly Co., Mfrs., Salt Lake 48847

THE OHIO OIL COMPANY

SUBSURFACE PRESSURE RECORD

Field Clay Basin County State Utah Date 7/16/41
Farm O. L. Sparks Well No. 1 Location T. R.
Surface Elevation Rotary table elevation
Gravity of Oil Specific Gravity of Gas
Well shut in; Date Time ; Total time shut in before survey Hrs.
Time began survey Time survey completed Total Time Hrs.

WELL DATA

Casing size in.; Depth Landed ft.; Tubing size 2" in.; Depth landed 5984 ft.
Tubing landed ft. off bottom; Torpoed Open end with pin

1. Sand top ft.; bottom ft. Pressure at ft. lbs.
2. Sand top ft.; bottom ft. Pressure at ft. lbs.
3. Sand top ft.; bottom ft. Pressure at ft. lbs.

Calculated top of: Fluid ft.; Oil ft.; Water ft.
Original total depth ft. Present total depth ft.
Pressure at ft., Sea level datum lbs.
Weight of Well Column (lbs.|sq in.|ft.) Gas lbs. Oil lbs. Water lbs.

FLOWING WELL

Pressure (guage) casing lbs., Tubing 2154 lbs.; Trap lbs.
Production (24 hrs.), Oil Bbls.; Water Bbls. or %; Gas mcf.
Gas-Oil Ratio ; Potential of well, Oil Bbls.; Gas mcf.
How flowing, casing Tubing Size Choke Bean Opening
Productivity Index:
lbs. drawdown in hrs. producing at the rate of Bbls. per hour or
Bbls. per day. Productivity index (oil bbls.|day|lb.) .

PUMPING WELL

Working Bbl. make Size in.; Depth ft.; Off Bottom ft.
Length of stroke in. No strokes per minute .

Pressure (guage) casing lbs., Tubing lbs.; Trap lbs.
Production (24 hrs.), Oil Bbls.; Water Bbls. or %; Gas mcf.
Gas-Oil Ratio ; Potential of well, Oil Bbls.; Gas mcf.
Productivity Index:
lbs. drawdown in hrs. producing at the rate of Bbls. per hour or
Bbls. per day. Productivity index (oil bbls.|day|lb.) .

GAS WELL

Pressure (guage) casing lbs., Tubing lbs.; Trap lbs.
Production (24 hrs.) Gas mcf. Gasoline gals.; Water Bbls.
Potential of well, Gas mcf.

Drawdown:
lbs. drawdown in hrs. producing at the rate of mcf. per hour or
mcf. per day.

OBSERVATIONS

DEPTH	TEMP. DEG. F	PRESSURE LBS. | SQ. IN.	REMARKS
Tube	70°	2176	
1000	86	2223	
2000	103	2296	
3000	119	2364	
4000	136	2420	
4500	144	2462	
5000	152	2492	
5500	160	2516	
5750	164	2540	
5990	168	2552	

Survey made by Bottom Hole Pressure Truck No. 3811.
Surveyed by James R. Anderson

Field: Clay Basin Utah County: Daggett Sec. 23 T. 3N. R. 24 E.

Company: Mountain Fuel Supply Co. Farm: C. L. Sparks Well No. 1

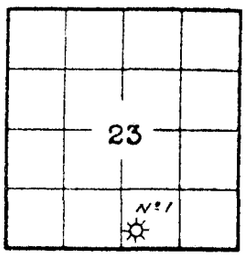

Location: 2310' W of E. Line & 330' N of S Line Elev. 6659'

I.P. Gas 19,153,000 R.P. 2154 # Oil Bbls.

Drilling Commenced: April 29, 1941 Completed: July 1, 1941

Total Depth: 6045'

Remarks: Producing from Dakota sand only - July 1941

Sands: Frontier sand 712,000 cu. ft. Dakota sand 19,153,000 Cu.Ft

Casing Record: 10-3/4" - 36# Casing cemented at 314' 6". 4-3/4" - 16# Casing cemented at 6027' 1". Well tubed with 2" U. E. tubing.

FORMATION RECORD

	From	To
Surface Sand & Gravel	0	37
Gray shale & shells	37	482
Gray shale	482	545
Gray shale & shells	545	790
Shale and lime	790	830
Gray shale	830	844
Shale & shells	844	895
Gray Sandy shale & shells	895	988
Shale & shells	988	1055
Gray shale	1055	1143
Shale & shells	1143	1160
Gray shale	1160	1476
Shale & shells	1476	1540
Gray shale	1540	1638
Shale & shells	1638	1688
Gray shale	1688	2106
Gray shale to sandy gray shale	2106	2184
Sandy gray shale	2184	2239
Gray shale	2239	2420
Gray shale & hard lime shells	2420	2464
Gray shale	2464	2656
Shale with streaks of bentonite	2656	2792
Gray shale with hard shells	2792	2860
Shale	2860	2925
Shale & shells	2925	2977
Shale	2977	3026
Gray shale with streaks of bentonite	3026	3061
Gray shale	3061	3159
Shale & shells	3159	3209
Shale	3209	3270
Gray sandy shale	3270	3383
Shale	3383	3498
Hard gray shale	3498	3529
Shale	3529	3722
Gray sandy shale	3722	3772
Shale	3722	3832
Shale & shells	3832	3909
Gray shale	3909	4365
Shale & shells	4365	4501
Shale	4501	4554
Shale & shells	4554	4644
Shale	4644	4692
Shale & shells	4692	4754
Shale	4754	4844
Shale & shells	4844	4896
Gray shale with streaks of bentonite	4896	4940
Gray shale	4940	4950
Shale & shells	4950	5015
Shale	5015	5203
Shale & shells	5203	5294
Gray shale	5294	5400
Gray shale to sandy gray shale containing some aragonite	5400	5440

FORMATION RECORD

	From	To
Gray shale to sandy gray shale containing biotite and aragonite with occasional streaks of fine-grained gray sand	5440	5525
Gray sandy shale with streaks of hard, sandy lime shells	5525	5538
Sandy gray shale with streaks of hard, fine-grained salt and pepper sand	5538	5575
Sandy gray shale with streaks of hard, fine-grained sand and coal	5575	5590
Sandy gray shale with streaks of coal	5590	5599
TOP FRONTIER SAND		
Hard, fine-grained gray sand	5599	5611
Fine-grained gray sand with thin carbonaceous streaks and containing some glauconite. Core has good odor of gas and shows gas bubbles	5611	5615
Soft, fine-grained gray sand with some bentonite. Shows gas	5615	5616
Fine-grained, gray sand with thin carbonaceous streaks. Cores have good odor of gas	5616	5643
Hard, sandy gray shale	5643	5644
Dark gray to black, carbonaceous shale	5644	5645
Hard, sandy gray shale with thin streaks of carbonaceous shale	5645	5648
Alternating layers of hard, sandy gray shale and carbonaceous shale	5648	5653
Hard, gray sandy shale with occasional streaks of carbonaceous shale. (Tested 5600'-5658', gas 712,000 cu. ft.)	5653	5658
Drilled from 5658' to 5885'		
Gray shale	5658	5668
Sandy gray shale	5668	5700
Gray shale	5700	5730
Gray shale with streaks of bentonite	5730	5741
Shale with hard lime shells	5741	5770
Gray shale with streaks of bentonite	5770	5800
Dark gray siliceous shale with hard shells and some bentonite	5800	5885

2--
Formation Record
C. L. Sparks Well #1
Sec. 23-3-24
Clay Basin Field, Daggett County, Utah

	From	To
Dark gray, siliceous shale containing some pyrite	5885	5890
Gray sandy shale	5890	5892
TOP DAKOTA FORMATION		
Medium-grained, brownish, shaley sand with some pyrite. No showing in core	5892	5896
Soft, brownish, fairly well rounded, medium-grained sand. Core has slight odor of gas at 5899'	5896	5902
Hard, coarse-grained brownish sand	5902	5903
Medium-grained, brownish sand. Core has odor of gas	5903	5904½
Hard, white quartzitic sand with white chert streaks through the sand	5904½	5905
Brownish, fairly well rounded, medium-grained sand containing pyrite. Core has good odor of gas	5905	5910
Light gray bentonitic shale	5910	5913
Hard, very fine-grained gray sand with irregular bedding planes and some pyrite. Poor porosity. No showing in core	5913	5916
Dark gray, thinly laminated shale with streaks of hard, gray sandy shale	5916	5923
Fine-grained, brownish sand with thin carbonaceous streaks. Core has good odor of gas and shows gas bubbles	5923	5927
Medium-grained, brownish, argillaceous sand with thin carbonaceous streaks and inclusions. Core shows good porosity and has good odor of gas	5927	5938
Dark, gray, crumbly shale with some bentonite	5938	5950
Sandy, gray bentonitic shale with occasional streaks of hard, gray quartzitic sand	5950	5955
Very hard, fine-grained quartzitic gray sand with gray shale partings. Core shows a few streaks of saturation of light oil	5955	5960
Soft, fine to medium-grained brownish sand with varied porosity and a few gray shale partings and inclusions, argillaceous in places. Cores have good odor of gas and show a few gas bubbles	5960	5977
Medium-grained gray to dark gray sand with thin carbonaceous streaks Core has odor of gas	5977	5980
Sandy gray shale	5980	5984
Fine-grained, light gray, shaley sand. No showing in core	5984	5987
Alternating layers of light gray bentonitic shale and light gray fine to medium-grained sand. No showing in core	5987	5992
Hard, tight, fine to medium-grained light gray sand. No showing in core	5992	6002
Soft, gray, crumbly bentonitic shale	6002	6004
Resumed drilling at 6012'		
Very hard, quartzitic sand with streaks of gray bentonitic shale containing some pyrite. No showing in core. (Tested 5893.5' - 6016', gas 17,181,504 Cu. Ft.)	6004	6019
Very hard, quartzitic sand with streaks of dark gray shale	6019	6031
Hard, dark gray, sandy shale with streaks of hard, gray quartzitic sand	6031	6042
TOP MORRISON		
Light green shale	6042	6045

Note: Consult Schlumberger Electrical Log for additional information

CL-13
PRAIRIE PUBLISHING CO.—36265

CHEMICAL & GEOLOGICAL LABORATORIES

521 South Center St. P. O. Box 279
Casper, Wyoming

CORE ANALYSIS REPORT

Field CLAY BASIN, UTAH Well No. #1 C. L. Sparks Unit #10
Operator Mountain Fuel Supply Company Location SW¼ SE¼ 23-3N-24E
Formation Depths 5890 - 5977 Lab. No. 1372
Analyzed by Chemical-Geological Laboratories Date April 19, 1948

SAMPLE NO.	DEPTH, FEET	EFFECTIVE POROSITY	PERMEABILITY, MILLIDARCIES H	PERMEABILITY, MILLIDARCIES V	OIL SATURATION PERCENT PORE SPACE	OIL SATURATION BARRELS PER ACRE FEET	WATER SATURATION PERCENT PORE SPACE	WATER SATURATION BARRELS PER ACRE FEET
1	5890-98A 90	✓ 10.2	0.02	27				
2	5890-98B 91	✓ 9.7	0.01	2.26				
3	5890-98C 96	9.4	0.04	33				
4	5890-98D 97	✓ 4.9	0.01	0				
5	5898-5905A 02	✓ 10.9	0.05	0				
6	5915-17A 15	✓ 6.6	0	0.01				
7	5922-27A 24	✓ 16.0	30	86				
8	5927-30A 27	✓ 16.7	90	6.03				
9	5927-30B 29	✓ 20.9	264	35				
10	5930-35A 30	✓ 11.9	166	215				
11	5930-35B 32	✓ 16.0	24	156				
12	5935-38A 35	✓ 18.6	41	67				
13	5955-60A 58	✓ 9.3	0.01	0.03				
14	5960-66A 60	✓ 20.7	806	2268				
15	5960-66B 62	✓ 17.1	1467	248				
16	5960-66C 64	✓ 21.9	1003	725				
17	5960-66D 66	✓ 15.2	42	2.59				
18	5966-72A 67	✓ 13.6	8.24	0.06				
19	5966-72B 69	12.5	0.28	0				
20	5972-77A 72	16.8	129	224				
21	5972-77B 75	20.8	332	0				

SUMMARY

[Arithmetical average, excluding sections with less than one-tenth millidarcy permeability]

DEPTH, FROM	FEET TO	FEET OF SAND	AVERAGE POROSITY	AVERAGE PERMEABILITY H	AVERAGE PERMEABILITY V	AVERAGE OIL SATURATION	AVERAGE WATER SATURATION
5922	5938	16	16.7	103	94		
5960	5966	6	18.7	830	810		

HALLIBURTON DRILL STEM TESTS

SPARKS #1 - MOUNTAIN FUEL SUPPLY COMPANY

Test No.	Bottom of Packer	Bottom of Hole	Length of Anchor	Length of time Tool Open	Results
1	5600	5658	58 ft.	1 hour and 4½ hours	Flow measured every 15 minutes for the first hour tool was open: 315,800 cu. ft. gas, 411,000 cu. ft. gas, 492,000 cu. ft. gas, 539,000 cu. ft. gas, Pulled packer loose from seat and started out of hole when we received orders from Mr. Bowen to reset packer until well had reached it's maximum flow. The packer was set for the second time for 4½ hours and readings were taken at 15 minute intervals as follows: 348,000; 440,000; 492,000; 539,000; 561,000; 582,000; 603,000; 622,000; 641,000; 660,000; 669,000; 678,000; 687,000; 696,000; 696,000; 704,000; 712,000; 712,000. The closed in pressure after 20 minutes was 2100 pounds.
2	5893½	6016	122½ ft.	30 min.	The flow was measured at 5 minute intervals. After the first five minutes the well gauged 16,759,872 cu. ft. of gas. After the second 5 minute interval, the well gauged 17,181,504 cu. ft. of gas. The remainder of the gauges were the same as the well had reached the maximum flow. The closed in pressure after 15 minutes was 2450 pounds.

C-O-P-Y

CORE ANALYSIS REPORT

Field: Clay Basin, Utah

Operator: Mountain Fuel Supply Company

Lease: Salt Lake City 045049

Well No.: 1 (sparks)

Description: SW¼SE¼ Sec. 23, T. 3 N., R. 24 E.

Analysis by J. G. Crawford, Casper, Wyo.

Date: June 26, 1942

Sand: Dakota

Depth Feet	Effective Porosity, Percent	Permeability in Millidarcies Parallel to Bedding Plane	Residual Oil Saturation		Connate Water Saturation	
			Percent of Effective Pore Space	Barrels Per Acre-Foot	Percent of Effective Pore Space	Barrels Per Acre-Foot
5965	20.9	1319				
5973	19.5	279				

cc - Operator

FORMATION RECORD
C. L. SPARKS #1 - MOUNTAIN FUEL SUPPLY COMPANY

Formation	From	To
Shale and shells.	5203	5294
Gray shale.	5294	5400
Gray shale to sandy gray shale containing some aragonite.	5400	5440
Gray shale to sandy gray shale containing biotite and aragonite with occasional streaks of fine grained gray sand.	5440	5525
Gray sandy shale with streaks of hard sandy lime shells.	5525	5538
Sandy gray shale with streaks of hard fine grained salt and pepper sand.	5538	5575
Sandy gray shale with streaks of hard fine grained sand and coal.	5575	5590
Sandy gray shale with streaks of coal.	5590	5599
TOP FRONTIER SAND		
Hard fine grained gray sand.	5599	5611
Started coring at 5601.		
Fine grained gray sand with thin carbonaceous streaks and containing some glauconite. Core has good odor of gas and shows gas bubbles.	5611	5615
Soft fine grained gray sand with some bentonite. Shows gas.	5615	5616
Fine grained gray sand with thin carbonaceous streaks. Cores have good odor of gas.	5616	5643
Hard sandy gray shale.	5643	5644
Dark gray to black carbonaceous shale.	5644	5645
Hard sandy gray shale with thin streaks of carbonaceous shale.	5645	5648
Alternating layers of hard sandy gray shale and carbonaceous shale.	5648	5653
Hard gray sandy shale with occasional streaks of carbonaceous shale. (Tested 5600'-5658', gas 712,000 cu.ft.)	5653	5658
Drilled from 5658' to 5885'.		
Gray shale.	5658	5668
Sandy gray shale.	5668	5700
Gray shale.	5700	5730
Gray shale with streaks of bentonite.	5730	5741
Shale with hard lime shells.	5741	5770
Gray shale with streaks of bentonite.	5770	5800
Dark gray siliceous shale with hard shells and some bentonite.	5800	5885
Resumed coring.		
Dark gray siliceous shale containing some pyrite.	5885	5890
Gray sandy shale.	5890	5892
TOP DAKOTA FORMATION		
Medium grained brownish shaly sand with some pyrite. No showing in core.	5892	5896
Soft brownish, fairly well rounded, medium grained sand. Core has slight odor of gas at 5899'.	5896	5902
Hard coarse grained brownish sand.	5902	5903
Medium grained brownish sand. Core has odor of gas.	5903	5904½
Hard white quartzitic sand with white chert streaks through the sand.	5904½	5905

FORMATION RECORD
C. L. SPARKS #1 - MOUNTAIN FUEL SUPPLY COMPANY

Formation	From :	To
Brownish, fairly well rounded, medium grained sand containing pyrite. Core has good odor of gas.	5905	5910
Light gray bentonitic shale.	5910	5913
Hard very fine grained gray sand with irregular bedding planes and some pyrite. Poor porosity. No showing in core.	5913	5916
Dark gray thinly laminated shale with streaks of hard gray sandy shale.	5916	5923
Fine grained brownish sand with thin carbonaceous streaks. Core has good odor of gas and shows gas bubbles.	5923	5927
Medium grained brownish argillaceous sand with thin carbonaceous streaks and inclusions. Core shows good porosity and has good odor of gas.	5927	5938
Dark gray crumbly shale with some bentonite.	5938	5950
Sandy gray bentonitic shale with occasional streaks of hard gray quartzitic sand.	5950	5955
Very hard fine grained quartzitic gray sand with gray shale partings. Core shows a few streaks of saturation of light oil.	5955	5960
Soft fine to medium grained brownish sand with varied porosity and a few gray shale p rtings and inclusions, argillaceous in places. Cores have good odor of gas and show a few gas bubbles.	5960	5977
Medium grained gray to dark gray sand with thin carbonaceous streaks. Core has odor of gas.	5977	5980
Sandy gray shale.	5980	5984
Fine grained light gray shaly sand. No showing in core.	5984	5987
Alternating layers of light gray bentonitic shale and light gray fine to medium grained sand. No showing in core.	5987	5992
Hard tight fine to medium grained light gray sand. No showing in core,	5992	6002
Soft gray crumbly bentonitic shale.	6002	6004
Resumed drilling at 6012.		
Very hard quartzitic sand with streaks of gray bentonitic shale containing some pyrite. No showing in core. (Tested 5893.5'-6016', gas 17,181,504 cu. ft.)	6004	6019
Very hard quartzitic sand with streaks of dark gray shale.	6019	6031
Hard dark gray sandy shale with streaks of hard gray quartzitic sand.	6031	6042
TOP MORRISON		
Light green shale.	6042	6045

Note: Consult Schlumberger Electrical Log for additional information.

FORMATION RECORD
C. L. SPARKS # 1 - MOUNTAIN FUEL SUPPLY COMPANY

Formation	From :	To
Surface sand and gravel.	0	37
Gray shale and shells.	37	482
Gray shale.	482	545
Gray shale and shells.	545	790
Shale and lime	790	830
Gray shale.	830	844
Shale and shells.	844	895
Gray sandy shale and sand.	895	988
Shale and shells.	988	1055
Gray shale.	1055	1143
Shale and shells.	1143	1160
Gray shale.	1160	1476
Shale and shells.	1476	1540
Gray shale.	1540	1638
Shale and shells.	1638	1688
Gray shale	1688	2106
Gray shale to sandy gray shale.	2106	2184
Sandy gray shale.	2184	2239
Gray shale.	2239	2420
Gray shale and hard lime shells.	2420	2464
Gray shale.	2464	2656
Shale with streaks of bentonite.	2656	2792
Gray shale with hard shells.	2792	2860
Shale.	2860	2925
Shale and shells.	2925	2977
Shale.	2977	3026
Gray shale with streaks of bentonite.	3026	3061
Gray shale.	3061	3159
Shale and shells.	3159	3209
Shale.	3209	3270
Gray sandy shale.	3270	3383
Shale.	3383	3498
Hard gray shale.	3498	3529
Shale.	3529	3722
Gray sandy shale.	3722	3772
Shale.	3722	3832
Shale and shells.	3832	3909
Gray shale.	3909	4365
Shale and shells	4365	4501
Shale	4501	4554
Shale and shells	4554	4644
Shale	4644	4692
Shale and shells.	4692	4754
Shale.	4754	4844
Shale and shells.	4844	4896
Gray shale with streaks of bentonite.	4896	4940
Gray shale.	4940	4950
Shale and shells.	4950	5015
Shale.	5015	5203

Form No. 557

Salt Lake
045049

WELL RECORD

Utah

Well No. 1 Farm Charles L. Sparks Acres 480 Lease No. #1176

State Utah County Daggett Pool Clay Basin

Sec. 23 Survey Town 3 North Range 24 East

Location 2310 Ft. from East Line 330 Ft. from South Line Sec.

23

NE/

INITIAL PRODUCTION

Oil: 1st 24 Bls. 2nd 24 Bls. Flowing or Pumping

Gas: 19,153,000 Feet, Estimated Pressure 2154 Lbs.

Non-productive: (dry) or (water)

Date began producing

SANDS

Name		Frontier		Dakota	
Depth to top		5599		~~5643~~ 5892	
" " botom		~~5893~~ 5643		6042	
Thickness		~~293~~		~~399~~	
Oil: Producing from					
to					
Showing or dry					
Gas: Producing from				~~5643~~ 5892	
to				5980	
Showing or dry					
Water: from					
to					

RIG

Began 3/30/41 Comp. 4/12/ 41 Style 122' LCM Cont'r Frix Rigging by R.M.Drlg. Days at

DRILLING, ETC

Began 4/29/41 Comp. 7/1/41 Cont'r. Rocky Mtn. Drlg. Co. Contract: Briefly $7.20 per ft. for drilling; $10.42 per hour for coring and day work.

Paid Drilling 6047' ft. at 7.20 Amt. $43,538.40 ft. at Amt.

" Cleaning out days at Amt. Labor ft. at Amt.

" Swabbing days at Amt. Total depth drilled 6045 Plugged to

Day Work - $3,239.84

FUEL

KIND	FROM	QUANTITY	PRICE	AMOUNT
Gas	Clay Basin Unit	27567	.04	1102.68

WATER

FROM	QUANTITY	PRICE	AMOUNT
Clay Basin			

TORPEDOES

By Date	Q'rts	from	to

PIPE IN WELL—COMPLETED

Size	10-3/4			6-5/8	4-3/4			2-1/2			2"
Weight	36#			26#	16#			6.5#			4.7#
Joints	15			2	192			1			188
Feet	303'0"			56'2"	5993'3"			29'4"			5980'4"

Liner bottom Packers set at Wire Line

ACCOUNTING FOR PIPE

DEBITS						CREDITS					
MON.	TRF.	WHSE. OR FOREMAN	SIZE	WT.	FEET	MON.	TRF.	WHSE. OR FOREMAN	SIZE	WT.	FEET
		See Attached Sheet									

CORING RECORD

SPARKS #1 - MOUNTAIN FUEL SUPPLY COMPANY

Core No.	From	To	Feet Cut	Feet Recovered
1	5601	5611	10	1
2	5611	5616	5	5
3	5616	5621	5	5
4	5621	5626	5	5
5	5626	5631	5	4
6	5631	5635	4	4
7	5635	5637	2	2
8	5637	5642	5	3
9	5642	5645	3	3
10	5645	5648	3	2'8"
11	5648	5651	3	3
12	5651	5653	2	2
13	5653	5656	3	3
14	5656	5658	2	2
15	5885	5890	5	5
16	5890	5898	8	8
17	5898	5905	7	6
18	5905	5910	5	3
19	5910	5912	2	2
20	5912	5915	3	3
21	5915	5917	2	2
22	5917	5922	5	1
23	5922	5927	5	1'6"
24	5927	5930	3	3
25	5930	5935	5	5
26	5935	5939	4	4
27	5939	5942	3	3
28	5942	5944	2	2
29	5944	5947	3	3
30	5947	5950	3	3
31	5950	5952	2	2
32	5952	5955	3	3
33	5955	5960	5	4
34	5960	5966	6	6
35	5966	5972	6	6
36	5972	5977	5	3
37	5977	5980	3	3
38	5980	5984	4	1
39	5984	5987	3	3
40	5987	5992	5	4
41	5992	5998	6	6
42	5998	6001	3	3
43	6001	6004	3	3
44	6004	6006	2	1
45	6006	6008	2	2
46	6008	6010	2	2
47	6010	6011	1	1
48	6011	6012	1	6"

PIPE SIDETRACKED IN HOLE

Size									
Weight									
Joints									
Feet									
Depth									

TOOLS LOST IN HOLE

DESCRIPTION	DEPTH.	DAYS FISHING

MISC. INFORMATION

APP. D.K. Bowen

" D.E. Fetzler

EXAM.

LOG

DESCRIPTION	DEPTH				DESCRIPTION	DEPTH			
	FROM	TO	Thickness	CAS'G		FROM	TO	Thickness	CAS'G

C. L. SPARKS

Sec. 23-3-24
Well No. 1

CASING RECORD

10-3/4" - 36# - 8-Thread API Lapweld Casing:

15 joints, 303' 0" gross, 300' 2" net, landed at 314' 6" - 14' 4" below the top of the Kelly bushings. Cemented May 1, 1941, by Halliburton Oil Well Cementing Company with 225 sacks of Monolith cement, last 50 sacks treated. No casing clamps were used, as the pipe was cemented from bottom to top. Cement returns were received in the cellar. A common casing shoe was used and spot welded to the bottom joint. The first 4 joints were spot welded above and below collars.

4-3/4" - 16# - 10-Thread & 6-5/8" - 26# 10-Thread Casing:

A production string consisting of the following was set and cemented in this well June 23, 1941:

192 Jts.	5993' 3" gross,	5958' 4" net	of	4-3/4" - 16# - 10Thd.Csg.
2 "	56' 2" "	55' 8" "	"	6-5/8" - 26# - 10Thd.Csg.
194 Jts.	6049' 5" gross,	6014' 0" net		

Casing landed on Bowen landing ring at 6027' 1" - 13' 1" below the top of the Kelly bushings.

A Baker float shoe was used on the bottom of the first joint and a Baker float collar was used on the top of the first joint. Neither casing nor shoe was welded. A Steel reducing coupling was used to connect the 6-5/8" and 4-3/4" casing. The casing was cemented by Halliburton Oil Well Cementing Company with 500 sacks of Monolith cement, last 100 sacks treated. This casing was perforated as follows:

5894' to 5906' 6"	24 holes
5916' to 5932' 6"	34 holes
5954' to 5977' 6"	48 holes
	106 holes.

2" - 4.7# and 2½" - 6.5# U.E.Tubing:

A tubing string consisting of the following was run in the well July 1, 1941:

188 Jts.	5980' 4" gross,	5949' 9" net	of	2" - 4.7# 10-Thd. UE Tubing
1 "	29' 4" "	29' 2" "	"	2½" - 6.5# " " "
189 Jts.	6009' 8" gross,	5978'11" net		

of tubing landed on Hetzler tubing head at 5984' 10" - 5' 11" below the top of the Kelly bushings. Tubing was perforated as follows:

5946' 6" to 5957' 6"
5980' 1" to 5984'10".

ACCOUNTING FOR PIPE

C. L. Sparks Well #1
Clay Basin Field
Daggett County, Utah

Date	Trfr.	From or To	Debits	Credits	Balance
10-3/4" - 36# Lapweld Casing:					
4/25/41	102633	Rock Springs Warehouse	320' 7"		
5/12/41	90643	M. F. Machine Shop		5' 1"	
6/ 4/41	90660	M. F. Machine Shop		11' 3"	
6/ 4/41	90661	To Material Consumed		1' 3"	303' 0"
6-5/8" - 26# - 10-Thread Casing:					
6/25/41	102910	R. S. Warehouse	29' 9"		
6/25/41	97761	Clay Basin Warehouse	26' 5"		56' 2"
4-3/4" - 16# - 10-Thread Seamless Casing:					
6/25/41	97761	Clay Basin Warehouse	5935' 7"		
"	"	Clay Basin Warehouse	57' 8"		5993' 3"
2-1/2" - 6.5# Upset Tubing:					
6/11/41	97765	Clay Basin Warehouse	30' 7"		
6/11/41	90667	Mtn. Fuel Machine Shop		1' 3"	29' 4"
2" - 4.7# Upset Tubing:					
6/11/41	97765	Clay Basin Warehouse	5980' 4"		5980' 4"

13

CORING RECORD

C. L. SPARKS, SEC. 23-3-24 WELL NO. 1

Core No.:	From	To	Feet Cut	Feet Covered
1	5601	5611	10	1
2	5611	5616	5	5
3	5616	5621	5	5
4	5621	5626	5	5
5	5626	5631	5	4
6	5631	5635	4	4
7	5635	5637	2	2
8	5637	5642	5	3
9	5642	5645	3	3
10	5645	5648	3	2'8"
11	5648	5651	3	3
12	5651	5653	2	2
13	5653	5656	3	3
14	5656	5658	2	2
15	5885	5890	5	5
16	5890	5898	8	8
17	5898	5905	7	6
18	5905	5910	5	3
19	5910	5912	2	2
20	5912	5915	3	3
21	5915	5917	2	2
22	5917	5922	5	1
23	5922	5927	5	1'6"
24	5927	5930	3	3
25	5930	5935	5	5
26	5935	5939	4	4
27	5939	5942	3	3
28	5942	5944	2	2
29	5944	5947	3	3
30	5947	5950	3	3
31	5950	5952	2	2
32	5952	5955	3	3
33	5955	5960	5	4
34	5960	5966	6	6
35	5966	5972	6	6
36	5972	5977	5	3
37	5977	5980	3	3
38	5980	5984	4	1
39	5984	5987	3	3
40	5987	5992	5	4
41	5992	5998	6	6
42	5998	6001	3	3
43	6001	6004	3	3
44	6004	6006	2	1
45	6006	6008	2	2
46	6008	6010	2	2
47	6010	6011	1	1
48	6011	6012	1	6"

14

STATE OF UTAH
NATURAL RESOURCES
Oil, Gas & Mining

Norman H. Bangerter, Governor
Dee C. Hansen, Executive Director
Dianne R. Nielson, Ph.D., Division Director

355 W. North Temple • 3 Triad Center • Suite 350 • Salt Lake City, UT 84180-1203 • 801-538-5340

April 15, 1985

Bureau of Land Management
170 South 500 East
Vernal, Utah 84078

Attention: Benna

Gentlemen:

Re: Clay Basin Units #2, #3, #4, #5, #6, #10, and #11

Benna, we are unable to reach a decision regarding the status of the above mentioned wells. Wexpro states they are Gas Storage Wells and that they sent sundry's to that affect.

Reviewing our files, I am unable to locate any sundry's or any other information indicating that these are Gas Storage Wells. Perhaps Wexpro sent copies to you and not to us. Can you shed any light on the subject?

Any help you could provide us would be greatly appreciated.

Sincerely,

Vicky Carney
Office Specialist, Production

cc: Dianne R. Nielson
Ronald J. Firth
Norman C. Stout
File

0031-53

United States Department of the Interior

BUREAU OF LAND MANAGEMENT
VERNAL DISTRICT OFFICE
170 South 500 East
Vernal, Utah 84078

IN REPLY
REFER TO:
3100
Clay Basin Unit

April 30, 1985

Mountain Fuel Supply Co.
P.O. Box 11368
Salt Lake City, UT 84139

Re: Well No. 2
Sec. 21, T3N, R24E, SLB&M
Lease SLC-045051-A

Well No. 3
Sec. 16, T3N, R24E, SLB&M
State Lease

Well No. 4
Sec. 27, T3N, R24E, SLB&M
Lease SLC-045053-A

Well No. 5
Sec. 20, T3N, R24E, SLB&M
Fee Lease

Well No. 6
Sec. 23, T3N, R24E, SLB&M
Lease SLC-045051-B

Well No. 10
Sec. 23, T3N, R24E, SLB&M
Lease SLC-045049

Well No. 11
Sec. 22, T3N, R24E, SLB&M
Lease SLC-045051-A

All in Clay Basin Unit.
All in Daggett County, Utah.

Gentlemen:

The aforementioned wells were originally completed as gas wells producing from the Dakata Formation. However, plan of developments/subsequent reports submitted for the Clay Basin Unit for calendar years 1977 through 1983 indicate that these wells are being converted to gas injection wells. If conversion has occurred, please submit sundry notices with subsurface schematics depicting the current status for each well. If alterations occurred to the casing while conversion was taking place, please submit Well Completion and Recompletion Report and Log for those wells affected, along with the aforementioned sundry notices.

Thank you for your cooperation in this matter. If you have any questions, please contact Allen McKee at (801) 789-1362.

Sincerely,

Craig M. Hansen

Craig M. Hansen
Assistant District Manager
for Minerals

CELSIUS ENERGY COMPANY

P.O. BOX 458 • ROCK SPRINGS, WYOMING 82901 • PHONE (307) 382-9791

May 8, 1985

Bureau of Land Management
Vernal District Office
170 South 500 East
Vernal, Utah 84078

MAY 13 1985

Re: Well No. 2
Sec. 21, T3N, R24E, SLB&M
Lease SLC-045051-A

Well No. 3
Sec. 16, T3N, R24E, SLB&M
State Lease

Well No. 4
Sec. 27, T3N, R24E, SLB&M
Lease SLC-045053-A

Well No. 5
Sec. 20, T3N, R24E, SLB&M
Fee Lease

Well No. 6
Sec. 23, T3N, R24E, SLB&M
Lease SLC-045051-B

Well No. 10
Sec. 23, T3N, R24E, SLB&M
Lease SLC-045049

Well No. 11
Sec. 22, T3N, R24E, SLB&M
Lease SLC-045051-A

All in Clay Basin Unit.
All in Daggett County, Utah

Dear Mr. McKee:

In reference to your letter 3100 on Clay Basin Unit, the above wells in question have all been converted to gas injection/withdrawal wells. This work was performed in 1976. Attached are sundries for wells that were reperforated in the Dakota along with schematics depicting each wells current status.

Thank you for bringing this matter to our attention. If you have any further questions, please contact me at 307-382-9791.

Sincerely,

Robert L. Rasmussen

Robert L. Rasmussen
Staff Engineer

RLR/srl

Attachments

Present Status of Wellhead

Clay Basin Unit No. 10

after recompletion as a gas storage well 11-24-76

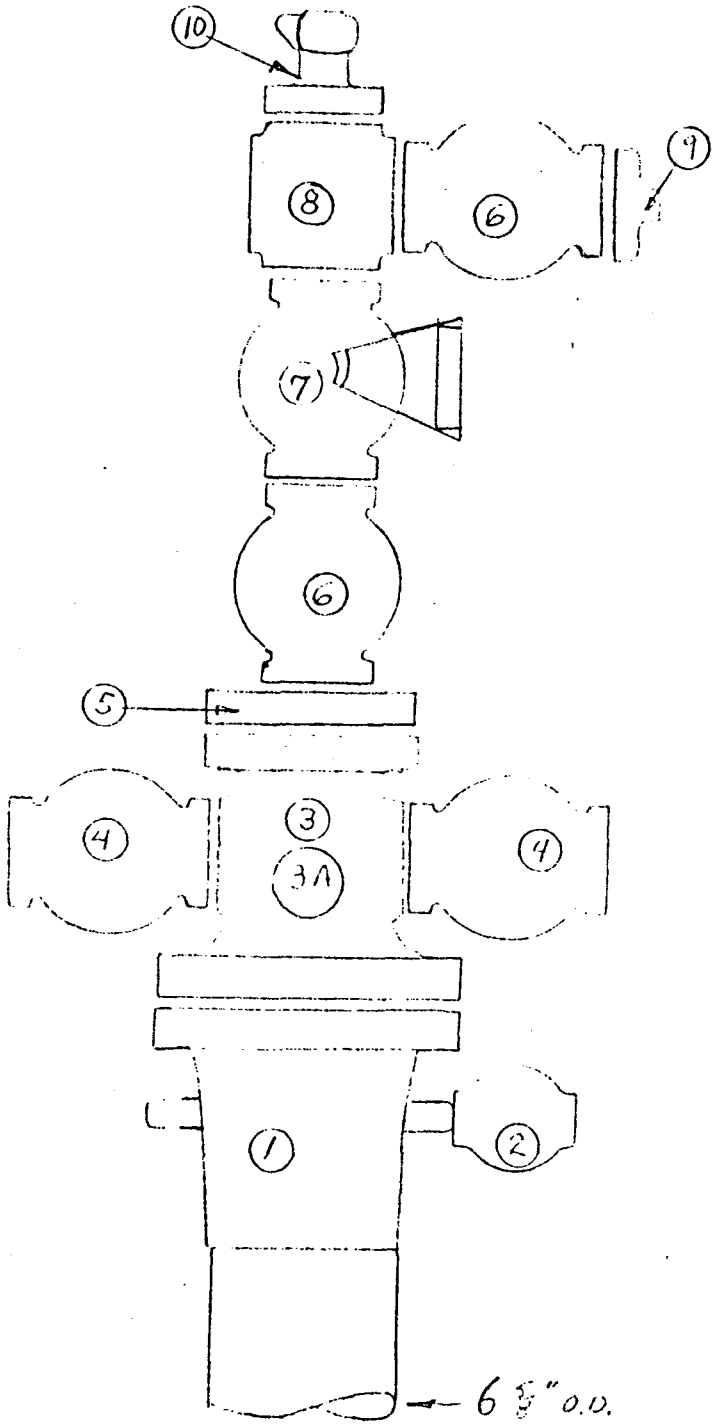

12-13-76

(1) 10" X 3000 psi casing flange, Type B slip-weld for 6-5/8"
(2) 1 - 2" Demco ball valve with 2" X 6" HD nipple and 2" XH bull plug
(3) 1 - NSCo. DP-70 tubing spool, 6" X 3000 psi by 10" X 3000 psi
(4) 2 - 2" X 3000 psi WKM gate valve flanged
(5) 1 - 6" - 3000 psi X 3" - 3000 psi double studded adapter
(6) 2 - 3" X 3000 psi WKM gate valve flanged
(7) 1 - 3" X 3000 psi WKM gate valve flanged, equipped with safety actuator
(8) 1 - studded block tee 3" X 3" X 3" - 3000 psi
(9) 1 - weld flange 3" - 3000 psi by schedule 80 weld
(10) 1 - tree top adapter 3" - 3000 psi flanged bottom, with 3-1/2" 8 round EUE lift threads
(3A) 1 - NSCo. tubing hanger, Type DP 4 H-1 tapped 3-1/2" 8 round ST&C

Schematic
not drawn to scale.

Sec. 22-T3N-R24E
Daggett Co, Utah.

Drilled by MFSCo
1947 by rotary.
Deepened by MFSCo
1969- by rotary

3N 24E Sec. 22
API 43009 15635 FRTR

PRESENT STATUS of WELL
UNIT WELL No. 11
(formerly R.D. MURPHY Well No. 6-W)
CLAY BASIN FIELD.

8-13-55 JJ
Revised 12-22-69 JJ
Revised 2-12-70 JJ

Original KB - 6517.50 ft.
9.31 ft
10.50 ft
6" - 1500 flange
Concrete mat 6507.00 ft.
0.68
10" Series 900 csg flange.
Collar 6 ft deep.

13 3/8" - 48# - 54.5# - 61# Std csg

33 Jts - 987' 2" gross or 979.88 net
landed at 994.75 ft or 14.87' below
KB. Cmtd w/ 810 sx Monolite +
1 deal reg cmt. First 4 Jts welded
solid above & below collars - next
6 Jts spot welded. Baker guide
shoe run on bottom Jt Howco
float collar placed on top of
first Jt - Cmtd by Howco.

994.75 ft - 13 3/8" O.D. csg

9 5/8" - 36# - 40# Std J-55 & N-80 csg

36 Jts	40#	LT&C	N-80	1131.92
37 Jts	40#	LT&C	J-55	1187.92
116 Jts	36#	STC	J-55	3542.41
179 Jts				5862.25

Above csg landed @ 5875.42 or
13.17 ft below KB in a Schaffer
spool type csg head. Howco guide
shoe & Howco float collar which are
included in net measurements were
run on bottom & top of first Jt and
spot welded as were the next 6 Jts
above & below collars. Cmtd w/ 400 sx
Monolite & 1 deal reg cmt by Howco.

4308 ft Cmt fillup behind 9 5/8"
csg - by temperature survey.

FRONTIER SAND
5300 ft
5430 ft
237 9/16" holes.
Squeezed w/110 sx cmt
w/maximum pressure of 4000 psi

Bottom of 2 3/8" tbg @ 5603 ft KBM.
Pump seating nipple @ 5570 ft KBM.
5592 FT BAKER MODEL "DA" PRODUCTION PACKER
FLAPPER VALVE REMOVED

4 1/2 INCH PRODUCTION CASING — NET
1 - 30' 4 1/2 INCH O.D. 11.6# N-80 ... 31.67
179 JTS 4 1/2 INCH O.D. 11.6# N-80, 8RD, LT&C — 5547.61
BAKER LATCH TYPE SEAL NIPPLE — 2.03
5580.91

LANDED ABOVE CSG AT 5592.09 FT KBM OR 11.18 FT BELOW KB IN A BAKER MODEL "DA" RETAINER PRODUCTION PACKER (W/ FLAPPER VALVE REMOVED) WITH 10,000 POUNDS INDICATER WEIGHT AND REMAINDER OF 32,000 POUNDS INDICATER WEIGHT ON SLIPS IN THE 12-INCH SERIES 900 BY 10 INCH SERIES 900 CSG FLANGE INSTALLED A NSCO TYPE E 10-INCH SERIES 900 BY 6 INCH SERIES 1500 PRESSURE CROSSOVER TBG SPOOL.

NOTE: THE BAKER MODEL "DA" PRODUCTION PACKER WAS SET AT 5600 FT KBM BY DRESSER ATLAS WIRE LINE MEASUREMENTS. THE CSG WAS LANDED AT 5592.09 FT KBM. THE CSG IS LANDED AND LATCHED INTO THE PRODUCTION PACKER

DAKOTA SAND
5640 ft
5720 ft
235 9/16" holes
5765 ft
5800 ft
105 9/16" holes.

Sand level - 5780 ft KBM by wireline 2-10-70

5819 FT BAKER MODEL "N" CAST IRON BRIDGE PLUG
tagged with tbg 2-10-70

5875 ft 9 5/8" O.D. csg

2 3/8" O.D. Production Tubing 2-12-70 — NET

1 - NSCo type H-1 tbg hanger 2 3/8" EUE	0.44
179 Jts 2 3/8" O.D. 4.7# J-55 8rd EUE	5560.27
1 - 2 3/8" pump seating nipple w/ collar	0.76
1 - Jt 2 3/8" O.D. 4.7# J-55 8rd EUE	31.68
1 - Shop made combination closing tool + shoe	0.73
	5593.88

Above tbg landed @ 5603.19 ft KBM
or 9.31 ft below KB in a NSCo
6" - 1500 tbg flange.

CEMENT — 6128' - 6228' 68 SCKS REG CMT
CEMENT — 6500' - 6600' 34 SCKS 50-50 POZMIX
CEMENT — 7600' - 7700' 34 SCKS 50-50 POZMIX
CEMENT — 8900' - 9000' 40 SCKS 50-50 POZMIX
CEMENT — 9500' - 9600' 40 SCKS 50-50 POZMIX
CEMENT — 10,625' - 10,825' 68 SCKS 50-50 POZMIX

11,778 ft New T.D. 8 3/4" hole.

Schematic
not drawn to scale.

PRESENT STATUS of WELLHEAD
UNIT WELL No. 11
CLAY BASIN FIELD

1-5-70 JJS

After deepening and then plug back operations of December, 1969.

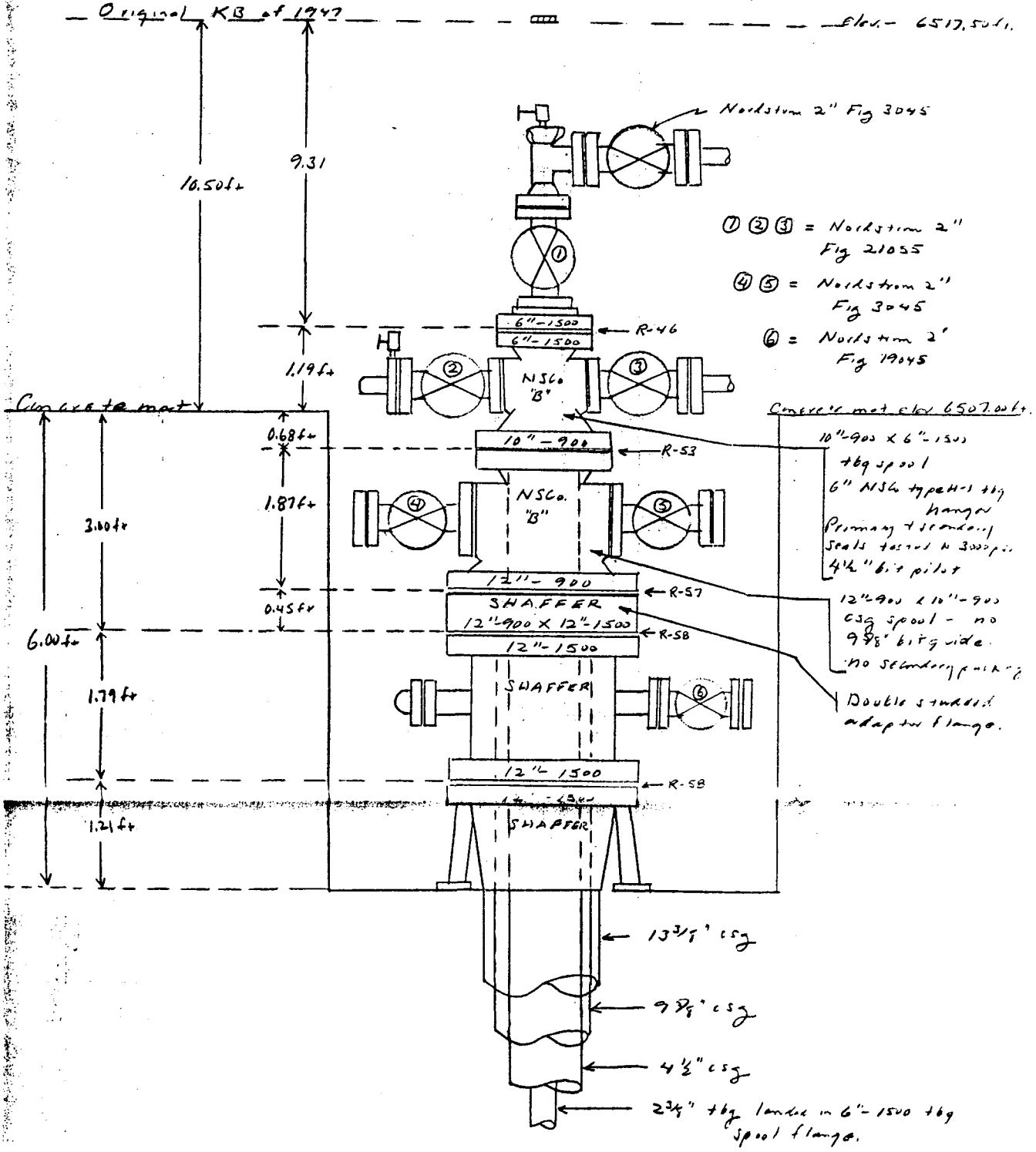

Clay Basin Unit #10 | Sec 23, 3N, 24E | Kirtley 14 June 88

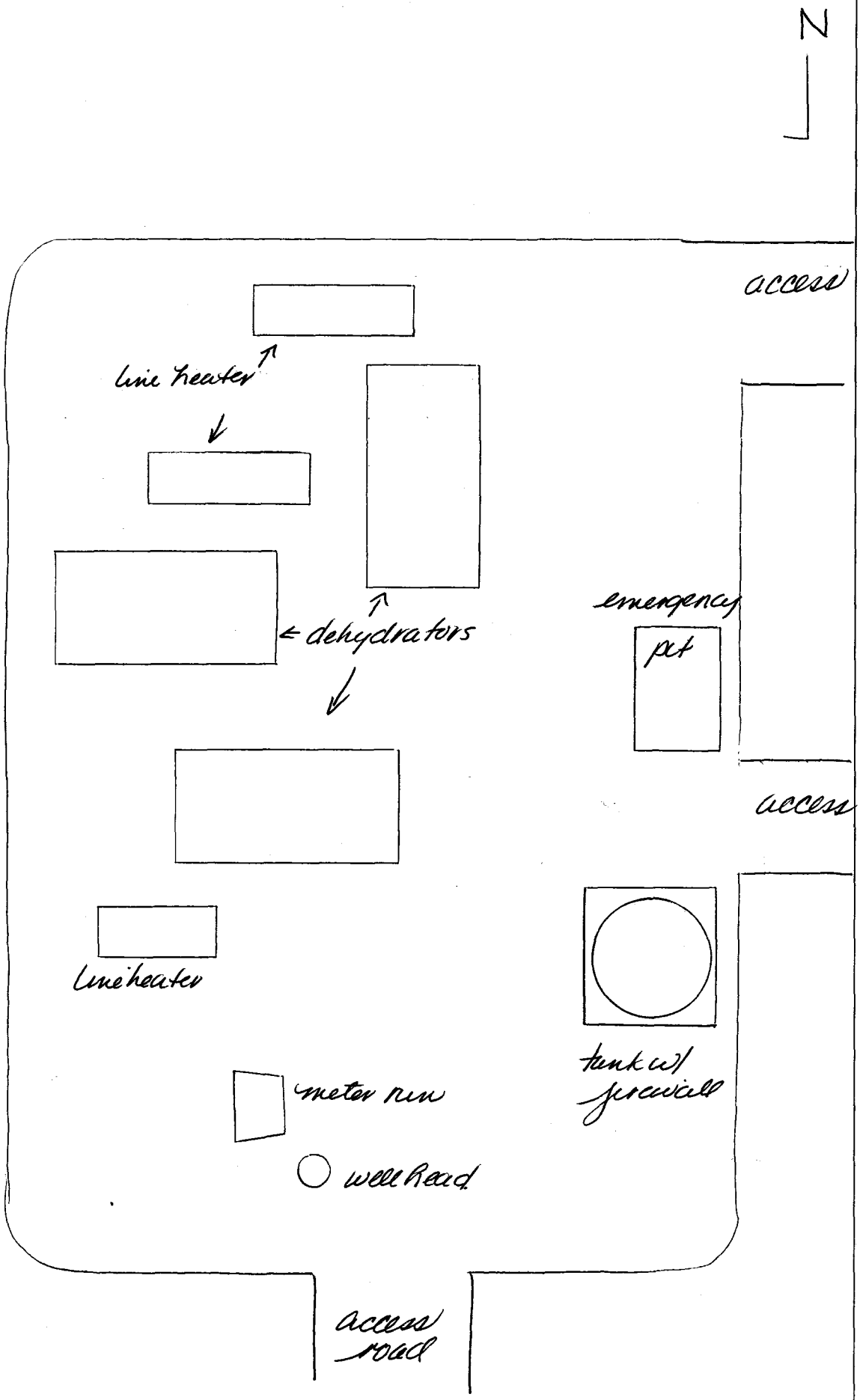

42-381 50 SHEETS 5 SQUARE
42-382 100 SHEETS 5 SQUARE
42-389 200 SHEETS 5 SQUARE
NATIONAL

CELSIUS ENERGY COMPANY

P.O. BOX 458 • ROCK SPRINGS, WYOMING 82901 • PHONE (307) 382-9791

RECEIVED

JUN 27 1985

DIVISION OF OIL
GAS & MINING

June 25, 1985

State of Utah Natural Resources
Oil, Gas and Mining
355 W N Temple, Suite 350
Salt Lake City, Utah 84180-1203

Re: Well No. 2
Sec. 21, T3N, R24E, SLB&M
Lease SLC-045051-A

Well No. 3
Sec. 16, T3N, R24E, SLB&M
State Lease

Well No. 4
Sec. 27, T3N, R24E, SLB&M
Lease SLC-045053-A

Well No. 5
Sec. 20, T3N, R24E, SLB&M
Fee Lease

Well No. 6
Sec. 23, T3N, R24E, SLB&M
Lease SLC-045051-B

[redacted]
Sec. 23, T3N, R24E, SLB&M
Lease SLC-045049

Well No. 11
Sec. 22, T3N, R24E, SLB&M
Lease SLC-045051-A

All in Clay Basin Unit.
All in Daggett County, Utah

Dear Ms. Poulsen:

In reference to your letter on the Clay Basin Unit, the above wells in question have all been converted to gas injection/withdrawal wells. This work was performed in 1976. Attached are sundries for wells that were reperforated in the Dakota along with schematics depicting each wells current status.

Thank you for bringing this matter to our attention. If you have any further questions, please contact me at 307-382-9791.

Sincerely,

Robert L. Rasmussen

Robert L. Rasmussen
Staff Engineer

RLR/srl

Attachments

3N 24E Sec. 23
API # 43009 15634
FR-DK

8-15-55 / JJS.
Revised 10-10-75 / JJS
Revised 12-10-76 / JJS

PRESENT STATUS of WELL

Drilled by MESCO
1941

CLAY BASIN
FIELD

UNIT WELL No 10
(formerly C.L. Spack No.1)
23 - 3N - 24E
DAGGETT CO UTAH

KB 6671 ft
Hog head 5'11"
11 ft
Production floor - 6660 ft
Cellar filled
5'4"

CSG RECORD

10 3/4" - 36# 8rd API LAPWELD csg

15 Jts 303'0" gross, 300'2" net landed @ 314'6" or 14'4" below K.B. Cmtd. 5-1-41 by Howco w/225 sx Monolith, last 50 sx treated. No csg clamps used as pipe was cmtd from bottom to top with returns in cellar. Common csg shoe used & spot welded to bottom joint. First 4 Jts were spot welded above & below collars.

6 5/8" 26# 10thd & 4 3/4" 16# 10thd csg

Production string consisting of the following was set & cmt 6-23-41

	Gross	Net
2 Jts 6 5/8" 26# 10thd csg	56'2"	55'8"
192 Jts 4 3/4" 16# 10thd csg	5993'3"	5958'4"

194 Jts CASING landed @ 6027'1" or 13'1" below KB - Baker float shoe used on bottom of first joint & Baker float collar used on top first joint. Neither csg nor shoe welded. A steel reducing collar was used to connect 6 5/8" and 4 3/4" casing the two top joints were 6 5/8" 26# J-55

3 1/2" Tubing FB-1 Packer

	net
1- Baker model FB-1 packer size 24-23	1.61
1- Mill out extension	5.60
1- Seal bore protector	9.00
1- 3 1/2" non-upset pin to 2 3/8" EUE pin	0.48
1- 2 3/8" J-55 8rd EUE pup joint	4.11
1- Baker model 'F' nipple size 1.75	0.90
1- 2 3/8 J-55 8rd EUE pup joint	4.05
1- Baker model 'F' nipple size 1.75	0.90
	27.41

3 1/2" Tubing

	net
1- NSCO type DV4-H-1 tbg hanger tapped 3 1/2" top & bottom	0.60
1- 3 1/2" EUE by 3 1/2 Hydril FJ nipple	0.42
1- 3 1/2" 9.2# J-55 Hydril FJ pup	9.67
1- 3 1/2" 9.2# J-55 Hydril FJ pup	1.98
165 Jts 3 1/2" 9.2# J-55 Hydril FJ tbg	5798.23
1- 3 1/2" Hydril FJ box by 2 3/8 EUE pin	0.68
1- 2 3/8" Baker model 'L' sliding sleeve size 2.31 (open)	2.75
1- 2 3/8" 6.4# N-80 EUE pup	8.05
1- 2 3/8" EUE box to 3 1/2" Hydril pin	0.62
1- Baker seal assembly size 21-23 I.D. 1.812	9.25
	5832.25

Tubing landed @ 5841.25 ft KBM by 9.00 ft below KB on Baker packer in 10,000# compression.

55'8" bottom 6 5/8" 26# 10thd csg

314'6" 10 3/4" 36# 8rd csg. cmt w/225 sx

4930 ft cmt fill up behind 4 3/4" csg based on bond log

5594 ft
5645 ft
Frontier Sand

5836 ft Baker FB-1 packer

5841.25 ft bottom of 3 1/2" tubing

5894'
5906'6"
24 holes DAKOTA

5916'
5932'6"
34 holes DAKOTA

5954'
5977'6"
48 holes DAKOTA

PBD - 5990 ft

6027'11" 4 3/4" 16# 10thd csg cmt w/500 sx

6045 ft T.D. - 9" hole

Form OGC-1b

STATE OF UTAH
DEPARTMENT OF NATURAL RESOURCES
DIVISION OF OIL, GAS, AND MINING

SUBMIT IN TRIPLICATE
(Other instructions on reverse side)

SUNDRY NOTICES AND REPORTS ON WELLS

(Do not use this form for proposals to drill or to deepen or plug back to a different reservoir. Use "APPLICATION FOR PERMIT—" for such proposals.)

1. OIL WELL [ ] GAS WELL [X] OTHER Gas Storage Well

2. NAME OF OPERATOR: Questar Pipeline Company

3. ADDRESS OF OPERATOR: P.O. Box 11450, Salt Lake City, UT 84147

4. LOCATION OF WELL (Report location clearly and in accordance with any State requirements.* See also space 17 below.) At surface: 330' FS, 2310' FE 23

5. LEASE DESIGNATION AND SERIAL NO.: SL - 045049

6. IF INDIAN, ALLOTTEE OR TRIBE NAME:

7. UNIT AGREEMENT NAME: Clay Basin Unit

8. FARM OR LEASE NAME: Unit Well

9. WELL NO.: 10

10. FIELD AND POOL, OR WILDCAT: Clay Basin

11. SEC., T., R., M., OR BLK. AND SURVEY OR AREA: SW 1/4 SE 1/4 23-3N-24E

14. PERMIT NO.: 43-009-15629

15. ELEVATIONS (Show whether DF, RT, GR, etc.): 6659'

12. COUNTY OR PARISH: Daggett

13. STATE: Utah

16. **Check Appropriate Box To Indicate Nature of Notice, Report, or Other Data**

NOTICE OF INTENTION TO:				SUBSEQUENT REPORT OF:			
TEST WATER SHUT-OFF	[ ]	PULL OR ALTER CASING	[ ]	WATER SHUT-OFF	[ ]	REPAIRING WELL	[ ]
FRACTURE TREAT	[ ]	MULTIPLE COMPLETE	[ ]	FRACTURE TREATMENT	[ ]	ALTERING CASING	[ ]
SHOOT OR ACIDIZE	[ ]	ABANDON*	[ ]	SHOOTING OR ACIDIZING	[ ]	ABANDONMENT*	[ ]
REPAIR WELL	[ ]	CHANGE PLANS	[ ]	(Other)			[ ]
(Other) Run chemical injection mandrel			[ ]	(NOTE: Report results of multiple completion on Well Completion or Recompletion Report and Log form.)			

17. DESCRIBE PROPOSED OR COMPLETED OPERATIONS (Clearly state all pertinent details, and give pertinent dates, including estimated date of starting any proposed work. If well is directionally drilled, give subsurface locations and measured and true vertical depths for all markers and zones pertinent to this work.)*

The purpose of the workover is to run chemical injection valve with 1/4" control line to make continuous methanol injection possible during withdrawal. The program consists of the following:

1. Set plug in "R" nipple.
2. Circulate hole with $CaCl_2$ water.
3. Pull the 4 1/2" tubing with seal assembly.
4. Rerun tubing with chemical injection mandrel.
5. Remove the water from the hole.
6. Pull plug.

This workover is planned to be carried out in August, September or October of 1993.

APPROVED BY THE STATE OF UTAH DIVISION OF OIL, GAS, AND MINING
DATE: 6-21-93
BY: T.A. Matthews

RECEIVED
JUN 1 0 1993
DIVISION OF OIL, GAS & MINING

18. I hereby certify that the foregoing is true and correct

SIGNED [signature] TITLE Staff Petroleum Engineer DATE June 17, 1993

(This space for Federal or State office use)

APPROVED BY _____ TITLE _____ DATE _____

CONDITIONS OF APPROVAL, IF ANY:

*See Instructions on Reverse Side

QUESTAR PIPELINE COMPANY

79 SOUTH STATE STREET • P.O. BOX 11450 • SALT LAKE CITY, UTAH 84147 • PHONE (801) 530-2400 • FAX (801) 530-2570

November 18, 1993

State of Utah
Department of Natural Resources
Division of Oil, Gas & Mining
3 Triad Center, Suite 350
Salt Lake City, UT 84180-1203

Dear Gentlemen:

Please find attached "Sundry Notices" for seven wells in Clay Basin. The workover in these wells was started on August 30, 1993 and completed on October 27, 1993.

If you have any questions, please call me at (801) 530-2006.

Sincerely,

Zoltan Bessenyei
Staff Petroleum Engineer

ZB:dc
RE3007

NOV 2 2 1993

Form 3160-5
(November 1983)
(Formerly 9-331)

UNITED STATES
DEPARTMENT OF THE INTERIOR
BUREAU OF LAND MANAGEMENT

SUBMIT IN TRIPLICATE*
(Other instructions on reverse side)

Form approved.
Budget Bureau No. 1004-0135
Expires August 31, 1985

5. LEASE DESIGNATION AND SERIAL NO.
SL - 045049

6. IF INDIAN, ALLOTTEE OR TRIBE NAME

SUNDRY NOTICES AND REPORTS ON WELLS

(Do not use this form for proposals to drill or to deepen or plug back to a different reservoir. Use "APPLICATION FOR PERMIT—" for such proposals.)

1. OIL WELL [ ] GAS WELL [X] OTHER Gas Storage Well

7. UNIT AGREEMENT NAME
Clay Basin Unit

2. NAME OF OPERATOR
Questar Pipeline Company

8. FARM OR LEASE NAME
Unit Well

3. ADDRESS OF OPERATOR
P.O. Box 11450, Salt Lake City, UT 84147

9. WELL NO.
10

4. LOCATION OF WELL (Report location clearly and in accordance with any State requirements.* See also space 17 below.)
At surface
330' FSL, 2310' FEL 23

10. FIELD AND POOL, OR WILDCAT
Clay Basin

11. SEC., T., R., M., OR BLK. AND SURVEY OR AREA
SW 1/4 SE 1/4 23-3N-24E

14. PERMIT NO.
43-009-15634

15. ELEVATIONS (Show whether DF, RT, GR, etc.)
6659'

12. COUNTY OR PARISH
Daggett

13. STATE
Utah

16. **Check Appropriate Box To Indicate Nature of Notice, Report, or Other Data**

NOTICE OF INTENTION TO:				SUBSEQUENT REPORT OF:			
TEST WATER SHUT-OFF	[ ]	PULL OR ALTER CASING	[ ]	WATER SHUT-OFF	[ ]	REPAIRING WELL	[ ]
FRACTURE TREAT	[ ]	MULTIPLE COMPLETE	[ ]	FRACTURE TREATMENT	[ ]	ALTERING CASING	[ ]
SHOOT OR ACIDIZE	[ ]	ABANDON*	[ ]	SHOOTING OR ACIDIZING	[ ]	ABANDONMENT*	[ ]
REPAIR WELL	[ ]	CHANGE PLANS	[ ]	(Other) Ran chemical injection mandrel			[ ]
(Other)			[ ]				

(NOTE: Report results of multiple completion on Well Completion or Recompletion Report and Log form.)

17. DESCRIBE PROPOSED OR COMPLETED OPERATIONS (Clearly state all pertinent details, and give pertinent dates, including estimated date of starting any proposed work. If well is directionally drilled, give subsurface locations and measured and true vertical depths for all markers and zones pertinent to this work.)*

The purpose of the workover was to run chemical injection valve with 1/4" control line to make continuous methanol injection possible during withdrawal. The program consisted of the following:

1. Set plug in "R" nipple.
2. Circulated hole with $CaCl_2$ water.
3. Pulled the 4 1/2" tubing with seal assembly.
4. Ran pipe analysis log.
5. Reran tubing with chemical injection mandrel.
6. Removed the water from the hole.
7. Pulled plug.

This workover was carried out in October of 1993.

NOV 22 1995
DIVISION OF
OIL, GAS & MINING

18. I hereby certify that the foregoing is true and correct

SIGNED [signature] TITLE Staff Petroleum Engineer DATE November 17, 1993

(This space for Federal or State office use)

APPROVED BY _____ TITLE _____ DATE _____
CONDITIONS OF APPROVAL, IF ANY:

***See Instructions on Reverse Side**

Title 18 U.S.C. Section 1001, makes it a crime for any person knowingly and willfully to make to any department or agency of the United States any false, fictitious or fraudulent statements or representations as to any matter within its jurisdiction.

QUESTAR PIPELINE COMPANY

79 SOUTH STATE STREET • P. O. BOX 11450 • SALT LAKE CITY, UTAH 84147 • PHONE (801) 530-2400

June 23, 1988

CERTIFIED MAIL
RETURNED RECEIPT REQUESTED
#P 879 571 459

Bureau of Land Management
Utah State Office
CFS Financial Center
324 S. State Street
Salt Lake City, UT 84111-2303

Re: Name Change
Mountain Fuel Resources, Inc.
to Questar Pipeline Company

Gentlemen:

Enclosed for your files and information is a certified copy of the Articles of Amendment to the Articles of Incorporation of Mountain Fuel Resources, Inc. dated March 7, 1988, indicating that Mountain Fuel Resources, Inc. changed its name to Questar Pipeline Company.

Questar Pipeline Company holds interests in the following Federal Oil and Gas Leases in Utah:

No wells on gas hold. w/in CA - U-9712-A - Questar Pipeline Co. 100%
CA well - RT & OR'S Mtn. Fuel Resources - U-11246 - Asgnmt pending to "Questar Energy of CO"
SLC-045051(A) OR'S
SLC-045051(B)
SLC-045053(A) OR'S
SLC-045053(B)
SLC-062508 - OR'S
SLC-070555 - OR'S
SLC-070555(A) - OR'S
? Agreement No. 14-08-0001-16009
(Clay Basin Gas Storage Agreement)
Tarnell

Please note and adjust your records in accordance with the above and furnish verification of your receipt of this notice to the undersigned.

Sincerely,

J. B. Neese
Senior Landman

JBN/sdg

Enclosure

List of Leases

Overriding Royalties

U-09712-A
U-011246

Operating Rights

SL-045051-A & B
SL-045053-A & B
SL-062508
SL-070555
SL-070555-A
SL-045049-A & B

Clay Basin Gas Storage Agreement
Agreement No. 14-08-0001-16009

3100
U-09712-A
et al
(U-942)
C. Seare
3/9/89

DECISION

Questar Pipeline Company	:	Oil and Gas Leases
P.O. Box 11450	:	U-09712-A et al
Salt Lake City, Utah 84147	:	

Corporate Name Change Recognized

Acceptable evidence has been received establishing that Mountain Fuel Resources, Inc. has changed their name to Questar Pipeline Company. Accordingly, the surviving company, Questar Pipeline Company, is recognized as holding all interests in Federal oil and gas leases which were held by Mountain Fuel Resources, Inc. We are changing our records with respect to the attached listing of oil and gas leases. If there are any other leases that will be affected, please contact this office.

/s/ M. Willis

ACTING Chief, Minerals
Adjudication Section

Enclosure
List of Leases

cc: All District Offices, Utah
MMS, AFS
MMS, BRASS
920, Teresa Thompson
Clay Basin Unit File

CSeare:sl 3/9/89:1642f

RECEIVED
JAN 2 8 2004
DIV. OF OIL, GAS & MINING

Division of Oil, Gas and Mining

OPERATOR CHANGE WORKSHEET

ROUTING
1. GLH
2. CDW
3. FILE

Change of Operator (Well Sold) — Designation of Agent/Operator

X Operator Name Change — Merger

The operator of the well(s) listed below has changed, effective: **3/7/1988**

FROM: (Old Operator):	**TO:** (New Operator):
N1070-Wexpro Company PO Box 45360 Salt Lake City, UT 84145-0360 Phone: 1-(801) 534-5267	N7560-Questar Pipeline Company PO Box 11450 Salt Lake City, UT 84147 Phone: 1-(801) 530-2019

CA No. **Unit:**

WELL(S)

NAME	SEC	TWN	RNG	API NO	ENTITY NO	LEASE TYPE	WELL TYPE	WELL STATUS
CLAY BASIN UNIT 39-S	21	030N	240E	4300930030	1025	Federal	GS	A
CLAY BASIN UNIT 48-S	21	030N	240E	4300930044	1025	Federal	GS	A
CLAY BASIN UNIT 50-S	21	030N	240E	4300930046	1025	Federal	GS	A
CLAY BASIN UNIT 51-S	21	030N	240E	4300930047	1025	Federal	GS	A
CLAY BASIN UNIT 58-S	21	030N	240E	4300930054	1025	Federal	GS	A
CLAY BASIN UNIT 60-S	21	030N	240E	4300930056	1025	Federal	GS	A
CLAY BASIN U 11 (RD MURPHY 6-W)	22	030N	240E	4300915635	1025	Federal	GS	A
CLAY BASIN 28-S	22	030N	240E	4300930021	1025	Federal	GS	A
CLAY BASIN UNIT 32-S	22	030N	240E	4300930023	1025	Federal	GS	A
CLAY BASIN UNIT 36-S	22	030N	240E	4300930027	1025	Federal	GS	A
CLAY BASIN UNIT 54-S	22	030N	240E	4300930050	1025	Federal	GS	A
CLAY BASIN U 6 (RD MURPHY 3)	23	030N	240E	4300915630	1025	Federal	GS	A
CLAY BASIN U 10 (1 CL SPARKS)	23	030N	240E	4300915634	1025	Federal	GS	A
CLAY BASIN UNIT 29-S	23	030N	240E	4300930020	1025	Federal	GS	A
CLAY BASIN UNIT 31-S	23	030N	240E	4300930022	1025	Federal	GS	A
CLAY BASIN UNIT 44-S	23	030N	240E	4300930040	1025	Federal	GS	A
CLAY BASIN UNIT 45-S	23	030N	240E	4300930041	1025	Federal	GS	A
CLAY BASIN UNIT 57-S	24	030N	240E	4300930053	1025	Federal	GS	A
CLAY BASIN UNIT 41-S	26	030N	240E	4300930032	1025	Federal	GS	A
CLAY BASIN UNIT 42-S	26	030N	240E	4300930033	1025	Federal	GS	A
CLAY BASIN UNIT 43-S	26	030N	240E	4300930039	1025	Federal	GS	A

OPERATOR CHANGES DOCUMENTATION

Enter date after each listed item is completed

1. (R649-8-10) Sundry or legal documentation was received from the **FORMER** operator on: 1/13/2004
2. (R649-8-10) Sundry or legal documentation was received from the **NEW** operator on: 1/13/2004
3. The new company was checked on the **Department of Commerce, Division of Corporations Database on:** 1/14/2004
4. Is the new operator registered in the State of Utah: **YES** Business Number: 649172-0142
5. If NO, the operator was contacted contacted on: ____

6. (R649-9-2)Waste Management Plan has been received on: IN PLACE

7. **Federal and Indian Lease Wells:** The BLM and or the BIA has approved the merger, name change, or operator change for all wells listed on Federal or Indian leases on: 3/9/1989

8. **Federal and Indian Units:**
The BLM or BIA has approved the successor of unit operator for wells listed on: n/a

9. **Federal and Indian Communization Agreements ("CA"):**
The BLM or BIA has approved the operator for all wells listed within a CA on: n/a

10. **Underground Injection Control ("UIC"** The Division has approved UIC Form 5, **Transfer of Authority to Inject,** for the enhanced/secondary recovery unit/project for the water disposal well(s) listed on: N/A

DATA ENTRY:

1. Changes entered in the **Oil and Gas Database on:** 1/29/2004
2. Changes have been entered on the **Monthly Operator Change Spread Sheet on:** 1/29/2004
3. Bond information entered in RBDMS on: 1/29/2004
4. Fee wells attached to bond in RBDMS on: 1/29/2004
5. Injection Projects to new operator in RBDMS on: n/a

STATE WELL(S) BOND VERIFICATION:

1. State well(s) covered by Bond Number: 965003032

FEDERAL WELL(S) BOND VERIFICATION:

1. Federal well(s) covered by Bond Number: 965002976

INDIAN WELL(S) BOND VERIFICATION:

1. Indian well(s) covered by Bond Number: n/a

FEE WELL(S) BOND VERIFICATION:

1. (R649-3-1) The **NEW** operator of any fee well(s) listed covered by Bond Number 965003033

2. The **FORMER** operator has requested a release of liability from their bond on: N/A
The Division sent response by letter on: N/A

LEASE INTEREST OWNER NOTIFICATION:

3. (R649-2-10) The **FORMER** operator of the fee wells has been contacted and informed by a letter from the Division of their responsibility to notify all interest owners of this change on: 1/29/2004

COMMENTS:

NEW ENTITY NUMBERS ASSIGNED FEBRUARY 2004

ACCT	OPERATOR NAME	API NUM.	Sec	Twnshp	Rng	WELL NAME	ENTITY	EFF DATE	REASON
N7560	Questar Pipeline Co	4300930050	22	030N	240E	Clay Basin Unit 54-S	1025 to 14040	2/10/2004	Clay Basin Gas Storage
N7560	Questar Pipeline Co	4300915630	23	030N	240E	Clay Basin U 6 (RD Murphy 1	1025 to 14040	2/10/2004	Clay Basin Gas Storage
N7560	Questar Pipeline Co	4300915634	23	030N	240E	Clay Basin U 10 (1 CL Sparks	1025 to 14040	2/10/2004	Clay Basin Gas Storage
N7560	Questar Pipeline Co	4300930020	23	030N	240E	Clay Basin Unit 29-S	1025 to 14040	2/10/2004	Clay Basin Gas Storage
N7560	Questar Pipeline Co	4300930022	23	030N	240E	Clay Basin Unit 31-S	1025 to 14040	2/10/2004	Clay Basin Gas Storage
N7560	Questar Pipeline Co	4300930040	23	030N	240E	Clay Basin Unit 44-S	1025 to 14040	2/10/2004	Clay Basin Gas Storage
N7560	Questar Pipeline Co	4300930041	23	030N	240E	Clay Basin Unit 45-S	1025 to 14040	2/10/2004	Clay Basin Gas Storage
N7560	Questar Pipeline Co	4300930053	24	030N	240E	Clay Basin Unit 57-S	1025 to 14040	2/10/2004	Clay Basin Gas Storage
N7560	Questar Pipeline Co	4300930032	26	030N	240E	Clay Basin Unit 41-S	1025 to 14040	2/10/2004	Clay Basin Gas Storage
N7560	Questar Pipeline Co	4300930033	26	030N	240E	Clay Basin Unit 42-S	1025 to 14040	2/10/2004	Clay Basin Gas Storage
N7560	Questar Pipeline Co	4300930039	26	030N	240E	Clay Basin Unit 43-S	1025 to 14040	2/10/2004	Clay Basin Gas Storage
N7560	Questar Pipeline Co	4300930042	26	030N	240E	Clay Basin Unit 46-S	1025 to 14040	2/10/2004	Clay Basin Gas Storage
N7560	Questar Pipeline Co	4300930051	26	030N	240E	Clay Basin Unit 55-S	1025 to 14040	2/10/2004	Clay Basin Gas Storage
N7560	Questar Pipeline Co	4300930052	26	030N	240E	Clay Basin Unit 56-S	1025 to 14040	2/10/2004	Clay Basin Gas Storage
N7560	Questar Pipeline Co	4300915628	27	030N	240E	Clay Basin U 4 (ES Lauzer 1)	1025 to 14040	2/10/2004	Clay Basin Gas Storage
N7560	Questar Pipeline Co	4300930025	27	030N	240E	Clay Basin Unit 34-S	1025 to 14040	2/10/2004	Clay Basin Gas Storage
N7560	Questar Pipeline Co	4300930028	27	030N	240E	Clay Basin Unit 37-S	1025 to 14040	2/10/2004	Clay Basin Gas Storage
N7560	Questar Pipeline Co	4300930029	27	030N	240E	Clay Basin Unit 38-S	1025 to 14040	2/10/2004	Clay Basin Gas Storage
N7560	Questar Pipeline Co	4300930043	27	030N	240E	Clay Basin Unit 47-S	1025 to 14040	2/10/2004	Clay Basin Gas Storage

Note to file: These entity numbers were changed to compliment the operator correction from 3/7/98

FEDERAL APPROVAL OF THIS ACTION IS NECESSARY

FORM 9

STATE OF UTAH
DEPARTMENT OF NATURAL RESOURCES
DIVISION OF OIL, GAS, AND MINING

5.LEASE DESIGNATION AND SERIAL NUMBER: SL-045049

SUNDRY NOTICES AND REPORTS ON WELLS

Do not use this form for proposals to drill new wells, significantly deepen existing wells below current bottom-hole depth, reenter plugged wells, or to drill horizontal laterals. Use APPLICATION FOR PERMIT TO DRILL form for such proposals.

6. IF INDIAN, ALLOTTEE OR TRIBE NAME:

7.UNIT or CA AGREEMENT NAME: CLAY BASIN GAS STORAGE

1. TYPE OF WELL Gas Storage Well

8. WELL NAME and NUMBER: CLAY BASIN U 10 (1 CL SPARKS)

2. NAME OF OPERATOR: QUESTAR PIPELINE COMPANY

9. API NUMBER: 43009156340000

3. ADDRESS OF OPERATOR: P.O.Box 45360 , Salt Lake city , UT, 84145

PHONE NUMBER: 801 324-5061 Ext

9. FIELD and POOL or WILDCAT: CLAY BASIN

4. LOCATION OF WELL
FOOTAGES AT SURFACE: 0330 FSL 2310 FEL
QTR/QTR, SECTION, TOWNSHIP, RANGE, MERIDIAN: Qtr/Qtr: SWSE Section: 23 Township: 03.0N Range: 24.0E Meridian: S

COUNTY: DAGGETT

STATE: UTAH

11. CHECK APPROPRIATE BOXES TO INDICATE NATURE OF NOTICE, REPORT, OR OTHER DATA

TYPE OF SUBMISSION

- ✓ NOTICE OF INTENT — Approximate date work will start: 5/9/2016
- ☐ SUBSEQUENT REPORT — Date of Work Completion:
- ☐ SPUD REPORT — Date of Spud:
- ☐ DRILLING REPORT — Report Date:

TYPE OF ACTION

☐ ACIDIZE	☐ ALTER CASING	☐ CASING REPAIR
☐ CHANGE TO PREVIOUS PLANS	☐ CHANGE TUBING	☐ CHANGE WELL NAME
☐ CHANGE WELL STATUS	☐ COMMINGLE PRODUCING FORMATIONS	☐ CONVERT WELL TYPE
☐ DEEPEN	☐ FRACTURE TREAT	☐ NEW CONSTRUCTION
☐ OPERATOR CHANGE	☐ PLUG AND ABANDON	☐ PLUG BACK
☐ PRODUCTION START OR RESUME	☐ RECLAMATION OF WELL SITE	☐ RECOMPLETE DIFFERENT FORMATION
☐ REPERFORATE CURRENT FORMATION	☐ SIDETRACK TO REPAIR WELL	☐ TEMPORARY ABANDON
☐ TUBING REPAIR	☐ VENT OR FLARE	✓ WATER DISPOSAL
☐ WATER SHUTOFF	☐ SI TA STATUS EXTENSION	☐ APD EXTENSION
☐ WILDCAT WELL DETERMINATION	☐ OTHER	OTHER: Install Dehy Tank

12. DESCRIBE PROPOSED OR COMPLETED OPERATIONS. Clearly show all pertinent details including dates, depths, volumes, etc.

Questar Pipeline Company proposes to install a Dehy Reflux Tank at the same location of the existing Dehy pond on Well #10 in Clay Basin. The tank is to be buried and is a double-wall metal reflux tank and will have a containment capacity of 80 bbl. Tank dimensions and drawings are attached. The work will include installing the buried tank, and installing three 2" diameter liquid dump lines and one 3" diameter reflux line and associated valves and fittings from the Dehy units at the well. Ground disturbance will be confined to previously disturbed areas as shown on attached photos. All work will occur within the existing Questar Pipeline leased area.

Accepted by the Utah Division of Oil, Gas and Mining
FOR RECORD ONLY
July 19, 2016

NAME (PLEASE PRINT)	PHONE NUMBER	TITLE
Chris B. Balling	801 324-3619	Property Agent - ROW

SIGNATURE	DATE
N/A	4/28/2016

RECEIVED: Apr. 28, 2016

Sundry Number: 71412 API Well Number: 43009156340000

Clay Basin Well #10

Access Road from Well Pad to Dehy Pit. Photo Dated July 1993

Legend