API Well Number: 43007503360000

STATE OF UTAH
DEPARTMENT OF NATURAL RESOURCES
DIVISION OF OIL, GAS AND MINING

FORM 3

AMENDED REPORT ☐

APPLICATION FOR PERMIT TO DRILL

1. WELL NAME and NUMBER
Prickly Pear UF 5-10D-12-15

2. TYPE OF WORK
DRILL NEW WELL ■ REENTER P&A WELL ○ DEEPEN WELL ○

3. FIELD OR WILDCAT
UNDESIGNATED

4. TYPE OF WELL
Gas Well Coalbed Methane Well: NO

5. UNIT or COMMUNITIZATION AGREEMENT NAME
PRICKLY PEAR

6. NAME OF OPERATOR
BILL BARRETT CORP

7. OPERATOR PHONE
303 312-8164

8. ADDRESS OF OPERATOR
1099 18th Street Ste 2300, Denver, CO, 80202

9. OPERATOR E-MAIL
BHilgers@billbarrettcorp.com

10. MINERAL LEASE NUMBER (FEDERAL, INDIAN, OR STATE)
UTU73006

11. MINERAL OWNERSHIP
FEDERAL ■ INDIAN ○ STATE ○ FEE ○

12. SURFACE OWNERSHIP
FEDERAL ■ INDIAN ○ STATE ○ FEE ○

13. NAME OF SURFACE OWNER (if box 12 = 'fee')

14. SURFACE OWNER PHONE (if box 12 = 'fee')

15. ADDRESS OF SURFACE OWNER (if box 12 = 'fee')

16. SURFACE OWNER E-MAIL (if box 12 = 'fee')

17. INDIAN ALLOTTEE OR TRIBE NAME (if box 12 = 'INDIAN')

18. INTEND TO COMMINGLE PRODUCTION FROM MULTIPLE FORMATIONS
YES ○ (Submit Commingling Application) NO ■

19. SLANT
VERTICAL ○ DIRECTIONAL ■ HORIZONTAL ○

20. LOCATION OF WELL	FOOTAGES	QTR-QTR	SECTION	TOWNSHIP	RANGE	MERIDIAN
LOCATION AT SURFACE	1622 FNL 148 FEL	SENE	9	12.0 S	15.0 E	S
Top of Uppermost Producing Zone	1979 FNL 667 FWL	SWNW	10	12.0 S	15.0 E	S
At Total Depth	1979 FNL 667 FWL	SWNW	10	12.0 S	15.0 E	S

21. COUNTY
CARBON

22. DISTANCE TO NEAREST LEASE LINE (Feet)
667

23. NUMBER OF ACRES IN DRILLING UNIT
40

25. DISTANCE TO NEAREST WELL IN SAME POOL (Applied For Drilling or Completed)
656

26. PROPOSED DEPTH
MD: 7596 TVD: 7445

27. ELEVATION - GROUND LEVEL
6758

28. BOND NUMBER
WYB000040

29. SOURCE OF DRILLING WATER / WATER RIGHTS APPROVAL NUMBER IF APPLICABLE
NINE MILE CANYON

Hole, Casing, and Cement Information

String	Hole Size	Casing Size	Length	Weight	Grade & Thread	Max Mud Wt.	Cement	Sacks	Yield	Weight
Cond	24	14	0 - 40	0.0	Unknown	0.0	No Used	0	0.0	0.0
							No Used	0	0.0	0.0
Surf	12.25	9.625	0 - 1000	0.0	J-55 ST&C	0.0	No Used	0	0.0	0.0
							No Used	0	0.0	0.0
Prod	8.75	4.5	0 - 7596	0.0	P-110 LT&C	0.0	No Used	0	0.0	0.0
							No Used	0	0.0	0.0

ATTACHMENTS

VERIFY THE FOLLOWING ARE ATTACHED IN ACCORDANCE WITH THE UTAH OIL AND GAS CONSERVATION GENERAL RULES

- ✔ WELL PLAT OR MAP PREPARED BY LICENSED SURVEYOR OR ENGINEER
- ✔ COMPLETE DRILLING PLAN
- ☐ AFFIDAVIT OF STATUS OF SURFACE OWNER AGREEMENT (IF FEE SURFACE)
- ☐ FORM 5. IF OPERATOR IS OTHER THAN THE LEASE OWNER
- ✔ DIRECTIONAL SURVEY PLAN (IF DIRECTIONALLY OR HORIZONTALLY DRILLED)
- ✔ TOPOGRAPHICAL MAP

NAME Brady Riley **TITLE** Permit Analyst **PHONE** 303 312-8115

SIGNATURE **DATE** 05/04/2012 **EMAIL** briley@billbarrettcorp.com

API NUMBER ASSIGNED
43007503360000

APPROVAL
Permit Manager

RECEIVED: May 16, 2012

DRILLING PROGRAM

BILL BARRETT CORPORATION

Prickly Pear Unit Federal 5-10D-12-15

SENE, 1622' FNL, 148' FEL, Sec. 9, T12S-R15E (surface hole)

SWNW, 1979' FNL, 667' FWL, Sec. 10, T12S-R15E (bottom hole)

Carbon County, Utah

---

1 – 2. Estimated Tops of Geological Markers and Formations Expected to Contain Water, Oil and Gas and Other Minerals

Formation	Depth – MD	Depth – TVD
Green River	Surface	Surface
Wasatch	2601'	2555'
North Horn	4716'	4565'
Dark Canyon	6486'	6335'
Price River	6791'	6640'
TD	7596'	7445'

**PROSPECTIVE PAY: ***Members of the Mesaverde formation and Wasatch formation (inclusive of the North Horn) are primary objectives for oil/gas. Any shallow water zones encountered will be adequately protected and reported. All potentially productive hydrocarbon zones will be cemented off.

3. BOP and Pressure Containment Data

Depth Intervals	BOP Equipment
0 – 1000'	No pressure control required
1000' – TD	11" 3000# Ram Type BOP 11" 3000# Annular BOP
- Drilling spool to accommodate choke and kill lines;	
- Ancillary equipment and choke manifold rated at 3,000#. All BOP and BOPE tests will be in accordance with the requirements of onshore Order No. 2;	
- The BLM and the State of Utah Division of Oil, Gas and Mining will be notified 24 hours in advance of all BOP pressure tests.	
- BOP hand wheels may be underneath the sub-structure of the rig if the drilling rig used is set up to operate most efficiently in this manner.	

RECEIVED: May 04, 2012

Bill Barrett Corporation
Drilling Program
Prickly Pear Unit Federal 5-10D-12-15
Carbon County, Utah

4. Casing Program

Hole Size	Setting Depth From	Setting Depth To	Casing Size	Casing Weight	Casing Grade	Thread	Condition
24”	Surface	40’	14”	65#			
12 ¼”	Surface	1000’	9 5/8”	36#	J or K 55	ST&C	New
8 ¾” and 7 7/8”	Surface	TD’	4 ½”	11.6#	I-100, N-80, P110	LT&C	New
Note: BBC will use one of the options of production casing size noted above. Casing grade for each option could be I-100, P-110 or I-80. In addition, the 7 7/8” hole size will begin at the point the bit is changed.							

5. Cementing Program

14” Conductor Casing	Grout cement
9 5/8” Surface Casing	*Lead* with approximately 170 sx Varicem cement + additives mixed at 12.0 ppg (yield = 2.53 ft^3/sx). *Tail* with approximately and 190 sx Halcem cement with additives mixed at 15.8 ppg (yield = 1.16 ft^3/sx) circulated to surface with 100% excess.
4 ½” Production Casing	*Lead* with approximately 310 sx of Halliburton Light Premium cement with additives mixed at 12.5 ppg (yield = 1.96 ft^3/sx). *Tail* with approximately 1250 sx of 50/50 Poz cement + additives mixed at 13.4 ppg (yield = 1.45 ft^3/sk), circulated to ~800’ with 15% excess.
Note: Actual volumes to be calculated from caliper log.	

6. Mud Program

Interval	Weight	Viscosity	Fluid Loss (API filtrate)	Remarks
0 – 40’	8.3 – 8.6	27 – 40	--	Native Spud Mud
40’ – 1000’	8.3 – 8.6	27 – 40	15 cc or less	Native/Gel/Lime
1000’ – TD	8.6 – 9.5	38 – 46	15 cc or less	LSND/DAP
Note: Sufficient mud materials to maintain mud properties, control lost circulation and to contain “kicks” will be available at wellsite. BBC may require minor amounts of diesel to be added to its fluid system in order to reduce torque and drag.				

7. Testing, Logging and Core Programs

Cores	None anticipated;
Testing	None anticipated;
Sampling	30’ to 50’ samples; surface casing to TD. Preserve samples all show intervals;
Surveys	Run every 1000’ and on trips, slope only;
Logging	DIL-GR-SP, FDC-CNL-GR-CAL-Pe-Microlog, Sonic-GR, all TD to surface.

RECEIVED: May 04, 2012

Bill Barrett Corporation
Drilling Program
Prickly Pear Unit Federal 5-10D-12-15
Carbon County, Utah

8. Anticipated Abnormal Pressures or Temperatures

No abnormal pressures or temperatures or other hazards are anticipated.

Maximum anticipated bottom hole pressure equals approximately 3678 psi* and maximum anticipated surface pressure equals approximately 2040 psi** (bottom hole pressure minus the pressure of a partially evacuated hole calculated at 0.22 psi/foot).

*Max Mud Wt x 0.052 x TD = A (bottom hole pressure)
**Maximum surface pressure = A – (0.22 x TD)

---

9. Auxiliary Equipment

a) Upper kelly cock; lower Kelly cock will be installed while drilling
b) Inside BOP or stab-in valve (available on rig floor)
c) Safety valve(s) and subs to fit all string connections in use
d) Mud monitoring will be visually observed

10. Drilling Schedule

Location Construction:	8/1/12
Spud:	3/1/13
Duration:	10 days drilling time
	15 days completion time

RECEIVED: May 04, 2012

Other -Onshore Variances Requested

Use of EFM and Flow Conditioner (Onshore Order No. 5)
Use of an electronic flow meter (EFM) for gas measurement purposes is requested with this application.

Use of a flow conditioner is also being requested (versus straightening vanes). Flow conditioners have been proven to be as or more effective than straightening vanes in conditioning gas for measurement. In addition to their superior conditioning properties, they take up less space (shorter meter runs/smaller footprint), and are less prone to corrosion and dislodging (greater reliability). In the past BBC has experienced straightening vanes becoming dislodged in normal service and compromising their conditioning effectiveness.

Make/Model: CPA 50E
Dimensions: 2" or 3" Flanged conditioners - 16" minimum up to 3 1/2' long x 2" (ID 2.067) OR 24" minimum up to 3 1/2' long x 3" (ID 3.068)

Air Drilling (Onshore Order No. 2)
Air drilling operations will be conducted with the purpose of drilling and setting surface casing with a truck mounted air rig, for all Federal wells located at this pad. Surface casing is approximately 1000'. Bill Barrett Corporation will comply with the following surface air drilling operation requirements:

1. Properly lubricated and maintained diverter system in place of a rotating head. The diverter system forces air and cutting returns to the cuttings pit and is used solely to drill the surface hole. In addition, BBC will use a properly lubricated and maintained rotating head in compliance with OOG No. 2.
2. The Blooie line will discharge at least 100 feet from the wellbore and will be securely anchored.
3. An automatic igniter or continuous pilot light will be installed at the end of the blooie line.
4. Compressors that supply energy to drill the air filled surface hole will be located 100' away from the wellbore and on the opposite side of the blooie line. The compressors will be equipped with 1) emergency kill switch, 2) pressure relief valves 3) spark arresters on the motors.

RECEIVED: May 04, 2012

PRESSURE CONTROL EQUIPMENT – Schematic Attached

A. Type: Eleven (11) Inch Double Gate Hydraulic BOP with Eleven (11) Inch Annular Preventer. The blow out preventer will be equipped as follows:

1. One (1) blind ram (above).
2. One (1) pipe ram (below).
3. Drilling spool with two (2) side outlets (choke side 3-inch minimum, kill side 2-inch minimum).
4. 3-inch diameter choke line.
5. Two (2) choke line valves (3-inch minimum).
6. Kill line (2-inch minimum).
7. Two (2) chokes.
8. Two (2) kill line valves, one of which shall be a check valve (2-inch minimum).
9. Upper kelly cock valve with handles available.
10. Safety valve(s) & subs to fit all drill string connections in use.
11. Pressure gauge on choke manifold.
12. Fill-up line above the uppermost preventer.

B. Pressure Rating: 3,000 psi

C. Testing Procedure:

Annular Preventer

At a minimum, the Annular Preventer will be pressure tested to 50% of the rated working pressure for a period of ten (10) minutes or until provisions of the test are met, whichever is longer.

At a minimum the above pressure test will be performed:

1. When the annular preventer is initially installed;
2. Whenever any seal subject to test pressure is broken;
3. Following related repairs; and
4. At thirty (30) day intervals.

In addition, the Annular Preventer will be functionally operated at least weekly.

Blow-Out Preventer

At a minimum, the BOP, choke manifold, and related equipment will be pressure tested to the approved working pressure of the BOP stack (if isolated from the surface casing by a test plug) or to 70% of the internal yieldstrength of the surface casing (if the BOP is not isolated from the casing by a test plug). Pressure will be

maintained for a period of at least ten (10) minutes or until the requirmentsof the test are met, whichever is longer.

At a minimum, the above pressure test will be performed:

1. When the BOP is initially installed;
2. Whenever any seal subject to test pressure is broken;
3. Following related repairs; and
4. At thirty (30) day intervals.

In addition the pipe and blind rams will be activated each trip, but not more than once each day. All BOP drills and tests will be recorded in the IADC driller's log.

D. Choke Manifold Equipment:

All choke lines will be straight lines unless turns use tee blocks or are targeted with running tees, and will be anchored to prevent whip and vibration.

E. Accumulator:

The accumulator will have sufficient capacity to open the hydraulically-controlled choke line valve (if so equipped), close all rams plus the annular preventer, and retain a minimum of 200 psi above precharge on the closing manifold without the use of closing unit pumps. The fluid reservoir capacity will be double the usable fluid volume of the accumulator system capacity and the fluid level of the reservoir will be maintained at the manufacturer's recommendations.

The BOP system will have two (2) independent power sources to close the preventers. Nitrogen bottles (3 minimum) will be one (1) of these independent power sources and will maintain a charge equal to the manufacturer's specifications.

The accumulator precharge pressure test will be conducted prior to connecting the closing unit to the BOP stack and at least once every six (6) months thereafter. The accumulator pressure will be corrected if the measured precharge pressure is found to be above or below the maximum or minimum limits specified in the *Onshore Oil & Gas Order Number 2.*

A manual locking device (i.e. hand wheels) or automatic locking device will be installed on all systems of 2M or greater. A valve will be installed in the closing line as close as possible to the annular preventer to act as a locking device. This valve will be maintained in the open position and will be closed only when the power source for the accumulator is inoperative.

Remote controls shall be readily accessible to the driller. Remote controls for all 3M or greater systems will be capable of closing all preventers. Remote controls for 5M or greater systems will be capable of both opening and closing all preventers. Master controls will be at the accumulator and will be capable of opening and closing all preventers and the choke line valve (if so equipped).

F. Miscellaneous Information:

The Blow-Out Preventer and related pressure control equipment will be installed, tested and maintained in compliance with the specifications in and requirements of *Onshore Oil & Gas Order Number 2.* The choke manifold will be located outside the rig sub-structure. The hydraulic BOP closing unit will be located at least twenty-five (25) feet from the well head but readily accessible to the driller. Exact locations and configurations of the hydraulic BOP closing unit will depend upon the particular rig contracted to drill this hole.

A flare line will be installed after the choke manifold, extending 125 feet (minimum) from the center of the drill hole to a separate flare pit.

Bill Barrett Corporation

NINE MILE CEMENT VOLUMES

Well Name: Prickly Pear Unit Federal 5-10D-12-15

Surface Hole Data:

Total Depth:	1,000'
Top of Cement:	0'
OD of Hole:	12.250"
OD of Casing:	9.625"

Calculated Data:

Lead Volume:	203.6	ft^3
Lead Fill:	650'	
Tail Volume:	109.6	ft^3
Tail Fill:	350'	

Cement Data:

Lead Yield:	2.53	ft^3/sk
Tail Yield:	1.16	ft^3/sk
% Excess:	100%	

Calculated # of Sacks:

# SK's Lead:	170
# SK's Tail:	190

Production Hole Data:

Total Depth:	7,596'
Top of Cement:	800'
OD of Hole:	8.750"
OD of Casing:	4.500"

Calculated Data:

Lead Volume:	522.1	ft^3
Lead Fill:	1,700'	
Tail Volume:	1565.2	ft^3
Tail Fill:	5,096'	

Cement Data:

Lead Yield:	1.96	ft^3/sk
Tail Yield:	1.45	ft^3/sk
% Excess:	15%	

Calculated # of Sacks:

# SK's Lead:	310
# SK's Tail:	1250

RECEIVED: May 04, 2012

Prickly Pear Unit Federal 5-10D-12-15 Proposed Cementing Program

Job Recommendation — **Surface Casing**

Lead Cement - (650' - 0')

Varicem ™ Cement	Fluid Weight:	12	lbm/gal
0.25 lbm/sk Poly-E-Flake	Slurry Yield:	2.53	ft^3/sk
	Total Mixing Fluid:	14.82	Gal/sk
	Top of Fluid:	0'	
	Calculated Fill:	650'	
	Volume:	36.25	bbl
	Proposed Sacks:	**170**	**sks**

Tail Cement - (1000' - 650')

Halcem ™ System	Fluid Weight:	15.8	lbm/gal
2.0% Calcium Chloride	Slurry Yield:	1.16	ft^3/sk
	Total Mixing Fluid:	4.98	Gal/sk
	Top of Fluid:	650'	
	Calculated Fill:	350'	
	Volume:	19.52	bbl
	Proposed Sacks:	**190**	**sks**

Job Recommendation — **Production Casing**

Lead Cement - (800' - 2500')

Halliburton Light Premium	Fluid Weight:	12.5	lbm/gal
0.3% Versaset	Slurry Yield:	1.96	ft^3/sk
0.3% Super CBL	Total Mixing Fluid:	10.48	Gal/sk
0.125 lbm/sk Poly-E-Flake	Top of Fluid:	800'	
0.25% Fe-2	Calculated Fill:	1,700'	
0.2% Econolite	Volume:	92.99	bbl
	Proposed Sacks:	**310**	**sks**

Tail Cement - (2500' - 7596')

50/50 Poz Premium	Fluid Weight:	13.4	lbm/gal
3.0 % KCL	Slurry Yield:	1.45	ft^3/sk
0.75% Halad®-322	Total Mixing Fluid:	6.82	Gal/sk
0.2% FWCA	Top of Fluid:	2,500'	
0.3% Super CBL	Calculated Fill:	5,096'	
0.125 lbm/sk Poly-E-Flake	Volume:	278.75	bbl
1.0 lbm/sk Granulite TR 1/4	**Proposed Sacks:**	**1250**	**sks**

RECEIVED: May 04, 2012

API Well Number: 43007503360000

T12S, R15E, S.L.B.&M.

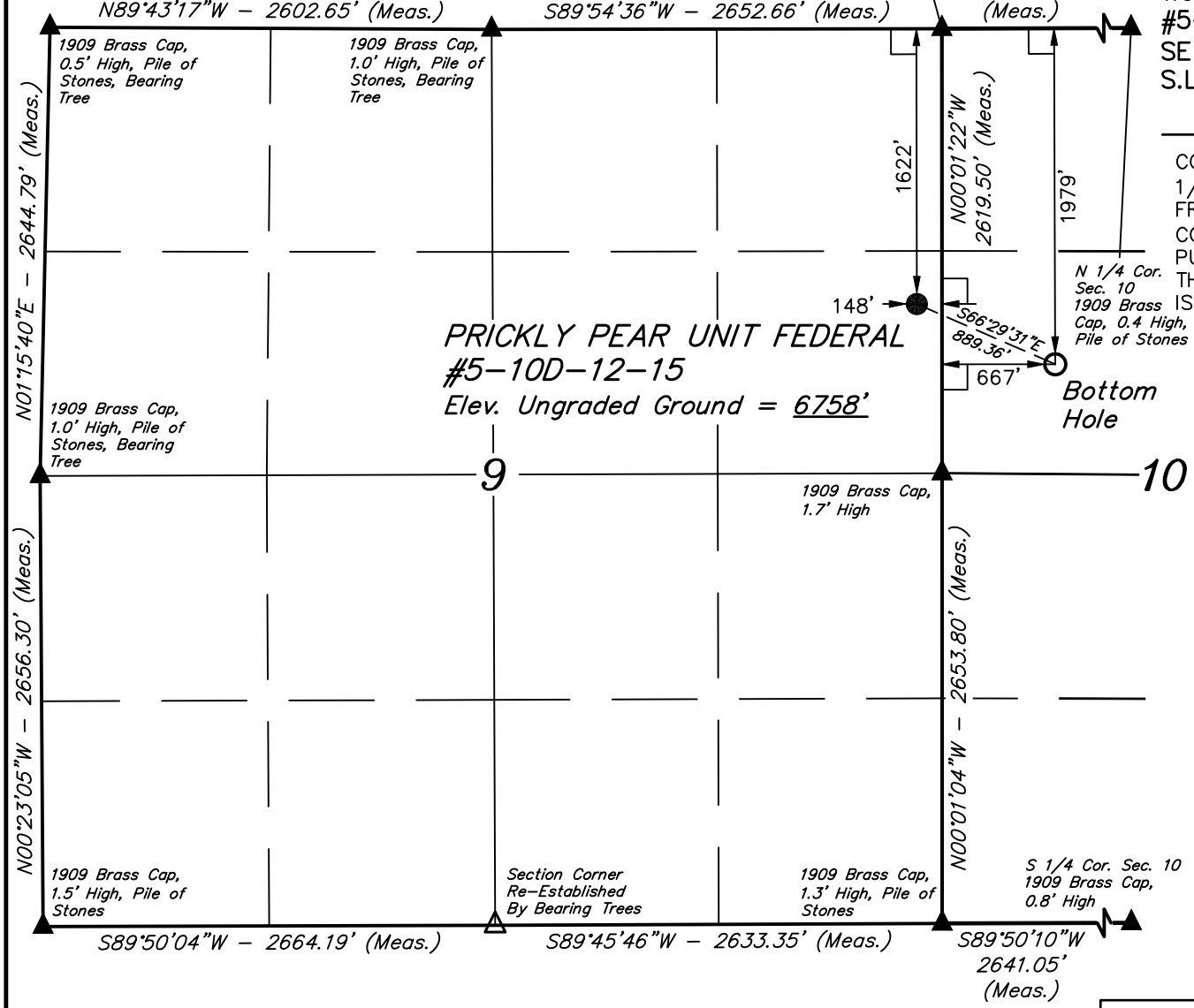

BILL BARRETT CORPORATION

Well location, PRICKLY PEAR UNIT FEDERAL #5-10D-12-15, located as shown in the SE 1/4 NE 1/4 of Section 9, T12S, R15E, S.L.B.&M., Carbon County, Utah.

BASIS OF ELEVATION

COTTON TRIANGULATION STATION LOCATED IN THE NW 1/4 OF SECTION 31, T12S, R16E, S.L.B.&M. TAKEN FROM THE TWIN HOLLOW QUADRANGLE, UTAH, CARBON COUNTY, 7.5 MINUTE SERIES (TOPOGRAPHICAL MAP) PUBLISHED BY THE UNITED STATES DEPARTMENT OF THE INTERIOR, GEOLOGICAL SURVEY. SAID ELEVATION IS MARKED AS BEING 7386 FEET.

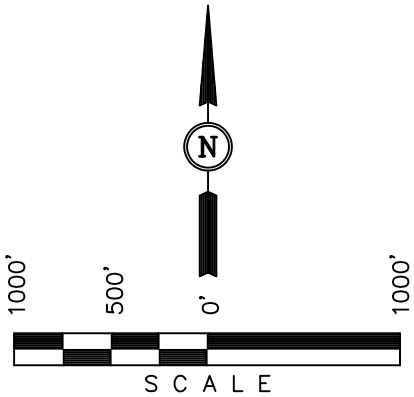

CERTIFICATE

THIS IS TO CERTIFY THAT THE ABOVE PLAT WAS PREPARED FROM FIELD NOTES OF ACTUAL SURVEYS MADE BY ME OR UNDER MY SUPERVISION AND THAT THE SAME ARE TRUE AND CORRECT TO THE BEST OF MY KNOWLEDGE AND BELIEF.

REGISTERED LAND SURVEYOR
REGISTRATION NO. 161319
STATE OF UTAH

REGISTERED LAND SURVEYOR NO. 161319 ROBERT L. KAY STATE OF UTAH 05-31-11

LEGEND:

- └ = 90° SYMBOL
- ● = PROPOSED WELL HEAD.
- ▲ = SECTION CORNERS LOCATED.
- △ = SECTION CORNERS RE-ESTABLISHED. (Not Set on Ground.)

BASIS OF BEARINGS

BASIS OF BEARINGS IS A G.P.S. OBSERVATION.

NAD 83 (TARGET BOTTOM HOLE)	NAD 83 (SURFACE LOCATION)
LATITUDE = 39°47'24.28" (39.790078)	LATITUDE = 39°47'27.78" (39.791050)
LONGITUDE = 110°13'48.35" (110.230097)	LONGITUDE = 110°13'58.79" (110.232997)
NAD 27 (TARGET BOTTOM HOLE)	NAD 27 (SURFACE LOCATION)
LATITUDE = 39°47'24.41" (39.790114)	LATITUDE = 39°47'27.91" (39.791086)
LONGITUDE = 110°13'45.79" (110.229386)	LONGITUDE = 110°13'56.24" (110.232289)
STATE PLANE NAD 27	STATE PLANE NAD 27
N: 533133.01 E: 2357027.81	N: 533475.43 E: 2356207.44

UINTAH ENGINEERING & LAND SURVEYING
85 SOUTH 200 EAST – VERNAL, UTAH 84078
(435) 789-1017

SCALE 1" = 1000'	DATE SURVEYED: 04-21-11	DATE DRAWN: 04-25-11
PARTY B.H. N.F. C.C.	REFERENCES G.L.O. PLAT	
WEATHER WARM	FILE BILL BARRETT CORPORATION	

RECEIVED: May 04, 2012

API Well Number: 43007503360000

BILL BARRETT CORPORATION

PRICKLY PEAR UNIT FEDERAL NE 9 PAD

PRICKLY PEAR UNIT FEDERAL #6A-10D-12-15, #5A-10D-12-15, #3-10D-12-15, #4-10D-12-15, #1-9D-12-15, #8A-9D-12-15, #2-9D-12-15, #7A-9D-12-15, #6-10D-12-15, #5-10D-12-15, #11A-10D-12-15, #12A-10D-12-15, #8-9D-12-15 & #7-9D-12-15

LOCATED IN UINTAH COUNTY, UTAH

SECTION 9, T12S, R15E, S.L.B.&M.

PHOTO: VIEW OF LOCATION STAKES — CAMERA ANGLE: NORTHWESTERLY

PHOTO: VIEW FROM BEGINNING OF PROPOSED ACCESS — CAMERA ANGLE: NORTHEASTERLY

- Since 1964 -

Uintah Engineering & Land Surveying
85 South 200 East Vernal, Utah 84078
(435) 789-1017 * FAX (435) 789-1813

LOCATION PHOTOS	04 MONTH	28 DAY	11 YEAR	PHOTO
TAKEN BY: B.H.	DRAWN BY: Z.L.	REVISED: 00-00-00		

BILL BARRETT CORPORATION

LOCATION LAYOUT FOR

PRICKLY PEAR UNIT FEDERAL NE 9 PAD

PRICKLY PEAR UNIT FEDERAL #6–10D–12–15, #5–10D–12–15, #11A–10D–12–15, #12A–10D–12–15, #8–9D–12–15, #7A–9D–12–15, #7–9D–12–15, #6A–10D–12–15, #5A–10D–12–15, #3–10D–12–15, #4–10D–12–15, #1–9D–12–15, #8A–9D–12–15 & #2–9D–12–15

SECTION 9, T12S, R15E, S.L.B.&M.

SE 1/4 NE 1/4

FIGURE #1

SCALE: 1" = 60'
DATE: 05–24–11
DRAWN BY: C.C.
REVISED: 06–27–11

NOTE:
Flare Pit is to be located a min. of 100' from the Well Head.

REGISTERED LAND SURVEYOR No. 161319 ROBERT L. KAY STATE OF UTAH 06–27–11

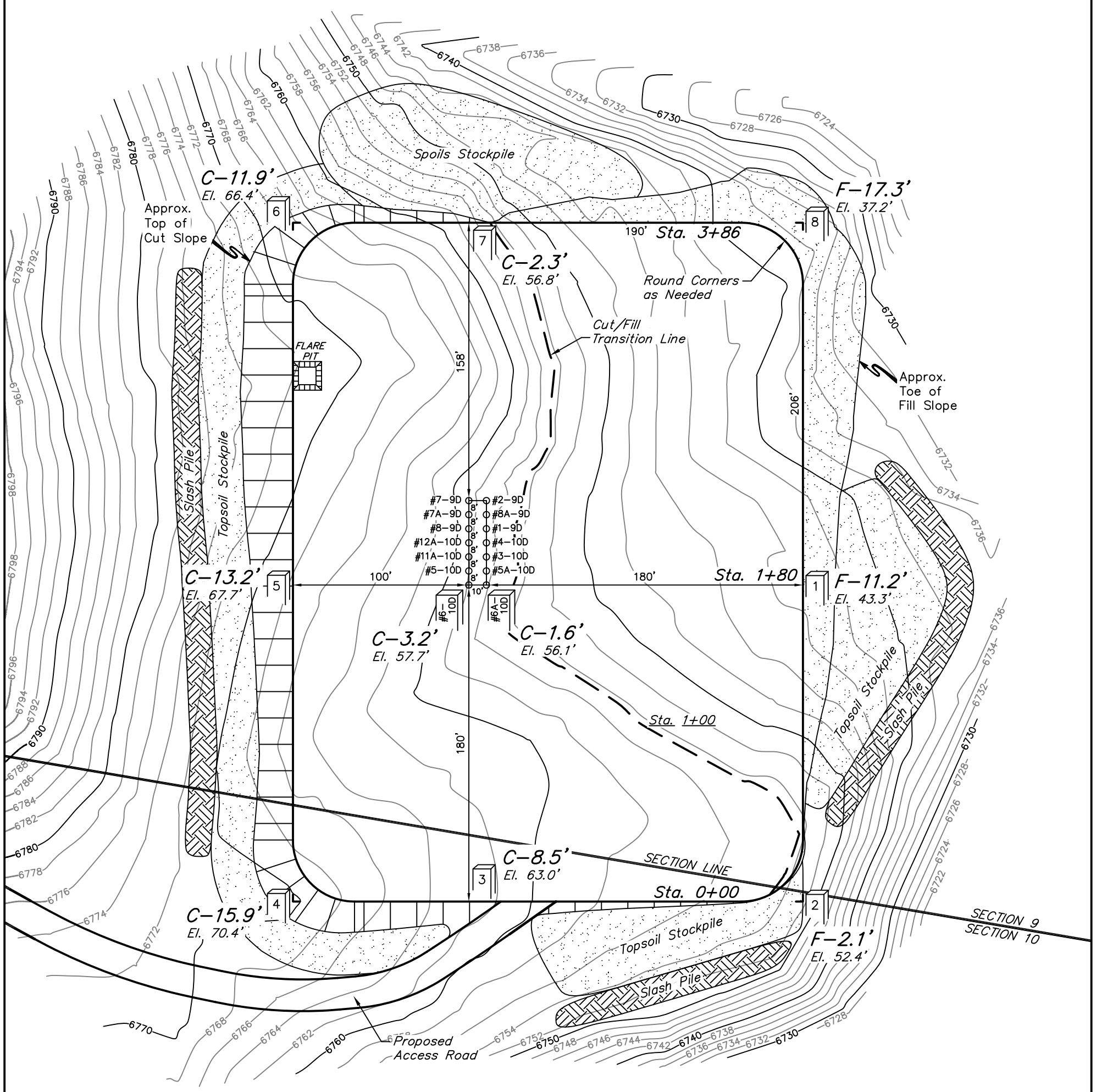

Elev. Ungraded Ground At #6–10D Loc. Stake = 6757.7'
FINISHED GRADE ELEV. AT #6–10D LOC. STAKE = 6754.5'

UINTAH ENGINEERING & LAND SURVEYING
85 So. 200 East * Vernal, Utah 84078 * (435) 789–1017

RECEIVED: May 04, 2012

1" = 40'
X-Section Scale
1" = 100'
DATE: 04-25-11
DRAWN BY: C.C.

BILL BARRETT CORPORATION

TYPICAL CROSS SECTIONS FOR

PRICKLY PEAR UNIT FEDERAL NE 9 PAD

PRICKLY PEAR UNIT FEDERAL #6-10D-12-15, #5-10D-12-15, #11A-10D-12-15, #12A-10D-12-15, #8-9D-12-15, #7A-9D-12-15, #7-9D-12-15, #6A-10D-12-15, #5A-10D-12-15, #3-10D-12-15, #4-10D-12-15, #1-9D-12-15, #8A-9D-12-15 & #2-9D-12-15

SECTION 9, T12S, R15E, S.L.B.&M.

SE 1/4 NE 1/4

FIGURE #2

REGISTERED LAND SURVEYOR No. 161319 ROBERT L. KAY STATE OF UTAH 06-07-11

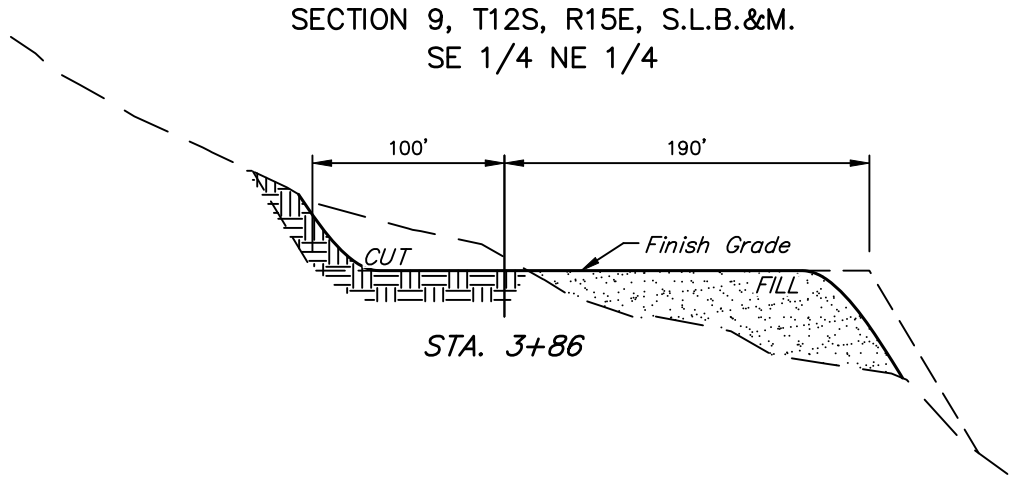

STA. 3+86

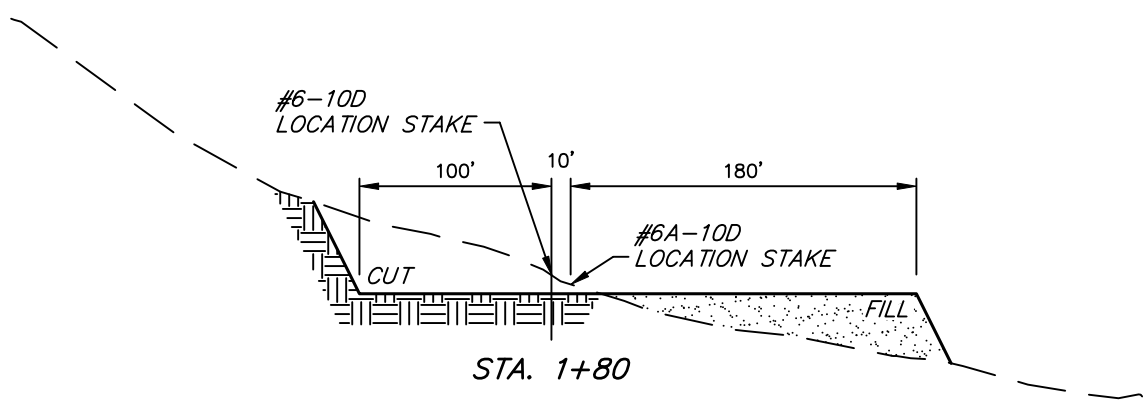

STA. 1+80

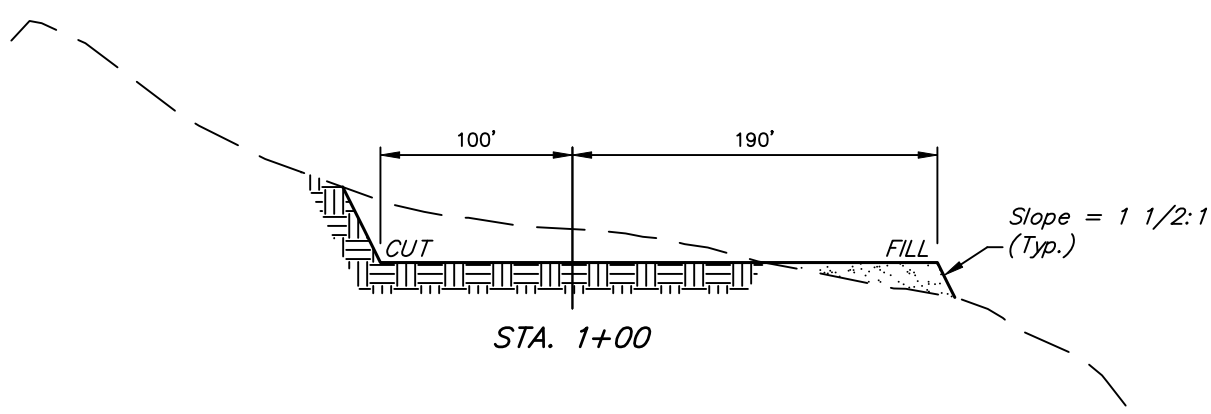

STA. 1+00

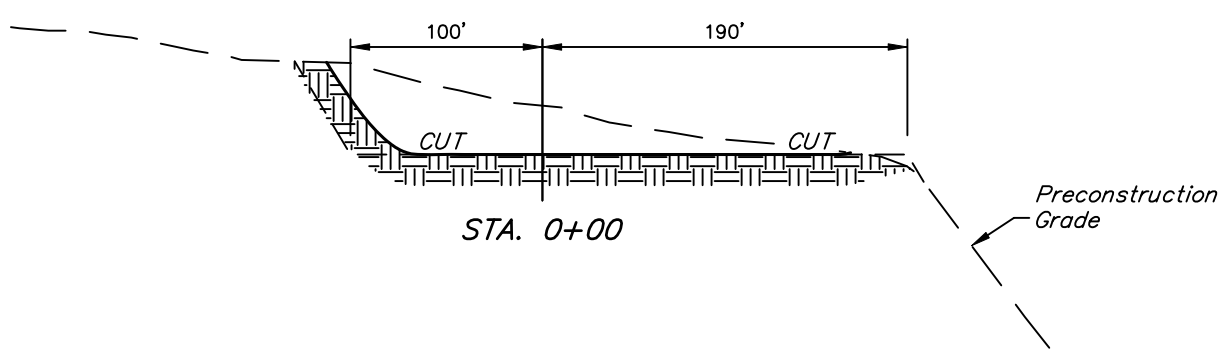

STA. 0+00

NOTE:
Topsoil should not be Stripped Below Finished Grade on Substructure Area.

* *NOTE:*
FILL QUANTITY INCLUDES 5% FOR COMPACTION

APPROXIMATE YARDAGES

(6") Topsoil Stripping	=	*2,580* Cu. Yds.	EXCESS MATERIAL	=	*5,750* Cu. Yds.
Remaining Location	=	*19,710* Cu. Yds.	Topsoil	=	*2,580* Cu. Yds.
TOTAL CUT	=	*22,290* CU.YDS.	EXCESS UNBALANCE (After Interim Rehabilitation)	=	*3,170* Cu. Yds.
FILL	=	*16,540* CU.YDS.			

UINTAH ENGINEERING & LAND SURVEYING
*85 So. 200 East * Vernal, Utah 84078 * (435) 789-1017*

RECEIVED: May 04, 2012

BILL BARRETT CORPORATION

TYPICAL RIG LAYOUT FOR

PRICKLY PEAR UNIT FEDERAL NE 9 PAD

PRICKLY PEAR UNIT FEDERAL #6-10D-12-15, #5-10D-12-15, #11A-10D-12-15, #12A-10D-12-15, #8-9D-12-15, #7A-9D-12-15, #7-9D-12-15, #6A-10D-12-15, #5A-10D-12-15, #3-10D-12-15, #4-10D-12-15, #1-9D-12-15, #8A-9D-12-15 & #2-9D-12-15

SECTION 9, T12S, R15E, S.L.B.&M.

SE 1/4 NE 1/4

FIGURE #3

REGISTERED LAND SURVEYOR No. 161319 ROBERT L. KAY STATE OF UTAH 06-07-11

SCALE: 1" = 60'
DATE: 04-25-11
DRAWN BY: C.C.

NOTE:
Flare Pit is to be located a min. of 100' from the Well Head.

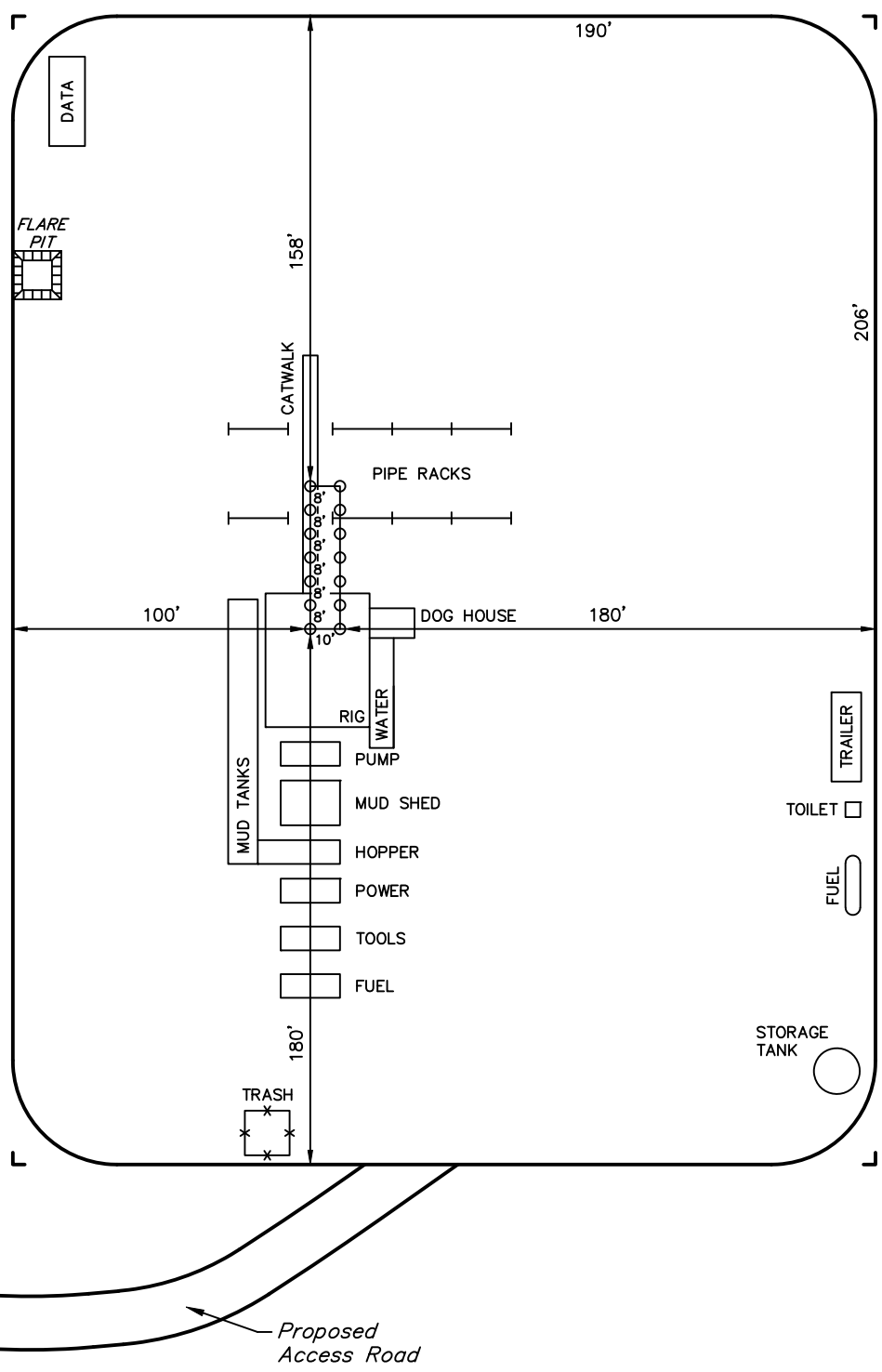

UINTAH ENGINEERING & LAND SURVEYING
*85 So. 200 East * Vernal, Utah 84078 * (435) 789-1017*

RECEIVED: May 04, 2012

BILL BARRETT CORPORATION

INTERIM RECLAMATION DRAWING FOR

PRICKLY PEAR UNIT FEDERAL NE 9 PAD

PRICKLY PEAR UNIT FEDERAL #6-10D-12-15, #5-10D-12-15, #11A-10D-12-15, #12A-10D-12-15, #8-9D-12-15, #7A-9D-12-15, #7-9D-12-15, #6A-10D-12-15, #5A-10D-12-15, #3-10D-12-15, #4-10D-12-15, #1-9D-12-15, #8A-9D-12-15 & #2-9D-12-15

SECTION 9, T12S, R15E, S.L.B.&M.

SE 1/4 NE 1/4

FIGURE #4

SCALE: 1" = 60'
DATE: 04-25-11
DRAWN BY: C.C.
REVISED: 06-27-11

NOTE:
Flare Pit is to be located a min. of 100' from the Well Head.

REGISTERED LAND SURVEYOR No. 161319 ROBERT L. MAY STATE OF UTAH 06-27-11

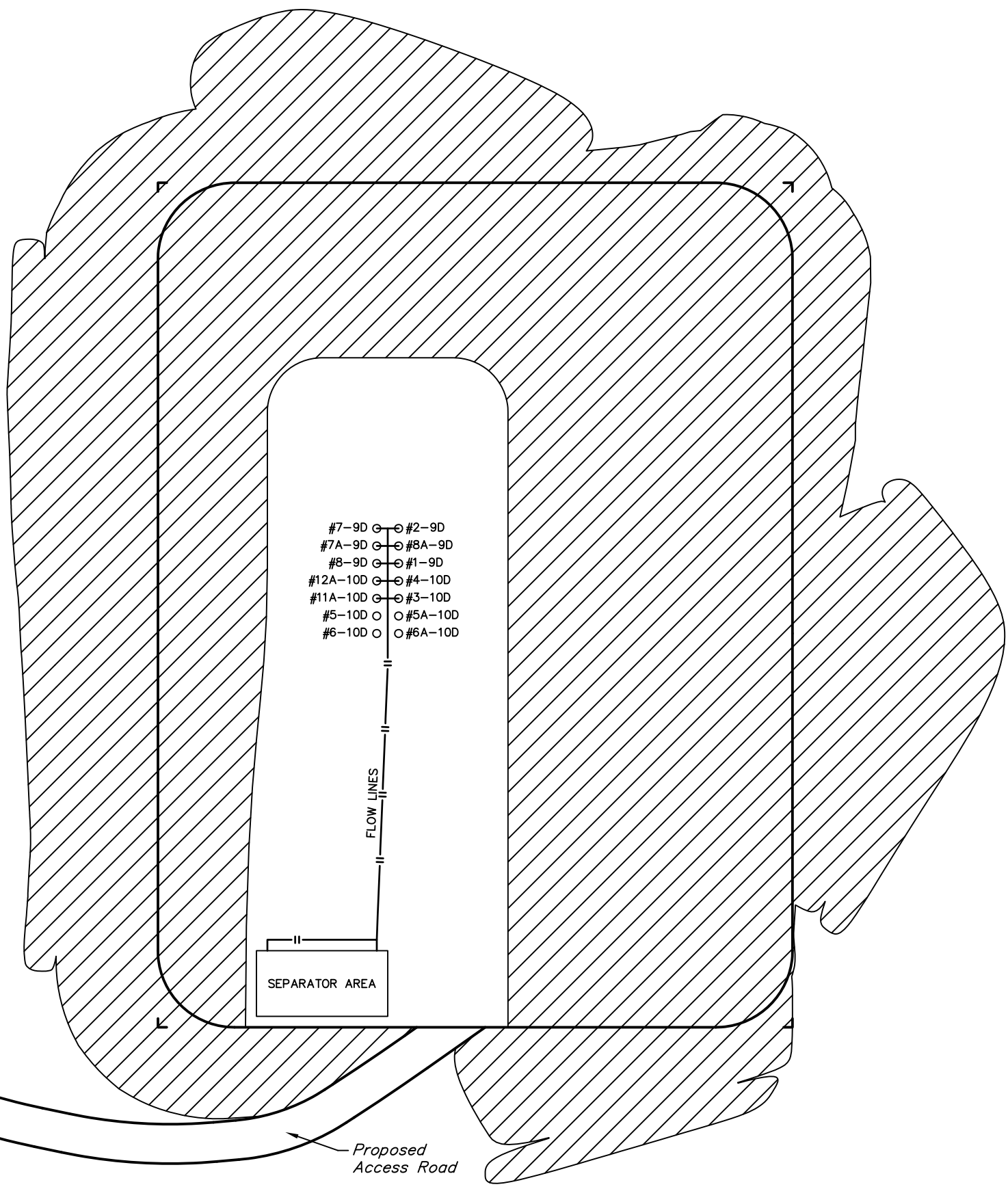

RECLAIMED AREA

UINTAH ENGINEERING & LAND SURVEYING
*85 So. 200 East * Vernal, Utah 84078 * (435) 789-1017*

RECEIVED: May 04, 2012

BILL BARRETT CORPORATION

FIGURE #5

INTERFERENCE DIAGRAM FOR

PRICKLY PEAR UNIT FEDERAL NE 9 PAD

PRICKLY PEAR UNIT FEDERAL #6–10D–12–15, #5–10D–12–15, #11A–10D–12–15, #12A–10D–12–15, #8–9D–12–15, #7A–9D–12–15, #7–9D–12–15, #6A–10D–12–15, #5A–10D–12–15, #3–10D–12–15, #4–10D–12–15, #1–9D–12–15, #8A–9D–12–15 & #2–9D–12–15

SECTION 9, T12S, R15E, S.L.B.&M.

SE 1/4 NE 1/4

SCALE: 1" = 60'
DATE: 04–25–11
DRAWN BY: C.C.

NOTE:
Flare Pit is to be located a min. of 100' from the Well Head.

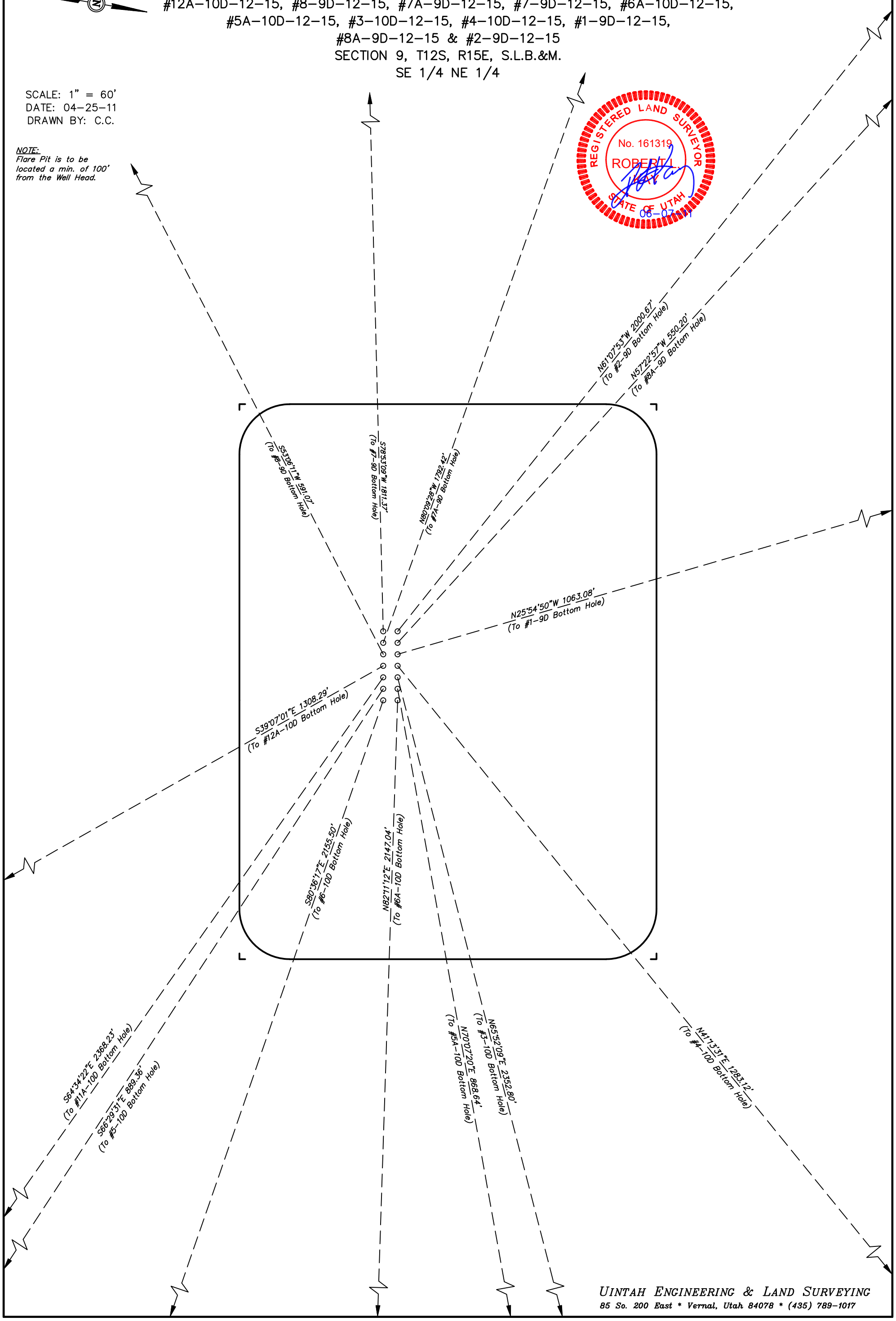

UINTAH ENGINEERING & LAND SURVEYING
85 So. 200 East * Vernal, Utah 84078 * (435) 789–1017

RECEIVED: May 04, 2012

BILL BARRETT CORPORATION

PRICKLY PEAR UNIT FEDERAL NE 9 PAD

PRICKLY PEAR UNIT FEDERAL #6A-10D-12-15, #5A-10D-12-15, #3-10D-12-15, #4-10D-12-15, #1-9D-12-15, #8A-9D-12-15, #2-9D-12-15, #7A-9D-12-15, #6-10D-12-15, #5-10D-12-15, #11A-10D-12-15, #12A-10D-12-15, #8-9D-12-15 & #7-9D-12-15

SECTION 9, T12S, R15E, S.L.B.&M.

PROCEED IN A SOUTHWESTERLY DIRECTION FROM MYTON, UTAH ALONG U.S. HIGHWAY 40 APPROXIMATELY 1.4 MILES TO THE JUNCTION OF THIS ROAD AND AN EXISTING ROAD TO THE SOUTH; TURN LEFT AND PROCEED IN A SOUTHERLY, THEN SOUTHWESTERLY, THEN SOUTHERLY DIRECTION APPROXIMATELY 1.5 MILES TO THE JUNCTION OF THIS ROAD AND AN EXISTING ROAD TO THE SOUTHWEST; TURN RIGHT AND PROCEED IN A SOUTHWESTERLY DIRECTION APPROXIMATELY 28.9 MILES TO THE JUNCTION OF THIS ROAD AND AN EXISTING ROAD TO THE SOUTHWEST; TURN RIGHT AND PROCEED IN A SOUTHWESTERLY, THEN NORTHWESTERLY, THEN SOUTHWESTERLY DIRECTION APPROXIMATELY 5.0 MILES TO THE JUNCTION OF THIS ROAD AND AN EXISTING ROAD TO THE SOUTH; TURN LEFT AND PROCEED IN A SOUTHERLY DIRECTION APPROXIMATELY 3.3 MILES TO THE JUNCTION OF THIS ROAD AND AN EXISTING ROAD TO THE NORTH; TURN LEFT AND PROCEED IN A NORTHERLY, THEN NORTHEASTERLY DIRECTION APPROXIMATELY 1.7 MILES TO THE JUNCTION OF THIS ROAD AND AN EXISTING ROAD TO THE NORTHEAST; TURN LEFT AND PROCEED IN A NORTHEASTERLY, THEN SOUTHEASTERLY DIRECTION APPROXIMATELY 1.0 MILES TO THE JUNCTION OF THIS ROAD AND AN EXISTING ROAD TO THE NORTHEAST; TURN LEFT AND PROCEED IN A NORTHEASTERLY, THEN EASTERLY, THEN NORTHEASTERLY DIRECTION APPROXIMATELY 0.8 MILES TO THE JUNCTION OF THIS ROAD AND AN EXISTING ROAD TO THE EAST; TURN RIGHT AND PROCEED IN AN EASTERLY DIRECTION APPROXIMATELY 0.5 MILES TO THE JUNCTION OF THIS ROAD AND AN EXISTING ROAD TO THE NORTHEAST; TURN LEFT AND PROCEED IN A NORTHEASTERLY, THEN NORTHERLY DIRECTION APPROXIMATELY 0.2 MILES TO THE JUNCTION OF THIS ROAD AND AN EXISTING ROAD TO THE NORTHEAST; TURN RIGHT AND PROCEED IN A NORTHEASTERLY DIRECTION APPROXIMATELY 0.4 MILES TO THE #16-7 PAD LOCATION AND AN EXISTING ROAD TO THE SOUTHEAST; PROCEED IN A SOUTHEASTERLY DIRECTION APPROXIMATELY 0.4 MILES TO THE JUNCTION OF THIS ROAD AND AN EXISTING ROAD TO THE NORTHEAST; TURN LEFT AND PROCEED IN A NORTHEASTERLY, THEN SOUTHEASTERLY, THEN NORTHEASTERLY DIRECTION APPROXIMATELY 0.6 MILES TO THE CENTRAL TANK BATTERY AND SE 8 PAD LOCATION AND THE BEGINNING OF THE PROPOSED ACCESS FOR THE PPUF SE 9 PAD TO THE NORTHEAST, FOLLOW ROAD FLAGS IN A NORTHEASTERLY DIRECTION APPROXIMATELY 5,770’ TO THE PPUF SE 9 PAD AND THE BEGINNING OF THE PROPOSED ACCESS ROAD THE NORTHEAST; FOLLOW ROAD FLAGS IN A NORTHEASTERLY, THEN NORTHERLY DIRECTION APPROXIMATELY 1,986’ TO THE PROPOSED LOCATION.

TOTAL DISTANCE FROM MYTON, UTAH TO THE PROPOSED WELL LOCATION IS APPROXIMATELY 47.1 MILES.

RECEIVED: May 04, 2012

API Well Number: 43007503360000

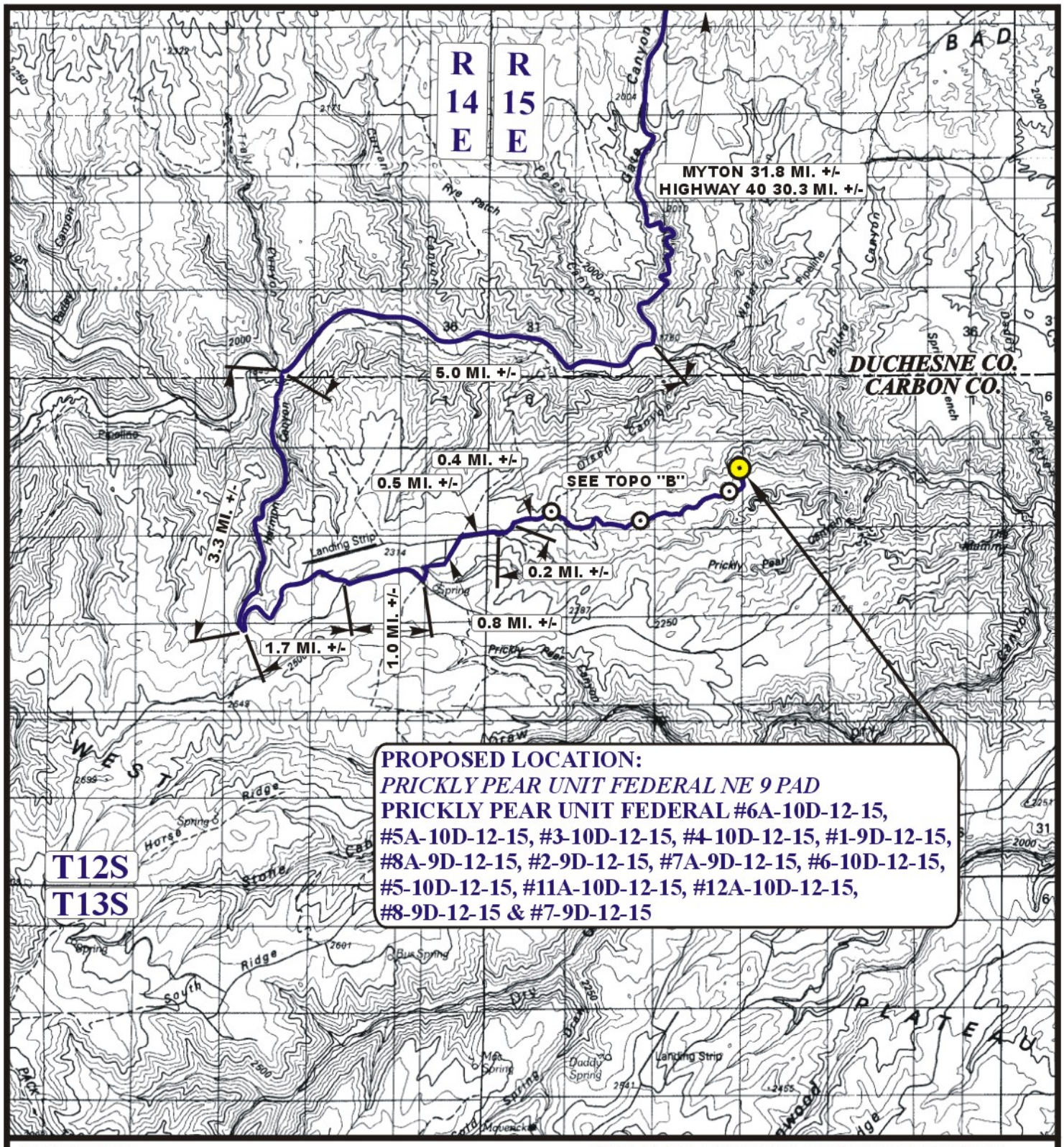

LEGEND:

PROPOSED LOCATION

N

BILL BARRETT CORPORATION

PRICKLY PEAR UNIT FEDERAL 9 PAD
PRICKLY PEAR UNIT FEDERAL #6A-10D-12-15, #5A-10D-12-15, #3-10D-12-15, #4-10D-12-15, #1-9D-12-15, #8A-9D-12-15, #2-9D-12-15, #7A-9D-12-15, #6-10D-12-15, #5-10D-12-15, #11A-10D-12-15, #12A-10D-12-15, #8-9D-12-15 & #7-9D-12-15
SECTION 9, T12S, R15E, S.L.B.&M.
SE 1/4 NE 1/4

Uintah Engineering & Land Surveying
85 South 200 East Vernal, Utah 84078
(435) 789-1017 * FAX (435) 789-1813

ACCESS ROAD MAP	04 MONTH	28 DAY	11 YEAR	A TOPO
SCALE: 1:100,000	DRAWN BY: Z.L.	REVISED: 00-00-00		

API Well Number: 43007503360000

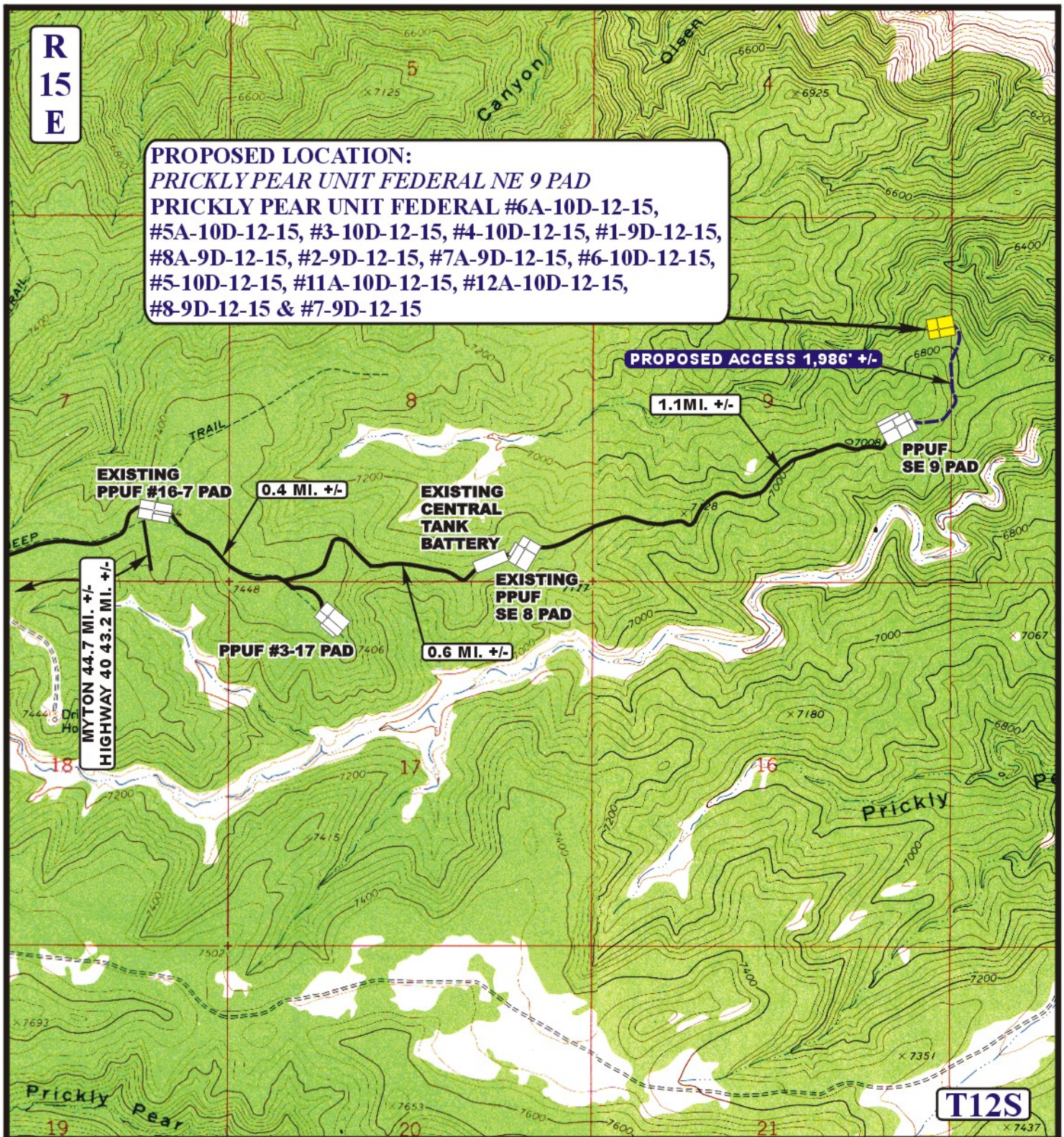

LEGEND:

EXISTING ROAD

PROPOSED ACCESS ROAD

N

BILL BARRETT CORPORATION

PRICKLY PEAR UNIT FEDERAL NE 9 PAD

PRICKLY PEAR UNIT FEDERAL #6A-10D-12-15, #5A-10D-12-15, #3-10D-12-15, #4-10D-12-15, #1-9D-12-15, #8A-9D-12-15, #2-9D-12-15, #7A-9D-12-15, #6-10D-12-15, #5-10D-12-15, #11A-10D-12-15, #12A-10D-12-15, #8-9D-12-15 & #7-9D-12-15

SECTION 9, T12S, R15E, S.L.B.&M.

SE 1/4 NE 1/4

Uintah Engineering & Land Surveying

85 South 200 East Vernal, Utah 84078

(435) 789-1017 * FAX (435) 789-1813

ACCESS ROAD MAP	04 MONTH	28 DAY	11 YEAR	B TOPO
SCALE: 1" = 2000'	DRAWN BY: Z.L.	REV: 02-01-12 C.I.		

API Well Number: 43007503360000

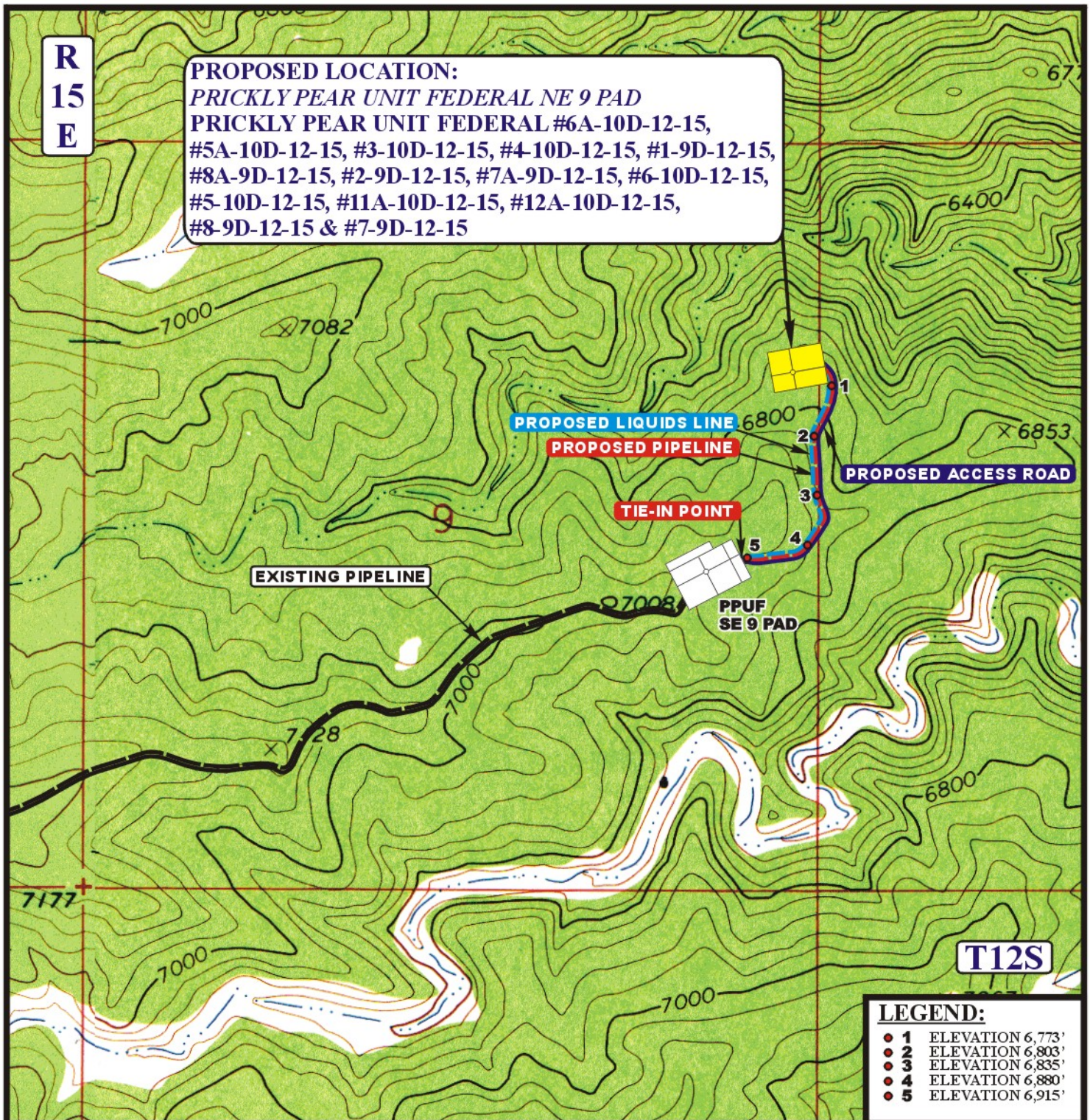

APPROXIMATE TOTAL PIPELINE DISTANCE = 1,919' +/-

LEGEND:

- PROPOSED ACCESS ROAD
- EXISTING PIPELINE
- PROPOSED PIPELINE
- PROPOSED LIQUIDS LINE
- PROPOSED PIPELINE (SERVICING OTHER WELLS)

N

BILL BARRETT CORPORATION

PRICKLY PEAR UNIT FEDERAL NE 9 PAD
PRICKLY PEAR UNIT FEDERAL #6A-10D-12-15, #5A-10D-12-15, #3-10D-12-15, #4-10D-12-15, #1-9D-12-15, #8A-9D-12-15, #2-9D-12-15, #7A-9D-12-15, #6-10D-12-15, #5-10D-12-15, #11A-10D-12-15, #12A-10D-12-15, #8-9D-12-15 & #7-9D-12-15
SECTION 9, T12S, R15E, S.L.B.&M.
SE 1/4 NE 1/4

Uintah Engineering & Land Surveying
85 South 200 East Vernal, Utah 84078
(435) 789-1017 * FAX (435) 789-1813

TOPOGRAPHIC MAP	04 MONTH	28 DAY	11 YEAR	C TOPO
SCALE: 1" = 1000'	DRAWN BY: Z.L.	REV: 02-09-12 C.I.		

Bill Barrett Corporation

Bill Barrett Corp.

Carbon County, UT [NAD27]
Prickly Pear Unit Federal NE 9 Pad
PPUF #5-10D-12-15 - Slot #5-10D

Wellbore #1

Plan: plan2 13oct11 msr

Standard Planning Report

13 October, 2011

RECEIVED: May 04, 2012

API Well Number: 43007503360000

Bill Barrett Corporation

WELL DETAILS: PPUF #5-10D-12-15

KB=22'
Ground Level: 6758.00

+N/-S	+E/-W	Northing	Easting	Latitude	Longitude	Slot
0.00	0.00	533475.43	2356207.44	39° 47' 27.909 N	110° 13' 56.237 W	#5-10D

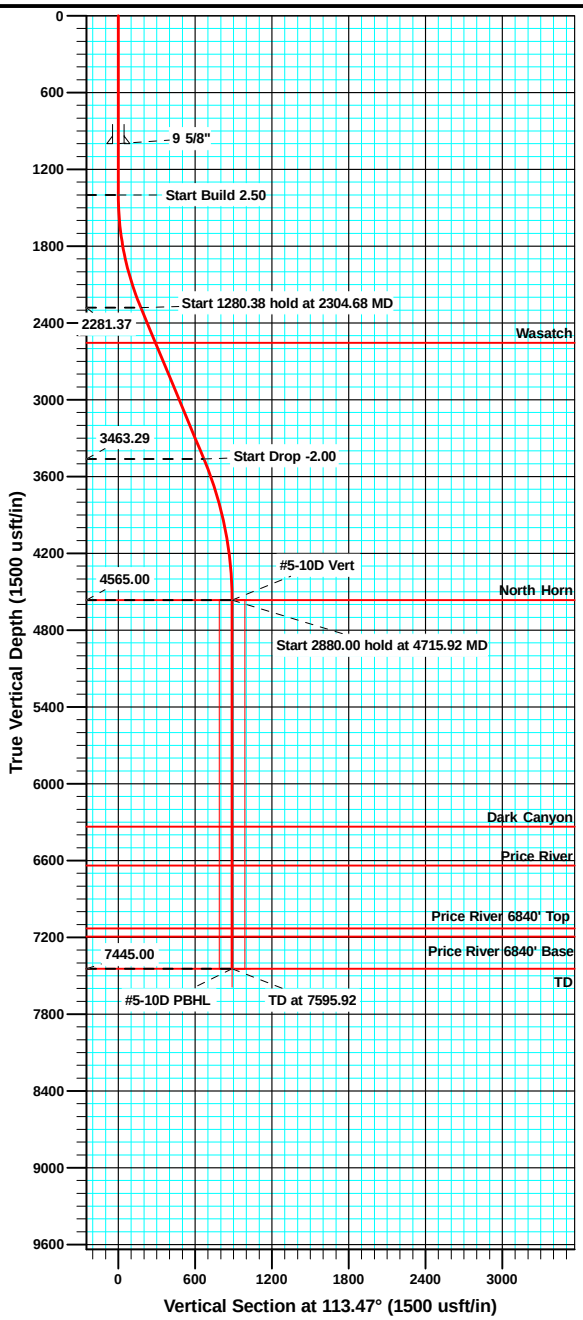

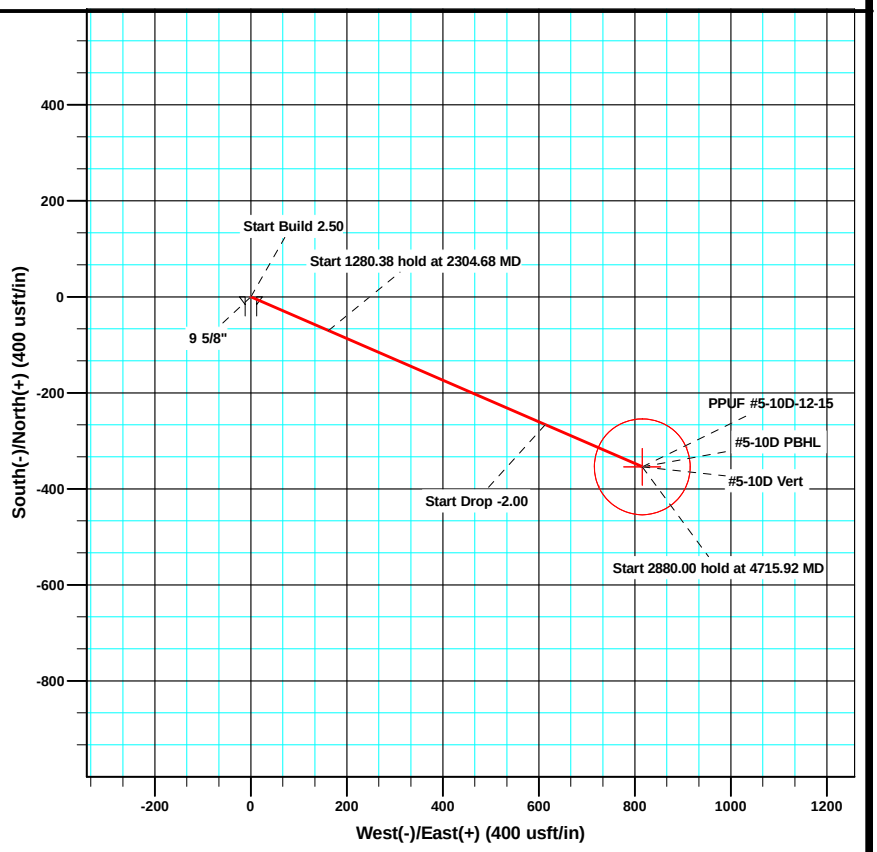

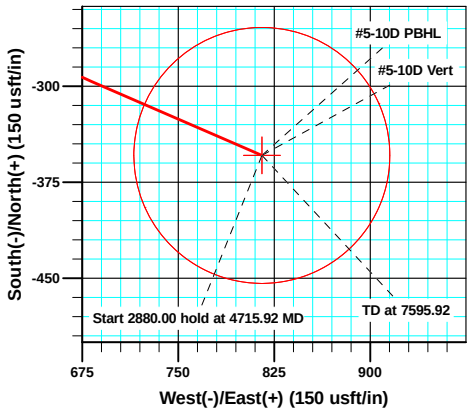

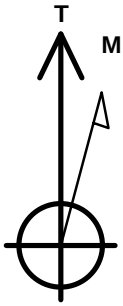

Azimuths to True North
Magnetic North: 11.30°

Magnetic Field
Strength: 52067.2snT
Dip Angle: 65.55°
Date: 10/5/2011
Model: IGRF2010

SECTION DETAILS

MD	Inc	Azi	TVD	+N/-S	+E/-W	DIeg	TFace	VSect	Target
0.00	0.00	0.00	0.00	0.00	0.00	0.00	0.00	0.00	
1400.00	0.00	0.00	1400.00	0.00	0.00	0.00	0.00	0.00	
2304.68	22.62	113.47	2281.37	-70.19	161.67	2.50	113.47	176.25	
3585.07	22.62	113.47	3463.29	-266.28	613.34	0.00	0.00	668.65	
4715.92	0.00	0.00	4565.00	-354.01	815.43	2.00	180.00	888.96	#5-10D Vert
7595.92	0.00	0.00	7445.00	-354.01	815.43	0.00	0.00	888.96	#5-10D PBHL

Sharewell Energy Services, LP

RECEIVED: May 04, 2012

Bill Barrett Corporation

AimWell Services, LLC

Planning Report

Database:	EDM 5000.1 Single User Db	**Local Co-ordinate Reference:**	Well PPUF #5-10D-12-15 - Slot #5-10D
Company:	Bill Barrett Corp.	**TVD Reference:**	KB @ 6780.00usft (KB=22')
Project:	Carbon County, UT [NAD27]	**MD Reference:**	KB @ 6780.00usft (KB=22')
Site:	Prickly Pear Unit Federal NE 9 Pad	**North Reference:**	True
Well:	PPUF #5-10D-12-15	**Survey Calculation Method:**	Minimum Curvature
Wellbore:	Wellbore #1		
Design:	plan2 13oct11 msr		

Project Carbon County, UT [NAD27]

Map System:	US State Plane 1927 (Exact solution)	**System Datum:**	Mean Sea Level
Geo Datum:	NAD 1927 (NADCON CONUS)		
Map Zone:	Utah Central 4302		

Site Prickly Pear Unit Federal NE 9 Pad

Site Position:		**Northing:**	533,480.88 usft	**Latitude:**	39° 47' 27.966 N
From:	Map	**Easting:**	2,356,182.03 usft	**Longitude:**	110° 13' 56.562 W
Position Uncertainty:	0.00 usft	**Slot Radius:**	13-3/16 "	**Grid Convergence:**	0.81 °

Well PPUF #5-10D-12-15 - Slot #5-10D

Well Position	**+N/-S**	-5.81 usft	**Northing:**	533,475.43 usft	**Latitude:**	39° 47' 27.909 N
	+E/-W	25.33 usft	**Easting:**	2,356,207.44 usft	**Longitude:**	110° 13' 56.237 W
Position Uncertainty		0.00 usft	**Wellhead Elevation:**		**Ground Level:**	6,758.00 usft

Wellbore Wellbore #1

Magnetics	Model Name	Sample Date	Declination (°)	Dip Angle (°)	Field Strength (nT)
	IGRF2010	10/5/2011	11.30	65.55	52,067

Design plan2 13oct11 msr

Audit Notes:

Version:		**Phase:**	PLAN	**Tie On Depth:**	0.00

Vertical Section:	Depth From (TVD) (usft)	+N/-S (usft)	+E/-W (usft)	Direction (°)
	0.00	0.00	0.00	113.47

Plan Sections

Measured Depth (usft)	Inclination (°)	Azimuth (°)	Vertical Depth (usft)	+N/-S (usft)	+E/-W (usft)	Dogleg Rate (°/100usft)	Build Rate (°/100usft)	Turn Rate (°/100usft)	TFO (°)	Target
0.00	0.00	0.00	0.00	0.00	0.00	0.00	0.00	0.00	0.00	
1,400.00	0.00	0.00	1,400.00	0.00	0.00	0.00	0.00	0.00	0.00	
2,304.68	22.62	113.47	2,281.37	-70.19	161.67	2.50	2.50	0.00	113.47	
3,585.07	22.62	113.47	3,463.29	-266.28	613.34	0.00	0.00	0.00	0.00	
4,715.92	0.00	0.00	4,565.00	-354.01	815.43	2.00	-2.00	0.00	180.00	#5-10D Vert
7,595.92	0.00	0.00	7,445.00	-354.01	815.43	0.00	0.00	0.00	0.00	#5-10D PBHL

RECEIVED: May 04, 2012

Bill Barrett Corporation

AimWell Services, LLC

Planning Report

Database:	EDM 5000.1 Single User Db	**Local Co-ordinate Reference:**	Well PPUF #5-10D-12-15 - Slot #5-10D
Company:	Bill Barrett Corp.	**TVD Reference:**	KB @ 6780.00usft (KB=22')
Project:	Carbon County, UT [NAD27]	**MD Reference:**	KB @ 6780.00usft (KB=22')
Site:	Prickly Pear Unit Federal NE 9 Pad	**North Reference:**	True
Well:	PPUF #5-10D-12-15	**Survey Calculation Method:**	Minimum Curvature
Wellbore:	Wellbore #1		
Design:	plan2 13oct11 msr		

Planned Survey

Measured Depth (usft)	Inclination (°)	Azimuth (°)	Vertical Depth (usft)	+N/-S (usft)	+E/-W (usft)	Vertical Section (usft)	Dogleg Rate (°/100usft)	Build Rate (°/100usft)	Turn Rate (°/100usft)
0.00	0.00	0.00	0.00	0.00	0.00	0.00	0.00	0.00	0.00
100.00	0.00	0.00	100.00	0.00	0.00	0.00	0.00	0.00	0.00
200.00	0.00	0.00	200.00	0.00	0.00	0.00	0.00	0.00	0.00
300.00	0.00	0.00	300.00	0.00	0.00	0.00	0.00	0.00	0.00
400.00	0.00	0.00	400.00	0.00	0.00	0.00	0.00	0.00	0.00
500.00	0.00	0.00	500.00	0.00	0.00	0.00	0.00	0.00	0.00
600.00	0.00	0.00	600.00	0.00	0.00	0.00	0.00	0.00	0.00
700.00	0.00	0.00	700.00	0.00	0.00	0.00	0.00	0.00	0.00
800.00	0.00	0.00	800.00	0.00	0.00	0.00	0.00	0.00	0.00
900.00	0.00	0.00	900.00	0.00	0.00	0.00	0.00	0.00	0.00
1,000.00	0.00	0.00	1,000.00	0.00	0.00	0.00	0.00	0.00	0.00
9 5/8"									
1,100.00	0.00	0.00	1,100.00	0.00	0.00	0.00	0.00	0.00	0.00
1,200.00	0.00	0.00	1,200.00	0.00	0.00	0.00	0.00	0.00	0.00
1,300.00	0.00	0.00	1,300.00	0.00	0.00	0.00	0.00	0.00	0.00
1,400.00	0.00	0.00	1,400.00	0.00	0.00	0.00	0.00	0.00	0.00
Start Build 2.50									
1,500.00	2.50	113.47	1,499.97	-0.87	2.00	2.18	2.50	2.50	0.00
1,600.00	5.00	113.47	1,599.75	-3.47	8.00	8.72	2.50	2.50	0.00
1,700.00	7.50	113.47	1,699.14	-7.81	17.99	19.61	2.50	2.50	0.00
1,800.00	10.00	113.47	1,797.97	-13.87	31.94	34.82	2.50	2.50	0.00
1,900.00	12.50	113.47	1,896.04	-21.63	49.83	54.33	2.50	2.50	0.00
2,000.00	15.00	113.47	1,993.17	-31.10	71.63	78.09	2.50	2.50	0.00
2,100.00	17.50	113.47	2,089.17	-42.24	97.30	106.07	2.50	2.50	0.00
2,200.00	20.00	113.47	2,183.85	-55.04	126.78	138.21	2.50	2.50	0.00
2,304.68	22.62	113.47	2,281.37	-70.19	161.67	176.25	2.50	2.50	0.00
Start 1280.38 hold at 2304.68 MD									
2,400.00	22.62	113.47	2,369.36	-84.79	195.30	212.91	0.00	0.00	0.00
2,500.00	22.62	113.47	2,461.67	-100.10	230.57	251.37	0.00	0.00	0.00
2,600.00	22.62	113.47	2,553.98	-115.42	265.85	289.82	0.00	0.00	0.00
2,601.11	22.62	113.47	2,555.00	-115.59	266.24	290.25	0.00	0.00	0.00
Wasatch									
2,700.00	22.62	113.47	2,646.29	-130.73	301.13	328.28	0.00	0.00	0.00
2,800.00	22.62	113.47	2,738.60	-146.05	336.40	366.74	0.00	0.00	0.00
2,900.00	22.62	113.47	2,830.90	-161.36	371.68	405.19	0.00	0.00	0.00
3,000.00	22.62	113.47	2,923.21	-176.67	406.95	443.65	0.00	0.00	0.00
3,100.00	22.62	113.47	3,015.52	-191.99	442.23	482.11	0.00	0.00	0.00
3,200.00	22.62	113.47	3,107.83	-207.30	477.51	520.56	0.00	0.00	0.00
3,300.00	22.62	113.47	3,200.14	-222.62	512.78	559.02	0.00	0.00	0.00
3,400.00	22.62	113.47	3,292.45	-237.93	548.06	597.48	0.00	0.00	0.00
3,500.00	22.62	113.47	3,384.76	-253.25	583.33	635.94	0.00	0.00	0.00
3,585.07	22.62	113.47	3,463.29	-266.28	613.34	668.65	0.00	0.00	0.00
Start Drop -2.00									
3,600.00	22.32	113.47	3,477.09	-268.55	618.58	674.36	2.00	-2.00	0.00
3,700.00	20.32	113.47	3,570.24	-283.03	651.92	710.71	2.00	-2.00	0.00
3,800.00	18.32	113.47	3,664.60	-296.20	682.27	743.79	2.00	-2.00	0.00
3,900.00	16.32	113.47	3,760.07	-308.05	709.57	773.56	2.00	-2.00	0.00
4,000.00	14.32	113.47	3,856.51	-318.57	733.80	799.97	2.00	-2.00	0.00
4,100.00	12.32	113.47	3,953.81	-327.75	754.93	823.01	2.00	-2.00	0.00
4,200.00	10.32	113.47	4,051.86	-335.56	772.94	842.63	2.00	-2.00	0.00
4,300.00	8.32	113.47	4,150.54	-342.01	787.79	858.83	2.00	-2.00	0.00
4,400.00	6.32	113.47	4,249.72	-347.08	799.47	871.56	2.00	-2.00	0.00
4,500.00	4.32	113.47	4,349.28	-350.77	807.97	880.83	2.00	-2.00	0.00
4,600.00	2.32	113.47	4,449.11	-353.08	813.28	886.62	2.00	-2.00	0.00

RECEIVED: May 04, 2012

Bill Barrett Corporation

AimWell Services, LLC

Planning Report

Database:	EDM 5000.1 Single User Db	**Local Co-ordinate Reference:**	Well PPUF #5-10D-12-15 - Slot #5-10D
Company:	Bill Barrett Corp.	**TVD Reference:**	KB @ 6780.00usft (KB=22')
Project:	Carbon County, UT [NAD27]	**MD Reference:**	KB @ 6780.00usft (KB=22')
Site:	Prickly Pear Unit Federal NE 9 Pad	**North Reference:**	True
Well:	PPUF #5-10D-12-15	**Survey Calculation Method:**	Minimum Curvature
Wellbore:	Wellbore #1		
Design:	plan2 13oct11 msr		

Planned Survey

Measured Depth (usft)	Inclination (°)	Azimuth (°)	Vertical Depth (usft)	+N/-S (usft)	+E/-W (usft)	Vertical Section (usft)	Dogleg Rate (°/100usft)	Build Rate (°/100usft)	Turn Rate (°/100usft)
4,700.00	0.32	113.47	4,549.08	-353.99	815.39	888.92	2.00	-2.00	0.00
4,715.92	0.00	0.00	4,565.00	-354.01	815.43	888.96	2.00	-2.00	0.00
Start 2880.00 hold at 4715.92 MD - North Horn									
4,800.00	0.00	0.00	4,649.08	-354.01	815.43	888.96	0.00	0.00	0.00
4,900.00	0.00	0.00	4,749.08	-354.01	815.43	888.96	0.00	0.00	0.00
5,000.00	0.00	0.00	4,849.08	-354.01	815.43	888.96	0.00	0.00	0.00
5,100.00	0.00	0.00	4,949.08	-354.01	815.43	888.96	0.00	0.00	0.00
5,200.00	0.00	0.00	5,049.08	-354.01	815.43	888.96	0.00	0.00	0.00
5,300.00	0.00	0.00	5,149.08	-354.01	815.43	888.96	0.00	0.00	0.00
5,400.00	0.00	0.00	5,249.08	-354.01	815.43	888.96	0.00	0.00	0.00
5,500.00	0.00	0.00	5,349.08	-354.01	815.43	888.96	0.00	0.00	0.00
5,600.00	0.00	0.00	5,449.08	-354.01	815.43	888.96	0.00	0.00	0.00
5,700.00	0.00	0.00	5,549.08	-354.01	815.43	888.96	0.00	0.00	0.00
5,800.00	0.00	0.00	5,649.08	-354.01	815.43	888.96	0.00	0.00	0.00
5,900.00	0.00	0.00	5,749.08	-354.01	815.43	888.96	0.00	0.00	0.00
6,000.00	0.00	0.00	5,849.08	-354.01	815.43	888.96	0.00	0.00	0.00
6,100.00	0.00	0.00	5,949.08	-354.01	815.43	888.96	0.00	0.00	0.00
6,200.00	0.00	0.00	6,049.08	-354.01	815.43	888.96	0.00	0.00	0.00
6,300.00	0.00	0.00	6,149.08	-354.01	815.43	888.96	0.00	0.00	0.00
6,400.00	0.00	0.00	6,249.08	-354.01	815.43	888.96	0.00	0.00	0.00
6,485.92	0.00	0.00	6,335.00	-354.01	815.43	888.96	0.00	0.00	0.00
Dark Canyon									
6,500.00	0.00	0.00	6,349.08	-354.01	815.43	888.96	0.00	0.00	0.00
6,600.00	0.00	0.00	6,449.08	-354.01	815.43	888.96	0.00	0.00	0.00
6,700.00	0.00	0.00	6,549.08	-354.01	815.43	888.96	0.00	0.00	0.00
6,790.92	0.00	0.00	6,640.00	-354.01	815.43	888.96	0.00	0.00	0.00
Price River									
6,800.00	0.00	0.00	6,649.08	-354.01	815.43	888.96	0.00	0.00	0.00
6,900.00	0.00	0.00	6,749.08	-354.01	815.43	888.96	0.00	0.00	0.00
7,000.00	0.00	0.00	6,849.08	-354.01	815.43	888.96	0.00	0.00	0.00
7,100.00	0.00	0.00	6,949.08	-354.01	815.43	888.96	0.00	0.00	0.00
7,200.00	0.00	0.00	7,049.08	-354.01	815.43	888.96	0.00	0.00	0.00
7,280.92	0.00	0.00	7,130.00	-354.01	815.43	888.96	0.00	0.00	0.00
Price River 6840' Top									
7,300.00	0.00	0.00	7,149.08	-354.01	815.43	888.96	0.00	0.00	0.00
7,345.92	0.00	0.00	7,195.00	-354.01	815.43	888.96	0.00	0.00	0.00
Price River 6840' Base									
7,400.00	0.00	0.00	7,249.08	-354.01	815.43	888.96	0.00	0.00	0.00
7,500.00	0.00	0.00	7,349.08	-354.01	815.43	888.96	0.00	0.00	0.00
7,595.92	0.00	0.00	7,445.00	-354.01	815.43	888.96	0.00	0.00	0.00
TD at 7595.92 - TD									

RECEIVED: May 04, 2012

Bill Barrett Corporation

AimWell Services, LLC

Planning Report

Database:	EDM 5000.1 Single User Db	**Local Co-ordinate Reference:**	Well PPUF #5-10D-12-15 - Slot #5-10D
Company:	Bill Barrett Corp.	**TVD Reference:**	KB @ 6780.00usft (KB=22')
Project:	Carbon County, UT [NAD27]	**MD Reference:**	KB @ 6780.00usft (KB=22')
Site:	Prickly Pear Unit Federal NE 9 Pad	**North Reference:**	True
Well:	PPUF #5-10D-12-15	**Survey Calculation Method:**	Minimum Curvature
Wellbore:	Wellbore #1		
Design:	plan2 13oct11 msr		

Design Targets

Target Name - hit/miss target - Shape	Dip Angle (°)	Dip Dir. (°)	TVD (usft)	+N/-S (usft)	+E/-W (usft)	Northing (usft)	Easting (usft)	Latitude	Longitude
#5-10D Vert - plan hits target center - Point	0.00	0.00	4,565.00	-354.01	815.43	533,133.01	2,357,027.81	39° 47' 24.410 N	110° 13' 45.790 W
#5-10D PBHL - plan hits target center - Circle (radius 100.00)	0.00	0.00	7,445.00	-354.01	815.43	533,133.01	2,357,027.81	39° 47' 24.410 N	110° 13' 45.790 W

Casing Points

Measured Depth (usft)	Vertical Depth (usft)	Name	Casing Diameter (")	Hole Diameter (")
1,000.00	1,000.00	9 5/8"	9-5/8	12-1/4

Formations

Measured Depth (usft)	Vertical Depth (usft)	Name	Lithology	Dip (°)	Dip Direction (°)
2,601.11	2,555.00	Wasatch		0.00	
4,715.92	4,565.00	North Horn		0.00	
6,485.92	6,335.00	Dark Canyon		0.00	
6,790.92	6,640.00	Price River		0.00	
7,280.92	7,130.00	Price River 6840' Top		0.00	
7,345.92	7,195.00	Price River 6840' Base		0.00	
7,595.92	7,445.00	TD		0.00	

Plan Annotations

Measured Depth (usft)	Vertical Depth (usft)	Local Coordinates +N/-S (usft)	Local Coordinates +E/-W (usft)	Comment
1,400.00	1,400.00	0.00	0.00	Start Build 2.50
2,304.68	2,281.37	-70.19	161.67	Start 1280.38 hold at 2304.68 MD
3,585.07	3,463.29	-266.28	613.34	Start Drop -2.00
4,715.92	4,565.00	-354.01	815.43	Start 2880.00 hold at 4715.92 MD
7,595.92	7,445.00	-354.01	815.43	TD at 7595.92

RECEIVED: May 04, 2012

SURFACE USE PLAN

BILL BARRETT CORPORATION
Prickly Pear Unit Federal NE Sec. 9-12-15 Pad SUP
Carbon County, UT

Prickly Pear Unit Federal 1-9D-12-15 SENE, 1616' FNL, 173' FEL, Sec. 9, T12S-R15E (surface hole) NENE, 659' FNL, 638' FEL, Sec. 9, T12S-R15E (bottom hole)	**Prickly Pear Unit Federal 2-9D-12-15** SENE, 1619' FNL, 189' FEL, Sec. 9, T12S-R15E (surface hole) NWNE, 650' FNL, 1941' FEL, Sec. 9, T12S-R15E (bottom hole)
Prickly Pear Unit Federal 7-9D-12-15 SENE, 1629' FNL, 187' FEL, Sec. 9, T12S-R15E (surface hole) SWNE, 1975' FNL, 1965' FEL, Sec. 9, T12S-R15E (bottom hole)	**Prickly Pear Unit Federal 7A-9D-12-15** SENE, 1627' FNL, 180' FEL, Sec. 9, T12S-R15E (surface hole) SWNE, 1318' FNL, 1945' FEL, Sec. 9, T12S-R15E (bottom hole)
Prickly Pear Unit Federal 8-9D-12-15 SENE, 1626' FNL, 172' FEL, Sec. 9, T12S-R15E (surface hole) SENE, 1980' FNL, 644' FEL, Sec. 9, T12S-R15E (bottom hole)	**Prickly Pear Unit Federal 8A-9D-12-15** SENE, 1618' FNL, 181' FEL, Sec. 9, T12S-R15E (surface hole) SENE, 1320' FNL, 645' FEL, Sec. 9, T12S-R15E (bottom hole)
Prickly Pear Unit Federal 3-10D-12-15 SENE, 1614' FNL, 158' FEL, Sec. 9, T12S-R15E (surface hole) NENW, 659' FNL, 1990' FWL, Sec. 10, T12S-R15E (bottom hole)	**Prickly Pear Unit Federal 4-10D-12-15** SENE, 1615' FNL, 165' FEL, Sec. 9, T12S-R15E (surface hole) NWNW, 653' FNL, 681' FWL, Sec. 10, T12S-R15E (bottom hole)
Prickly Pear Unit Federal 5-10D-12-15 SENE, 1622' FNL, 148' FEL, Sec. 9, T12S-R15E (surface hole) SWNW, 1979' FNL, 667' FWL, Sec. 10, T12S-R15E (bottom hole)	**Prickly Pear Unit Federal 5A-10D-12-15** SENE, 1612' FNL, 150' FEL, Sec. 9, T12S-R15E (surface hole) SWNW, 1320' FNL, 667' FWL, Sec. 10, T12S-R15E (bottom hole)
Prickly Pear Unit Federal 6-10D-12-15 SENE, 1621' FNL, 140' FEL, Sec. 9, T12S-R15E (surface hole) SENW, 1980' FNL, 1986' FWL, Sec. 10, T12S-R15E (bottom hole)	**Prickly Pear Unit Federal 6A-10D-12-15** SENE, 1611' FNL, 142' FEL, Sec. 9, T12S-R15E (surface hole) SENW, 1326' FNL, 1985' FWL, Sec. 10, T12S-R15E (bottom hole)
Prickly Pear Unit Federal 11A-10D-12-15 SENE, 1623' FNL, 156' FEL, Sec. 9, T12S-R15E (surface hole) NESW, 2627' FSL, 1983' FWL, Sec. 10, T12S-R15E (bottom hole)	**Prickly Pear Unit Federal 12A-10D-12-15** SENE, 1625' FNL, 164' FEL, Sec. 9, T12S-R15E (surface hole) NWSW, 2631' FSL, 661' FWL, Sec. 10, T12S-R15E (bottom hole)

This is a new pad with a total of FOURTEEN directional wells proposed to be drilled in one phase. The onsite for this pad took place on October 11th and 12th, 2011.

The excavation contractor would be provided with an approved copy of the surface use plan of operations before initiating construction.

1. Existing Roads:

   a. The proposed pad is located approximately 47.1 miles from Myton, Utah. Maps reflecting directions to the proposed pad are included (see Topographic maps A and B).

   b. The use of roads under State and County Road Department maintenance is necessary to access the Prickly Pear Unit. However, an encroachment permit is not anticipated as there are no upgrades to the State or County road systems proposed at this time.

`

   c. No topsoil stripping would occur as there are no improvements proposed to existing State, County or main BLM access roads.

   d. Project roads would require routine year-round maintenance to provide year-round access. Maintenance would include inspections, reduction of ruts and holes, maintenance to keep water off the road, replacement of surfacing materials, and clearing of sediment blocking ditches and culverts. Should snow removal become necessary, roads would be cleared with a scraper and snow would be stored along the down gradient side to prohibit runoff onto the road. Aggregate would be used as necessary to maintain a solid running surface and minimize dust generation.

   e. Vehicle operators would obey posted speed restrictions and observe safe speeds commensurate with road and weather conditions. Travel would be limited to the existing access roads and proposed access road.

   f. To address safety-related traffic concerns, drivers and rig crews would be advised of the hazards to recreational traffic along the existing and proposed access roads, as well as hazards present due to blind corners, cars parked on the road, pedestrian traffic, and mountain bikers. In addition, appropriate signs would be erected to warn non-project personnel about traffic hazards associated

RECEIVED: May 04, 2012

with project-related activities and during times of rig moves, when there is heavy equipment, traffic may be controlled on sections of roads. Traffic would be controlled using roadside signs, flagmen, and barricades as appropriate.

g. Dust suppression and monitoring would be implemented where necessary and as prescribed by the BLM.

h. An off-lease federal right-of-way for the access road and utility corridor is not anticipated at this time since existing roads are being utilized into the Prickly Pear Unit area. All new construction would be within the Unit.

2. Planned Access Road:

a. From the existing Interplanetary airstrip road, BBC would traverse east on an existing access road, pass through the existing Prickly Pear SE 9 well pad. From there, approximately 1986' ft of proposed new road would be required within the Prickly Pear Unit (see Topographic Map B). A road design plan is not anticipated at this time. See 12.d for disturbance totals.

b. The new proposed access road would be co-located by pipeline(s) and the requested corridor disturbance would be 100 ft with a short-term corridor disturbance of 80 reclaimed to a long-term corridor of 30 ft.

c. The proposed road would be constructed to facilitate drainage, control erosion and minimize visual impacts by following natural contours where practical. No unnecessary side-casting of material would occur on steep slopes.

d. Intervisible turnouts would be constructed, where necessary and as topographic conditions allow, in order to improve traffic safety. A maximum grade of 10 percent would be maintained with minimum cuts and fills, as necessary, to access the well pad.

e. New road construction and improvements of existing roads would typically require the use of motorgraders, crawler tractors, 10-yard end dump trucks, and water trucks. The standard methodology for building new roads involves the use of a crawler tractor or track hoe to windrow the vegetation to one side of the road corridor, remove topsoil to the opposing side of the corridor, and rough-in the roadway. This is followed by a grader or bulldozer to establish barrow ditches and crown the road surface. Where culverts are required, a track hoe or backhoe would trench the road and install the culverts. Some hand labor would be required when installing and armoring culverts. Road base or gravel in some instances would be necessary and would be hauled in and a grader used to smooth the running surface.

f. Excess rock from construction of the pad may be used for surfacing of the access road if necessary. Any additional aggregate necessary would be obtained from private, State of Utah, or federal lands in conformance with applicable regulations. Aggregate would be of sufficient size, type, and amount to allow all weather access and alleviate dust.

g. Where topsoil removal is necessary, it would be windrowed (i.e. stockpiled/accumulated along the edge of the ROW and in a low row/pile parallel with the ROW) and re-spread over the disturbed area after construction and backfilling are completed. Vegetation removed from the disturbed area would also be re-spread to provide protection, nutrient recycling, and a seed source for reclamation.

h. Adequate drainage structures would be incorporated and culverts, with a minimum diameter of 18 inches, would be installed as necessary.

i. No gates or cattle guards are anticipated at this time.

j. Surface disturbance and vehicular travel would be limited to the approved location access road. Adequate signs would be posted, as necessary, to warn the public of project related traffic.

RECEIVED: May 04, 2012

k. All access roads and surface disturbing activities would conform to the appropriate standard, no higher than necessary, to accommodate their intended function adequately as outlined in the Bureau of Land Management and Forest Service publication: Surface Operating Standards for Oil and Gas Exploration and Development, Fourth Edition – Revised 2007. BBC would be responsible for all maintenance of the access road.

3. Location of Existing Wells (see One-Mile Radius Map):

a. Following is a list of wells with surface hole locations within a one-mile radius of the proposed pad:

i.	water wells	none
ii.	injection wells	none
iii.	disposal wells	none
iv.	drilling wells	none
v.	temp shut-in wells	none
vi.	producing wells	eight
vii.	abandoned wells	none

4. Location of Production Facilities:

a. Each proposed well would have its own meter run and separator. Proposed wellheads and christmas trees **may be** contained below location grade in pre-cast concrete trenches. All wellheads associated with the drilling operations for this pad may be contained in the same trench measuring approximately 26 ft wide, 10 ft deep, and 72 ft long (# wells x 8 ft + 16 ft for two end pieces). Drawings of below ground cellars can be provided by BBC upon request

b. Tank facilities for this pad would be a centralized tank battery facility (CTB) that is co-located on the SE 9 pad and liquids would be pumped to the Prickly Pear 4-18 CTB/well pad located in the NWNW, Sec. 18, 12S-15E and trucked from that location. Surface facilities for wells consist of one 9x15.5 300 BBL blow down tank, one line heater, multiple chemical tanks, two glycol solar pumps, multiple chemical solar pumps, multiple 500gl methanol tanks and solar pumps, and a possible gas lift compressor measuring 20'x8'4". As all of the wells on this pad are outside of the PA, production would be combined in non-PA tanks while production on the NE 8 CTB and for PA wells flowing into the CTB on the SE 7 CTB, would be combined in a separate set of tanks. Figure 4 reflects facility plans and is attached. Prickly Pear SE 9 pad CTB has up to ten 625-bbl tanks and one 300-bbl low profile tank for the production of wells on that pad and the proposed NE 9 pad.

c. CTBs would be surrounded by a secondary containment berm of sufficient capacity to contain the 1.1 times the entire capacity of the largest single tank and sufficient freeboard to contain precipitation. All loading lines and valves would be placed inside the berm surrounding the CTB or would utilize catchment basins to contain spills. All liquid hydrocarbon production and measurement shall conform to the provisions of 43 CFR 3162.7-2 and Onshore Oil and Gas Order No. 4 for the measurement of oil. Any variances from this would be submitted via a sundry notice. BBC requests permission to install the necessary production/operation facilities with this application.

d. Most wells would be fitted with plunger lift systems to assist liquid production. However, pump jacks may be used if liquid volumes and/or low formation pressures require it. Plunger lift systems do not require any outside source of energy. The prime mover for pump jacks would be small (75 horsepower or less), natural gas-fired internal combustion engines.

e. Gas meter run(s) would be constructed and located on lease within 500 feet of the wellheads. Meter runs would be housed and/or fenced. As practicably feasible, meters would be equipped with remote telemetry monitoring systems. All gas production and measurement shall comply with the provisions of 43 CFR 3162.7-3, Onshore Oil and Gas Order No. 5, and American Gas Association (AGA) Report No. 3 and any variances would be included with this submittal or submitted via sundry notice.

RECEIVED: May 04, 2012

f. A combustor exists on the Prickly Pear 4-18 well pad/CTB. A combustor ranges from 24 inches to 48 inches wide and is approximately 10 ft -27 ft tall. Combustor placement would be on existing disturbance and would not be closer than 100 ft to any tank or wellhead(s).

g. A gas gathering pipeline (up to 12 inch diameter) and one liquids lines (up to 6 inch diameter), approximately 1919 feet in length, are associated with this application and are being applied for at this time (see Topographic Map C). All lines would leave the east end of the pad and would tie into the SE 9 lines and would then transport the liquids to the 4-18 well pad/CTB. Disturbances for the new co-located pipeline are included in 12.d below.

h. The proposed new gas pipeline would be constructed of steel while the liquids lines would be constructed of steel, polyethylene, or fiberglass. The gas pipeline and liquids line would be buried, where soil conditions permit, within the proposed co-located access road and pipeline corridor.

i. Although BBC intends on burying the new proposed pipelines, burial of pipelines would depend upon the site-specific topographic and soil conditions and operational requirements. If bedrock was encountered, BBC would contact the Authorized Officer at the time of construction to discuss further.

j. BBC intends on stringing the pipeline on the surface, welding many joints into long lengths, dragging the long lengths into position and then completing a final welding pass to join the long lengths together. The welded joints would either remain on the surface or would be placed within the trench, depending on the scenario. BBC intends on connecting the pipeline together utilizing conventional welding technology.

k. Pipeline construction methods and practices would be planned and conducted by BBC with the objective of enhancing reclamation and fostering the re-establishment of the native plant community.

l. To limit erosion potential, backfill over pipeline trenches would be compacted so as not to extend above the original ground level after the fill has settled. Wheel or other methods of compacting backfill would be utilized as practicably feasible to reduce trench settling and water channeling.

m. All **permanent** above-ground structures would be painted a flat, non-reflective Olive Black to match the standard environmental colors. These structures would be painted the designated color at the time of installation or within 6 months of being located on site. Facilities that are required to comply with the Occupational Safety and Health Act (OSHA) may be excluded.

n. Site security guidelines identified in 43 CFR 3162.7-5 and Onshore Oil and Gas Order No. 3 would be adhered to. Any changes to facilities proposed within this surface use plan would be depicted on the site security diagram submitted.

o. The site would require periodic maintenance to ensure that drainages are kept open and free of debris, and that surfaces are properly treated to reduce erosion, fugitive dust, and impacts to adjacent areas.

5. <u>Location and Type of Water Supply:</u>

a. Bill Barrett Corporation would use water consistent with approvals granted by the Utah State Engineer's Office under:

Application Number 90-1866, expires December 31, 2020
Application Number 90-1868, expires April 25, 2012
Application Number 90-1869, expires April 25, 2012
Application Number 90-1870, expires October 12, 2012
Application Number 90-1874, expires January 5, 2013
Application Number 90-4, expires December 31, 2015
Application Number 90-5, expires January 31, 2018

RECEIVED: May 04, 2012

b. Water use for this location would most likely be diverted from Nine Mile Creek, the N¼ of Section 3, T12S-R14E. Bobtail trucks would haul the water, traveling Prickly Pear road to Harmon Canyon, traveling north to this point of diversion.

c. Water use would vary in accordance with the formations to be drilled but would average approximately 1 acre-foot (7,758 barrels) during drilling operations and 1 acre-foot (7,758 barrels) during completion operations.

6. Source of Construction Material:

a. The use of materials would conform to 43 CFR 3610.2-3.

b. No construction materials would be taken out of the Prickly Pear Unit.

c. If any additional gravel is required, it would be obtained from SITLA materials permits, federal BBC locations within the Prickly Pear unit or from private sources.

7. Methods of Handling Waste Disposal:

a. All wastes associated with this application would be contained and disposed of utilizing approved facilities.

Closed Loop Drilling System

b. BBC intends to employ a closed loop drilling system in which drilling fluids and cuttings would be thoroughly processed such that the separated cuttings are relatively dry. See 7.e below for more information on the cuttings storage.

c. The cuttings trench would not be lined. Three sides of the trench would be fenced before drilling starts and the fourth side would be fenced at the time drilling is completed on the last well on the pad and shall remain until cuttings trench has been reclaimed.

d. Upon completion of drilling, the cuttings would be tested and further processed as necessary to meet standards for burial on site or other BLM approved uses such as a media for road surfacing or growing media for reclamation.

e. Due to topography and pad size constraints, cuttings from this pad would be stored on the SE 9 pad in a lined and bermed area during drilling and completion operations. Cuttings would then be transferred back to the NE 9 pad for burial on site or other BLM approved uses. Cuttings would be separated from the liquids and dried to the fullest extend feasible then transported to this pad via dump truck or front-end loader for temporary storage. Following completion of drilling operations on the NE 9 pad the cuttings would be transported back to the NE 9 pad for burial on site or other uses as approved by the BLM AO. The temporary cuttings containment located on this pad would be bermed and lined with a liner of minimum 20 mil thickness.

Conventional or Semi-Closed Loop Drilling System

f. In the event closed loop drilling is not employed, a conventional or semi-closed loop system would be used where a small amount of fluid is retained in the cuttings and the cuttings are placed in the reserve pit. The reserve pit would also store water to make up losses and store any excess drilling fluids. Reserve pits would be constructed with an impermeable liner so as to prevent releases. The pit liner would overlap the pit walls and be anchored with soil and/or rocks to hold it in place. No trash, scrap pipe, etc. that could puncture the liner would be disposed of in the pit and a minimum of 2 ft of freeboard would be maintained in the pit at all times. Reserve pits would be constructed and maintained according to BLM or UDOGM requirements as appropriate.

g. Three sides of the reserve pit would be fenced before drilling starts and the fourth side would be fenced at the time drilling is completed on the last well on the pad and shall remain until the pit is dry.

RECEIVED: May 04, 2012

h. Any hydrocarbons floating on the surface of the reserve pit would be removed as soon as possible after drilling and completion operations are finished. In some cases, the reserve pit may be flagged overhead or covered with wire or plastic mesh to protect migrating birds.

Completion Pit

i. Where closed loop drilling is employed, the cuttings trench disturbed area would typically also be used to store water for completion activities. The completion pit would be constructed with an impermeable liner to prevent releases and would be fenced and constructed and maintained according to BLM or UDOGM requirements.

Other

j. Produced fluids from the wells other than water would be decanted into steel test tanks until such time as construction of production facilities is completed. Produced water may be used in further drilling and completion activities, evaporated in the pit or would be hauled to a state approved disposal facility.

k. After initial clean-up and based on volumes, BBC would install a tank (maximum size 400 barrel capacity) to contain produced waste water. After first production, produced wastewater would be confined to tanks within the CTB for a period not to exceed ninety (90) days. Thereafter, produced water would be used in further drilling and completion activities or hauled to a State approved disposal facility.

l. Any salts and/or chemicals, which are an integral part of the drilling system, would be disposed of in the same manner as the drilling fluid.

m. Any spills of oil, condensate, produced or frac water, drilling fluids, or other potentially deleterious substances would be recovered and either returned to its origin or disposed of at an approved disposal site, most likely in Duchesne, Utah.

n. Chemicals on the EPA's Consolidated List of Chemicals subject to reporting under Title III of the Superfund Amendments and Reauthorization Act of 1986 (SARA) may be used or stored in quantities over reportable quantities. In the course of drilling, BBC could potentially store and use diesel fuel, sand (silica), hydrochloric acid, and CO_2 gas, all described as hazardous substances in 40 CFR Part 302, Section 302.4, in quantities exceeding 10,000 pounds. In addition, natural gas condensate and crude oil and methanol may be stored or used in reportable quantities. Small quantities of retail products (paint/spray paints, solvents {e.g., WD-40}, and lubrication oil) containing non-reportable volumes of hazardous substances may be stored and used on site at any time. No extremely hazardous substances, as defined in 40 CFR 355, would be used, produced, stored, transported or disposed of in association with the drilling, testing or completion of the wells.

o. Portable toilets and trash containers would be located onsite during drilling and completion operations. A commercial supplier would install and maintain portable toilets and equipment and would be responsible for removing sanitary waste. Sanitary waste facilities (i.e. toilet holding tanks) would be regularly pumped and their contents disposed of at approved sewage disposal facilities in Carbon, Duchesne, and/or Uintah Counties, in accordance with applicable rules and regulations regarding sewage treatment and disposal. Accumulated trash and nonflammable waste materials would be hauled to an approved landfill once a week or as often as necessary. All debris and waste materials not contained in the trash containers would be cleaned up, removed from the construction ROW, well pad, or worker housing location, and disposed of at an approved landfill. Trash would be cleaned up everyday.

p. Sanitary waste equipment and trash bins would be removed from the WTP Project Area upon completion of access road or pipeline construction; following drilling and completion operations at an individual well pad; when worker housing is no longer needed; or as required.

RECEIVED: May 04, 2012

q. A flare pit may be constructed a minimum of 110' from the wellhead(s) and may be used during completion work. In the event a flare pit proves to be unworkable, a temporary flare stack or open top tank would be installed. BBC would flow back as much fluid and gas as possible into pressurized vessels, separating the fluids from the gas. In some instances, due to the completion fluids utilized within the West Tavaputs Project area, it is not feasible to direct the flow stream from the wellbore through pressurized vessels. In such instances BBC proposes to direct the flow to the open top tanks until flow through the pressurized vessels is possible. At which point the fluid would either be returned to the reserve pit or placed into a tank(s). The gas would be directed to the flare pit, flare stack (each with a constant source of ignition), or may be directed into the sales pipeline.

r. Flare lines would be directed so as to avoid damage to surrounding vegetation, adjacent rock faces, or other resources, and as required by regulations. Flare lines would be in place on all well locations. In the event it becomes necessary to flare a well, a deflector and/or directional orifice would also be used to safeguard both personnel and adjacent natural rock faces.

8. Ancillary Facilities:

a. Garbage containers and portable toilets would be located on the well pad.

b. Storage yards for tubulars and other equipment and temporary housing areas, located on BBC surface, would be utilized.

c. On well pads where active drilling and completion is occurring, temporary housing would be provided on location for the well pad supervisor, geologist, tool pusher, and others that are required to be on location at all times. Active drilling locations could include up to five single wide mobile homes or fifth wheel campers/trailers.

9. Well Site Layout:

a. Each well would be properly identified in accordance with 43 CFR 3162.6

b. The pad with a co-located CTB, has been staked at its maximum size of 386 x 290 ft. The cuttings trench/reserve pit/completion pit will be on the SE 9 pad. The location layout and cross section diagrams are enclosed. For disturbance totals, see 12.d below.

c. Within the approved well pad location, a crawler tractor would strip whatever topsoil is present and stockpile it along the edge of the well pad for use during reclamation. Vegetation would be distributed along the sides of the well pad.

d. Proposed wellheads and christmas trees may be contained below location grade in pre-cast concrete trenches.

e. The cuttings trench or reserve pit would be fenced on three sides during drilling and on the fourth side immediately after the removal of the drilling rig. In the event closed loop drilling is employed, the cuttings trench would be removed or stockpiled on one edge of the trench and the area would be used for a completion pit during completion operations.

f. Fill from pit excavation would be stockpiled along the edge of the pit and the adjacent edge of the well pad.

g. Use of erosion control measures, including proper grading to minimize slopes, diversion terraces and ditches, mulching, terracing, riprap, fiber matting, temporary sediment traps, and broad-based drainage dips or low water crossings would be employed by BBC as necessary and appropriate to minimize erosion and surface runoff during well pad construction and operation. Cut and fill slopes would be constructed such that stability would be maintained for the life of the activity.

RECEIVED: May 04, 2012

i. Construction of the well pad would take from 1 to 3 weeks depending on the features at the particular site.

j. Dust suppression may be implemented if necessary to minimize the amount of fugitive dust.

10. Plan for Restoration of the Surface:

Interim Reclamation

a. Portions of the disturbed area within a construction ROW or portions of well pads not needed for production would be reclaimed according to specifications of the BLM as appropriate.

b. Prior to interim reclamation activities, all solid wastes and refuse would be removed and placed at approved landfills. The portions of the well pad or access and pipeline corridor not needed for production would be re-contoured to promote proper drainage, salvaged topsoil would be replaced, and side slopes would be ripped and disked on the contour. Following site preparation, reseeding would be completed during either the spring or fall planting season, when weather conditions are most favorable. Seed mixtures for reclaimed areas would be site-specific and would require approval by the BLM. BBC would apply and meet BLM's Green River District Reclamation Standards, where practicable.

c. The operator would control noxious weeds along access road use authorizations, pipeline route authorizations, well sites or other applicable facilities by spraying or mechanical removal. A list of noxious weeds may be obtained from the BLM or the appropriate county extension office. On BLM administered land it is required that a Pesticide Use Proposal be submitted and approved prior to the application of herbicides, pesticides or possibly hazardous chemicals.

d. Following interim reclamation, access roads (including roads co-located with pipeline) would be reduced to approximately 30 feet of disturbance. Roads leading to well sites that would not have surface production equipment would be designed and reclaimed in a way that minimizes impacts to the visual character of the host lands.

e. Weather permitting, earthwork for interim reclamation would be completed within 6 months of completion of the final well on the pad or plugging and would continue until satisfactory revegetation cover is established. Inter-seeding (i.e. seeding into existing vegetation), secondary seeding, or staggered seeding may be used to accomplish revegetation objectives. During rehabilitation of areas in important wildlife habitat, provisions would be made for the establishment of native browse and forb species. Follow-up seeding or corrective erosion control measures would occur on areas where initial reclamation efforts are unsuccessful, as determined by the BLM or the appropriate surface management agency.

Dry Hole/Final Reclamation

f. All disturbed lands associated with this project, including the pipelines, access roads, water management facilities, etc. would be expediently reclaimed and reseeded in accordance with the reclamation plan and any pertinent site-specific COAs.

g. When a well is to be plugged and abandoned, BBC would submit a Notice of Intent to Abandon (NOA) to the BLM or UDOGM as appropriate. The BLM or UDOGM would then attach the appropriate surface rehabilitation COAs for the well pad, and as appropriate, for the associated access road, pipeline, and ancillary facilities. During plugging and abandonment, all structures and equipment would be removed from the well pad. Backfilling, leveling, and re-contouring would then be performed according to the BLM or UDOGM order.

h. Any mulch used by BBC would be weed-free and free from mold, fungi, or noxious weeds. Mulch may include native hay, small grain straw, wood fiber, live mulch, cotton, jute, synthetic netting or rock.

RECEIVED: May 04, 2012

i. BBC would reshape disturbed channel beds to their approximate original configuration.

j. Reclamation of abandoned roads may include re-shaping, re-contouring, re-surfacing with topsoil, installation of water bars, and seeding on the contours. Road beds, well pads, and other compacted areas would be ripped to a depth of approximately 1 foot on 1.5 foot centers to reduce compaction prior to spreading the topsoil across the disturbed area. Stripped vegetation would be spread over the disturbance area for nutrient recycling, where practical. Additional erosion control measures (e.g. fiber matting) and road barriers to discourage travel may be constructed if appropriate. Graveled roads, well pads, and other sites would be stripped of usable gravel prior to ripping as deemed necessary. Culverts, cattleguards, and signs would be removed as roads are abandoned.

k. BBC will follow their field wide reclamation plan and the site specific plans will be submitted within 90 days of APD approval in a sundry to the appropriate field office.

11. Surface and Mineral Ownership:

a. Surface ownership – Federal under the management of the Bureau of Land Management – Price Field Office, 125 South 600 West, Price Utah 84078; (435) 636-3600.

b. Mineral ownership –

Federal under the management of the Bureau of Land Management – Price Field Office, 125 South 600 West, Price Utah 84078; (435) 636-3600.

State under the management of the state of Utah – 1594 West North Temple, Suite 1210, Salt Lake City, Utah 84116; (801) 538-5340.

12. Other Information:

a. Montgomery Archaeological Consultants conducted a cultural resource inventory for this pad/CTB, access and pipeline under MOAC 11-136, dated 6/2/2011.

b. BBC would require that their personnel, contractors, and subcontractors to comply with Federal regulations intended to protect archeological and cultural resources.

c. Project personnel and contractors would be educated on and subject to the following requirements:

- No dogs within the WTP Project Area;
- No firearms within the WTP Project Area;
- No littering within the WTP Project Area;
- No alcohol within the WTP Project Area;
- Smoking within the WTP Project Area would only be allowed in off-operator active locations or in specifically designated smoking areas. All cigarette butts would be placed in appropriate containers and not thrown on the ground or out windows of vehicles; personnel and contractors would abide by all fire restriction orders;
- Campfires or uncontained fires of any kind would be prohibited within the WTP Project Area;
- Portable generators used in the WTP Project Area would have spark arrestors.

d. All disturbances are within the Prickly Pear unit: Surface and bottom hole disturbances occur on lease UTU-73006 and UTU-01519B.

	Short Term	Long Term
Proposed Estimated Pad Disturbance	6.731	.989
Proposed Estimated Co-Located Road/PL Disturbance	3.506	1.315
Total Proposed Estimated	10.237 Acres	2.304 acres

RECEIVED: May 04, 2012

API Well Number: 43007503360000

OPERATOR CERTIFICATION

Certification:

I hereby certify that I, or someone under my direction supervision, have inspected the drill site and access route proposed herein; that I am familiar with the conditions which currently exist; that I have full knowledge of state and Federal laws applicable to this operation; that the statements made in this APD package are, to the best of my knowledge, true and correct; and that the work associated with the operations proposed herein would be performed in conformity with this APD package and the terms and conditions under which it is approved. I also certify that I, or the company I represent, am responsible for the operations conducted under this application. These statements are subject to the provisions of 18 U.S.C. 1001 for the filings of false statements.

Executed this 17th day of April 2012

Name: Brady Riley

Position Title: Permit Analyst

Address: 1099 18th Street, Suite 2300, Denver, CO 80202

Telephone: 303-312-8115

Field Representative Danny Rasmussen

Address: 1820 W. Hwy 40, Roosevelt, UT 84066

Telephone: 435-724-6999

E-mail: drasmussen@billbarrettcorp.com

Brady Riley

Brady Riley, Permit Analyst

BILL BARRETT CORPORATION

TYPICAL 3,000 p.s.i. BLOWOUT PREVENTER

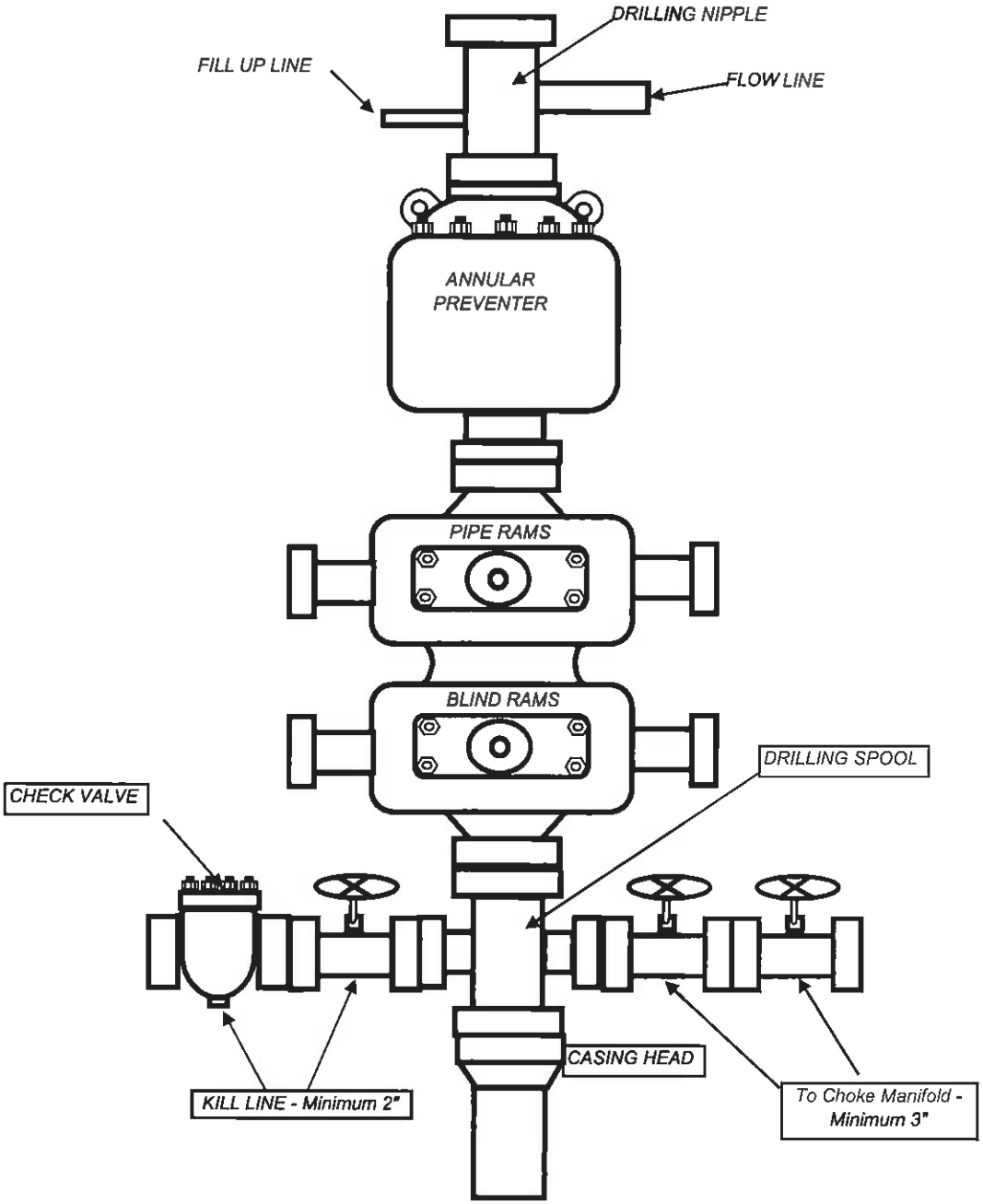

BILL BARRETT CORPORATION

TYPICAL 3,000 p.s.i. CHOKE MANIFOLD

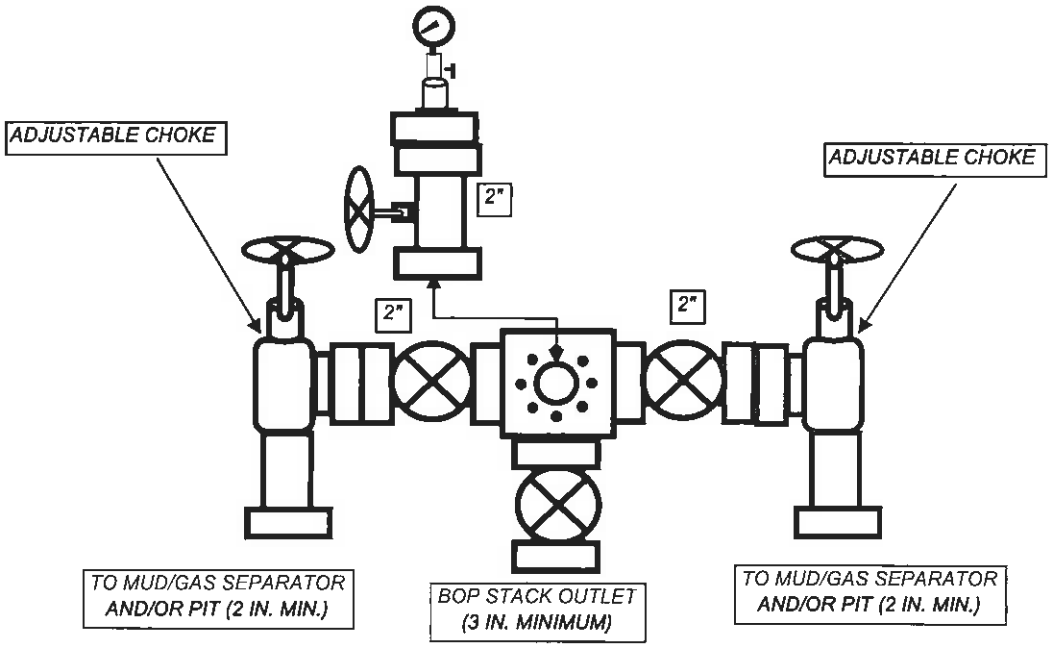

API Well Number: 43007503360000

Bill Barrett Corporation

April 17, 2012

Ms. Diana Mason
State of Utah
Division of Oil, Gas and Mining
1594 West North Temple, Suite 1210
P.O. Box 145801
Salt Lake City, Utah 84114-5801

RE: Directional Drilling R649-3-11
Prickly Pear Unit Federal #5-10D-12-15
SHL: 1622' FNL & 148' FEL, SENE 9-T12S-R15E
BHL: 1979' FNL & 667' FWL, SWNW 10-T12S-R15E
Carbon County, Utah

Dear Ms. Mason:

Pursuant to the filing of Bill Barrett Corporation's ("BBC") Application for Permit to Drill ("APD") regarding the above referenced well, we are hereby submitting this letter in accordance with Oil & Gas Conservation Rule R649-3-11 pertaining to the "Exception to Location and Siting of Wells."

- The above-mentioned proposed location is within the Prickly Pear Unit Area;
- BBC is permitting this well as a directional well in order to minimize surface disturbance. By locating the well at the surface location and directionally drilling from this location, BBC will be able to utilize the existing road and pipelines in the area;
- BBC hereby certifies this well is located within 460 feet of the unit boundary.

Based on the information provided, BBC requests that the permit be granted pursuant to R649-3-11. If you should have any questions or need further information, please contact Vicki Wambolt, Landman at 303-312-8513.

Sincerely,

Vicki Wambolt
BLR

Vicki Wambolt
Landman

1099 18TH STREET SUITE 2300 DENVER, CO 80202 USA
T 303.293.9100 F 303.291.0420 www.BILLBARRETTCORP.com

API Well Number: 43007503360000

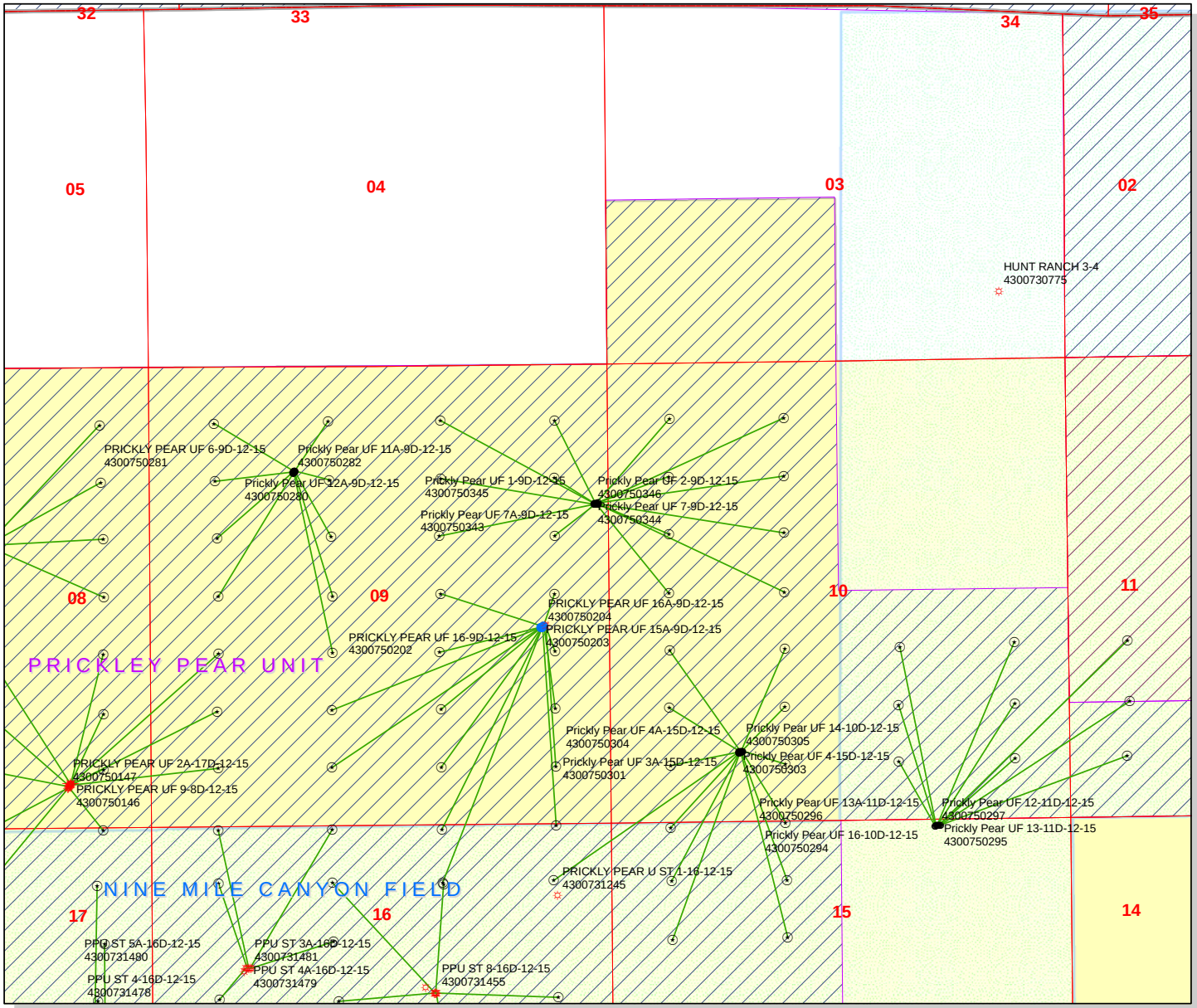

API Number: 4300750336

Well Name: Prickly Pear UF 5-10D-12-15

Township T1.2 . Range R1.5 . Section 09

Meridian: SLBM

Operator: BILL BARRETT CORP

Map Prepared:
Map Produced by Diana Mason

Units
STATUS
- ACTIVE
- EXPLORATORY
- GAS STORAGE
- NF PP OIL
- NF SECONDARY
- PI OIL
- PP GAS
- PP GEOTHERML
- PP OIL
- SECONDARY
- TERMINATED

Fields
STATUS
- Unknown
- ABANDONED
- ACTIVE
- COMBINED
- INACTIVE
- STORAGE
- TERMINATED

Wells Query
Status
- APD - Aproved Permit
- DRL - Spuded (Drilling Commenced)
- GIW - Gas Injection
- GS - Gas Storage
- LA - Location Abandoned
- LOC - New Location
- OPS - Operation Suspended
- PA - Plugged Abandoned
- PGW - Producing Gas Well
- POW - Producing Oil Well
- RET - Returned APD
- SGW - Shut-in Gas Well
- SOW - Shut-in Oil Well
- TA - Temp. Abandoned
- TW - Test Well
- WDW - Water Disposal
- WIW - Water Injection Well
- WSW - Water Supply Well

1,500 750 0 1,500 Feet

1:14,184

RECEIVED: May 09, 2012

United States Department of the Interior

BUREAU OF LAND MANAGEMENT
Utah State Office
P.O. Box 45155
Salt Lake City, Utah 84145-0155

IN REPLY REFER TO:
3160
(UT-922)

May 16, 2012

Memorandum

To: Associate Field Office Manager,
Price Field Office

From: Michael Coulthard, Petroleum Engineer

Subject: 2012 Plan of Development Prickly Pear Unit
Carbon County, Utah.

Pursuant to email between Diana Whitney, Division of Oil, Gas and Mining, and Mickey Coulthard, Utah State Office, Bureau of Land Management, the following wells are planned for calendar year 2012 within the Prickly Pear Unit, Carbon County, Utah.

API # WELL NAME LOCATION
(Proposed PZ WASATCH-MESA VERDE)

Prickly Pear NE 15 Pad
(Currently unleased Federal Minerals on November 2012 Sale)
43-007-50294 P Pear 16-10D-12-15 Sec 15 T12S R15E 0071 FNL 1525 FEL
BHL Sec 10 T12S R15E 0691 FSL 0647 FEL

Prickly Pear SE 17 Pad
43-007-50307 P Pear 8A-17D-12-15 Sec 17 T12S R15E 2021 FSL 0578 FEL
BHL Sec 17 T12S R15E 1324 FNL 0581 FEL

Prickly Pear NE 9 Pad
43-007-50335 P Pear 6A-10D-12-15 Sec 09 T12S R15E 1611 FNL 0142 FEL
BHL Sec 10 T12S R15E 1326 FNL 1985 FWL

43-007-50336 P Pear 5-10D-12-15 Sec 09 T12S R15E 1622 FNL 0148 FEL
BHL Sec 10 T12S R15E 1979 FNL 0667 FWL

43-007-50338 P Pear 12A-10D-12-15 Sec 09 T12S R15E 1625 FNL 0164 FEL
BHL Sec 10 T12S R15E 2631 FSL 0661 FWL

43-007-50339 P Pear 3-10D-12-15 Sec 09 T12S R15E 1614 FNL 0158 FEL
BHL Sec 10 T12S R15E 0659 FNL 1990 FWL

This office has no objection to permitting the wells at this time.

Michael L. Coulthard

Digitally signed by Michael L. Coulthard
DN: cn=Michael L. Coulthard, o=Bureau of Land Management, ou=Branch of Minerals, email=Michael_Coulthard@blm.gov, c=US
Date: 2012.05.16 07:54:23 -06'00'

RECEIVED: May 16, 2012

bcc: File - Prickly Pear Unit
Division of Oil Gas and Mining
Central Files
Agr. Sec. Chron
Fluid Chron

MCoulthard:mc:5-16-12

RECEIVED: May 16, 2012

WORKSHEET
APPLICATION FOR PERMIT TO DRILL

APD RECEIVED: 5/4/2012
API NO. ASSIGNED: 43007503360000
WELL NAME: Prickly Pear UF 5-10D-12-15
OPERATOR: BILL BARRETT CORP (N2165)
PHONE NUMBER: 303 312-8115
CONTACT: Brady Riley

PROPOSED LOCATION: SENE 09 120S 150E
Permit Tech Review: ✔

SURFACE: 1622 FNL 0148 FEL
Engineering Review: ☐

BOTTOM: 1979 FNL 0667 FWL
Geology Review: ✔

COUNTY: CARBON
LATITUDE: 39.79108
LONGITUDE: -110.23289
UTM SURF EASTINGS: 565679.00
NORTHINGS: 4404851.00
FIELD NAME: UNDESIGNATED
LEASE TYPE: 1 - Federal
LEASE NUMBER: UTU73006
PROPOSED PRODUCING FORMATION(S): WASATCH-MESA VERDE
SURFACE OWNER: 1 - Federal
COALBED METHANE: NO

RECEIVED AND/OR REVIEWED:

- ✔ **PLAT**
- ✔ **Bond:** FEDERAL - WYB000040
- ☐ **Potash**
- ☐ **Oil Shale 190-5**
- ☐ **Oil Shale 190-3**
- ☐ **Oil Shale 190-13**
- ✔ **Water Permit:** NINE MILE CANYON
- ☐ **RDCC Review:**
- ☐ **Fee Surface Agreement**
- ☐ **Intent to Commingle**

Commingling Approved

LOCATION AND SITING:

- ☐ **R649-2-3.**

Unit: PRICKLY PEAR

- ☐ **R649-3-2. General**
- ☐ **R649-3-3. Exception**
- ✔ **Drilling Unit**

Board Cause No: Cause 256-01
Effective Date: 12/16/2004
Siting: Suspends General Siting

- ✔ **R649-3-11. Directional Drill**

Comments: Presite Completed

Stipulations: 4 - Federal Approval - dmason
15 - Directional - dmason

RECEIVED: May 16, 2012

GARY R. HERBERT
Governor
GREGORY S. BELL
Lieutenant Governor

State of Utah
DEPARTMENT OF NATURAL RESOURCES
MICHAEL R. STYLER
Executive Director
Division of Oil, Gas and Mining
JOHN R. BAZA
Division Director

Permit To Drill

****

Well Name: Prickly Pear UF 5-10D-12-15
API Well Number: 43007503360000
Lease Number: UTU73006
Surface Owner: FEDERAL
Approval Date: 5/16/2012

Issued to:
BILL BARRETT CORP, 1099 18th Street Ste 2300, Denver, CO 80202

Authority:
Pursuant to Utah Code Ann. 40-6-1 et seq., and Utah Administrative Code R649-3-1 et seq., the Utah Division of Oil, Gas and Mining issues conditions of approval, and permit to drill the listed well. This permit is issued in accordance with the requirements of Cause 256-01. The expected producing formation or pool is the WASATCH-MESA VERDE Formation(s), completion into any other zones will require filing a Sundry Notice (Form 9). Completion and commingling of more than one pool will require approval in accordance with R649-3-22.

Duration:
This approval shall expire one year from the above date unless substantial and continuous operation is underway, or a request for extension is made prior to the expiration date

General:
Compliance with the requirements of Utah Admin. R. 649-1 et seq., the Oil and Gas Conservation General Rules, and the applicable terms and provisions of the approved Application for permit to drill.

Conditions of Approval:
State approval of this well does not supercede the required federal approval, which must be obtained prior to drilling.

In accordance with Utah Admin. R.649-3-11, Directional Drilling, the operator shall submit a complete angular deviation and directional survey report to the Division within 30 days following completion of the well.

Notification Requirements:
The operator is required to notify the Division of Oil, Gas and Mining of the following actions during drilling of this well:

- Within 24 hours following the spudding of the well - contact Carol Daniels at 801-538-5284
  (please leave a voicemail message if not available)
  OR
  submit an electronic sundry notice (pre-registration required) via the Utah Oil &

Gas website
at http://oilgas.ogm.utah.gov

Reporting Requirements:
All reports, forms and submittals as required by the Utah Oil and Gas Conservation General Rules will be promptly filed with the Division of Oil, Gas and Mining, including but not limited to:

- Entity Action Form (Form 6) - due within 5 days of spudding the well
- Monthly Status Report (Form 9) - due by 5th day of the following calendar month
- Requests to Change Plans (Form 9) - due prior to implementation
- Written Notice of Emergency Changes (Form 9) - due within 5 days
- Notice of Operations Suspension or Resumption (Form 9) - due prior to implementation
- Report of Water Encountered (Form 7) - due within 30 days after completion
- Well Completion Report (Form 8) - due within 30 days after completion or plugging

Approved By:

For John Rogers
Associate Director, Oil & Gas

Form 3160-3
(August 2007)

COPY

UNITED STATES
DEPARTMENT OF THE INTERIOR
BUREAU OF LAND MANAGEMENT

FORM APPROVED
OMB No. 1004-0136
Expires July 31, 2010

APPLICATION FOR PERMIT TO DRILL OR REENTER

5. Lease Serial No.
UTU73006

6. If Indian, Allottee or Tribe Name

1a. Type of Work: ☒ DRILL ☐ REENTER

7. If Unit or CA Agreement, Name and No.
UTU79487X

8. Lease Name and Well No.
PRICKLY PEAR UNIT FEDERAL 5-10D 12-15

1b. Type of Well: ☐ Oil Well ☒ Gas Well ☐ Other ☐ Single Zone ☒ Multiple Zone

2. Name of Operator
BILL BARRETT CORPORATION
Contact: BRADY RILEY
E-Mail: briley@billbarrettcorp.com

9. API Well No.
43 007 50336

3a. Address
1099 18TH STREET SUITE 2300
DENVER, CO 80202

3b. Phone No. (include area code)
Ph: 303.312.8115
Fx: 303.291.0420

10. Field and Pool, or Exploratory
PRICKLY PEAR

4. Location of Well *(Report location clearly and in accordance with any State requirements.*)*

At surface SENE 1622FNL 148FEL

At proposed prod. zone SWNW 1979FNL 667FWL

11. Sec., T., R., M., or Blk. and Survey or Area
Sec 9 T12S R15E Mer SLB
SME: BLM

14. Distance in miles and direction from nearest town or post office*
47.1 MILES TO MYTON, UT

12. County or Parish
CARBON

13. State
UT

15. Distance from proposed location to nearest property or lease line, ft. (Also to nearest drig. unit line, if any)
667' LEASE; 2088' UNIT

16. No. of Acres in Lease
2054.68

17. Spacing Unit dedicated to this well
40.00

18. Distance from proposed location to nearest well, drilling, completed, applied for, on this lease, ft.
656' LEASE & 4748 COMPLETED

19. Proposed Depth
7596 MD
7445 TVD

20. BLM/BIA Bond No. on file
WYB000040

21. Elevations (Show whether DF, KB, RT, GL, etc.
6758 GL

22. Approximate date work will start
08/01/2012

23. Estimated duration
25

RECEIVED
OCT 11 2012
DIV. OF OIL, GAS & MINING

24. Attachments

The following, completed in accordance with the requirements of Onshore Oil and Gas Order No. 1, shall be attached to this form:

1. Well plat certified by a registered surveyor.
2. A Drilling Plan.
3. A Surface Use Plan (if the location is on National Forest System Lands, the SUPO shall be filed with the appropriate Forest Service Office).
4. Bond to cover the operations unless covered by an existing bond on file (see Item 20 above).
5. Operator certification
6. Such other site specific information and/or plans as may be required by the authorized officer.

25. Signature
(Electronic Submission)

Name (Printed/Typed)
BRADY RILEY Ph: 303.312.8115

Date
04/19/2012

Title
PERMIT ANALYST

Approved by (Signature)

Name (Printed/Typed)
/s/ Leslie Peterson

Date
9/24/12

Title
AFM LANDS & MINERALS

Office
PRICE FIELD OFFICE

Application approval does not warrant or certify the applicant holds legal or equitable title to those rights in the subject lease which would entitle the applicant to conduct operations thereon.
Conditions of approval, if any, are attached.

Title 18 U.S.C. Section 1001 and Title 43 U.S.C. Section 1212, make it a crime for any person knowingly and willfully to make to any department or agency of the United States any false, fictitious or fraudulent statements or representations as to any matter within its jurisdiction.

Additional Operator Remarks (see next page)

Electronic Submission #135898 verified by the BLM Well Information System
For BILL BARRETT CORPORATION, sent to the Price
Committed to AFMSS for processing by ANITA JONES on 05/03/2012 (12AIJ1173AE)

NOTICE OF APPROVAL

CONDITIONS OF APPROVAL ATTACHED

**** BLM REVISED ** BLM REVISED ** BLM REVISED ** BLM REVISED ** BLM REVISED ****

UNITED STATES DEPARTMENT OF THE INTERIOR
BUREAU OF LAND MANAGEMENT
PRICE FIELD OFFICE
125 SOUTH 600 WEST PRICE, UT 84501 (435) 636-3600

CONDITIONS OF APPROVAL FOR APPLICATION FOR PERMIT TO DRILL

Company:	**Bill Barrett Corporation**	**Surface Location:**	**SENE-Sec 9-T12S-R15E**
Well No:	**Prickly Pear Unit Federal 5-10D-12-15**	**Lease No:**	**UTU-73006**
API No:	**43-007-50336**	**Agreement:**	**UTU-79487X**

Title	**Name**	**Office Phone Number**	**Cell Phone Number**
Associate Field Manager & Authorized Officer:	Leslie Peterson (Acting)	(435)-636-3661	(435) 650-9136
Petroleum Engineer:	Leslie Peterson	(435) 636-3661	(435) 650-9136
Petroleum Engineering Technician	Angela Wadman	(435) 636-3662	(435) 632-8595
NRS/Envir Scientist:	Don Stephens	(435) 636-3608	

Fax: (435) 636-3657

A COPY OF THESE CONDITIONS SHALL BE FURNISHED TO YOUR FIELD REPRESENTATIVE TO INSURE COMPLIANCE

All lease and/or unit operations are to be conducted in such a manner that full compliance is made with the applicable laws, regulations (43 CFR Part 3160), and this approved Application for Permit to Drill including Surface and Downhole Conditions of Approval. The operator is considered fully responsible for the actions of his subcontractors. A copy of the approved APD must be on location during construction, drilling, and completion operations. **This permit is approved for a two (2) year period, or until lease expiration, whichever occurs first. An additional extension, up to two (2) years, may be applied for by sundry notice prior to expiration.**

NOTIFICATION REQUIREMENTS

Location Construction (Notify NRS)	- Forty-Eight (48) hours prior to construction of location and access roads.
Location Completion (Notify NRS)	- Prior to moving on the drilling rig.
Spud Notice (Notify Petroleum Engineer)	- Twenty-Four (24) hours prior to spudding the well.
Casing String & Cementing (Notify Petroleum Eng. Technician)	- Twenty-Four (24) hours prior to running casing and cementing all casing strings.
BOP & Related Equipment Tests (Notify Petroleum Eng. Technician)	- Twenty-Four (24) hours prior to initiating pressure tests.
First Production Notice (Notify Petroleum Engineer)	- Within Five (5) business days after new well begins, or production resumes after well has been off production for more than ninety (90) days.

UDOGM

DRILLING PROGRAM
CONDITIONS OF APPROVAL (COAs)

SITE SPECIFIC DRILLING & PRODUCTION COAs

- While drilling the surface hole with air, a float valve shall be run above the bit, per Onshore Order #2 Part III.E Special Drilling Operations.

- Bill Barrett Corporation (BBC) proposes the use of several different options of production casing (including the N-80, I-100 and P-110 grades). BBC has stated that only the P-110 grade of pipe will be used in the casing and completion of the production hole. Therefore, the use of N-80 and I-100 grade production casing is not approved for use in this well. However, any of these grades may be requested for use in the future by sundry notice.

- When cementing surface casing, if cement returns are not seen at surface, mitigation measures shall be taken to ensure the groundwater and all usable waters are properly protected per Onshore Order #2 Part III.B.1(c) Casing and Cementing Requirements. Cementing jobs where cement reaches surface, then falls back downhole, shall be topped off as necessary until such time the cement remains in-place at surface, prior to starting drilling operations on the next casing string.

- When cementing the production casing, the cement job shall contain sufficient volume to attempt full coverage of exposed hole behind pipe to protect all usable waters, lost circulation zones and other minerals which may be encountered while drilling to total depth, and also provide a minimum 200' foot overlap above the surface casing shoe. A cement bond log (CBL) shall be run to determine the top of cement behind the production casing, and a field copy sent to the Price Field Office.

VARIANCES GRANTED

- BBC's request for a variance not to use de-duster equipment (Onshore Order #2 Part III.E Special Drilling Operations) is granted, unless the air/mist system is not used.

- BBC's request for a variance to use an electronic flow meter for gas measurement (Onshore Order #5 Measurement of Gas) is granted as long as it meets or exceeds the requirements of Utah NTL 2007-1 regarding the use of Electronic Flow Computers.

- BBC's request for variance from Onshore Order #5 Part III.C.3 Gas Measurement by Orifice Meter to use a flow conditioner on this well instead of straightening vanes is approved with the following conditions:

  1. Flow conditioners must be installed in accordance with the manufacturer's specifications.
  2. The make, model, and location of flow conditioner must be clearly identified and available to BLM on-site at all times.
  3. Thermowells must be placed downstream of the orifice in accordance with API 14.3 (1985).
  4. This is a provisional approval that is subject to change pending final review and analysis by BLM. If BLM determines that this flow conditioner cannot meet or exceed the minimum standards required by Onshore Order #5, you will be required to retrofit the installation to comply with BLM requirements, or replace the installation with one that complies with AGA Report Number 3, 1985. The time frame for compliance will be specified by the Price Field Office.

STANDARD OPERATING REQUIREMENTS

- The requirements included in Onshore Order #2 Drilling Operations shall be followed.
- A copy of the approved Application for Permit to Drill (APD) for this well shall be on location at all times once drilling operations have commenced.
- The Price Field Office petroleum engineer will be notified 24 hours prior to spudding the well.
- Notify the Price Field Office petroleum engineering technician at least 24 hours in advance of casing cementing operations, BOPE tests and casing pressure or mud weight equivalency tests.
- The requirements of Onshore Order #6 Hydrogen Sulfide Operations shall be followed when operations are being conducted in zones which are known or could reasonably be expected to contain H2S or which, when flared, could produce SO2, in such concentrations that upon release could constitute a hazard to human life. These requirements do not apply when operating in zones where H2S is presently known not to be present or cannot reasonably be expected to be present in concentrations of 100 ppm or more in the gas stream.
- Any deviation from the permitted APD's proposed drilling program shall have prior approval from the petroleum engineer. Changes may be requested verbally (to be followed by a written sundry sent to this office), or submitted by written sundry if time warrants.
- Blowout prevention equipment (BOPE) shall remain in use until the well is completed. The closing unit controls shall remain unobstructed and readily accessible at all times, and choke manifolds shall be located outside of the rig substructure.
- All BOPE components shall be inspected daily, and the inspections recorded in the daily drilling report. Components shall be operated and tested, as required by Onshore Order #2 to insure good mechanical working order. All BOPE pressure tests shall be performed by a test pump with a chart recorder, and <u>not</u> by the rig pumps. Test results shall be reported in the driller's log.
- All casing strings below the conductor pipe shall be pressure tested to .22 psi/foot or 1500 psi (whichever is greater), but not to exceed 70% of the internal yield pressure.
- No aggressive/fresh hard-banded drill pipe shall be used in the casing design. The proposed use of non-API standard casing must be approved in advance by the petroleum engineer.
- During drilling operations, daily drilling reports shall be submitted by sundry on a weekly basis to the Price Field Office. Within 30 days of finishing drilling and completion operations, a chronological daily operations history shall be submitted by sundry to this office. A copy of all logs run on this well shall be submitted digitally (in PDF or TIFF format) to the Price Field Office.
- A complete set of angular deviation and directional surveys for this directional well will be submitted to the Price Field Office petroleum engineer within 30 days of completing the well.
- The venting or flaring of gas while initially testing the well shall be done in accordance with the requirements specified in Notice to Lessees #4A, and shall not exceed a period of 30 days or the production of 50 MMCF of gas, whichever occurs first. Additional time needed to vent or flare gas during production operations requires prior approval from the Price Field Office.

STANDARD OPERATING REQUIREMENTS (cont.)

- Should this well be successfully completed as a producing well, the Price Field Office must be notified within 5 business days following the date the well has first sales.

- Proposed production operations that involve: 1) the commingling of production from wells located on-lease or off-lease, 2) off-lease measurement, or 3) off-lease storage shall have prior written approval from the Price Field Office.

- Operators shall meet the requirements listed in Onshore Order #4 Measurement of Oil and Onshore Order #5 Measurement of Gas. New oil and gas meters shall be calibrated prior to initial product sales. The operator (or its contractors) is responsible for providing the date and time of the initial meter calibration (and all future meter proving schedules) to the petroleum engineering technician. Copies of all meter calibration reports that are performed shall be submitted to the Price Field Office upon request.

- In accordance with 43 CFR 3162.4-3, this well's production data shall be reported on the "Monthly Report of Operations" starting with the month in which drilling operations commence and continue each month until the well is plugged and abandoned.

- The operator is responsible for submitting the information required in 43 CFR 3162.4-1 Well Records and Reports, including BLM Form 3160-4, Well Completion and Recompletion Report and Log which must be submitted to the Price Field Office within 30 days of completing the well.

- Onshore Order #7 authorizes the disposal of water produced from this well in the reserve pit for a period of 90 days after the date of initial production. A permanent disposal method must be submitted and approved by this office, and in operation prior to the end of this 90-day period.

- The requirements of Onshore Order #3 Site Security shall be implemented, and include (as applicable): 1) all lines entering and leaving hydrocarbon storage tanks shall be effectively sealed and seal records maintained, 2) no by-passes are allowed to be constructed around gas meters, 3) a site facility diagram shall be submitted to the Price Field Office within 60 days following construction of the facilities.

- Additional construction that is proposed, or the proposed alteration of existing facilities (including roads, gathering lines, batteries, etc.), which will result in the disturbance of new ground, requires prior approval of the Price Field Office natural resource specialist.

- This well and its associated facilities shall have identifying signs on location in accordance with 43 CFR 3162.6 requirements.

- All undesirable events (fires, accidents, blowouts, spills, discharges) as specified in NTL 3A will be reported to the Price Field Office natural resource specialist.

- The Price Field Office petroleum engineer shall be notified 24 hours in advance of the plugging of the well (unless the plugging is to take place immediately upon receipt of oral approval), so that a technician may have sufficient time to schedule and witness the plugging operations.

- If operations are to be suspended on a well for more than 30 days, prior approval of the Price Field Office shall be obtained, and notification also given before operations resume.

SURFACE USE
CONDITIONS OF APPROVAL

Project Name: BBC Prickly Pear NE 9 Pad

Operator: Bill Barrett Corporation

List of Wells:

Name	Number	Section	TWP/RNG
Prickly Pear	5-10D-12-15	9	T12SR15E
Prickly Pear	6A-10D-12-15		
Prickly Pear	2-9D-12-15		
Prickly Pear	11A-10D-12-15		
Prickly Pear	5A-10D-12-15		
Prickly Pear	3-10D-12-15		
Prickly Pear	7A-9D-12-15		
Prickly Pear	12A-10D-12-15		
Prickly Pear	6-10D-12-15		
Prickly Pear	4-10D-12-15		
Prickly Pear	8A-9D-12-15		
Prickly Pear	8-9D-12-15		
Prickly Pear	1-9D-12-15		
Prickly Pear	7-9D-12-15		

I To be followed as Conditions of Approval:

The following attachments from the Record of Decision West Tavaputs Plateau Natural Gas Full Field Development Plan:

Attachment 2	Conditions of Approval and Stipulations
Attachment 3	Green River District Reclamation Guidelines
Attachment 4	Programmatic Agreement
Attachment 5	Special Protection Measures for Wildlife
Attachment 6	Agency Wildlife Mitigation Plan
Attachment 7	Long-Term Monitoring Plan for Water Resources
Attachment 8	Mitigation Compliance and Monitoring Plan

II Site Specific Conditions of Approval

1. A pre-construction field meeting may be conducted prior to beginning any dirt work approved under this APD. The operator shall contact Don Stephens with the Price BLM Field Office @ 435-636-3608 at least 48-hours prior to beginning operations so that the meeting can be scheduled. The operator is responsible for having all contractors present (dirt contractors, drilling contractor, pipeline contractor, project oversight personnel, etc.) including the overall field operations superintendent, and for providing all contractors copies of the approved APD(s), project map and BLM Conditions of Approval pertinent to the work that each will be doing.

2. The cuttings trench shall be lined.

3. The cuttings shall not be removed from the location without prior approval of the Authorized Officer.

4. The operator shall on an annual basis report to the BLM the acre feet of water used for the project with a total for each type of source. This report shall contain the information found under monitoring on page 53 of attachment 9 (Biological Opinion) of the WTP ROD and shall be reported to BLM by September 15, of each year.

5. When water is pumped directly from Nine Mile Creek or perennial drainages, the following measures shall be applied to reduce or eliminate direct impacts to habitat for the Colorado River fish species. Where directed by the BLM, the operator will construct erosion control devices (e.g., riprap, bales, and heavy vegetation) at culvert outlets. All construction activities shall be performed to retain natural water flows.

6. Contact Don Stephens, Natural Resource Specialist, (435) 636-3608, Bureau of Land Management, Price Field Office, if there are any questions concerning these surface use COA.

III Standard Conditions of Approval

A. General

1. If any cultural values [sites, artifacts, human remains] are observed during operation of this lease/permit/right-of-way, they will be left intact and the Price Field Manager notified. The authorized officer will conduct an evaluation of the cultural values to establish appropriate mitigation, salvage or treatment. The operator is responsible for informing all persons in the area who are associated with this project that they will be subject to prosecution for knowingly disturbing historic or archaeological sites, or for collecting artifacts. If historic or archaeological materials are uncovered during construction, the operator is to immediately stop work that might further disturb such materials, and contact the authorized BLM officer (AO).

B. Construction

1. Remove all available topsoil from constructed well locations including areas of cut and fill, and stockpile at the site. Topsoil will also be salvaged for use in reclamation on all other areas of surface disturbance (roads, pipelines, etc.). Clearly segregate topsoil from excess spoil material.
2. During construction, emissions of particulate matter from well pad and road construction would be minimized by application of water or other non-saline dust suppressants with at least 50 percent control efficiency. Dust inhibitors (surfacing materials, non-saline dust suppressants, and water) will be used as necessary on unpaved roads that present a fugitive dust problem. The use of chemical dust suppressants on public surface will require prior approval from the BLM Authorized Officer.
3. The operator shall submit a Sundry Notice (Form 3160-5) to BLM for approval prior to construction of any new surface disturbing activities that are not specifically addressed in the approved APD.

C. Operations/Maintenance

1. In accordance with OSHA requirements, a file will be maintained onsite containing current Material Safety Data Sheets (MSDS) for all chemicals, compounds and/or substances which are used in the course of construction, drilling, completion and production operations.

D. Dry Hole/Reclamation

1. Phased reclamation plans will be submitted to BLM for approval prior to individual POD facility abandonment via a Notice of Intent (NOI) Sundry Notice.

2. BLM will not release the performance bond until all disturbed areas associated with the APD/POD have been successfully revegetated (evaluation will be made after the second complete growing season) and has met all other reclamation goals of the surface owner and surface management agency.

3. A Notice of Intent to Abandon and a Subsequent Report of Abandonment must be submitted for abandonment approval.

4. For performance bond release approval, a Final Abandonment Notice (with a surface owner release letter on split-estate) must be submitted prior to a final abandonment evaluation by BLM.

E. Producing Well

1. An interim reclamation plan shall be submitted to BLM within 90 days of APD approval.
2. Upgrade and maintain access roads and drainage control (e.g., culverts, drainage dips, ditching, crowning, surfacing, etc.) as necessary and as directed by the BLM Authorized Officer to prevent soil erosion and accommodate safe, environmentally-sound access.
3. Prior to construction of production facilities not specifically addressed in the APD, the operator shall submit a Sundry Notice to the BLM Authorized Officer for approval.

F. Roads and Pipelines

1. Roads constructed on BLM lands shall be constructed to allow for drainage and erosion control. The operator is responsible for maintenance of all roads authorized through the lease or right-of-way. Construction and maintenance shall comply with Class III Road Standards with a 16-ft wide graveled travel surface as described in BLM Manual Section 9113, and the BLM Gold Book standards, except as modified by BLM. Maintenance may include but is not limited to grading, applying gravel, snow removal, ditch cleaning, and headcut restoration/prevention.
2. The operator may be required to provide an inspector under the direction of a registered professional engineer (PE) at all times during road construction.
3. Erosion-control structures such as water bars, diversion channels, and terraces will be constructed to divert water and reduce soil erosion on the disturbed area. Road ditch turnouts shall be equipped with energy dissipaters as needed to avoid erosion. Where roads interrupt overland sheet-flow and convert this runoff to channel flow, ditch turnouts shall be designed to reconvert channel flow to sheet flow. As necessary cut banks, road drainages, and road crossings shall be armored or otherwise engineered to prevent headcutting.

FORM 9

STATE OF UTAH
DEPARTMENT OF NATURAL RESOURCES
DIVISION OF OIL, GAS, AND MINING

5.LEASE DESIGNATION AND SERIAL NUMBER: UTU-73006

SUNDRY NOTICES AND REPORTS ON WELLS

Do not use this form for proposals to drill new wells, significantly deepen existing wells below current bottom-hole depth, reenter plugged wells, or to drill horizontal laterals. Use APPLICATION FOR PERMIT TO DRILL form for such proposals.

6. IF INDIAN, ALLOTTEE OR TRIBE NAME:

7.UNIT or CA AGREEMENT NAME: PRICKLY PEAR

1. TYPE OF WELL Gas Well

8. WELL NAME and NUMBER: PRICKLY PEAR UF 5-10D-12-15

2. NAME OF OPERATOR: BILL BARRETT CORP

9. API NUMBER: 43007503360000

3. ADDRESS OF OPERATOR: 1099 18th Street Ste 2300 , Denver, CO, 80202

PHONE NUMBER: 303 312-8134 Ext

9. FIELD and POOL or WILDCAT: NINE MILE CANYON

4. LOCATION OF WELL
FOOTAGES AT SURFACE: 1622 FNL 0148 FEL
QTR/QTR, SECTION, TOWNSHIP, RANGE, MERIDIAN: Qtr/Qtr: SENE Section: 09 Township: 12.0S Range: 15.0E Meridian: S

COUNTY: CARBON

STATE: UTAH

11. CHECK APPROPRIATE BOXES TO INDICATE NATURE OF NOTICE, REPORT, OR OTHER DATA

TYPE OF SUBMISSION	TYPE OF ACTION		
✓ NOTICE OF INTENT Approximate date work will start: 5/16/2013	☐ ACIDIZE	☐ ALTER CASING	☐ CASING REPAIR
	☐ CHANGE TO PREVIOUS PLANS	☐ CHANGE TUBING	☐ CHANGE WELL NAME
	☐ CHANGE WELL STATUS	☐ COMMINGLE PRODUCING FORMATIONS	☐ CONVERT WELL TYPE
☐ SUBSEQUENT REPORT Date of Work Completion:	☐ DEEPEN	☐ FRACTURE TREAT	☐ NEW CONSTRUCTION
	☐ OPERATOR CHANGE	☐ PLUG AND ABANDON	☐ PLUG BACK
	☐ PRODUCTION START OR RESUME	☐ RECLAMATION OF WELL SITE	☐ RECOMPLETE DIFFERENT FORMATION
☐ SPUD REPORT Date of Spud:	☐ REPERFORATE CURRENT FORMATION	☐ SIDETRACK TO REPAIR WELL	☐ TEMPORARY ABANDON
	☐ TUBING REPAIR	☐ VENT OR FLARE	☐ WATER DISPOSAL
☐ DRILLING REPORT Report Date:	☐ WATER SHUTOFF	☐ SI TA STATUS EXTENSION	✓ APD EXTENSION
	☐ WILDCAT WELL DETERMINATION	☐ OTHER	OTHER:

12. DESCRIBE PROPOSED OR COMPLETED OPERATIONS. Clearly show all pertinent details including dates, depths, volumes, etc.

This sundry is being submitted to request an extension to the APD that expires on 5/16/2013. BBC has federal approval on this well that does not expire until 2015. Please contact Brady Riley at 303-312-8115 with questions.

Approved by the Utah Division of Oil, Gas and Mining

Date: May 14, 2013

By:

NAME (PLEASE PRINT)	PHONE NUMBER	TITLE
Brady Riley	303 312-8115	Permit Analyst

SIGNATURE	DATE
N/A	5/3/2013

RECEIVED: May. 03, 2013

The Utah Division of Oil, Gas, and Mining

- State of Utah
- Department of Natural Resources

Electronic Permitting System - Sundry Notices

Request for Permit Extension Validation Well Number 43007503360000

API: 43007503360000
Well Name: PRICKLY PEAR UF 5-10D-12-15
Location: 1622 FNL 0148 FEL QTR SENE SEC 09 TWNP 120S RNG 150E MER S
Company Permit Issued to: BILL BARRETT CORP
Date Original Permit Issued: 5/16/2012

The undersigned as owner with legal rights to drill on the property as permitted above, hereby verifies that the information as submitted in the previously approved application to drill, remains valid and does not require revision. Following is a checklist of some items related to the application, which should be verified.

- **If located on private land, has the ownership changed, if so, has the surface agreement been updated?** ○ **Yes** ◉ **No**
- **Have any wells been drilled in the vicinity of the proposed well which would affect the spacing or siting requirements for this location?** ○ **Yes** ◉ **No**
- **Has there been any unit or other agreements put in place that could affect the permitting or operation of this proposed well?** ○ **Yes** ◉ **No**
- **Have there been any changes to the access route including ownership, or rightof- way, which could affect the proposed location?** ○ **Yes** ◉ **No**
- **Has the approved source of water for drilling changed?** ○ **Yes** ◉ **No**
- **Have there been any physical changes to the surface location or access route which will require a change in plans from what was discussed at the onsite evaluation?** ○ **Yes** ◉ **No**
- **Is bonding still in place, which covers this proposed well?** ◉ **Yes** ○ **No**

Signature: Brady Riley **Date:** 5/3/2013
Title: Permit Analyst **Representing:** BILL BARRETT CORP

RECEIVED: May. 03, 2013

STATE OF UTAH
DEPARTMENT OF NATURAL RESOURCES
DIVISION OF OIL, GAS, AND MINING

FORM 9

5.LEASE DESIGNATION AND SERIAL NUMBER: UTU-73006

SUNDRY NOTICES AND REPORTS ON WELLS

Do not use this form for proposals to drill new wells, significantly deepen existing wells below current bottom-hole depth, reenter plugged wells, or to drill horizontal laterals. Use APPLICATION FOR PERMIT TO DRILL form for such proposals.

6. IF INDIAN, ALLOTTEE OR TRIBE NAME:

7.UNIT or CA AGREEMENT NAME: PRICKLY PEAR

1. TYPE OF WELL Gas Well

8. WELL NAME and NUMBER: PRICKLY PEAR UF 5-10D-12-15

2. NAME OF OPERATOR: ENERVEST OPERATING, LLC

9. API NUMBER: 43007503360000

3. ADDRESS OF OPERATOR: 1001 Fannin Street, Suite 800 , Houston, TX, 77002

PHONE NUMBER: 713 659-3500 Ext

9. FIELD and POOL or WILDCAT: NINE MILE CANYON

4. LOCATION OF WELL
FOOTAGES AT SURFACE: 1622 FNL 0148 FEL
QTR/QTR, SECTION, TOWNSHIP, RANGE, MERIDIAN: Qtr/Qtr: SENE Section: 09 Township: 12.0S Range: 15.0E Meridian: S

COUNTY: CARBON

STATE: UTAH

11.
CHECK APPROPRIATE BOXES TO INDICATE NATURE OF NOTICE, REPORT, OR OTHER DATA

TYPE OF SUBMISSION	TYPE OF ACTION		
✓ NOTICE OF INTENT Approximate date work will start: 7/15/2014	☐ ACIDIZE	☐ ALTER CASING	☐ CASING REPAIR
	☐ CHANGE TO PREVIOUS PLANS	☐ CHANGE TUBING	☐ CHANGE WELL NAME
	☐ CHANGE WELL STATUS	☐ COMMINGLE PRODUCING FORMATIONS	☐ CONVERT WELL TYPE
☐ SUBSEQUENT REPORT Date of Work Completion:	☐ DEEPEN	☐ FRACTURE TREAT	☐ NEW CONSTRUCTION
	☐ OPERATOR CHANGE	☐ PLUG AND ABANDON	☐ PLUG BACK
	☐ PRODUCTION START OR RESUME	☐ RECLAMATION OF WELL SITE	☐ RECOMPLETE DIFFERENT FORMATION
☐ SPUD REPORT Date of Spud:	☐ REPERFORATE CURRENT FORMATION	☐ SIDETRACK TO REPAIR WELL	☐ TEMPORARY ABANDON
	☐ TUBING REPAIR	☐ VENT OR FLARE	☐ WATER DISPOSAL
☐ DRILLING REPORT Report Date:	☐ WATER SHUTOFF	☐ SI TA STATUS EXTENSION	✓ APD EXTENSION
	☐ WILDCAT WELL DETERMINATION	☐ OTHER	OTHER:

12. DESCRIBE PROPOSED OR COMPLETED OPERATIONS. Clearly show all pertinent details including dates, depths, volumes, etc.

EnerVest Operating, LLC requests a one year drilling permit extension for the referenced well. This is the second extension that has been requested.

Approved by the Utah Division of Oil, Gas and Mining
Date: May 12, 2014
By:

NAME (PLEASE PRINT)	PHONE NUMBER	TITLE
Don Hamilton	435 650-3866	Permitting Agent

SIGNATURE	DATE
N/A	5/7/2014

RECEIVED: May. 07, 2014

The Utah Division of Oil, Gas, and Mining

- State of Utah
- Department of Natural Resources

Electronic Permitting System - Sundry Notices

Request for Permit Extension Validation Well Number 43007503360000

API: 43007503360000
Well Name: PRICKLY PEAR UF 5-10D-12-15
Location: 1622 FNL 0148 FEL QTR SENE SEC 09 TWNP 120S RNG 150E MER S
Company Permit Issued to: ENERVEST OPERATING, LLC
Date Original Permit Issued: 5/16/2012

The undersigned as owner with legal rights to drill on the property as permitted above, hereby verifies that the information as submitted in the previously approved application to drill, remains valid and does not require revision. Following is a checklist of some items related to the application, which should be verified.

- **If located on private land, has the ownership changed, if so, has the surface agreement been updated?** ○ **Yes** ◉ **No**
- **Have any wells been drilled in the vicinity of the proposed well which would affect the spacing or siting requirements for this location?** ○ **Yes** ◉ **No**
- **Has there been any unit or other agreements put in place that could affect the permitting or operation of this proposed well?** ○ **Yes** ◉ **No**
- **Have there been any changes to the access route including ownership, or rightof- way, which could affect the proposed location?** ○ **Yes** ◉ **No**
- **Has the approved source of water for drilling changed?** ○ **Yes** ◉ **No**
- **Have there been any physical changes to the surface location or access route which will require a change in plans from what was discussed at the onsite evaluation?** ○ **Yes** ◉ **No**
- **Is bonding still in place, which covers this proposed well?** ◉ **Yes** ○ **No**

Signature: Don Hamilton **Date:** 5/7/2014
Title: Permitting Agent **Representing:** ENERVEST OPERATING, LLC

RECEIVED: May. 07, 2014

FORM 9

STATE OF UTAH
DEPARTMENT OF NATURAL RESOURCES
DIVISION OF OIL, GAS, AND MINING

5.LEASE DESIGNATION AND SERIAL NUMBER: UTU-73006

SUNDRY NOTICES AND REPORTS ON WELLS

Do not use this form for proposals to drill new wells, significantly deepen existing wells below current bottom-hole depth, reenter plugged wells, or to drill horizontal laterals. Use APPLICATION FOR PERMIT TO DRILL form for such proposals.

6. IF INDIAN, ALLOTTEE OR TRIBE NAME:

7.UNIT or CA AGREEMENT NAME: PRICKLY PEAR

1. TYPE OF WELL Gas Well

8. WELL NAME and NUMBER: PRICKLY PEAR UF 5-10D-12-15

2. NAME OF OPERATOR: ENERVEST OPERATING, LLC

9. API NUMBER: 43007503360000

3. ADDRESS OF OPERATOR: 1001 Fannin Street, Suite 800 , Houston, TX, 77002

PHONE NUMBER: 713 659-3500 Ext

9. FIELD and POOL or WILDCAT: NINE MILE CANYON

4. LOCATION OF WELL
FOOTAGES AT SURFACE: 1622 FNL 0148 FEL
QTR/QTR, SECTION, TOWNSHIP, RANGE, MERIDIAN: Qtr/Qtr: SENE Section: 09 Township: 12.0S Range: 15.0E Meridian: S

COUNTY: CARBON

STATE: UTAH

11. CHECK APPROPRIATE BOXES TO INDICATE NATURE OF NOTICE, REPORT, OR OTHER DATA

TYPE OF SUBMISSION

- ✓ NOTICE OF INTENT — Approximate date work will start: 8/15/2015
- ☐ SUBSEQUENT REPORT — Date of Work Completion:
- ☐ SPUD REPORT — Date of Spud:
- ☐ DRILLING REPORT — Report Date:

TYPE OF ACTION

☐ ACIDIZE	☐ ALTER CASING	☐ CASING REPAIR
☐ CHANGE TO PREVIOUS PLANS	☐ CHANGE TUBING	☐ CHANGE WELL NAME
☐ CHANGE WELL STATUS	☐ COMMINGLE PRODUCING FORMATIONS	☐ CONVERT WELL TYPE
☐ DEEPEN	☐ FRACTURE TREAT	☐ NEW CONSTRUCTION
☐ OPERATOR CHANGE	☐ PLUG AND ABANDON	☐ PLUG BACK
☐ PRODUCTION START OR RESUME	☐ RECLAMATION OF WELL SITE	☐ RECOMPLETE DIFFERENT FORMATION
☐ REPERFORATE CURRENT FORMATION	☐ SIDETRACK TO REPAIR WELL	☐ TEMPORARY ABANDON
☐ TUBING REPAIR	☐ VENT OR FLARE	☐ WATER DISPOSAL
☐ WATER SHUTOFF	☐ SI TA STATUS EXTENSION	✓ APD EXTENSION
☐ WILDCAT WELL DETERMINATION	☐ OTHER	OTHER:

12. DESCRIBE PROPOSED OR COMPLETED OPERATIONS. Clearly show all pertinent details including dates, depths, volumes, etc.

EnerVest Operating LLC requests a one year drilling permit extension for the referenced well. This is the second extension that has been requested.

Approved by the
February 03, 2015
Oil, Gas and Mining

Date:

By:

NAME (PLEASE PRINT)	PHONE NUMBER	TITLE
Don Hamilton	435 650-3866	Permitting Agent

SIGNATURE	DATE
N/A	2/3/2015

RECEIVED: Feb. 03, 2015

The Utah Division of Oil, Gas, and Mining

- State of Utah
- Department of Natural Resources

Electronic Permitting System - Sundry Notices

Request for Permit Extension Validation Well Number 43007503360000

API: 43007503360000
Well Name: PRICKLY PEAR UF 5-10D-12-15
Location: 1622 FNL 0148 FEL QTR SENE SEC 09 TWNP 120S RNG 150E MER S
Company Permit Issued to: ENERVEST OPERATING, LLC
Date Original Permit Issued: 5/16/2012

The undersigned as owner with legal rights to drill on the property as permitted above, hereby verifies that the information as submitted in the previously approved application to drill, remains valid and does not require revision. Following is a checklist of some items related to the application, which should be verified.

- **If located on private land, has the ownership changed, if so, has the surface agreement been updated?** ○ **Yes** ◉ **No**
- **Have any wells been drilled in the vicinity of the proposed well which would affect the spacing or siting requirements for this location?** ○ **Yes** ◉ **No**
- **Has there been any unit or other agreements put in place that could affect the permitting or operation of this proposed well?** ○ **Yes** ◉ **No**
- **Have there been any changes to the access route including ownership, or rightof- way, which could affect the proposed location?** ○ **Yes** ◉ **No**
- **Has the approved source of water for drilling changed?** ○ **Yes** ◉ **No**
- **Have there been any physical changes to the surface location or access route which will require a change in plans from what was discussed at the onsite evaluation?** ○ **Yes** ◉ **No**
- **Is bonding still in place, which covers this proposed well?** ◉ **Yes** ○ **No**

Signature: Don Hamilton **Date:** 2/3/2015
Title: Permitting Agent **Representing:** ENERVEST OPERATING, LLC

RECEIVED: Feb. 03, 2015

GARY R. HERBERT
Governor

SPENCER J. COX
Lieutenant Governor

State of Utah

DEPARTMENT OF NATURAL RESOURCES

MICHAEL R. STYLER
Executive Director

Division of Oil, Gas and Mining

JOHN R. BAZA
Division Director

May 19, 2016

Enervest Operating, LLC
1001 Fannin St Ste 800
Houston, TX 77002

Re: APDs Rescinded for Enervest Operating, LLC, Carbon County

Ladies and Gentlemen:

Enclosed find the list of APDs that is being rescinded. No drilling activity at these locations has been reported to the division. Therefore, approval to drill these wells is hereby rescinded as of May 19, 2016.

A new APD must be filed with this office for approval prior to the commencement of any future work on the subject location.

If any previously unreported operations have been performed on this well location, it is imperative that you notify the Division immediately.

Sincerely,

Diana Mason
Environmental Scientist

cc: Well File
Bureau of Land Management, Price

1594 West North Temple, Suite 1210, Salt Lake City, UT 84116
PO Box 145801, Salt Lake City, UT 84114-5801
telephone (801) 538-5340 • facsimile (801) 359-3940 • TTY (801) 538-7458 • *www.ogm.utah.gov*

UTAH DNR OIL, GAS & MINING

Prickly Pear UF 15A-10D-12-15	43-007-50287
Prickly Pear UF 13-10D-12-15	43-007-50288
Prickly Pear UF 15-10D-12-15	43-007-50289
Prickly Pear UF 16A-10D-12-15	43-007-50290
Prickly Pear UF 9-10D-12-15	43-007-50291
Prickly Pear UF 10-10D-12-15	43-007-50293
Prickly Pear UF 16-10D-12-15	43-007-50294
Prickly Pear UF 13-11D-12-15	43-007-50295
Prickly Pear UF 13A-11D-12-15	43-007-50296
Prickly Pear UF 12-11D-12-15	43-007-50297
Prickly Pear UF 13A-10D-12-15	43-007-50298
Prickly Pear UF 12-10D-12-15	43-007-50299
Prickly Pear UF 9A-17D-12-15	43-007-50306
Prickly Pear UF 8A-17D-12-15	43-007-50307
Prickly Pear UF 10A-17D-12-15	43-007-50308
Prickly Pear UF 3-7D-12-15	43-007-50309
Prickly Pear UF 16A-17D-12-15	43-007-50310
Prickly Pear UF 6-7D-12-15	43-007-50311
Prickly Pear UF 15A-17D-12-15	43-007-50312
Prickly Pear UF 6A-7D-12-15	43-007-50313
Prickly Pear UF 7A-7D-12-15	43-007-50314
Prickly Pear UF 8A-7D-12-15	43-007-50315
Prickly Pear UF 6X-17D-12-15	43-007-50316
Prickly Pear UF 11A-17D-12-15	43-007-50317
Prickly Pear UF 15B-17D-12-15	43-007-50318
Prickly Pear UF 8A-20D-12-15	43-007-50319
Prickly Pear UF 1-7D-12-15	43-007-50320
Prickly Pear UF 7A-20D-12-15	43-007-50321
Prickly Pear UF 9A-20D-12-15	43-007-50322
Prickly Pear UF 10A-20D-12-15	43-007-50323
Prickly Pear UF 10-20D-12-15	43-007-50324
Prickly Pear UF 2-7D-12-15	43-007-50325
Prickly Pear UF 14A-20D-12-15	43-007-50326
Prickly Pear UF 16A-20D-12-15	43-007-50327
Prickly Pear UF 15A-20D-12-15	43-007-50328
Prickly Pear UF 8-7D-12-15	43-007-50329
Prickly Pear UF 15-20D-12-15	43-007-50330
Prickly Pear UF 7-7D-12-15	43-007-50331
Prickly Pear UF 6-10D-12-15	43-007-50332
Prickly Pear UF 5A-10D-12-15	43-007-50333
Prickly Pear UF 11A-10D-12-15	43-007-50334
Prickly Pear UF 6A-10D-12-15	43-007-50335
Prickly Pear UF 5-10D-12-15	43-007-50336
Prickly Pear UF 12A-10D-12-15	43-007-50338

Prickly Pear UF 3-10D-12-15	43-007-50339
Prickly Pear UF 4-10D-12-15	43-007-50340
Prickly Pear UF 8-9D-12-15	43-007-50341
Prickly Pear UF 8A-9D-12-15	43-007-50342
Prickly Pear UF 7A-9D-12-15	43-007-50343
Prickly Pear UF 7-9D-12-15	43-007-50344