Form 3160-3
(December 1990)

001

UNITED STATES
DEPARTMENT OF THE INTERIOR
BUREAU OF LAND MANAGEMENT

SUBMIT IN TRIPLICATE*
(Other instructions on reverse side)

Form approved.
Budget Bureau No. 1004-0136
Expires: December 31, 1991

APPLICATION FOR PERMIT TO DRILL OR DEEPEN

5. LEASE DESIGNATION AND SERIAL NO.: UTU-80559

6. IF INDIAN, ALLOTTEE OR TRIBE NAME: N/A

7. UNIT AGREEMENT NAME: N/A

8. FARM OR LEASE NAME, WELL NO.: 10-1

9. API WELL NO.: 43-007-30959

10. FIELD AND POOL, OR WILDCAT: ~~undesignated~~ Wildcat

11. SEC., T., R., M., OR BLK. A: NW/4 NE/4, Section 10, T14S, R11E, SLB&M

12. COUNTY OR PARISH: Carbon

13. STATE: Utah

1a. TYPE OF WORK: DRILL ☒ DEEPEN ☐

b. TYPE OF WELL: OIL WELL ☐ GAS WELL ☒ OTHER — SINGLE ZONE ☒ MULTIPLE ZONE ☐

2. NAME OF OPERATOR: WhitMar Exploration Company

3. ADDRESS AND TELEPHONE NO.: 1021 Main Street, Suite 1100, Houston, TX 77002 (713) 739-7300

4. LOCATION OF WELL (Report location clearly and in accordance with any State requirements.*)
At surface: 610' FNL, 1,835' FEL 528312 X 4386409 Y 39.62887 -110.67011
At proposed prod. zone: 610' FNL, 1,835' FEL

14. DISTANCE IN MILES AND DIRECTION FROM NEAREST TOWN OR POST OFFICE*: 6.93 miles northeast of Wellington, Utah

15. DISTANCE FROM PROPOSED* LOCATION TO NEAREST PROPERTY OR LEASE LINE, FT. (Also to nearest drlg. unit line, if any): 1,933'

16. NO. OF ACRES IN LEASE: 1,970.26

17. NO. OF ACRES ASSIGNED TO THIS WELL: 160 acres

18. DISTANCE FROM PROPOSED LOCATION TO NEAREST WELL, DRILLING, COMPLETED, OR APPLIED FOR, ON THIS LEASE, FT.: 2,900'

19. PROPOSED DEPTH: 2,900'

20. ROTARY OR CABLE TOOLS: Rotary

21. ELEVATIONS (Show whether DF, RT, GR, etc.): 5,756' GR

22. APPROX. DATE WORK WILL START*: July 15, 2004

23. PROPOSED CASING AND CEMENTING PROGRAM

SIZE OF HOLE	GRADE, SIZE OF CASING	WEIGHT PER FOOT	SETTING DEPTH	QUANTITY OF CEMENT
12-1/4"	8-5/8" J-55 ST&C	24	350'	200 sacks Howco Prem Plus V + $CaCl_2$ + flocele
7-7/8"	5-1/2" J-55 ST&C	15.5	2,800'	90 sacks Howco CBM Light LCM / 80 sacks Howco CBM Light

Federal Approval of this Action is Necessary

RECEIVED
APR 29 2004
DIV. OF OIL, GAS & MINING

CONFIDENTIAL

IN ABOVE SPACE DESCRIBE PROPOSED PROGRAM: If proposal is to deepen, give data present productive zone and proposed new productive zone. If proposal is to drill or deepen directionally, give pertinent data on subsurface locations and measured and true vertical depths. Give blowout preventer program, if any.

24. SIGNED [signature] TITLE Agent for WhitMar DATE April 26, 2004

(This space for Federal or State office use)

PERMIT NO. 43-007-30959 APPROVAL DATE

Application approval does not warrant or certify that the applicant holds legal or equitable title to those rights in the subject lease which would entitle the applicant to conduct operations thereon.
CONDITIONS OF APPROVAL, IF ANY:

APPROVED BY [signature] TITLE BRADLEY G. HILL ~~ENVIRONMENTAL SCIENTIST III~~ DATE 06-24-04

*See Instructions On Reverse Side

Title 18 U.S.C. Section 1001, makes it a crime for any person knowingly and willfully to make to any department or agency or the

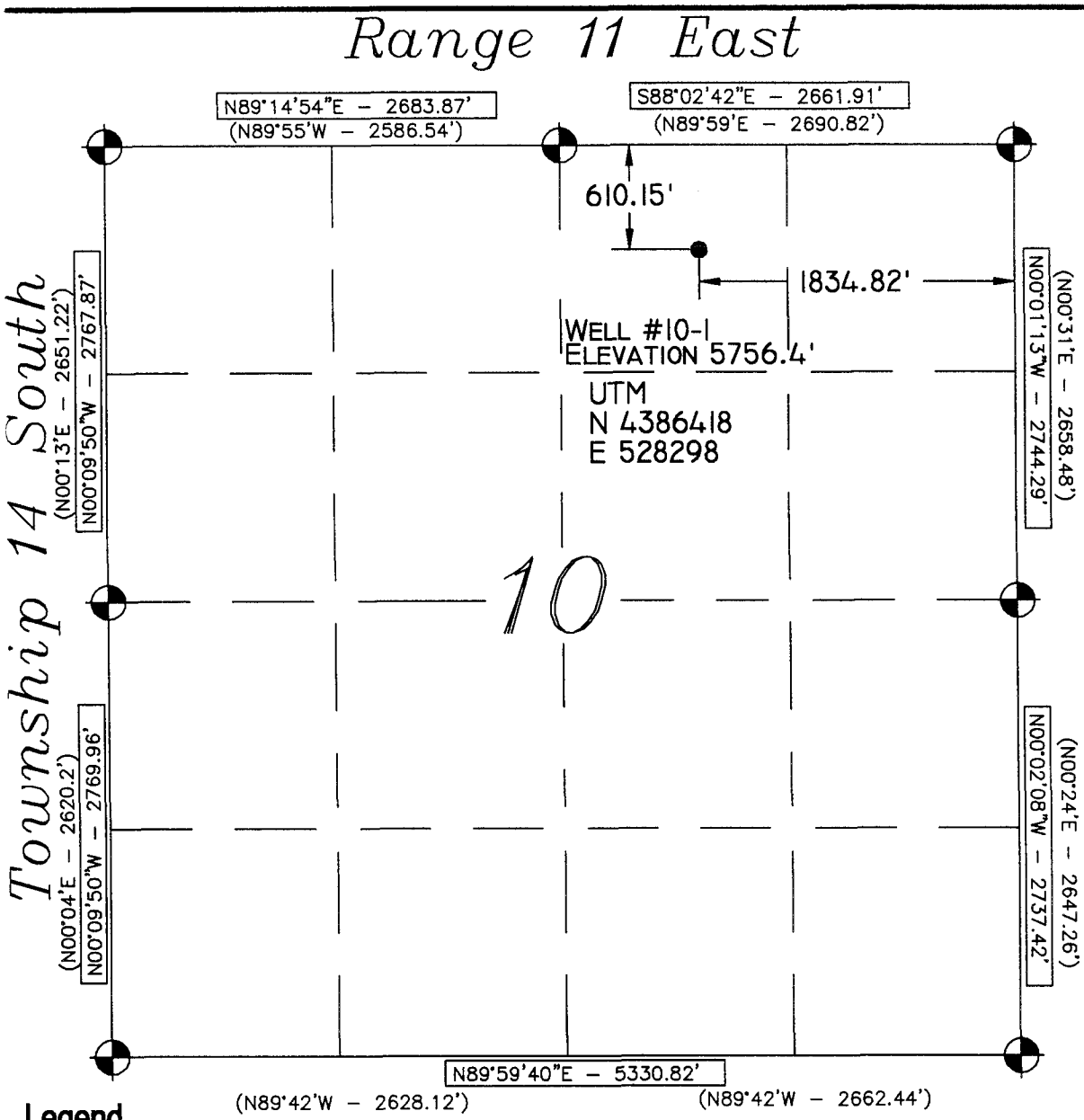

Location:
THE WELL LOCATION WAS DETERMINED USING A TRIMBLE 4700 GPS SURVEY GRADE UNIT.

Basis of Bearing:
THE BASIS OF BEARING IS GPS MEASURED.

GLO Bearing:
THE BEARINGS INDICATED ARE PER THE RECORDED PLAT OBTAINED FROM THE U.S. LAND OFFICE.

Basis of Elevation:
BASIS OF ELEVATION OF 5861' BEING AT THE NORTHEAST CORNER OF SECTION 3, TOWNSHIP 14 SOUTH, RANGE 11 EAST, SALT LAKE BASE & MERIDIAN, AS SHOWN ON THE DEADMAN CANYON QUADRANGLE 7.5 MINUTE SERIES MAP.

Description of Location:
PROPOSED DRILL HOLE LOCATED IN THE NW 1/4, NE 1/4 OF SECTION 10; BEING 610.15' SOUTH AND 1834.82' WEST FROM THE NORTHEAST CORNER OF SECTION 10, T14S, R11E, SALT LAKE BASE AND MERIDIAN.

Surveyor's Certificate:
I, ALBERT J. SPENSKO, A REGISTERED PROFESSIONAL LAND SURVEYOR, HOLDING CERTIFICATE 146652 STATE OF UTAH, DO HEREBY CERTIFY THAT THE INFORMATION ON THIS DRAWING IS A TRUE AND ACCURATE SURVEY BASED ON DATA OF RECORD AND WAS CONDUCTED UNDER MY PERSONAL DIRECTION AND SUPERVISION AS SHOWN HEREON.

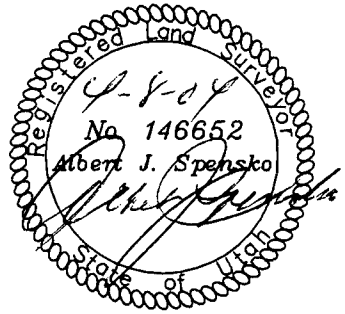

Talon Resources, Inc.
195 North 100 West
Huntington, Utah 84528
Ph: 435-687-5310
Fax: 435-687-5311

WHITMAR EXPLORATION COMPANY
WELL #10-1
Section 10, T14S, R11E, S.L.B.&M.
Carbon County, Utah

Drawn By: J. STANSFIELD	Checked By: L.W.J./A.P.C.
Drawing No. A-1	Date: 04/02/04
	Scale: 1" = 1000'
Sheet 1 of 4	Job No. 1288

Legend
- ● Drill Hole Location
- Brass Cap (Found)
- ○ Brass Cap (Searched for, but not found)
- △ Calculated Corner
- ( ) GLO
- GPS Measured

NOTE:
UTM AND LATITUDE / LONGITUDE COORDINATES ARE DERIVED USING A GPS WASS SYSTEM AND ARE SHOWN IN NAD 27 DATUM.

LAT/LONG
39°40'44"N
110°40'13"W

GRAPHIC SCALE
0 500' 1000'
(IN FEET)
1 inch = 1000 ft.

002

TALON RESOURCES INC

April 26, 2004

Mr. Eric Jones
Petroleum Engineer
Bureau of Land Management
82 East Dogwood
Moab, Utah 84532

RE: Application for Permit to Drill—WhitMar Exploration Company
10-1, 610' FNL, 1,835' FEL, NW/4 NE/4, Section 10, T14S, R11E, SLB&M, Carbon County, Utah

Dear Mr. Jones:

On behalf of WhitMar Exploration Company (WhitMar), Talon Resources, Inc. respectfully submits the enclosed original and two copies of the *Application for Permit to Drill (APD)* for the above referenced well. Included with the APD is the following supplemental information:

Exhibit "A" - Survey plats and layouts of the proposed well site;

Exhibit "B" - Proposed location maps with pipe, power, and road corridors;

Exhibit "C" - Drilling site layout;

Exhibit "D" - Drilling Program;

Exhibit "E" - Multi Point Surface Use Plan;

Exhibit "F" - Typical road cross-section;

Exhibit "G" - Typical BOP diagram;

Exhibit "H" - Typical wellhead manifold diagram.

Please accept this letter as WhitMar's, written request for confidential treatment of all information contained in and pertaining to this application.

Thank you very much for your timely consideration of this application. Please feel free to contact myself or Whitney Marvin of WhitMar at 713-739-7300 if you have any questions or need additional information.

Sincerely,

Allen Childs
Agent for WhitMar

cc: Whitney Marvin, WhitMar
Don Stephens, BLM, Price Field Office
Diana Whitney, DOGM, State Office

RECEIVED
APR 2 9 2004
DIV. OF OIL, GAS & MINING

CONFIDENTIAL

P.O. # 1230 195 N. 100 West Huntington, Utah 84528
(435) 687-5310 (435) 687-5311 talon@etv.net

Drilling Program

Exhibit "D"

Attached to BLM Form 3
WhitMar Exploration Company
10-1
NW/4 NE/4, Sec. 10, T14S, R11E, SLB & M
610' FNL, 1,835' FEL
Carbon County, Utah

1. The Geologic Surface Formation

   Blue Gate Shale Member of the Mancos Shale

2. Estimated Tops of Important Geologic Markers

Marker	Depth (MD)
Mancos Blue Gate Marker	2,200'
Ferron Sandstone	2,500'
Total Depth	2,800'

3. Projected Gas & Water Zones

   Ferron coals and sandstones 2,500' to 2,760'

   No groundwater is expected to be encountered. Water encountered will be reported on a Form 7 "Report of Water Encountered During Drilling".

   Casing & cementing will be done to protect potentially productive hydrocarbons, lost circulation zones, abnormal pressure zones, and prospectively valuable mineral deposits. All indications of usable water will be reported.

   Surface casing will be tested to 1000 psi.

4. The Proposed Casing and Cementing Programs

HOLE SIZE	SETTING DEPTH (INTERVAL)	SIZE (OD)	WEIGHT,GRADE & JOINT	CONDITION
12–1/4"	350'	8-5/8"	24# J-55 ST&C	New
7-7/8"	2,800'	5-1/2"	15.5# J-55 ST&C	New

CONFIDENTIAL

Cement Program – **Every attempt will be made to bring cement back to surface**

Surface Casing: 200 sacks Howco Premium Plus V + CaCl + Flocele;
Weight: 15.6 #/gal
Yield: 1.20 cu.ft/sk

Production Casing: 90 sacks Howco CBM Light LCM
Weight: 10.5 #/gal
Yield: 4.59 cu.ft/sk
80 sacks Howco CBM Light
Weight: 13.0 #/gal
Yield: 1.99 cu.ft/sk

The following shall be entered in the driller's log:

1) Blowout preventer pressure tests, including test pressures and results;

2) Blowout preventer tests for proper functioning;

3) Blowout prevention drills conducted;

4) Casing run, including size, grade, weight, and depth set;

5) How the pipe was cemented, including amount of cement, type, whether cement circulated, location of the cementing tools, etc.;

6) Waiting on cement time for each casing string;

7) Casing pressure tests after cementing, including test pressures and results.

5. The Operator's Minimum Specifications for Pressure Control

Exhibit "G" is a schematic diagram of the blowout preventer equipment. A double gate 2000 psi BOP will be used with a rotating head. This equipment will be tested to 2000 psi. All tests will be recorded in a Driller's Report Book. Physical operation of BOP's will be checked on each trip.

6. The Type and Characteristics of the Proposed Circulating Muds

0 - 350'	12-1/4" hole	Drill with air, will mud-up if necessary.
350' - TD	7-7/8" hole	Drill with air, will mud-up if necessary. 500 psi @ 1500-2300 Scf.

If fluid is necessary it will be fresh water + Quik-Gel + Pac-R + Therma-Thin + Barolift at 8.5 – 8.8 #/gal maximum.

CONFIDENTIAL

7. The Testing, Logging and Coring Programs are as followed

350-TD Schlumberger Neutron-Density, PEX-AITH

Overpressuring
No abnormal pressures or temperatures have been noted or reported in wells drilled in the area nor at the depths anticipated in this well. Bottom hole pressure expected is 1000 psi max. No hydrogen sulfide or other hazardous gases or fluids have been found, reported or are known to exist at these depths in the area.

Lost Circulation
Previous drilling records in this area indicate potential lost circulation while drilling or cementing the production casing for the wells. We plan to include lost circulation material in the production cement and have lost circulation material /additives on location while drilling.

8. Anticipated Starting Date and Duration of the Operations.

The well will be drilled approx.: July 15, 2004.

Verbal and/or written notifications listed below shall be submitted in accordance with instructions from the Bureau of Land Management:

(a) prior to beginning construction;

(b) prior to spudding;

(c) prior to running any casing or BOP tests;

(d) prior to plugging the well, for verbal plugging instructions.

Spills, blowouts, fires, leaks, accidents or other unusual occurrences shall be reported to the Bureau of Land Management and the Division of Oil, Gas & Mining immediately.

CONFIDENTIAL

Bureau of Land Management
Moab District / Price Field Office
Application for Permit to Drill
On-Site Inspection Checklist

Company: WhitMar Exploration Company Well No.: 10-1

Location: *Section 10, T14S, R11E SLB & M*

Lease No.: *Federal UTU-80559*

On-Site Inspection Date: 03-23-04

B. THIRTEEN POINT SURFACE USE PLAN

The dirt contractor will be provided with an approved copy of the surface use plan of operations before initiating construction.

1. Existing Roads:

a. Proposed route to location: *From Wellington, Utah proceed east along SR-6 for approximately 2.35 miles. Turn left off of SR-6 onto East Coal Creek Road, proceed north on East Coal Creek Road 3.17 miles to the Knight Ideal Mine Road. Proceed north on the Knight Ideal Mine Road for 3.70 miles to the existing access road leaving the road surface southeast to the proposed well. (See Exhibit "B").*

b. Location of proposed well in relation to town or other reference point: *Approximately 6.93 miles northeast of Wellington, UT.*

c. Contact the County Road Department for use of county roads. The use of Carbon County roads will require an encroachment permit from the Carbon County Road Department:
Encroachment permit is presently pending for the Knight Ideal Mine Road.

2. Planned Access Roads:

a. Location (centerline): *From the existing Knight Ideal Mine road continue southeast approximately 2,900' to the proposed well. Planned access begins at a point approximately 1,800' FNL 600' FEL, Section 10, T14S, R11E.*

b. Length of new access to be constructed: *Approximately 50'*

c. Length of existing roads to be upgraded: *Approximately 2,900'*

d. Maximum total disturbed width: *60'*

e. Maximum travel surface width: *25'*

f. Maximum grades: *10%*

g. Turnouts: *None*

h. Surface materials: *Native*

i. Drainage (crowning, ditching, culverts, etc): *Roads will be crowned with bar ditches on both sides and approximately3 culverts placed along the new road.*

i. Cattleguards: *One cattleguard is proposed at the fence near the county road.*

k. Length of new and/or existing roads which lie outside the lease boundary for which a BLM right-of-way is required: *None*

l. Other:

Surface disturbance and vehicular travel will be limited to the approved location access road. Any additional area needed must be approved by the Area Manager in advance.

If a right-a-way is necessary, no surface disturbing activities shall take place on the subject right-of-way until the associated APD is approved. The holder will adhere to conditions of approval in the Surface Use Program of the approved APD, relevant to any right-of-way facilities.

If a right-of-way is secured, boundary adjustments in the lease or unit shall automatically amend this right-of-way to include that portion of the facility no longer contained within the lease or unit. In the event of an automatic amendment to this right-of way grant, the prior on-lease/unit conditions of approval of this facility will not be affected even though they would now apply to facilities outside of the lease/unit as a result of a boundary adjustment. Rental fees, if appropriate shall be recalculated based on the conditions of this grant and the regulations in effect at the time of an automatic amendment.

If the well is productive, the access road will be rehabilitated or brought to Resource (Class III) Road standards within 60 days of dismantling the rig. If upgraded, the access road must be maintained at these standards until the well is properly abandoned. If this time frame cannot be met, the Area Manager will be notified so that temporary drainage control can be installed along the access road.

3. Location of Existing Wells - on a map, show the location of all water, injection, disposal, producing and drilling wells within a one mile radius of the proposed well, and describe the status of each: *See Exhibit "B"*

4. Location of Production Facilities:

a. On-site facilities: *See Exhibit "E"*

b. Off-site facilities: *None except for the buried power line and pipelines*

c. Pipelines: *Approximately 2,950' of pipeline corridor containing 2 (gas and water) 4" to 8" pipelines will be installed along the west side of the proposed road in the same trench as the power line.*

d. Power lines: *Approximately 2,950' of power line corridor containing one 3-phase power line will be installed along the west side of the proposed road in the same trench as the pipelines.*

All permanent (in place for six months or longer) structures constructed or installed (including oil well pump jacks) will be painted a flat, non-reflective color to match the standard environmental colors, as determined by the Rocky Mountain Five-State Interagency Committee. All facilities will be painted within six months of installation. Facilities required to

comply with Occupational Safety and Health Act (OSHA) may be excluded. Colors will be as follows: *slate grey*

All site security guidelines identified in 43 CFR 3163.7-5 and Onshore Oil and Gas Order No. 3 Colors will be as follows: *slate grey*

If a gas meter run is constructed, it will be located on lease within 500 feet of the wellhead. The gas flowline will be buried from the wellhead to the meter and will be buried downstream of the meter until it leaves the pad. Meter runs will be housed and/or fenced. The gas meter shall be calibrated prior to first sales and shall be calibrated quarterly thereafter. All gas production and measurement shall comply with the provisions of 43 CFR 3162. 7-3, Onshore Oil and Gas Order No. 5, and American Gas Association (AGA) Report No. 3.

If a tank battery is constructed on this lease, it will be surrounded by a dike of sufficient capacity to contain 1 ½ times the storage capacity of the largest tank. All loading lines and valves will be placed inside the berm surrounding the tank battery. All oil production and measurement shall conform to the provisions of 43 CFR 3162.7-3 and Onshore Oil and Gas Order No. 4.

Production facilities on location may include a lined or unlined produced water pit. If water is produced from the well, an application must be submitted.

5. Location and Type of Water Supply:

All water needed for drilling purposes will be obtained from (describe location and/or show on A map): *All water needed for drilling will be obtained from a local municipal water source, Since this well will be primarily drilled with air, minimal water will be needed.*

6. Source of Construction Material:

Pad construction material will be obtained from (if the source is Federally owned, show location on a map): *Private Owner in Wellington, Utah*

The use of materials under BLM jurisdiction will conform to 43 CFR 3610.2-3.

Any gravel used will be obtained from a state approved gravel pit.

7. Methods of Handling Waste Disposal:

Describe the methods and locations proposed for safe containment and disposal of waste material, e.g. cuttings, produced water, garbage, sewage, chemicals, etc.

The reserve pit will be located: *Inbound and along the north side of the pad.*

The reserve pit will be constructed so as not to leak, break, or allow discharge.

The reserve pit will be lined with native material unless designated otherwise by BLM officers prior to construction. Pit walls will be sloped no greater than 2 to 1.

The reserve pit shall be located in cut material, with at least 50% of the pit volume being below original ground level. Three sides of the reserve pit will be fenced before drilling starts. The fourth side will be fenced as soon as drilling is completed, and shall remain until the pit is dry. As soon as the reserve pit has dried, all areas not needed for production will be rehabilitated.

Trash must be contained in a trash cage and hauled away to an approved disposal site as necessary but no later than at the completion of drilling operations.

8. Ancillary Facilities: Garbage Containers and Portable Toilets

9. Well Site Layout - The pit, rig, cut and fill, topsoil, etc. on a plat with a scale of at least 1" = 50'.

All well, whether drilling, producing, suspended, or abandoned, will be identified in accordance with 43 CFR 3162.6.

Access to the well pad will be from: *east.*

The blooie line will be located: *At least 100 feet from the well head.*

To minimize the amount of fugitive dust and spray escaping from the blooie pit, the following blooie line deflection method will be employed: *Water Injection.*

10. Plans for Restoration of the Surface:

The top 6 inches of topsoil material will be removed from the location and stockpiled separately on: *Adjacent undisturbed land in a windrow fashion.*

Topsoil along the access road will be reserved in place adjacent to the road.

Immediately upon completion of drilling, all equipment that is not necessary for production shall be removed.

The reserve pit and that portion of the location not needed for production will be reclaimed.

Before any dirt work to restore the location takes place, the reserve pit must be completely dry.

Reclaimed roads will have the berms and cuts reduced and will be closed to vehicle use.

All disturbed areas will be re-contoured to replicate the natural slope.

The stockpiled topsoil will be evenly distributed over the disturbed area.

Prior to reseeding, all disturbed areas, including the access roads, will be scarified and left with a rough surface.

Seed will be broadcast or drilled between Sept. and Nov., or at a time specified by the BLM. If broadcast, a harrow or some other implement will be dragged over the seeded area to assure seed coverage.

The following seed mixture will be used: *BLM-recommended mixture.*

The abandonment marker will be one of the following, as specified by BLM:

1) at least four feet above ground level,
2) at restored ground level, or
3) below ground level.

In any case the marker shall be inscribed with the following: operator name, lease number, Well name and surveyed description (township, range, section and either quarter-quarter or footage.).

11. Surface and Mineral Ownership:

Surface Owner:	**Federal; Bureau of Land Management**
Surface Representative:	**Don Stephens can be reached at 435-636-3608.**
Mineral Ownership:	**Federal; Bureau of Land Management**

12. Other Information:

a. Archeological Concerns: *A Cultural Resource evaluation is pending from Senco-Phenix Archaeological Consultants and a report will be submitted, when prepared, to the BLM archaeologist.*

The operator is responsible for informing all persons in the area who are associated with this project that they will be subject to prosecution for knowingly disturbing historic or archaeological sites, or for collecting artifacts. If historic or archaeological materials are uncovered during construction, the operator is to immediately stop work That might further disturb such materials, and contact the authorized officer (AO). Within five (5) working days, the AO will inform the operator as to:

1. whether the materials appear eligible for the National Register of Historic Places;

2. the mitigation measures the operator will likely have to undertake before the site can be used (assuming in situ preservation is not necessary); and

3. a time frame for the AO to complete an expedited review under 36 CFR 800.11 to confirm, through the State Historic Preservation Officer, that the findings of the AO are correct and that mitigation is appropriate.

If the operator wishes, at any time, to relocate activities to avoid the expense of mitigation and/or the delays associated with this process, the AO will assume responsibility for whatever recordation and stabilization of the exposed materials may be required. Otherwise, the operator will be responsible for mitigation costs. The AO will provide technical and procedural guidelines for the conduct of mitigation. Upon verification from the AO that the required mitigation has been completed, the operator will then be allowed to resume construction.

b. Threatened and Endangered Species Concerns: *Prior to any surface disturbing activities an on-the-ground survey will be completed by Buys & Associates, Inc. in May 2004 with a report to be submitted to the BLM wildlife biologist.*

c. Wildlife Seasonal Restrictions (yes/no): *See Environmental Impact Statement (EIS)*

d. Off Location Geophysical Testing: *N/A*

e. Drainage crossings that require additional State or Federal approval: *None*

f. Other:

13. Lessee's or Operator's Representative and Certification

Representative: Whitney Marvin – Landman, President and Chairman

Name: WhitMar Exploration Company

Address: 1021 Main Street, Suite 1100, Houston, Texas 77002

Phone No: (713) 739-7300 office
(713) 739-7333 fax

Certification:

I hereby certify that I, or persons under my direct supervision, have inspected the proposed drill site and access route; that I am familiar with the conditions which currently exists; that the statements made in this APD package are, to the best of my knowledge, true and correct; and that the work associated with the operations proposed herein will be performed by Whitmar and its contractors and subcontractors in conformity with this APD package and the terms and conditions under which it is approved. I also certify responsibility for the operations conducted on that portion of the leased lands associated with this application, with bond coverage being provided under WhitMar's pending BLM bond. This statement is subject to the provisions of 18 U.S.C. 1001 for the filing of a false statement.

Signature: _____ Date: 4/26/04

C. REQUIRED APPROVALS, REPORTS AND NOTIFICATIONS

Required verbal notifications are summarized in Table 1, attached.

Building Location - Contact the Resource Area, Natural Resource Protection Specialist at least 24 hours prior to commencing construction of location.

Spud - The spud date will be reported to the Resource Area Office 24 hours prior to spudding. Written notification in the form of a Sundry Notice (Form 3160-5) will be submitted the District Office within 24 hours after spudding, regardless of whether spud was made with a dry hold digger or big rig.

Daily Drilling Reports - Daily drilling reports shall detail the progress and status of the well and shall be submitted to the District Office on a weekly basis.

Monthly Reports of Operations - In accordance with Onshore Oil and Gas Order No. 1, this well shall be reported on Minerals Management Service (MMS) Form 3160, "Monthly Report of Operations," starting the month in which operations commence and continuing each month until the well is physically plugged and abandoned. This report will be filed directly with MMS.

Sundry Notices - There will be no deviation from the proposed drilling and/or workover program without prior approval from the Assistant District Manager. "Sundry Notices and Reports on Wells: (Form 3160-5) will be filed for approval for all changes of plans and other operations in accordance with 43 CFR 3162.3-2. Safe drilling and operating practices must be observed.

Drilling suspensions - Operations authorized by this permit shall not be suspended for more than 30 days without prior approval of the Authorized Officer. All conditions of this approval shall be applicable during any operations conducted with a replacement rig.

Undesirable Events - Spills, blowouts, fires, leaks, accidents, or any other unusual occurrences shall be immediately reported to the Resource Area in accordance with requirements of NTLA.

Cultural Resources - If cultural resources are discovered during construction, work that might disturb the resources is to stop, and the Area Manager is to be notified.

First production - Should the well be successfully completed for production, the Assistant District Manager, Minerals Division will be notified when the well is placed in producing status. Such notification may be made by phone, but must be followed by a sundry notice or letter not later than five (5) business days following the date on which the well is placed into production.

A first production conference will be scheduled as soon as the productivity of the well is apparent. This conference should be coordinated through the Resource Area Office. The Resource Area Office shall be notified prior to the first sale.

Well Completion Report - Whether the well is completed as a dry hole or as a producer, "Well Completion and Re-completion Report and Log" (Form 3160-4) will be submitted to the District Office not later than thirty (30) days after completion of the well or after completion operations being performed, in accordance with 43 CFR 3162.4-1. Two copies of all logs, core descriptions, core analysis, well test data, geologic summaries, sample description, and all other surveys or data obtained and compiled during the drilling, workover, and/or completion operations, will be filed with Form 3160-4. Samples (cuttings and/or samples) will be submitted when requested by the Assistant District Manager.

Venting/Flaring of Gas - NTL-4A allows venting/flaring of gas during the initial well evaluation period not to exceed 30 days or 50 Mmcf. Venting/flaring beyond the initial test period threshold must be approved by the District Office.

Produced Water - Produced waste water may be confined to an unlined pit for a period not to exceed 90 days after initial production. During the 90 day period, an application for approval of a permanent disposal method and location, along with the required water analysis, will be submitted to the Assistant District Manager for approval.

Off-Lease Measurement, Storage, Commingling - Prior approval must be obtained from the Assistant District Manager for off-lease measurement, off-lease storage and/or commingling (either down-hole or at the surface).

Plugging and Abandonment - If the well is completed as a dry hole, plugging instructions must be obtained from the BLM, Moab District Office prior to initiating plugging operations. Table 1 of this document provides the after-hours phone numbers of personnel who are authorized to give plugging instructions.

A "Subsequent Report of Abandonment" (Form 3160-5) will be filed with the Assistant District Manager, Minerals Divisions within thirty (30) days following completion of the well for abandonment. This report will indicate where plugs were placed and the current status of surface restoration. Upon completion of approved plugging, a regulation marker will be erected in accordance with 43 CFR 3162.6. Final abandonment will not be approved until the surface reclamation work required by the approved APD or approved abandonment notice has been completed to the satisfaction of the Area Manager or his representative, or the appropriate surface managing agency.

TABLE 1
NOTIFICATIONS

Notify Don Stephens of the Price Resource Area, at (435) 636-3608 for the following:

2 days prior to commencement of dirt work construction or reclamation;

1 day prior to spudding

50 feet prior to reaching surface and intermediate casing depths;

3 hours prior to testing BOPE;

12 hours prior to reaching kickoff point depth (if applicable).

If the person at the above number cannot be reached, notify the Moab District Office at (435) 259-6111. If unsuccessful, notify one of the people listed below.

Well abandonment operations require 24 hour advance notice and prior approval. In the case of newly drilled dry holes, verbal approval can be obtained by calling the Moab District Office, Branch of Fluid Minerals at (435) 259-6111. If approval is needed after work hours, you may contact the following:

Eric Jones, Petroleum Engineer	Office: (435) 259-6111 Home: (435) 259-2214

ELEVATION OF UNGRADED GROUND AT LOCATION STAKE = 5756.4'
ELAVATION OF GRADED GROUND AT LOCATION STAKE = 5755.9'

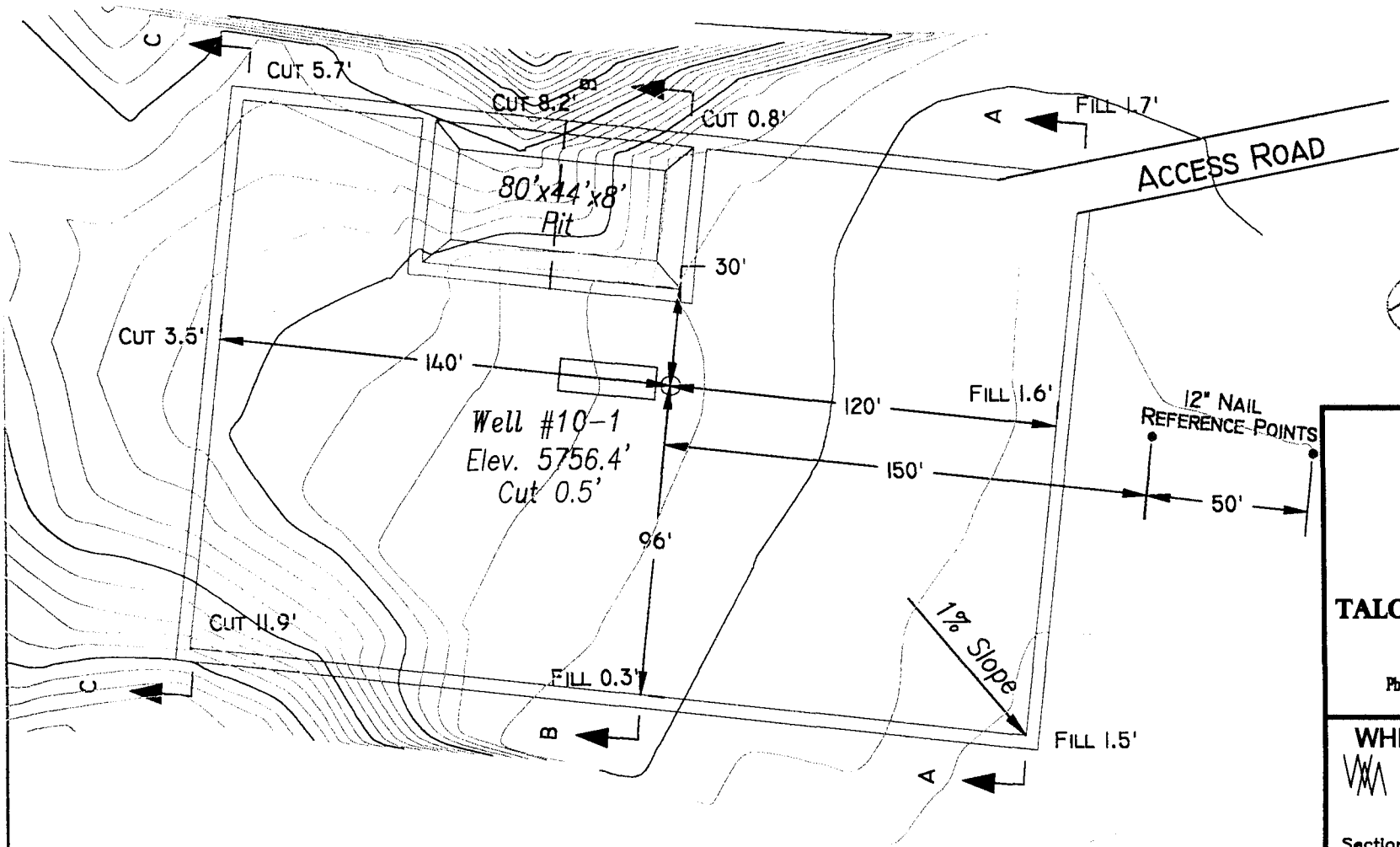

TALON RESOURCES, INC.
195 North 100 West P.O. Box 1230
Huntington, Utah 84528
Phone (435)687-5310 Fax (435)687-5311
E-Mail talonsetv.net

WHITMAR EXPLORATION COMPANY

LOCATION LAYOUT
Section 10, T14S, R11E, S.L.B.&M.
WELL #10-1

Drawn By: J. STANSFIELD	Checked By: L.W.J.
Drawing No. A-2	Date: 04/20/04
	Scale: 1" = 50'
Sheet 2 of 4	Job No. 1278

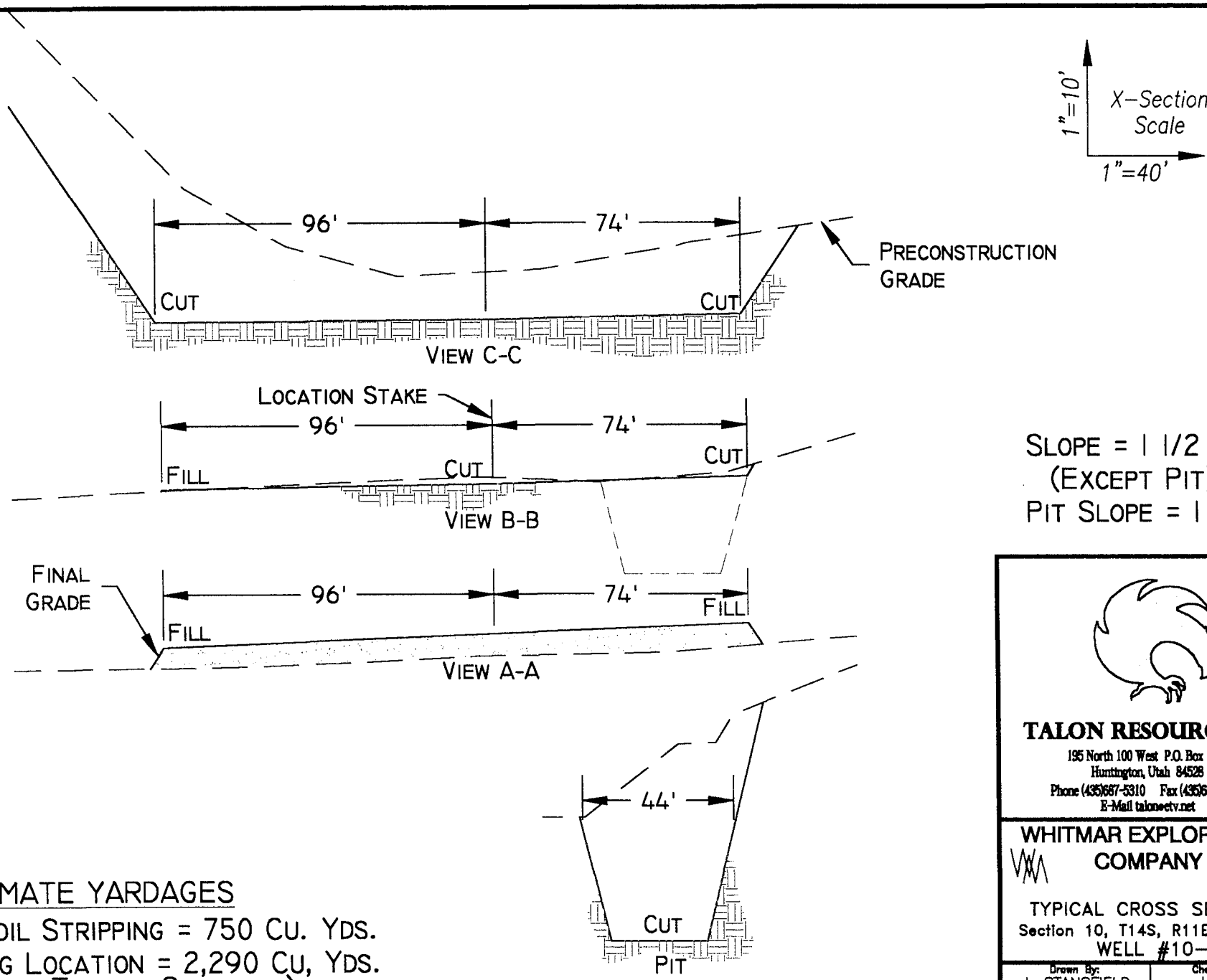

SLOPE = 1 1/2 : 1
(EXCEPT PIT)
PIT SLOPE = 1 ; 1

APPROXIMATE YARDAGES

(6")TOPSOIL STRIPPING = 750 CU. YDS.
REMAINING LOCATION = 2,290 CU, YDS.
(INCLUDING TOPSOIL STRIPPING)

TOTAL CUT (INCLUDING PIT)= 3,770 CU. YDS.
TOTAL FILL = 670 CU. YDS.

TALON RESOURCES, INC
195 North 100 West P.O. Box 1230
Huntington, Utah 84528
Phone (435)687-5310 Fax (435)687-5311
E-Mail talonectv.net

WHITMAR EXPLORATION COMPANY

TYPICAL CROSS SECTION
Section 10, T14S, R11E, S.L.B.&M.
WELL #10-1

Drawn By: J. STANSFIELD	Checked By: L.W.J.
Drawing No. C-1	Date: 04/20/04
	Scale: 1" = 40'
Sheet 3 of 4	Job No. 1278

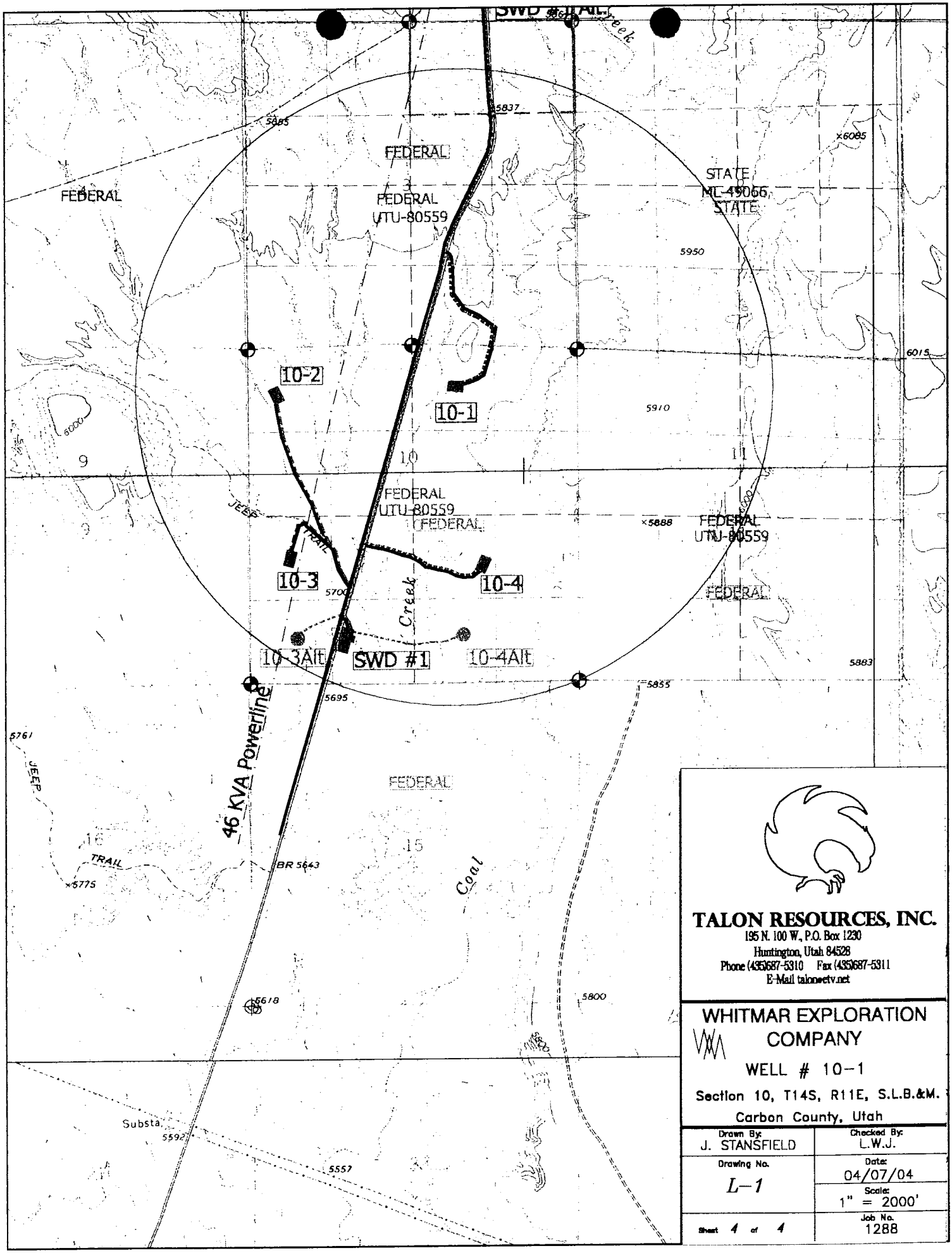

TALON RESOURCES, INC.
195 N. 100 W., P.O. Box 1230
Huntington, Utah 84528
Phone (435)687-5310 Fax (435)687-5311
E-Mail talon@etv.net

WHITMAR EXPLORATION COMPANY

WELL # 10-1

Section 10, T14S, R11E, S.L.B.&M.

Carbon County, Utah

Drawn By: J. STANSFIELD	Checked By: L.W.J.
Drawing No. L-1	Date: 04/07/04
	Scale: 1" = 2000'
Sheet 4 of 4	Job No. 1288

WhitMar Exploration Company

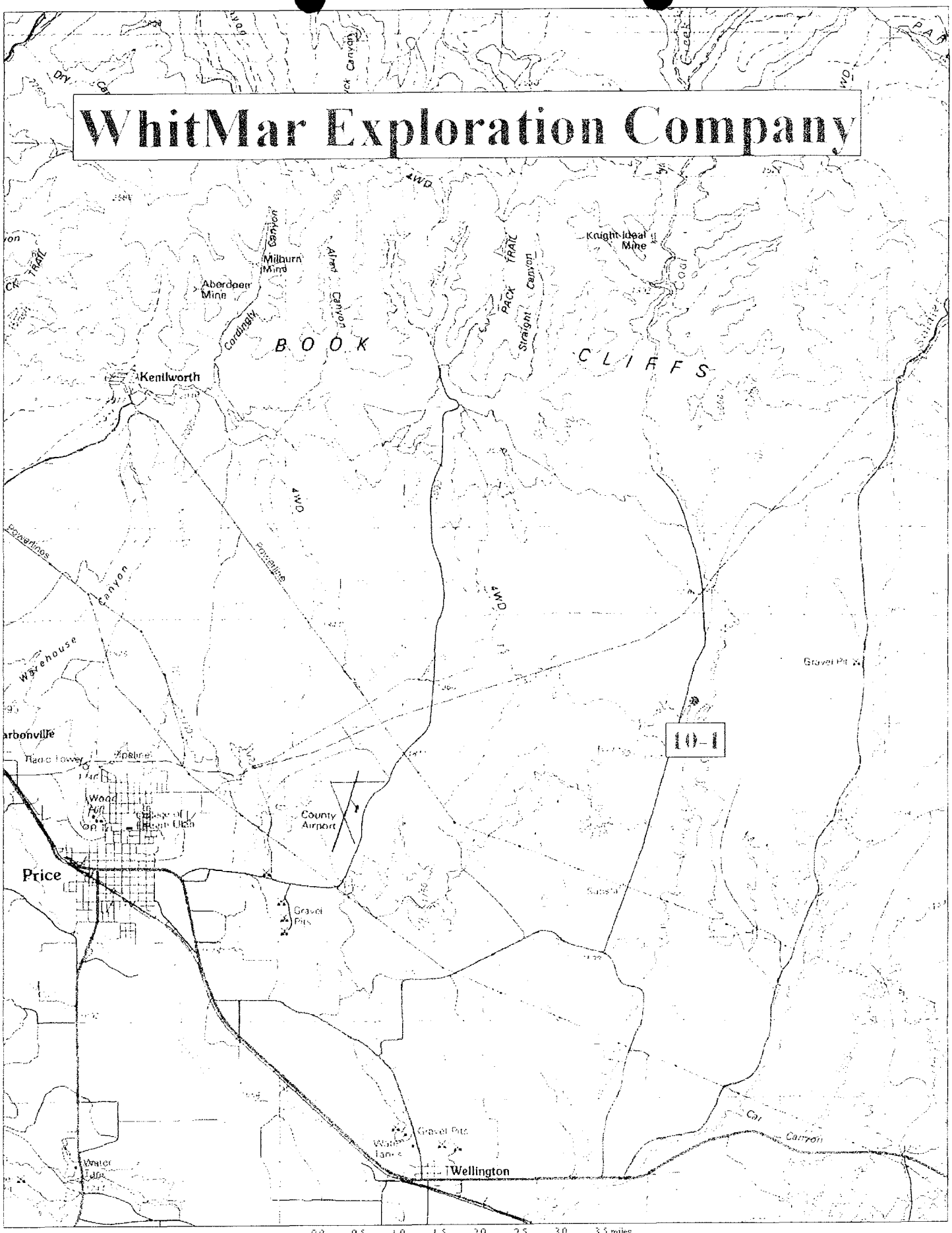

TN ↑ /MN
12½°

0.0 0.5 1.0 1.5 2.0 2.5 3.0 3.5 miles
0 1 2 3 4 5 km

Printed from TOPO! ©2000 National Geographic Holdings (www.topo.com)

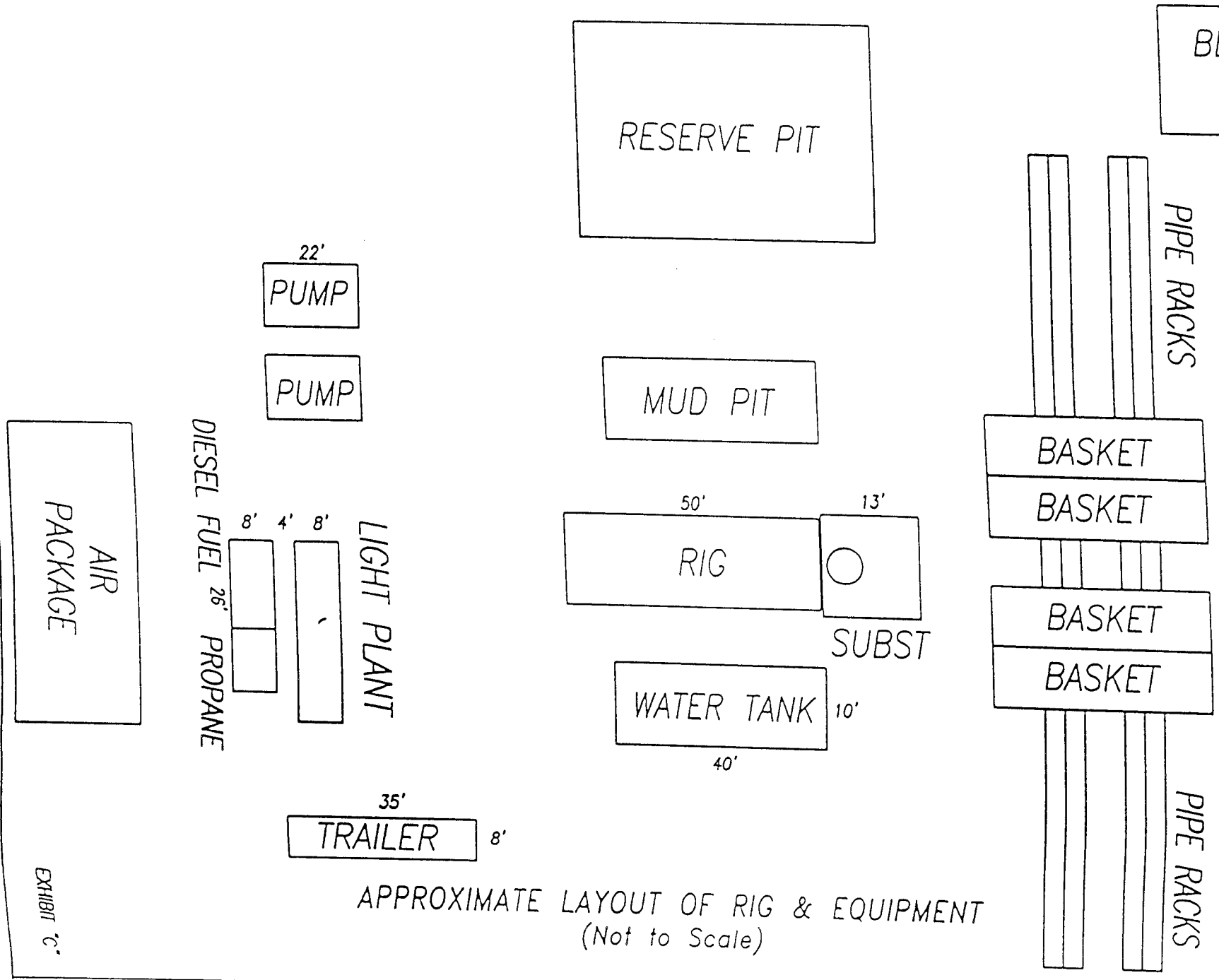

APPROXIMATE LAYOUT OF RIG & EQUIPMENT
(Not to Scale)

EXHIBIT "C"

TYPICAL ROAD CROSS-SECTION

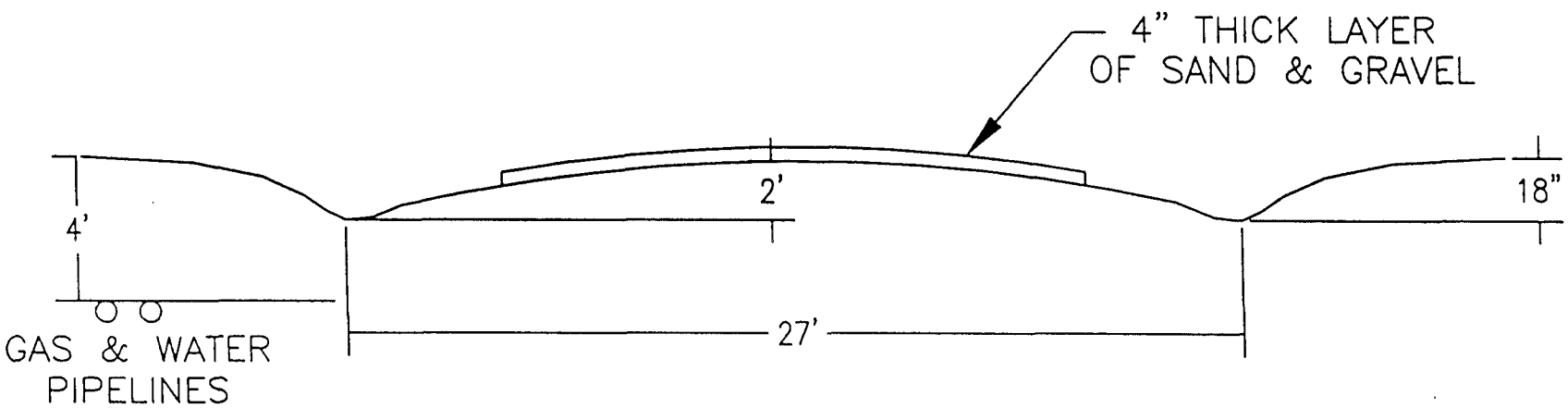

EXHIBIT "F"

BOP Equipment

2000 psi WP

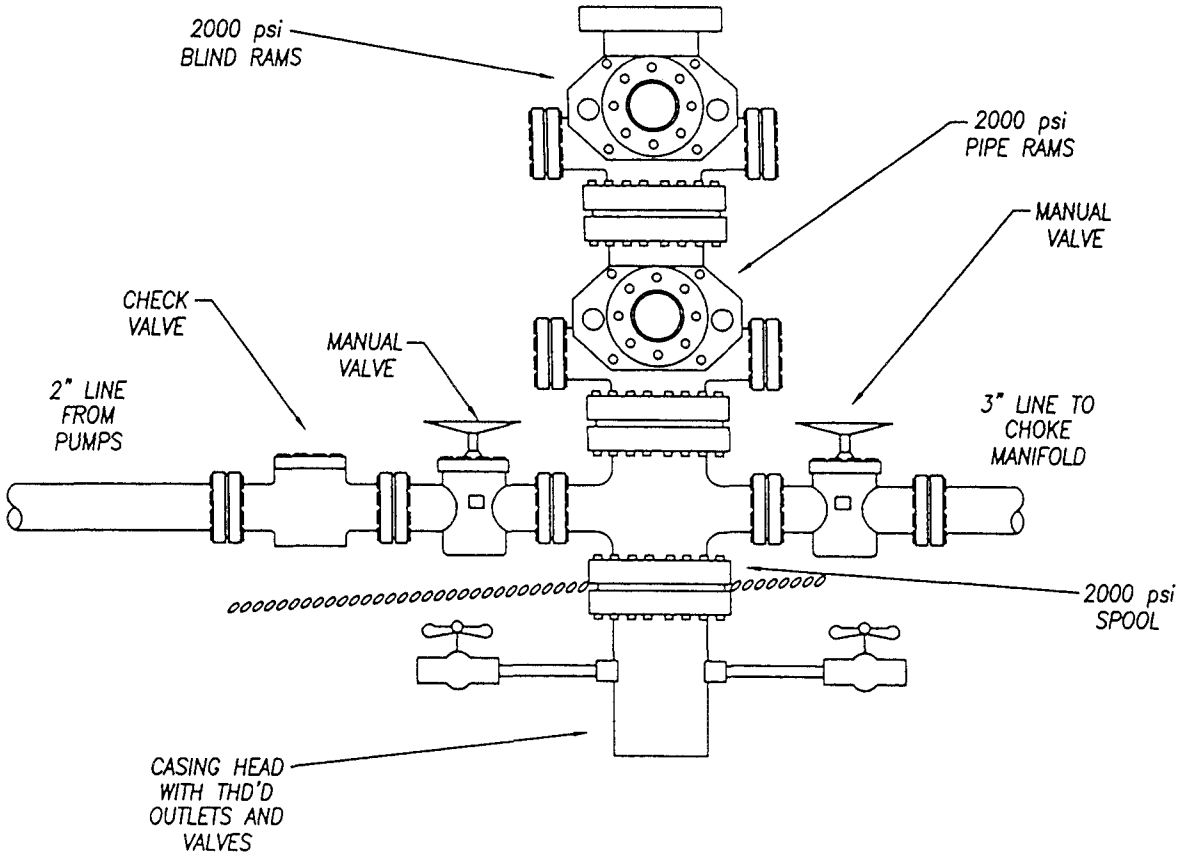

EXHIBIT "C"

CHOKE MANIFOLD

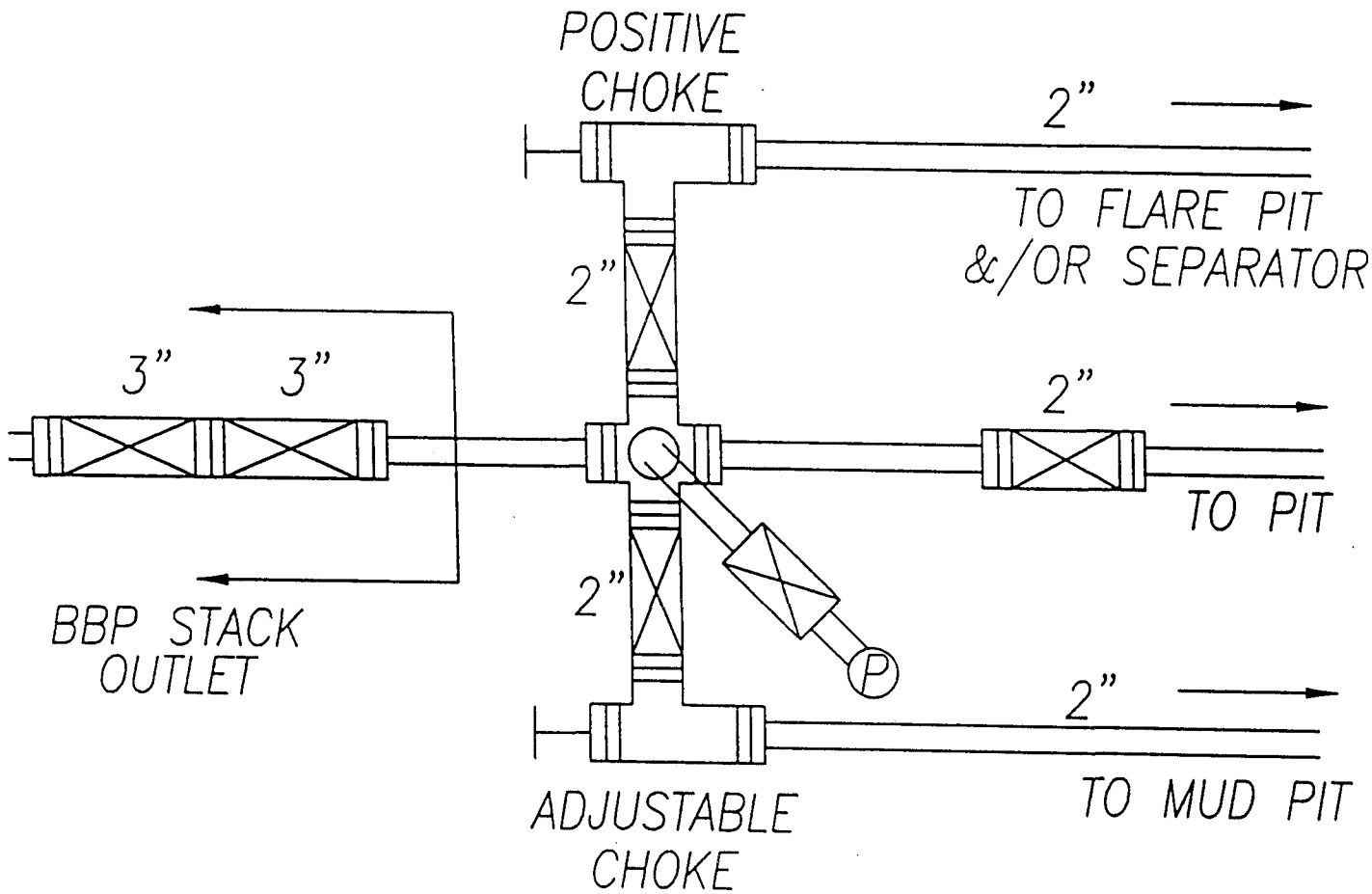

EXHIBIT "H"

003

WORKSHEET
APPLICATION FOR PERMIT TO DRILL

APD RECEIVED: 04/29/2004

API NO. ASSIGNED: 43-007-30959

WELL NAME: 10-1

OPERATOR: WHITMAR EXPLORATION (N2585)

CONTACT: LARRY JOHNSON

PHONE NUMBER: 713-739-7300

PROPOSED LOCATION:

NWNE 10 140S 110E

SURFACE: 0610 FNL 1835 FEL

BOTTOM: 0610 FNL 1835 FEL

CARBON

WILDCAT (1)

LEASE TYPE: 1 - Federal

LEASE NUMBER: UTU-80559

SURFACE OWNER: 1 - Federal

PROPOSED FORMATION: FRSD

COALBED METHANE WELL? NO

INSPECT LOCATN BY: / /

Tech Review	Initials	Date
Engineering		
Geology		
Surface		

LATITUDE: 39.62887

LONGITUDE: 110.67011

RECEIVED AND/OR REVIEWED:

✓ Plat

✓ Bond: Fed[1] Ind[] Sta[] Fee[]
(No. 104195928)

N Potash (Y/N)

N Oil Shale 190-5 (B) or 190-3 or 190-13

✓ Water Permit
(No. MUNICIPAL)

N RDCC Review (Y/N)
(Date:)

N/A Fee Surf Agreement (Y/N)

LOCATION AND SITING:

____ R649-2-3.

Unit ____

✓ R649-3-2. General
Siting: 460 From Qtr/Qtr & 920' Between Wells

____ R649-3-3. Exception

____ Drilling Unit
Board Cause No: ____
Eff Date: ____
Siting: ____

____ R649-3-11. Directional Drill

COMMENTS: ____

STIPULATIONS: 1- Federal approval
2- Spacing Stip

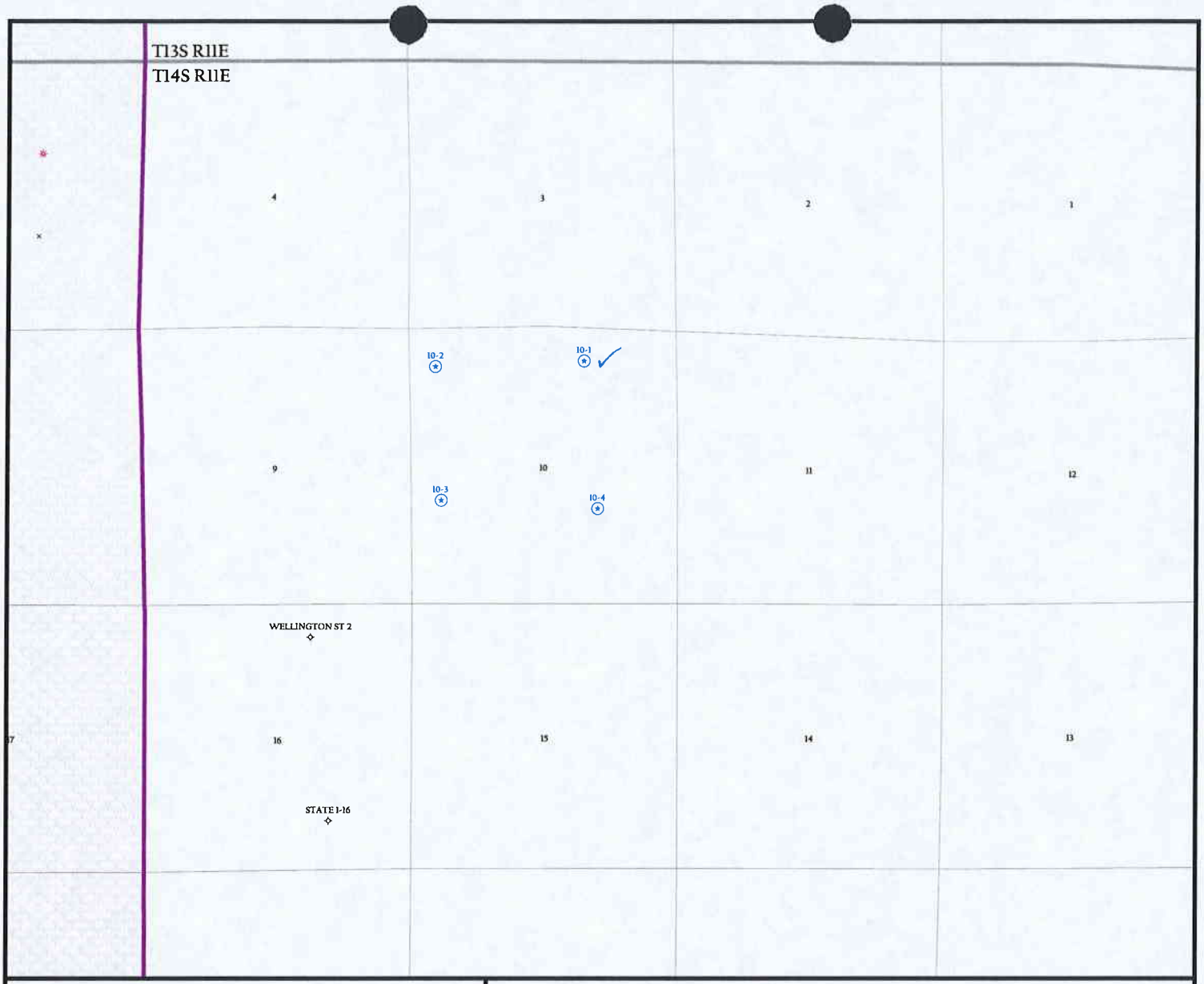

OPERATOR: WHITMAR EXPL CO (N2585)

SEC. 10 T.14S, R.11E

FIELD: WILDCAT (001)

COUNTY: CARBON

SPACING: R649-3-2 / GENERAL SITING

Utah Oil Gas and Mining

Well Status

- GAS INJECTION
- GAS STORAGE
- LOCATION ABANDONED
- NEW LOCATION
- PLUGGED & ABANDONED
- PRODUCING GAS
- PRODUCING OIL
- SHUT-IN GAS
- SHUT-IN OIL
- TEMP. ABANDONED
- TEST WELL
- WATER INJECTION
- WATER SUPPLY
- WATER DISPOSAL

Unit Status

- EXPLORATORY
- GAS STORAGE
- NF PP OIL
- NF SECONDARY
- PENDING
- PI OIL
- PP GAS
- PP GEOTHERML
- PP OIL
- SECONDARY
- TERMINATED

Field Status

- ABANDONED
- ACTIVE
- COMBINED
- INACTIVE
- PROPOSED
- STORAGE
- TERMINATED

N
W E
S

PREPARED BY: DIANA WHITNEY
DATE: 4-MAY-2004

004

State of Utah

Department of Natural Resources

ROBERT L. MORGAN
Executive Director

Division of Oil, Gas & Mining

LOWELL P. BRAXTON
Division Director

OLENE S. WALKER
Governor

GAYLE F. McKEACHNIE
Lieutenant Governor

June 24, 2004

Whitmar Exploration Company
1021 Main Street, Suite 1100
Houston, TX 77002

Re: 10-1 Well, 610' FNL, 1835' FEL, NW NE, Sec. 10, T. 14 South, R. 11 East, Carbon County, Utah

Gentlemen:

Pursuant to the provisions and requirements of Utah Code Ann.§ 40-6-1 *et seq.*, Utah Administrative Code R649-3-1 *et seq.*, and the attached Conditions of Approval, approval to drill the referenced well is granted.

This approval shall expire one year from the above date unless substantial and continuous operation is underway, or a request for extension is made prior to the expiration date. The API identification number assigned to this well is 43-007-30959.

Sincerely,

John R. Baza
Associate Director

pab
Enclosures

cc: Carbon County Assessor
Bureau of Land Management, Moab District Office

Operator: Whitmar Exploration Company
Well Name & Number 10-1
API Number: 43-007-30959
Lease: UTU-80559

Location: NW NE **Sec.** 10 **T.** 14 South **R.** 11 East

Conditions of Approval

1. General
   Compliance with the requirements of Utah Admin. R. 649-1 *et seq.*, the Oil and Gas Conservation General Rules, and the applicable terms and provisions of the approved Application for permit to drill.

2. Notification Requirements
   Notify the Division within 24 hours of spudding the well.
   - Contact Carol Daniels at (801) 538-5284.

   Notify the Division prior to commencing operations to plug and abandon the well.
   - Contact Dan Jarvis at (801) 538-5338

3. Reporting Requirements
   All required reports, forms and submittals will be promptly filed with the Division, including but not limited to the Entity Action Form (Form 6), Report of Water Encountered During Drilling (Form 7), Weekly Progress Reports for drilling and completion operations, and Sundry Notices and Reports on Wells requesting approval of change of plans or other operational actions.

4. State approval of this well does not supersede the required federal approval, which must be obtained prior to drilling.

5. This proposed well is located in an area for which drilling units (well spacing patterns) have not been established through an order of the Board of Oil, Gas and Mining (the "Board"). In order to avoid the possibility of waste or injury to correlative rights, the operator is requested, once the well has been drilled, completed, and has produced, to analyze geological and engineering data generated therefrom, as well as any similar data from surrounding areas if available. As soon as is practicable after completion of its analysis, and if the analysis suggests an area larger than the quarter-quarter section upon which the well is located is being drained, the operator is requested to seek an appropriate order from the Board establishing drilling and spacing units in conformance with such analysis by filing a Request for Agency Action with the Board.

STATE OF UTAH
DEPARTMENT OF NATURAL RESOURCES
DIVISION OF OIL, GAS AND MINING

FORM 9

SUNDRY NOTICES AND REPORTS ON WELLS

Do not use this form for proposals to drill new wells, significantly deepen existing wells below current bottom-hole depth, reenter plugged wells, or to drill horizontal laterals. Use APPLICATION FOR PERMIT TO DRILL form for such proposals.

5. LEASE DESIGNATION AND SERIAL NUMBER: UTU-80559
6. IF INDIAN, ALLOTTEE OR TRIBE NAME: N/A
7. UNIT or CA AGREEMENT NAME: N/A
8. WELL NAME and NUMBER: 10-1
9. API NUMBER: 4300730959
10. FIELD AND POOL, OR WILDCAT: undesignated

1. TYPE OF WELL: OIL WELL ☐ GAS WELL ☑ OTHER _____

CONFIDENTIAL

2. NAME OF OPERATOR: WhitMar Exploration Company

3. ADDRESS OF OPERATOR: 1021 Main Street, 1100 CITY Houston STATE TX ZIP 77002 PHONE NUMBER: (713) 739-7300

4. LOCATION OF WELL

FOOTAGES AT SURFACE: 610' FNL, 1,835' FEL COUNTY: Carbon

QTR/QTR, SECTION, TOWNSHIP, RANGE, MERIDIAN: NWNE 10 14S 11E S STATE: UTAH

11. CHECK APPROPRIATE BOXES TO INDICATE NATURE OF NOTICE, REPORT, OR OTHER DATA

TYPE OF SUBMISSION	TYPE OF ACTION		
☐ NOTICE OF INTENT (Submit In Duplicate)	☐ ACIDIZE	☐ DEEPEN	☐ REPERFORATE CURRENT FORMATION
Approximate date work will start: _____	☐ ALTER CASING	☐ FRACTURE TREAT	☐ SIDETRACK TO REPAIR WELL
	☐ CASING REPAIR	☐ NEW CONSTRUCTION	☐ TEMPORARILY ABANDON
	☐ CHANGE TO PREVIOUS PLANS	☐ OPERATOR CHANGE	☐ TUBING REPAIR
	☐ CHANGE TUBING	☐ PLUG AND ABANDON	☐ VENT OR FLARE
☑ SUBSEQUENT REPORT (Submit Original Form Only)	☐ CHANGE WELL NAME	☐ PLUG BACK	☐ WATER DISPOSAL
Date of work completion:	☐ CHANGE WELL STATUS	☐ PRODUCTION (START/RESUME)	☐ WATER SHUT-OFF
	☐ COMMINGLE PRODUCING FORMATIONS	☐ RECLAMATION OF WELL SITE	☐ OTHER: Extend State Permit
_____	☐ CONVERT WELL TYPE	☐ RECOMPLETE - DIFFERENT FORMATION	

12. DESCRIBE PROPOSED OR COMPLETED OPERATIONS. Clearly show all pertinent details including dates, depths, volumes, etc.

WhitMar Exploration Company hereby requests a one year extension of the state permit for the 10-1

This is the first extension that has been requested.

Approved by the Utah Division of Oil, Gas and Mining
Date: 8-25-05
By: [signature]

COPY SENT TO OPERATOR
Date: 8-30-05
Initials: CHD

NAME (PLEASE PRINT) Don Hamilton TITLE Agent for WhitMar Exploration Company

SIGNATURE Don Hamilton DATE 8/15/2005

(This space for State use only)

RECEIVED
AUG 18 2005
DIV. OF OIL, GAS & MINING

ORIGINAL

(5/2000) (See Instructions on Reverse Side)

Application for Permit to Drill
Request for Permit Extension
Validation
(this form should accompany the Sundry Notice requesting permit extension)

API: 43-007-30959
Well Name: 10-1
Location: NW/4 NE/4, Section 10, T14S, R11E, SLB&M
Company Permit Issued to: WhitMar Exploration Company
Date Original Permit Issued:

The undersigned as owner with legal rights to drill on the property as permitted above, hereby verifies that the information as submitted in the previously approved application to drill, remains valid and does not require revision.

Following is a checklist of some items related to the application, which should be verified.

If located on private land, has the ownership changed, if so, has the surface agreement been updated? Yes☐ No☑

Have any wells been drilled in the vicinity of the proposed well which would affect the spacing or siting requirements for this location? Yes☐ No☑

Has there been any unit or other agreements put in place that could affect the permitting or operation of this proposed well? Yes☐ No☑

Have there been any changes to the access route including ownership, or right-of-way, which could affect the proposed location? Yes☐ No☑

Has the approved source of water for drilling changed? Yes☐ No☑

Have there been any physical changes to the surface location or access route which will require a change in plans from what was discussed at the onsite evaluation? Yes☐ No☑

Is bonding still in place, which covers this proposed well? Yes☑ No☐

Don Hamilton
Signature

8/15/2005
Date

Title: Agent

Representing: WhitMar Exploration Company

RECEIVED
AUG 18 2005
DIV. OF OIL, GAS & MINING

ORIGINAL

JON M. HUNTSMAN, JR.
Governor

GARY R. HERBERT
Lieutenant Governor

State of Utah

DEPARTMENT OF NATURAL RESOURCES

MICHAEL R. STYLER
Executive Director

Division of Oil, Gas and Mining

JOHN R. BAZA
Division Director

June 7, 2007

Whitmar Exploration Company
1021 Main Street, Suite 1100
Houston, TX 77002

Re: APD Rescinded –10-1 Sec. 10, T. 14S R. 11E
Carbon County, Utah API No. 43-007-30959

Gentlemen:

The Application for Permit to Drill (APD) for the subject well was approved by the Division of Oil, Gas and Mining (Division) on June 24, 2004. On August 25, 2005 and April 13, 2006 the Division granted a one-year APD extension.

No drilling activity at this location has been reported to the division. Therefore, approval to drill the well is hereby rescinded, effective June 7, 2007.

A new APD must be filed with this office for approval prior to the commencement of any future work on the subject location.

If any previously unreported operations have been performed on this well location, it is imperative that you notify the Division immediately.

Sincerely,

Diana Mason
Environmental Scientist

cc: Well File
Bureau of Land Management, Moab

1594 West North Temple, Suite 1210, PO Box 145801, Salt Lake City, UT 84114-5801
telephone (801) 538-5340 • facsimile (801) 359-3940 • TTY (801) 538-7458 • *www.ogm.utah.gov*

UTAH DNR OIL, GAS & MINING