PHILLIPS PETROLEUM COMPANY
6825 South 5300 West
P.O. Box 851
Price, UT 84501
TEL: (435) 613-9777 FAX: (435) 613-9782

July 5, 2001

Ms Lisha Cordova
State of Utah
Division of Oil, Gas and Mining
1594 West North Temple, Suite 1210
SLC, Utah 84114-5801

RE: Application for Permit to Drill-
Seely 15-499, SE/4 SW/4 Sec.15
T14S, R08E, SLB & M, Carbon County, Utah

Dear Ms. Cordova:

Enclosed is the original of the *Application for Permit to Drill* (APD). Included with the APD is the following information:

Exhibit "A"- Survey Plat of the Proposed Well Site;

Exhibit "B" - Proposed Location Map with Pipeline, Power, and Road Access;

Exhibit "C" - Drilling Site Layout;

Exhibit "D" - Drilling Information

Exhibit "E" - Multipoint Surface Use Plan

Exhibit "F" - Typical Road Cross-section;

Exhibit "G" - BOP Diagram;

Exhibit "H" - Typical Wellhead Manifold;

Exhibit "I" - Evidence of Bond;

ORIGINAL

CONFIDENTIAL

RECEIVED
JUL 09 2001
DIVISION OF
OIL, GAS AND MINING

This proposed well is located more than 460' from the boundary of the Unit Area and from the boundary of any uncommitted tract within the Unit Area and will not require the administrative approval in accordance with Utah Administrative Code Rule R649-3-3.

Please accept this letter as Phillips Petroleum Company's written request for confidential treatment of all information contained in and pertaining to this permit application, if said information is eligible for such consideration.

Thank you very much for your timely consideration of this application. Please feel free to contact me if you have any questions.

Sincerely,

Jean Semborski

Jean Semborski
Permitting Specialist

cc: Mr. Eric Jones, BLM, Moab, Utah
Mr. Chuck Snure, Texaco
Mr. Robin Adams, Dominion Resources
Mr. Don Stephens, BLM, Price, Utah
Ms. Jeanette Borges , Phillips Petroleum Company
Mr. Dave Levanger, Carbon County Planning and Zoning
PPCo Well File

FORM 3

STATE OF UTAH

DIVISION OF OIL, GAS AND MINING

APPLICATION FOR PERMIT TO DRILL OR DEEPEN

5. Lease Designation and Serial Number: Private

6. If Indian, Allottee or Tribe Name: N/A

7. Unit Agreement Name: Drunkards Wash UTU-67921X

8. Farm or Lease Name: Seely

9. Well Number: 15-499

10. Field or Pool, or Wildcat: ~~Drunkards Wash~~ Undesignated

11. Qtr/Qtr, Section, Township, Range, Meridian: SE/4 SW/4 Section 15, T14S, R08E, SLB&M

1A. Type of Work: DRILL [X] DEEPEN [ ]

B. Type of Well: OIL [ ] GAS [X] OTHER: SINGLE ZONE [ ] MULTIPLE ZONE [ ]

2. Name of Operator: Phillips Petroleum Company

3. Address and Telephone Number: 6825 S. 5300 W. P.O. Box 851 Price, Utah 84501 (435) 613-9777

4. Location of Well (Footages)
At Surface: 496' FSL, 2196' FWL
At Proposed Producing Zone:

4383410 N
498789 E

14. Distance in miles and direction from nearest town or post office: 10.9 Miles west of Price, Utah

12. County: Carbon

13. State: UTAH

15. Distance to nearest property or lease line (feet): 2150'

16. Number of acres in lease: 1320

17. Number of acres assigned to this well: 160 acres

18. Distance to nearest well, drilling, completed, or applied for, on this lease (feet): 2000'

19. Proposed Depth: 3880'

20. Rotary or cable tools: Rotary

21. Elevations (show whether DF, RT, GR, etc.): 7029' GR

22. Approximate date work will start: September 2001

23. **PROPOSED CASING AND CEMENTING PROGRAM**

SIZE OF HOLE	GRADE, SIZE OF CASING	WEIGHT PER FOOT	SETTING DEPTH	QUANTITY OF CEMENT
14"	12 3/4"	Conductor	40'	
11"	J-55 8 5/8"	24#/ft	388'	150sks G+2%CaCl+1/4#/sk flocel
7 7/8"	N-80 5 1/2"	17#/ft	3870'	342sks50/50poz8%gel+2%CaCl+10%extender
				105 sks "G" thixtropic

DESCRIBE PROPOSED PROGRAM: If proposal is to deepen, give data on present productive zone and proposed new productive zone. If proposal is to drill or deepen directionally, give pertinent data on subsurface locations and measured and true vertical depths. Give blowout preventer program, if any.

ORIGINAL

CONFIDENTIAL

24.

Name & Signature: Jean Semborski *Jean Semborski* Title: Permitting Analyst Date: 7/5/01

(This space for state use only)

API Number Assigned: 43-007-30798

Approval:

Approved by the Utah Division of Oil, Gas and Mining

Date: 08-23-01

By:

(See Instructions on Reverse Side)

RECEIVED

JUL 09 2001

DIVISION OF OIL, GAS AND MINING

(1/93)

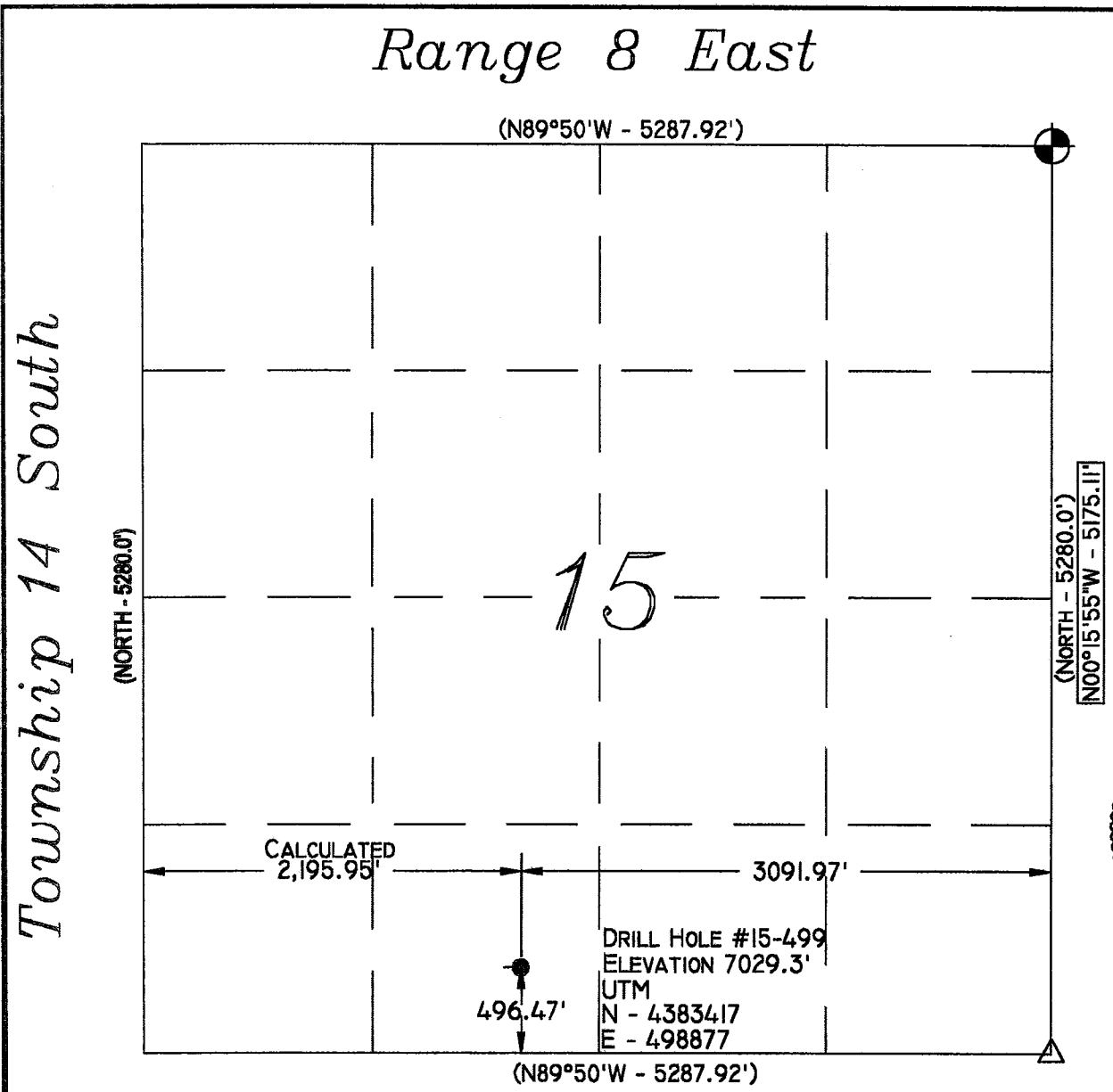

Legend

- Drill Hole Location
- Brass Cap (Found)
- Brass Cap (Searched for, but not found)
- Calculated Corner
- ( ) GLO
- GPS Measured

NOTES:
1. UTM AND LATITUDE / LONGITUDE COORDINATES ARE DERIVED USING A GPS PATHFINDER AND ARE SHOWN IN NAD 27 DATUM.

LAT / LONG
39°36'09"N
111°00'47"W

Location:
THE WELL LOCATION WAS DETERMINED USING A TRIMBLE 4700 GPS SURVEY GRADE UNIT.

Basis of Bearing:
THE BASIS OF BEARING IS GPS MEASURED.

GLO Bearing:
THE BEARINGS INDICATED ARE PER THE RECORDED PLAT OBTAINED FROM THE U.S. LAND OFFICE.

Basis of Elevation:
BASIS OF ELEVATION OF 6994' BEING AT THE SOUTHEAST SECTION CORNER OF SECTION 14, TOWNSHIP 14 SOUTH, RANGE 8 EAST, SALT LAKE BASE AND MERIDIAN, AS SHOWN ON THE PINNACLE PEAK QUADRANGLE 7.5 MINUTE SERIES MAP.

Description of Location:
PROPOSED DRILL HOLE LOCATED IN THE SE1/4, SW1/4 OF SECTION 15, T14S, R8E, S.L.B.&M., BEING 496.47' NORTH AND 3091.97' WEST FROM THE SOUTHEAST SECTION CORNER OF SECTION 15, T14S, R8E, SALT LAKE BASE & MERIDIAN.

Surveyor's Certificate:

I, Albert J. Spensko, a Registered Professional Land Surveyor, holding Certificate 146652 State of Utah, do hereby certify that the information on this drawing is a true and accurate survey based on data of record and was conducted under my personal direction and supervision as shown hereon.

REGISTERED LAND SURVEYOR
6-28-01
No. 146652
Albert J. Spensko
STATE OF UTAH

GRAPHIC SCALE
0 500' 1000'
(IN FEET)
1 inch = 1000 ft.

Talon Resources, Inc.
375 South Carbon Avenue, Suite 101
Price, Utah 84501
Ph: 435-637-8781
Fax: 435-636-8603

PHILLIPS PETROLEUM
WELL #15-499
Section 15, T14S, R8E, S.L.B.&M.
Carbon County, Utah

Drawn By: J. STANSFIELD	Checked By: L.W.J./A.J.S.
Drawing No. A-1	Date: 06/27/01
	Scale: 1" = 1000'
Sheet 1 of 4	Job No. 374

Exhibit "A" 1 of 3

ELEVATION OF UNGRADED GROUND AT LOCATION STAKE = 7029.3'
ELAVATION OF GRADED GROUND AT LOCATION STAKE = 7028.8'

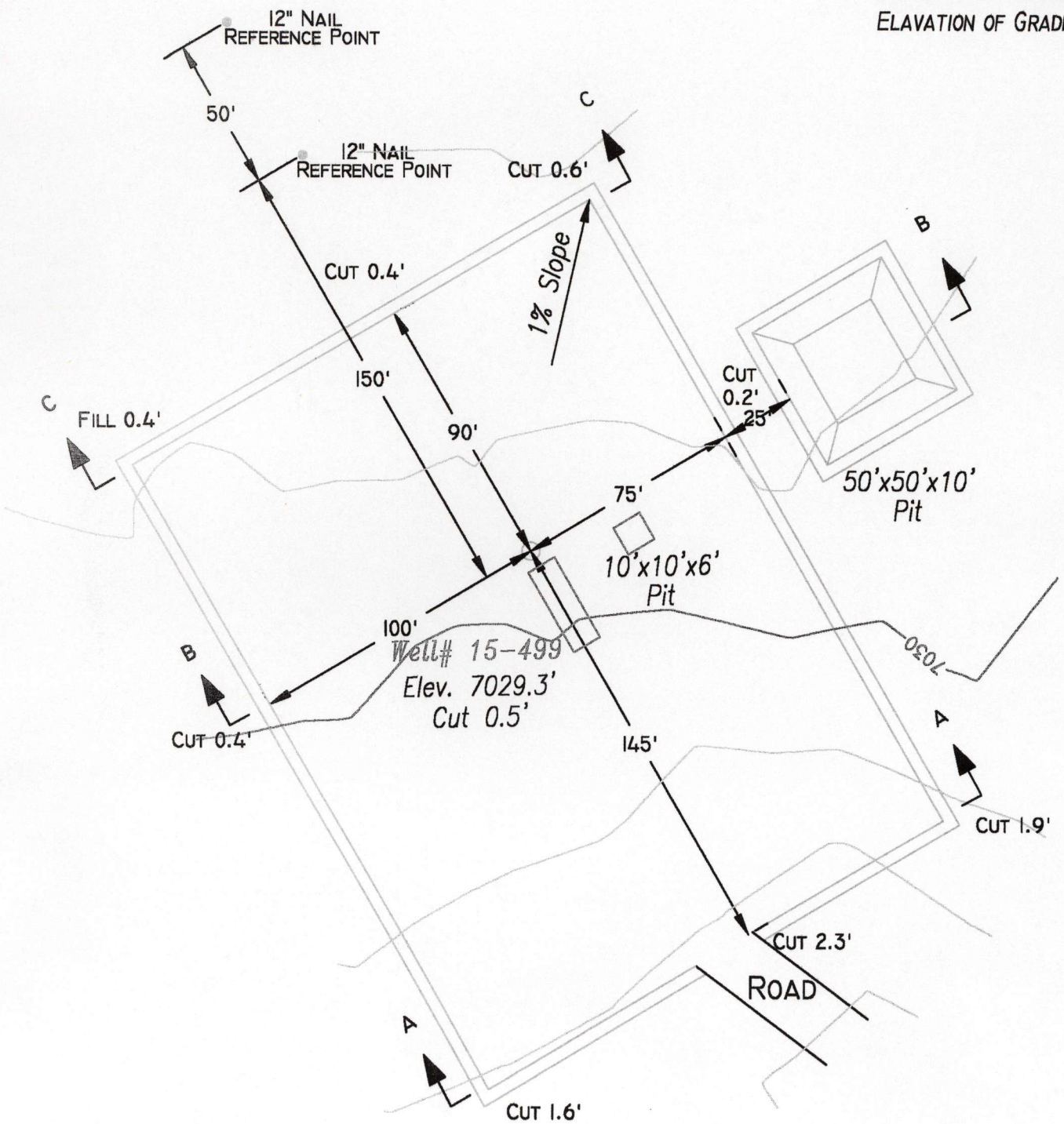

Talon Resources, Inc.
375 South Carbon Avenue, Suite 101
Price, Utah 84501
Ph: 435-637-8781
Fax: 435-636-8603

PHILLIPS PETROLEUM

LOCATION LAYOUT

Section 15, T14S, R8E, S.L.B.&M

WELL #15-499

Drawn By: J. STANSFIELD	Checked By: L.W.J.
Drawing No. A-2	Date: 06/27/01
	Scale: 1" = 50'
Sheet 2 of 4	Job No. 374

Exhibit "A" 2 of 3

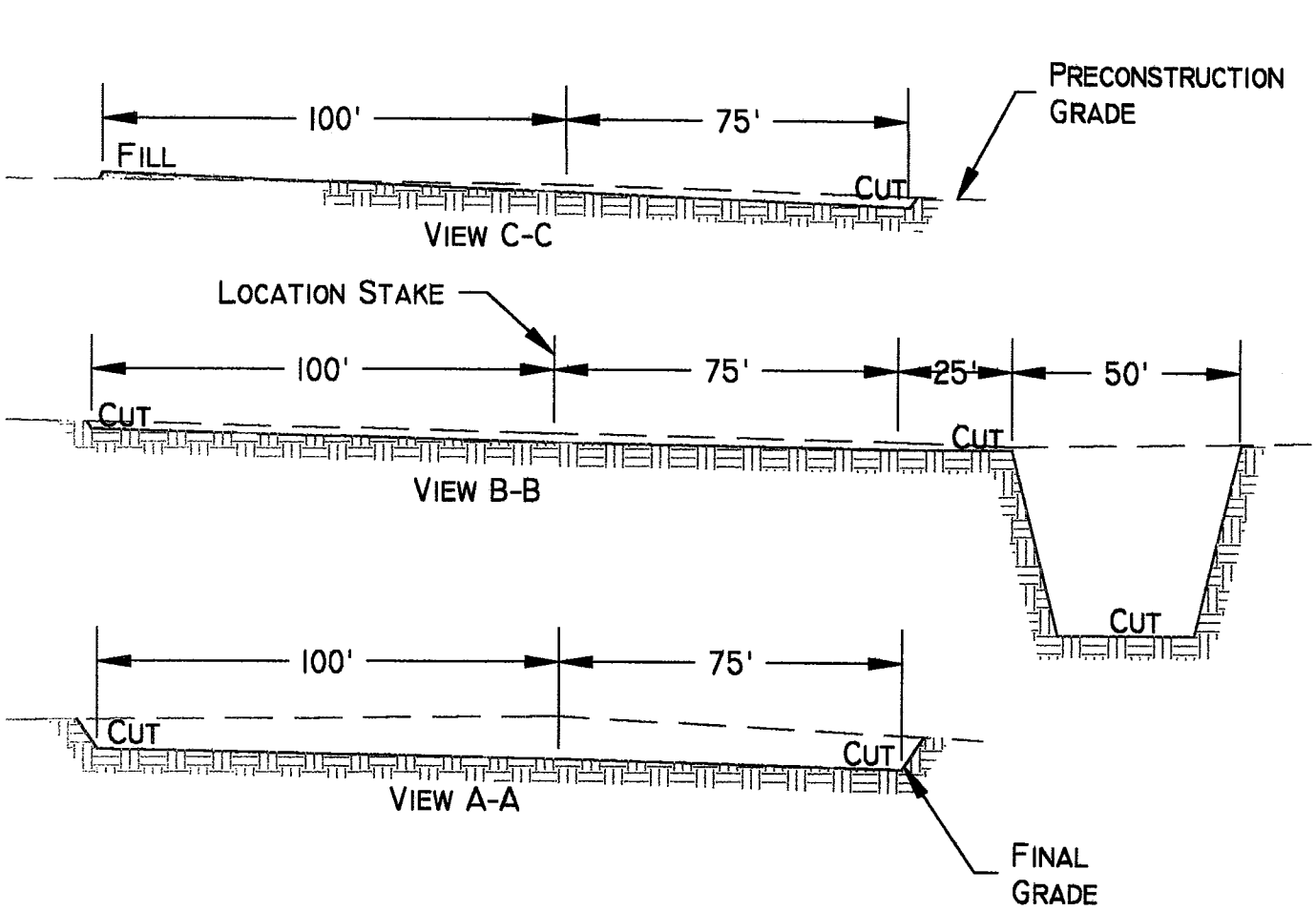

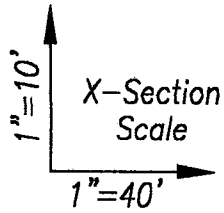

SLOPE = 1 1/2 : 1
(EXCEPT PIT)
PIT SLOPE = 1 ; 1

Talon Resources, Inc.
375 South Carbon Avenue, Suite 101
Price, Utah 84501
Ph: 435-637-8781
Fax: 435-636-8603

PHILLIPS PETROLEUM
TYPICAL CROSS SECTION
Section 15, T14S, R8E, S.L.B.&M.
WELL #15-499

Drawn By: J. STANSFIELD	Checked By: L.W.J.
Drawing No. C-1	Date: 06/27/01
	Scale: 1" = 40'
Sheet 3 of 4	Job No. 374

APPROXIMATE YARDAGES
CUT
(6")TOPSOIL STRIPPING = 750 CU. YDS.
REMAINING LOCATION = 1,400 CU, YDS.
TOTAL CUT = 2,150 CU. YDS.
TOTAL FILL = 14.5 CU. YDS.

Exhibit "A" 3 of 3

Exhibit "B" 1 of 2

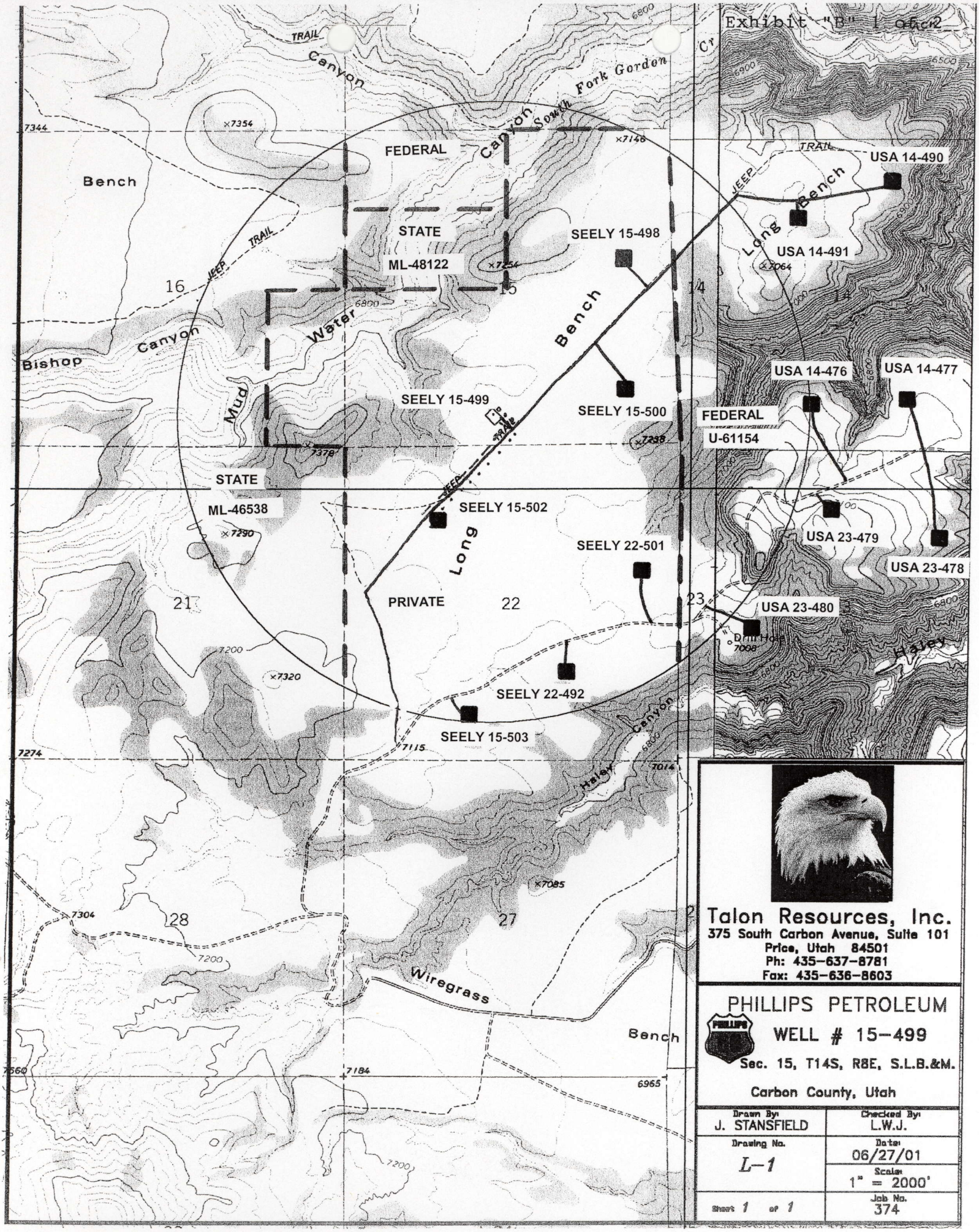

Talon Resources, Inc.
375 South Carbon Avenue, Suite 101
Price, Utah 84501
Ph: 435-637-8781
Fax: 435-636-8603

PHILLIPS PETROLEUM

WELL # 15-499

Sec. 15, T14S, R8E, S.L.B.&M.

Carbon County, Utah

Drawn By: J. STANSFIELD	Checked By: L.W.J.
Drawing No. L-1	Date: 06/27/01
	Scale: 1" = 2000'
Sheet 1 of 1	Job No. 374

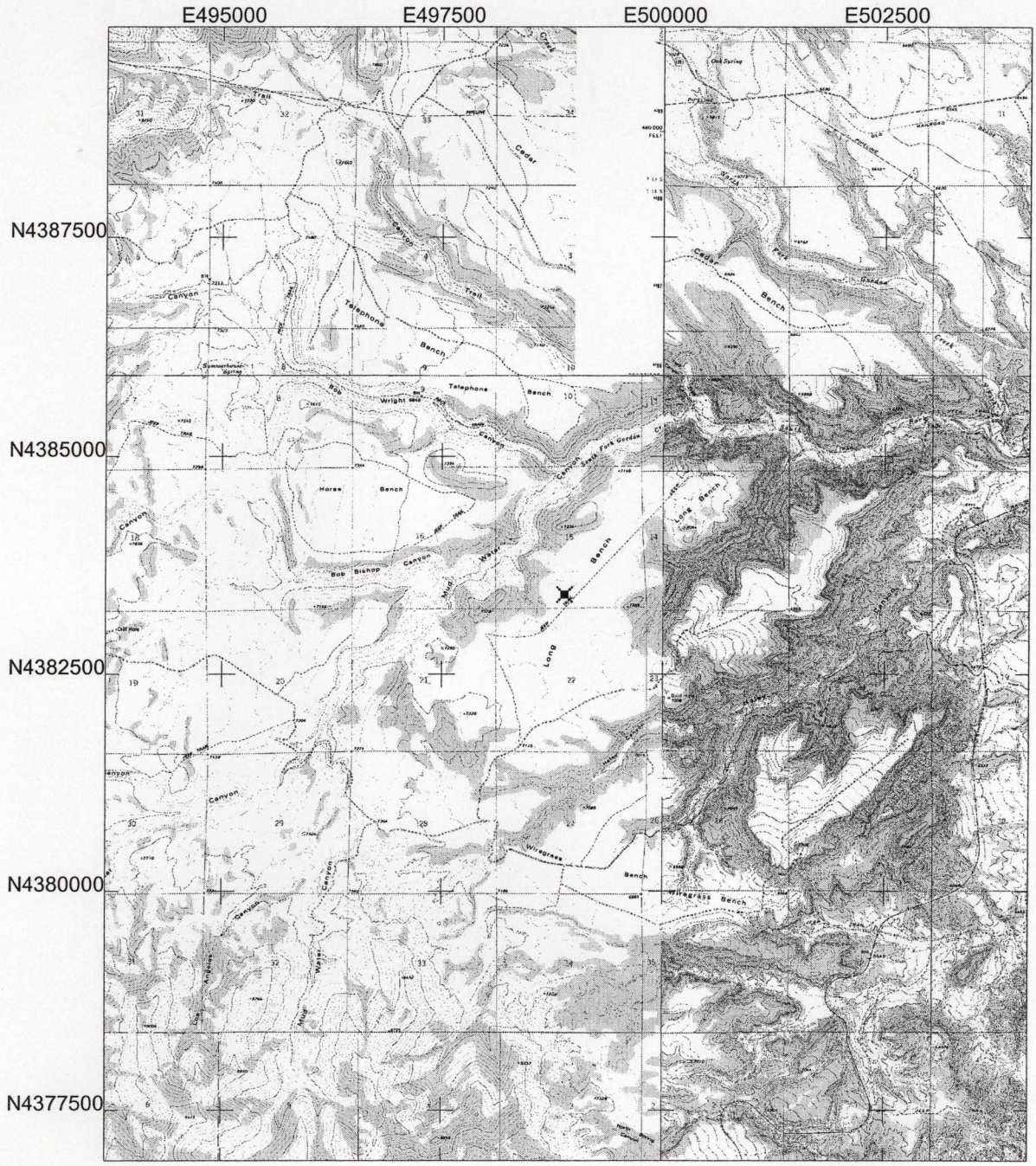

Seely 15-499
Section 15, T14S, R8E

Universal Transverse Mercator
12 North
NAD 1927 (Conus)

N

Scale 1:75000
0 8000
Feet

seely15-499.ssf
07/05/2001
Pathfinder Office
Trimble

APPROXIMATE LAYOUT OF RIG & EQUIPMENT

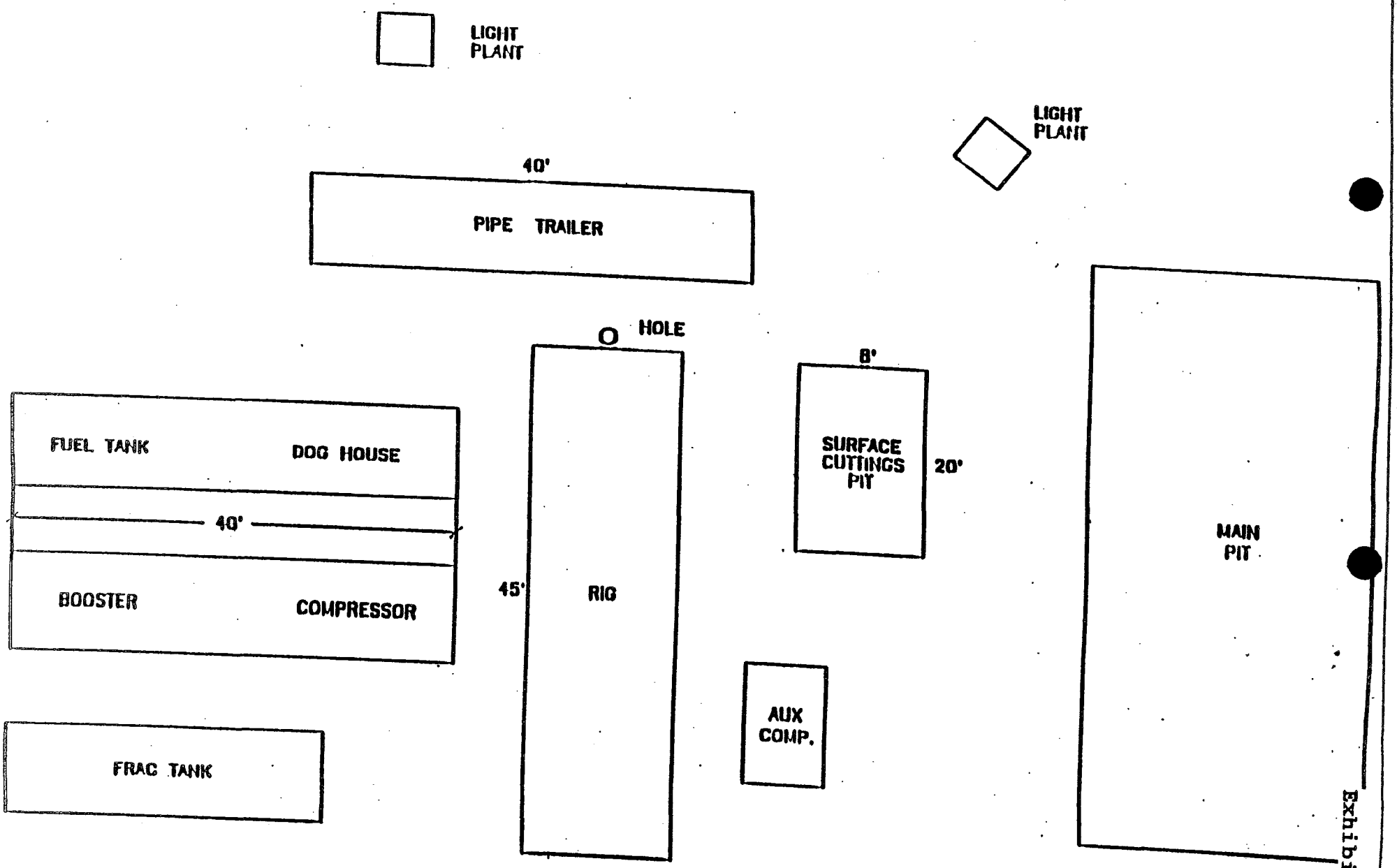

Exhibit "C

EXHIBIT "D"
DRILLING PROGRAM

Attached to Form 3
River Gas Corp.
Seely 15-499
SE/4, SW/4, Sec. 15, T14S, R08E, SLB & M
496' FSL, 2196' FWL
Carbon County, Utah

1. The Surface Geologic Formation

   Mancos Shale

2. Estimated Tops of Important Geologic Markers

   Blue Gate/Ferron 3260'

3. Projected Gas & H2O zones (Ferron Formation)

   Coals and sandstones 3410' - 3580'

   No groundwater is expected to be encountered.

   Casing & cementing will be done to protect potentially productive hydrocarbons, lost circulation zones, abnormal pressure zones, and prospectively valuable mineral deposits. All indications of usable water will be reported.

   Surface casing will be tested to 1400 psi.

4. The Proposed Casing and Cementing Programs

HOLE SIZE	SETTING DEPTH (INTERVAL)	SIZE (OD)	WEIGHT,GRADE & JOINT	NEW, USED
14"	40'	12-3/4"	Conductor	New
11"	388'	8-5/8"	24#ST&C	New
7-7/8"	3870'	5-1/2	17#LT&C	New

Cement Program **-Every attempt will be made to bring cement back to surface.**

Surface Casing: 150 sks G+2%CaCl+1/4#per sack flocel;15.8#/gal,density, 1.15 cu.ft/sk yield.

Production Casing: 342 sks 50/50 poz 8%gel +2%CaCl+10%extender;12.5#/gal, density, 1.92 cu.ft/sk yield.
105 sks "G" thixotropic, 14.2#/gal density, 1.61 cu.ft/sk yield

The following shall be entered in the driller's log:

1) Blowout preventer pressure tests, including test pressures and results;

2) Blowout preventer tests for proper functioning;

3) Blowout prevention drills conducted;

4) Casing run, including size, grade, weight, and depth set;

5) How the pipe was cemented, including amount of cement, type, whether cement circulated, location of the cementing tools, etc.;

6) Waiting on cement time for each casing string;

7) Casing pressure tests after cementing, including test pressures and results.

5. The Operator's Minimum Specifications for Pressure Control

Exhibit "G" is a schematic diagram of the blowout preventer equipment. A double gate 3000 psi BOPE will be used with a rotating head. This equipment will be tested to 2000 psi. All tests will be recorded in a Driller's Report Book. Physical operation of BOP's will be checked on each trip.

6. The Type and Characteristics of the Proposed Circulating Muds

0-300	11" hole	Drill with air, will mud-up if necessary.
300-TD	7 7/8" hole	Drill with air. 400 psi @ 1500-1800 Scf.

7. The Testing, Logging and Coring Programs are as followed

300-TD Gamma Ray, Density, Neutron Porosity, Induction, Caliper

Any Anticipated Abnormal Pressures or Temperatures

No abnormal pressures or temperatures have been noted or reported in wells drilled in the area nor at the depths anticipated in this well. Bottom hole pressure expected is 1680 psi max. No hydrogen sulfide or other hazardous gases or fluids have been found, reported or are known to exist at these depths in the area.

8. Anticipated Starting Date and Duration of the Operations.

The well will be drilled around September 2001.

Verbal and/or written notifications listed below shall be submitted in accordance with instructions from the Division of Oil, Gas & Mining:

(a) prior to beginning construction;

(b) prior to spudding;

(c) prior to running any casing or BOP tests;

(d) prior to plugging the well, for verbal plugging instructions.

Spills, blowouts, fires, leaks, accidents or other unusual occurrences shall be reported to the Division of Oil, Gas & Mining immediately.

EXHIBIT "E"
MULTIPOINT SURFACE USE PLAN

Attached to Form 3
River Gas Corp.
Seely 15-499
SE/4, SW/4, Sec. 15, T14S, R08E, SLB & M
496' FSL, 2196' FWL
Carbon County, Utah

1. **Existing Roads**
   a. We do not plan to change, alter or improve upon any existing state or county roads.
   b. Existing roads will be maintained in the same or better condition. See Exhibit "B".

2. **Planned Access**
   Approximately 2300' of new access is required (See Exhibit "B")

   a. Maximum Width: 24' travel surface with 27' base

   b. Maximum grade: 6%

   c. Turnouts: None

   d. Drainage design: 4 culverts may be required. Water will be diverted around well pad as necessary.

   e. If the well is productive, the road will be surfaced and maintained as necessary to prevent soil erosion and accommodate year-round traffic.

   f. Pipe and Power lines will follow the proposed access road.

3. **Location of Existing Wells**

   a. See Exhibit "B". There are 7 proposed and 0 existing wells within a one-mile radius of the proposed location.

4. **Location of Existing and/or Proposed Facilities**
   a. If the well is a producer, installation of production facilities will be as shown on Exhibit "H". Buried powerlines run along access on the east and north, gathering lines on the south or west.

   b. Rehabilitation of all pad areas not used for production facilities will be made in accordance with landowner stipulations.

5. **Location and Type of Water Supply**

   a. Water to be used for drilling will be purchased from the Price River Water Improvement District (a local source of municipal water) (tel. 435-637-6350).

   b. Water will be transported by truck over approved access roads.

   c. No water well is to be drilled for this location.

6. **Source of Construction Materials**

   a. Any necessary construction materials needed will be obtained locally and hauled to the location on existing roads.

   b. No construction or surfacing materials will be taken from Federal/Indian land.

7. **Methods for handling waste disposal**

   a. As the well will be air drilled, a small reserve pit will be constructed with a minimum of one-half the total depth below the original ground surface on the lowest point within the pit. The pit will not be lined unless conditions encountered during construction warrant it or if deemed necessary by the DOGM representative during the pre-site inspection. Three sides of the reserve pit will be fenced within 24 hours after completion of construction and the fourth side within 24 hours after drilling operation cease with woven wire topped with barbed wire to a height of not less than four feet. The fence will be kept in good repair while the pit is drying.

   b. Following drilling, the liquid waste will be evaporated from the pit and the pit back-filled and returned to natural grade. No liquid hydrocarbons will be discharged to the reserve pit or location.

   c. In the event fluids are produced, any oil will be retained in tankage until sold and any water produced will be retained until its quality can be determined. The quality and quantity of the water will determine the method of disposal.

   d. Trash will be contained in a portable metal container and will be hauled from location periodically and disposed of at an approved disposal site. Chemical toilets will be placed on location and sewage will be disposed of at an appropriate disposal site.

8. **Ancillary Facilities**

   a. We anticipate no need for ancillary facilities with the exception of one trailer to be located on the drill site.

9. **Wellsite Layout**

   a. Available topsoil will be removed from the location and stockpiled. Location of mud tanks, reserve and berm pits, and soil stockpiles will be located as shown on the attachments.

   b. A blooie pit will be located 100' from the drill hole. A line will be placed on the surface from the center hole to the pit. The pit will not be lined, but will be fenced on four sides to protect livestock/wildlife.

   c. Access to the well pad will be as shown on Exhibit "B".

   d. Natural runoff will be diverted around the well pad.

10. **Plans for Restoration of Surface**

   a. All surface areas not required for producing operations will be graded to as near original condition as possible and contoured to maintain possible erosion to a minimum.

   b. Available topsoil will be stockpiled and will be evenly distributed over the disturbed areas and the area will be reseeded as prescribed by the landowner.

   c. Pits and any other area that would present a hazard to wildlife or livestock will be fenced off when the rig is released and removed.

11. **Surface Ownership**:

   a. The wellsite and access road will be constructed on lands owned by Jorgensen for surface and Seely for minerals. The operator shall contact the landowner representative and the Division of Oil, Gas and mining 48 hours prior to beginning construction activities.

12. **Other Information**:

a. The primary surface use is farming and grazing. The nearest dwelling is approximately 20,000 feet Southeast.

b. Nearest live water is South Fork-Gordon Creek, located 2500' northwest.

c. If there is snow on the ground when construction begins, it will be removed before the soil is disturbed and piled downhill from the topsoil stockpile location.

d. The backslope and foreslope will be constructed no steeper than 4:1.

e. All equipment and vehicles will be confined to the access road and well pad.

f. A complete copy of the approved Application for Permit to Drill (APD) including conditions and stipulations, shall be on the wellsite during construction and drilling operations

There will be no deviation from the proposed drilling and/or workover program without prior approval from the Division of Oil, Gas & Mining.

13. **Company Representative**

Jean Semborski
Permitting Analyst
Phillips Petroleum Company
6825 S. 5300 W. P.O. Box 851
Price, Utah 84501
(435) 613-9777
(435) 820-9807

Mail Approved A.P.D. To:

Company Representative

Excavation Contractor

Nelco Contractors Inc.
Larry Jensen
(435) 637-3495
(435) 636-5268

14. **Certification**

I hereby certify that I, or persons under my direct supervision have inspected the proposed drillsite and access route; that I am familiar with the conditions which presently exist; that the statements made in this plan are, to the best of my knowledge, true and correct, and that the work associated with the operations proposed herein will be performed by Phillips Petroleum Company and its subcontractors in conformity with this plan and the terms and conditions under which it is approved.

7/5/01
Date

Jean Semborski
Permitting Analyst
Phillips Petroleum Company

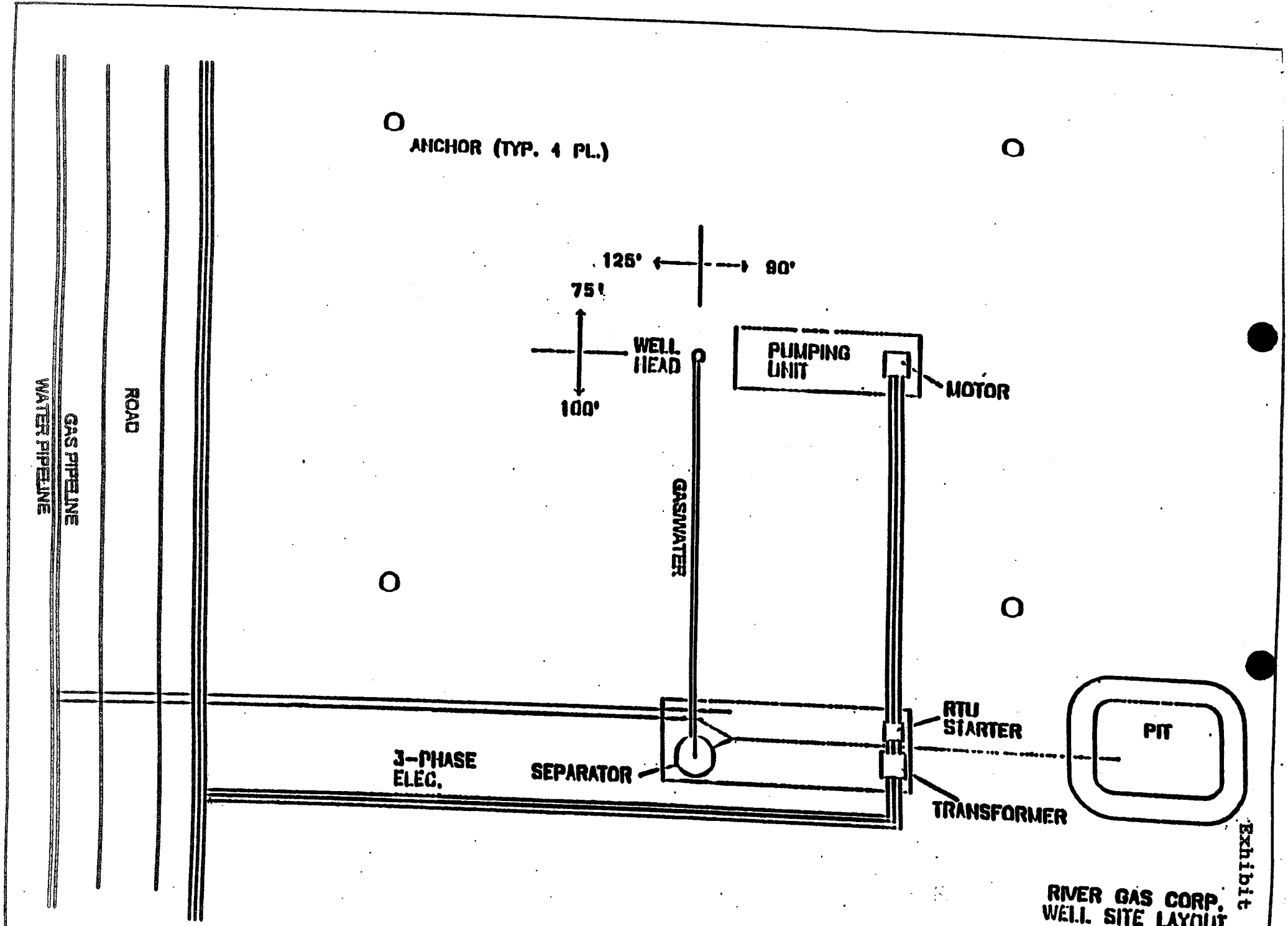

RIVER GAS CORP.
WELL SITE LAYOUT
215' X 175'

Exhibit "E"

TYPICAL ROAD CROSS-SECTION

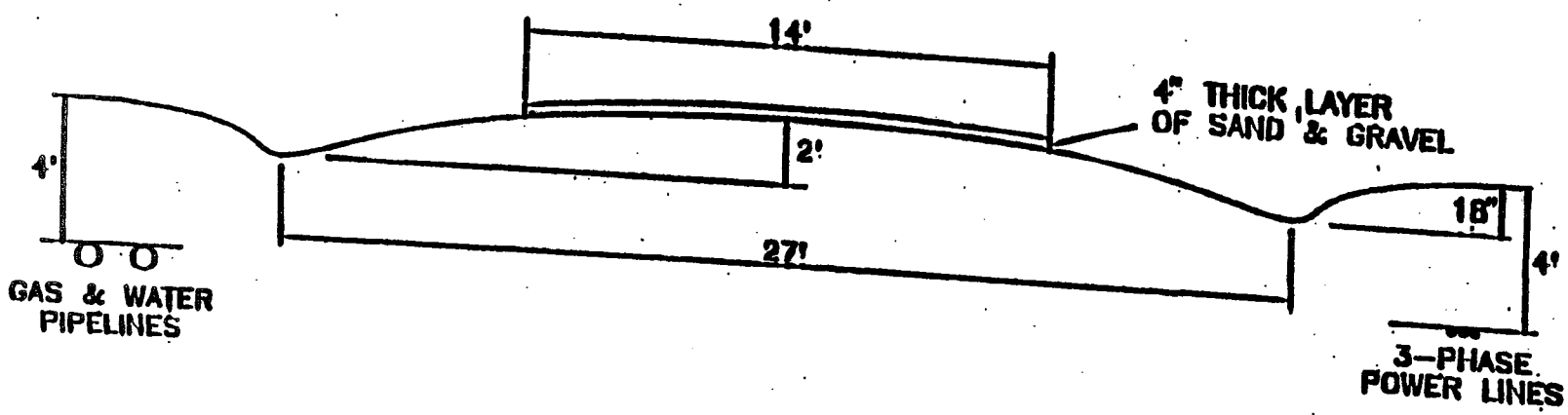

Exhibit "F"

Exhibit "G"

DIVERTER HEAD

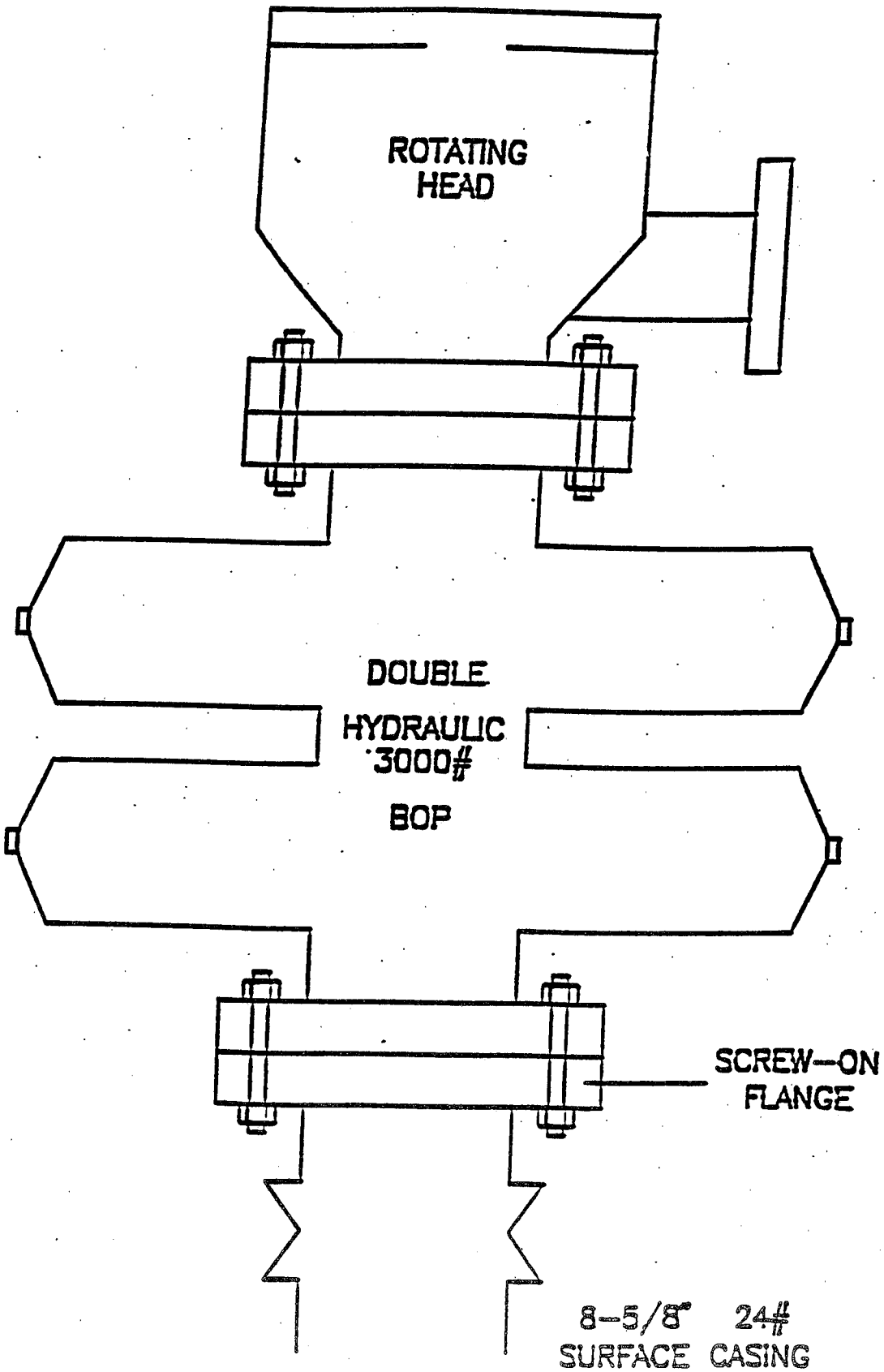

(1) 2" 5M FLANGED CHOKE
(2) 2" 5M GATE VALVE (FLANGED)
(3) 2" 5M STUDDED CROSS
(4) 2" 5M GATE VALVE (FLANGED)
(5) 2" 5M FLANGED CHOKE
(6) 2" 5M GATE VALVE (FLANGED)
(7) 2" LINE
(8) 2" 5M GATE VALVE (FLANGED)
(9) 3000# GAUGE

NOTE:
NUMBER 8 GATE VALVE SITS ON TOP OF MANIFOLD BETWEEN STUDDED CROSS AND 3000# GAUGE.

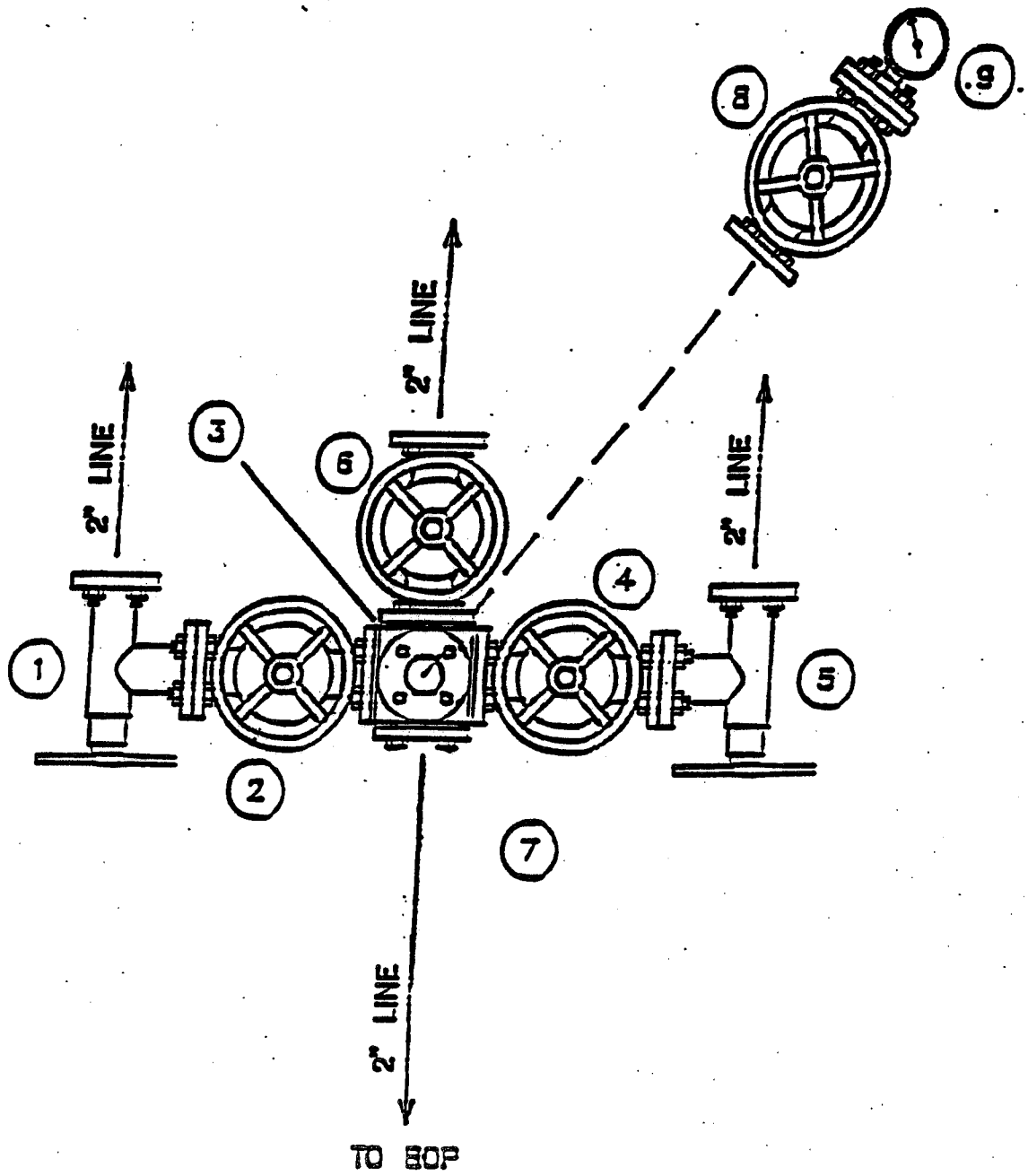

AND A NEW 2" BALL VALVE
FULL OPEN 5000PSI

MANIFOLD

BOND NUMBER 59 52 189
Corporate Surety Bond

STATE OF UTAH
BOND OF LESSEE

KNOW ALL MEN BY THESE PRESENTS, that we Phillips Petroleum Company of Bartlesville, Oklahoma as principal and Safeco Insurance Company of America, as surety, are held and firmly bound unto the State of Utah in the sum of Two Hundred Thousand Dollars ($200,000.00) lawful money of the United States to be paid to the School & Institutional Trust Lands Administration, as agent for the State of Utah, for the use and benefit of the State of Utah, and of any patentee or purchaser of any portion of the land covered by the hereinafter described lease heretofore sold or which may hereafter be sold with a reservation to the State of Utah, on the surface or of other mineral deposits of any portion of such lands, for which payment, well and truly to be made, we bind ourselves, and each of us, and each of our heirs, executors, administrators, successors, sublessees, and assignees, jointly and severally by these presents.

Signed with our hands and seals this 31st day of January, 2001

The condition of the foregoing obligation is such that,

~~WHEREAS: The State of Utah, as Lessor, issued a(n) lease, Lease Number and dated , to as lessor (and said lease has been duly assigned under date of to) to drill for, mine, extract, and remove all of the deposits in and under the following described lands, to wit:~~

Statewide Blanket Bond to cover all operations on state of Utah lands.

State lease Bond only. fc

NOW, THEREFORE, the principal and surety shall be obligated to pay all monies, rentals, royalties, costs of reclamation, damages to the surface and improvements thereon and any other damages, costs, expenses, penalties, interest or liabilities which arise by operation of or in connection with the above described lease(s) accruing to the Lessor and shall fully comply with all other terms and conditions of said lease, the rules, regulations, and policies relating thereto of the School & Institutional Trust Lands Administration, the Board of Oil, Gas and Mining, and the Division of Oil, Gas and Mining as they may now exist or may from time to time be modified or amended. This obligation is in effect even if the principal has conveyed part of its interest to a successor in interest. If the principal fully satisfies the above described obligations, then the surety's obligation to make payment to the State of Utah is void and of no effect, otherwise, it shall remain in full force and effect until released by the School & Institutional Trust Lands Administration.

Signed, sealed and delivered in the presence of

Terry L. Hicks
Witness

Terry L. Hicks
Witness

PHILLIPS PETROLEUM COMPANY

R. B. Gisi (SEAL)
R. B. Gisi Principal Asst. Treasurer

BONDING COMPANY SAFECO INSURANCE COMPANY OF AMERICA
BY Betty J. Miller
Betty J. Miller, Attorney-in-Fact
Attest: D. J. Rhem
Secretary
Resident Agent: N/A
Bonding Co. Address: Millenium Corpo Park, Bldg. C, 18400 NE Union Hill R
Redmond, WA 98052
Corporate Seal of Bonding Company Must be Affixed.

APPROVED AS TO FORM:
JAN GRAHAM
ATTORNEY GENERAL
By

SAFECO®

POWER OF ATTORNEY

SAFECO INSURANCE COMPANY OF AMERICA
GENERAL INSURANCE COMPANY OF AMERICA
HOME OFFICE: SAFECO PLAZA
SEATTLE, WASHINGTON 98185

No. 8718

KNOW ALL BY THESE PRESENTS:

That **SAFECO INSURANCE COMPANY OF AMERICA** and **GENERAL INSURANCE COMPANY OF AMERICA**, each a Washington corporation, does each hereby appoint
************************SANDRA L. HABERLY; BETTY J. MILLER, Bartlesville, Oklahoma******************

its true and lawful attorney(s)-in-fact, with full authority to execute on its behalf fidelity and surety bonds or undertakings and other documents of a similar character issued in the course of its business, and to bind the respective company thereby.

IN WITNESS WHEREOF, SAFECO INSURANCE COMPANY OF AMERICA and **GENERAL INSURANCE COMPANY OF AMERICA** have each executed and attested these presents

this 27th day of September, 19 93.

R A Pierson
R.A. PIERSON, SECRETARY

W Randall Stoddard
W. RANDALL STODDARD, PRESIDENT

CERTIFICATE

Extract from the By-Laws of **SAFECO INSURANCE COMPANY OF AMERICA** and of **GENERAL INSURANCE COMPANY OF AMERICA:**

"Article V, Section 13. - FIDELITY AND SURETY BONDS . . . the President, any Vice President, the Secretary, and any Assistant Vice President appointed for that purpose by the officer in charge of surety operations, shall each have authority to appoint individuals as attorneys-in-fact or under other appropriate titles with authority to execute on behalf of the company fidelity and surety bonds and other documents of similar character issued by the company in the course of its business . . . On any instrument making or evidencing such appointment, the signatures may be affixed by facsimile. On any instrument conferring such authority or on any bond or undertaking of the company, the seal, or a facsimile thereof, may be impressed or affixed or in any other manner reproduced; provided, however, that the seal shall not be necessary to the validity of any such instrument or undertaking."

Extract from a Resolution of the Board of Directors of **SAFECO INSURANCE COMPANY OF AMERICA** and of **GENERAL INSURANCE COMPANY OF AMERICA** adopted July 28, 1970.

"On any certificate executed by the Secretary or an assistant secretary of the Company setting out,
(i) The provisions of Article V, Section 13 of the By-Laws, and
(ii) A copy of the power-of-attorney appointment, executed pursuant thereto, and
(iii) Certifying that said power-of-attorney appointment is in full force and effect,
the signature of the certifying officer may be by facsimile, and the seal of the Company may be a facsimile thereof."

I, R. A. Pierson, Secretary of **SAFECO INSURANCE COMPANY OF AMERICA** and of **GENERAL INSURANCE COMPANY OF AMERICA**, do hereby certify that the foregoing extracts of the By-Laws and of a Resolution of the Board of Directors of these corporations, and of a Power of Attorney issued pursuant thereto, are true and correct, and that both the By-Laws, the Resolution and the Power of Attorney are still in full force and effect.

IN WITNESS WHEREOF, I have hereunto set my hand and affixed the facsimile seal of said corporation

this 31st day of January, ~~19~~ 2001.

SAFECO INSURANCE COMPANY OF AMERICA CORPORATE SEAL 1954 STATE OF WASHINGTON

GENERAL INSURANCE COMPANY OF AMERICA CORPORATE SEAL 1923 STATE OF WASHINGTON

R A Pierson
R.A. PIERSON, SECRETARY

S-974/EP 1/93

S-1787 9.97

® Registered trademark of SAFECO Corporation.

WORKSHEET
APPLICATION FOR PERMIT TO DRILL

APD RECEIVED: 07/09/2001

API NO. ASSIGNED: 43-007-30798

WELL NAME: SEELY 15-499

OPERATOR: PHILLIPS PETROLEUM (N1475)

CONTACT: JEAN SEMBORSKI

PHONE NUMBER: 435-613-9777

PROPOSED LOCATION:

SESW 15 140S 080E

SURFACE: 0496 FSL 2196 FWL

BOTTOM: 0496 FSL 2196 FWL

CARBON

UNDESIGNATED (2)

LEASE TYPE: 4 - Fee

LEASE NUMBER: FEE

SURFACE OWNER: 4 - Fee

PROPOSED FORMATION: FRSD

INSPECT LOCATN BY: / /

Tech Review	Initials	Date
Engineering	DKD	8/14/01
Geology		
Surface		

RECEIVED AND/OR REVIEWED:

✓ Plat

✓ Bond: Fed[] Ind[] Sta[] Fee[4]
(No. P-207328)

N Potash (Y/N)

N Oil Shale 190-5 (B) or 190-3 or 190-13

✓ Water Permit
(No. PRWID)

N RDCC Review (Y/N)
(Date:)

Y Fee Surf Agreement (Y/N)

LOCATION AND SITING:

R649-2-3. Unit DRUNKARDS WASH

R649-3-2. General
Siting: 460 From Qtr/Qtr & 920' Between Wells

R649-3-3. Exception

✓ Drilling Unit
Board Cause No: 243-6
Eff Date: 2-14-2001
Siting: 460' fr. Unit Boundary & Uncomm. Tract

R649-3-11. Directional Drill

COMMENTS: Need Presite. (7-27-01)

STIPULATIONS: (1) STATEMENT OF BASIS

Utah Oil Gas and Mining

OPERATOR: PHILLIPS PETRO CO (N1475)

SEC. 15 & 22, T14S, R8E

FIELD: UNDESIGNATED (002)

COUNTY: CARBON UNIT: DRUNKARDS WASH
CAUSE: 243-6

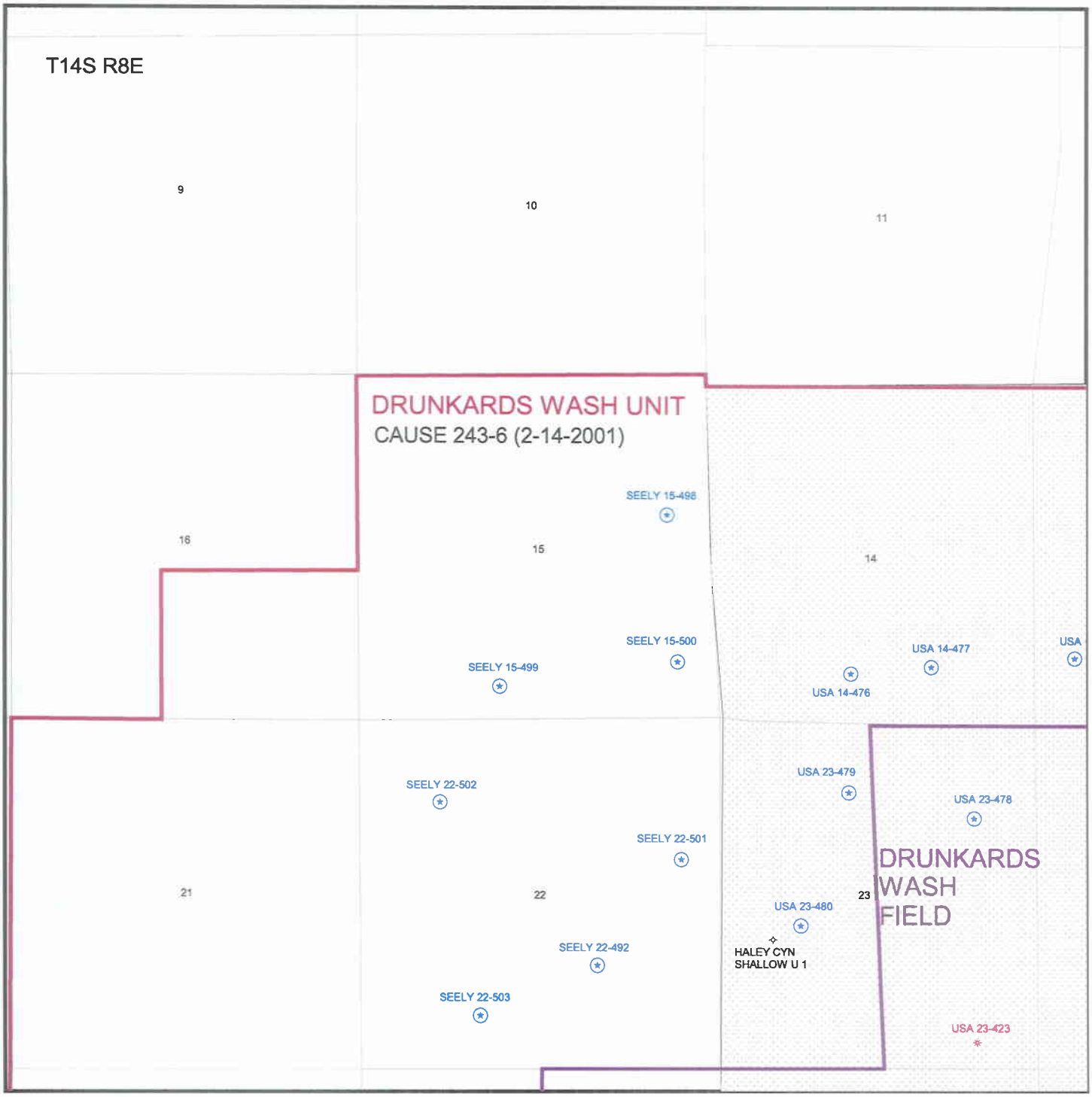

PREPARED BY: LCORDOVA
DATE: 16-JULY-2001

08-01 Phillips Seely 15-49

Casing Schematic

Surface

Manicos

TOC @ 0.

TOC @ 0.

W/13% washout

8-5/8"
MW 8.4
Frac 19.

Surface
391. MD

BOP

BHP
(0.052)(3880)(8.4) = 1695 psi
Anticipated = 1680 psi

Gas
(0.12)(3880) = 466 psi
MASP = 1230 psi

3M BOP proposed

Adequate DRD 8/13/01

3057' W/5% washout
TOC Tail

3260'
Blue Gate/Ferron

3410'

Coals/ss

3580'

5-1/2"
MW 8.4

Production
3870. MD

Well name:	**08-01 Phillips Seely 15-499**
Operator:	**Phillips Petroleum Company**
String type:	Surface
Project ID:	43-007-30798
Location:	Carbon County

Design parameters:

Collapse

Mud weight: 8.400 ppg

Design is based on evacuated pipe.

Burst

Max anticipated surface pressure: 0 psi

Internal gradient: 0.436 psi/ft

Calculated BHP 171 psi

No backup mud specified.

Minimum design factors:

Collapse:

Design factor 1.125

Burst:

Design factor 1.00

Tension:

8 Round STC:	1.80 (J)
8 Round LTC:	1.80 (J)
Buttress:	1.60 (J)
Premium:	1.50 (J)
Body yield:	1.50 (B)

Tension is based on air weight.

Neutral point: 342 ft

Environment:

H2S considered?	No
Surface temperature:	65 °F
Bottom hole temperature:	70 °F
Temperature gradient:	1.40 °F/100ft
Minimum section length:	250 ft

Cement top: Surface

Non-directional string.

Re subsequent strings:

Next setting depth:	3,900 ft
Next mud weight:	8.400 ppg
Next setting BHP:	1,702 psi
Fracture mud wt:	19.000 ppg
Fracture depth:	396 ft
Injection pressure	391 psi

Run Seq	Segment Length (ft)	Size (in)	Nominal Weight (lbs/ft)	Grade	End Finish	True Vert Depth (ft)	Measured Depth (ft)	Drift Diameter (in)	Est. Cost ( )
1	391	8.625	24.00	J-55	ST&C	391	391	7.972	2562

Run Seq	Collapse Load (psi)	Collapse Strength (psi)	Collapse Design Factor	Burst Load (psi)	Burst Strength (psi)	Burst Design Factor	Tension Load (Kips)	Tension Strength (Kips)	Tension Design Factor
1	171	1370	8.03	171	2950	17.29	9	244	26.00 J

Prepared by: Dustin Doucet, Utah Dept. of Natural Resources

Phone: 801-538-5281

FAX: 801-359-3940

Date: August 13,2001

Salt Lake City, Utah

ENGINEERING STIPULATIONS: NONE

Collapse strength is based on the Westcott, Dunlop & Kemler method of biaxial correction for tension.

Collapse is based on a vertical depth of 391 ft, a mud weight of 8.4 ppg The casing is considered to be evacuated for collapse purposes.

Burst strength is not adjusted for tension.

Engineering responsibility for use of this design will be that of the purchaser.

Well name:	**08-01 Phillips Seely 15-499**
Operator:	**Phillips Petroleum Company**
String type:	Production
Project ID:	43-007-30798
Location:	Carbon County

Design parameters:

Collapse

Mud weight: 8.400 ppg
Design is based on evacuated pipe.

Burst

Max anticipated surface pressure: 0 psi
Internal gradient: 0.436 psi/ft
Calculated BHP 1,689 psi

No backup mud specified.

Minimum design factors:

Collapse:

Design factor 1.125

Burst:

Design factor 1.00

Tension:

8 Round STC:	1.80 (J)
8 Round LTC:	1.80 (J)
Buttress:	1.60 (J)
Premium:	1.50 (J)
Body yield:	1.50 (B)

Tension is based on air weight.
Neutral point: 3,377 ft

Environment:

H2S considered?	No
Surface temperature:	65 °F
Bottom hole temperature:	119 °F
Temperature gradient:	1.40 °F/100ft
Minimum section length:	250 ft
Cement top:	Surface

Non-directional string.

Run Seq	Segment Length (ft)	Size (in)	Nominal Weight (lbs/ft)	Grade	End Finish	True Vert Depth (ft)	Measured Depth (ft)	Drift Diameter (in)	Est. Cost ( )
1	3870	5.5	17.00	N-80	LT&C	3870	3870	4.767	27762

Run Seq	Collapse Load (psi)	Collapse Strength (psi)	Collapse Design Factor	Burst Load (psi)	Burst Strength (psi)	Burst Design Factor	Tension Load (Kips)	Tension Strength (Kips)	Tension Design Factor
1	1689	6290	3.72	1689	7740	4.58	66	348	5.29 J

Prepared by: Dustin Doucet
Utah Dept. of Natural Resources
Phone: 801-538-5281
FAX: 801-359-3940
Date: August 13,2001
Salt Lake City, Utah

ENGINEERING STIPULATIONS: NONE
Collapse strength is based on the Westcott, Dunlop & Kemler method of biaxial correction for tension.
Collapse is based on a vertical depth of 3870 ft, a mud weight of 8.4 ppg The casing is considered to be evacuated for collapse purposes.
Burst strength is not adjusted for tension.

Engineering responsibility for use of this design will be that of the purchaser.

DIVISION OF OIL, GAS AND MINING

APPLICATION FOR PERMIT TO DRILL
STATEMENT OF BASIS

Operator Name: Phillips Petroleum

Name & Number: Seely 15-499

API Number: 43-007-30798

Location: 1/4,1/4 SESW Sec. 15 T. 14S R. 8E

Geology/Ground Water:

The sandy, silty, moderately permeable soil is developed on alluvium covering the Upper Portion of the Blue Gate Shale Member of the Mancos Shale. The Garley Canyon Sandstone Beds of the Emery Sandstone Member of the Mancos Shale are likely to be present at this location. If the Garley Canyon Beds and the Emery Sandstone Member are present (probable) and wet (possible – standing water was found in upper Garley Canyon Beds in Pinnacle Canyon ~4 miles east), these strata should be included within the interval protected by the surface casing string. The operator is informed of the potential for saturated Garley Canyon Beds and Emery Sandstone Member and will respond to protect the zones by extending the surface casing string as needed. Extending the proposed casing and cement will adequately isolate any shallow zones containing water.

Reviewer: Christopher J. Kierst **Date:** 8/2/2001

Surface:

The area drains into a tributary of Mud Water Canyon. Precipitation will be deflected around the location with berms and culverts. There are no nearby culinary or irrigation water supply wells. The site was photographed and characterized on 7/27/2001. Provision was made to ensure site rehabilitation, litter and waste control, preservation of drainage patterns and the integrity of local infrastructure, groundwater and other resources. The well utilities and gas gathering system will follow the approach roadway. Stock watering rights exist on Mud Water Creek and South Fork Gordon Creek and on springs located in NWNW (SW of pad) and NENE of Section 22.

Reviewer: Christopher J. Kierst **Date:** 8/2/2001

Conditions of Approval/Application for Permit to Drill:

1) Culverts sufficient to manage expected runoff, standing and surface water in crossed drainages.
2) Berm location and pit.
3) Site infrastructure as per drilling location plat.
4) Soil storage as per drilling location plat.
5) Extend surface casing as needed to contain any water in the Emery Sandstone Member and Garley Canyon Beds of Blue Gate Member of the Mancos Shale.
6) Minimum 12-mil synthetic pit liner required.

ON-SITE PREDRILL EVALUATION

Division of Oil, Gas and Mining

OPERATOR: Phillips Petroleum

WELL NAME & NUMBER: Seely 15-499

API NUMBER: 4300730798

LEASE: Private FIELD/UNIT: Drunkards Wash

LOCATION: 1/4,1/4 SESW Sec: 15 TWP: 14S RNG: 8E 496 FSL 2196 FWL

LEGAL WELL SITING: 460' From Lease Boundaries and 920' from other wells

GPS COORD (UTM): **X** = 498,789; **Y** = 4,383,410 (Widget UTMs)
X = 498,878 **Y** = 4,383,415 (Garmin GPS field reading)

SURFACE OWNER: Gale Jorgensen of Castledale, UT (435)381-2438

PARTICIPANTS

C. Kierst and Mark Jones(DOGM), J. Semborski and D. Walker(Phillips), L.Jensen(Nelco) and G. Jorgensen(Surface Owner). D. Levanger(County) was informed of the proceedings but was unable to attend.

REGIONAL/LOCAL SETTING & TOPOGRAPHY

Western margin of Colorado Plateau / on an upper bench (Long Bench) about 2¼ miles northeast of the foot of the Wasatch Plateau, ~5 miles north of Wattis, Utah. The slope is to the north into a tributary of Mud Water Canyon. This location is ~11 miles west of Price, Utah.

SURFACE USE PLAN

CURRENT SURFACE USE: Wildlife habitat, grazing.

PROPOSED SURFACE DISTURBANCE: 235' X 175' pad with 50' X 50' X 10' attached pit; new access road is ~2,300' long.

LOCATION OF EXISTING WELLS WITHIN A 1-MILE RADIUS: 6 NEW status RGC CBM wells.

LOCATION OF PRODUCTION FACILITIES AND PIPELINES: None nearby.

SOURCE OF CONSTRUCTION MATERIAL: Gravel location and approach road; soil stored in berm.

ANCILLARY FACILITIES: None

WASTE MANAGEMENT PLAN:

Portable chemical toilets which will be emptied into the municipal waste treatment system; garbage cans on location will be emptied into centralized dumpsters which will be emptied into an approved landfill.

Crude oil production is unlikely. Drilling fluid, completion / frac fluid and cuttings will be buried in the pit after evaporation and slashing the pit liner. Produced water will be gathered to the evaporation pit and eventually injected into the Navajo Sandstone via a RGC-operated salt water disposal well. Used oil from drilling operations and support is hauled to a used oil recycler and reused.

ENVIRONMENTAL PARAMETERS

AFFECTED FLOODPLAINS AND/OR WETLANDS: The area drains into Mud Water Canyon, Gordon Creek Canyon and finally the Price River.

FLORA/FAUNA: Grasses, sagebrush, cactus / rodents, birds, coyotes, elk and deer critical winter range, insects, reptiles.

SOIL TYPE AND CHARACTERISTICS: Sandy, silty, moderately permeable soil on alluvium covering the Upper Portion of the Blue Gate Shale Member of the Mancos Shale.

SURFACE FORMATION & CHARACTERISTICS: Alluvium covering the Upper Portion of the Blue Gate Shale Member of the Mancos Shale (above the Emery Sandstone Member) - gray, bentonitic, occasional thin sandstone beds. Alluvium - buff, sandy, silty, occasional cobbles.

EROSION/SEDIMENTATION/STABILITY: Stable

PALEONTOLOGICAL POTENTIAL: None observed.

RESERVE PIT

CHARACTERISTICS: 50' X 50' X 10'; dugout, earthen pit.

LINER REQUIREMENTS (Site Ranking Form attached): Minimum 12-mil synthetic pit liner.

SURFACE RESTORATION/RECLAMATION PLAN

As per Surface Owner's Agreement.

SURFACE AGREEMENT: **No Surface Owner's Agreement yet!**

CULTURAL RESOURCES/ARCHAEOLOGY: Archaeological survey completed and on file with state.

OTHER OBSERVATIONS/COMMENTS

ATTACHMENTS:
4 photographs were taken.

Christopher Kierst	7/27/2001 / 2:08 PM
DOGM REPRESENTATIVE	DATE/TIME

Evaluation Ranking Criteria and Ranking Score
For Reserve and Onsite Pit Liner Requirements

Site-Specific Factors	Ranking	Site Ranking
Distance to Groundwater (feet)		
>200	0	
100 to 200	5	
75 to 100	10	
25 to 75	15	
<25 or recharge area	20	0
Distance to Surf. Water (feet)		
>1000	0	
300 to 1000	2	
200 to 300	10	
100 to 200	15	
< 100	20	0
Distance to Nearest Municipal Well (feet)		
>5280	0	
1320 to 5280	5	
500 to 1320	10	
<500	20	0
Distance to Other Wells (feet)		
>1320	0	
300 to 1320	10	
<300	20	0
Native Soil Type		
Low permeability	0	
Mod. permeability	10	
High permeability	20	10
Fluid Type		
Air/mist	0	
Fresh Water	5	
TDS >5000 and <10000	10	
TDS >10000 or Oil Base Mud	15	
Fluid containing significant levels of hazardous constituents	20	5
Drill Cuttings		
Normal Rock	0	
Salt or detrimental	10	0
Annual Precipitation (inches)		
<10	0	
10 to 20	5	
>20	10	5
Affected Populations		
<10	0	
10 to 30	6	
30 to 50	8	
>50	10	0
Presence of Nearby Utility Conduits		
Not Present	0	
Unknown	10	
Present	15	0

Final Score (level I sensitivity) 20

Sensitivity Level I = 20 or more total containment is required.
Sensitivity Level II = 15-19 lining is discretionary.
Sensitivity Level III = below 15 no specific lining is required.

Phillips Seely 15-499 4300730798, 496 FSL, 2196 FWL, SESW S. 15, T. 14 S., R. 8 E., Carbon Co., UT 7/27/2001 C. Kierst

UTAH DIVISION OF WATER RIGHTS
WATER RIGHT POINT OF DIVERSION PLOT CREATED THU, JUL 19, 2001, 5:01 PM
PLOT SHOWS LOCATION OF 37 POINTS OF DIVERSION

PLOT OF AN AREA WITH A RADIUS OF 5280 FEET FROM A POINT
N 496 FEET, E 2196 FEET OF THE SW CORNER,
SECTION 15 TOWNSHIP 14S RANGE 8E SL BASE AND MERIDIAN

PLOT SCALE IS APPROXIMATELY 1 INCH = 2000 FEET

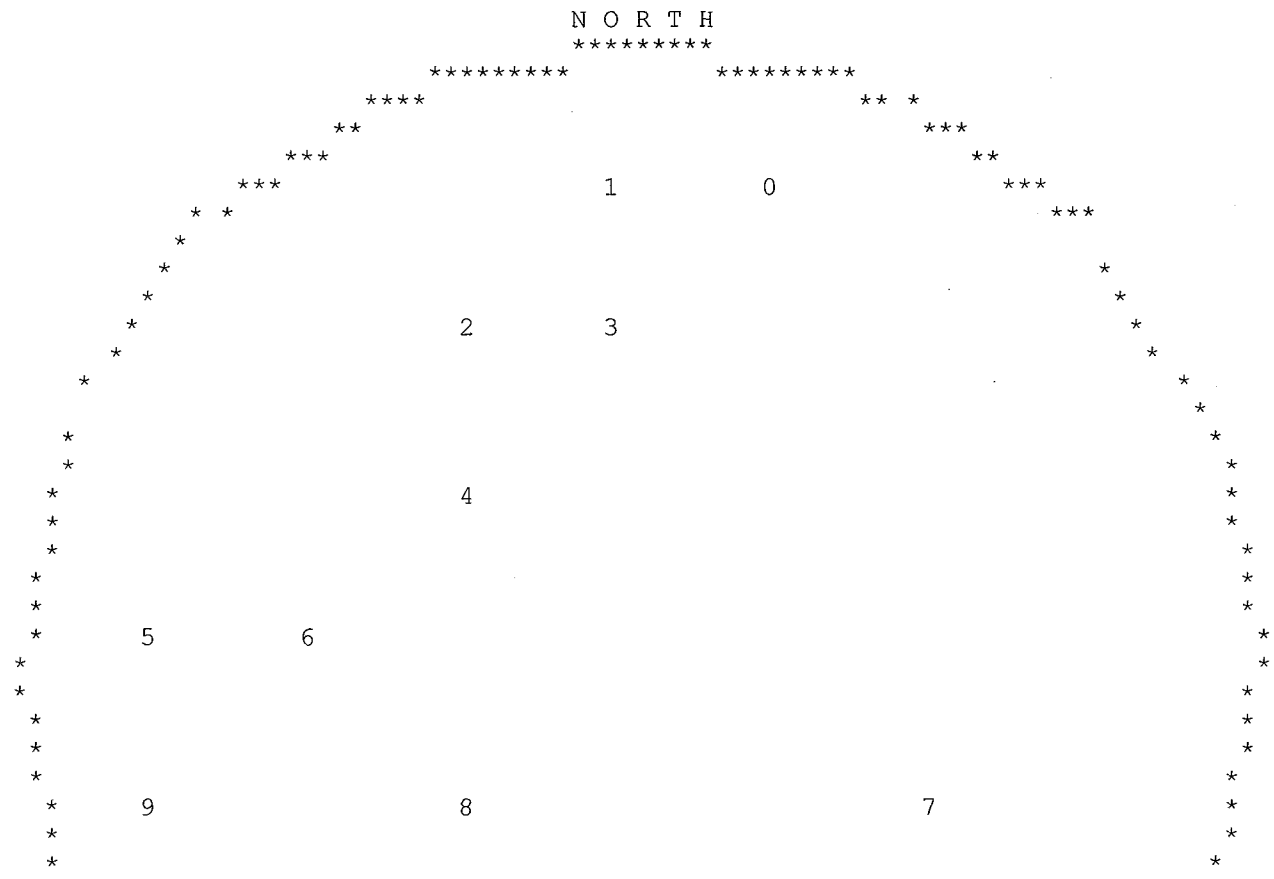

UTAH DIVISION OF WATER RIGHTS
NWPLAT POINT OF DIVERSION LOCATION PROGRAM

MAP CHAR	WATER RIGHT	QUANTITY CFS	AND/OR AC-FT	SOURCE DESCRIPTION or WELL INFO DIAMETER	DEPTH	YEAR LOG	POINT OF DIVERSION DESCRIPTION NORTH	EAST	CNR	SEC	TWN	RNG	B&M
0	91 1479	.0000	.00	South Fork Gordon Creek									
	WATER USE(S): STOCKWATERING												
	Jorgensen, Ray												
0	91 1479	.0000	.00	South Fork Gordon Creek									
	WATER USE(S): STOCKWATERING												
	Jorgensen, Ray												
0	91 1608	.0000	.00	South Fork Gordon Creek									
	WATER USE(S):												
	Jorgensen, John L.												
0	91 1608	.0000	.00	South Fork Gordon Creek									
	WATER USE(S):												

PRIORITY DATE: 00/00/18
Castle Dale

PRIORITY DATE: 00/00/18
Castle Dale

PRIORITY DATE: 00/00/18

PRIORITY DATE: 00/00/18

Jorgensen, John L.

0 91 1616 .0000 .00 South Fork Gordon Creek PRIORITY DATE: 00/00/18
WATER USE(S): Castle Dale
Jorgensen, Joseph C.

0 91 1616 .0000 .00 South Fork Gordon Creek PRIORITY DATE: 00/00/18
WATER USE(S): Castle Dale
Jorgensen, Joseph C.

0 91 1624 .0000 .00 South Fork Gordon Creek PRIORITY DATE: 00/00/18
WATER USE(S): Castle Dale
Jorgensen, A. Gale

0 91 1624 .0000 .00 South Fork Gordon Creek PRIORITY DATE: 00/00/18
WATER USE(S): Castle Dale
Jorgensen, A. Gale

0 91 1632 .0000 .00 South Fork Gordon Creek PRIORITY DATE: 00/00/18
WATER USE(S): Castle Dale
Jorgensen, Theron Don

0 91 1632 .0000 .00 South Fork Gordon Creek PRIORITY DATE: 00/00/18
WATER USE(S): Castle Dale
Jorgensen, Theron Don

1 91 2393 .0000 .00 South Fork Gordon Creek PRIORITY DATE: 00/00/18
WATER USE(S): Salt Lake City
State of Utah Division of Wildlife Resou 1594 West North Temple, Ste 2110

1 91 2393 .0000 .00 South Fork Gordon Creek PRIORITY DATE: 00/00/18
WATER USE(S): Salt Lake City
State of Utah Division of Wildlife Resou 1594 West North Temple, Ste 2110

2 91 3717 .0000 .00 Mud Water Creek PRIORITY DATE: 00/00/18
WATER USE(S): STOCKWATERING Salt Lake City
State of Utah School & Institutional Tru 675 East 500 South, 5th Floor

3 91 3717 .0000 .00 Mud Water Creek PRIORITY DATE: 00/00/18
WATER USE(S): STOCKWATERING Salt Lake City
State of Utah School & Institutional Tru 675 East 500 South, 5th Floor

4 91 1181 .0000 .00 South Fork Gordon Creek PRIORITY DATE: 00/00/18
WATER USE(S): Castle Dale
Jorgensen, Ray

4 91 1607 .0000 .00 South Fork Gordon Creek PRIORITY DATE: 00/00/18
WATER USE(S):

Jorgensen, John L.

4 91 1615 .0000 .00 South Fork Gordon Creek PRIORITY DATE: 00/00/18
WATER USE(S): Castle Dale
Jorgensen, Joseph C.

4 91 1623 .0000 .00 South Fork Gordon Creek PRIORITY DATE: 00/00/18
WATER USE(S): Castle Dale
Jorgensen, A. Gale

4 91 1631 .0000 .00 South Fork Gordon Creek PRIORITY DATE: 00/00/18
WATER USE(S): Castle Dale
Jorgensen, Theron Don

5 91 3716 .0000 .00 Mud Water Creek PRIORITY DATE: 00/00/18
WATER USE(S): Salt Lake City
State of Utah School & Institutional Tru 675 East 500 South, 5th Floor

5 91 3715 .0000 .00 Bob Bishop Canyon Creek PRIORITY DATE: 00/00/18
WATER USE(S): Salt Lake City
State of Utah School & Institutional Tru 675 East 500 South, 5th Floor

6 91 1181 .0000 .00 South Fork Gordon Creek PRIORITY DATE: 00/00/18
WATER USE(S): Castle Dale
Jorgensen, Ray

6 91 1607 .0000 .00 South Fork Gordon Creek PRIORITY DATE: 00/00/18
WATER USE(S):
Jorgensen, John L.

6 91 1615 .0000 .00 South Fork Gordon Creek PRIORITY DATE: 00/00/18
WATER USE(S): Castle Dale
Jorgensen, Joseph C.

6 91 1623 .0000 .00 South Fork Gordon Creek PRIORITY DATE: 00/00/18
WATER USE(S): Castle Dale
Jorgensen, A. Gale

6 91 1631 .0000 .00 South Fork Gordon Creek PRIORITY DATE: 00/00/18
WATER USE(S): Castle Dale
Jorgensen, Theron Don

7 91 3550 .0110 .00 Unnamed Spring PRIORITY DATE: 00/00/18
WATER USE(S): Castle Dale
Jorgensen, Ray

7 91 3545 .0110 .00 Unnamed Spring PRIORITY DATE: 00/00/18
WATER USE(S):

Jorgensen, John L. Castle Dale

7 91 3546 .0110 .00 Unnamed Spring
WATER USE(S): PRIORITY DATE: 00/00/18
Jorgensen, Joseph C. Castle Dale

7 91 3547 .0110 .00 Unnamed Spring
WATER USE(S): PRIORITY DATE: 00/00/18
Jorgensen, A. Gale Castle Dale

7 91 3548 .0110 .00 Unnamed Spring
WATER USE(S): PRIORITY DATE: 00/00/18
Jorgensen, Theron Don Castle Dale

8 91 3556 .0110 .00 Unnamed Spring
WATER USE(S): PRIORITY DATE: 00/00/18
Jorgensen, Ray Dale

8 91 3551 .0110 .00 Unnamed Spring
WATER USE(S): PRIORITY DATE: 00/00/18
Jorgensen, John L. Castle Dale

8 91 3552 .0110 .00 Unnamed Spring
WATER USE(S): PRIORITY DATE: 00/00/18
Jorgensen, Joseph C. Castle Dale

8 91 3553 .0110 .00 Unnamed Spring
WATER USE(S): PRIORITY DATE: 00/00/18
Jorgensen, A. Gale Castle Dale

8 91 3554 .0110 .00 Unnamed Spring
WATER USE(S): PRIORITY DATE: 00/00/18
Jorgensen, Theron Don Castle Dale

9 91 3716 .0000 .00 Mud Water Creek
WATER USE(S): PRIORITY DATE: 00/00/18
State of Utah School & Institutional Tru 675 East 500 South, 5th Floor Salt Lake City

Michael O. Leavitt
Governor
Kathleen Clarke
Executive Director
Lowell P. Braxton
Division Director

State of Utah

DEPARTMENT OF NATURAL RESOURCES
DIVISION OF OIL, GAS AND MINING

1594 West North Temple, Suite 1210
PO Box 145801
Salt Lake City, Utah 84114-5801
801-538-5340
801-359-3940 (Fax)
801-538-7223 (TDD)

August 23, 2001

Phillips Petroleum Company
PO Box 851
Price, UT 84501

Re: Seely 15-499 Well, 496' FSL, 2196' FWL, SE SW, Sec. 15, T. 14 South, R. 8 East, Carbon County, Utah

Gentlemen:

Pursuant to the provisions and requirements of Utah Code Ann.§ 40-6-1 *et seq.*, Utah Administrative Code R649-3-1 *et seq.*, and the attached Conditions of Approval, approval to drill the referenced well is granted.

This approval shall expire one year from the above date unless substantial and continuous operation is underway, or a request for extension is made prior to the expiration date. The API identification number assigned to this well is 43-007-30798.

Sincerely,

John R. Baza
Associate Director

dm
Enclosures
cc: Carbon County Assessor
Bureau of Land Management, Moab Field Office

Operator: Phillips Petroleum Company

Well Name & Number Seely 15-499

API Number: 43-007-30798

Lease: Private

Location: SE SW **Sec.** 15 **T.** 14 South **R.** 8 East

Conditions of Approval

1. General

   Compliance with the requirements of Utah Admin. R. 649-1 *et seq.*, the Oil and Gas Conservation General Rules, and the applicable terms and provisions of the approved Application for permit to drill.

2. Notification Requirements

   The operator is required to notify the Division of Oil, Gas and Mining of the following actions during drilling of this well:

   - 24 hours prior to cementing or testing casing
   - 24 hours prior to testing blowout prevention equipment
   - 24 hours prior to spudding the well
   - within 24 hours of any emergency changes made to the approved drilling program
   - prior to commencing operations to plug and abandon the well

   The following are Division of Oil, Gas and Mining contacts and their work telephone numbers (please leave a voice mail message if the person is not available to take the call):

   - Dan Jarvis at (801) 538-5338
   - Carol Daniels at (801) 538-5284 (spud)

3. Reporting Requirements

   All required reports, forms and submittals will be promptly filed with the Division, including but not limited to the Entity Action Form (Form 6), Report of Water Encountered During Drilling (Form 7), Weekly Progress Reports for drilling and completion operations, and Sundry Notices and Reports on Wells requesting approval of change of plans or other operational actions.

4. Compliance with the Conditions of Approval/Application for Permit to Drill outlined in the Statement of Basis. (Copy Attached)

PHILLIPS PETROLEUM COMPANY
6825 South 5300 West
P.O. Box 851
Price, UT 84501
TEL: (435) 613-9777 FAX: (435) 613-9782

August 16, 2001

Ms. Lisha Cordova
State of Utah
Division of Oil, Gas and Mining
1594 West North Temple, Suite 1210
SLC, Utah 84114-5801

RE: Surface Use Agreement for Jorgensen Property, T14S, R8E

Dear Ms. Cordova:

Enclosed is a copy of the Jorgensen Surface Use and Damage Agreement for the Seely wells in T14S, R8E. This agreement applies to the following wells: Seely 22-492, 22-501, 22-502, 22-50~~2~~3, 15-498, 15-499, 15-500. Please let me know if this format is acceptable or if you need anything else.

Thank you for your assistance.

Sincerely,

Jean Semborski

Jean Semborski
Permit Analyst

RECEIVED
AUG 23 2001
DIVISION OF
OIL, GAS AND MINING

Once Recorded, Please Return Original to
Deanna J. Walker
Phillips Petroleum Company
P.O. Box 105
Livermore, CO 80536

AMENDMENT TO
MEMORANDUM OF SURFACE USE AND DAMAGE AGREEMENT

This Amendment to Memorandum of Surface Use and Damage Agreement, which was effective as of the 23rd day of April, 2001, ("Amendment") is made and entered into effective as of the 16th day of July, 2001 ("Effective Date") by and between Justus Ray Jorgensen, whose address is 190 West 100 North, Castle Dale, Utah, 84513 and A. Gale Jorgensen, whose address is 351 East Main Street, Castle Dale, Utah, 84513, (collectively "Jorgensen"), and Phillips Petroleum Company, a Delaware Corporation, all subsidiary companies, and their successors and assigns, whose address is 4001 Penbrook, Odessa, Texas, 79762 ("Phillips").

It is the desire of Jorgensen and Phillips to correct the legal description of the Property described in Exhibit A of the Memorandum of Surface Use and Damage Agreement to accurately reflect the property Jorgensen owns the surface estate of or otherwise controls the surface rights in and to.

In consideration of $10.00 and other good and valuable consideration, the receipt and sufficiency of which is hereby acknowledged, Jorgensen and Phillips agree as follows:

Exhibit A of the Memorandum of Surface Use and Damage Agreement is replaced in its entirety with Exhibit A attached hereto and made a part hereof.

All other terms and provisions of the Memorandum of Surface Use and Damage Agreement effective as of the 23rd day of April, 2001 shall remain in full force and effect as written.

Signed as of the 6th day of ~~July~~ Aug, 2001 but this Amendment is effective as of the first date mentioned above.

JUSTUS RAY JORGENSEN

Justus Ray Jorgensen

A. GALE JORGENSEN

A. Gale Jorgensen

PHILLIPS PETROLEUM COMPANY

By: _____

Title: Attorney-in-Fact

State of Utah }
}
County of Emery }

I, the undersigned authority, a Notary Public in and for said County in said State, hereby certify that Judus Kay Jorgensen, whose name is signed to the foregoing instrument, and who is known to me, acknowledged before me on this day that, being informed of the contents of the instrument, _____, executed the same voluntarily.

Given under my hand and official seal, this the 6th day of Aug, 2001.

Kathy Vuksinick
Notary Public

My Commission Expires _____

NOTARY PUBLIC
Kathy Vuksinick
310 So. Main St., Ste. 308
Salt Lake City, Utah 84101
My Commission Expires
October 4, 2001
STATE OF UTAH

State of Utah }
}
County of Emery }

I, the undersigned authority, a Notary Public in and for said County in said State, hereby certify that A. Dale Jorgensen, whose name is signed to the foregoing instrument, and who is known to me, acknowledged before me on this day that, being informed of the contents of the instrument, _____, executed the same voluntarily.

Given under my hand and official seal, this the 6th day of Aug, 2001.

Kathy Vuksinick
Notary Public

My Commission Expires _____

NOTARY PUBLIC
Kathy Vuksinick
310 So. Main St., Ste. 308
Salt Lake City, Utah 84101
My Commission Expires
October 4, 2001
STATE OF UTAH

State of Texas }
}
County of Ector }

I, the undersigned authority, a Notary Public in and for said County in said State, hereby certify that Jon D. Baccus, whose name as Attorney-In-Fact of Phillips Petroleum Company, is signed to the foregoing instrument, and who is known to me, acknowledged before me on this day that, being informed of the contents of the instrument, he, as authorized agent and will full authority, executed the same voluntarily and as the act of said corporation.

Given under my hand and official seal, this the 13th day of August, 2001.

Susan Kay Elliott
Notary Public

My Commission Expires _____

SUSAN KAY ELLIOTT
Notary Public, State of Texas
My Commission Expires
February 28, 2005

EXHIBIT A

Section 15, Township 14 South, Range 8 East, Salt Lake Meridian, Carbon County, Utah:

The south half and the northeast quarter of Section 15, Township 14 South, Range 8 East, Salt Lake Meridian, 480 acres. SEELY 15-498, 15-499, 15-500

Section 16, Township 14 South, Range 8 East, Salt Lake Meridian, Carbon County, Utah:

The east half of the southeast quarter of Section 16, Township 14 South, Range 8 East, Salt Lake Meridian, 80 acres.

Section 20, Township 14 South, Range 8 East, Salt Lake Meridian, Carbon County, Utah:

The southeast quarter of the northeast quarter and the southwest quarter of the southeast quarter and the east half of the southeast quarter of Section 20, Township 14 South, Range 8 East, Salt Lake Meridian, 160 acres.

Section 21, Township 14 South, Range 8 East, Salt Lake Meridian, Carbon County, Utah:

The northeast quarter of the northwest quarter and the southwest quarter of the northwest quarter and the northwest quarter of the southwest quarter of Section 21, Township 14 South, Range 8 East, Salt Lake Meridian, 120 acres.

Section 22, Township 14 South, Range 8 East, Salt Lake Meridian, Carbon County, Utah:

All of Section 22, Township 14 South, Range 8 East, Salt Lake Meridian, 640 acres, 640 acres. SEELY 22-492, 22-501, 22-502, 22-503

FORM 9

STATE OF UTAH

DIVISION OF OIL, GAS AND MINING

CONFIDENTIAL

5. Lease Designation and Serial Number: Private	
6. If Indian, Allottee or Tribe Name: N/A	
7. Unit Agreement Name: Drunkards Wash UTU-67921X	
8. Well Name and Number: Seely 15-499	
9. API Well Number: 43-007-30798	
10. Field or Pool, or Wildcat: Drunkards Wash	

SUNDRY NOTICES AND REPORTS ON WELLS

Do not use this form for proposals to drill new wells, deepen existing wells, or to reenter plugged and abandoned wells. Use APPLICATION FOR PERMIT TO DRILL OR DEEPEN form for such proposals.

1. Type of Well: OIL☐ GAS☒ OTHER:

2. Name of Operator: ~~Conoco~~Phillips

3. Address and Telephone Number: 6825 S. 5300 W. P.O. Box 851 Price, Utah 84501 (435) 613-9777

4. Location of Well
Footages: 496' FSL, 2196' FWL
QQ, Sec., T., R., M.: SE/4 SW/4 SEC. 15, T14S, R08E, SLB & M
County: Carbon County
State: Utah

11. **CHECK APPROPRIATE BOXES TO INDICATE NATURE OF NOTICE, REPORT, OR OTHER DATA**

NOTICE OF INTENT
(Submit in Duplicate)

- ☐ Abandon
- ☐ Repair Casing
- ☐ Change of Plans
- ☐ Convert to Injection
- ☐ Fracture Treat or Acidize
- ☐ Multiple Completion
- ☐ Other
- ☐ New Construction
- ☐ Pull or Alter Casing
- ☐ Recomplete
- ☐ Reperforate
- ☐ Vent or Flare
- ☐ Water Shut-Off

Approximate date work will start

SUBSEQUENT REPORT
(Submit Original Form Only)

- ☐ Abandon *
- ☐ Repair Casing
- ☐ Change of Plans
- ☐ Convert to Injection
- ☐ Fracture Treat or Acidize
- ☒ Other APD Extension Request
- ☐ New Construction
- ☐ Pull or Alter Casing
- ☐ Reperforate
- ☐ Vent or Flare
- ☐ Water Shut-Off

Date of work completion

Report results of Multiple Completions and Recompletions to different reservoirs on WELL COMPLETION OR RECOMPLETION REPORT AND LOG form.

* Must be accompanied by a cement verification report.

12. DESCRIBE PROPOSED OR COMPLETED OPERATIONS (Clearly state all pertinent details, and give pertinent dates. If well is directionally drilled, give subsurface locations and measured and true vertical depths for all markers and zones pertinent to this work.)

Please be advised that ~~Conoco~~Phillips is requesting a one year extension on the permit expiration date for the Seely 15-499 well location. This well is located more than 460' from the boundary of the Drunkards Wash Federal Unit and from the boundary of any uncommitted tract within the unit and will not require administrative approval in accordance with Utah Administrative Code Rule R649-3-3.

RECEIVED

SEP 10 2002

DIVISION OF OIL, GAS AND MINING

COPY

CONFIDENTIAL

Approved by the Utah Division of Oil, Gas and Mining

Date: 09-12-02

By:

COPY SENT TO OPERATOR
Date: 9-12-02
Initials: CHD

13.

Name & Signature: Jean Semborski

Title: Permitting Analyst

Date: 9/5/02

(This space for state use only)

(4/94)

(See Instructions on Reverse Side)

ConocoPhillips

Divisions of Oil, Gas, and Mining
Attn: Mr. John Baza
1594 West North Temple,
Suite 1210, P. O. Box 145801
Salt Lake City, UT 84114-5801

Re: Notice of Address Change, Merger and Name Change
Address Change effective **December 2, 2002**
Merger and Name Change effective **December 31, 2002**

Gentlemen:

1. Effective December 2, 2002, Phillips Petroleum Company will close its Englewood, Colorado Rocky Mountain Region office. After that time, all correspondence, notices and invoice for Land related matters should be directed to the address(es) noted below. Note that until December 31, 2002, all properties in which Phillips held an interest will continue to be operated by Phillips Petroleum Company, a wholly-owned subsidiary of ConocoPhillips.

2. On December 31, 2002, Phillips Petroleum Company and Conoco Inc. will merge, and the surviving corporation will be renamed "ConocoPhillips Company".

In accordance with the notice provisions of the Operating Agreements and other agreements, if any, between our companies, please adjust your company/organization records, effective for address purposes as of December 2, 2002, and for company name purposes, as of January 1, 2003, to reflect the following information for addressing and delivery of notices, invoicing and payment, and communications with ConocoPhillips Company. This will also apply to Lease Sale notices and other lease-related correspondence and notifications.

U.S. Mail Address:

ConocoPhillips Company
P.O. Box 2197
Houston, Texas 77252
Attn: Chief Landman,
San Juan/Rockies

Physical Address & Overnight Delivery:

ConocoPhillips Company
550 Westlake Park Blvd.
Three Westlake Park
3WL, Room WL 9000
Houston, Texas 77079
Attn: Chief Landman,
San Juan/Rockies

All ballots and official notices/responses sent by facsimile transmission should be sent to the following contact:

Attn: Chief Landman,
San Juan/Rockies

Fax No.: 832-486-2688 or
832-486-2687

Please contact the undersigned immediately if you have any questions. This notice does not apply to royalty inquiries, joint interest billings, or revenue remittances. Please continue to use the same addresses you are currently using for these matters

Sincerely, William Rainbolt

RECEIVED
DEC 0 2 2002
DIVISION OF
OIL, GAS AND MINING

Division of Oil, Gas and Mining

OPERATOR CHANGE WORKSHEET

ROUTING
1. GLH
2. CDW
3. FILE

Change of Operator (Well Sold) — Designation of Agent/Operator

Operator Name Change — **X Merger**

The operator of the well(s) listed below has changed, effective: **12-31-02**

FROM: (Old Operator):	**TO:** (New Operator):
PHILLIPS PETROLEUM COMPANY	CONOCOPHILLIPS COMPANY
Address: 980 PLAZA OFFICE	Address: P O BOX 2197, WL3 4066
BARTLESVILLE, OK 74004	HOUSTON, TX 77252
Phone: 1-(918)-661-4415	Phone: 1-(832)-486-2329
Account No. N1475	Account No. N2335

CA No. **Unit:**

WELL(S)

NAME	SEC TWN RNG	API NO	ENTITY NO	LEASE TYPE	WELL TYPE	WELL STATUS
SEELY 15-498	15-14S-08E	43-007-30797	99999	FEE	GW	APD
SEELY 15-499	15-14S-08E	43-007-30798	99999	FEE	GW	APD
SEELY 15-500	15-14S-08E	43-007-30799	99999	FEE	GW	APD
SEELY 22-501	22-14S-08E	43-007-30800	13667	FEE	GW	P
SEELY 22-492	22-14S-08E	43-007-30796	99999	FEE	GW	APD
SEELY 22-502	22-14S-08E	43-007-30801	99999	FEE	GW	APD
SEELY 22-503	22-14S-08E	43-007-30802	99999	FEE	GW	APD
USA 01-402	01-14S-09E	43-007-30629	13669	FEDERAL	GW	P
USA 01-504	01-14S-09E	43-007-30846	99999	FEDERAL	GW	NEW
USA 06-437	06-14S-09E	43-007-30831	13576	FEDERAL	GW	P
USA 06-488	06-14S-09E	43-007-30832	13668	FEDERAL	GW	P
USA 06-489	06-14S-09E	43-007-30833	13603	FEDERAL	GW	P
USA 12-536	12-14S-09E	43-007-30841	13670	FEDERAL	GW	P
USA 12-537	12-14S-09E	43-007-30842	13689	FEDERAL	GW	DRL
USA 12-538	12-14S-09E	43-007-30843	13690	FEDERAL	GW	DRL
USA 34-518	34-14S-09E	43-007-30803	99999	FEDERAL	GW	APD
UTAH 19-533	19-14S-10E	43-007-30891	99999	STATE	GW	APD
SCHMIDT 29-531	29-14S-10E	43-007-30863	99999	FEE	GW	APD
MCKENDRICK 29-548	29-14S-10E	43-007-30864	99999	FEE	GW	APD
COTNER 29-549	29-14S-10E	43-007-30865	99999	FEE	GW	APD

OPERATOR CHANGES DOCUMENTATION

Enter date after each listed item is completed

1. (R649-8-10) Sundry or legal documentation was received from the **FORMER** operator on: 01/08/2003
2. (R649-8-10) Sundry or legal documentation was received from the **NEW** operator on: 01/08/2003
3. The new company has been checked through the **Department of Commerce, Division of Corporations Database on:** 02/03/2003
4. Is the new operator registered in the State of Utah: YES Business Number: 562960-0143
5. If **NO**, the operator was contacted contacted on: _____

6. (R649-9-2)Waste Management Plan has been received on: IN PLACE

7. **Federal and Indian Lease Wells:** The BLM and or the BIA has approved the merger, name change, or operator change for all wells listed on Federal or Indian leases on: 01/14/2003

8. **Federal and Indian Units:**
The BLM or BIA has approved the successor of unit operator for wells listed on: 01/14/2003

9. **Federal and Indian Communization Agreements ("CA"):**
The BLM or BIA has approved the operator for all wells listed within a CA on: 01/14/2003

10. **Underground Injection Control ("UIC")** The Division has approved UIC Form 5, **Transfer of Authority to Inject,** for the enhanced/secondary recovery unit/project for the water disposal well(s) listed on: N/A

DATA ENTRY:

1. Changes entered in the **Oil and Gas Database on:** 02/12/2003
2. Changes have been entered on the **Monthly Operator Change Spread Sheet on:** 02/12/2003
3. Bond information entered in RBDMS on: N/A
4. Fee wells attached to bond in RBDMS on: N/A

STATE WELL(S) BOND VERIFICATION:

1. State well(s) covered by Bond Number: 8140-60-24

FEDERAL WELL(S) BOND VERIFICATION:

1. Federal well(s) covered by Bond Number: 8015-16-69

INDIAN WELL(S) BOND VERIFICATION:

1. Indian well(s) covered by Bond Number: N/A

FEE WELL(S) BOND VERIFICATION:

1. (R649-3-1) The **NEW** operator of any fee well(s) listed covered by Bond Number 6196922
2. The **FORMER** operator has requested a release of liability from their bond on: N/A
The Division sent response by letter on: N/A

LEASE INTEREST OWNER NOTIFICATION:

3. (R649-2-10) The **FORMER** operator of the fee wells has been contacted and informed by a letter from the Division of their responsibility to notify all interest owners of this change on: N/A

COMMENTS:

United States Department of the Interior

BUREAU OF LAND MANAGEMENT
Eastern States Office
7450 Boston Boulevard
Springfield, Virginia 22153

IN REPLY REFER TO
3106.8(932.34)WF

January 16, 2003

NOTICE

ConocoPhillips Company P.O. Box 7500 Bartlesville, Oklahoma 74005	: : :	Oil & Gas Leases

Merger/Name Change Recognized

Acceptable evidence was received in this office on January 14, 2003, concerning the change of name of Phillips Petroleum Company to **ConocoPhillips Company** and the merger of **Conoco Incorporated** into **ConocoPhillips Company** on Federal oil and gas leases, with **ConocoPhillips Company being the surviving entity.**

The Secretary of the State of Delaware certified the effective date of this merger effective December 31, 2002.

The oil and gas lease files identified on the enclosed exhibit have been noted to the merger. The exhibit was compiled from a list of leases obtained from your list of leases. Eastern States has not abstracted the lease files to determine if the entities affected by this merger hold an interest in the leases identified nor have we attempted to identify leases where the entities are the operator on the ground maintaining no vested record title or operating rights interest. We are notifying the Minerals Management Service and all applicable Bureau of Land Management offices of this merger and name change by a copy of this notice. If additional documentation for changes of operator are required by our Field Offices, you will be contacted by them.

If you identify other leases in which the merging entity maintain an interest, please contact this office and we will appropriately document those files with a copy of this Notice.

By Operation of law the name of the principal on Nationwide Oil and Gas Bond held by Conoco Incorporated (ES0085) has been changed to ConocoPhillips Company.

If you have any questions, please contact Bill Forbes at 703-440-1536.

S/ Wilbert B. Forbes

Wilbert B. Forbes
Land Law Examiner
Branch of Use Authorization
Division of Resources Planning, Use
and Protection

bc: JFO, BLM State Offices, MMS, ES RF, 930 RF, ES-932:
Bforbes:wbf:01/16/03:440-1536/ConocoPhillips Co

STATE OF UTAH
DEPARTMENT OF NATURAL RESOURCES
DIVISION OF OIL, GAS AND MINING

FORM 9

SUNDRY NOTICES AND REPORTS ON WELLS

Do not use this form for proposals to drill new wells, significantly deepen existing wells below current bottom-hole depth, reenter plugged wells, or to drill horizontal laterals. Use APPLICATION FOR PERMIT TO DRILL form for such proposals.

5. LEASE DESIGNATION AND SERIAL NUMBER:

6. IF INDIAN, ALLOTTEE OR TRIBE NAME:

7. UNIT or CA AGREEMENT NAME:

1. TYPE OF WELL: OIL WELL ☐ GAS WELL ☐ OTHER All

8. WELL NAME and NUMBER: See Attached List

2. NAME OF OPERATOR: Phillips Petroleum Company

9. API NUMBER: See List

3. ADDRESS OF OPERATOR: 980 Plaza Office CITY Bartlesville STATE OK ZIP 74004

PHONE NUMBER: (918) 661-4415

10. FIELD AND POOL, OR WILDCAT:

4. LOCATION OF WELL

FOOTAGES AT SURFACE: See Attached List

COUNTY:

QTR/QTR, SECTION, TOWNSHIP, RANGE, MERIDIAN:

STATE: UTAH

11. CHECK APPROPRIATE BOXES TO INDICATE NATURE OF NOTICE, REPORT, OR OTHER DATA

TYPE OF SUBMISSION	TYPE OF ACTION		
☐ NOTICE OF INTENT (Submit in Duplicate)	☐ ACIDIZE	☐ DEEPEN	☐ REPERFORATE CURRENT FORMATION
Approximate date work will start:	☐ ALTER CASING	☐ FRACTURE TREAT	☐ SIDETRACK TO REPAIR WELL
	☐ CASING REPAIR	☐ NEW CONSTRUCTION	☐ TEMPORARILY ABANDON
	☐ CHANGE TO PREVIOUS PLANS	☑ OPERATOR CHANGE	☐ TUBING REPAIR
	☐ CHANGE TUBING	☐ PLUG AND ABANDON	☐ VENT OR FLARE
☑ SUBSEQUENT REPORT (Submit Original Form Only)	☐ CHANGE WELL NAME	☐ PLUG BACK	☐ WATER DISPOSAL
Date of work completion:	☐ CHANGE WELL STATUS	☐ PRODUCTION (START/RESUME)	☐ WATER SHUT-OFF
	☐ COMMINGLE PRODUCING FORMATIONS	☐ RECLAMATION OF WELL SITE	☐ OTHER:
	☐ CONVERT WELL TYPE	☐ RECOMPLETE - DIFFERENT FORMATION	

12. DESCRIBE PROPOSED OR COMPLETED OPERATIONS. Clearly show all pertinent details including dates, depths, volumes, etc.

Conoco Inc. was merged into Phillips Petroleum Company, the surviving corporation, on December 31, 2002. In connection with this merger and effective on the same date, the name of the surviving corporation was changed to "ConocoPhillips Company". We are requesting that a new Operator Number be assigned to ConocoPhillips Company.

Please send production reporting forms to Herb Henderson at ConocoPhillips Company, 315 S. Johnstone, 980 Plaza Office, Bartlesville, OK 74004. Herb's phone number is 918-661-4415.

Current Operator
Phillips Petroleum Company
Steve de Albuquerque

New Operator
ConocoPhillips Company
Yolanda Perez

RECEIVED
JAN 0 8 2003
DIV. OF OIL, GAS & MINING

NAME (PLEASE PRINT) Yolanda Perez TITLE Sr. Regulatory Analyst

SIGNATURE Yolanda Perez DATE 12/30/2002

(This space for State use only)

(5/2000) (See Instructions on Reverse Side)

ConocoPhillips

SECRETARY'S CERTIFICATE

I, the undersigned, Jennifer M. Garcia, Assistant Secretary of ConocoPhillips Company, formerly Phillips Petroleum Company, organized and existing under and by virtue of the laws of the State of Delaware (the "Corporation"), hereby certify that:

1. As Assistant Secretary I am authorized to execute this certificate on behalf of the Corporation.

2. The attached photocopy of the Certificate of Amendment to the Restated Certificate of Incorporation of Phillips Petroleum Company (to be renamed ConocoPhillips Company) is a true and correct copy as filed in the office of the Secretary of State of Delaware on the 12th day of December 2002, with an effective date of January 1, 2003 and such Certificate of Amendment has not been modified, amended, rescinded or revoked and is in full force and effect as of the date hereof.

3. The attached photocopy of the Certificate of Merger of Conoco Inc. with and into ConocoPhillips Company is a true and correct copy as filed in the office of the Secretary of State of Delaware on the 12th day of December 2002, with an effective date of December 31, 2002 and such Certificate of Merger has not been modified, amended, rescinded or revoked and is in full force and effect as of the date hereof.

IN WITNESS WHEREOF, I have hereunto set my hand as Assistant Secretary and affixed the corporate seal of the Corporation this 7th day of January 2003.

Assistant Secretary
ConocoPhillips Company

STATE OF TEXAS §
§
COUNTY OF HARRIS §

This instrument was acknowledged before me on January 7, 2003, by Jennifer M. Garcia, Assistant Secretary of ConocoPhillips Company, a Delaware corporation, on behalf of said Corporation.

SUSAN F. SHORT NOTARY PUBLIC STATE OF TEXAS EXPIRES 11-12-2005

Notary Public

RECEIVED
JAN 0 8 2003
DIV. OF OIL, GAS & MINING

Delaware

The First State

I, HARRIET SMITH WINDSOR, SECRETARY OF STATE OF THE STATE OF DELAWARE, DO HEREBY CERTIFY THE ATTACHED IS A TRUE AND CORRECT COPY OF THE CERTIFICATE OF AMENDMENT OF "PHILLIPS PETROLEUM COMPANY", CHANGING ITS NAME FROM "PHILLIPS PETROLEUM COMPANY" TO "CONOCOPHILLIPS COMPANY", FILED IN THIS OFFICE ON THE TWELFTH DAY OF DECEMBER, A.D. 2002, AT 1:41 O'CLOCK P.M.

AND I DO HEREBY FURTHER CERTIFY THAT THE EFFECTIVE DATE OF THE AFORESAID CERTIFICATE OF AMENDMENT IS THE THIRTY-FIRST DAY OF DECEMBER, A.D. 2002, AT 11 O'CLOCK P.M.

RECEIVED
JAN 0 8 2003
DIV. OF OIL, GAS & MINING

Harriet Smith Windsor

Harriet Smith Windsor, Secretary of State

0064324 8100

AUTHENTICATION: 2183360

030002793

DATE: 01-02-03

STATE OF DELAWARE
SECRETARY OF STATE
DIVISION OF CORPORATIONS
FILED 01:41 PM 12/12/2002
020763238 - 0064324

CERTIFICATE OF AMENDMENT

to the

RESTATED CERTIFICATE OF INCORPORATION

of

PHILLIPS PETROLEUM COMPANY
(to be renamed ConocoPhillips Company)

Phillips Petroleum Company ("Phillips"), a corporation organized and existing under the General Corporation Law of the State of Delaware (the "DGCL"), hereby certifies that:

1. The amendments to Phillips' Restated Certificate of Incorporation set forth below were duly adopted in accordance with the provisions of Section 242 of the DGCL and have been consented to in writing by the sole stockholder of Phillips in accordance with Section 228 of the DGCL.

2. Phillips' Restated Certificate of Incorporation is hereby amended by deleting Article I thereof and replacing in lieu thereof a new Article I reading in its entirety as follows:

"The name of the corporation (which is hereinafter referred to as the "Corporation") is ConocoPhillips Company."

3. Phillips' Restated Certificate of Incorporation is hereby amended by deleting Section 1 of Article IV thereof and replacing in lieu thereof a new Section 1 reading in its entirety as follows:

"Section 1. The Corporation shall be authorized to issue 2,100 shares of capital stock, of which 2,100 shares shall be shares of Common Stock, $.01 par value ("Common Stock")."

4. Pursuant to Section 103(d) of the DGCL, this amendment will become effective at 11:00 p.m., Eastern time, on December 31, 2002.

RECEIVED
JAN 0 8 2003
DIV. OF OIL, GAS & MINING

IN WITNESS WHEREOF, Phillips has caused this certificate to be executed this 12th day of December, 2002.

PHILLIPS PETROLEUM COMPANY

By: _____
Name: Rick A. Harrington
Title: Senior Vice President, Legal, and General Counsel

HOU03:884504.1

RECEIVED
JAN 0 8 2003
DIV. OF OIL, GAS & MINING

Delaware

The First State

I, HARRIET SMITH WINDSOR, SECRETARY OF STATE OF THE STATE OF DELAWARE, DO HEREBY CERTIFY THE ATTACHED IS A TRUE AND CORRECT COPY OF THE CERTIFICATE OF MERGER, WHICH MERGES:

"CONOCO INC.", A DELAWARE CORPORATION,

WITH AND INTO "CONOCOPHILLIPS COMPANY" UNDER THE NAME OF "CONOCOPHILLIPS COMPANY", A CORPORATION ORGANIZED AND EXISTING UNDER THE LAWS OF THE STATE OF DELAWARE, AS RECEIVED AND FILED IN THIS OFFICE THE TWELFTH DAY OF DECEMBER, A.D. 2002, AT 1:44 O'CLOCK P.M.

AND I DO HEREBY FURTHER CERTIFY THAT THE EFFECTIVE DATE OF THE AFORESAID CERTIFICATE OF MERGER IS THE THIRTY-FIRST DAY OF DECEMBER, A.D. 2002, AT 11:59 O'CLOCK P.M.

RECEIVED
JAN 0 8 2003
DIV. OF OIL, GAS & MINING

Harriet Smith Windsor

Harriet Smith Windsor, Secretary of State

0064324 8100M

AUTHENTICATION: 2183370

030002793

DATE: 01-02-03

STATE OF DELAWARE
SECRETARY OF STATE
DIVISION OF CORPORATIONS
FILED 01:44 PM 12/12/2002
020763253 - 0064324

CERTIFICATE OF MERGER

of

Conoco Inc.
(a Delaware corporation)

with and into

ConocoPhillips Company
(a Delaware corporation)

Phillips Petroleum Company, a Delaware corporation to be renamed ConocoPhillips Company prior to the effective time of this certificate of merger (the "Surviving Corporation"), in compliance with the requirements of the General Corporation Law of the State of Delaware (the "DGCL") and desiring to effect a merger of Conoco Inc., a Delaware corporation formerly incorporated under the name Du Pont Holdings, Inc. (the "Merging Corporation," and together with the Surviving Corporation, the "Constituent Corporations"), with and into the Surviving Corporation, and acting by its duly authorized officer, DOES HEREBY CERTIFY that:

First: As of the date hereof, the name and state of incorporation of each of the Constituent Corporations of the merger are as follows:

NAME	STATE OF INCORPORATION
PHILLIPS PETROLEUM COMPANY	Delaware
CONOCO INC.	Delaware

Second: An agreement and plan of merger has been approved, adopted, certified, executed and acknowledged by each of the Constituent Corporations in accordance with the requirements of Section 251 of the DGCL;

Third: The name of the Surviving Corporation will be ConocoPhillips Company;

Fourth: The Certificate of Incorporation of ConocoPhillips Company immediately prior to the merger shall be the Certificate of Incorporation of the Surviving Corporation until such time as it may be amended in accordance with applicable law and the provisions thereof;

Fifth: The executed agreement and plan of merger is on file at an office of the Surviving Corporation, the address of which is 600 North Dairy Ashford, Houston, Texas 77079;

RECEIVED
JAN 0 8 2003
DIV. OF OIL, GAS & MINING

Sixth: A copy of the agreement and plan of merger will be furnished by the Surviving Corporation, on request and without cost, to any stockholder of any Constituent Corporation; and

Seventh: Pursuant to Section 103(d) of the DGCL, this certificate of merger will become effective at 11:59 p.m., Eastern time, on December 31, 2002.

Dated: December 12, 2002

PHILLIPS PETROLEUM COMPANY
(a Delaware corporation)

By: _____
Name: Rick A. Harrington
Title: Senior Vice President, Legal, and General Counsel

RECEIVED
JAN 0 8 2003
DIV. OF OIL, GAS & MINING

STATE OF UTAH
DEPARTMENT OF COMMERCE
REGISTRATION

CONOCOPHILLIPS COMPANY

EFFECTIVE
06/14/1946

EXPIRATION
*RENEWAL

REFERENCE NUMBER(S), CLASSIFICATION(S) & DETAIL(S)

Corporation - Foreign - Profit
562960-0143

UNITED STATES CORP CO
CONOCOPHILLIPS COMPANY
GATEWAY TOWER EAST STE 900
10 EAST SOUTH TEMPLE
SLC UT 84133

RECEIVED
JAN 0 8 2003
DIV. OF OIL, GAS & MINING

STATE OF UTAH
DEPARTMENT OF COMMERCE
DIVISION OF CORPORATIONS & COMMERCIAL CODE

REGISTRATION

EFFECTIVE DATE: 06/14/1946

EXPIRATION DATE: *RENEWAL

ISSUED TO: CONOCOPHILLIPS COMPANY

REFERENCE NUMBER(S), CLASSIFICATION(S) & DETAIL(S)
562960-0143 **Corporation - Foreign - Profit**
***RENEWAL**
You will need to renew your registration each anniversary date of the effective date.
Exceptions: DBAs and Business Trusts renew every three (3) years from the effective date.

Utah Well List as of 12/26/02

API Well Number	Well Name	Well Type	Well Status	Sec	Twpn	Twpd	Rngn	Rngd
43-007-30887-00-00	ANDREEN 32-529	Gas Well	APD	32	14	S	10	E
43-007-30865-00-00	COTNER 29-549	Gas Well	APD	29	14	S	10	E
43-007-30837-00-00	DALLIN 32-615	Gas Well	APD	32	13	S	9	E
43-047-34551-00-00	FED 43-24-3 #1	Gas Well	APD	24	10	S	17	E
43-047-33982-00-00	FEDERAL 12-17 #1	Gas Well	APD	17	10	S	18	E
43-047-34471-00-00	FEDERAL 12-29-7 1	Gas Well	APD	29	9	S	19	E
43-047-34472-00-00	FEDERAL 31-31-6 1	Gas Well	APD	31	9	S	19	E
43-007-30864-00-00	MCKENDRICK 29-548	Gas Well	APD	29	14	S	10	E
43-015-30512-00-00	PPCO 19-379	Gas Well	APD	19	16	S	9	E
43-015-30515-00-00	PPCO 24-562	Gas Well	APD	24	16	S	8	E
43-015-30548-00-00	PPCO 30-605	Gas Well	APD	30	16	S	9	E
43-007-30888-00-00	PRICE 32-438	Gas Well	APD	32	14	S	10	E
43-007-30813-00-00	RITZAKIS 33-514	Gas Well	APD	33	13	S	9	E
43-007-30766-00-00	RITZAKIS 33-516	Gas Well	APD	33	13	S	9	E
43-007-30838-00-00	ROWLEY 32-616	Gas Well	APD	32	13	S	9	E
43-007-30863-00-00	SCHMIDT 29-531	Gas Well	APD	29	14	S	10	E
43-007-30797-00-00	SEELY 15-498	Gas Well	APD	15	14	S	8	E
43-007-30798-00-00	SEELY 15-499	Gas Well	APD	15	14	S	8	E
43-007-30799-00-00	SEELY 15-500	Gas Well	APD	15	14	S	8	E
43-007-30796-00-00	SEELY 22-492	Gas Well	APD	22	14	S	8	E
43-007-30801-00-00	SEELY 22-502	Gas Well	APD	22	14	S	8	E
43-007-30802-00-00	SEELY 22-503	Gas Well	APD	22	14	S	8	E
43-007-30711-00-00	USA 09-452	Gas Well	APD	9	15	S	8	E
43-015-30351-00-00	USA 11-313	Gas Well	APD	11	16	S	9	E
43-015-30398-00-00	USA 12-385	Gas Well	APD	12	16	S	9	E
43-015-30409-00-00	USA 12-426	Gas Well	APD	12	16	S	9	E
43-007-30805-00-00	USA 14-490	Gas Well	APD	14	14	S	8	E
43-007-30806-00-00	USA 14-491	Gas Well	APD	14	14	S	8	E
43-007-30676-00-00	USA 15-421	Gas Well	APD	15	15	S	8	E
43-015-30417-00-00	USA 21-427	Gas Well	APD	21	16	S	9	E
43-015-30416-00-00	USA 21-428	Gas Well	APD	21	16	S	9	E
43-015-30415-00-00	USA 21-429	Gas Well	APD	21	16	S	9	E
43-007-30515-00-00	USA 31-309	Gas Well	APD	31	15	S	10	E
43-007-30835-00-00	USA 33-515	Gas Well	APD	33	13	S	9	E
43-007-30836-00-00	USA 33-624	Gas Well	APD	33	13	S	9	E
43-007-30803-00-00	USA 34-518	Gas Well	APD	34	14	S	8	E
43-007-30478-00-00	UTAH 05-224	Gas Well	APD	5	15	S	9	E
43-015-30411-00-00	UTAH 16-365	Gas Well	APD	16	16	S	9	E
43-015-30412-00-00	UTAH 16-366	Gas Well	APD	16	16	S	9	E
43-015-30413-00-00	UTAH 16-430	Gas Well	APD	16	16	S	9	E
43-015-30299-00-00	UTAH 18-374	Gas Well	APD	18	16	S	9	E
43-015-30420-00-00	UTAH 19-377	Gas Well	APD	19	16	S	9	E
43-015-30492-00-00	UTAH 19-378	Gas Well	APD	19	16	S	9	E
43-007-30891-00-00	UTAH 19-533	Gas Well	APD	19	14	S	10	E
43-015-30414-00-00	UTAH 20-381	Gas Well	APD	20	16	S	9	E
43-015-30421-00-00	UTAH 20-382	Gas Well	APD	20	16	S	9	E
43-015-30518-00-00	UTAH 25-576	Gas Well	APD	25	16	S	8	E
43-015-30539-00-00	UTAH 25-578	Gas Well	APD	25	16	S	8	E
43-015-30540-00-00	UTAH 25-579	Gas Well	APD	25	16	S	8	E
43-007-30817-00-00	UTAH 25-618	Gas Well	APD	25	13	S	9	E
43-015-30543-00-00	UTAH 26-582	Gas Well	APD	26	16	S	8	E
43-015-30547-00-00	UTAH 29-608	Gas Well	APD	29	16	S	9	E
43-007-30889-00-00	UTAH 32-128	Gas Well	APD	32	14	S	10	E
43-007-30814-00-00	UTAH 35-506	Gas Well	APD	35	13	S	9	E

Utah Well List as of 12/26/02

API Well Number	Well Name	Well Type	Well Status	Sec	Twpn	Twpd	Rngn	Rngd
43-047-33750-00-00	FEDERAL 34-29	Gas Well	P	29	9	S	19	E
43-007-30782-00-00	GAROFOLA 26-482	Gas Well	P	26	15	S	8	E
43-007-30335-00-00	GIACOLETTO 11-113	Gas Well	P	11	14	S	9	E
43-007-30407-00-00	GIACOLETTO 13-120	Gas Well	P	13	14	S	9	E
43-007-30345-00-00	GIACOLETTO 14-121	Gas Well	P	14	14	S	9	E
43-007-30487-00-00	HELPER & ASSOC 07-307	Gas Well	P	7	15	S	9	E
43-007-30459-00-00	HELPER & ASSOC 18-236	Gas Well	P	18	15	S	9	E
43-007-30720-00-00	HELPER & ASSOC 18-308	Gas Well	P	18	15	S	9	E
43-007-30412-00-00	HELPER & ASSOC 8-232	Gas Well	P	8	15	S	9	E
43-007-30258-00-00	HELPER & ASSOCIATES 7-84	Gas Well	P	7	15	S	9	E
43-007-30588-00-00	JENSEN 16-132	Gas Well	P	16	15	S	10	E
43-007-30420-00-00	KAKATSIDES 31-197	Gas Well	P	31	14	S	9	E
43-007-30296-00-00	LDS 17-133	Gas Well	P	17	15	S	10	E
43-007-30323-00-00	PAAR 16-146	Gas Well	P	16	14	S	9	E
43-047-34286-00-00	PETES WASH 23-12 #1	Gas Well	P	12	10	S	17	E
43-007-30748-00-00	PIERUCCI 25-461	Gas Well	P	25	15	S	8	E
43-007-30749-00-00	PIERUCCI 25-462	Gas Well	P	25	15	S	8	E
43-007-30754-00-00	PIERUCCI 26-463	Gas Well	P	26	15	S	8	E
43-007-30755-00-00	PIERUCCI 26-464	Gas Well	P	26	15	S	8	E
43-007-30745-00-00	PIERUCCI 26-481	Gas Well	P	26	15	S	8	E
43-007-30117-00-00	PINNACLE PEAK 19-171	Gas Well	P	19	14	S	9	E
43-007-30845-00-00	PMC 10-526	Gas Well	P	10	15	S	8	E
43-007-30282-00-00	POWELL 19-104	Gas Well	P	19	15	S	10	E
43-007-30283-00-00	POWELL 19-105	Gas Well	P	19	15	S	10	E
43-007-30346-00-00	POWELL 30-173	Gas Well	P	30	15	S	10	E
43-015-30279-00-00	PPCO 10-557	Gas Well	P	10	16	S	8	E
43-015-30494-00-00	PPCO 15-555	Gas Well	P	15	16	S	8	E
43-007-30211-00-00	PRETTYMAN 10-15-34	Gas Well	P	10	14	S	9	E
43-007-30340-00-00	PRETTYMAN 11-114	Gas Well	P	11	14	S	9	E
43-007-30653-00-00	RGC 21-331	Gas Well	P	21	15	S	9	E
43-007-30743-00-00	RGC 21-332	Gas Well	P	21	15	S	9	E
43-007-30747-00-00	RGC 25-460	Gas Well	P	25	15	S	8	E
43-007-30559-00-00	RGC 28-318	Gas Well	P	28	15	S	9	E
43-007-30518-00-00	RGC 28-319	Gas Well	P	28	15	S	9	E
43-007-30509-00-00	RITZAKIS 03-408	Gas Well	P	3	14	S	9	E
43-007-30473-00-00	RITZAKIS 5-304	Gas Well	P	5	14	S	9	E
43-007-30474-00-00	RITZAKIS 5-305	Gas Well	P	5	14	S	9	E
43-007-30475-00-00	RITZAKIS 8-298	Gas Well	P	8	14	S	9	E
43-007-30479-00-00	RITZAKIS 8-299	Gas Well	P	8	14	S	9	E
43-007-30476-00-00	RITZAKIS 8-300	Gas Well	P	8	14	S	9	E
43-007-30374-00-00	ROBERTSON 32-127	Gas Well	P	32	14	S	10	E
43-007-30610-00-00	SAMPINOS 16-131	Gas Well	P	16	15	S	10	E
43-007-30723-00-00	SAMPINOS 16-454	Gas Well	P	16	15	S	10	E
43-007-30765-00-00	SAMPINOS 16-521	Gas Well	P	16	15	S	10	E
43-007-30800-00-00	SEELY 22-501	Gas Well	P	22	14	S	8	E
43-007-30130-00-00	ST OF UT 25-9-1	Gas Well	P	25	14	S	9	E
43-007-30142-00-00	ST OF UT 36-3-4	Gas Well	P	36	14	S	9	E
43-007-30116-00-00	STELLA-HAMAKER 10-174	Gas Well	P	10	15	S	8	E
43-007-30746-00-00	TABOR 23-468	Gas Well	P	23	15	S	8	E
43-007-30319-00-00	TELONIS 15-142	Gas Well	P	15	14	S	9	E
43-007-30322-00-00	TELONIS 16-145	Gas Well	P	16	14	S	9	E
43-007-30300-00-00	TELONIS 19-150	Gas Well	P	19	14	S	9	E
43-007-30299-00-00	TELONIS 19-151	Gas Well	P	19	14	S	9	E
43-007-30327-00-00	TELONIS 20-152	Gas Well	P	20	14	S	9	E

Utah Well List as of 12/26/02

API Well Number	Well Name	Well Type	Well Status	Sec	Twpn	Twpd	Rngn	Rngd
43-007-30631-00-00	USA 13-419	Gas Well	P	13	15	S	8	E
43-007-30707-00-00	USA 13-447	Gas Well	P	13	14	S	8	E
43-007-30706-00-00	USA 13-470	Gas Well	P	13	14	S	8	E
43-007-30789-00-00	USA 13-474	Gas Well	P	13	14	S	8	E
43-007-30790-00-00	USA 13-475	Gas Well	P	13	14	S	8	E
43-007-30568-00-00	USA 13-91	Gas Well	P	13	14	S	9	E
43-007-30404-00-00	USA 14-122	Gas Well	P	14	14	S	9	E
43-015-30418-00-00	USA 1-425	Gas Well	P	1	16	S	9	E
43-007-30579-00-00	USA 14-325	Gas Well	P	14	15	S	8	E
43-007-30634-00-00	USA 14-386	Gas Well	P	14	15	S	8	E
43-007-30646-00-00	USA 14-416	Gas Well	P	14	15	S	8	E
43-007-30647-00-00	USA 14-417	Gas Well	P	14	15	S	8	E
43-007-30791-00-00	USA 14-476	Gas Well	P	14	14	S	8	E
43-007-30792-00-00	USA 14-477	Gas Well	P	14	14	S	8	E
43-007-30529-00-00	USA 14-74	Gas Well	P	14	14	S	9	E
43-007-30263-00-00	USA 14-75	Gas Well	P	14	14	S	9	E
43-007-30450-00-00	USA 15-176	Gas Well	P	15	14	S	9	E
43-007-30423-00-00	USA 15-177	Gas Well	P	15	14	S	9	E
43-007-30690-00-00	USA 15-420	Gas Well	P	15	15	S	8	E
43-007-30691-00-00	USA 15-422	Gas Well	P	15	15	S	8	E
43-007-30264-00-00	USA 15-88	Gas Well	P	15	14	S	9	E
43-007-30422-00-00	USA 17-179	Gas Well	P	17	14	S	9	E
43-007-30622-00-00	USA 17-180A	Gas Well	P	17	14	S	9	E
43-007-30618-00-00	USA 18-181	Gas Well	P	18	14	S	9	E
43-007-30417-00-00	USA 18-182	Gas Well	P	18	14	S	9	E
43-007-30619-00-00	USA 18-435	Gas Well	P	18	14	S	9	E
43-007-30393-00-00	USA 19-222	Gas Well	P	19	15	S	10	E
43-007-30392-00-00	USA 19-73	Gas Well	P	19	15	S	10	E
43-007-30448-00-00	USA 20-287	Gas Well	P	20	15	S	10	E
43-007-30451-00-00	USA 20-288	Gas Well	P	20	15	S	10	E
43-007-30590-00-00	USA 20-398	Gas Well	P	20	15	S	10	E
43-007-30591-00-00	USA 20-399	Gas Well	P	20	15	S	10	E
43-007-30424-00-00	USA 21-184	Gas Well	P	21	14	S	9	E
43-007-30425-00-00	USA 21-35	Gas Well	P	21	14	S	9	E
43-007-30426-00-00	USA 22-185	Gas Well	P	22	14	S	9	E
43-007-30477-00-00	USA 22-186	Gas Well	P	22	14	S	9	E
43-007-30700-00-00	USA 22-466	Gas Well	P	22	15	S	8	E
43-007-30611-00-00	USA 23-423	Gas Well	P	23	14	S	8	E
43-007-30650-00-00	USA 23-445	Gas Well	P	23	15	S	8	E
43-007-30704-00-00	USA 23-451	Gas Well	P	23	15	S	8	E
43-007-30503-00-00	USA 23-467	Gas Well	P	23	15	S	8	E
43-007-30793-00-00	USA 23-478	Gas Well	P	23	14	S	8	E
43-007-30794-00-00	USA 23-479	Gas Well	P	23	14	S	8	E
43-007-30795-00-00	USA 23-480	Gas Well	P	23	14	S	8	E
43-007-30469-00-00	USA 24-183	Gas Well	P	24	14	S	8	E
43-007-30612-00-00	USA 24-387	Gas Well	P	24	14	S	8	E
43-007-30613-00-00	USA 24-388	Gas Well	P	24	14	S	8	E
43-007-30651-00-00	USA 24-443	Gas Well	P	24	15	S	8	E
43-007-30648-00-00	USA 24-444	Gas Well	P	24	15	S	8	E
43-007-30708-00-00	USA 24-446	Gas Well	P	24	14	S	8	E
43-007-30652-00-00	USA 24-448	Gas Well	P	24	15	S	8	E
43-007-30705-00-00	USA 24-449	Gas Well	P	24	15	S	8	E
43-007-30505-00-00	USA 25-459	Gas Well	P	25	15	S	8	E
43-007-30614-00-00	USA 26-393	Gas Well	P	26	14	S	8	E

Utah Well List as of 12/26/02

API Well Number	Well Name	Well Type	Well Status	Sec	Twpn	Twpd	Rngn	Rngd
43-007-30430-00-00	UTAH 06-223	Gas Well	P	6	15	S	9	E
43-007-30562-00-00	UTAH 06-330	Gas Well	P	6	15	S	9	E
43-007-30716-00-00	UTAH 06-483	Gas Well	P	6	15	S	9	E
43-007-30409-00-00	UTAH 07-234	Gas Well	P	7	15	S	9	E
43-007-30421-00-00	UTAH 07-235	Gas Well	P	7	15	S	9	E
43-007-30411-00-00	UTAH 08-231	Gas Well	P	8	15	S	9	E
43-007-30488-00-00	UTAH 08-233	Gas Well	P	8	15	S	9	E
43-015-30464-00-00	UTAH 08-354	Gas Well	P	8	16	S	9	E
43-015-30378-00-00	UTAH 08-355	Gas Well	P	8	16	S	9	E
43-015-30379-00-00	UTAH 08-356	Gas Well	P	8	16	S	9	E
43-015-30380-00-00	UTAH 08-357	Gas Well	P	8	16	S	9	E
43-007-30449-00-00	UTAH 09-227	Gas Well	P	9	15	S	9	E
43-007-30561-00-00	UTAH 09-329	Gas Well	P	9	15	S	9	E
43-015-30300-00-00	UTAH 09-358	Gas Well	P	9	16	S	9	E
43-015-30407-00-00	UTAH 09-359	Gas Well	P	9	16	S	9	E
43-015-30397-00-00	UTAH 09-360	Gas Well	P	9	16	S	9	E
43-015-30408-00-00	UTAH 09-361	Gas Well	P	9	16	S	9	E
43-007-30580-00-00	UTAH 09-412	Gas Well	P	9	15	S	10	E
43-007-30605-00-00	UTAH 09-413	Gas Well	P	9	15	S	10	E
43-007-30657-00-00	UTAH 09-450	Gas Well	P	9	15	S	10	E
43-007-30722-00-00	UTAH 09-453	Gas Well	P	9	15	S	10	E
43-007-30302-00-00	UTAH 10-01-36	Gas Well	P	10	15	S	9	E
43-007-30298-00-00	UTAH 10-219	Gas Well	P	10	15	S	9	E
43-007-30432-00-00	UTAH 10-220	Gas Well	P	10	15	S	9	E
43-007-30303-00-00	UTAH 10-221	Gas Well	P	10	15	S	9	E
43-007-30228-00-00	UTAH 11-50	Gas Well	P	11	15	S	9	E
43-007-30229-00-00	UTAH 11-51	Gas Well	P	11	15	S	9	E
43-007-30230-00-00	UTAH 11-52	Gas Well	P	11	15	S	9	E
43-007-30231-00-00	UTAH 11-53	Gas Well	P	11	15	S	9	E
43-007-30467-00-00	UTAH 1-209	Gas Well	P	1	15	S	8	E
43-007-30210-00-00	UTAH 12-15-37	Gas Well	P	12	15	S	9	E
43-007-30232-00-00	UTAH 12-54	Gas Well	P	12	15	S	9	E
43-007-30233-00-00	UTAH 12-55	Gas Well	P	12	15	S	9	E
43-007-30234-00-00	UTAH 12-56	Gas Well	P	12	15	S	9	E
43-015-30493-00-00	UTAH 13-376	Gas Well	P	13	16	S	8	E
43-015-30301-00-00	UTAH 13-550	Gas Well	P	13	16	S	8	E
43-007-30243-00-00	UTAH 13-65	Gas Well	P	13	15	S	9	E
43-007-30244-00-00	UTAH 13-66	Gas Well	P	13	15	S	9	E
43-007-30245-00-00	UTAH 13-67	Gas Well	P	13	15	S	9	E
43-007-30246-00-00	UTAH 13-68	Gas Well	P	13	15	S	9	E
43-007-30439-00-00	UTAH 13-92	Gas Well	P	13	14	S	9	E
43-007-30220-00-00	UTAH 1-42	Gas Well	P	1	15	S	9	E
43-007-30221-00-00	UTAH 1-43	Gas Well	P	1	15	S	9	E
43-007-30222-00-00	UTAH 1-44	Gas Well	P	1	15	S	9	E
43-007-30223-00-00	UTAH 1-45	Gas Well	P	1	15	S	9	E
43-015-30330-00-00	UTAH 14-551	Gas Well	P	14	16	S	8	E
43-015-30331-00-00	UTAH 14-552	Gas Well	P	14	16	S	8	E
43-007-30239-00-00	UTAH 14-61	Gas Well	P	14	15	S	9	E
43-007-30240-00-00	UTAH 14-62	Gas Well	P	14	15	S	9	E
43-007-30241-00-00	UTAH 14-63	Gas Well	P	14	15	S	9	E
43-007-30242-00-00	UTAH 14-64	Gas Well	P	14	15	S	9	E
43-015-30334-00-00	UTAH 15-553	Gas Well	P	15	16	S	8	E
43-007-30416-00-00	UTAH 17-101	Gas Well	P	17	15	S	10	E
43-007-30277-00-00	UTAH 17-102	Gas Well	P	17	15	S	10	E

Utah Well List as of 12/26/02

API Well Number	Well Name	Well Type	Well Status	Sec	Twpn	Twpd	Rngn	Rngd
43-007-30255-00-00	UTAH 24-80	Gas Well	P	24	15	S	9	E
43-007-30256-00-00	UTAH 24-81	Gas Well	P	24	15	S	9	E
43-007-30267-00-00	UTAH 24-86	Gas Well	P	24	15	S	9	E
43-007-30375-00-00	UTAH 24-87	Gas Well	P	24	15	S	9	E
43-007-30227-00-00	UTAH 2-49	Gas Well	P	2	15	S	9	E
43-007-30157-00-00	UTAH 25-11-7	Gas Well	P	25	14	S	9	E
43-007-30399-00-00	UTAH 25-134	Gas Well	P	25	15	S	9	E
43-007-30400-00-00	UTAH 25-252	Gas Well	P	25	15	S	9	E
43-007-30401-00-00	UTAH 25-253	Gas Well	P	25	15	S	9	E
43-007-30402-00-00	UTAH 25-254	Gas Well	P	25	15	S	9	E
43-007-30600-00-00	UTAH 25-389	Gas Well	P	25	14	S	8	E
43-007-30599-00-00	UTAH 25-390	Gas Well	P	25	14	S	8	E
43-007-30658-00-00	UTAH 25-391	Gas Well	P	25	14	S	8	E
43-007-30602-00-00	UTAH 25-392	Gas Well	P	25	14	S	8	E
43-007-30206-00-00	UTAH 25-4-33	Gas Well	P	25	14	S	9	E
43-015-30519-00-00	UTAH 25-577	Gas Well	P	25	16	S	8	E
43-007-30156-00-00	UTAH 25-7-6	Gas Well	P	25	14	S	9	E
43-007-30204-00-00	UTAH 26-11-25	Gas Well	P	26	14	S	9	E
43-007-30205-00-00	UTAH 26-1-23	Gas Well	P	26	14	S	9	E
43-007-30181-00-00	UTAH 26-16-8	Gas Well	P	26	14	S	9	E
43-007-30446-00-00	UTAH 26-255	Gas Well	P	26	15	S	9	E
43-007-30445-00-00	UTAH 26-256	Gas Well	P	26	15	S	9	E
43-007-30444-00-00	UTAH 26-257	Gas Well	P	26	15	S	9	E
43-007-30514-00-00	UTAH 26-267	Gas Well	P	26	15	S	9	E
43-015-30541-00-00	UTAH 26-580	Gas Well	P	26	16	S	8	E
43-015-30542-00-00	UTAH 26-581	Gas Well	P	26	16	S	8	E
43-015-30544-00-00	UTAH 26-583	Gas Well	P	26	16	S	8	E
43-007-30202-00-00	UTAH 26-6-24	Gas Well	P	26	14	S	9	E
43-007-30395-00-00	UTAH 27-187	Gas Well	P	27	14	S	9	E
43-007-30292-00-00	UTAH 27-188	Gas Well	P	27	14	S	9	E
43-007-30457-00-00	UTAH 27-268	Gas Well	P	27	15	S	9	E
43-007-30458-00-00	UTAH 27-269	Gas Well	P	27	15	S	9	E
43-007-30712-00-00	UTAH 27-457	Gas Well	P	27	14	S	8	E
43-007-30714-00-00	UTAH 27-458	Gas Well	P	27	14	S	8	E
43-007-30777-00-00	UTAH 27-520	Gas Well	P	27	14	S	8	E
43-015-30545-00-00	UTAH 27-584	Gas Well	P	27	16	S	8	E
43-007-30193-00-00	UTAH 27-8-29	Gas Well	P	27	14	S	9	E
43-007-30186-00-00	UTAH 27-9-30	Gas Well	P	27	14	S	9	E
43-007-30396-00-00	UTAH 28-189	Gas Well	P	28	14	S	9	E
43-007-30397-00-00	UTAH 28-190	Gas Well	P	28	14	S	9	E
43-007-30293-00-00	UTAH 28-191	Gas Well	P	28	14	S	9	E
43-007-30294-00-00	UTAH 28-192	Gas Well	P	28	14	S	9	E
43-007-30551-00-00	UTAH 28-320	Gas Well	P	28	15	S	9	E
43-007-30560-00-00	UTAH 28-321	Gas Well	P	28	15	S	9	E
43-007-30405-00-00	UTAH 29-193	Gas Well	P	29	14	S	9	E
43-007-30427-00-00	UTAH 29-194	Gas Well	P	29	14	S	9	E
43-007-30739-00-00	UTAH 29-339	Gas Well	P	29	15	S	9	E
43-007-30740-00-00	UTAH 29-340	Gas Well	P	29	15	S	9	E
43-007-30741-00-00	UTAH 29-341	Gas Well	P	29	15	S	9	E
43-007-30742-00-00	UTAH 29-342	Gas Well	P	29	15	S	9	E
43-007-30262-00-00	UTAH 30-125	Gas Well	P	30	14	S	10	E
43-007-30185-00-00	UTAH 30-13-14	Gas Well	P	30	14	S	10	E
43-007-30265-00-00	UTAH 30-195	Gas Well	P	30	14	S	9	E
43-007-30344-00-00	UTAH 30-196	Gas Well	P	30	14	S	9	E

Utah Well List as of 12/26/02

API Well Number	Well Name	Well Type	Well Status	Sec	Twpn	Twpd	Rngn	Rngd
43-007-30178-00-00	UTAH 36-1-2	Gas Well	P	36	14	S	9	E
43-007-30341-00-00	UTAH 36-135	Gas Well	P	36	15	S	9	E
43-007-30343-00-00	UTAH 36-136	Gas Well	P	36	15	S	9	E
43-007-30342-00-00	UTAH 36-137	Gas Well	P	36	15	S	9	E
43-007-30315-00-00	UTAH 36-162	Gas Well	P	36	14	S	8	E
43-007-30316-00-00	UTAH 36-163	Gas Well	P	36	14	S	8	E
43-007-30317-00-00	UTAH 36-164	Gas Well	P	36	14	S	8	E
43-007-30318-00-00	UTAH 36-165	Gas Well	P	36	14	S	8	E
43-007-30144-00-00	UTAH 36-9-5	Gas Well	P	36	14	S	9	E
43-015-30341-00-00	UTAH 4-280	Gas Well	P	4	16	S	9	E
43-015-30342-00-00	UTAH 4-282	Gas Well	P	4	16	S	9	E
43-007-30384-00-00	UTAH 5-205	Gas Well	P	5	15	S	9	E
43-007-30269-00-00	UTAH 5-94	Gas Well	P	5	15	S	10	E
43-007-30270-00-00	UTAH 5-95	Gas Well	P	5	15	S	10	E
43-007-30271-00-00	UTAH 5-96	Gas Well	P	5	15	S	10	E
43-007-30217-00-00	UTAH 6-38	Gas Well	P	6	15	S	10	E
43-007-30218-00-00	UTAH 6-39	Gas Well	P	6	15	S	10	E
43-007-30219-00-00	UTAH 6-40	Gas Well	P	6	15	S	10	E
43-007-30254-00-00	UTAH 6-41	Gas Well	P	6	15	S	10	E
43-007-30235-00-00	UTAH 7-57	Gas Well	P	7	15	S	10	E
43-007-30236-00-00	UTAH 7-58	Gas Well	P	7	15	S	10	E
43-007-30237-00-00	UTAH 7-59	Gas Well	P	7	15	S	10	E
43-007-30238-00-00	UTAH 7-60	Gas Well	P	7	15	S	10	E
43-007-30275-00-00	UTAH 8-100	Gas Well	P	8	15	S	10	E
43-007-30410-00-00	UTAH 8-230	Gas Well	P	8	15	S	9	E
43-007-30272-00-00	UTAH 8-97	Gas Well	P	8	15	S	10	E
43-007-30285-00-00	UTAH 8-98X	Gas Well	P	8	15	S	10	E
43-007-30274-00-00	UTAH 8-99	Gas Well	P	8	15	S	10	E
43-007-30413-00-00	UTAH 9-228	Gas Well	P	9	15	S	9	E
43-007-30414-00-00	UTAH 9-229	Gas Well	P	9	15	S	9	E
43-007-30279-00-00	WILLIAMS 30-78	Gas Well	P	30	14	S	10	E
43-007-30481-00-00	WOOLSTENHULME 05-266	Gas Well	P	5	15	S	10	E
43-015-30250-00-00	UTAH 16-110	Gas Well	Shut_In	16	16	S	9	E

FORM 9

STATE OF UTAH

DIVISION OF OIL, GAS AND MINING

CONFIDENTIAL

5. Lease Designation and Serial Number: Private

SUNDRY NOTICES AND REPORTS ON WELLS

Do not use this form for proposals to drill new wells, deepen existing wells, or to reenter plugged and abandoned wells. Use APPLICATION FOR PERMIT TO DRILL OR DEEPEN form for such proposals.

6. If Indian, Allottee or Tribe Name: N/A

7. Unit Agreement Name: Drunkards Wash UTU-67921X

1. Type of Well: OIL ☐ GAS ☒ OTHER:

8. Well Name and Number: Seely 15-499

2. Name of Operator: ConocoPhillips Company

9. API Well Number: 43-007-30798

3. Address and Telephone Number: 6825 S. 5300 W. P.O. Box 851 Price, Utah 84501 (435) 613-9777

10. Field or Pool, or Wildcat: Drunkards Wash

4. Location of Well
Footages: 496' FSL, 2196' FWL
QQ, Sec., T., R., M.: SE/4 SW/4 SEC. 15, T14S, R08E, SLB & M

County: Carbon County
State: Utah

11. **CHECK APPROPRIATE BOXES TO INDICATE NATURE OF NOTICE, REPORT, OR OTHER DATA**

NOTICE OF INTENT
(Submit in Duplicate)

- ☐ Abandon
- ☐ Repair Casing
- ☐ Change of Plans
- ☐ Convert to Injection
- ☐ Fracture Treat or Acidize
- ☐ Multiple Completion
- ☐ Other
- ☐ New Construction
- ☐ Pull or Alter Casing
- ☐ Recomplete
- ☐ Reperforate
- ☐ Vent or Flare
- ☐ Water Shut-Off

Approximate date work will start

SUBSEQUENT REPORT
(Submit Original Form Only)

- ☐ Abandon *
- ☐ Repair Casing
- ☐ Change of Plans
- ☐ Convert to Injection
- ☐ Fracture Treat or Acidize
- ☒ Other APD Extension Request
- ☐ New Construction
- ☐ Pull or Alter Casing
- ☐ Reperforate
- ☐ Vent or Flare
- ☐ Water Shut-Off

Date of work completion

Report results of Multiple Completions and Recompletions to different reservoirs on WELL COMPLETION OR RECOMPLETION REPORT AND LOG form.

* Must be accompanied by a cement verification report.

12. DESCRIBE PROPOSED OR COMPLETED OPERATIONS (Clearly state all pertinent details, and give pertinent dates. If well is directionally drilled, give subsurface locations and measured and true vertical depths for all markers and zones pertinent to this work.)

Please be advised that ConocoPhillips Company is requesting a one year extension on the permit expiration date for the Seely 15-499 well location. This well is located more than 460' from the boundary of the Drunkards Wash Federal Unit and from the boundary of any uncommitted tract within the unit and will not require administrative approval in accordance with Utah Administrative Code Rule R649-3-3.

Approved by the Utah Division of Oil, Gas and Mining
Date: 08-28-03
By:

COPY

CONFIDENTIAL

COPY SENT TO OPERATOR
Date: 8-28-03
Initials: CHD

13.

Name & Signature: Jean Semborski

Title: Permitting Supervisor

Date: 8/13/03

(This space for state use only)

RECEIVED
AUG 21 2003
DIV. OF OIL, GAS & MINING

(4/94)

(See Instructions on Reverse Side)

[redacted]

Application for Permit to Drill
Request for Permit Extension
Validation
(this form should accompany the Sundry Notice requesting permit extension)

API: 43-007-30798
Well Name: SEELY 15-499
Location: SE/4SW/4 SEC. 15, T14S, R8E, SLB&M
Company Permit Issued to: CONOCOPHILLIPS
Date Original Permit Issued: 8/23/2001

The undersigned as owner with legal rights to drill on the property as permitted above, hereby verifies that the information as submitted in the previously approved application to drill, remains valid and does not require revision.

Following is a checklist of some items related to the application, which should be verified.

If located on private land, has the ownership changed, if so, has the surface agreement been updated? Yes☐ No☑

Have any wells been drilled in the vicinity of the proposed well which would affect the spacing or siting requirements for this location? Yes☐ No☑

Has there been any unit or other agreements put in place that could affect the permitting or operation of this proposed well? Yes☐ No☑

Have there been any changes to the access route including ownership, or right-of-way, which could affect the proposed location? Yes☐ No☑

Has the approved source of water for drilling changed? Yes☐ No☑

Have there been any physical changes to the surface location or access route which will require a change in plans from what was discussed at the onsite evaluation? Yes☐ No☑

Is bonding still in place, which covers this proposed well? Yes☑ No☐

Signature: Sam Sentinsli
Date: 8/22/2003

Title: PERMITTING SUPERVISOR

Representing: CONOCOPHILLIPS COMPANY

RECEIVED
AUG 2 6 2003
DIV. OF OIL, GAS & MINING

State of Utah

Department of Natural Resources

ROBERT L. MORGAN
Executive Director

Division of Oil, Gas & Mining

LOWELL P. BRAXTON
Division Director

OLENE S. WALKER
Governor

GAYLE F. McKEACHNIE
Lieutenant Governor

September 21, 2004

Jean Semborski
ConocoPhillips Company
P O Box 851
Price, UT 84501

Re: APD Rescinded – Seely 15-499 Sec. 15, T. 14S, R. 8E
Carbon County, Utah API No. 43-007-30798

Dear Ms. Semborski:

The Application for Permit to Drill (APD) for the subject well was approved by the Division of Oil, Gas and Mining (Division) on August 23, 2001. On September 12, 2002 and August 28, 2003 the Division granted a one-year APD extension. No drilling activity at this location has been reported to the division. Therefore, approval to drill the well is hereby rescinded, effective September 21, 2004.

A new APD must be filed with this office for approval prior to the commencement of any future work on the subject location.

If any previously unreported operations have been performed on this well location, it is imperative that you notify the Division immediately.

Sincerely,

Diana Whitney
Engineering Technician

cc: Well File
Gil Hunt, Technical Services Manager

1594 West North Temple, Suite 1210, PO Box 145801, Salt Lake City, UT 84114-5801
telephone (801) 538-5340 • facsimile (801) 359-3940 • TTY (801) 538-7458 • *www.ogm.utah.gov*

Utah!
Where ideas connect™