Form 3160-3
(December 1990)

SUBMIT IN TRIPLICATE*
(Other instructions on reverse side)

Form approved.
Budget Bureau No. 1004-0136
Expires: December 31, 1991

UNITED STATES
DEPARTMENT OF THE INTERIOR
BUREAU OF LAND MANAGEMENT

APPLICATION FOR PERMIT TO DRILL OR DEEPEN

5. LEASE DESIGNATION AND SERIAL NO.: U-60402

6. IF INDIAN, ALLOTTEE OR TRIBE NAME: N/A

7. UNIT AGREEMENT NAME: Drunkards Wash

8. FARM OR LEASE NAME, WELL NO.: USA 14-417

9. API WELL NO.:

10. FIELD AND POOL, OR WILDCAT: Drunkards Wash

11. SEC., T., R., M., OR BLK. AND SURVEY OR AREA: NE/4, SE/4, Sec.14, T15S, R8E, SLB&M

1a. TYPE OF WORK: DRILL [X] DEEPEN [ ]

b. TYPE OF WELL: OIL WELL [ ] GAS WELL [X] OTHER — SINGLE ZONE [X] MULTIPLE ZONE [ ]

2. NAME OF OPERATOR: RIVER GAS CORPORATION

3. ADDRESS AND TELEPHONE NO.: 1305 So. 100 E. Price, Utah 84501 (435) 637-8876

4. LOCATION OF WELL (Report location clearly and in accordance with any State requirements.*)
At surface: 1741' FSL, 1054' FEL 4374042 N 501004 E
At proposed prod. zone:

CONFIDENTIAL

14. DISTANCE IN MILES AND DIRECTION FROM NEAREST TOWN OR POST OFFICE*: 11.2 miles southwest of Price, Utah.

12. COUNTY OR PARISH: Carbon

13. STATE: Utah

15. DISTANCE FROM PROPOSED* LOCATION TO NEAREST PROPERTY OR LEASE LINE, FT. (Also to nearest drlg. unit line, if any): 1720'

16. NO. OF ACRES IN LEASE: 2902 Acres

17. NO. OF ACRES ASSIGNED TO THIS WELL: 160 acres

18. DISTANCE FROM PROPOSED LOCATION TO NEAREST WELL, DRILLING, COMPLETED, OR APPLIED FOR, ON THIS LEASE, FT.: 2200'

19. PROPOSED DEPTH: 3990'

20. ROTARY OR CABLE TOOLS: Rotary

21. ELEVATIONS (Show whether DF, RT, GR, etc.): 6818' GR

22. APPROX. DATE WORK WILL START*: June 2000

23. PROPOSED CASING AND CEMENTING PROGRAM

SIZE OF HOLE	GRADE, SIZE OF CASING	WEIGHT PER FOOT	SETTING DEPTH	QUANTITY OF CEMENT
15"	12-3/4"	Conductor	40'	
11"	J-55 8-5/8"	24 #/ft	400'	155 sks G+2% CaCl + 1/4# per sack flocel
7-7/8"	N-80 5-1/2"	17 #/ft	3990'	355 sks 50/50 POZ +8%gel+2%CaCl+10%extender. 105 sks "G" thixotropic

RECEIVED
DEC 27 1999

Federal Approval of this Action is Necessary

IN ABOVE SPACE DESCRIBE PROPOSED PROGRAM: If proposal is to deepen, give data present productive zone and proposed new productive zone. If proposal is to drill or deepen directionally, give pertinent data on subsurface locations and measured and true vertical depths. Give blowout preventer program, if any.

24.
SIGNED: Sean Sembrski TITLE: Permitting Specialist DATE: 12/24/99

(This space for Federal or State office use)

PERMIT NO. 43007-30647 APPROVAL DATE

Application approval does not warrant or certify that the applicant holds legal or equitable title to those rights in the subject lease which would entitle the applicant to conduct operations thereon.
CONDITIONS OF APPROVAL, IF ANY:

APPROVED BY: Bradley G. Hill TITLE: BRADLEY G. HILL RECLAMATION SPECIALIST III DATE: 1/10/00

***See Instructions On Reverse Side**

Title 18 U.S.C. Section 1001, makes it a crime for any person knowingly and willfully to make to any department or agency or the United States any false, fictitious or fraudulent statements or representations as to any matter within its jurisdiction.

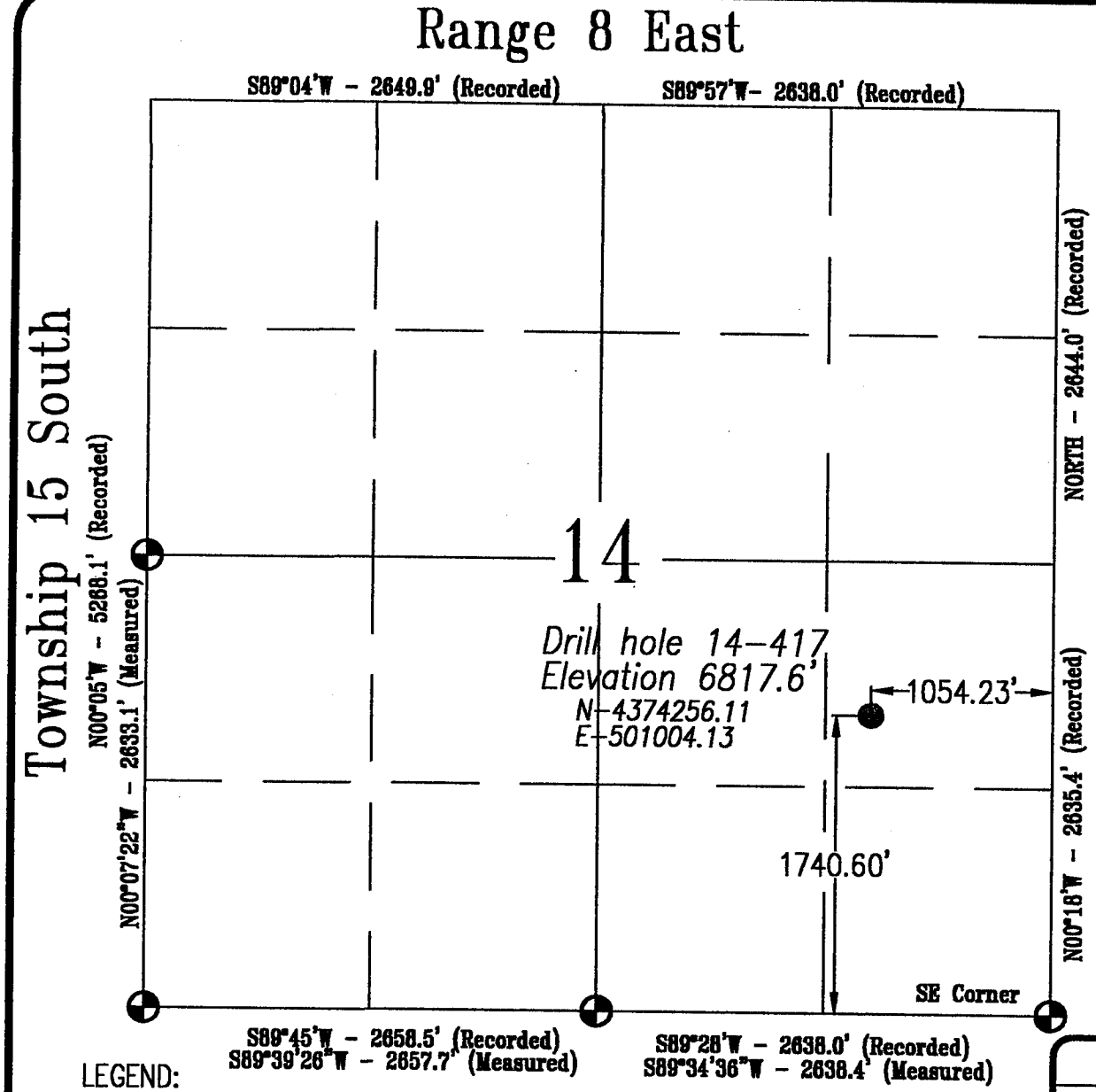

Location

The Bearings Indicated are per the recorded plat obtained from the U.S. Land Office. The well location was determined using a Trimble 4400 GPS Unit.

Basis Of Elevation:

Basis of Elevation of 6864' as indicated in the SE Corner of Section 14, Township 15 South, Range 8 East, Salt Lake Base and Meridian, as shown on the Pinnacle Peak Quadrangle 7.5 Minute Series Map.

Description of Well Point

Proposed Drill Hole located in the NE 1/4 SE1/4 of Section 14; being 1740.60' North and 1054.23' West from the SE Corner of Section 14, T15S, R8E, Salt Lake Base & Meridian.

Surveyor's Certificate:

I, Daniel W. Peatross, a Registered Licensed Land Surveyor, holding Certificate #259966, State of Utah, do hereby certify that the information on this drawing is true and accurate to the best of my knowledge and belief, and was conducted by myself, as shown hereon.

Registered Land Surveyor
No. 259966
Daniel W. Peatross
State of Utah

12-16-99

LEGEND:

- ● *Drill Hole Location*
- ⊕ *Found Section Corner Monumented w/ Brass Cap unless indicated otherwise.*
- ○ *Section Corner searched for but not found*

SCALE:

250' 0' 500' 1000'

DRAWN BY: P. BOYLEN	Castle Valley Surveying 3286 South 125 West Price, Utah 84501 (801) 637-9300 FAX (801) 637-2833
CHECKED BY: D.W.P.	
DATE: 12/13/99	
SCALE: 1"=1000'	
JOB NO. 555	River Gas Corporation Well# 14-417 Section 14, T15S, R8E, S.L.B.&M. Carbon County, Utah
DRAWING NO. A-1	
SHEET 1 OF 4	

Exhibit "A" 1 of 3

United States Department of the Interior

BUREAU OF LAND MANAGEMENT
Utah State Office
P.O. Box 45155
Salt Lake City, Utah 84145-0155

IN REPLY REFER TO:
3160
(UT-922)

January 3, 2000

Memorandum

To: Assistant District Manager Minerals, Moab District

From: Michael Coulthard, Petroleum Engineer

Subject: 2000 Plan of Development Drunkards Wash Unit
Carbon County, Utah.

Pursuant to email between Lisha Cordova, Division of Oil, Gas and Mining, and Mickey Coulthard, Utah State Office, Bureau of Land Management. The following wells are planned for calendar year 2000 within the Drunkards Wash Unit, Carbon County, Utah.

API #	WELL NAME	LOCATION
43-007-30645	USA 13-418	0737-FSL 0793-FWL 13 15S 08E
43-007-30646	USA 14-416	0892-FSL 1311-FWL 14 15S 08E
43-007-30647	USA 14-417	1741-FSL 1054-FEL 14 15S 08E

This office has no objection to permitting the wells at this time.

/s/ Michael L. Coulthard

bcc: File - Drunkards Wash
Division of Oil Gas and Mining
Agr. Sec. Chron
Fluid Chron

MCoulthard:mc:1-3-0

RECEIVED

DEC 27 1999

DIVISION OF OIL, GAS & MINING

RGC

RIVER GAS CORPORATION
UTAH OPERATIONS
1305 South 100 East
Price, Utah 84501
Bus. (435) 637-8876
FAX (435) 637-8924

December 24,1999

Mr. Eric Jones
Petroleum Engineer
Bureau of Land Management
82 E. Dogwood
Moab, Utah 84532

RE: Application for Permit to Drill
USA 14-417 NE/4, SE/4 Sec. 14
T15S, R8E SLB&M, Carbon County, Utah

Dear Eric:

Enclosed is the original of the *Application for Permit to Drill* (APD) for the above named well. Included with the APD is the following information:

Exhibit "A"-Survey Plat of the Proposed Well Site;

Exhibit "B"-Proposed Locations Map with Pipeline, Power, and Road Access;

Exhibit "C"-Drilling Site Layout;

Exhibit "D"-On-site Inspection Checklist;

Exhibit "E"-Production Site Layout;

Exhibit "F"-Typical Road Cross-section;

Exhibit "G"-BOP Diagram;

Exhibit "H"-Typical Wellhead Manifold.

COPY

CONFIDENTIAL

This well is located more than 460' from the exterior boundary of the Drunkards Wash Federal Unit and from the boundary of any uncommitted tract within the Drunkards Wash Federal Unit and will not require administrative approval in accordance with Utah Administrative Code Rule R649-3-3.

Please accept this letter as River Gas Corporation's written request for confidential treatment of all information contained in and pertaining to this permit application, if said information is eligible for such consideration.

Thank you very much for your timely consideration of this application. Please feel free to contact me if you have any questions.

Sincerely,

Jean Semborski
Permitting Specialist

cc: Mr. Don Stephens, BLM, Price, Utah
Mr. Chuck Snure, Texaco
Mr. Joe Coughlin, Dominion Resources
Mr. John Baza, DOGM
Mrs. Tammie Butts, River Gas Corporation
RGC Well File

UT-060-3160-1
December, 1992

Bureau of Land Management
Moab District
Application for Permit to Drill
On-Site Inspection Checklist

Company River Gas Corporation Well No. USA 14-417
Location: Sec. 14, T 15 S, R 8E, Lease No. UTU-60402
On-Site Inspection Date: 11/4/99

All operations will be conducted in such a manner that full compliance is made with applicable laws, regulations (43 CFR 3100), Onshore Oil and Gas Orders, the approved plan of operations and the conditions of approval. The operator is fully responsible for the actions of his subcontractors. A copy of these conditions will be furnished to the field representative to ensure compliance.

A. DRILLING PROGRAM

1. Surface Formation and Estimated Formation Tops:
Surface formation: Upper Mancos Shale
Estimated top of Ferron Formation: 3360' TD=4000'

2. Estimated Depth at Which Oil, Gas, Water or Other Mineral Bearing Zones are Expected to be Encountered

	Formation	Depth
Expected Oil Zones:	none	
Expected Gas Zones:	Ferron Coal Interval:	3380'-3530'
Expected Water Zones:	3380'-3530'	
Expected Mineral Zones:	none	

All fresh water and prospectively valuable minerals encountered during drilling will be recorded by depth and will be cased and cemented. When possible, water flow rates will be measured and samples will be taken and analyzed. All oil and gas shows will be tested to determine commercial potential.

3. Pressure Control Equipment- include schematics of the BOP and choke manifold, and describe testing procedures: Quick Test is contracted to test the manifold, blind rams, and B.O.P to 2000 psi. Surface casing is tested to 1 psi/ft. See attachment.

BOP systems will be consistent with API RP 53 and Onshore Oil and Gas Order No. 2. Pressure tests of the surface casing and all BOP equipment potentially subject to pressure will be conducted before drilling the surface casing shoe. Blowout preventer controls will be installed prior to drilling the surface casing shoe and will remain in use until the well is completed or abandoned. Ram preventers shall be inspected and operated each trip (no more than once a day is necessary), and annular preventers shall be inspected and operated weekly to ensure good mechanical working order. These inspections shall be recorded in the drilling log and in the daily drilling report.

4. Casing Program and Auxiliary Equipment - include casing size, weight, grade, thread and

coupling, setting depth and condition (new or acceptably reconditioned): Approximately 3990' of 5-1/2",N-80 17#/ft production casing will be installed 10% of the above setting depth will be 8-5/8", 24#/ft. J-55 surface casing.

5. Cement-include the cement type, density, yield, additives and amount used in setting each casing string. Also include the anticipated cement fill-up. If stage cementing, describe techniques: See cement design.

6. Mud Program and Circulating Medium- include mud components and weights. When air drilling, also include: length and location of blooie line; description of the auto ignitor; description of the deduster equipment; and amounts, types and characteristics of stand-by mud: Hole will be drilled with air.

7. Coring, Logging and Testing Program: Bulk Density, Gamma, Neutron Density, Resistivity and Caliper logs will be run.
Initial opening of drill stem test tools will be restricted to daylight hours.

8. Abnormal Conditions, Bottom Hole Pressures and Potential Hazards- include anticipated bottomhole pressure and/or pressure gradient: No abnormal conditions are anticipated, formation is slightly over-pressured, estimated BHP: 1700 PSI.

9. Any Other Aspects of this Proposal that should be Addressed:

B. THIRTEEN POINT SURFACE USE PLAN

The dirt contractor will be provided with an approved copy of the surface use plan of operations before initiating construction.

1. Existing Roads:

   a. Proposed route to location (submit a map depicting access and well location).

   b. Location of proposed well in relation to town or other reference point: 11.2 Miles southwest of Price, Utah.

   c. Contact the Carbon County Road Department for use of county roads. The use of Carbon County roads will require an encroachment permit from the Carbon County Road Department.

   d. Plans for improvement and/or maintenance of existing roads: Upgrade and maintain existing state or county roads.

   e. Other:

2. Planned Access Roads:

   a. Location (centerline): Sec. 14, T15S, R8E 1741' FSL, 1054' FEL

   b. Length of new access to be constructed: None

   c. Length of existing roads to be upgraded: 4300'

   d. Maximum total disturbed width: 45'

   e. Maximum travel surface width: 20'

f. Maximum grades: 8-10%

g. Turnouts: none

h. Surface materials: In-place residual of Mancos Shale

i. Drainage (crowning, ditching, culverts, etc): Roads will be crowned with water ditches on both sides. Water will be diverted around pad as necessary and 5 culverts will be required.

j. Cattleguards: none

k. Length of new and/or existing roads which lie outside the lease boundary for which a BLM right-of-way is required: N/A

l. Other:

Surface disturbance and vehicular travel will be limited to the approved location access road. Any additional area needed must be approved by the Area Manager in advance.

If a right-of-way is necessary, no surface disturbing activities shall take place on the subject right-of-way until the associated APD is approved. The holder will adhere to conditions of approval in the Surface Use Program of the approved APD, relevant to any right-of-way facilities.

If a right-of-way is secured, boundary adjustments in the lease or unit shall automatically amend this right-of-way to include that portion of the facility no longer contained within the lease or unit. In the event of an automatic amendment to this right-of-way grant, the prior on-lease/unit conditions of approval of this facility will not be affected even though they would now apply to facilities outside of the lease/unit as a result of a boundary adjustment. Rental fees, if appropriate shall be recalculated based on the conditions of this grant and the regulations in effect at the time of an automatic amendment.

If the well is productive, the access road will be rehabilitated or brought to Resource (Class III) Road Standards within 60 days of dismantling the rig. If upgraded, the access road must be maintained at these standards until the well is properly abandoned. If this time frame cannot be met, the Area Manager will be notified so that temporary drainage control can be installed along the access road.

3. Location of Existing Wells-on a map, show the location of all water, injection, disposal, producing and drilling wells within a one mile radius of the proposed well, and describe the status of each: See Attachment "B"

4. Location of Production Facilities:

a. On-site facilities: See Attachment "E"

b. Off-site facilities: none

c. Pipelines: N/A

All permanent (in place for six months or longer) structures constructed or installed (including oil well pump jacks) will be painted a flat, nonreflective color to match the

standard environmental colors, as determined by the Rocky Mountain Five-State Interagency Committee. All facilities will be painted within six months of installation. Facilities required to comply with the Occupational Safety and Health Act (OSHA) may be excluded. Colors will be as follows: Olive Black

If a gas meter run is constructed, it will be located on lease within 500 feet of the wellhead. The gas flowline will be buried from the wellhead to the meter and will be buried downstream of the meter until it leaves the pad. Meter runs will be housed and/or fenced. The gas meter shall be calibrated prior to first sales and shall be calibrated quarterly thereafter. All gas production and measurement shall comply with the provisions of 43 CFR § 3162. 7-3, Onshore Oil and Gas Order No. 5, and American Gas Association (AGA) Report No. 3.

If a tank battery is constructed on this lease, it will be surrounded by a dike of sufficient capacity to contain 1 ½ times the storage capacity of the largest tank. All loading lines and valves will be placed inside the berm surrounding the tank battery. All oil production and measurement shall conform to the provisions of 43 CFR § 3162.7-3 and Onshore Oil and Gas Order No. 4

Production facilities on location may include a lined or unlined produced water pit as specified in NTL-2B. If water is produced from the well, an NTL-2B application must be submitted.

5. Location and Type of Water Supply:

All water needed for drilling purposes will be obtained from (describe location and/or show on a map): PRWID

A temporary water use permit for this operation will be obtained from the Utah State Engineer in Price, Utah at (801) 637-1303.

Water obtained on private land, or land administered by another agency, will require approval from the owner or agency for use of the land.

6. Source of Construction Material:

Pad construction material will be obtained from (if the source is Federally owned, show location on a map): Private Owner
The use of materials under BLM jurisdiction will conform to 43 CFR 3610.2-3.

7. Methods of Handling Waste Disposal:

Describe the methods and locations proposed for safe containment and disposal of waste material, e.g. cuttings, produced water, garbage, sewage, chemicals, etc.

The reserve pit will be lined with (native material, bentonite, synthetic material): Pit will be lined with native material unless otherwise designated by BLM officers prior to construction.

The reserve pit will be located at the: Northeast end of the location, and the pit walls will be sloped at no greater than 2 to 1.

The reserve pit shall be located in cut material, with at least 50% of the pit volume being below original ground level. Three sides of the reserve pit will be fenced before drilling

starts. The fourth side will be fenced as soon as drilling is completed, and shall remain until the pit is dry. As soon as the reserve pit has dried, all areas not needed for production will be rehabilitated.

Trash must be contained in a trash cage and hauled away to an approved disposal site as necessary but no later than at the completion of drilling operations.

8. Ancillary Facilities: Garbage containers and portable toilets.

9. Well Site Layout - depict the pit, rig, cut and fill, topsoil, etc. on a plat with a scale of at least 1" = 50'.

All well, whether drilling, producing, suspended, or abandoned, will be identified in accordance with 43 CFR 3162.6.

Access to the well pad will be from: East side of location.

The blooie line will be located in the: Northeast, at least 100 feet from the well head.

To minimize the amount of fugitive dust and spray escaping from the blooie pit, the following blooie line deflection method will be employed: Water injection.

10. Plans for Restoration of the Surface:

The top 6 inches of topsoil material will be removed from the location and stockpiled separately on: adjacent land.

Topsoil along the access road will be reserved in place adjacent to the road.

Immediately upon completion of drilling, all equipment that is not necessary for production shall removed.

The reserve pit and that portion of the location not needed for production will be reclaimed.

Before any dirt work to restore the location takes place, the reserve pit must be completely dry.

Reclaimed roads will have the berms and cuts reduced and will be closed to vehicle use.

All disturbed areas will be recontoured to replicate the natural slope.

The stockpiled topsoil will be evenly distributed over the disturbed area.

Prior to reseeding, all disturbed areas, including the access roads, will be scarified and left with a rough surface.

Seed will be broadcast or drilled between Sept. and Nov., or at a time specified by the BLM. If broadcast, a harrow or some other implement will be dragged over the seeded area to assure seed coverage.

The following seed mixture will be used:

BLM recommended mixture: Pinion and Juniper vegetation type

The abandonment marker will be one of the following, as specified by BLM:

1) at least four feet above ground level,
2) at restored ground level, or
3) below ground level.

In any case the marker shall be inscribed with the following: operator name, lease number, well name and surveyed description (township, range, section and either quarter-quarter or footages).

Additional requirements:

11. Surface and Mineral Ownership: BLM

12. Other Information:

a. Archeological Concerns: none

The operator is responsible for informing all persons in the area who are associated with this project that they will be subject to prosecution for knowingly disturbing historic or archaeological sites, or for collecting artifacts. If historic or archaeological materials are uncovered during construction, the operator is to immediately stop work that might further disturb such materials, and contact the authorized officer (AO). Within five (5) working days, the AO will inform the operator as to:

- whether the materials appear eligible for the National Register of Historic Places;
- the mitigation measures the operator will likely have to undertake before the site can be used (assuming in situ preservation is not necessary); and
- a time frame for the AO to complete an expedited review under 36 CFR 800.11 to confirm, through the State Historic Preservation Officer, that the findings of the AO are correct and that mitigation is appropriate.

If the operator wishes, at any time, to relocate activities to avoid the expense of mitigation and/or the delays associated with this process, the AO will assume responsibility for whatever recordation and stabilization of the exposed materials may be required. Otherwise, the operator will be responsible for mitigation costs. The AO will provide technical and procedural guidelines for the conduct of mitigation. Upon verification from the AO that the required mitigation has been completed, the operator will then be allowed to resume construction.

b. Threatened and Endangered Species Concerns: No

c. Wildlife Seasonal Restrictions (yes/no): Yes. See EIS

d. Off Location Geophysical Testing: N/A

e. Drainage crossings that require additional State or Federal approval: N/A

f. Other: N/A

13. Lessee's or Operator's Representative and Certification

Representative:

Name: Jean Semborski

Title: Permitting Specialist

Address: 1305 South 100 East
Price, Utah 84501

Phone No: (435)637-8876

Certification:

I hereby certify that I, or persons under my direct supervision, have inspected the proposed drill site and access route; that I am familiar with the conditions which currently exists; that the statements made in this APD package are, to the best of my knowledge, true and correct; and that the work associated with the operations proposed herein will be performed by RGC and its contractors and subcontractors in conformity with this APD package and the terms and conditions under which it is approved. I also certify responsibility for the operations conducted on that portion of the leased lands associated with this application, with bond coverage being provided under BLM bond no. S304604. This statement is subject to the provisions of 18 U.S.C. 1001 for the filing of a false statement.

Jean Semborski
Signature

Permitting Specialist
Title

12/20/1999
Date

C. REQUIRED APPROVALS, REPORTS AND NOTIFICATIONS

Required verbal notifications are summarized in Table 1, attached.

Building Location- Contact the Resource Area, Natural Resource Protection Specialist at least 24 hours prior to commencing construction of location.

Spud- The spud date will be reported to the Resource Area Office 24 hours prior to spudding. Written notification in the form of a Sundry Notice (Form 3160-5) will be submitted the District Office within 24 hours after spudding, regardless of whether spud was made with a dry hole digger or big rig.

Daily Drilling Reports- Daily drilling reports shall detail the progress and status of the well and shall be submitted to the District Office on a weekly basis.

Monthly Reports of Operations- In accordance with Onshore Oil and Gas Order No. 1, this well shall be reported on Minerals Management Service (MMS) Form 3160, "Monthly Report of Operations," starting the month in which operations commence and continuing each month until the well is physically plugged and abandoned. This report will be filed directly with MMS.

Sundry Notices- There will be no deviation from the proposed drilling and/or workover program without prior approval from the Assistant District Manager. "Sundry Notices and Reports on Wells: (Form 3160-5) will be filed for approval for all changes of plans and other operations in accordance with 43 CFR 3162.3-2. Safe drilling and operating practices must be observed.

Drilling Suspensions- Operations authorized by this permit shall not be suspended for more than 30 days without prior approval of the Authorized Officer. All conditions of this approval shall be applicable during any operations conducted with a replacement rig.

Undesirable Events- Spills, blowouts, fires, leaks, accidents, or any other unusual occurrences shall be immediately reported to the Resource Area in accordance with requirements of NTL-3A.

Cultural Resources- If cultural resources are discovered during construction, work that might disturb the resources is to stop, and the Area Manager is to be notified.

First Production- Should the well be successfully completed for production, the Assistant District Manager, Minerals Division will be notified when the well is placed in producing status. Such notification may be made by phone, but must be followed by a sundry notice or letter not later than five (5) business days following the date on which the well is placed into production.

A first production conference will be scheduled as soon as the productivity of the well is apparent. This conference should be coordinated through the Resource Area Office. The Resource Area Office shall be notified prior to the first sale.

Well Completion Report- Whether the well is completed as a dry hole or as a producer, "Well Completion and Recompletion Report and Log" (Form 3160-4) will be submitted to the District Office not later than thirty (30) days after completion of the well or after completion of operations being performed, in accordance with 43 CFR 3162.4-1. Two copies of all logs, core descriptions, core analysis, well test data, gelogic summaries, sample description, and all other surveys or data obtained and compiled during the drilling, workover, and/or completion operations, will be filed with Form 3160-4. Samples (cuttings and/or samples) will be submitted when requested by the Assistant District Manager.

Venting/Flaring of Gas-NTL-4A allows venting/flaring of gas during the initial well evaluation period not to exceed 30 days or 50 MMcf. Venting/flaring beyond the initial test period threshold must be approved by the District Office.

Off-Lease Measurement, Storage, Commingling- Prior approval must be obtained from the Assistant District Manager for off-lease measurement, off-lease storage and/or commingling (either down-hole or at the surface).

Plugging and Abandonment- If the well is completed as a dry hole, plugging instructions must be obtained from the BLM, Moab District Office prior to initiating plugging operations. Table 1 of this document provides the after-hours phone numbers of personnel who are authorized to give plugging instructions.

A "Subsequent Report of Abandonment" (Form 3160-5) will be filed with the Assistant District Manager, Minerals Divisions within thirty (30) days following completion of the well for abandonment. This report will indicate where plugs were placed and the current status of surface restoration. Upon completion of approved plugging, a regulation marker will be erected in accordance with 43 CFR 3162.6. Final abandonment will not be approved until the surface reclamation work required by the approved APD or approved abandonment notice has been completed to the satisfaction of the Area Manager or his representative, or the appropriate surface managing agency.

TABLE 1
NOTIFICATIONS

Notify Don Stephens of the Price Resource Area, at (435)636-3608 for the following:

2 days prior to commencement of dirt work, construction or reclamation;

1 day prior to spudding;

50 feet prior to reaching surface and intermediate casing depths;

3 hours prior to testing BOPE;

12 hours prior to reaching kickoff point depth (if applicable).

If the person at the above number cannot be reached, notify the Moab District Office at (435) 259-6111. If unsuccessful, notify one of the people listed below.

Well abandonment operations require 24 hour advance notice and prior approval. In the case of newly drilled dry holes, verbal approval can be obtained by calling the Moab District Office, Branch of Fluid Minerals at (435) 259-6111. If approval is needed after work hours, you may contact the following:

Eric Jones, Petroleum Engineer	Office: (435) 259-6111 Home: (435) 259-2214

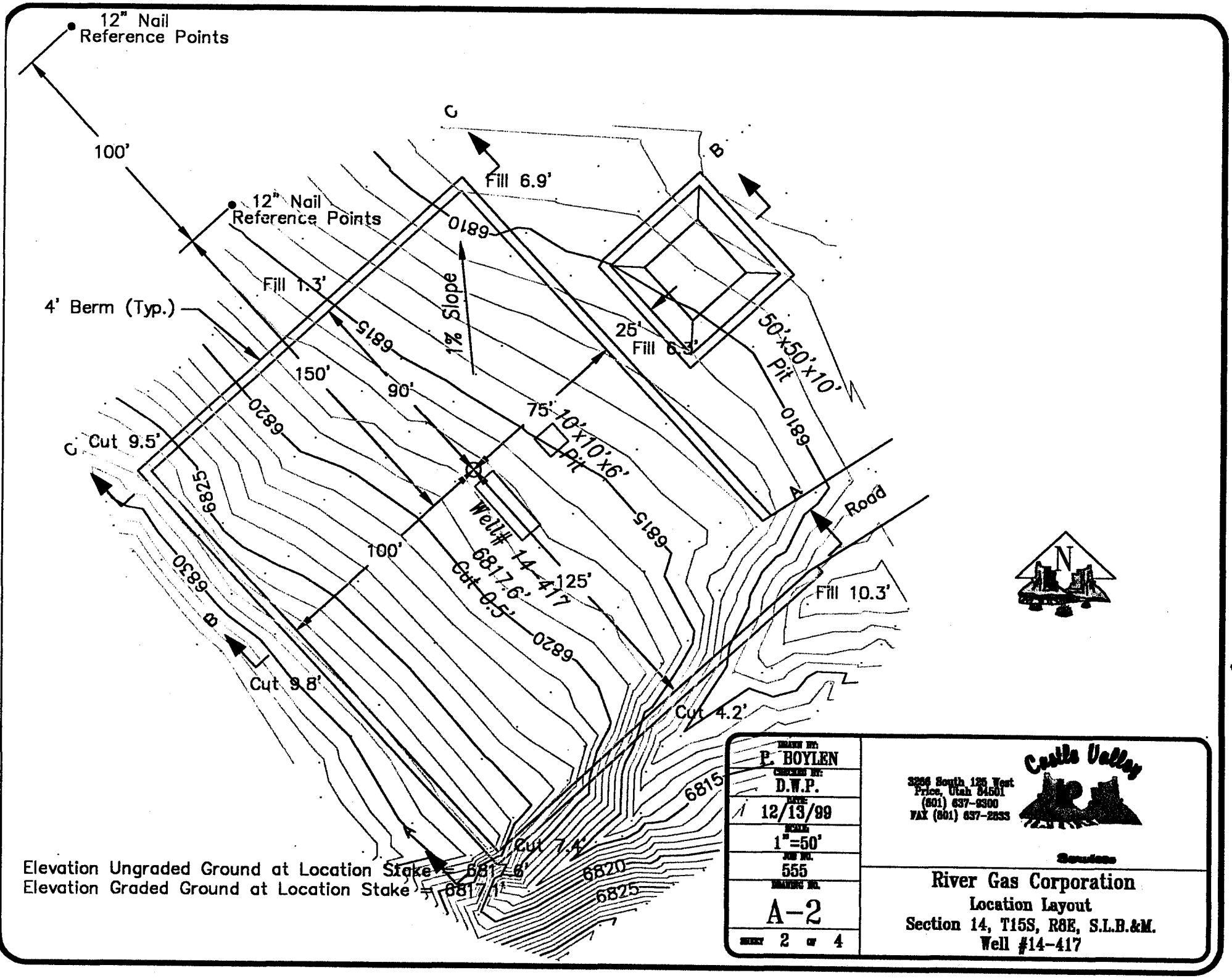

Exhibit "A" 2 of 3

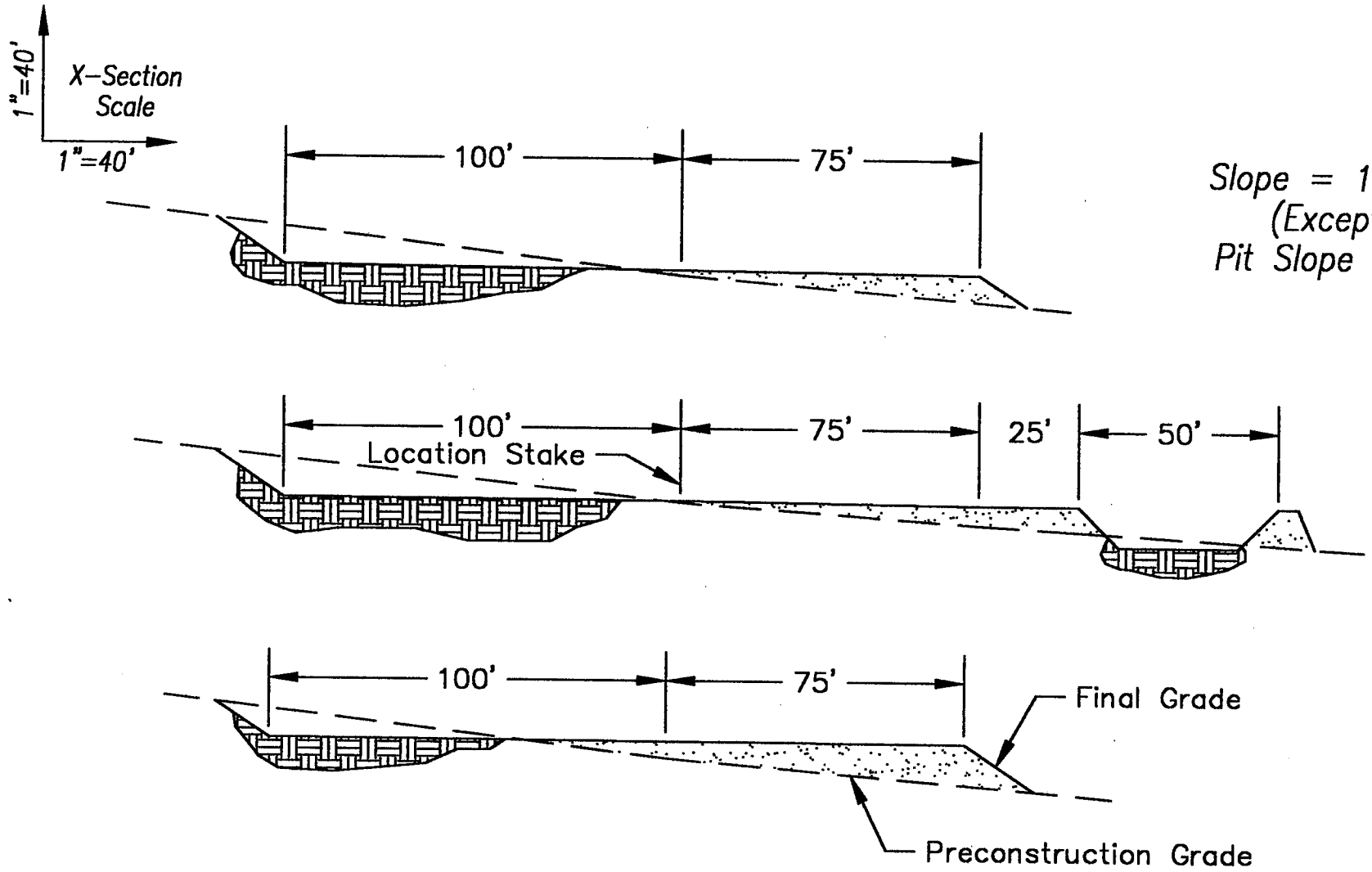

APPROXIMATE YARDAGES

CUT	
(6") Topsoil Stripping	= 750.0 Cu. Yds.
Remaining Location	= 3,699.9 Cu. Yds.
TOTAL CUT	= 4,449.9 Cu. Yds.
TOTAL FILL	= 3,141.0 Cu. Yds.

DRAWN BY: P. BOYLEN	Castle Valley 3206 South 125 West Price, Utah 84501 (801) 637-9300 FAX (801) 637-2633
CHECKED BY: D.W.P.	
DATE: 12/13/99	
SCALE: As Shown	
JOB NO. 555	Surveying
DRAWING NO. C-1	River Gas Corporation Typical Cross Sections Section 14, T15S, R8E, S.L.B.&M. Well #14-417
SHEET 3 OF 4	

Exhibit "A" 3 of 3

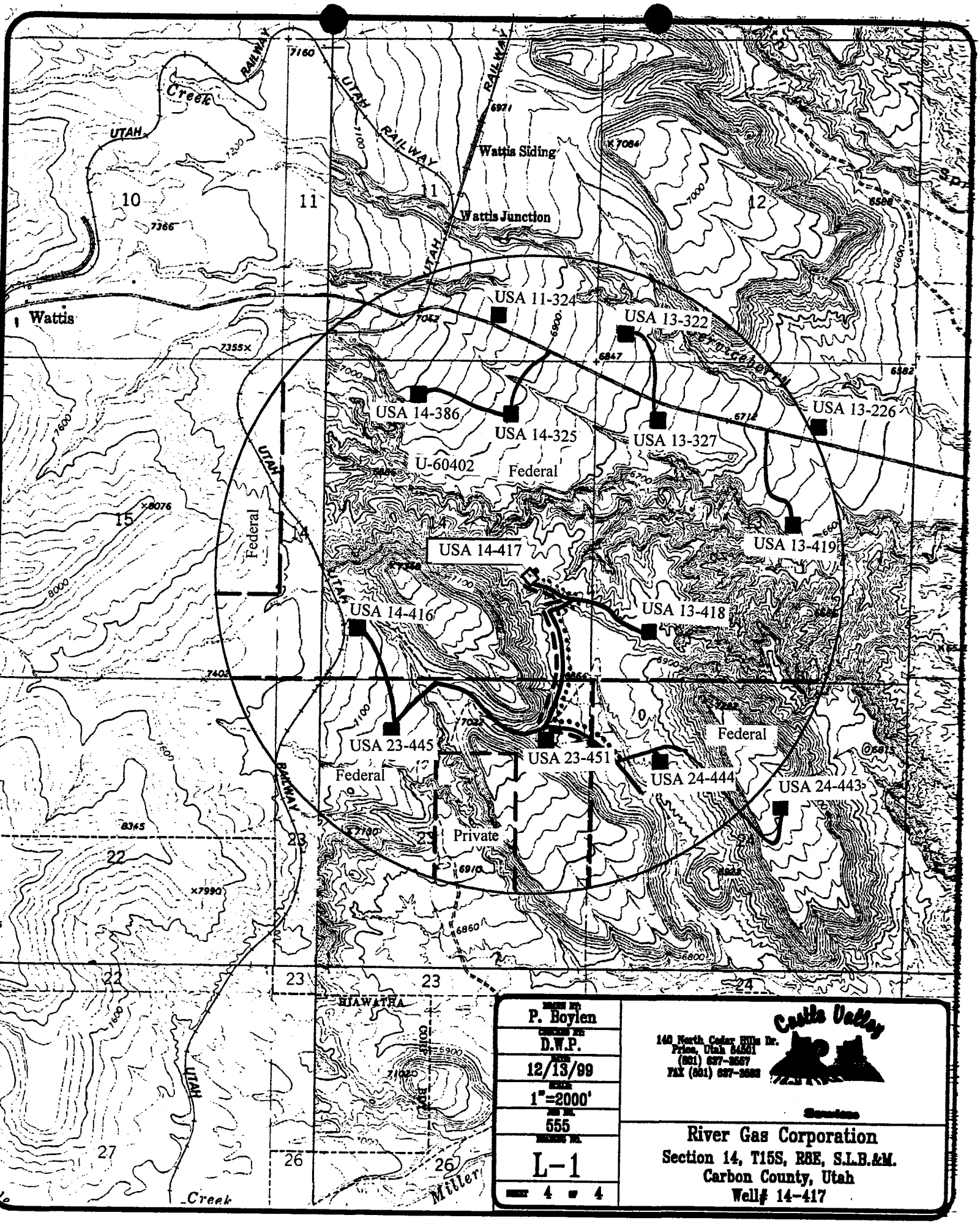
Wattis Siding
Wattis Junction
Wattis
UTAH RAILWAY
Creek
USA 11-324
USA 13-322
USA 14-386
USA 14-325
USA 13-327
USA 13-226
U-60402
Federal
USA 14-417
USA 13-419
USA 14-416
USA 13-418
USA 23-445
USA 23-451
USA 24-444
USA 24-443
Federal
Private
HIAWATHA
Miller Creek
P. Boylen
D.W.P.
12/13/99
1"=2000'
555
L-1
Castle Valley
140 North Cedar Hills Dr.
Price, Utah 84501
(801) 637-2567
FAX (801) 637-2582
River Gas Corporation
Section 14, T15S, R8E, S.L.B.&M.
Carbon County, Utah
Well# 14-417

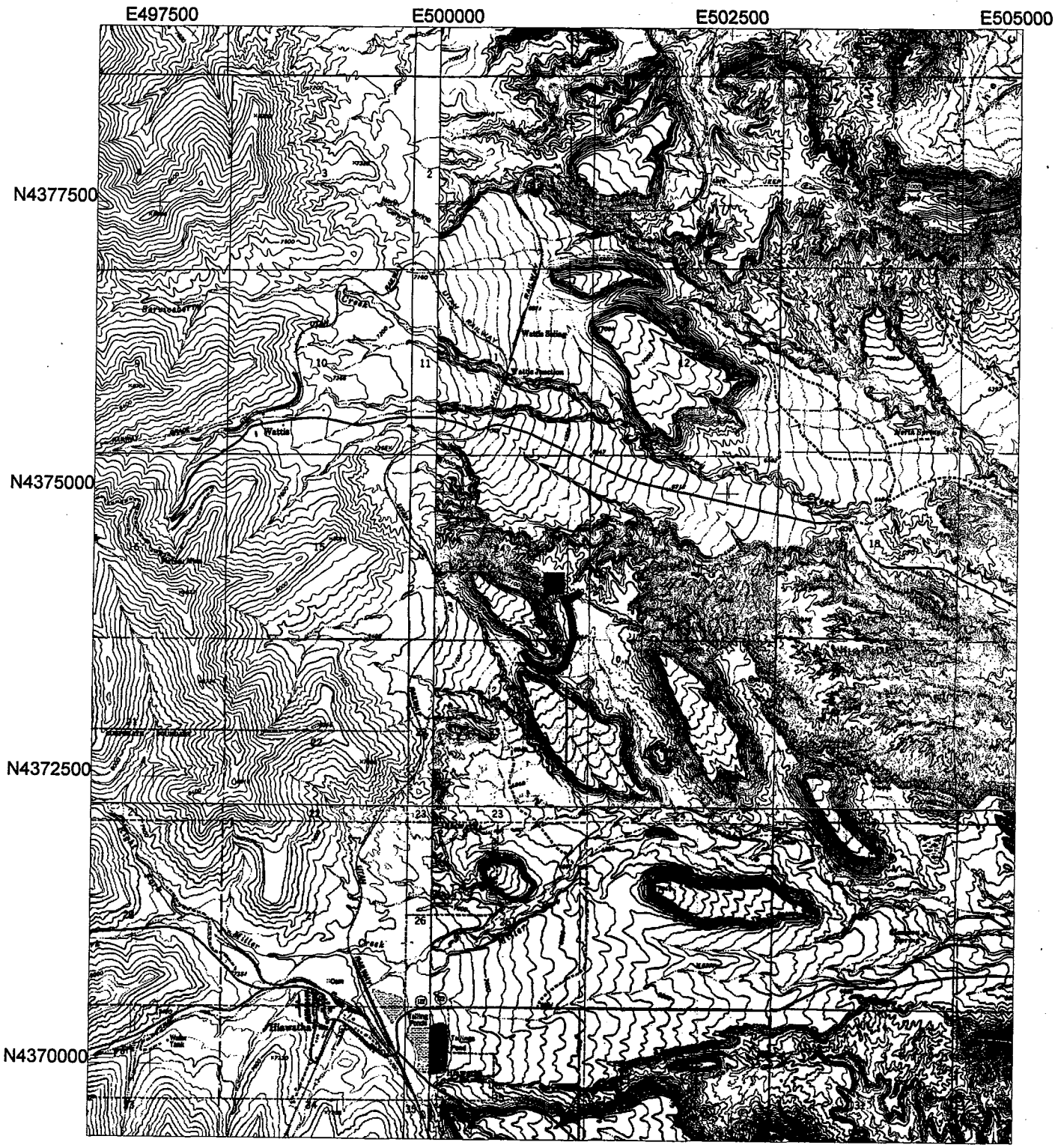

USA 14-417
Sec. 14, T15S, R8E

Universal Transverse Mercator
North 12
NAD83 (Conus)

N

Scale 1:50000
0 6000
Feet

usa14417.ssf
12/22/1999
Pathfinder Office™
Trimble

APPROXIMATE LAYOUT OF RIG & EQUIPMENT

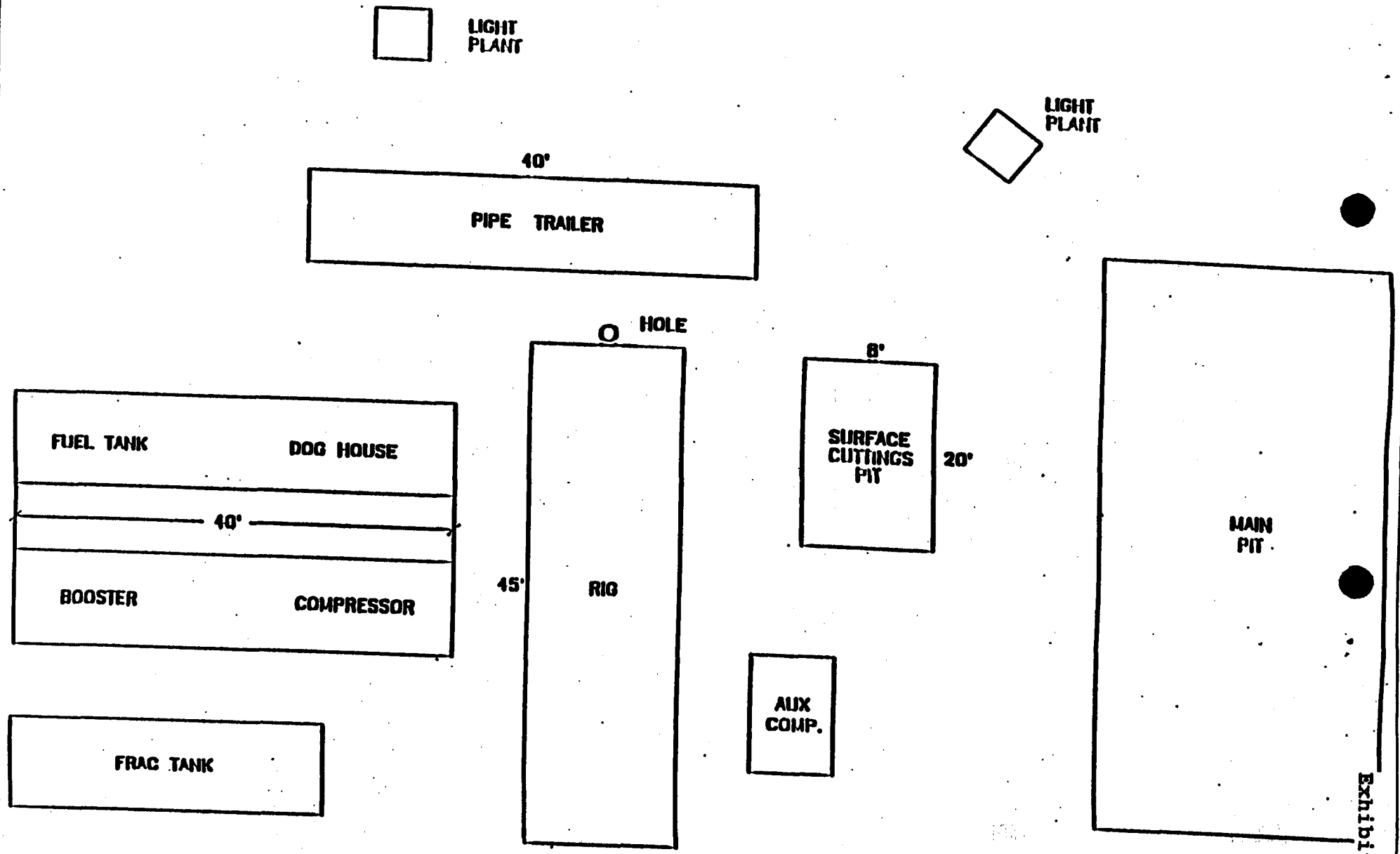

Exhibit "C"

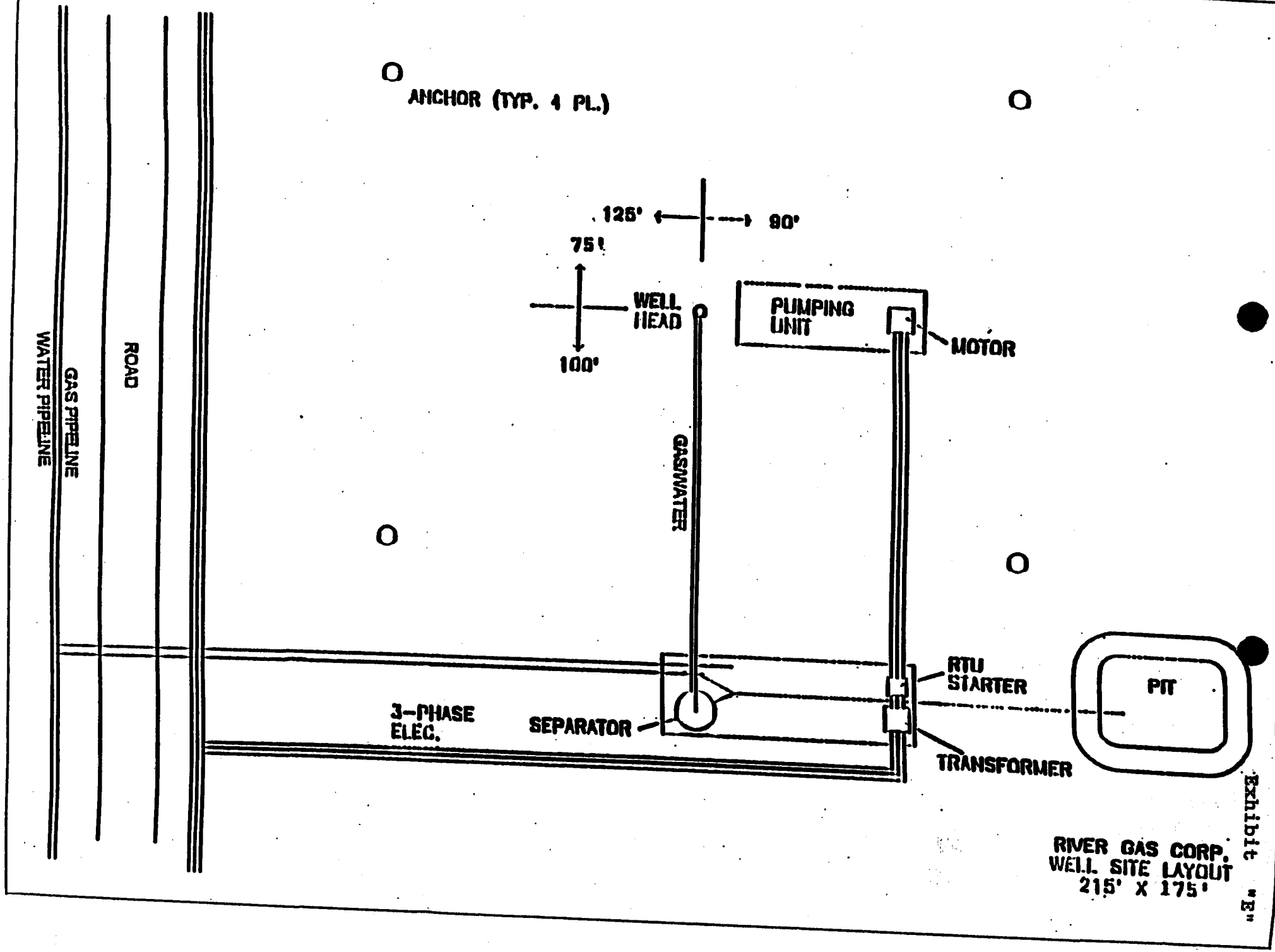

RIVER GAS CORP.
WELL SITE LAYOUT
215' X 175'

Exhibit "E"

TYPICAL ROAD CROSS-SECTION

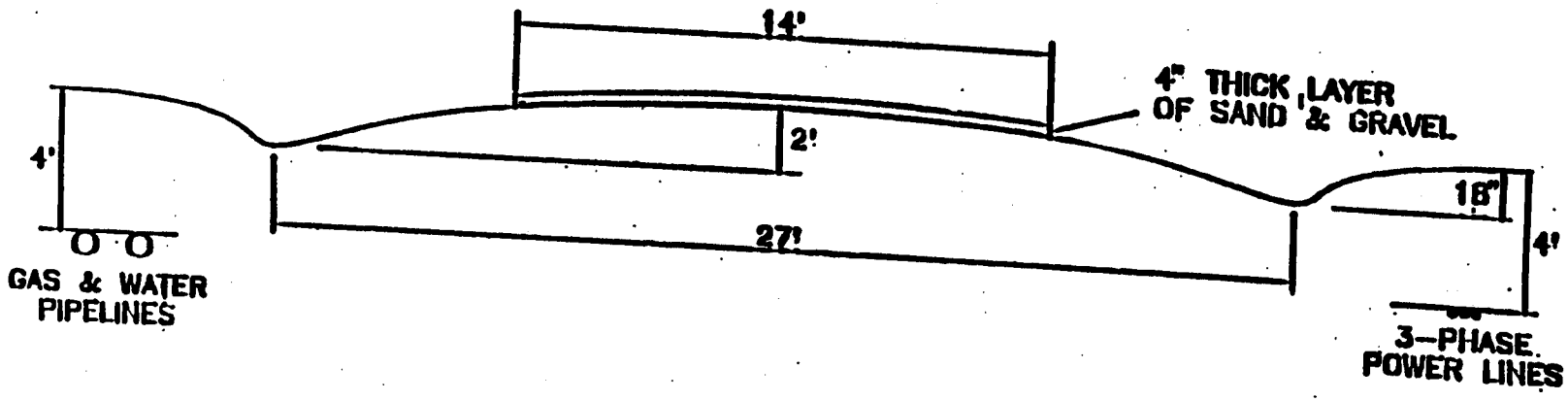

Exhibit "F"

Exhibit "G"

DIVERTER HEAD

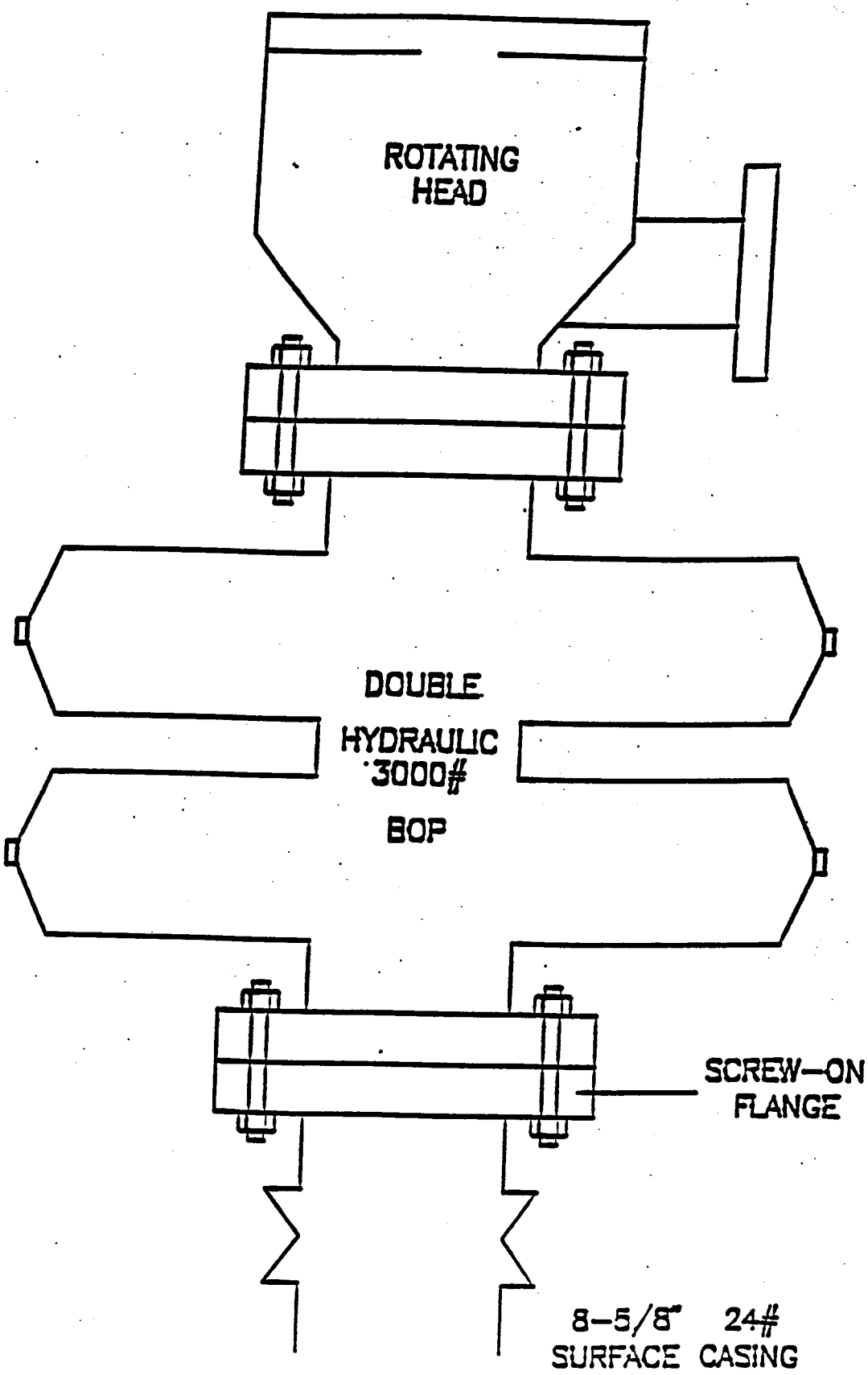

(1) 2" 5M FLANGED CHOKE
(2) 2" 5M GATE VALVE (FLANGED)
(3) 2" 5M STUDDED CROSS
(4) 2" 5M GATE VALVE (FLANGED)
(5) 2" 5M FLANGED CHOKE
(6) 2" 5M GATE VALVE (FLANGED)
(7) 2" LINE
(8) 2" 5M GATE VALVE (FLANGED)
(9) 3000# GAUGE

NOTE:
NUMBER 8 GATE VALVE SITS ON TOP OF MANIFOLD BETWEEN STUDDED CROSS AND 3000# GAUGE

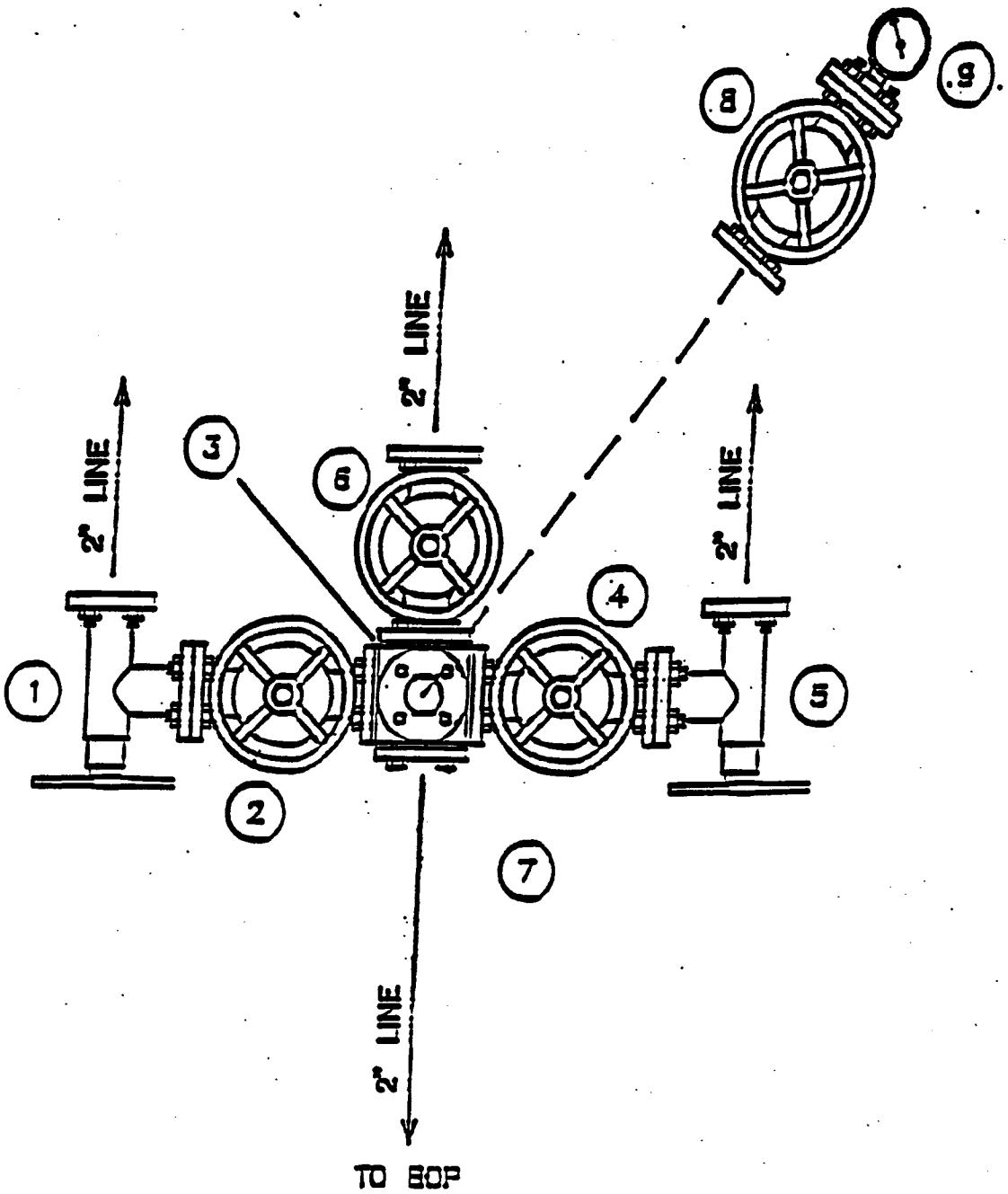

AND A NEW 2" BALL VALVE
FULL OPEN 5000PSI

MANIFOLD

WORKSHEET
APPLICATION FOR PERMIT TO DRILL

APD RECEIVED: 12/27/1999

API NO. ASSIGNED: 43-007-30647

WELL NAME: USA 14-417

OPERATOR: RIVER GAS CORPORATION (N1605)

CONTACT: JEAN SEMBORSKI

PHONE NUMBER: 435-637-8876

PROPOSED LOCATION:

NESE 14 150S 080E

SURFACE: 1741 FSL 1054 FEL

BOTTOM: 1741 FSL 1054 FEL

CARBON

UNDESIGNATED (2)

LEASE TYPE: 1-Federal

LEASE NUMBER: U-60402

SURFACE OWNER: 1-Federal

PROPOSED FORMATION: FRSD

INSPECT LOCATN BY: / /

Tech Review	Initials	Date
Engineering		
Geology		
Surface		

RECEIVED AND/OR REVIEWED:

✓ Plat

✓ Bond: Fed[1] Ind[] Sta[] Fee[]
(No. S304604)

N Potash (Y/N)

N Oil Shale (Y/N) *190 - 5 (B)

✓ Water Permit
(No. PRWID)

N RDCC Review (Y/N)
(Date:)

N/A Fee Surf Agreement (Y/N)

LOCATION AND SITING:

___ R649-2-3. Unit Drunkards Wash

___ R649-3-2. General
Siting:

___ R649-3-3. Exception

✓ Drilling Unit
Board Cause No: 243-2 (160')
Eff Date: 7-13-99
Siting: 460' fr. Unit Boundary & Uncomm. Tract

___ R649-3-11. Directional Drill

COMMENTS:

STIPULATIONS: (1) FEDERAL APPROVAL

Utah Oil Gas and Mining

Serving the Industry, Protecting the Environment

OPERATOR: RIVER GAS CORPORATION (N1605)

FIELD: UNDESIGNATED (002)

SEC. 13, 14 & 24, TWP 15 S, RNG 8 E

COUNTY: CARBON UNIT: DRUNKARDS WASH & 243-1

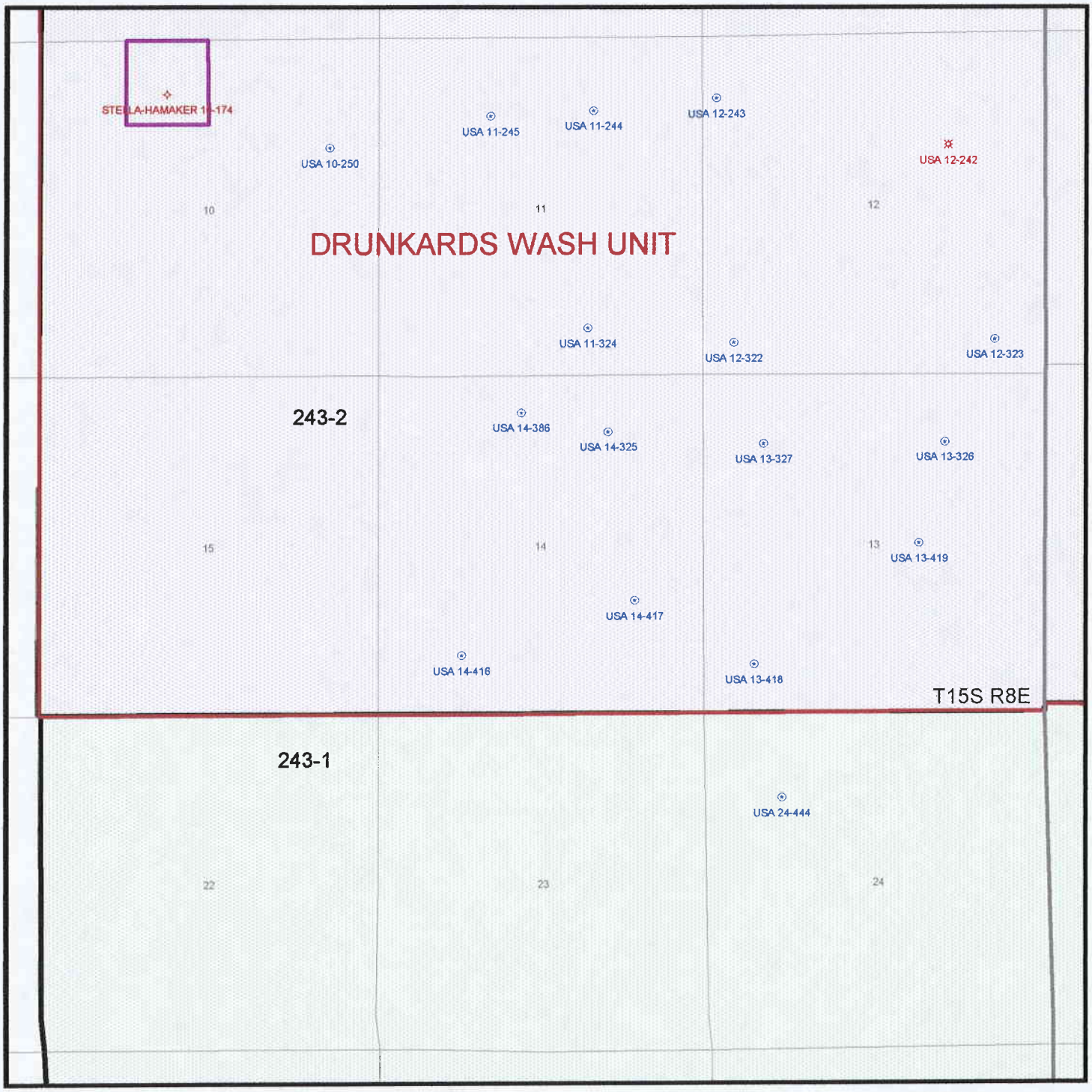

PREPARED
DATE: 29-DEC-1999

State of Utah
DEPARTMENT OF NATURAL RESOURCES
DIVISION OF OIL, GAS AND MINING

Michael O. Leavitt
Governor

Kathleen Clarke
Executive Director

Lowell P. Braxton
Division Director

1594 West North Temple, Suite 1210
PO Box 145801
Salt Lake City, Utah 84114-5801
801-538-5340
801-359-3940 (Fax)
801-538-7223 (TDD)

January 10, 2000

River Gas Corporation
1305 South 100 East
Price, UT. 84501

Re: USA 14-417 Well, 1741' FSL, 1054' FEL, NE SE, Sec. 14, T. 15 S., R. 8 E., Carbon County, Utah

Gentlemen:

Pursuant to the provisions and requirements of Utah Code Ann. 40-6-1 et seq., Utah Administrative Code R649-3-1 et seq., and the attached Conditions of Approval, approval to drill the referenced well is granted.

This approval shall expire one year from the above date unless substantial and continuous operation is underway, or a request for extension is made prior to the expiration date. The API identification number assigned to this well is 43-007-30647.

Sincerely,

John R. Baza
Associate Director

ecc
Enclosures
cc: Carbon County Assessor
Bureau of Land Management, Moab District Office

Operator: River Gas Corporation
Well Name & Number: USA 14-417
API Number: 43-007-30647
Lease: Federal **Surface Owner:** Federal
Location: NE SE **Sec.** 14 **T.** 15 S. **R.** 8 E.

Conditions of Approval

1. General

   Compliance with the requirements of Utah Admin. R. 649-1 et seq., the Oil and Gas Conservation General Rules, and the applicable terms and provisions of the approved Application for Permit to Drill.

2. Notification Requirements

   Notify the Division within 24 hours of spudding the well. Contact Carol Daniels at (801)538-5284.

   Notify the Division prior to commencing operations to plug and abandon the well. Contact Dan Jarvis at (801) 538-5338 or Robert Krueger at (801) 538-5274.

3. Reporting Requirements

   All required reports, forms and submittals shall be promptly filed with the Division, including but not limited to the Entity Action Form (Form 6), Report of Water Encountered During Drilling (Form 7), Weekly Progress Reports for drilling and completion operations, and Sundry Notices and Reports on Wells requesting approval of change of plans or other operational actions.

4. State approval of this well does not supersede the required federal approval which must be obtained prior to drilling.

Form 3160-3
(December 1990)

SUBMIT IN TRIPLICATE*
(Other instructions on reverse side)

Form approved.
Budget Bureau No. 1004-0136
Expires: December 31, 1991

UNITED STATES
DEPARTMENT OF THE INTERIOR
BUREAU OF LAND MANAGEMENT

APPLICATION FOR PERMIT TO DRILL OR DEEPEN

5. LEASE DESIGNATION AND SERIAL NO.: U-60402

6. IF INDIAN, ALLOTTEE OR TRIBE NAME: N/A

7. UNIT AGREEMENT NAME: Drunkards Wash

8. FARM OR LEASE NAME, WELL NO.: USA 14-417

9. API WELL NO.: 43-007-30647

10. FIELD AND POOL, OR WILDCAT: Drunkards Wash

11. SEC., T., R., M., OR BLK. AND SURVEY OR AREA: NE/4, SE/4, Sec.14, T15S, R8E, SLB&M

1a. TYPE OF WORK: DRILL [X] DEEPEN [ ]

b. TYPE OF WELL: OIL WELL [ ] GAS WELL [X] OTHER SINGLE ZONE [X] MULTIPLE ZONE [ ]

2. NAME OF OPERATOR: RIVER GAS CORPORATION

3. ADDRESS AND TELEPHONE NO.: 1305 So. 100 E. Price, Utah 84501 (435) 637-8876

4. LOCATION OF WELL (Report location clearly and in accordance with any State requirements.*)
At surface: 1741' FSL, 1054' FEL
At proposed prod. zone:

14. DISTANCE IN MILES AND DIRECTION FROM NEAREST TOWN OR POST OFFICE*: 11.2 miles southwest of Price, Utah.

12. COUNTY OR PARISH: Carbon

13. STATE: Utah

15. DISTANCE FROM PROPOSED* LOCATION TO NEAREST PROPERTY OR LEASE LINE, FT. (Also to nearest drlg. unit line, if any): 1720'

16. NO. OF ACRES IN LEASE: 2902 Acres

17. NO. OF ACRES ASSIGNED TO THIS WELL: 160 acres

18. DISTANCE FROM PROPOSED LOCATION TO NEAREST WELL, DRILLING, COMPLETED, OR APPLIED FOR, ON THIS LEASE, FT.: 2200'

19. PROPOSED DEPTH: 3990'

20. ROTARY OR CABLE TOOLS: Rotary

21. ELEVATIONS (Show whether DF, RT, GR, etc.): 6818' GR

22. APPROX. DATE WORK WILL START*: June 2000

23. PROPOSED CASING AND CEMENTING PROGRAM

SIZE OF HOLE	GRADE, SIZE OF CASING	WEIGHT PER FOOT	SETTING DEPTH	QUANTITY OF CEMENT
15"	12-3/4"	Conductor	40'	
11"	J-55 8-5/8"	24 #/ft	400'	155 sks G+2% CaCl + 1/4# per sack flocel
7-7/8"	N-80 5-1/2"	17 #/ft	3990'	355 sks 50/50 POZ +8%gel+2%CaCl+10%extender. 105 sks "G" thixotropic

RECEIVED
VERNAL FIELD OFFICE
1999 DEC 27 P 1:22
BUREAU OF LAND MANAGEMENT
DEPARTMENT OF THE INTERIOR

FLARING OR VENTING OF GAS IS SUBJECT TO NTL 4-A Dated 1/1/80

CONDITIONS OF APPROVAL ATTACHED

IN ABOVE SPACE DESCRIBE PROPOSED PROGRAM: If proposal is to deepen, give data present productive zone and proposed new productive zone. If proposal is to drill or deepen directionally, give pertinent data on subsurface locations and measured and true vertical depths. Give blowout preventer program, if any.

24.
SIGNED: Sean Sembowski TITLE: Permitting Specialist DATE: 12/24/99

(This space for Federal or State office use)

PERMIT NO. _____ APPROVAL DATE _____

Application approval does not warrant or certify that the applicant holds legal or equitable title to those rights in the subject lease which would entitle the applicant to conduct operations thereon.
CONDITIONS OF APPROVAL, IF ANY:

APPROVED BY: /S/ WILLIAM C. STRINGER TITLE: Assistant Field Manager, Division of Resources DATE: SEP 25 2000

***See Instructions On Reverse Side**

Title 18 U.S.C. Section 1001, makes it a crime for any person knowingly and willfully to make to any department or agency or the United States any false, fictitious or fraudulent statements or representations as to any matter within its jurisdiction.

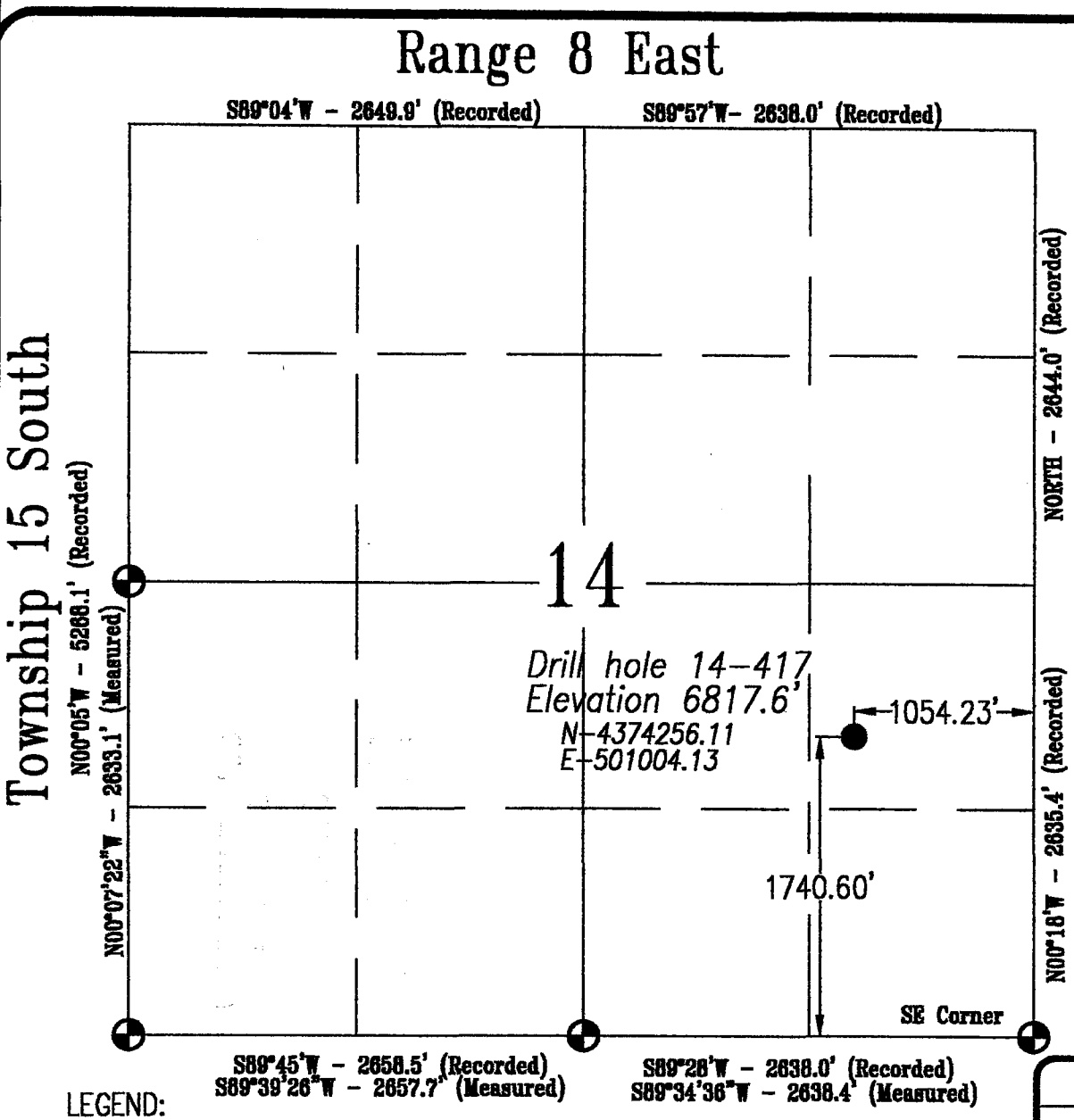

Location

The Bearings Indicated are per the recorded plat obtained from the U.S. Land Office. The well location was determined using a Trimble 4400 GPS Unit.

Basis Of Elevation:

Basis of Elevation of 6864' as indicated in the SE Corner of Section 14, Township 15 South, Range 8 East, Salt Lake Base and Meridian, as shown on the Pinnacle Peak Quadrangle 7.5 Minute Series Map.

Description of Well Point

Proposed Drill Hole located in the NE 1/4 SE1/4 of Section 14; being 1740.60' North and 1054.23' West from the SE Corner of Section 14, T15S, R8E, Salt Lake Base & Meridian.

Surveyor's Certificate:

I, Daniel W. Peatross, a Registered Licensed Land Surveyor, holding Certificate #259966, State of Utah, do hereby certify that the information on this drawing is true and accurate to the best of my knowledge and belief, and was conducted by myself, as shown hereon.

Registered Land Surveyor No. 259966 Daniel W. Peatross State of Utah

12-16-99

LEGEND:

- ● *Drill Hole Location*
- ⊕ *Found Section Corner Monumented w/ Brass Cap unless indicated otherwise.*
- ○ *Section Corner searched for but not found*

SCALE: 250' 0' 500' 1000'

DRAWN BY: P. BOYLEN	Castle Valley Services, 3206 South 125 West, Price, Utah 84501, (801) 637-8300, FAX (801) 637-2533
CHECKED BY: D.W.P.	
DATE: 12/13/99	
SCALE: 1"=1000'	
JOB NO. 555	River Gas Corporation
DRAWING NO. A-1	Well# 14-417
SHEET 1 OF 4	Section 14, T15S, R8E, S.L.B.&M.
	Carbon County, Utah

Exhibit "A" 1 of 3

River Gas Corporation
USA 14-417
Lease U-60402
Drunkards Wash Unit
NE/SE Section 14, T15S, R8E
Carbon County, Utah

CONDITIONS OF APPROVAL

Approval of this application does not warrant or certify that the applicant holds legal or equitable title to those rights in the subject lease which would entitle the applicant to conduct operations thereon.

Be advised that River Gas Corporation is considered to be the operator of the above well and is responsible under the terms and conditions of the lease for the operations conducted on the leased lands.

Bond coverage for this well is provided by UT 0829 (Principal - River Gas Corporation) via surety consent as provided for in 43 CFR § 3104.2.

This office will hold the aforementioned operator and bond liable until the provisions of 43 CFR § 3106.7-2 continuing responsibility are met.

This permit will be valid for a period of one year from the date of approval. After permit termination, a new application must be filed for approval.

All lease operations will be conducted in full compliance with applicable regulations (43 CFR § 3100), Onshore Oil and Gas Orders, lease terms, notices to lessees, and the approved plan of operations. The operator is fully responsible for the actions of his subcontractors. A copy of these conditions and the approved plan will be made available to field representatives to insure compliance.

A. DRILLING PROGRAM

1. The proposed BOPE is in a 2M configuration, and is adequate for this depth in this area. Installation, testing and operation of the system shall be in conformance with Onshore Oil and Gas Order No. 2.

2. The requirements for air drilling, found in Onshore Oil and Gas Order No. 2, part III, E (Special Drilling Operations), shall be followed. This section requires, at a minimum, the use of the following equipment not mentioned in the application:

   - Spark arresters
   - Blooie line discharge 100 feet from wellbore
   - Straight blooie line
   - Deduster equipment
   - Float valve above bit
   - Automatic igniter on the blooie line

3. Materials to counteract a gas kick shall be available on location.

4. As proposed, both casing strings shall be cemented back to surface. If cement behind the production (5½") casing does not circulate to surface, a Cement Bond Log or other appropriate tool shall be run to determine the depth to the top-of-cement.

5. Concurrent approval from the State of Utah, Division of Oil, Gas & Mining is required before conducting any surface disturbing activities.

B. SURFACE USE

1. The following appendices are attached for your reference. They are to be followed as conditions of approval:

   SM-1, Seed Mixture for Green Strip Areas
   SM-4, Seed Mixture for Final Reclamation
   BG-2, Critical Winter Range Browse Hand Planting
   BG-3, Winter Restrictions on High Value and Critical Winter Range
   Special Stipulation, Surface Disturbance Mitigation for Big Game Winter Range

2. Whether the mud pit shall be lined will be determined at the time of construction.

3. Within six months of installation, surface structures shall be painted in the following flat, earth tone color: Olive Black (5WA20-6). This Fuller O'Brien color is for reference only. Any brand of paint may be used provided the colors match. Any facilities that must be painted to comply with OSHA standards are exempt.

GENERAL CONSTRUCTION

1. Operator shall contact the Price BLM Office at least forty-eight hours prior to the anticipated start of construction and/or any surface disturbing activities. The BLM may require and schedule a preconstruction conference with the operator prior to the operator commencing construction and/or surface disturbing activities. The operator and the operator's contractor, or agents involved with construction and/or any surface disturbing activities associated with the project, shall attend this conference to review the Conditions of Approval and plan of development. The operator's inspector will be designated at the pre-drill conference, and is to be given an approved copy of all maps, permits and conditions of approval before the start of construction. The BLM will also designate a representative for the project at the preconstruction conference.

2. The operator shall designate a representative(s) who shall have the authority to act upon and to implement instructions from the BLM. The operator's representative shall be available for communication with the BLM within a reasonable time when construction or other surface disturbing activities are underway.

3. Any cultural and/or paleontological resource (historic or prehistoric site or object) discovered by the operator, or any person working on his behalf, on public land is to be immediately reported to the Price BLM Office. The operator will suspend all operations in the immediate area of such discovery until written authorization to proceed is issued by the Price BLM Office. An evaluation of the discovery will be made by the BLM to determine appropriate actions to prevent the loss of significant cultural or scientific values. The operator is responsible for the cost of evaluation of any site found during construction. The BLM will determine what mitigation is necessary.

4. During project construction, surface disturbance and vehicle travel shall be limited to the approved location and access routes. Any additional area needed must be approved by the Price BLM Office prior to use.

5. The operator must provide a trash cage for the collection and containment of all trash. The trash shall be disposed in an authorized landfill. The location and access roads shall be kept litter free.

6. Vegetation removal necessitated by construction shall be confined to the limits of actual construction. Removed vegetation will be stockpiled for use in reclamation or removed from the construction site at the direction of the BLM.

7. Prior to surface disturbance, topsoil is to be separately removed and segregated from other material. Topsoil depth will be decided onsite by BLM. If the topsoil is less than 6 inches, a 6-inch layer that includes the A horizon and the unconsolidated material immediately below the A horizon shall be removed and the mixture segregated and redistributed as the surface soil layer.

   Generally topsoil shall be stored within the pad site or adjacent to access roads. The company in consultation with BLM shall determine stockpile locations and dimensions at the onsite. If the topsoil stockpiles will not be redistributed for a period in excess of one (1) year, the stockpiles are to be seeded with seed mixture SM-4 (attached).

ROAD and PIPELINE CONSTRUCTION

8. Operator shall provide an inspector under the direction of a registered professional engineer (PE) at all times during road construction. A PE shall certify (statement with PE stamp) that the road was constructed to the required Bureau of Land Management (BLM) road standards.

9. Road construction or routine maintenance activities are to be performed during periods when the soil can adequately support construction equipment. If such

equipment creates ruts more than 6 inches deep, the soil is deemed too wet to adequately support construction equipment.

10. The operator is responsible for maintenance of all roads authorized through the lease or a right-of-way. Construction and maintenance shall comply with Class II or III Road Standards as described in BLM Manual Section 9113 and the Moab District Road Standards, except as modified by BLM. Maintenance may include but is not limited to grading, applying gravel, snow removal, ditch cleaning, headcut restoration/prevention.

11. Topsoil from access roads and pipelines is to be wind rowed along the uphill side of the road or stored in an approved manner. When the road and pipeline is rehabilitated, this soil will then be used as a top coating for the seed bed.

12. Erosion-control structures such as water bars, diversion channels, and terraces will be constructed to divert water and reduce soil erosion on the disturbed area. Road ditch turnouts shall be equipped with energy dissipators as needed to avoid erosion. Where roads interrupt overland sheet-flow and convert this runoff to channel flow, ditch turnouts shall be designed to reconvert channel flow to sheet flow. Rock energy dissipators and gravel dispersion fans may be used, or any other design which would accomplish the desired reconversion of flow regime. As necessary cut banks, road drainages, and road crossings shall be armored or otherwise engineered to prevent headcutting.

PAD CONSTRUCTION

13. During the construction of the drill pad, suitable topsoil material is to be stripped and conserved in a stockpile on the pad. If stockpiles are to remain for more than a year, they shall be seeded with the seed mixture in appendix SM-4, attached.

14. Generally, drill pads are to be designed to prevent overland flow of water from entering or leaving the site. The pad is to be sloped to drain spills and water into the reserve pit. The drill pad shall be designed to disperse diverted overland flow and to regulate flow velocity so as to prevent or minimize erosion. Well pad diversion outlets shall be equipped with rock energy brakes and gravel-bedded dispersion fans.

REHABILITATION PROCEDURES

Site Preparation

15. The entire roadbed should be obliterated and brought back to the approximate original contour. Drainage control is to be reestablished as necessary. All areas affected by road construction are to be recontoured to blend in with the existing topography. All berms are to be removed unless determined to be beneficial by BLM. In recontouring the disturbed areas, care should be taken to not disturb additional vegetation.

Seedbed Preparation

16. An adequate seedbed should be prepared for all sites to be seeded. Areas to be revegetated should be chiseled or disked to a depth of at least 12 inches unless restrained by bedrock.

17. Ripping of fill materials should be completed by a bulldozer equipped with single or a twin set of ripper shanks. Ripping should be done on 4-foot centers to a depth of 12 inches. The process should be repeated until the compacted area is loose and friable, then shall be followed by final grading. Seedbed preparation will be considered complete when the soil surface is completely roughened and the number of rocks (if present) on the site is sufficient to cause the site to match the surrounding terrain.

18. After final grading, the stockpiled topsoil shall be spread evenly across the disturbed area.

Fertilization

19. Commercial fertilizer with a formula of 16-16-8 is to be applied at a rate of 200 pounds per acre to the site. The rate may be adjusted depending on soil.

20. Fertilizer is to be applied not more than 48 hours before seeding, and shall be cultivated into the upper 3 inches of soil.

21. Fertilizer is to be broadcast over the soil using hand-operated "cyclone-type" seeders or rotary broadcast equipment attached to construction or revegetation machinery as appropriate to slope. All equipment should be equipped with a metering device. Fertilizer application is to take place before

the final seeding preparation treatment. Fertilizer broadcasting operations should not be conducted when wind velocities would interfere with even distribution of the material.

Mulching

22. When it is time to reclaim this location, the Price BLM Office will determine whether it will be necessary to use mulch in the reclamation process. The type of mulch should meet the following requirements: Wood cellulose fiber shall be natural or cooked, shall disperse readily in water, and shall be nontoxic. Mulch shall be thermally produced and air dried. The homogeneous slurry or mixture shall be capable of application with power spray equipment. A colored dye that is noninjurious to plant growth may be used when specified. Wood cellulose fiber is to be packaged in new, labeled containers. A minimum application of 1500 pounds per acre shall be applied. A suitable tackifier shall be applied with the mulch at a rate of 60 to 80 pounds per acre.

    An alternative method of mulching on small sites would be the application of straw or hay mulch at a rate of 2000 pounds per acre. Hay or straw shall be certified weed free. Following the application of straw or hay, crimping shall occur to ensure retention.

Reseeding

23. All disturbed areas are to be seeded with the seed mixture required by the BLM. The seed mixture(s) shall be planted in the fall of the year (Sept-Nov), in the amounts specified in pounds of pure live seed (PLS)/acre. There shall be no noxious weed seed in the seed mixture. Seed will be tested and the viability testing of seed shall be done in accordance with State law(s) and within 12 months prior to planting. Commercial seed will be either certified or registered seed. The seed mixture container shall be tagged in accordance with State law(s) and available for inspection by the BLM. Seed is to be planted using a drill equipped with a depth regulator to ensure proper depth of planting where drilling is possible. The seed mixture shall be evenly and uniformly planted over the disturbed area. (Smaller/heavier seeds tend to drop to the bottom of the drill and are planted first. Appropriate measures should be taken to ensure this does not occur.) Where drilling is not possible, seed is to be broadcast and the area raked or chained to cover the seed. Woody species with seeds that are too large for the drill will be broadcast. When broadcasting the seed, the pounds per acre noted below are to be increased by 50 percent. Reseeding may be required if a

satisfactory stand is not established to the surface rights owner's specifications. Evaluation of the seeding's success will not be made before completion of the second growing season after the vegetation becomes established. The Price BLM Office is to be notified a minimum of seven days before seeding a project.

24. The disturbed areas for the road and pipeline must be seeded in the fall of the year, immediately after the topsoil is replaced. The prescribed seed mixture is attached as appendix SM-4.

General

25. Prior to the use of insecticides, herbicides, fungicides, rodenticides and other similar substances, the operator must obtain from BLM, approval of a written plan. The plan must describe the type and quantity of material to be used, the pest to be controlled, the method of application, the location for storage and disposal of containers, and other information that BLM may require. A pesticide may be used only in accordance with its registered uses and within other agency limitations. Pesticides must not be permanently stored on public lands.

SM-1

Green Strip Areas

The following seed mixture will be planted along service road borrow ditches, around the edge of drill pads with a production well, and surrounding other production and maintenance facilities. The purpose for this seeding is to provide a "green strip" buffer to minimize fire hazards and prevent invasion and establishment of noxious weeds in areas that will receive continued disturbance for the life of these project areas.

Common Plant Name	Scientific Name	Pounds per acre/ PLS*
Forage kochia	Kochia prostrata	2
Wyoming big sagebrush	Artemisia tridentata wyomingensis var. Gordon Creek	1
Douglas low rabbitbrush	Chiysothamnus viscidiflorus	1
Yellow sweetclover	Melilotus officinalis	1
Small burnet	Sanguisorba minor	1
Bottlebrush squirreltail	Elymus elymoides	1
Intermediate wheatgrass	Thinopyrum intermedium	1
	Total	8

SM-4

Pinyon/Juniper Areas

BLM SEED MIXTURES FOR THE PRICE COALBED METHANE PROJECT
The following seed mixture is for areas that will receive final reclamation. Areas would be planted to protect them from soil erosion and to restore forage production.

NOTES: _____

Common Name	Scientific Name	Pounds per acre/PLS*
Grasses		
Thickspike wheatgrass	Elymus lanceolatus	1.5
Intermediate wheatgrass	Elytrigia intermedia	1.5
Squirreltail	Elymus elymoides	1
Crested wheatgrass	Agropyron desertorum	1
Western wheatgrass	Pascopyrum smithii	1
Needle-and-Thread	Stipa comata	1
Forbs		
Lewis flax	Linum perenne lewisii	1
Palmer penstemon	Penstemon palmerii	.5
Small burnet	Sanguisorba minor	1
Ladac alfalfa	Medicago sativa (Ladac)	.5
Shrubs		
Forage kochia	Kochia prostrata	1
Fourwing saltbush	Atriplex canescens	1.5
Wyoming big sagebrush	Artemisia tridentata wyomingensis var. Gordon Creek	1.5
Antelope bitterbrush	Purshia tridentata	1
True Mt. mahogany	Cercocarpus montanus	1
Whitestem rabbitbrush	Chrysothamnus nauseosus albicaulis	1
	Total	17

PRICE COALBED METHANE PROJECT AREA

PROPONENT: **River Gas Corp** **WELL #:** **USA 14-417, EA# Ut-070-2000-19**

BG-2: CRITICAL WINTER RANGE BROWSE HAND PLANTING (BLM-22)

One of the two browse species lists (checked below) are to be hand planted at the prescribed application rate and according to the following prescribed methods on critical winter range areas that are undergoing long term reclamation. This would include all pipeline corridors, berm around edge of drill pads, miscellaneous disturbed areas associated with construction such as staging areas for equipment, sidecast on road cuts, along side upgraded or new roads up to and including borrow ditch and in the termination of redundant access roads being closed. This planting shall be completed in the first planting window following completion of construction and on all other disturbed areas upon final reclamation.

Planting Methods:

Planting shall be accomplished using a labor force with specific experience in landscape restoration, hand planting methods and handling and care of browse tubling and or bareroot stock plants.

Browse plants to be utilized can be bareroot stock or tubling stock plants of 1 year old age class or greater.

Browse seedling protectors will be used to provided protection from browsing ungulates for two years. Seedling protectors will be of an open mesh rigid design that will break down when exposed to sunlight and that measures a minimum of 12 inches in length and 4 inches in diameter.

Planting shall be completed in the spring (March 1- April 1) and or fall (November 1- December 1) planting windows.

Browse plants shall be stored and handled in such a manner as to maintain viability, according to the type of browse stock being used.

Planting Species and Application Rate:

Species	[_x_] Sagebrush-Grass Plants Per Acre	[__] Pinyon-Juniper
Wyoming Sagebrush (Gordon Creek)	100	50
Fourwing Saltbush (Utah seed source collected at or above 5,000 feet elevation)	100	50
True Mountain Mahogany (Utah seed source)	0	50
Antelope Bitterbrush (Utah seed source)	0	50
Total	200	200

Suitable Substitutions:

Prostrate Kochia	yes	yes
Whitestem Rubber Rabbitbrush	no	yes
Utah Serviceberry	no	yes
Winterfat	yes	no

PRICE COALBED METHANE PROJECT AREA

PROPONENT: **River Gas Corporation** **WELL #:** **USA 14-417, EA# Ut-070-2000-19**

BG-3: WINTER RESTRICTIONS ON HIGH VALUE AND CRITICAL WINTER RANGE (BLM-37, FEIS, Chapter 2, Alternative D, pg. 2-48, see also Decision Record pg. 2 paragraph 4)

Restrictions on Construction Phase Activity: Prohibit construction phase activity, described below, on big game high value and critical winter range during the period (December 1 - April 15) without regard for land ownership.

This condition would not apply to normal maintenance and operation of producing wells, described below. On nonfederal lands (where the federal government does not have either surface or subsurface ownership) RGC would be allowed to conduct construction phase activity if needed to avoid breech of contract or loss of lease rights. In the event construction phase activity proceeds into the winter closure period on non federal interest lands, RGC would make available appropriate documentation to UDWR, upon request.

Construction Phase Activity: Construction phase activity is considered to include all work associated with initial drilling and construction of facilities through completion, including installation of pumping equipment, connection with ancillary facilities and tie-in with pipelines necessary for product delivery.

RGC would not be allowed to initiate construction activity unless it is reasonable to believe that such work can be finished to a logical stopping point prior to December 1 of that year. Specific activities considered to be covered by the seasonal closure include all heavy equipment operation including but not limited to the following:

- Mobilization/Demobilization or operation of heavy equipment (crawler tractor, front end loader, backhoe, road grader, etc.)
- Construction activity (road construction or upgrading, pad, pipeline, powerline, ancillary facilities, etc.),
- Drilling activity (operator would not propose or initiate drilling activity if the project could not reasonably be expected to be finished to a logical stopping point by the December 1 date of that year.
- Seismic operation, detonation of explosives

This seasonal closure would not apply to reconnaissance, survey/design and/or flagging of project work or other similar activity not requiring actions listed for heavy equipment operation.

Production Phase: A CBM well is considered to be in production phase when the well and ancillary facilities are completed to the point that they are capable of producing and delivering product for sale. It is noted that heavy equipment operation may be necessary in the performance of maintenance and operation of producing wells.

Restriction on Non Emergency Workover Operations: RGC is required to schedule non-emergency workover operations (defined below) on big game high value winter range outside the December 1 to April 15 date of the seasonal closure. RGC will be required to submit Sundry notices to BLM (or notification to UDWR on non-federal interest wells) in advance of workover operations proposed between December 1 and April 15. Sundry notices submitted as emergency work, may require independent corroboration by BLM geologist/petroleum engineers prior to work proceeding. Should BLM object to the emergency designation of the sundry notice, BLM would make notification of the objection within five working days of receipt of the sundry notice. In the absence of such notification or in the event of corroboration with the sundry notice, RGC would be permitted to proceed with the workover operation.

Non-emergency Workover Operations: Workover operations to correct or reverse a gradual loss of production over time (loss of production of five percent or less over a 60 day period) is considered to be routine or non-emergency workover operations and would not be permitted during the December 1 to April 15 time frame.

BG-3: WINTER RESTRICTIONS ON HIGH VALUE AND CRITICAL WINTER RANGE (BLM-37, FEIS, Chapter 2, Alternative D, pg. 2-48, see also Decision Record pg. 2 paragraph 4)

Emergency Workover Operations: Emergency work over operations are defined as downhole equipment failure problems or workover operation necessary to avoid shut in of the well or to avoid an immediate safety or environmental problem. Loss of production greater than five percent within a 60 day period is indicative of pump failure and will be treated as an emergency workover operation.

PRICE COALBED METHANE PROJECT AREA

PROPONENT: **River Gas Corporation** **WELL #:** **USA 14-417, EA# Ut-070-2000-19**

SPECIAL STIPULATION

SURFACE DISTURBANCE MITIGATION (ACRE FOR ACRE) FOR BIG GAME CRITICAL WINTER RANGE

The subject permit application is proposed within critical winter range (FEIS) and the surface disturbance associated with the project exceeds that which was analysed and mitigated for in the Price CBM FEIS. Since this surface disturbance has not been mitigated for in the EIS, the action is subject to the acre for acre mitigation for surface disturbance on critical winter range as provided for in the Price River Resource Area Management Framework Plan.

The proponent shall complete a wildlife enhancement project designed to mitigate impacts on big game critical winter range at the rate of one acre of enhancement for each acre of disturbance. Acceptable projects may include vegetative manipulation designed to increase winter forage or other winter range habitat enhancements to improve big game distribution patterns. Projects shall be completed comensurate with (during the same calander year) the surface disturbing activity.

All aspects of project design and implementation, NEPA compliance, project design and implementation shall be the responsibility of the proponent. Projects proposed by the proponent must be completed on public land and approved in advance by the Authorized Officer of the BLM.

C. REQUIRED APPROVALS, REPORTS AND NOTIFICATIONS

Required verbal notifications are summarized in Table 1, attached.

Building Location- Contact the Price Field Office, Natural Resource Protection Specialist at least 48-hours prior to commencing construction of location.

Spud- The spud date will be reported to BLM 24-hours prior to spudding. Written notification in the form of a Sundry Notice (Form 3160-5) will be submitted to the Moab Field Office within 24-hours after spudding, regardless of whether spud was made with a dry hole digger or big rig.

Daily Drilling Reports- Daily drilling reports shall detail the progress and status of the well and shall be submitted to the Moab Field Office on a weekly basis.

Monthly Reports of Operations- In accordance with Onshore Oil and Gas Order No. 1, this well shall be reported on Minerals Management Service (MMS) Form 3160, "Monthly Report of Operations," starting the month in which operations commence and continuing each month until the well is physically plugged and abandoned. This report will be filed directly with MMS.

Sundry Notices- There will be no deviation from the proposed drilling and/or workover program without prior approval. "Sundry Notices and Reports on Wells" (Form 3160-5) will be filed, with the Moab Field Office, for approval of all changes of plans and subsequent operations in accordance with 43 CFR § 3162.3-2. Safe drilling and operating practices must be observed.

Drilling Suspensions- Operations authorized by this permit shall not be suspended for more than 30 days without prior approval of the Moab Field Office. All conditions of this approval shall be applicable during any operations conducted with a replacement rig.

Undesirable Events- Spills, blowouts, fires, leaks, accidents, or any other unusual occurrences shall be immediately reported to the BLM in accordance with requirements of NTL-3A.

Cultural Resources- If cultural resources are discovered during construction, work that might disturb the resources is to stop, and the Price Field Office is to be notified.

First Production- Should the well be successfully completed for production, the Moab Field Office will be notified when the well is placed in producing status. Such notification may be made by phone, but must be followed by a sundry notice or letter not later than five business days following the date on which the well is placed into production.

A first production conference will be scheduled as soon as the productivity of the well is apparent. This conference should be coordinated through the Price Field Office. The Price Field Office shall be notified prior to the first sale.

Well Completion Report- Whether the well is completed as a dry hole or as a producer, "Well Completion and Recompletion Report and Log" (Form 3160-4) will be submitted to the Moab Field Office not later than thirty-days after completion of the well or after completion of operations being performed, in accordance with 43 CFR § 3162.4-1. Two copies of all logs, core descriptions, core analyses, well test data, geologic summaries, sample description, and all other surveys or data obtained and compiled during the drilling, workover, and/or completion operations, will be filed with Form 3160-4. When requested, samples (cuttings and/or samples) will be submitted to the Moab Field Office.

Venting/Flaring of Gas- Gas produced from this well may not be vented/flared beyond an initial, authorized test period of 30 days or 50 MMcf, whichever first occurs, without the prior, written approval of the Moab Field Office. Should gas be vented or flared without approval beyond the authorized test period, the well may be ordered shut-in until the gas can be captured or approval to continue the venting/flaring as uneconomic is granted. In such case, compensation to the lessor shall be required for that portion of the gas that is vented/flared without approval and which is determined to have been avoidably lost.

Produced Water- An application for approval of a permanent disposal method and location will be submitted to the Moab Field Office for approval pursuant to Onshore Oil and Gas Order No.7.

Off-Lease Measurement, Storage, Commingling- Prior approval must be obtained from the Moab Field Office for off-lease measurement, off-lease storage and/or commingling (either down-hole or at the surface).

Plugging and Abandonment- If the well is completed as a dry hole, plugging instructions must be obtained from the Moab Field Office prior to initiating plugging operations.

A "Subsequent Report of Abandonment" (Form 3160-5) will be filed with the Moab Field Office within thirty-days following completion of the well for abandonment. This report will indicate where plugs were placed and the current status of surface restoration. Upon completion of approved plugging, a regulation marker will be erected in accordance with 43 CFR § 3162.6. Final abandonment will not be approved until the surface reclamation work required by the approved APD or approved abandonment notice has been completed to the satisfaction of the Price Field Office or the appropriate surface managing agency.

TABLE 1

NOTIFICATIONS

Notify Don Stephens (work: 435-636-3608, home: 435-637-7967) or Mike Kaminski (work: 435-636-3640, home: 435-637-2518) of the BLM, Price Field Office for the following:

2 days prior to commencement of dirt work, construction and reclamation;

1 day prior to spudding;

50 feet prior to reaching the surface casing setting depth.

If the people at the above numbers cannot be reached, notify the Moab Field Office at (435) 259-2100. If unsuccessful, contact the person listed below.

Well abandonment operations require 24 hour advance notice and prior approval. In the case of newly drilled dry holes, verbal approval can be obtained by calling the Moab Field Office at (435) 259-2100. If approval is needed after work hours, you may contact the following:

Eric Jones, Petroleum Engineer	Office: (435) 259-2117 Home: (435) 259-2214

Form 3160-5
(June 1990)

UNITED STATES
DEPARTMENT OF THE INTERIOR
BUREAU OF LAND MANAGEMENT

FORM APPROVED
Budget Bureau No. 1004-0135
Expires: March 31, 1993

SUNDRY NOTICES AND REPORTS ON WELLS

Do not use this form for proposals to drill or to deepen or reentry to a different reservoir.
Use "APPLICATION FOR PERMIT--" for such proposals

SUBMIT IN TRIPLICATE

CONFIDENTIAL

5. Lease Designation and Serial No.
UTU-60402

6. If Indian, Allottee or Tribe Name
N/A

7. If Unit or CA, Agreement Designation
Drunkards Wash UTU-67921X

1. Type of Well
☐ Oil ☒ Gas ☐ Other

8. Well Name and No.
USA 14-417

2. Name of Operator
River Gas Corporation

9. API Well No.
43-007-30647

3. Address and Telephone No.
6825 S. 5300 W. P.O. Box 851 Price, Utah 84501 (435) 613-9777

10. Field and Pool, or Exploratory Area
Drunkards Wash

4. Location of Well (Footage, Sec.,T., R:, M., or Survey Description)
1741' FSL, 1054' FEL
NE/4, SE/4, Sec.14, T15S, R08E,SLB&M

11. County or Parish, State
Carbon County, Utah

12. **CHECK APPROPRIATE BOX(s) TO INDICATE NATURE OF NOTICE, REPORT, OR OTHER DATA**

TYPE OF SUBMISSION	TYPE OF ACTION	
☐ Notice of Intent	☒ Spud Notice	☐
☐ Subsequent Report	☐ Change of Name	☐ Change of Plans
☐ Final Abandonment Notice	☐ Recompletion	☐ New Construction
	☐ Plugging Back	☐ Non-Routine Fracturing
	☐ Casing Repair	☐ Water Shut-Off
	☐ Altering Casing	☐ Conversion to Injection
	Other _____	Dispose Water

13. Describe Proposed or Completed Operations (Clearly state all pertinent details, and give pertinent dates, including estimated date of starting any proposed work. If well is directionally drilled, give subsurface locations and measured and true vertical depths for all markers and zones pertinent to this work.)*

Please be advised that the USA 14-417 well was spud on 10/8/00 at 1:30 pm
Pense Bros. Rig #2
Dry Drill

RECEIVED
OCT 13 2000
DIVISION OF
OIL, GAS AND MINING

ORIGINAL

14. I hereby certify that the foregoing is true and correct

Signed Frankie Hathaway Title Administrative Assistant Date 10/10/00

(This space for Federal or State office use)

Approved by _____ Title _____ Date _____
Conditions of approval, if any:

Title 18 U.S.C. Section 1001, makes it a crime for any person knowingly and willfully to make to any department or agency of the United States any false, fictitious or fraudulent statements or representations as to any matter within its jurisdiction.

*** See Instructions on Reverse Side**

STATE OF UTAH
DIVISION OF OIL, GAS AND MINING

ENTITY ACTION FORM - FORM 6

OPERATOR River Gas Corporation
ADDRESS 6825 S. 5300 W. P.O. Box 851
Price, UT 84501

OPERATOR ACCT. NO. 1605

ACTION CODE	CURRENT ENTITY NO.	NEW ENTITY NO.	API NUMBER	WELL NAME	WELL LOCATION QQ	SC	TP	RG	COUNTY	SPUD DATE	EFFECTIVE DATE
A	99999	12923	43-007-30648	USA 24-444	SWNW	24	15S	08E	Carbon	10/5/00	7/1/99
WELL 1 COMMENTS: New single well, new spud outside PA and outside of Unit boundary CONFIDENTIAL 10-16-00											
A	99999	12924	43-007-30647	USA 14-417	NESE	14	15S	08E	Carbon	10/8/00	7/1/99
WELL 2 COMMENTS: New single well, new spud outside PA but inside of Unit boundary CONFIDENTIAL 10-16-00											
A	99999	12925	43-007-30713	Utah 34-456	NWNE	34	14S	08E	Carbon	10/6/00	7/1/99
WELL 3 COMMENTS: New single well, new spud outside PA and outside of Unit Boundary CONFIDENTIAL 10-16-00											
WELL 4 COMMENTS:											
WELL 5 COMMENTS:											

ORIGINAL

ACTION CODES (See Instructions on back of form)
- A - Establish new entity for new well (single well only)
- B - Add new well to existing entity (group or unit well)
- C - Re-assign well from one existing entity to another existing entity
- D - Re-assign well from one existing entity to a new entity
- E - Other (explain in comments section)

NOTE: Use COMMENT section to explain why each Action Code was selected.

(3/89)

RECEIVED
OCT 13 2000
DIVISION OF
OIL, GAS AND MINING

Frankie Hathaway *Frankie Hathaway*
Signature

Administrative Assistant 10/10/00
Title Date

Phone No. (435)613-9777

Form 3160-5
(June 1990)

UNITED STATES
DEPARTMENT OF THE INTERIOR
BUREAU OF LAND MANAGEMENT

FORM APPROVED
Budget Bureau No. 1004-0135
Expires: March 31, 1993

SUNDRY NOTICES AND REPORTS ON WELLS

Do not use this form for proposals to drill or to deepen or reentry to a different reservoir.
Use "APPLICATION FOR PERMIT--" for such proposals

SUBMIT IN TRIPLICATE

CONFIDENTIAL

5. Lease Designation and Serial No.
U-60402

6. If Indian, Allottee or Tribe Name
N/A

7. If Unit or CA, Agreement Designation
Drunkards Wash UTU-67921X

1. Type of Well
☐ Oil ☒ Gas ☐

8. Well Name and No.
USA 14-417

2. Name of Operator
River Gas Corporation

9. API Well No.
43-007-30647

3. Address and Telephone No.
6825 S. 5300 W. P.O. Box 851 Price, Utah 84501 (435) 613-9777

10. Field and Pool, or Exploratory Area
Drunkards Wash

4. Location of Well (Footage, Sec.,T., R:, M., or Survey Description)
1741' FSL, 1054' FEL
NE/4,SE/4, Sec.14, T15S,R08E, SLB&M

11. County or Parish, State
Carbon County, Utah

12. **CHECK APPROPRIATE BOX(s) TO INDICATE NATURE OF NOTICE, REPORT, OR OTHER DATA**

TYPE OF SUBMISSION	TYPE OF ACTION	
☐ Notice of Intent	☒ Well Report	☐
☐ Subsequent Report	☐ Change of Name	☐ Change of Plans
☐ Final Abandonment Notice	☐ Recompletion	☐ New Construction
	☐ Plugging Back	☐ Non-Routine Fracturing
	☐ Casing Repair	☐ Water Shut-Off
	☐ Altering Casing	☐ Conversion to Injection
	Other _____	Dispose Water

13. Describe Proposed or Completed Operations (Clearly state all pertinent details, and give pertinent dates, including estimated date of starting any proposed work. If well is directionally drilled, give subsurface locations and measured and true vertical depths for all markers and zones pertinent to this work.)*

See Attached.

COPY

14. I hereby certify that the foregoing is true and correct

Signed Frankie Hathaway Title Administrative Assistant Date 10/19/00

(This space for Federal or State office use)

Approved by _____ Title _____ Date _____
Conditions of approval, if any:

Title 18 U.S.C. Section 1001, makes it a crime for any person knowingly and willfully to make to any department or agency of the United States any false, fictitious or fraudulent statements or representations as to any matter within its jurisdiction.

* See Instructions on Reverse Side

DRUNKARDS WASH PROJECT
DAILY WELL REPORT

CONFIDENTIAL

USA **14-417**

API NO: 4300730647

1741' FSL, 1054' FEL
NESE SEC: 14 TWN: 15S RNG: 08E
COUNTY: Carbon
ELEVATION: 6818
DRILLING CONTRACTOR: Pense Brothers Rig #2

SPUD TIME/DATE: 10/8/00 1:30:00 PM
TD TIME/DATE: 10/10/00 4:40:00 AM
TD DEPTH: 3740
ON-LINE TIME/DATE:

Bit Information

Type	Size	In	Out	Hours	Rotating Hours
Air Hammer	15 in	0.00	15.00	2	1
Air Hammer	11 in	15.00	430.00	5	4
Air Hammer	7 7/8	430.00	2810.00	23	19
Tri-cone	7 7/8in	2810.00	3740.00	19	18.5
	15 in				

Conductor Casing

Bore Hole Size: 15 in Conductor From: 0.00 To: 15.00

Casing Description: 12 3/4in PE Number of Joints: 1 Set @: 14.00

Cement: Amount:

Cement Report:

Surface Casing

Bore Hole Size: 11 in Surface Casing From: 15.00 To: 430.00

Casing Description: 8 5/8 in 24#/ft J-55 Number of Joints: 13 Set @: 408.00

Cement: G + 2%S-1 + 1/4#/sk D-29 Amount: 185.00

Cement Report: rigged up haliburton, safety meeting, tested lines, pumped water to role hole, & 10 bbl gell pill, 10 bbl water spacer, & 185 sks of G cement, displaced with 24 bbls of water, with 11 bbls of returns, shut valve @ 12:15 am.

Production Casing

Bore Hole Size: 7 7/8 in Prod.Casing From: 0.00 To: 3706.00

Casing Description: 5 1/2 in 17#/ft N-80 Number of Joints: 89 Length: 3706.00

Lead Cement: 50/50 POZ, 8%D20, 10%D44, 2%S001, 1/4#/sk D29 Amount: 380.00

Tail Cement: 10-1 RFC Amount: 90.00

Cement Report: rigged up haliburton & pumped 85 bbls of water, 10 bbl gel pill with extra flake, 10 bbls water spacer, then 380 sks of 50/50 poz & 90 sks of rfc displaced with 85 bbls of water with no returns, lost circulation @ 40 bbls into displacement.

Float Equipment: 5 1/2 float shoe Centralizers ran on: 2,5,9,13,21,

CONFIDENTIAL

Drilling Data

DAY 1 10/8/00

CURRENT DEPTH: 430 CURRENT OPERATIONS: bop test ROTATING HRS: 5.00

7am-12pm moved on location & rigged up, 12pm-1pm serviced rig, 1pm-2pm started drilling conductor (spud time 1:30pm), 2pm-3pm set 14 ft of conductor, 3pm-4pm drilling 11 inch hole, 4pm-7pm @ 430 ft tripped out, 7pm-11pm run in with surface pipe & waited on cementers, 11pm-12am hooked up cementers & pumped cement closed valve @ 12am, 12am-4am waiting on cement to set up, 4am-6am break loose @ 4am installed bop, 6am-7am run blow line.

Estimated Daily Cost: [redacted]

DAY 2 10/9/00

CURRENT DEPTH: 2720 CURRENT OPERATIONS: drilling ROTATING HRS: 18.0

7am-8am run two inch line pipe from manifold, 8am-10am bop test, 10am-11am set up to drill & changed bits, 11am-12pm drilling 11 inch hole, 12pm-4pm @ 890, 4pm-7pm @ 1250, 7pm-10pm @ 1580, 10pm-1am @ 1970, 1am-4am @ 2360, 4am-7am @ 2720.

Estimated Daily Cost: [redacted]

DAY 3 10/10/00

CURRENT DEPTH: 3740 CURRENT OPERATIONS: mud job ROTATING HRS: 19.5

7am-drill to 2810ft, 8am-8:30am clean hole, 8:30am-10:45am tooh, 10:45am-12pm change bits, tih w/ collars, 12pm-3pm finish tih, 3pm-4pm condition hole, 4pm-5pm drill 2810-2900ft, 4pm-7pm drill 2900-3110ft, 7pm-12am drill 3110-3440ft, 12am-4:40am drill 3440-3740ft, td @ 4:40am 10/10/00, 4:40am-5:30am clean hole, 5:30am-7am pooh to check valve, tih to top of ferron,

Estimated Daily Cost: [redacted]

DAY 4 10/11/00

CURRENT DEPTH: 3740 CURRENT OPERATIONS: moving off location, ROTATING HRS: 0.00

7am-10ammix & pump 5 tubs mud, 10am-10:45am circulate on bottom, 10:45am-1pm circulate on bottom, 1pm-2pm short trip, 2pm-3:30pm circulate on bottom, 3:30pm-8pm tooh, 8pm-8:15pm r/up loggers, 8:15pm-11:30pm log well, r/down loggers, release rig @ 11:30pm 10/10/00, 11:30pm-7am r/down & prep to move off location,

Estimated Daily Cost: [redacted]

DAY 5 10/12/00

CURRENT DEPTH: 3740 CURRENT OPERATIONS: none ROTATING HRS: 0.00

7am-12pm move off location,

Estimated Daily Cost: [redacted]

DAY 6 10/13/00

CURRENT DEPTH: 3740 CURRENT OPERATIONS: running 5 1/2 casing ROTATING HRS: 0.00

spotted up rig set pipe racks unloaded pipe took off tthread protectors rigged up rig shut down for night.

Estimated Daily Cost: [redacted]

DAY 7 10/14/00

CURRENT DEPTH: 3740 CURRENT OPERATIONS: none ROTATING HRS: 0.00

took off thread protectors, talley pipe started in hole, landed casing @ 3706.49rigged up haliburton & pumped 380 sks of lead & 90 sks of tail displaced with 85 bbls of water lost circulation @ 40 bbls into displacement, rigged down haliburton, nippled down bop, & rigged down rig & moved.

Estimated Daily Cost: [redacted]

DAY 8 10/17/00

CURRENT DEPTH: 3740 CURRENT OPERATIONS: scraper run ROTATING HRS: 0.00

rigged up rig spotted in tubing trailer, picked up 4 3/4 scraper tripped in with 40 jts. Shut down for night.

Estimated Daily Cost: [redacted]

Form 3160-4
(November 1983)
(formerly 9-330)

UNITED STATES
DEPARTMENT OF THE INTERIOR
BUREAU OF LAND MANAGEMENT

SUBMIT IN DUPLICATE
(See other Instructions on reverse side)

Form approved.
Budget Bureau No.1004-0137
Expires August 31,1985

WELL COMPLETION OR RECOMPLETION REPORT AND LOG*

1a. TYPE OF WELL: OIL WELL ☐ GAS WELL ☒ DRY ☐ Other

b. TYPE OF COMPLETION: NEW WELL ☒ WORK OVER ☐ DEEP-EN ☐ PLUG BACK ☐ DIFF. RESVR. ☐ Other

CONFIDENTIAL

CONFIDENTIAL PERIOD EXPIRED ON 12-14-01

2. NAME OF OPERATOR: River Gas Corporation

3. ADDRESS OF OPERATOR: 6825 S. 5300 W. P.O. Box 851 Price, Utah 84501 (435) 613-9777

4. LOCATION OF WELL (Report location clearly and in accordance with any State requirements)
At surface: 1741' FSL, 1054' FEL
At top prod. interval reported below
At total depth

5. LEASE DESIGNATION AND SERIAL NO.: UTU - 60402
6. IF INDIAN, ALLOTTEE OR TRIBE NAME: N/A
7. UNIT AGREEMENT NAME: Drunkards Wash UTU-67921X
8. FARM OR LEASE NAME: USA
9. WELL NO.: 14-417
10. FIELD AND POOL, OR WILDCAT: Drunkards Wash
11. SEC., T., R., M., OR BLOCK AND SURVEY OR AREA: NE/SE, Sec. 14,T15S,R08E,SLB&M

14. PERMIT NO.	DATE ISSUED	12. COUNTY	13. STATE
43-007-30647	1/10/00	Carbon	UTAH

15. DATE SPUDDED	16. DATE T.D. REACHED	17. DATE COMPL. (Ready to prod.)	18. ELEVATIONS (DF, REB, RT, GR, ETC.)	19. ELEV. CASINGHEAD
10/8/00	10/10/00	11/14/00	6818' GR	N/A

20. TOTAL DEPTH, MD & TVD	21. PLUG BACK T.D., MD & TVD	22. IF MULTIPLE COMPL., HOW MANY	23. INTERVALS DRILLED BY	ROTARY TOOLS	CABLE TOOLS
3740'	3706'	N/A	→	to TD	—

24. PRODUCING INTERVAL(S), OF THIS COMPLETION--TOP, BOTTOM, NAME (MD OR TVD)
Ferron Coal- Top Coal 3270' & Bottom Coal 3452'

25. WAS DIRECTIONAL SURVEY MADE: NO

26. TYPE ELECTRIC AND OTHER LOGS RUN
10-13-00 10-11-00 10-13-00
Dual Induct.Laterolog,CBL, Spect.Litho Dens.Comp.Neut.GR log

27. WAS WELL CORED: No

28. CASING RECORD (Report all strings set in well)

CASING SIZE	WEIGHT, LB./FT.	DEPTH SET (MD)	HOLE SIZE	CEMENT RECORD	AMOUNT PULLED
12-3/4"	Conductor PE	14'	15"	185sksG+2%S1,+1/4#sk D29	
8-5/8"	24#	408'	11"	380 sks 50/50poz,8%D20,10%D44,1/4#/skD20,2%S1	
5-1/2"	17#	3706'	7-7/8"	90sks10-1 RFC (thixotropic)	

29. LINER RECORD

SIZE	TOP (MD)	BOTTOM (MD)	SACKS CEMENT	SCREEN (MD)

30. TUBING RECORD

SIZE	DEPTH SET (MD)	PACKER SET
2-7/8"	3525'	

31. PERFORATION RECORD (Interval, size and number)
Ferron Coal:
Upper: [redacted]3274', 3282'-3288', 3296'-3302' 4spf .88"
Middle: 3314'-3322', 3325'-3327', 3329'-3332', 3354'-3357' 4spf .88"
Lower: 3377'-3381', 3385'-3387', 3389'-3394', 3438'-[redacted] 4spf .88"

32. ACID, SHOT, FRACTURE, CEMENT SQUEEZE,ETC.

DEPTH INTERVAL (MD)	AMOUNT AND KIND OF MATERIAL USED
Upper: 3270'-3302'	28,400#, 20/40; 52,900#, 16/30; 39,674 gal fluid
Middle: 3314'-3357'	31,000#, 20/40; 50,000#, 16/30; 40,670 gal fluid
~~Lower: 3377'-3452'~~	~~30,000#, 20/40; 41,000#, 16/30; 36,110 gal fluid~~

33. PRODUCTION

DATE FIRST PRODUCTION	PRODUCTION METHOD (Flowing, gas lift, pumping---size and type of pump)	WELL STATUS (Producing or shut-in)
11/18/00	Pumping 2-1/2x2x16 RWAC	Producing

DATE OF TEST	HOURS TESTED	CHOKE SIZE	PROD'N. FOR TEST PERIOD	OIL---BBL.	GAS---MCF.	WATER---BBL.	GAS-OIL RATIO
11/18/00	24	N/A	→	N/A	1193	1436	N/A

FLOW. TUBING PRESS.	CASING PRESSURE	CALCULATED 24-HOUR RATE	OIL---BBL.	GAS---MCF.	WATER---BBL.	OIL GRAVITY - API (CORR.)
58	62	→	N/A	1193	1436	N/A

34. DISPOSITION OF GAS (Sold,used for fuel, vented, etc.): SOLD

TEST WITNESSED BY: Jerry H. Dietz

COPY

35. LIST OF ATTACHMENTS

RECEIVED

36 I hereby certify that the foregoing and attached information is complete and correct as determined from all available records

SIGNED Jean Semborski TITLE Permit Specialist DATE 12/12/00

DEC 18 2000

See Spaces for Additional Data on Reverse Side

DIVISION OF
OIL, GAS AND MINING

WELL NUMBER: USA 14-417

37 SUMMARY OF POROUS ZONES: (Show all important zones of porosity and contents thereof; cored intervals; and all drill-stem, tests, including depth interval tested, cushion used, time tool open, flowing and shut-in pressures, and recoveries):

FORMATION	TOP	BOTTOM	DESCRIPTION, CONTENTS, ETC.
Ferron	3272'	3444'	Coals and Sandstones Coal Interval: 3272'-3444'

38. GEOLOGIC MARKERS

NAME	TOP MEAS.DEPTH	TRUE VERT. DEPTH
Blue Gate Bentonite	3106'	
Tununk Shale	3566'	
Ferron Sandston	3268'	

Division of Oil, Gas and Mining

OPERATOR CHANGE WORKSHEET

ROUTING		
1. GLH		4-KAS ✓
2. CDW ✓		5-~~SJ~~ ✓
3. JLT		6-FILE

Enter date after each listed item is completed

Change of Operator (Well Sold) — Designation of Agent

Operator Name Change (Only) — **X Merger**

The operator of the well(s) listed below has changed, effective: **12-31-2000**

FROM: (Old Operator):	**TO:** (New Operator):
RIVER GAS CORPORATION	PHILLIPS PETROLEUM COMPANY
Address: 6825 S. 5300 W. P. O. BOX 851	Address: P. O. BOX 3368
PRICE, UT 84501	ENGLEWOOD, CO 80155-3368
Phone: 1-(435)-613-9777	Phone: 1-(720)-344-4984
Account N1605	Account N1475

CA No. **Unit: DRUNKARDS WASH**

WELL(S)

NAME	API NO.	ENTITY NO.	SEC. TWN RNG	LEASE TYPE	WELL TYPE	WELL STATUS
USA 13-470	43-007-30706	12947	13-14S-08E	FEDERAL	GW	P
USA 13-447	43-007-30707	12949	13-14S-08E	FEDERAL	GW	P
USA 23-423	43-007-30611	12912	23-14S-08E	FEDERAL	GW	P
USA 24-446	43-007-30708	12935	24-14S-08E	FEDERAL	GW	P
USA 34-434	43-007-30621	12896	34-14S-08E	FEDERAL	GW	P
USA 35-396	43-007-30584	12843	35-14S-08E	FEDERAL	GW	P
USA 35-397	43-007-30585	12834	35-14S-08E	FEDERAL	GW	P
USA 6-306	43-007-30492	12932	06-14S-09E	FEDERAL	GW	P
USA 07-436	43-007-30630	12931	07-14S-09E	FEDERAL	GW	P
USA 03-442	43-007-30710	12942	03-15S-08E	FEDERAL	GW	P
USA 13-418	43-007-30645	12933	13-15S-08E	FEDERAL	GW	P
USA 13-419	43-007-30631	12898	13-15S-08E	FEDERAL	GW	P
USA 14-386	43-007-30634	12887	14-15S-08E	FEDERAL	GW	P
USA 14-416	43-007-30646	12941	14-15S-08E	FEDERAL	GW	P
USA 14-417	43-007-30647	12924	14-15S-08E	FEDERAL	GW	P
USA 24-443	43-007-30651	12936	24-15S-08E	FEDERAL	GW	P
USA 24-444	43-007-30648	12923	24-15S-08E	FEDERAL	GW	P
USA 24-448	43-007-30652	12934	24-15S-08E	FEDERAL	GW	P

OPERATOR CHANGES DOCUMENTATION

1. (R649-8-10) Sundry or legal documentation was received from the **FORMER** operator on: 01/29/2001
2. (R649-8-10) Sundry or legal documentation was received from the **NEW** operator on: 01/29/2001
3. The new company has been checked through the **Department of Commerce, Division of Corporations Database on:** 02/15/2001

4. Is the new operator registered in the State of Utah: YES Business Number: 562960-0143

5. If **NO**, the operator was contacted contacted on: _____

6. **Federal and Indian Lease Wells:** The BLM and or the BIA has approved the (merger, name change, or operator change for all wells listed on Federal or Indian leases on: 01/30/2001

7. **Federal and Indian Units:** The BLM or BIA has approved the successor of unit operator for wells listed on: N/A

8. **Federal and Indian Communization Agreements ("CA"):** The BLM or the BIA has approved the operator change for all wells listed involved in a CA on: N/A

9. **Underground Injection Control ("UIC") Pro** The Division has approved UIC Form 5, **Transfer of Authority to Inject,** for the enhanced/secondary recovery unit/project for the water disposal well(s) listed on: _____

DATA ENTRY:

1. Changes entered in the **Oil and Gas Database on:** 02/21/2001

2. Changes have been entered on the **Monthly Operator Change Spread Sheet on:** 02/21/2001

3. Bond information entered in RBDMS on: N/A

4. Fee wells attached to bond in RBDMS on: N/A

STATE BOND VERIFICATION:

1. State well(s) covered by Bond No.: N/A

FEE WELLS - BOND VERIFICATION/LEASE INTEREST OWNER NOTIFICATION:

1. (R649-3-1) The **NEW** operator of any fee well(s) listed has furnished a bond: N/A

2. The **FORMER** operator has requested a release of liability from their bond on: N/A
   The Division sent response by letter on: N/A

3. (R649-2-10) The **FORMER** operator of the Fee wells has been contacted and informed by a letter from the Division of their responsibility to notify all interest owners of this change on: N/A

FILMING:

1. All attachments to this form have been **MICROFILMED** on: 2-21-01

FILING:

1. **ORIGINALS/COPIES** of all attachments pertaining to each individual well have been filled in each well file on: _____

COMMENTS:

United States Department of the Interior

BUREAU OF LAND MANAGEMENT
Utah State Office
P.O. Box 45155
Salt Lake City, UT 84145-0155

In Reply Refer To:
3106
UTU-47157 et al
(UT-932)

JAN 30 2001

NOTICE

Phillips Petroleum Company Attn: W. H. Rainbolt, Rocky Mtn. Region-Land Box 1967 Houston, TX 77251-1967	:	Oil and Gas

Merger Recognized

Acceptable evidence has been filed in this office concerning the merger of River Gas Corporation into Phillips Petroleum Company with Phillips Petroleum Company being the surviving entity.

The oil and gas lease files and rights-of-way files identified on the enclosed exhibit have been noted as to the merger. The exhibit is the list supplied by the representative of the companies, and verified by our computerized records. We have not adjudicated the case files to determine if the entity affected by the merger holds an interest in the leases identified, nor have we attempted to identify leases where the entity is the operator on the ground, maintaining no vested record title or operating rights interest. We are notifying the Minerals Management Service and all applicable BLM offices of the merger by a copy of this notice. If additional documentation for a change of operator is required by our Field Offices, you will be contacted by them.

By recognition of the merger the obligor is automatically changed by operation of law from River Gas Corporation to Phillips Petroleum Company on Letter of Credit No. P-207337 (BLM Bond No. UT0829). A rider to BLM Bond No. ES0048 assuming any and all liabilities of BLM Bond No. UT0829 must be submitted for approval to the Eastern States Office, Attn: Bill Forbes, 7450 Boston Boulevard, Springfield, VA 22153. After the rider is approved, the Letter of Credit will be returned to the financial institution that issued it.

ROBERT LOPEZ

Robert Lopez
Chief, Branch of
Minerals Adjudication

Enclosure
Exhibit of Leases

RECEIVED
FEB 02 2001
DIVISION OF
OIL, GAS AND MINING

cc: Moab Field Office
Vernal Field Office
Price Field Office
MMS–Reference Data Branch, MS 3130, P.O. Box 5860, Denver, CO 80217
State of Utah, DOGM, Attn: Jim Thompson (Ste. 1210), Box 145801, SLC, UT 84114
The Chase Manhattan Bank, Attn: Standby Letter of Credit Dept., 4 Chase Metrotech Center, 8th Floor
Brooklyn, NY 11245
Teresa Thompson (UT-931)
LaVerne Steah (UT-942)
Pruitt, Gushee & Bachtell, Attn: Frederick M. MacDonald, Suite 1850 Beneficial Life Tower,
Salt Lake City, Utah 84111-1495
BLM, Eastern States Office (Attn: Bill Forbes)

RGC/Phillips Merger

List of Affected BLM Leases and Rights-of-Way

A. Oil & Gas Leases

UTU-47157	UTU-70219	UTU-75016
UTU-49631	UTU-70400	UTU-75019
UTU-50645	UTU-71390	UTU-75021
UTU-51584	UTU-72003	UTU-75022
UTU-53872	UTU-72004	UTU-76332
UTU-57821	UTU-72350	UTU-76334
UTU-60402	UTU-72355	UTU-77351
UTU-60925	UTU-72358	UTU-77353
UTU-61154	UTU-72377	UTU-77354
UTU-61155	UTU-72470	UTU-78408
UTU-61158	UTU-72477	UTU-78409
UTU-61547	UTU-72624	UTU-78410
UTU-61548	UTU-72723	UTU-78411
UTU-62145	UTU-72724	UTU-78412
UTU-62276	UTU-72746	UTU-78413
UTU-65298	UTU-73004	UTU-78782
UTU-65300	UTU-73075	UTU-78783
UTU-65302	UTU-73330	UTU-79150
UTU-65303	UTU-73331	UTU-79151
UTU-67621	UTU-73523	UTU-79152
UTU-67839	UTU-73752	UTU-79153
UTU-67906	UTU-73884	UTU-79154
UTU-68314	UTU-74376	UTU-79155
UTU-69449	UTU-75015	UTU-79159

B. Rights-of-Way

UTU-73226	UTU-77141	UTU-77976
UTU-74319	UTU-77141-01	UTU-77989
UTU-74320	UTU-77151	UTU-77989-01
UTU-76610	UTU-77151-01	
UTU-76629	UTU-77154	

LAW OFFICES
PRUITT, GUSHEE & BACHTELL
SUITE 1850 BENEFICIAL LIFE TOWER
SALT LAKE CITY, UTAH 84111-1495
(801) 531-8446
TELECOPIER (801) 531-8468
E-MAIL: mail@pgblaw.com

THOMAS W. BACHTELL
A. JOHN DAVIS, III
JOHN W. ANDERSON
FREDERICK M. MACDONALD
GEORGE S. YOUNG
ANGELA L. FRANKLIN
JOHN S. FLITTON
MICHAEL S. JOHNSON
WILLIAM E. WARD

SENIOR COUNSEL:
ROBERT G. PRUITT, JR.
OLIVER W. GUSHEE, JR.

OF COUNSEL:
ROBERT G. PRUITT, III
BRENT A. BOHMAN

January 29, 2001

HAND DELIVERED

Mr. Jim Thompson
Utah Division of Oil, Gas & Mining
1594 W. North Temple
Salt Lake City, UT 84116

Re: River Gas/Phillips Merger

Dear Mr. Thompson:

As you may know, River Gas Corporation ("RGC") merged into Phillips Petroleum Company ("Phillips") effective December 31, 2000 at 11:59 p.m. I have enclosed a Certificate of Articles of Merger issued by the Utah Department of Commerce and, although duplicative, a sundry notice formally evidencing the merger for your records, and a list of all wells, including injection wells, formerly operated by RGC.

Please change the Division's records to reflect the change in operator of these wells from RGC to Phillips. All operational questions should be directed to Phillips at the following address:

Phillips Petroleum Company
Attn: Billy Stacy, Operations Manager
P.O. Box 3368
Englewood, CO 80155-3368
Telephone No.: (720) 344-4984

Phillips currently has a bond on file with the Division (a copy of which is enclosed for your reference), but I understand an $80,000 Letter of Credit is in the process of being substituted.

On behalf of Phillips, I thank you for your cooperation. Should you have any further questions or concerns, please do not hesitate to contact me.

Yours very truly,

Frederick M. MacDonald

FMM:cs
2078.16
Enclosures
cc: W. H. Rainbolt
Billy Stacy

Utah Department of Commerce
Division of Corporations & Commercial Code
160 East 300 South, 2nd Floor, Box 146705
Salt Lake City, UT 84114-6705
Phone: (801) 530-4849
Toll Free: (877) 526-3994 Utah Residents
Fax: (801) 530-6438
Web site: http://www.commerce.state.ut.us

Registration Number: 562960-0143 01/12/01
Business Name: PHILLIPS PETROLEUM COMPANY
Registered Date: JUNE 14, 1946

CERTIFICATE OF ARTICLES OF MERGER

THE UTAH DIVISION OF CORPORATIONS AND COMMERCIAL CODE ("DIVISION") HEREBY CERTIFIES THAT

ARTICLES OF MERGER WERE FILED WITH THIS OFFICE ON DECEMBER 12, 2000 MERGING RIVER GAS CORPORATION, A CORPORATION OF THE STATE OF ALABAMA, INTO PHILLIPS PETROLEUM COMPANY, THE SURVIVING CORPORATION WHICH IS OF THE STATE OF DELAWARE, AS APPEARS OF RECORD IN THE OFFICE OF THE DIVISION.

Ric Campbell
Acting Division Director of
Corporations and Commercial Code

00171151

State of Delaware

Office of the Secretary of State

Date: 12/13/2000
Receipt Number: 188532
Amount Paid: $145.00

I, EDWARD J. FREEL, SECRETARY OF STATE OF THE STATE OF DELAWARE, DO HEREBY CERTIFY THE ATTACHED IS A TRUE AND CORRECT COPY OF THE CERTIFICATE OF OWNERSHIP, WHICH MERGES:

"RIVER GAS CORPORATION", A ALABAMA CORPORATION,

WITH AND INTO "PHILLIPS PETROLEUM COMPANY" UNDER THE NAME OF "PHILLIPS PETROLEUM COMPANY", A CORPORATION ORGANIZED AND EXISTING UNDER THE LAWS OF THE STATE OF DELAWARE, AS RECEIVED AND FILED IN THIS OFFICE THE SIXTH DAY OF DECEMBER, A.D. 2000, AT 10 O'CLOCK A.M.

AND I DO HEREBY FURTHER CERTIFY THAT THE EFFECTIVE DATE OF THE AFORESAID CERTIFICATE OF OWNERSHIP IS THE THIRTY-FIRST DAY OF DECEMBER, A.D. 2000, AT 11:59 O'CLOCK A.M.

A FILED COPY OF THIS CERTIFICATE HAS BEEN FORWARDED TO THE NEW CASTLE COUNTY RECORDER OF DEEDS.

12-12-00P04:02 RCVD

State of Utah
Department of Commerce
Division of Corporations and Commercial Code
I Hereby certify that the foregoing has been filed and approved on this 12 day of Dec 20 00 in the office of this Division and hereby issue this Certificate thereof.

Examiner _____ Date 12/28/00

RIC CAMPBELL
ACTING DIRECTOR

TAB
FILED
DEC 12 2000
Utah Div. Of Corp. & Comm. Code

Edward J. Freel, Secretary of State

0064324 8100M

AUTHENTICATION: 0837738

001609453

DATE: 12-07-00

STATE OF DELAWARE
SECRETARY OF STATE
DIVISION OF CORPORATIONS
FILED 10:00 AM 12/06/2000
001609453 - 0064324

CERTIFICATE OF OWNERSHIP AND MERGER

OF

RIVER GAS CORPORATION

(an Alabama corporation)

into

Phillips Petroleum Company

(a Delaware corporation)

It is hereby certified that:

1. Phillips Petroleum Company [hereinafter sometimes referred to as the "Corporation"] is a business corporation of the State of Delaware.

2. The Corporation is the owner of all of the outstanding shares of each class of stock of River Gas Corporation, which is a business corporation of the State of Alabama.

3. The laws of the jurisdiction of organization of River Gas Corporation permit the merger of a business corporation of that jurisdiction with a business corporation of another jurisdiction.

4. The Corporation hereby merges River Gas Corporation into the Corporation.

5. The following is a copy of the resolutions adopted on November 21, 2000 by the Board of Directors of the Corporation to merge the said River Gas Corporation into the Corporation:

> "1. Phillips Petroleum Company, which is a business corporation of the State of Delaware and is the owner of all of the outstanding shares of River Gas Corporation, which is a business corporation of the State of Alabama, hereby merges River Gas Corporation into Phillips Petroleum Company pursuant to the provisions of the Alabama Business Corporation Act and pursuant to the

12-12-00P04:02 RCVD

provisions of Section 253 of the General Corporation Law of Delaware.

"2. The separate existence of River Gas Corporation shall cease at the effective time and date of the merger pursuant to the provisions of the Alabama Business Corporation Act; and Phillips Petroleum Company shall continue its existence as the surviving corporation pursuant to the provisions of Section 253 of the General Corporation Law of Delaware.

"3. The Articles of Incorporation of Phillips Petroleum Company are not amended in any respect by this Plan of Merger.

"4. The issued shares of River Gas Corporation shall not be converted or exchanged in any manner, but each said share which is issued immediately prior to the effective time and date of the merger shall be surrendered and extinguished.

"5. Each share of Phillips Petroleum Company outstanding immediately prior to the effective time and date of the merger is to be an identical outstanding share of Phillips Petroleum Company at the effective time and date of the merger.

"6. No shares of Phillips Petroleum Company and no shares, securities, or obligations convertible into such shares are to be issued or delivered under this Plan of Merger.

"7. The Board of Directors and the proper officers of Phillips Petroleum Company are hereby authorized, empowered, and directed to do any and all acts and things, and to make, execute, deliver, file, and/or record any and all instruments, papers, and documents which shall be or become necessary, proper, or convenient to carry out or put into effect any of the provisions of this Plan of Merger or of the merger herein provided for. "

" This Company approves that the effective time and date of the merger herein provided for in the State of Alabama shall be 11:59 p.m. on December 31, 2000."

"Any Vice President, the Treasurer, any Assistant Treasurer, the Secretary, any Assistant Secretary, and each of them severally, be and hereby is authorized to make, execute,

deliver, file, and/or record any and all instruments, papers, and documents which shall be or become necessary, proper, or convenient to carry out or put into effect any of the provisions of these resolutions and to do or cause to be done all such acts as are necessary to give effect to the purpose and intent of the approval herein set forth."

6. This Certificate of Ownership and Merger shall be effective at 11:59 p.m. on December 31, 2000.

Executed on November 27, 2000

Phillips Petroleum Company

N. A. Loftis

N. A. Loftis, Assistant Secretary

FORM 9

STATE OF UTAH

DIVISION OF OIL, GAS AND MINING

SUNDRY NOTICES AND REPORTS ON WELLS

Do not use this form for proposals to drill new wells, deepen existing wells, or to reenter plugged and abandoned wells.
Use APPLICATION FOR PERMIT TO DRILL OR DEEPEN form for such proposals.

5. Lease Designation and Serial Number:

6. If Indian, Allottee or Tribe Name:

7. Unit Agreement Name:

8. Well Name and Number:

9. API Well Number:

10. Field or Pool, or Wildcat:

1. Type of Well: OIL ☐ GAS ☒ OTHER:

2. Name of Operator: River Gas Corporation

3. Address and Telephone Number: 6825 S. 5300 W. P.O. Box 851 Price, Utah 84501 (435) 613-9777

4. Location of Well Footages:

QQ, Sec., T., R., M.: SLB & M

County: Carbon County

State: Utah

11. **CHECK APPROPRIATE BOXES TO INDICATE NATURE OF NOTICE, REPORT, OR OTHER DATA**

NOTICE OF INTENT
(Submit in Duplicate)

- ☐ Abandon
- ☐ Repair Casing
- ☐ Change of Plans
- ☐ Convert to Injection
- ☐ Fracture Treat or Acidize
- ☐ Multiple Completion
- ☐ New Construction
- ☐ Pull or Alter Casing
- ☐ Recomplete
- ☐ Reperforate
- ☐ Vent or Flare
- ☐ Water Shut-Off
- ☒ Other Change of Operator

Approximate date work will start _____

SUBSEQUENT REPORT
(Submit Original Form Only)

- ☐ Abandon *
- ☐ Repair Casing
- ☐ Change of Plans
- ☐ Convert to Injection
- ☐ Fracture Treat or Acidize
- ☐ Other _____
- ☐ New Construction
- ☐ Pull or Alter Casing
- ☐ Reperforate
- ☐ Vent or Flare
- ☐ Water Shut-Off

Date of work completion _____

Report results of Multiple Completions and Recompletions to different reservoirs on WELL COMPLETION OR RECOMPLETION REPORT AND LOG form.

* Must be accompanied by a cement verification report.

12. DESCRIBE PROPOSED OR COMPLETED OPERATIONS (Clearly state all pertinent details, and give pertinent dates. If well is directionally drilled, give subsurface locations and measured and true vertical depths for all markers and zones pertinent to this work.)

Please be advised that River Gas Corporation is transferring ownership of the attached list of wells to Phillips Petroleum Company 9780 Mt. Pyramid Court, Englewood, CO 80112.
Please direct all correspondence and reports to: Phillips Petroleum Company P.O. Box 3368, Englewood, CO 80155-3368.
Effective 1/1/01.

13.

Name & Signature: Cal Hurtt *Cal Hurtt* Title: Development Manager Date: 12/19/00

(This space for state use only)

(4/94) (See Instructions on Reverse Side)

Drunkards Wash Total Well Count

(Through 2000 Drilling Season)

Well #	API #	Location	Section	Tship	Range
Utah 25-09-01	4300730130	1683 FSL, 877 FEL	25	14S	09E
Utah 36-01-02	4300730178	600 FNL, 620 FEL	36	14S	09E
Utah 31-03-03	4300730143	740 FNL, 1780 FWL	31	14S	10E
Utah 36-03-04	4300730142	822 FNL, 2176 FWL	36	14S	09E
Utah 36-09-05	4300730144	2050 FSL, 700 FEL	36	14S	09E
Utah 25-07-06	4300730156	2599 FNL, 1902 FEL	25	14S	09E
Utah 25-11-07	4300730157	1718 FSL, 2210 FWL	25	14S	09E
Utah 26-16-08	4300730181	800 FSL, 750 FEL	26	14S	09E
Utah 35-01-09	4300730180	650 FNL, 850 FEL	35	14S	09E
Utah 31-12-10	4300730183	1995 FSL, 745 FWL	31	14S	10E
Utah 36-11-11	4300730184	1837 FSL, 1903 FWL	36	14S	09E
Utah 19-14-12	4300730182	860 FSL, 1780 FWL	19	14S	10E
Utah 30-05-13	4300730179	1493 FNL, 728 FWL	30	14S	10E
Utah 30-13-14	4300730185	612 FSL, 670 FWL	30	14S	10E
Utah 24-01-15	4300730191	1320 FNL, 1320 FEL	24	14S	09E
Utah 24-03-16	4300730187	1310 FNL, 1525 FWL	24	14S	09E
Utah 24-12-17	4300730208	1320 FSL, 1320 FWL	24	14S	09E
Utah 24-16-18	4300730192	482 FSL, 940 FEL	24	14S	09E
Utah 23-02-19	4300730207	963 FNL, 1470 FEL	23	14S	09E
Utah 23-04-20	4300730194	1291 FNL, 1257 FWL	23	14S	09E
Utah 23-14-21	4300730200	739 FSL, 1716 FWL	23	14S	09E
Utah 23-09-22	4300730201	1320 FSL, 1320 FEL	23	14S	09E
Utah 26-01-23	4300730205	1320 FNL, 1320 FEL	26	14S	09E
Utah 26-06-24	4300730202	1480 FNL, 2000 FWL	26	14S	09E
Utah 26-11-25	4300730204	1500 FSL, 1500 FWL	26	14S	09E
Utah 35-03-26	4300730203	1085 FNL, 1805 FWL	35	14S	09E
Utah 35-10-27	4300730197	2567 FSL, 2151 FEL	35	14S	09E
Utah 35-13-28	4300730198	1236 FSL, 1152 FWL	35	14S	09E
Utah 27-08-29	4300730193	2134 FNL, 753 FEL	27	14S	09E
Utah 27-09-30	4300730186	1359 FSL, 707 FEL	27	14S	09E
Utah 34-01-31	4300730196	464 FNL, 540 FEL	34	14S	09E
Utah 34-09-32	4300730195	1938 FSL, 435 FEL	34	14S	09E
Utah 25-04-33	4300730206	920 FNL, 780 FWL	25	14S	09E
Prettyman 10-15-34	4300730211	842 FSL, 1419 FEL	10	14S	09E
Utah 10-36	4300730302	1213 FNL, 469 FEL	10	15S	09E
Utah 12-15-37	4300730210	1158 FSL, 1494 FEL	12	15S	09E
Utah 06-38	4300730217	899 FNL, 1730 FEL	6	15S	10E
Utah 06-39	4300730218	934 FNL, 819 FWL	6	15S	10E
Utah 06-40	4300730219	2180 FSL, 1780 FEL	6	15S	10E
Utah 06-41	4300730254	2124 FSL, 1054 FWL	6	15S	10E
Utah 01-42	4300730220	860 FNL, 1780 FEL	1	15S	09E
Utah 01-43	4300730221	808 FNL, 1451 FWL	1	15S	09E
Utah 01-44	4300730222	860 FSL, 1320 FWL	1	15S	09E
Utah 01-45	4300730223	1219 FSL, 1318 FEL	1	15S	09E
Utah 02-46	4300730224	860 FNL, 860 FEL	2	15S	09E

Utah 02-47	4300730225	1318 FNL, 1791 FWL	2	15S	09E
Utah 02-48	4300730226	1780 FSL, 860 FEL	2	15S	09E
Utah 02-49	4300730227	1320 FSL, 2080 FWL	2	15S	09E
Utah 11-50	4300730228	860 FNL, 860 FEL	11	15S	09E
Utah 11-51	4300730229	1000 FNL, 1900 FWL	11	15S	09E
Utah 11-52	4300730230	1400 FSL, 1100 FEL	11	15S	09E
Utah 11-53	4300730231	1780 FSL, 1800 FWL	11	15S	09E
Utah 12-54	4300730232	875 FNL, 1015 FWL	12	15S	09E
Utah 12-55	4300730233	1500 FNL, 1320 FEL	12	15S	09E
Utah 12-56	4300730234	1500 FSL, 1320 FWL	12	15S	09E
Utah 07-57	4300730235	1421 FNL, 1003 FWL	7	15S	10E
Utah 07-58	4300730236	1495 FNL, 2006 FEL	7	15S	10E
Utah 07-59	4300730237	1400 FSL, 2100 FEL	7	15S	10E
Utah 07-60	4300730238	954 FSL, 1256 FWL	7	15S	10E
Utah 14-61	4300730239	1386 FNL, 931 FEL	14	15S	09E
Utah 14-62	4300730240	980 FNL, 1385 FWL	14	15S	09E
Utah 14-63	4300730241	1780 FSL, 1320 FEL	14	15S	09E
Utah 14-64	4300730242	907 FSL, 1392 FWL	14	15S	09E
Utah 13-65	4300730243	1320 FNL, 1200 FEL	13	15S	09E
Utah 13-66	4300730244	1276 FNL, 1301 FWL	13	15S	09E
Utah 13-67	4300730245	1800 FSL, 1500 FEL	13	15S	09E
Utah 13-68	4300730246	1320 FSL, 1320 FWL	13	15S	09E
Utah 18-69	4300730427	1320 FNL, 1320 FWL	18	15S	10E
Utah 18-70	4300730248	1110 FNL, 2127 FEL	18	15S	10E
Utah 18-71	4300730249	1764 FSL, 1767 FEL	18	15S	10E
Utah 18-72	4300730250	2100 FSL, 1100 FWL	18	15S	10E
USA 19-73	4300730392	1664 FNL, 1412 FEL	19	15S	10E
Utah 14-74	4300730529	1365 FSL, 1988 FEL	14	14S	09E
Utah 14-75	4300730263	1036 FSL, 1622 FWL	14	14S	09E
Utah 22-76	4300730251	1320 FNL, 660 FEL	22	14S	09E
Utah 19-77	4300730252	1780 FSL, 660 FWL	19	14S	10E
Williams 30-78	4300730279	460 FNL, 660 FEL	30	14S	10E
Utah 31-79	4300730253	1780 FSL, 1780 FEL	31	14S	10E
Utah 24-80	4300730255	590 FNL, 1612 FWL	24	15S	09E
Utah 24-81	4300730256	1067 FNL, 1361 FEL	24	15S	09E
Utah 32-82	4300730257	600 FNL, 2028 FEL	32	15S	09E
Utah 21-83	4300730259	1780 FNL, 460 FWL	21	15S	10E
H&A 07-84	4300730258	1780 FSL, 1780 FWL	7	15S	09E
Utah 27-85	4300730261	2173 FNL, 676 FWL	27	14S	08E
Utah 24-86	4300730267	1788 FSL, 1677 FEL	24	15S	09E
Utah 24-87	4300730375	1780 FSL, 1333 FWL	24	15S	09E
USA 15-88	4300730264	872 FSL, 875 FEL	15	14S	09E
Telonis 22-89	4300730266	836 FNL, 1766 FWL	22	14S	09E
Telonis 21-90	4300730328	1272 FNL, 1188 FEL	21	14S	09E
USA 13-91	4300730568	1443 FSL, 1017 FWL	13	14S	09E
Utah 13-92	4300730439	624 FSL, 899 FEL	13	14S	09E
Utah 18-93	4300730587	556 FSL, 673 FWL	18	14S	10E
Utah 05-95	4300730269	640 FNL, 580 FWL	5	15S	10E
Utah 05-94	4300730270	1520 FSL, 1320 FWL	5	15S	10E

Utah 05-96	4300730271	1780 FSL, 2180 FEL	5	15S	10E
Utah 08-97	4300730272	1495 FNL, 1273 FEL	8	15S	10E
Utah 08-98X	4300730285	1341 FNL, 1319 FWL	8	15S	10E
Utah 08-99	4300730274	1500 FSL, 1120 FWL	8	15S	10E
Utah 08-100	4300730275	1500 FSL, 1400 FEL	8	15S	10E
Utah 17-101	4300730416	460 FNL, 2180 FEL	17	15S	10E
Utah 17-102	4300730277	810 FNL, 910 FWL	17	15S	10E
Utah 17-103	4300730278	1520 FSL, 1120 FWL	17	15S	10E
Powell 19-104	4300730282	1327 FNL, 1458 FWL	19	15S	10E
Powell 19-105	4300730283	1239 FSL, 1325 FWL	19	15S	10E
Utah 23-106	4300730280	150 FNL, 1400 FEL	23	15S	09E
Utah 23-107	4300730281	1252 FNL, 1255 FWL	23	15S	09E
Birkinshaw 19-108	4300730284	1305 FNL, 1192 FEL	19	15S	09E
Utah 36-109	4300730268	1800 FNL, 1800 FWL	36	15S	09E
Utah 16-110	4301530250	860 FSL, 2000 FWL	16	16S	09E
Fausett 09-111	4300730428	2215 FSL, 354 FEL	9	14S	09E
Fausett 10-112	4300730415	1590 FSL, 1342 FWL	10	14S	09E
Giacoletto 11-113	4300730335	500 FSL, 2070 FWL	11	14S	09E
Prettyman 11-114	4300730340	471 FSL, 1828 FEL	11	14S	09E
Giacoletto 13-120	4300730407	1200 FNL, 1219 FWL	13	14S	09E
Giacoletto 14-121	4300730345	1200 FNL, 1060 FEL	14	14S	09E
USA 14-122	4300730404	1500 FNL, 1039 FWL	14	14S	09E
Utah 30-125	4300730262	630 FSL, 1627 FEL	30	14S	10E
Utah 31-126	4300730305	1954 FNL, 1291 FEL	31	14S	10E
Robertson 32-127	4300730374	646 FNL, 349 FWL	32	14S	10E
Utah 04-129	4300730309	700 FWL, 1850 FSL	4	15S	10E
Utah 04-130	4300730519	860 FSL, 2150 FEL	4	15S	10E
Sampinos 16-131	4300730610	1201 FNL, 1016 FWL	16	15S	10E
Jensen 16-132	4300730588	1206 FSL, 1240 FWL	16	15S	10E
LDS 17-133	4300730296	1500 FSL, 1700 FEL	17	15S	10E
Utah 25-134	4300730399	745 FNL, 1482 FWL	25	15S	09E
Utah 36-135	4300730341	850 FNL, 850 FEL	36	15S	09E
Utah 36-136	4300730343	465 FSL, 660 FWL	36	15S	09E
Utah 36-137	4300730342	2180 FSL, 1800 FEL	36	15S	09E
Utah 02-138	4301530288	638 FNL, 1865 FEL	2	16S	09E
Utah 02-139	4301530289	1890 FNL, 850 FWL	2	16S	09E
Utah 02-140	4301530290	850 FSL, 1800 FWL	2	16S	09E
Utah 02-141	4301530291	1800 FSL, 1950 FEL	2	16S	09E
Telonis 15-142	4300730319	1320 FSL, 860 FWL	15	14S	09E
Fausett 16-143	4300730320	1320 FNL, 1320 FEL	16	14S	09E
Fausett 16-144	4300730321	1800 FNL, 860 FWL	16	14S	09E
Telonis 16-145	4300730322	1320 FSL, 1320 FWL	16	14S	09E
Paar 16-146	4300730323	843 FSL, 2157 FEL	16	14S	09E
Christiansen 17-147	4300730324	860 FSL, 1800 FWL	17	14S	09E
Christiansen 17-148	4300730325	1250 FSL, 1100 FEL	17	14S	09E
Birkinshaw 18-149	4300730326	500 FSL, 500 FEL	18	14S	09E
Telonis 19-150	4300730300	751 FNL, 1840 FWL	19	14S	09E
Telonis 19-151	4300730299	860 FSL, 2000 FWL	19	14S	09E
Telonis 20-152	4300730327	1320 FNL, 1900 FEL	20	14S	09E

Telonis 21-153	4300730329	860 FNL, 1800 FWL	21	14S	09E
Telonis 29-154	4300730330	800 FNL, 1500 FWL	29	14S	09E
Telonis 29-155	4300730331	1800 FSL, 1250 FWL	29	14S	09E
Telonis 30-156	4300730301	910 FNL, 868 FEL	30	14S	09E
Telonis 30-157	4300730332	1800 FSL, 580 FEL	30	14S	09E
Utah 32-158	4300730333	1038 FNL, 1768 FEL	32	14S	09E
Utah 32-159	4300730334	2011 FNL, 1426 FWL	32	14S	09E
Utah 32-160	4300730398	1500 FSL, 1780 FWL	32	14S	09E
Utah 32-161	4300730336	415 FSL, 1408 FEL	32	14S	09E
Utah 36-162	4300730315	2053 FNL, 685 FEL	36	14S	08E
Utah 36-163	4300730316	860 FNL, 2100 FWL	36	14S	08E
Utah 36-164	4300730317	1070 FSL, 2000 FWL	36	14S	08E
Utah 36-165	4300730318	1100 FSL, 1500 FEL	36	14S	08E
Utah 02-166	4300730337	1219 FNL, 1738 FEL	2	15S	08E
Utah 02-167	4300730338	660 FNL, 2075 FWL	2	15S	08E
Utah 02-168	4300730339	1800 FSL, 2100 FWL	2	15S	08E
Utah 02-169	4300730308	754 FSL, 1000 FEL	2	15S	08E
Seamons 32-170	4300730291	700 FNL, 500 FWL	32	13S	09E
Pinnacle Peak 19-171	4300730117	1320 FSL, 1320 FEL	19	14S	09E
Telonis 20-172	4300730107	1980 FSL, 660 FEL	20	14S	09E
Powell 30-173	4300730346	1200 FNL, 1200 FWL	30	15S	10E
Stella-Hamaker 10-174	4300730116	852 FNL, 1971 FWL	10	15S	08E
Utah 31-175	4301530317	897 FNL, 1731 FWL	31	16S	09E
USA 15-176	4300730450	2588 FNL, 1155 FEL	15	14S	09E
USA 09-178	4300730419	428 FSL, 2527 FWL	9	14S	09E
USA 17-180A	4300730622	2563 FNL, 1383 FWL	17	14S	09E
USA 18-182	4300730417	1068 FSL, 1972 FWL	18	14S	09E
USA 24-183	4300730469	828 FNL, 624 FEL	24	14S	08E
Utah 27-187	4300730395	1400 FNL, 1400 FWL	27	14S	09E
Utah 27-188	4300730292	477 FSL, 518 FWL	27	14S	09E
Utah 28-189	4300730396	1707 FNL, 868 FEL	28	14S	09E
Utah 28-190	4300730397	1969 FNL, 1324 FWL	28	14S	09E
Utah 28-191	4300730293	693 FSL, 1623 FWL	28	14S	09E
Utah 28-192	4300730294	1407 FNL, 1940 FWL	28	14S	09E
Utah 29-193	4300730405	693 FNL, 1029 FEL	29	14S	09E
Utah 29-194	4300730427	951 FSL, 370 FEL	29	14S	09E
Utah 30-195	4300730265	1407 FNL, 1940 FWL	30	14S	09E
Utah 30-196	4300730344	1056 FSL, 1984 FWL	30	14S	09E
Kakatsidas 31-197	4300730420	619 FNL, 1361 FEL	31	14S	09E
Utah 31-198	4300730406	1403 FNL, 1540 FWL	31	14S	09E
Utah 31-199	4300730480	1125 FSL, 928 FWL	31	14S	09E
Utah 31-200	4300730385	2118 FSL, 549 FEL	31	14S	09E
Utah 33-201	4300730386	317 FNL, 1815 FEL	33	14S	09E
Utah 33-202	4300730387	1939 FNL, 1593 FWL	33	14S	09E
Utah 33-203	4300730388	1373 FSL, 1140 FWL	33	14S	09E
Utah 33-204	4300730389	2024 FSL, 1525 FEL	33	14S	09E
Utah 05-205	4300730384	1485 FNL, 760 FEL	5	15S	09E
Utah 05-206	4300730390	1300 FNL, 1352 FWL	5	15S	09E
Utah 06-207	4300730391	825 FNL, 928 FEL	6	15S	08E

Utah 01-208	4300730464	1246 FNL, 1831 FEL	1	15S	09E
Utah 01-209	4300730467	2271 FSL, 1251 FEL	1	15S	09E
Utah 34-211	4300730114	1181 FSL, 1005 FWL	34	14S	09E
Utah 03-212	4300730468	1187 FNL, 1761 FEL	3	15S	09E
Utah 03-213	4300730381	1466 FNL, 2041 FWL	3	15S	09E
Utah 03-214	4300730295	813 FSL, 966 FWL	3	15S	09E
Utah 03-215	4300730297	988 FSL, 604 FEL	3	15S	09E
Utah 04-216	4300730382	1610 FNL, 810 FEL	4	15S	09E
Utah 04-217	4300730383	1343 FNL, 1119 FWL	4	15S	09E
Utah 04-218	4300730418	1084 FSL, 509 FEL	4	15S	09E
Utah 10-219	4300730298	805 FNL, 756 FWL	10	15S	09E
Utah 10-220	4300730432	474 FSL, 372 FWL	10	15S	09E
Utah 10-221	4300730303	1602 FSL, 2032 FEL	10	15S	09E
USA 19-222	4300730393	1574 FSL, 1647 FEL	19	15S	10E
Utah 06-223	4300730430	1636 FSL, 1085 FEL	6	15S	09E
Utah 05-225	4300730440	421 FSL, 498 FEL	5	15S	09E
Utah 04-226	4300730408	571 FSL, 2331 FWL	4	15S	09E
Utah 09-227	4300730449	652 FNL, 1331 FEL	9	15S	09E
Utah 09-228	4300730413	1444 FNL, 1520 FWL	9	15S	09E
Utah 09-229	4300730414	1595 FSL, 2051 FWL	9	15S	09E
Utah 08-230	4300730410	2003 FNL, 960 FEL	8	15S	09E
Utah 08-231	4300730411	1321 FNL, 1738 FWL	8	15S	09E
H&A 08-232	4300730412	1135 FSL, 1497 FWL	8	15S	09E
Utah 08-233	4300730488	468 FSL, 2030 FEL	8	15S	09E
Utah 07-234	4300730409	1876 FNL, 875 FEL	7	15S	09E
Utah 07-235	4300730421	2098 FSL, 510 FEL	7	15S	09E
H&A 18-236	4300730459	896 FNL, 1511 FEL	18	15S	09E
Utah 18-237	4300730485	1867 FSL, 1920 FEL	18	15S	09E
Utah 17-238	4300730510	677 FNL, 1321 FEL	17	15S	09E
Utah 17-239	4300730511	1383 FNL, 1576 FWL	17	15S	09E
Utah 17-240	4300730512	1977 FSL, 1394 FWL	17	15S	09E
Utah 17-241	4300730513	1668 FSL, 2222 FEL	17	15S	08E
USA 12-242	4300730482	1738 FNL, 1505 FEL	12	15S	08E
USA 12-243	4300730486	950 FNL, 232 FWL	12	15S	08E
USA 11-244	4300730463	1151 FNL, 1690 FEL	11	15S	08E
USA 11-245	4300730462	1234 FNL, 1743 FWL	11	15S	08E
Utah 01-246	4300730566	1619 FNL, 170 FWL	1	15S	09E
Utah 01-247	4300730465	594 FSL, 266 FWL	1	15S	08E
USA 35-248	4300730582	828 FSL, 1245 FEL	35	15S	09E
USA 30-251	4300730403	1169 FSL, 913 FWL	30	15S	10E
Utah 25-252	4300730400	1937 FNL, 1416 FEL	25	15S	09E
Utah 25-253	4300730401	809 FSL, 899 FWL	25	15S	09E
Utah 25-254	4300730402	1787 FSL, 1954 FEL	25	15S	09E
Utah 26-255	4300730446	1209 FNL, 755 FEL	26	15S	09E
Utah 26-256	4300730445	1274 FSL, 1351 FWL	26	15S	09E
Utah 26-257	4300730444	1263 FSL, 1368 FEL	26	15S	09E
Utah 34-258	4300730552	1198 FNL, 1880 FEL	34	15S	09E
Utah 34-259	4300730456	1662 FSL, 2046 FEL	34	15S	09E
Utah 35-260	4300730447	814 FNL, 1900 FEL	35	15S	09E

Utah 35-261	4300730442	615 FNL, 818 FWL	35	15S	09E
Utah 35-262	4300730443	1657 FSL, 1850 FWL	35	15S	09E
Utah 35-263	4300730441	1785 FSL, 946 FEL	35	15S	09E
USA 01-264	4301530336	1055 FNL, 441 FWL	1	16S	09E
USA 01-265	4301530337	1739 FSL, 636 FWL	1	16S	09E
Woolstenhulme 05-266	4300730481	1389 FNL, 2179 FEL	5	15S	10E
Utah 26-267	4300730514	1836 FNL, 2130 FWL	26	15S	09E
Utah 27-268	4300730457	1125 FSL, 1682 FWL	26	15S	09E
Utah 27-269	4300730458	1661 FSL, 795 FEL	27	15S	09E
Utah 34-270	4300730347	774 FNL, 756 FWL	34	15S	09E
Utah 34-271	4300730496	1693 FSL, 965 FWL	34	15S	09E
Utah 33-272	4300730502	694 FNL, 2034 FEL	33	15S	09E
Utah 33-273	4300730493	1922 FNL, 328 FWL	33	15S	09E
Utah 33-274	4300730494	1098 FSL, 1673 FWL	33	15S	09E
Utah 33-275	4300730495	1401 FSL, 1029 FEL	33	15S	09E
Utah 32-276	4300730483	738 FL, 1318 FWL	32	15S	09E
Utah 32-277	4300730484	1613 FSL, 1931 FEL	32	15S	09E
Utah 05-278	4301530278	1665 FNL, 1923 FEL	5	15S	09E
Utah 04-279	4301530340	1020 FNL, 1757 FEL	4	16S	09E
Utah 04-280	4301530341	2087 FNL, 1627 FWL	4	16S	09E
Utah 04-281	4301530399	999 FSL, 896 FWL	4	16S	09E
Utah 04-282	4301530342	2188 FSL, 911 FEL	4	16S	09E
Utah 03-283	4301530349	461 FNL, 1772 FEL	3	16S	09E
Utah 03-284	4301530346	1218 FNL, 753 FWL	3	16S	09E
Utah 03-285	4301530345	1917 FSL, 546 FWL	3	16S	09E
Utah 03-286	4301530344	1690 FSL, 1958 FEL	3	16S	09E
USA 20-287	4300730448	1395 FNL, 979 FWL	20	15S	10E
USA 20-288	4300730451	1566 FSL, 1125 FWL	20	15S	10E
USA 30-289	4300730452	1184 FNL, 1353 FEL	30	15S	10E
USA 30-290	4300730453	1080 FSL, 1508 FEL	30	14S	10E
USA 11-291	4300730501	2609 FNL, 1994 FEL	11	14S	09E
USA 11-292	4300730500	2483 FNL, 664 FWL	11	14S	09E
USA 10-293	4300730498	2011 FNL, 847 FEL	10	14S	09E
USA 10-294	4300730497	1750 FNL, 769 FWL	10	14S	09E
USA 09-295	4300730499	696 FNL, 1198 FEL	9	14S	09E
Fausett 09-296	4300730455	2072 FNL, 798 FWL	9	14S	09E
USA 08-297	4300730491	789 FNL, 958 FEL	8	14S	09E
Ritzakis 08-298	4300730475	798 FNL, 2018 FWL	8	14S	09E
Ritzakis 08-299	4300730479	2187 FSL, 1885 FWL	8	14S	09E
Ritzakis 08-300	4300730476	2485 FSL, 1522 FEL	8	14S	09E
USA 04-302	4300730489	1076 FSL, 1860 FWL	4	14S	09E
USA 04-303	4300730490	597 FSL, 984 FEL	4	14S	09E
Ritzakis 05-304	4300730473	688 FSL, 1888 FWL	5	14S	09E
Ritzakis 05-305	4300730474	1104 FSL, 1196 FEL	5	14S	09E
USA 06-306	4300730492	399 FSL, 306 FEL	6	14S	09E
Helper 07-307	4300730487	672 FNL, 962 FWL	7	15S	09E
USA 31-310	4300730516	624 FNL, 1238 FWL	31	15S	10E
USA 31-311	4300730517	1934 FSL, 973 FWL	31	15S	10E
USA 01-312	4301530350	1453 FNL, 1881 FEL	1	16S	09E

USA 11-314	4301530353	1262 FNL, 1136 FWL	11	16S	09E
USA 10-317	4301530352	1221 FNL, 1104 FEL	10	16S	09E
USA 12-322	4300730576	492 FSL, 495 FWL	10	15S	08E
USA 12-323	4300730577	540 FSL, 784 FEL	12	15S	08E
USA 11-324	4300730575	732 FSL, 1763 FEL	11	15S	08E
USA 14-325	4300730579	890 FNL, 1469 FEL	14	15S	08E
USA 13-326	4300730581	1065 FNL, 1563 FEL	13	15S	08E
USA 13-327	4300730578	1092 FNL, 941 FWL	13	15S	08E
USA 35-328	4300730583	964 FSL, 1999 FWL	35	14S	08E
Utah 09-329	4300730561	884 FSL, 1324 FEL	9	15S	09E
Utah 06-330	4300730562	938 FNL, 1564 FWL	6	15S	09E
Utah 20-333	4300730669	1069 FNL, 1460 FEL	20	15S	09E
Utah 20-334	4300730625	932 FNL, 1655 FWL	20	15S	09E
Utah 20-335	4300730626	2152 FSL, 1716 FWL	20	15S	09E
Utah 19-337	4300730623	926 FNL, 768 FEL	19	15S	09E
Utah 19-338	4300730624	1789 FSL, 1426 FEL	19	15S	09E
Utah 05-343	4301530400	1795 FNL, 1431 FWL	5	16S	09E
Utah 05-344	4301530401	1316 FSL, 1343 FWL	5	16S	09E
Utah 05-345	4301530402	908 FSL, 1449 FEL	5	16S	09E
Utah 08-354	4301530395	1073 FNL, 1914 FEL	8	16S	09E
Utah 08-355	4301530378	1673 FNL, 850 FWL	8	16S	09E
Utah 08-356	4301530379	1701 FSL, 799 FWL	8	16S	09E
Utah 08-357	4301530380	1722 FSL, 1599 FEL	8	16S	09E
Utah 09-358	4301530300	2097 FNL, 1634 FEL	9	16S	09E
Utah 09-359	4301530407	1787 FNL, 871 FWL	9	16S	09E
Utah 09-360	4301530397	1323 FSL, 881 FWL	9	16S	09E
Utah 09-361	4301530408	1564 FSL, 1998 FEL	9	16S	09E
USA 10-362	4301530424	2225 FNL, 494 FWL	10	16S	09E
USA 14-386	4300730634	592 FNL, 2236 FWL	14	15S	08E
USA 24-387	4300730612	1243 FSL, 2306 FWL	10	14S	08E
USA 24-388	4300730613	1177 FSL, 612 FEL	24	14S	08E
Utah 25-389	4300730600	737 FNL, 1976 FEL	25	14S	08E
Utah 25-390	4300730599	1540 FNL, 1354 FWL	25	14S	08E
Utah 25-391A	4300730658	1264 FSL, 1573 FWL	25	14S	08E
Utah 25-392	4300730602	2045 FSL, 1718 FEL	25	14S	09E
USA 26-393	4300730614	1666 FNL, 874 FEL	26	14S	08E
USA 26-394	4300730615	856 FSL, 2377 FWL	26	14S	08E
USA 26-395	4300730616	1927 FSL, 830 FEL	26	14S	08E
USA 35-396	4300730584	616 FNL, 1896 FEL	35	14S	08E
USA 35-397	4300730585	949 FNL, 1264 FWL	35	14S	08E
USA 20-398	4300730590	1374 FNL, 1387 FEL	20	15S	10E
USA 20-399	4300730591	1445 FSL, 1128 FEL	20	15S	10E
Utah 09-412	4300730580	1102 FSL, 1018 FWL	9	15S	10E
Utah 09-413	4300730605	1007 FNL, 1197 FWL	9	15S	10E
Utah 10-415	4301530391	1090 FNL, 557 FEL	10	16S	08E
USA 14-416	4300730646	892 FSL, 1311 FWL	14	15S	08E
USA 14-417	4300730647	1741 FSL, 1054 FEL	14	15S	09E
USA 13-418	4300730645	737 FSL, 793 FEL	13	15S	08E
USA 13-419	4300730631	2617 FSL, 1958 FEL	13	15S	08E

USA 23-423	4300730611	408 FSL, 924 FEL	23	14S	08E
USA 34-434	4300730621	1342 FSL, 922 FEL	34	14S	08E
USA 18-435	4300730619	1868 FNL, 793 FWL	18	14S	09E
USA 07-436	4300730630	3121 FNL, 871 FEL	7	14S	09E
USA 03-442	4300730710	899 FNL, 553 FEL	3	15S	08E
USA 24-443	4300730651	1780 FNL, 2247 FEL	24	15S	08E
USA 24-444	4300730648	1338 FNL, 1153 FWL	24	15S	08E
USA 24-446	4300730708	1377 FNL, 2340 FWL	24	14S	08E
USA 13-447	4300730707	2044 FSL, 741 FEL	13	14S	08E
USA 24-448	4300730652	2146 FSL, 2021 FEL	24	15S	08E
Utah 34-456	4300730713	755 FNL, 1377 FEL	34	14S	08E
USA 13-470	4300730706	1741 FNL, 554 FEL	13	14S	08E
Utah 06-483	4300730716	2456 FSL, 988 FWL	6	15S	09E
American Quasar D1	4300730040	999 FSL, 1552 FWL	31	14S	10E
Arcadia-Telonis D2	4300730093	465 FSL, 560 FEL	19	14S	09E
Utah D3	4300730290	1600 FSL, 1530 FEL	18	15S	10E
Utah D4	4300730314	600 FNL, 500 FWL	24	14S	09E
Fausett D5	4300730351	467 FNL, 1461 FWL	16	14S	09E
Drew D6	4300730100	1300 FSL, 830 FWL	34	14S	09E
Utah D7	4301530338	1371 FSL, 1530 FEL	2	14S	09E
Utah D8	4300730431	1342 FNL, 350 FWL	12	15S	09E
Utah D9	4300730438	1960 FNL, 1487 FWL	32	14S	09E
RGC D10	4300730520	162 FNL, 1557 FEL	28	15S	09E
USA D11	4301530356	1513 FNL, 2437 FEL	13	16S	09E
Sampinos D14	4300730567	1695 FSL, 2133 FEL	16	15S	10E

FORM 9

STATE OF UTAH

DIVISION OF OIL, GAS AND MINING

ORIGINAL

SUNDRY NOTICES AND REPORTS ON WELLS

Do not use this form for proposals to drill new wells, deepen existing wells, or to reenter plugged and abandoned wells.
Use APPLICATION FOR PERMIT TO DRILL OR DEEPEN form for such proposals.

5. Lease Designation and Serial Number: UTU-60402

6. If Indian, Allottee or Tribe Name: N/A

7. Unit Agreement Name: UTU67921X Drunkards Wash

1. Type of Well: OIL ☐ GAS ☒ OTHER:

8. Well Name and Number: USA 14-417

2. Name of Operator: Phillips Petroleum Company

9. API Well Number: 43-007-30647

3. Address and Telephone Number: 6825 South 5300 West, P.O. Box 851, Price, UT 84501 (435) 613-9777

10. Field or Pool, or Wildcat: Drunkards Wash

4. Location of Well
Footages: 1741' FSL, 1054' FEL
QQ, Sec., T., R., M.: NE/SE , Sec.14, T15S, R08E, SLB&M
County: Carbon County
State: Utah

11. CHECK APPROPRIATE BOXES TO INDICATE NATURE OF NOTICE, REPORT, OR OTHER DATA

NOTICE OF INTENT
(Submit in Duplicate)

- ☐ Abandon
- ☐ Repair Casing
- ☐ Change of Plans
- ☐ Convert to Injection
- ☐ Fracture Treat or Acidize
- ☐ Multiple Completion
- ☐ Other
- ☐ New Construction
- ☐ Pull or Alter Csg
- ☐ Recomplete
- ☐ Reperforate
- ☐ Vent or Flare
- ☐ Water Shut-Off

Approximate date work will start

SUBSEQUENT REPORT
(Submit Original Form Only)

- ☐ Abandon *
- ☐ Repair Casing
- ☐ Change of Plans
- ☐ Convert to Injection
- ☐ Fracture Treat or Acidize
- ☒ Other Chemical/Flush Treatment
- ☐ New Construction
- ☐ Pull or Alter Csg
- ☐ Reperforate
- ☐ Vent or Flare
- ☐ Water Shut-Off

Date of work completion 02/04/02

Report results of Multiple Completions and Recompletions to different reservoirs on WELL COMPLETION OR RECOMPLETION REPORT AND LOG form.

* Must be accompanied by a cement verification report.

12. DESCRIBE PROPOSED OR COMPLETED OPERATIONS (Clearly state all pertinent details, and give pertinent dates. If well is directionally drilled, give subsurface locations and measured and true vertical depths for all markers and zones pertinent to this work.)

Please be advised that the above referenced well was chemically treated with 4000 gallons of low Ph fluid & 250 gallons of 15% HCL on 02/04/02.

RECEIVED
FEB 25 2002
DIVISION OF
OIL, GAS AND MINING

13.

Name & Signature: Lynnettre Allred L. Allred Title: Administrative Assistant Date: 02/04/02

(This space for state use only)

(4/94) (See Instructions on Reverse Side)

Division of Oil, Gas and Mining

OPERATOR CHANGE WORKSHEET

ROUTING
1. GLH
2. CDW
3. FILE

Change of Operator (Well Sold) — Designation of Agent/Operator

Operator Name Change — **X Merger**

The operator of the well(s) listed below has changed, effective: **12-31-02**

FROM: (Old Operator):	**TO:** (New Operator):
PHILLIPS PETROLEUM COMPANY	CONOCOPHILLIPS COMPANY
Address: 980 PLAZA OFFICE	Address: P O BOX 2197, WL3 4066
BARTLESVILLE, OK 74004	HOUSTON, TX 77252
Phone: 1-(918)-661-4415	Phone: 1-(832)-486-2329
Account No. N1475	Account No. N2335

CA No. **Unit:** **DRUNKARDS WASH**

WELL(S)

NAME	SEC TWN RNG	API NO	ENTITY NO	LEASE TYPE	WELL TYPE	WELL STATUS
USA 14-416	14-15S-08E	43-007-30646	11256	FEDERAL	GW	P
USA 14-417	14-15S-08E	43-007-30647	11256	FEDERAL	GW	P
USA 15-420	15-15S-08E	43-007-30690	11256	FEDERAL	GW	P
USA 15-422	15-15S-08E	43-007-30691	11256	FEDERAL	GW	P
UTAH 1-42	01-15S-09E	43-007-30220	11256	STATE	GW	P
UTAH 1-43	01-15S-09E	43-007-30221	11256	STATE	GW	P
UTAH 1-44	01-15S-09E	43-007-30222	11256	STATE	GW	P
UTAH 1-45	01-15S-09E	43-007-30223	11256	STATE	GW	P
UTAH 2-46	02-15S-09E	43-007-30224	11256	STATE	GW	P
UTAH 2-47	02-15S-09E	43-007-30225	11256	STATE	GW	P
UTAH 2-48	02-15S-09E	43-007-30226	11256	STATE	GW	P
UTAH 2-49	02-15S-09E	43-007-30227	11256	STATE	GW	P
UTAH 03-214	03-15S-09E	43-007-30295	11256	STATE	GW	P
UTAH 03-215	03-15S-09E	43-007-30297	11256	STATE	GW	P
UTAH 03-213	03-15S-09E	43-007-30381	11256	STATE	GW	P
UTAH 03-212	03-15S-09E	43-007-30468	11256	STATE	GW	P
UTAH 04-216	04-15S-09E	43-007-30382	11256	STATE	GW	P
UTAH 04-217	04-15S-09E	43-007-30383	11256	STATE	GW	P
UTAH 04-226	04-15S-09E	43-007-30408	11256	STATE	GW	P
UTAH 04-218	04-15S-09E	43-007-30418	11256	STATE	GW	P

OPERATOR CHANGES DOCUMENTATION

Enter date after each listed item is completed

1. (R649-8-10) Sundry or legal documentation was received from the **FORMER** operator on: 01/08/2003
2. (R649-8-10) Sundry or legal documentation was received from the **NEW** operator on: 01/08/2003
3. The new company has been checked through the **Department of Commerce, Division of Corporations Database on:** 02/03/2003
4. Is the new operator registered in the State of Utah: YES Business Number: 562960-0143
5. If **NO**, the operator was contacted contacted on: _____

6. (R649-9-2)Waste Management Plan has been received on: IN PLACE

7. **Federal and Indian Lease Wells:** The BLM and or the BIA has approved the merger, name change, or operator change for all wells listed on Federal or Indian leases on: 01/14/2003

8. **Federal and Indian Units:**
The BLM or BIA has approved the successor of unit operator for wells listed on: 01/14/2003

9. **Federal and Indian Communization Agreements ("CA"):**
The BLM or BIA has approved the operator for all wells listed within a CA on: 01/14/2003

10. **Underground Injection Control ("UIC")** The Division has approved UIC Form 5, **Transfer of Authority to Inject,** for the enhanced/secondary recovery unit/project for the water disposal well(s) listed on: N/A

DATA ENTRY:

1. Changes entered in the **Oil and Gas Database on:** 02/10/2003
2. Changes have been entered on the **Monthly Operator Change Spread Sheet on:** 02/10/2003
3. Bond information entered in RBDMS on: N/A
4. Fee wells attached to bond in RBDMS on: N/A

STATE WELL(S) BOND VERIFICATION:

1. State well(s) covered by Bond Number: 8140-60-24

FEDERAL WELL(S) BOND VERIFICATION:

1. Federal well(s) covered by Bond Number: 8015-16-69

INDIAN WELL(S) BOND VERIFICATION:

1. Indian well(s) covered by Bond Number: N/A

FEE WELL(S) BOND VERIFICATION:

1. (R649-3-1) The **NEW** operator of any fee well(s) listed covered by Bond Number 6196922

2. The **FORMER** operator has requested a release of liability from their bond on: N/A
The Division sent response by letter on: N/A

LEASE INTEREST OWNER NOTIFICATION:

3. (R649-2-10) The **FORMER** operator of the fee wells has been contacted and informed by a letter from the Division of their responsibility to notify all interest owners of this change on: N/A

COMMENTS:

United States Department of the Interior

BUREAU OF LAND MANAGEMENT
Eastern States Office
7450 Boston Boulevard
Springfield, Virginia 22153

IN REPLY REFER TO
3106.8(932.34)WF

January 16, 2003

NOTICE

ConocoPhillips Company P.O. Box 7500 Bartlesville, Oklahoma 74005	: : :	Oil & Gas Leases

Merger/Name Change Recognized

Acceptable evidence was received in this office on January 14, 2003, concerning the change of name of Phillips Petroleum Company to **ConocoPhillips Company** and the merger of **Conoco Incorporated** into **ConocoPhillips Company** on Federal oil and gas leases, with **ConocoPhillips Company being the surviving entity.**

The Secretary of the State of Delaware certified the effective date of this merger effective December 31, 2002.

The oil and gas lease files identified on the enclosed exhibit have been noted to the merger. The exhibit was compiled from a list of leases obtained from your list of leases. Eastern States has not abstracted the lease files to determine if the entities affected by this merger hold an interest in the leases identified nor have we attempted to identify leases where the entities are the operator on the ground maintaining no vested record title or operating rights interest. We are notifying the Minerals Management Service and all applicable Bureau of Land Management offices of this merger and name change by a copy of this notice. If additional documentation for changes of operator are required by our Field Offices, you will be contacted by them.

If you identify other leases in which the merging entity maintain an interest, please contact this office and we will appropriately document those files with a copy of this Notice.

By Operation of law the name of the principal on Nationwide Oil and Gas Bond held by Conoco Incorporated (ES0085) has been changed to ConocoPhillips Company.

If you have any questions, please contact Bill Forbes at 703-440-1536.

Wilbert B. Forbes
Land Law Examiner
Branch of Use Authorization
Division of Resources Planning, Use
and Protection

bc: JFO, BLM State Offices, MMS, ES RF, 930 RF, ES-932:
Bforbes:wbf:01/16/03:440-1536/ConocoPhillips Co

STATE OF UTAH
DEPARTMENT OF NATURAL RESOURCES
DIVISION OF OIL, GAS AND MINING

FORM 9

SUNDRY NOTICES AND REPORTS ON WELLS

Do not use this form for proposals to drill new wells, significantly deepen existing wells below current bottom-hole depth, reenter plugged wells, or to drill horizontal laterals. Use APPLICATION FOR PERMIT TO DRILL form for such proposals.

5. LEASE DESIGNATION AND SERIAL NUMBER:

6. IF INDIAN, ALLOTTEE OR TRIBE NAME:

7. UNIT or CA AGREEMENT NAME:

1. TYPE OF WELL: OIL WELL ☐ GAS WELL ☐ OTHER All

8. WELL NAME and NUMBER: See Attached List

2. NAME OF OPERATOR: Phillips Petroleum Company

9. API NUMBER: See List

3. ADDRESS OF OPERATOR: 980 Plaza Office CITY Bartlesville STATE OK ZIP 74004

PHONE NUMBER: (918) 661-4415

10. FIELD AND POOL, OR WILDCAT:

4. LOCATION OF WELL

FOOTAGES AT SURFACE: See Attached List

COUNTY:

QTR/QTR, SECTION, TOWNSHIP, RANGE, MERIDIAN:

STATE: UTAH

11. CHECK APPROPRIATE BOXES TO INDICATE NATURE OF NOTICE, REPORT, OR OTHER DATA

TYPE OF SUBMISSION	TYPE OF ACTION		
☐ NOTICE OF INTENT (Submit in Duplicate)	☐ ACIDIZE	☐ DEEPEN	☐ REPERFORATE CURRENT FORMATION
Approximate date work will start:	☐ ALTER CASING	☐ FRACTURE TREAT	☐ SIDETRACK TO REPAIR WELL
	☐ CASING REPAIR	☐ NEW CONSTRUCTION	☐ TEMPORARILY ABANDON
	☐ CHANGE TO PREVIOUS PLANS	☑ OPERATOR CHANGE	☐ TUBING REPAIR
	☐ CHANGE TUBING	☐ PLUG AND ABANDON	☐ VENT OR FLARE
☑ SUBSEQUENT REPORT (Submit Original Form Only)	☐ CHANGE WELL NAME	☐ PLUG BACK	☐ WATER DISPOSAL
Date of work completion:	☐ CHANGE WELL STATUS	☐ PRODUCTION (START/RESUME)	☐ WATER SHUT-OFF
	☐ COMMINGLE PRODUCING FORMATIONS	☐ RECLAMATION OF WELL SITE	☐ OTHER:
	☐ CONVERT WELL TYPE	☐ RECOMPLETE - DIFFERENT FORMATION	

12. DESCRIBE PROPOSED OR COMPLETED OPERATIONS. Clearly show all pertinent details including dates, depths, volumes, etc.

Conoco Inc. was merged into Phillips Petroleum Company, the surviving corporation, on December 31, 2002. In connection with this merger and effective on the same date, the name of the surviving corporation was changed to "ConocoPhillips Company". We are requesting that a new Operator Number be assigned to ConocoPhillips Company.

Please send production reporting forms to Herb Henderson at ConocoPhillips Company, 315 S. Johnstone, 980 Plaza Office, Bartlesville, OK 74004. Herb's phone number is 918-661-4415.

Current Operator
Phillips Petroleum Company
Steve de Albuquerque

New Operator
ConocoPhillips Company
Yolanda Perez

RECEIVED
JAN 0 8 2003
DIV. OF OIL, GAS & MINING

NAME (PLEASE PRINT) Yolanda Perez TITLE Sr. Regulatory Analyst

SIGNATURE Yolanda Perez DATE 12/30/2002

(This space for State use only)

(5/2000) (See Instructions on Reverse Side)

ConocoPhillips

Divisions of Oil, Gas, and Mining
Attn: Mr. John Baza
1594 West North Temple,
Suite 1210, P. O. Box 145801
Salt Lake City, UT 84114-5801

Re: Notice of Address Change, Merger and Name Change
Address Change effective **December 2, 2002**
Merger and Name Change effective **December 31, 2002**

Gentlemen:

1. Effective December 2, 2002, Phillips Petroleum Company will close its Englewood, Colorado Rocky Mountain Region office. After that time, all correspondence, notices and invoice for Land related matters should be directed to the address(es) noted below. Note that until December 31, 2002, all properties in which Phillips held an interest will continue to be operated by Phillips Petroleum Company, a wholly-owned subsidiary of ConocoPhillips.

2. On December 31, 2002, Phillips Petroleum Company and Conoco Inc. will merge, and the surviving corporation will be renamed "ConocoPhillips Company".

In accordance with the notice provisions of the Operating Agreements and other agreements, if any, between our companies, please adjust your company/organization records, effective for address purposes as of December 2, 2002, and for company name purposes, as of January 1, 2003, to reflect the following information for addressing and delivery of notices, invoicing and payment, and communications with ConocoPhillips Company. This will also apply to Lease Sale notices and other lease-related correspondence and notifications.

U.S. Mail Address:

ConocoPhillips Company
P.O. Box 2197
Houston, Texas 77252
Attn: Chief Landman,
San Juan/Rockies

Physical Address & Overnight Delivery:

ConocoPhillips Company
550 Westlake Park Blvd.
Three Westlake Park
3WL, Room WL 9000
Houston, Texas 77079
Attn: Chief Landman,
San Juan/Rockies

All ballots and official notices/responses sent by facsimile transmission should be sent to the following contact:

Attn: Chief Landman,
San Juan/Rockies

Fax No.: 832-486-2688 or
832-486-2687

Please contact the undersigned immediately if you have any questions. This notice does not apply to royalty inquiries, joint interest billings, or revenue remittances. Please continue to use the same addresses you are currently using for these matters

Sincerely, William Rainbolt

RECEIVED
DEC 0 2 2002
DIVISION OF
OIL, GAS AND MINING

ConocoPhillips

SECRETARY'S CERTIFICATE

I, the undersigned, Jennifer M. Garcia, Assistant Secretary of ConocoPhillips Company, formerly Phillips Petroleum Company, organized and existing under and by virtue of the laws of the State of Delaware (the "Corporation"), hereby certify that:

1. As Assistant Secretary I am authorized to execute this certificate on behalf of the Corporation.

2. The attached photocopy of the Certificate of Amendment to the Restated Certificate of Incorporation of Phillips Petroleum Company (to be renamed ConocoPhillips Company) is a true and correct copy as filed in the office of the Secretary of State of Delaware on the 12th day of December 2002, with an effective date of January 1, 2003 and such Certificate of Amendment has not been modified, amended, rescinded or revoked and is in full force and effect as of the date hereof.

3. The attached photocopy of the Certificate of Merger of Conoco Inc. with and into ConocoPhillips Company is a true and correct copy as filed in the office of the Secretary of State of Delaware on the 12th day of December 2002, with an effective date of December 31, 2002 and such Certificate of Merger has not been modified, amended, rescinded or revoked and is in full force and effect as of the date hereof.

IN WITNESS WHEREOF, I have hereunto set my hand as Assistant Secretary and affixed the corporate seal of the Corporation this 7th day of January 2003.

Assistant Secretary
ConocoPhillips Company

STATE OF TEXAS §
§
COUNTY OF HARRIS §

This instrument was acknowledged before me on January 7, 2003, by Jennifer M. Garcia, Assistant Secretary of ConocoPhillips Company, a Delaware corporation, on behalf of said Corporation.

SUSAN F. SHORT
NOTARY PUBLIC
STATE OF TEXAS
EXPIRES
11-12-2005

Notary Public

RECEIVED
JAN 0 8 2003
DIV. OF OIL, GAS & MINING

Delaware

The First State

I, HARRIET SMITH WINDSOR, SECRETARY OF STATE OF THE STATE OF DELAWARE, DO HEREBY CERTIFY THE ATTACHED IS A TRUE AND CORRECT COPY OF THE CERTIFICATE OF AMENDMENT OF "PHILLIPS PETROLEUM COMPANY", CHANGING ITS NAME FROM "PHILLIPS PETROLEUM COMPANY" TO "CONOCOPHILLIPS COMPANY", FILED IN THIS OFFICE ON THE TWELFTH DAY OF DECEMBER, A.D. 2002, AT 1:41 O'CLOCK P.M.

AND I DO HEREBY FURTHER CERTIFY THAT THE EFFECTIVE DATE OF THE AFORESAID CERTIFICATE OF AMENDMENT IS THE THIRTY-FIRST DAY OF DECEMBER, A.D. 2002, AT 11 O'CLOCK P.M.

RECEIVED
JAN 0 8 2003
DIV. OF OIL, GAS & MINING

Harriet Smith Windsor

Harriet Smith Windsor, Secretary of State

0064324 8100

AUTHENTICATION: 2183360

030002793

DATE: 01-02-03

STATE OF DELAWARE
SECRETARY OF STATE
DIVISION OF CORPORATIONS
FILED 01:41 PM 12/12/2002
020763238 - 0064324

CERTIFICATE OF AMENDMENT

to the

RESTATED CERTIFICATE OF INCORPORATION

of

PHILLIPS PETROLEUM COMPANY
(to be renamed ConocoPhillips Company)

Phillips Petroleum Company ("Phillips"), a corporation organized and existing under the General Corporation Law of the State of Delaware (the "DGCL"), hereby certifies that:

1. The amendments to Phillips' Restated Certificate of Incorporation set forth below were duly adopted in accordance with the provisions of Section 242 of the DGCL and have been consented to in writing by the sole stockholder of Phillips in accordance with Section 228 of the DGCL.

2. Phillips' Restated Certificate of Incorporation is hereby amended by deleting Article I thereof and replacing in lieu thereof a new Article I reading in its entirety as follows:

"The name of the corporation (which is hereinafter referred to as the "Corporation") is ConocoPhillips Company."

3. Phillips' Restated Certificate of Incorporation is hereby amended by deleting Section 1 of Article IV thereof and replacing in lieu thereof a new Section 1 reading in its entirety as follows:

"Section 1. The Corporation shall be authorized to issue 2,100 shares of capital stock, of which 2,100 shares shall be shares of Common Stock, $.01 par value ("Common Stock")."

4. Pursuant to Section 103(d) of the DGCL, this amendment will become effective at 11:00 p.m., Eastern time, on December 31, 2002.

RECEIVED
JAN 0 8 2003
DIV. OF OIL, GAS & MINING

IN WITNESS WHEREOF, Phillips has caused this certificate to be executed this 12th day of December, 2002.

PHILLIPS PETROLEUM COMPANY

By: _____
Name: Rick A. Harrington
Title: Senior Vice President, Legal, and General Counsel

HOU03:884504.1

RECEIVED
JAN 0 8 2003
DIV. OF OIL, GAS & MINING

Delaware

The First State

I, HARRIET SMITH WINDSOR, SECRETARY OF STATE OF THE STATE OF DELAWARE, DO HEREBY CERTIFY THE ATTACHED IS A TRUE AND CORRECT COPY OF THE CERTIFICATE OF MERGER, WHICH MERGES:

"CONOCO INC.", A DELAWARE CORPORATION,

WITH AND INTO "CONOCOPHILLIPS COMPANY" UNDER THE NAME OF "CONOCOPHILLIPS COMPANY", A CORPORATION ORGANIZED AND EXISTING UNDER THE LAWS OF THE STATE OF DELAWARE, AS RECEIVED AND FILED IN THIS OFFICE THE TWELFTH DAY OF DECEMBER, A.D. 2002, AT 1:44 O'CLOCK P.M.

AND I DO HEREBY FURTHER CERTIFY THAT THE EFFECTIVE DATE OF THE AFORESAID CERTIFICATE OF MERGER IS THE THIRTY-FIRST DAY OF DECEMBER, A.D. 2002, AT 11:59 O'CLOCK P.M.

RECEIVED
JAN 0 8 2003
DIV. OF OIL, GAS & MINING

Harriet Smith Windsor

Harriet Smith Windsor, Secretary of State

0064324 8100M

AUTHENTICATION: 2183370

030002793

DATE: 01-02-03

STATE OF DELAWARE
SECRETARY OF STATE
DIVISION OF CORPORATIONS
FILED 01:44 PM 12/12/2002
020763253 - 0064324

CERTIFICATE OF MERGER

of

Conoco Inc.
(a Delaware corporation)

with and into

ConocoPhillips Company
(a Delaware corporation)

Phillips Petroleum Company, a Delaware corporation to be renamed ConocoPhillips Company prior to the effective time of this certificate of merger (the "Surviving Corporation"), in compliance with the requirements of the General Corporation Law of the State of Delaware (the "DGCL") and desiring to effect a merger of Conoco Inc., a Delaware corporation formerly incorporated under the name Du Pont Holdings, Inc. (the "Merging Corporation," and together with the Surviving Corporation, the "Constituent Corporations"), with and into the Surviving Corporation, and acting by its duly authorized officer, DOES HEREBY CERTIFY that:

First: As of the date hereof, the name and state of incorporation of each of the Constituent Corporations of the merger are as follows:

NAME	STATE OF INCORPORATION
PHILLIPS PETROLEUM COMPANY	Delaware
CONOCO INC.	Delaware

Second: An agreement and plan of merger has been approved, adopted, certified, executed and acknowledged by each of the Constituent Corporations in accordance with the requirements of Section 251 of the DGCL;

Third: The name of the Surviving Corporation will be ConocoPhillips Company;

Fourth: The Certificate of Incorporation of ConocoPhillips Company immediately prior to the merger shall be the Certificate of Incorporation of the Surviving Corporation until such time as it may be amended in accordance with applicable law and the provisions thereof;

Fifth: The executed agreement and plan of merger is on file at an office of the Surviving Corporation, the address of which is 600 North Dairy Ashford, Houston, Texas 77079;

RECEIVED
JAN 0 8 2003
DIV. OF OIL, GAS & MINING

Sixth: A copy of the agreement and plan of merger will be furnished by the Surviving Corporation, on request and without cost, to any stockholder of any Constituent Corporation; and

Seventh: Pursuant to Section 103(d) of the DGCL, this certificate of merger will become effective at 11:59 p.m., Eastern time, on December 31, 2002.

Dated: December 12, 2002

PHILLIPS PETROLEUM COMPANY
(a Delaware corporation)

By:_____
Name: Rick A. Harrington
Title: Senior Vice President, Legal, and General Counsel

RECEIVED
JAN 0 8 2003
DIV. OF OIL, GAS & MINING

STATE OF UTAH
DEPARTMENT OF COMMERCE
REGISTRATION

CONOCOPHILLIPS COMPANY

EFFECTIVE
06/14/1946

EXPIRATION
*RENEWAL

REFERENCE NUMBER(S). CLASSIFICATION(S) & DETAIL(S)

Corporation - Foreign - Profit
562960-0143

UNITED STATES CORP CO
CONOCOPHILLIPS COMPANY
GATEWAY TOWER EAST STE 900
10 EAST SOUTH TEMPLE
SLC UT 84133

RECEIVED
JAN 0 8 2003
DIV. OF OIL, GAS & MINING

STATE OF UTAH
DEPARTMENT OF COMMERCE
DIVISION OF CORPORATIONS & COMMERCIAL CODE

REGISTRATION

EFFECTIVE DATE: 06/14/1946

EXPIRATION DATE: *RENEWAL

ISSUED TO: CONOCOPHILLIPS COMPANY

REFERENCE NUMBER(S), CLASSIFICATION(S) & DETAIL(S)
562960-0143 **Corporation - Foreign - Profit**
***RENEWAL**
You will need to renew your registration each anniversary date of the effective date.
Exceptions: DBAs and Business Trusts renew every three (3) years from the effective date.

Utah Well List as of 12/26/02

API Well Number	Well Name	Well Type	Well Status	Sec	Twpn	Twpd	Rngn	Rngd
43-007-30887-00-00	ANDREEN 32-529	Gas Well	APD	32	14	S	10	E
43-007-30865-00-00	COTNER 29-549	Gas Well	APD	29	14	S	10	E
43-007-30837-00-00	DALLIN 32-615	Gas Well	APD	32	13	S	9	E
43-047-34551-00-00	FED 43-24-3 #1	Gas Well	APD	24	10	S	17	E
43-047-33982-00-00	FEDERAL 12-17 #1	Gas Well	APD	17	10	S	18	E
43-047-34471-00-00	FEDERAL 12-29-7 1	Gas Well	APD	29	9	S	19	E
43-047-34472-00-00	FEDERAL 31-31-6 1	Gas Well	APD	31	9	S	19	E
43-007-30864-00-00	MCKENDRICK 29-548	Gas Well	APD	29	14	S	10	E
43-015-30512-00-00	PPCO 19-379	Gas Well	APD	19	16	S	9	E
43-015-30515-00-00	PPCO 24-562	Gas Well	APD	24	16	S	8	E
43-015-30548-00-00	PPCO 30-605	Gas Well	APD	30	16	S	9	E
43-007-30888-00-00	PRICE 32-438	Gas Well	APD	32	14	S	10	E
43-007-30813-00-00	RITZAKIS 33-514	Gas Well	APD	33	13	S	9	E
43-007-30766-00-00	RITZAKIS 33-516	Gas Well	APD	33	13	S	9	E
43-007-30838-00-00	ROWLEY 32-616	Gas Well	APD	32	13	S	9	E
43-007-30863-00-00	SCHMIDT 29-531	Gas Well	APD	29	14	S	10	E
43-007-30797-00-00	SEELY 15-498	Gas Well	APD	15	14	S	8	E
43-007-30798-00-00	SEELY 15-499	Gas Well	APD	15	14	S	8	E
43-007-30799-00-00	SEELY 15-500	Gas Well	APD	15	14	S	8	E
43-007-30796-00-00	SEELY 22-492	Gas Well	APD	22	14	S	8	E
43-007-30801-00-00	SEELY 22-502	Gas Well	APD	22	14	S	8	E
43-007-30802-00-00	SEELY 22-503	Gas Well	APD	22	14	S	8	E
43-007-30711-00-00	USA 09-452	Gas Well	APD	9	15	S	8	E
43-015-30351-00-00	USA 11-313	Gas Well	APD	11	16	S	9	E
43-015-30398-00-00	USA 12-385	Gas Well	APD	12	16	S	9	E
43-015-30409-00-00	USA 12-426	Gas Well	APD	12	16	S	9	E
43-007-30805-00-00	USA 14-490	Gas Well	APD	14	14	S	8	E
43-007-30806-00-00	USA 14-491	Gas Well	APD	14	14	S	8	E
43-007-30676-00-00	USA 15-421	Gas Well	APD	15	15	S	8	E
43-015-30417-00-00	USA 21-427	Gas Well	APD	21	16	S	9	E
43-015-30416-00-00	USA 21-428	Gas Well	APD	21	16	S	9	E
43-015-30415-00-00	USA 21-429	Gas Well	APD	21	16	S	9	E
43-007-30515-00-00	USA 31-309	Gas Well	APD	31	15	S	10	E
43-007-30835-00-00	USA 33-515	Gas Well	APD	33	13	S	9	E
43-007-30836-00-00	USA 33-624	Gas Well	APD	33	13	S	9	E
43-007-30803-00-00	USA 34-518	Gas Well	APD	34	14	S	8	E
43-007-30478-00-00	UTAH 05-224	Gas Well	APD	5	15	S	9	E
43-015-30411-00-00	UTAH 16-365	Gas Well	APD	16	16	S	9	E
43-015-30412-00-00	UTAH 16-366	Gas Well	APD	16	16	S	9	E
43-015-30413-00-00	UTAH 16-430	Gas Well	APD	16	16	S	9	E
43-015-30299-00-00	UTAH 18-374	Gas Well	APD	18	16	S	9	E
43-015-30420-00-00	UTAH 19-377	Gas Well	APD	19	16	S	9	E
43-015-30492-00-00	UTAH 19-378	Gas Well	APD	19	16	S	9	E
43-007-30891-00-00	UTAH 19-533	Gas Well	APD	19	14	S	10	E
43-015-30414-00-00	UTAH 20-381	Gas Well	APD	20	16	S	9	E
43-015-30421-00-00	UTAH 20-382	Gas Well	APD	20	16	S	9	E
43-015-30518-00-00	UTAH 25-576	Gas Well	APD	25	16	S	8	E
43-015-30539-00-00	UTAH 25-578	Gas Well	APD	25	16	S	8	E
43-015-30540-00-00	UTAH 25-579	Gas Well	APD	25	16	S	8	E
43-007-30817-00-00	UTAH 25-618	Gas Well	APD	25	13	S	9	E
43-015-30543-00-00	UTAH 26-582	Gas Well	APD	26	16	S	8	E
43-015-30547-00-00	UTAH 29-608	Gas Well	APD	29	16	S	9	E
43-007-30889-00-00	UTAH 32-128	Gas Well	APD	32	14	S	10	E
43-007-30814-00-00	UTAH 35-506	Gas Well	APD	35	13	S	9	E

Utah Well List as of 12/26/02

API Well Number	Well Name	Well Type	Well Status	Sec	Twpn	Twpd	Rngn	Rngd
43-047-33750-00-00	FEDERAL 34-29	Gas Well	P	29	9	S	19	E
43-007-30782-00-00	GAROFOLA 26-482	Gas Well	P	26	15	S	8	E
43-007-30335-00-00	GIACOLETTO 11-113	Gas Well	P	11	14	S	9	E
43-007-30407-00-00	GIACOLETTO 13-120	Gas Well	P	13	14	S	9	E
43-007-30345-00-00	GIACOLETTO 14-121	Gas Well	P	14	14	S	9	E
43-007-30487-00-00	HELPER & ASSOC 07-307	Gas Well	P	7	15	S	9	E
43-007-30459-00-00	HELPER & ASSOC 18-236	Gas Well	P	18	15	S	9	E
43-007-30720-00-00	HELPER & ASSOC 18-308	Gas Well	P	18	15	S	9	E
43-007-30412-00-00	HELPER & ASSOC 8-232	Gas Well	P	8	15	S	9	E
43-007-30258-00-00	HELPER & ASSOCIATES 7-84	Gas Well	P	7	15	S	9	E
43-007-30588-00-00	JENSEN 16-132	Gas Well	P	16	15	S	10	E
43-007-30420-00-00	KAKATSIDES 31-197	Gas Well	P	31	14	S	9	E
43-007-30296-00-00	LDS 17-133	Gas Well	P	17	15	S	10	E
43-007-30323-00-00	PAAR 16-146	Gas Well	P	16	14	S	9	E
43-047-34286-00-00	PETES WASH 23-12 #1	Gas Well	P	12	10	S	17	E
43-007-30748-00-00	PIERUCCI 25-461	Gas Well	P	25	15	S	8	E
43-007-30749-00-00	PIERUCCI 25-462	Gas Well	P	25	15	S	8	E
43-007-30754-00-00	PIERUCCI 26-463	Gas Well	P	26	15	S	8	E
43-007-30755-00-00	PIERUCCI 26-464	Gas Well	P	26	15	S	8	E
43-007-30745-00-00	PIERUCCI 26-481	Gas Well	P	26	15	S	8	E
43-007-30117-00-00	PINNACLE PEAK 19-171	Gas Well	P	19	14	S	9	E
43-007-30845-00-00	PMC 10-526	Gas Well	P	10	15	S	8	E
43-007-30282-00-00	POWELL 19-104	Gas Well	P	19	15	S	10	E
43-007-30283-00-00	POWELL 19-105	Gas Well	P	19	15	S	10	E
43-007-30346-00-00	POWELL 30-173	Gas Well	P	30	15	S	10	E
43-015-30279-00-00	PPCO 10-557	Gas Well	P	10	16	S	8	E
43-015-30494-00-00	PPCO 15-555	Gas Well	P	15	16	S	8	E
43-007-30211-00-00	PRETTYMAN 10-15-34	Gas Well	P	10	14	S	9	E
43-007-30340-00-00	PRETTYMAN 11-114	Gas Well	P	11	14	S	9	E
43-007-30653-00-00	RGC 21-331	Gas Well	P	21	15	S	9	E
43-007-30743-00-00	RGC 21-332	Gas Well	P	21	15	S	9	E
43-007-30747-00-00	RGC 25-460	Gas Well	P	25	15	S	8	E
43-007-30559-00-00	RGC 28-318	Gas Well	P	28	15	S	9	E
43-007-30518-00-00	RGC 28-319	Gas Well	P	28	15	S	9	E
43-007-30509-00-00	RITZAKIS 03-408	Gas Well	P	3	14	S	9	E
43-007-30473-00-00	RITZAKIS 5-304	Gas Well	P	5	14	S	9	E
43-007-30474-00-00	RITZAKIS 5-305	Gas Well	P	5	14	S	9	E
43-007-30475-00-00	RITZAKIS 8-298	Gas Well	P	8	14	S	9	E
43-007-30479-00-00	RITZAKIS 8-299	Gas Well	P	8	14	S	9	E
43-007-30476-00-00	RITZAKIS 8-300	Gas Well	P	8	14	S	9	E
43-007-30374-00-00	ROBERTSON 32-127	Gas Well	P	32	14	S	10	E
43-007-30610-00-00	SAMPINOS 16-131	Gas Well	P	16	15	S	10	E
43-007-30723-00-00	SAMPINOS 16-454	Gas Well	P	16	15	S	10	E
43-007-30765-00-00	SAMPINOS 16-521	Gas Well	P	16	15	S	10	E
43-007-30800-00-00	SEELY 22-501	Gas Well	P	22	14	S	8	E
43-007-30130-00-00	ST OF UT 25-9-1	Gas Well	P	25	14	S	9	E
43-007-30142-00-00	ST OF UT 36-3-4	Gas Well	P	36	14	S	9	E
43-007-30116-00-00	STELLA-HAMAKER 10-174	Gas Well	P	10	15	S	8	E
43-007-30746-00-00	TABOR 23-468	Gas Well	P	23	15	S	8	E
43-007-30319-00-00	TELONIS 15-142	Gas Well	P	15	14	S	9	E
43-007-30322-00-00	TELONIS 16-145	Gas Well	P	16	14	S	9	E
43-007-30300-00-00	TELONIS 19-150	Gas Well	P	19	14	S	9	E
43-007-30299-00-00	TELONIS 19-151	Gas Well	P	19	14	S	9	E
43-007-30327-00-00	TELONIS 20-152	Gas Well	P	20	14	S	9	E

Utah Well List as of 12/26/02

API Well Number	Well Name	Well Type	Well Status	Sec	Twpn	Twpd	Rngn	Rngd
43-007-30631-00-00	USA 13-419	Gas Well	P	13	15	S	8	E
43-007-30707-00-00	USA 13-447	Gas Well	P	13	14	S	8	E
43-007-30706-00-00	USA 13-470	Gas Well	P	13	14	S	8	E
43-007-30789-00-00	USA 13-474	Gas Well	P	13	14	S	8	E
43-007-30790-00-00	USA 13-475	Gas Well	P	13	14	S	8	E
43-007-30568-00-00	USA 13-91	Gas Well	P	13	14	S	9	E
43-007-30404-00-00	USA 14-122	Gas Well	P	14	14	S	9	E
43-015-30418-00-00	USA 1-425	Gas Well	P	1	16	S	9	E
43-007-30579-00-00	USA 14-325	Gas Well	P	14	15	S	8	E
43-007-30634-00-00	USA 14-386	Gas Well	P	14	15	S	8	E
43-007-30646-00-00	USA 14-416	Gas Well	P	14	15	S	8	E
43-007-30647-00-00	USA 14-417	Gas Well	P	14	15	S	8	E
43-007-30791-00-00	USA 14-476	Gas Well	P	14	14	S	8	E
43-007-30792-00-00	USA 14-477	Gas Well	P	14	14	S	8	E
43-007-30529-00-00	USA 14-74	Gas Well	P	14	14	S	9	E
43-007-30263-00-00	USA 14-75	Gas Well	P	14	14	S	9	E
43-007-30450-00-00	USA 15-176	Gas Well	P	15	14	S	9	E
43-007-30423-00-00	USA 15-177	Gas Well	P	15	14	S	9	E
43-007-30690-00-00	USA 15-420	Gas Well	P	15	15	S	8	E
43-007-30691-00-00	USA 15-422	Gas Well	P	15	15	S	8	E
43-007-30264-00-00	USA 15-88	Gas Well	P	15	14	S	9	E
43-007-30422-00-00	USA 17-179	Gas Well	P	17	14	S	9	E
43-007-30622-00-00	USA 17-180A	Gas Well	P	17	14	S	9	E
43-007-30618-00-00	USA 18-181	Gas Well	P	18	14	S	9	E
43-007-30417-00-00	USA 18-182	Gas Well	P	18	14	S	9	E
43-007-30619-00-00	USA 18-435	Gas Well	P	18	14	S	9	E
43-007-30393-00-00	USA 19-222	Gas Well	P	19	15	S	10	E
43-007-30392-00-00	USA 19-73	Gas Well	P	19	15	S	10	E
43-007-30448-00-00	USA 20-287	Gas Well	P	20	15	S	10	E
43-007-30451-00-00	USA 20-288	Gas Well	P	20	15	S	10	E
43-007-30590-00-00	USA 20-398	Gas Well	P	20	15	S	10	E
43-007-30591-00-00	USA 20-399	Gas Well	P	20	15	S	10	E
43-007-30424-00-00	USA 21-184	Gas Well	P	21	14	S	9	E
43-007-30425-00-00	USA 21-35	Gas Well	P	21	14	S	9	E
43-007-30426-00-00	USA 22-185	Gas Well	P	22	14	S	9	E
43-007-30477-00-00	USA 22-186	Gas Well	P	22	14	S	9	E
43-007-30700-00-00	USA 22-466	Gas Well	P	22	15	S	8	E
43-007-30611-00-00	USA 23-423	Gas Well	P	23	14	S	8	E
43-007-30650-00-00	USA 23-445	Gas Well	P	23	15	S	8	E
43-007-30704-00-00	USA 23-451	Gas Well	P	23	15	S	8	E
43-007-30503-00-00	USA 23-467	Gas Well	P	23	15	S	8	E
43-007-30793-00-00	USA 23-478	Gas Well	P	23	14	S	8	E
43-007-30794-00-00	USA 23-479	Gas Well	P	23	14	S	8	E
43-007-30795-00-00	USA 23-480	Gas Well	P	23	14	S	8	E
43-007-30469-00-00	USA 24-183	Gas Well	P	24	14	S	8	E
43-007-30612-00-00	USA 24-387	Gas Well	P	24	14	S	8	E
43-007-30613-00-00	USA 24-388	Gas Well	P	24	14	S	8	E
43-007-30651-00-00	USA 24-443	Gas Well	P	24	15	S	8	E
43-007-30648-00-00	USA 24-444	Gas Well	P	24	15	S	8	E
43-007-30708-00-00	USA 24-446	Gas Well	P	24	14	S	8	E
43-007-30652-00-00	USA 24-448	Gas Well	P	24	15	S	8	E
43-007-30705-00-00	USA 24-449	Gas Well	P	24	15	S	8	E
43-007-30505-00-00	USA 25-459	Gas Well	P	25	15	S	8	E
43-007-30614-00-00	USA 26-393	Gas Well	P	26	14	S	8	E

Utah Well List as of 12/26/02

API Well Number	Well Name	Well Type	Well Status	Sec	Twpn	Twpd	Rngn	Rngd
43-007-30430-00-00	UTAH 06-223	Gas Well	P	6	15	S	9	E
43-007-30562-00-00	UTAH 06-330	Gas Well	P	6	15	S	9	E
43-007-30716-00-00	UTAH 06-483	Gas Well	P	6	15	S	9	E
43-007-30409-00-00	UTAH 07-234	Gas Well	P	7	15	S	9	E
43-007-30421-00-00	UTAH 07-235	Gas Well	P	7	15	S	9	E
43-007-30411-00-00	UTAH 08-231	Gas Well	P	8	15	S	9	E
43-007-30488-00-00	UTAH 08-233	Gas Well	P	8	15	S	9	E
43-015-30464-00-00	UTAH 08-354	Gas Well	P	8	16	S	9	E
43-015-30378-00-00	UTAH 08-355	Gas Well	P	8	16	S	9	E
43-015-30379-00-00	UTAH 08-356	Gas Well	P	8	16	S	9	E
43-015-30380-00-00	UTAH 08-357	Gas Well	P	8	16	S	9	E
43-007-30449-00-00	UTAH 09-227	Gas Well	P	9	15	S	9	E
43-007-30561-00-00	UTAH 09-329	Gas Well	P	9	15	S	9	E
43-015-30300-00-00	UTAH 09-358	Gas Well	P	9	16	S	9	E
43-015-30407-00-00	UTAH 09-359	Gas Well	P	9	16	S	9	E
43-015-30397-00-00	UTAH 09-360	Gas Well	P	9	16	S	9	E
43-015-30408-00-00	UTAH 09-361	Gas Well	P	9	16	S	9	E
43-007-30580-00-00	UTAH 09-412	Gas Well	P	9	15	S	10	E
43-007-30605-00-00	UTAH 09-413	Gas Well	P	9	15	S	10	E
43-007-30657-00-00	UTAH 09-450	Gas Well	P	9	15	S	10	E
43-007-30722-00-00	UTAH 09-453	Gas Well	P	9	15	S	10	E
43-007-30302-00-00	UTAH 10-01-36	Gas Well	P	10	15	S	9	E
43-007-30298-00-00	UTAH 10-219	Gas Well	P	10	15	S	9	E
43-007-30432-00-00	UTAH 10-220	Gas Well	P	10	15	S	9	E
43-007-30303-00-00	UTAH 10-221	Gas Well	P	10	15	S	9	E
43-007-30228-00-00	UTAH 11-50	Gas Well	P	11	15	S	9	E
43-007-30229-00-00	UTAH 11-51	Gas Well	P	11	15	S	9	E
43-007-30230-00-00	UTAH 11-52	Gas Well	P	11	15	S	9	E
43-007-30231-00-00	UTAH 11-53	Gas Well	P	11	15	S	9	E
43-007-30467-00-00	UTAH 1-209	Gas Well	P	1	15	S	8	E
43-007-30210-00-00	UTAH 12-15-37	Gas Well	P	12	15	S	9	E
43-007-30232-00-00	UTAH 12-54	Gas Well	P	12	15	S	9	E
43-007-30233-00-00	UTAH 12-55	Gas Well	P	12	15	S	9	E
43-007-30234-00-00	UTAH 12-56	Gas Well	P	12	15	S	9	E
43-015-30493-00-00	UTAH 13-376	Gas Well	P	13	16	S	8	E
43-015-30301-00-00	UTAH 13-550	Gas Well	P	13	16	S	8	E
43-007-30243-00-00	UTAH 13-65	Gas Well	P	13	15	S	9	E
43-007-30244-00-00	UTAH 13-66	Gas Well	P	13	15	S	9	E
43-007-30245-00-00	UTAH 13-67	Gas Well	P	13	15	S	9	E
43-007-30246-00-00	UTAH 13-68	Gas Well	P	13	15	S	9	E
43-007-30439-00-00	UTAH 13-92	Gas Well	P	13	14	S	9	E
43-007-30220-00-00	UTAH 1-42	Gas Well	P	1	15	S	9	E
43-007-30221-00-00	UTAH 1-43	Gas Well	P	1	15	S	9	E
43-007-30222-00-00	UTAH 1-44	Gas Well	P	1	15	S	9	E
43-007-30223-00-00	UTAH 1-45	Gas Well	P	1	15	S	9	E
43-015-30330-00-00	UTAH 14-551	Gas Well	P	14	16	S	8	E
43-015-30331-00-00	UTAH 14-552	Gas Well	P	14	16	S	8	E
43-007-30239-00-00	UTAH 14-61	Gas Well	P	14	15	S	9	E
43-007-30240-00-00	UTAH 14-62	Gas Well	P	14	15	S	9	E
43-007-30241-00-00	UTAH 14-63	Gas Well	P	14	15	S	9	E
43-007-30242-00-00	UTAH 14-64	Gas Well	P	14	15	S	9	E
43-015-30334-00-00	UTAH 15-553	Gas Well	P	15	16	S	8	E
43-007-30416-00-00	UTAH 17-101	Gas Well	P	17	15	S	10	E
43-007-30277-00-00	UTAH 17-102	Gas Well	P	17	15	S	10	E

Utah Well List as of 12/26/02

API Well Number	Well Name	Well Type	Well Status	Sec	Twpn	Twpd	Rngn	Rngd
43-007-30255-00-00	UTAH 24-80	Gas Well	P	24	15	S	9	E
43-007-30256-00-00	UTAH 24-81	Gas Well	P	24	15	S	9	E
43-007-30267-00-00	UTAH 24-86	Gas Well	P	24	15	S	9	E
43-007-30375-00-00	UTAH 24-87	Gas Well	P	24	15	S	9	E
43-007-30227-00-00	UTAH 2-49	Gas Well	P	2	15	S	9	E
43-007-30157-00-00	UTAH 25-11-7	Gas Well	P	25	14	S	9	E
43-007-30399-00-00	UTAH 25-134	Gas Well	P	25	15	S	9	E
43-007-30400-00-00	UTAH 25-252	Gas Well	P	25	15	S	9	E
43-007-30401-00-00	UTAH 25-253	Gas Well	P	25	15	S	9	E
43-007-30402-00-00	UTAH 25-254	Gas Well	P	25	15	S	9	E
43-007-30600-00-00	UTAH 25-389	Gas Well	P	25	14	S	8	E
43-007-30599-00-00	UTAH 25-390	Gas Well	P	25	14	S	8	E
43-007-30658-00-00	UTAH 25-391	Gas Well	P	25	14	S	8	E
43-007-30602-00-00	UTAH 25-392	Gas Well	P	25	14	S	8	E
43-007-30206-00-00	UTAH 25-4-33	Gas Well	P	25	14	S	9	E
43-015-30519-00-00	UTAH 25-577	Gas Well	P	25	16	S	8	E
43-007-30156-00-00	UTAH 25-7-6	Gas Well	P	25	14	S	9	E
43-007-30204-00-00	UTAH 26-11-25	Gas Well	P	26	14	S	9	E
43-007-30205-00-00	UTAH 26-1-23	Gas Well	P	26	14	S	9	E
43-007-30181-00-00	UTAH 26-16-8	Gas Well	P	26	14	S	9	E
43-007-30446-00-00	UTAH 26-255	Gas Well	P	26	15	S	9	E
43-007-30445-00-00	UTAH 26-256	Gas Well	P	26	15	S	9	E
43-007-30444-00-00	UTAH 26-257	Gas Well	P	26	15	S	9	E
43-007-30514-00-00	UTAH 26-267	Gas Well	P	26	15	S	9	E
43-015-30541-00-00	UTAH 26-580	Gas Well	P	26	16	S	8	E
43-015-30542-00-00	UTAH 26-581	Gas Well	P	26	16	S	8	E
43-015-30544-00-00	UTAH 26-583	Gas Well	P	26	16	S	8	E
43-007-30202-00-00	UTAH 26-6-24	Gas Well	P	26	14	S	9	E
43-007-30395-00-00	UTAH 27-187	Gas Well	P	27	14	S	9	E
43-007-30292-00-00	UTAH 27-188	Gas Well	P	27	14	S	9	E
43-007-30457-00-00	UTAH 27-268	Gas Well	P	27	15	S	9	E
43-007-30458-00-00	UTAH 27-269	Gas Well	P	27	15	S	9	E
43-007-30712-00-00	UTAH 27-457	Gas Well	P	27	14	S	8	E
43-007-30714-00-00	UTAH 27-458	Gas Well	P	27	14	S	8	E
43-007-30777-00-00	UTAH 27-520	Gas Well	P	27	14	S	8	E
43-015-30545-00-00	UTAH 27-584	Gas Well	P	27	16	S	8	E
43-007-30193-00-00	UTAH 27-8-29	Gas Well	P	27	14	S	9	E
43-007-30186-00-00	UTAH 27-9-30	Gas Well	P	27	14	S	9	E
43-007-30396-00-00	UTAH 28-189	Gas Well	P	28	14	S	9	E
43-007-30397-00-00	UTAH 28-190	Gas Well	P	28	14	S	9	E
43-007-30293-00-00	UTAH 28-191	Gas Well	P	28	14	S	9	E
43-007-30294-00-00	UTAH 28-192	Gas Well	P	28	14	S	9	E
43-007-30551-00-00	UTAH 28-320	Gas Well	P	28	15	S	9	E
43-007-30560-00-00	UTAH 28-321	Gas Well	P	28	15	S	9	E
43-007-30405-00-00	UTAH 29-193	Gas Well	P	29	14	S	9	E
43-007-30427-00-00	UTAH 29-194	Gas Well	P	29	14	S	9	E
43-007-30739-00-00	UTAH 29-339	Gas Well	P	29	15	S	9	E
43-007-30740-00-00	UTAH 29-340	Gas Well	P	29	15	S	9	E
43-007-30741-00-00	UTAH 29-341	Gas Well	P	29	15	S	9	E
43-007-30742-00-00	UTAH 29-342	Gas Well	P	29	15	S	9	E
43-007-30262-00-00	UTAH 30-125	Gas Well	P	30	14	S	10	E
43-007-30185-00-00	UTAH 30-13-14	Gas Well	P	30	14	S	10	E
43-007-30265-00-00	UTAH 30-195	Gas Well	P	30	14	S	9	E
43-007-30344-00-00	UTAH 30-196	Gas Well	P	30	14	S	9	E

Utah Well List as of 12/26/02

API Well Number	Well Name	Well Type	Well Status	Sec	Twpn	Twpd	Rngn	Rngd
43-007-30178-00-00	UTAH 36-1-2	Gas Well	P	36	14	S	9	E
43-007-30341-00-00	UTAH 36-135	Gas Well	P	36	15	S	9	E
43-007-30343-00-00	UTAH 36-136	Gas Well	P	36	15	S	9	E
43-007-30342-00-00	UTAH 36-137	Gas Well	P	36	15	S	9	E
43-007-30315-00-00	UTAH 36-162	Gas Well	P	36	14	S	8	E
43-007-30316-00-00	UTAH 36-163	Gas Well	P	36	14	S	8	E
43-007-30317-00-00	UTAH 36-164	Gas Well	P	36	14	S	8	E
43-007-30318-00-00	UTAH 36-165	Gas Well	P	36	14	S	8	E
43-007-30144-00-00	UTAH 36-9-5	Gas Well	P	36	14	S	9	E
43-015-30341-00-00	UTAH 4-280	Gas Well	P	4	16	S	9	E
43-015-30342-00-00	UTAH 4-282	Gas Well	P	4	16	S	9	E
43-007-30384-00-00	UTAH 5-205	Gas Well	P	5	15	S	9	E
43-007-30269-00-00	UTAH 5-94	Gas Well	P	5	15	S	10	E
43-007-30270-00-00	UTAH 5-95	Gas Well	P	5	15	S	10	E
43-007-30271-00-00	UTAH 5-96	Gas Well	P	5	15	S	10	E
43-007-30217-00-00	UTAH 6-38	Gas Well	P	6	15	S	10	E
43-007-30218-00-00	UTAH 6-39	Gas Well	P	6	15	S	10	E
43-007-30219-00-00	UTAH 6-40	Gas Well	P	6	15	S	10	E
43-007-30254-00-00	UTAH 6-41	Gas Well	P	6	15	S	10	E
43-007-30235-00-00	UTAH 7-57	Gas Well	P	7	15	S	10	E
43-007-30236-00-00	UTAH 7-58	Gas Well	P	7	15	S	10	E
43-007-30237-00-00	UTAH 7-59	Gas Well	P	7	15	S	10	E
43-007-30238-00-00	UTAH 7-60	Gas Well	P	7	15	S	10	E
43-007-30275-00-00	UTAH 8-100	Gas Well	P	8	15	S	10	E
43-007-30410-00-00	UTAH 8-230	Gas Well	P	8	15	S	9	E
43-007-30272-00-00	UTAH 8-97	Gas Well	P	8	15	S	10	E
43-007-30285-00-00	UTAH 8-98X	Gas Well	P	8	15	S	10	E
43-007-30274-00-00	UTAH 8-99	Gas Well	P	8	15	S	10	E
43-007-30413-00-00	UTAH 9-228	Gas Well	P	9	15	S	9	E
43-007-30414-00-00	UTAH 9-229	Gas Well	P	9	15	S	9	E
43-007-30279-00-00	WILLIAMS 30-78	Gas Well	P	30	14	S	10	E
43-007-30481-00-00	WOOLSTENHULME 05-266	Gas Well	P	5	15	S	10	E
43-015-30250-00-00	UTAH 16-110	Gas Well	Shut_In	16	16	S	9	E

FORM 9

STATE OF UTAH

DIVISION OF OIL, GAS AND MINING

ORIGINAL

SUNDRY NOTICES AND REPORTS ON WELLS

Do not use this form for proposals to drill new wells, deepen existing wells, or to reenter plugged and abandoned wells.
Use APPLICATION FOR PERMIT TO DRILL OR DEEPEN form for such proposals.

5. Lease Designation and Serial Number: UTU-60402

6. If Indian, Allottee or Tribe Name: N/A

7. Unit Agreement Name: UTU67921X Drunkards Wash

1. Type of Well: OIL ☐ GAS ☒ OTHER:

8. Well Name and Number: USA 14-417

2. Name of Operator: ConocoPhillips Company

9. API Well Number: 43-007-30647

3. Address and Telephone Number: 6825 South 5300 West, P.O. Box 851, Price, UT 84501 (435) 613-9777

10. Field or Pool, or Wildcat: Drunkards Wash

4. Location of Well Footages: 1741' FSL, 1054' FEL

QQ, Sec., T., R., M.: NE/SE , Sec.14, T15S, R08E, SLB&M

County: Carbon County

State: Utah

11. CHECK APPROPRIATE BOXES TO INDICATE NATURE OF NOTICE, REPORT, OR OTHER DATA

NOTICE OF INTENT
(Submit in Duplicate)

- ☐ Abandon
- ☐ Repair Casing
- ☐ Change of Plans
- ☐ Convert to Injection
- ☐ Fracture Treat or Acidize
- ☐ Multiple Completion
- ☐ Other
- ☐ New Construction
- ☐ Pull or Alter Csg
- ☐ Recomplete
- ☐ Reperforate
- ☐ Vent or Flare
- ☐ Water Shut-Off

Approximate date work will start

SUBSEQUENT REPORT
(Submit Original Form Only)

- ☐ Abandon *
- ☐ Repair Casing
- ☐ Change of Plans
- ☐ Convert to Injection
- ☐ Fracture Treat or Acidize
- ☒ Other Chemical/Flush Treatment
- ☐ New Construction
- ☐ Pull or Alter Csg
- ☐ Reperforate
- ☐ Vent or Flare
- ☐ Water Shut-Off

Date of work completion 08/17/2004

Report results of Multiple Completions and Recompletions to different reservoirs on WELL COMPLETION OR RECOMPLETION REPORT AND LOG form.

* Must be accompanied by a cement verification report.

12. DESCRIBE PROPOSED OR COMPLETED OPERATIONS (Clearly state all pertinent details, and give pertinent dates. If well is directionally drilled, give subsurface locations and measured and true vertical depths for all markers and zones pertinent to this work.)

Please be advised that the above referenced well was chemically treated with 250 gallons of HCL & 5040 gallons of Coalstim on 8/17/2004.

RECEIVED
OCT 01 2004
DIV. OF OIL, GAS & MINING

13.

Name & Signature: Lynnette Allred L. Allred

Title: Sr. Operations Assistant

Date: 09/28/04

(This space for state use only)

(4/94) (See Instructions on Reverse Side)

Form 3160-5
(April 2004)

UNITED STATES
DEPARTMENT OF THE INTERIOR
BUREAU OF LAND MANAGEMENT

FORM APPROVED
OMB No. 1004-0137
Expires: March 31, 2007

SUNDRY NOTICES AND REPORTS ON WELLS

Do not use this form for proposals to drill or to re-enter an abandoned well. Use Form 3160-3 (APD) for such proposals.

SUBMIT IN TRIPLICATE- Other instructions on reverse side.

5. Lease Serial No. U-60402
6. If Indian, Allottee or Tribe Name N/A
7. If Unit or CA/Agreement, Name and/or No. Drunkards Wash UTU-67921X
8. Well Name and No. USA 14-417
9. API Well No. 43-007-30647
10. Field and Pool, or Exploratory Area Drunkards Wash
11. County or Parish, State Carbon, Utah

1. Type of Well: ☐ Oil Well ☒ Gas Well ☐ Other
2. Name of Operator: ConocoPhillips Company
3a. Address: P. O. Box 51810, Midland, Texas 79710-1810
3b. Phone No. *(include area code)*: 432-688-6943
4. Location of Well *(Footage, Sec., T., R., M., or Survey Description)*: Surf. Loc. 1741' FSL, 1054' FEL, Sec. 14, T15S, R8E NE/SE

12. CHECK APPROPRIATE BOX(ES) TO INDICATE NATURE OF NOTICE, REPORT, OR OTHER DATA

TYPE OF SUBMISSION	TYPE OF ACTION			
☐ Notice of Intent	☐ Acidize	☐ Deepen	☐ Production (Start/Resume)	☐ Water Shut-Off
☒ Subsequent Report	☐ Alter Casing	☐ Fracture Treat	☐ Reclamation	☐ Well Integrity
☐ Final Abandonment Notice	☐ Casing Repair	☐ New Construction	☐ Recomplete	☒ Other Remedial work
	☐ Change Plans	☐ Plug and Abandon	☐ Temporarily Abandon	
	☐ Convert to Injection	☐ Plug Back	☐ Water Disposal	

13. Describe Proposed or Completed Operation (clearly state all pertinent details, including estimated starting date of any proposed work and approximate duration thereof. If the proposal is to deepen directionally or recomplete horizontally, give subsurface locations and measured and true vertical depths of all pertinent markers and zones. Attach the Bond under which the work will be performed or provide the Bond No. on file with BLM/BIA. Required subsequent reports shall be filed within 30 days following completion of the involved operations. If the operation results in a multiple completion or recompletion in a new interval, a Form 3160-4 shall be filed once testing has been completed. Final Abandonment Notices shall be filed only after all requirements, including reclamation, have been completed, and the operator has determined that the site is ready for final inspection.)

1/26/07: SIRU. ND unit, test tbg. POOH w/rods, LD 3-7/8 rods and old pump. PU new pump and RIH w/3-1.5 weight bars and rods, adding guides to entire string. Seat pump, fill and test. NU unit, function test pump. RD.

14. I hereby certify that the foregoing is true and correct
Name *(Printed/Typed)*: Donna Williams
Title: Sr. Regulatory Specialist
Signature:
Date: 3/27/07

THIS SPACE FOR FEDERAL OR STATE OFFICE USE

Approved by _____ Title _____ Date _____

Conditions of approval, if any, are attached. Approval of this notice does not warrant or certify that the applicant holds legal or equitable title to those rights in the subject lease which would entitle the applicant to conduct operations thereon. Office

Title 18 U.S.C. Section 1001 and Title 43 U.S.C. Section 1212, make it a crime for any person knowingly and willfully to make to any department or agency of the United States any false, fictitious or fraudulent statements or representations as to any matter within its jurisdiction.

(Instructions on page 2)

RECEIVED
APR 0 2 2007
DIV. OF OIL, GAS & MINING