Form 3160-3
(December 1990)

SUBMIT IN TRIPLICATE*
(Other instructions on reverse side)

Form approved.
Budget Bureau No. 1004-0136
Expires: December 31, 1991

UNITED STATES
DEPARTMENT OF THE INTERIOR
BUREAU OF LAND MANAGEMENT

APPLICATION FOR PERMIT TO DRILL OR DEEPEN

5. LEASE DESIGNATION AND SERIAL NO.: U-61154

6. IF INDIAN, ALLOTTEE OR TRIBE NAME: N/A

7. UNIT AGREEMENT NAME: Drunkards Wash

8. FARM OR LEASE NAME, WELL NO.: USA 26-424

9. API WELL NO.:

10. FIELD AND POOL, OR WILDCAT: Drunkards Wash

1a. TYPE OF WORK: DRILL [X] DEEPEN [ ]

b. TYPE OF WELL: OIL WELL [ ] GAS WELL [X] OTHER SINGLE ZONE [X] MULTIPLE ZONE [ ]

2. NAME OF OPERATOR: RIVER GAS CORPORATION

3. ADDRESS AND TELEPHONE NO.: 1305 So. 100 E. Price, Utah 84501 (435) 637-8876

4. LOCATION OF WELL (Report location clearly and in accordance with any State requirements.*)
At surface: 1757' FNL, 680' FWL
At proposed prod. zone:

4,381,076 N
500,012 E

11. SEC., T., R., M., OR BLK. AND SURVEY OR AREA: SW/4, NW/4, Sec.26, T14S, R8E, SLB&M

14. DISTANCE IN MILES AND DIRECTION FROM NEAREST TOWN OR POST OFFICE*: 10.25 miles west of Price, Utah.

CONFIDENTIAL

12. COUNTY OR PARISH: Carbon

13. STATE: Utah

15. DISTANCE FROM PROPOSED* LOCATION TO NEAREST PROPERTY OR LEASE LINE, FT. (Also to nearest drig. unit line, if any): 680'

16. NO. OF ACRES IN LEASE: 4909.79 Acres

17. NO. OF ACRES ASSIGNED TO THIS WELL: 160 acres

18. DISTANCE FROM PROPOSED LOCATION TO NEAREST WELL, DRILLING, COMPLETED, OR APPLIED FOR, ON THIS LEASE, FT.: 3150'

19. PROPOSED DEPTH: 3900'

20. ROTARY OR CABLE TOOLS: Rotary

21. ELEVATIONS (Show whether DF, RT, GR, etc.): 7004.2' GR

22. APPROX. DATE WORK WILL START*: May 2001

23. PROPOSED CASING AND CEMENTING PROGRAM

SIZE OF HOLE	GRADE, SIZE OF CASING	WEIGHT PER FOOT	SETTING DEPTH	QUANTITY OF CEMENT
15"	12-3/4"	Conductor	40'	
11"	J-55 8-5/8"	24 #/ft	350'	135 sks G+2% CaCl + 1/4# per sack flocel
7-7/8"	N-80 5-1/2"	17 #/ft	2890'	360 sks 50/50 POZ +8%gel+2%CaCl+10%extender. 90 sks "G" thixotropic

Federal Approval of this Action Is Necessary

RECEIVED
SEP 20 1999
DIV. OF OIL, GAS & MINING

IN ABOVE SPACE DESCRIBE PROPOSED PROGRAM: If proposal is to deepen, give data present productive zone and proposed new productive zone. If proposal is to drill or deepen directionally, give pertinent data on subsurface locations and measured and true vertical depths. Give blowout preventer program, if any.

24.

SIGNED Cal Hurtt TITLE Development Manager DATE 9/16/99

(This space for Federal or State office use)

PERMIT NO. 43-007-30620 APPROVAL DATE

Application approval does not warrant or certify that the applicant holds legal or equitable title to those rights in the subject lease which would entitle the applicant to conduct operations thereon.
CONDITIONS OF APPROVAL, IF ANY:

APPROVED BY Bradley G. Hill TITLE BRADLEY G. HILL RECLAMATION SPECIALIST III DATE 10/4/99

***See Instructions On Reverse Side**

Title 18 U.S.C. Section 1001, makes it a crime for any person knowingly and willfully to make to any department or agency or the United States any false, fictitious or fraudulent statements or representations as to any matter within its jurisdiction.

Range 8 East

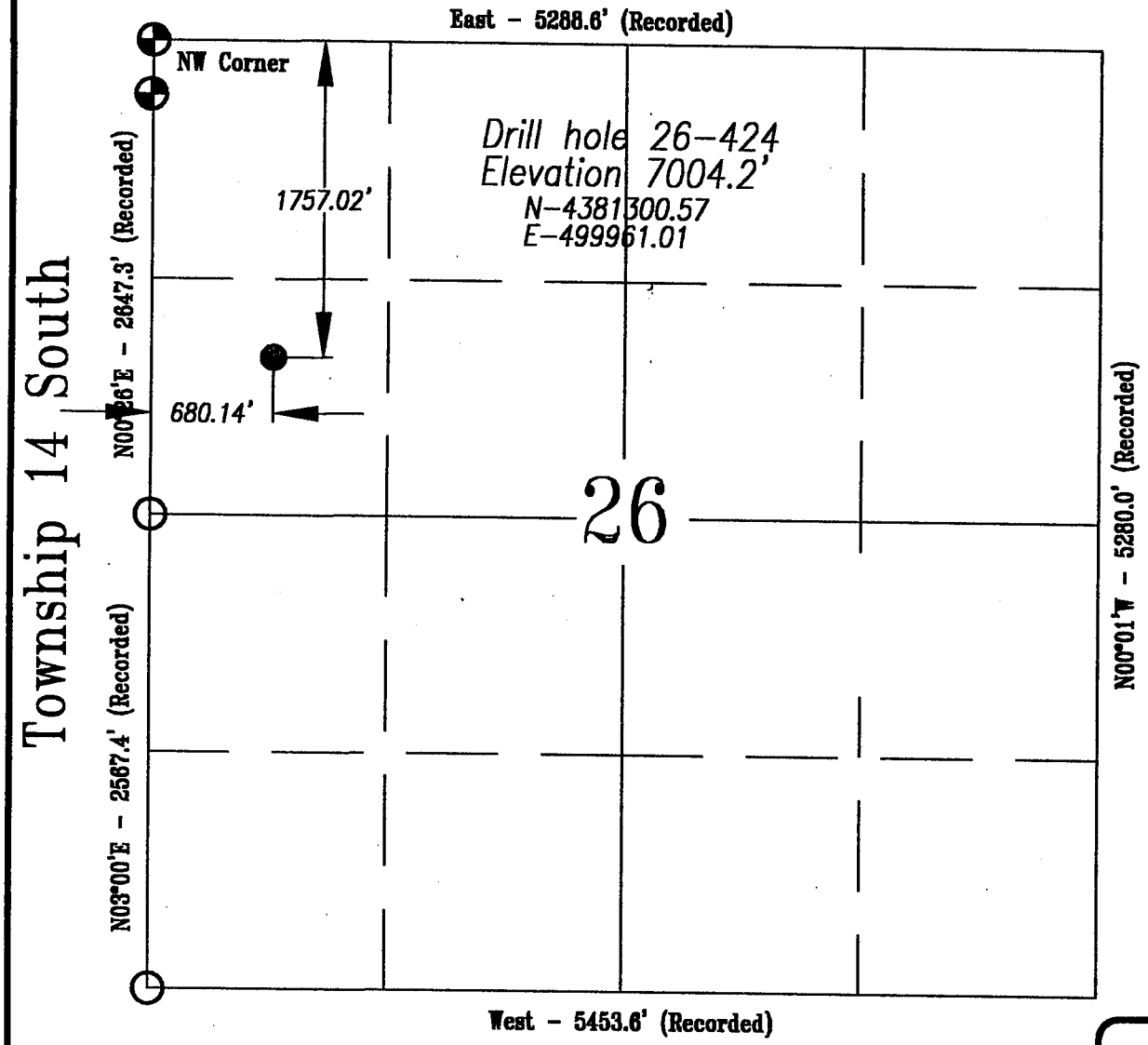

Location

The Bearings Indicated are per the recorded plat obtained from the U.S. Land Office. The well location was determined using a Trimble 4400 GPS Unit.

Basis Of Elevation:

Basis of Elevation of 7014' as indicated on the NE Corner of Section 27, Township 14 South, Range 8 East, Salt Lake Base and Meridian, as indicated on the Wattis Quadrangle 7.5 Minute Series Map.

Description of Location:

Proposed Drill Hole located in the SW 1/4, NW 1/4 of Section 26; being 1757.02' South and 680.146' East from the NW Corner of Section 26, T14S, R8E, Salt Lake Base & Meridian.

Surveyor's Certificate:

I, John S. Huefner, a Registered Licensed Land Surveyor, holding Certificate #144842, State of Utah, do hereby certify that the information on this drawing is a true and accurate survey of the land, and was conducted under my personal supervision, as shown hereon.

Registered Professional Engineer
No. 144842
John S. Huefner
State of Utah
9.9.99
Registered Land Surveyor

LEGEND:

- ● *Drill Hole Location*
- ⊕ *Found Section Corner Monumented w/ Brass Cap unless noted otherwise*
- ○ *Brass Cap (Searched, Not Found)*

SCALE:

250' 0' 500' 1000'

DRAWN BY: P. BOYLEN	Castle Valley Services 3266 South 125 West Price, Utah 84501 (801) 637-9300 FAX (801) 637-2833
CHECKED BY: J.S.H.	
DATE: 9/3/99	
SCALE: 1"=1000'	
JOB NO. 534	River Gas Corporation Well# 26-424 Section 26, T14S, R8E, S.L.B.&M. Carbon County, Utah
DRAWING NO. A-1	
SHEET 1 OF 4	

RGC

RIVER GAS CORPORATION
UTAH OPERATIONS
1305 South 100 East
Price, Utah 84501
Bus. (435) 637-8876
FAX (435) 637-8924

September 17,1999

Mr. Eric Jones
Petroleum Engineer
Bureau of Land Management
82 E. Dogwood
Moab, Utah 84532

RECEIVED
SEP 20 1999
DIV. OF OIL, GAS & MINING

RE: Application for Permit to Drill
USA 26-424 SW/4, NW/4 Sec. 26
T14S, R8E, SLB&M, Carbon County, Utah

Dear Eric:

Enclosed is the original of the *Application for Permit to Drill* (APD) for the above named well. Included with the APD is the following information:

Exhibit "A"-Survey Plat of the Proposed Well Site;

Exhibit "B"-Proposed Locations Map with Pipeline, Power, and Road Access;

Exhibit "C"-Drilling Site Layout;

Exhibit "D"-On-site Inspection Checklist;

Exhibit "E"-Production Site Layout;

Exhibit "F"-Typical Road Cross-section;

Exhibit "G"-BOP Diagram;

Exhibit "H"-Typical Wellhead Manifold.

COPY

CONFIDENTIAL

This well is located more than 460' from the exterior boundary of the Drunkards Wash Federal Unit and from the boundary of any uncommitted tract within the Drunkards Wash Federal Unit and will not require administrative approval in accordance with Utah Administrative Code Rule R649-3-3.

Please accept this letter as River Gas Corporation's written request for confidential treatment of all information contained in and pertaining to this permit application, if said information is eligible for such consideration.

Thank you very much for your timely consideration of this application. Please feel free to contact me if you have any questions.

Sincerely,

Cal Hurtt

Cal Hurtt
Development Manager

cc: Mr. Don Stephens, BLM, Price, Utah
Mr. Chuck Snure, Texaco
Mr. R.A. Lamarre, Texaco
Mr. Gee Lake, Jr., Dominion Resources
Mr. John Baza, DOGM
Mrs. Tammie Butts, River Gas Corporation
RGC Well File

UT-060-3160-1
December, 1992

Bureau of Land Management
Moab District
Application for Permit to Drill
On-Site Inspection Checklist

Company River Gas Corporation Well No. USA 26-424

Location: Sec. 24, T14 S, R8E, Lease No. _____

On-Site Inspection Date: 8/26/99

All operations will be conducted in such a manner that full compliance is made with applicable laws, regulations (43 CFR 3100), Onshore Oil and Gas Orders, the approved plan of operations and the conditions of approval. The operator is fully responsible for the actions of his subcontractors. A copy of these conditions will be furnished to the field representative to ensure compliance.

A. DRILLING PROGRAM

1. Surface Formation and Estimated Formation Tops:
   Surface formation: Upper Mancos Shale
   Estimated top of Ferron Formation: 3375'

2. Estimated Depth at Which Oil, Gas, Water or Other Mineral Bearing Zones are Expected to be Encountered

	Depth	Formation
Expected Oil Zones: none		
Expected Gas Zones: Ferron Coal Interval: 3400-3550		
Expected Water Zones: 3400-3550		
Expected Mineral Zones: none		

All fresh water and prospectively valuable minerals encountered during drilling will be recorded by depth and will be cased and cemented. When possible, water flow rates will be measured and samples will be taken and analyzed. All oil and gas shows will be tested to determine commercial potential.

3. Pressure Control Equipment- include schematics of the BOP and choke manifold, and describe testing procedures: Quick Test is contracted to test the manifold, blind rams, and B.O.P to 2000 psi. Surface casing is tested to 1 psi/ft. See attachment.

   BOP systems will be consistent with API RP 53 and Onshore Oil and Gas Order No. 2. Pressure tests of the surface casing and all BOP equipment potentially subject to pressure will be conducted before drilling the surface casing shoe. Blowout preventer controls will be installed prior to drilling the surface casing shoe and will remain in use until the well is completed or abandoned. Ram preventers shall be inspected and operated each trip (no more than once a day is necessary), and annular preventers shall be inspected and operated weekly to ensure good mechanical working order. These inspections shall be recorded in the drilling log and in the daily drilling report.

4. Casing Program and Auxiliary Equipment - include casing size, weight, grade, thread and coupling, setting depth and condition (new or acceptably reconditioned): Approximately 2890' of 5-1/2",N-80 17#/ft production casing will be installed 10% of the above setting depth will be 8-5/8", 24#/ft. J-55 surface casing.

5. Cement-include the cement type, density, yield, additives and amount used in setting each casing string. Also include the anticipated cement fill-up. If stage cementing, describe techniques: See cement design.

6. Mud Program and Circulating Medium- include mud components and weights. When air drilling, also include: length and location of blooie line; description of the auto ignitor; description of the deduster equipment; and amounts, types and characteristics of stand-by mud: Hole will be drilled with air.

7. Coring, Logging and Testing Program: Bulk Density, Gamma, Neutron Density, Resistivity and Caliper logs will be ran.
Initial opening of drill stem test tools will be restricted to daylight hours.

8. Abnormal Conditions, Bottom Hole Pressures and Potential Hazards- include anticipated bottomhole pressure and/or pressure gradient: No abnormal conditions are anticipated, formation is slightly over-pressured, estimated BHP; 1552 PSI.

9. Any Other Aspects of this Proposal that should be Addressed:

B. THIRTEEN POINT SURFACE USE PLAN

The dirt contractor will be provided with an approved copy of the surface use plan of operations before initiating construction.

1. Existing Roads:

   a. Proposed route to location (submit a map depicting access and well location).

   b. Location of proposed well in relation to town or other reference point: 10.25 Miles west of Price, Utah.

   c. Contact the County Road Department for use of county roads. The use of Carbon County roads will require an encroachment permit from the Carbon County Road Department.

   d. Plans for improvement and/or maintenance of existing roads: Upgrade and maintain existing state or county roads.

   e. Other:

2. Planned Access Roads:

   a. Location (centerline): Proposed USA 26-424, 1757' FNL, 680' FWL

   b. Length of new access to be constructed: 4500'

   c. Length of existing roads to be upgraded: 4500'

   d. Maximum total disturbed width: 45'

e. Maximum travel surface width: 20'

f. Maximum grades: 4%

g. Turnouts: none

h. Surface materials: In-place residual of Mancos Shale

i. Drainage (crowning, ditching, culverts, etc): Roads will be crowned with water ditches on both sides. Water will be diverted around pad as necessary and 6 culverts will be required.

j. Cattleguards: 1

k. Length of new and/or existing roads which lie outside the lease boundary for which a BLM right-of-way is required: N/A

l. Other:

Surface disturbance and vehicular travel will be limited to the approved location access road. Any additional area needed must be approved by the Area Manager advance.

If a right-a-way is necessary, no surface disturbing activities shall take place on the subject right-of-way until the associated APD is approved. The holder will adhere to conditions of approval in the Surface Use Program of the approved APD, relevant to any right-of-way facilities.

If a right-of-way is secured, boundary adjustments in the lease or unit shall automatically amend this right-of-way to include that portion of the facility no longer contained within the lease or unit. In the event of an automatic amendment to this right-of-way grant, the prioron-lease/unit conditions of approval of this facility will not be affected even though they would now apply to facilities outside of the lease/unit as a result of a boundary adjustment. Rental fees, if appropriate shall be recalculated based on the conditions of this grant and the regulations in effect at the time of an automatic amendment.

If the well is productive, the access road will be rehabilitated or brought to Resource (Class III) Road Standards within 60 days of dismantling the rig. If upgraded, the access road must be maintained at these standards until the well is properly abandoned. If this time frame cannot be met, the Area Manager will be notified so that temporary drainage control can be installed along the access road.

3. Location of Existing Wells-on a map, show the location of all water, injection, disposal, producing and drilling wells within a one mile radius of the proposed well, and describe the status of each: See Attachment "B"

4. Location of Production Facilities:

a. On-site facilities: See Attachment "E"

b. Off-site facilities: none

c. Pipelines: N/A

All permanent (in place for six months or longer) structures constructed or installed (including oil well pump jacks) will be painted a flat, nonreflective color to match the standard environmental colors, as determined by the Rocky Mountain Five-State Interagency Committee. All facilities will be painted within six months of installation. Facilities required by comply with the Occupational Safety and Health Act (OSHA) may be excluded. Colors will be as follows:

All site security guidelines identified in 43 CFR § 3163.7-5 and Onshore Oil and Gas Order No. 3 Colors will be as follows:

If a gas meter run is constructed, it will be located on lease within 500 feet of the wellhead. The gas flowline will be buried from the wellhead to the meter and will be buried downstream of the meter until it leaves the pad. Meter runs will be housed and/or fenced. The gas meter shall be calibrated prior to first sales and shall be calibrated quarterly thereafter. All gas production and measurement shall comply with the provisions of 43 CFR § 3162. 7-3, Onshore Oil and Gas Order No. 5, and American Gas Association (AGA) Report No. 3.

If a tank battery is constructed on this lease, it will be surrounded by a dike of sufficient capacity to contain 1 ½ times the storage capacity of the largest tank. All loading lines and valves will be placed inside the berm surrounding the tank battery. All oil production and measurement shall conform to the provisions of 43 CFR § 3162.7-3 and Onshore Oil and Gas Order No. 4

Production facilities on location may include a lined or unlined produced water pit as specified in NTL-2B. If water is produced from the well, an NTL-2B application must be submitted.

5. Location and Type of Water Supply:

All water needed for drilling purposes will be obtained from (describe location and/or show on a map): PRWID

A temporary water use permit for this operation will be obtained from the Utah State Engineer in Price, Utah at (801) 637-1303.

Water obtained on private land, or land administered by another agency, will require approval from the owner or agency for use of the land.

6. Source of Construction Material:

Pad construction material will be obtained from (if the source is Federally owned, show location on a map): Private Owner
The use of materials under BLM jurisdiction will conform to 43 CFR 3610.2-3.

7. Methods of Handling Waste Disposal:

Describe the methods and locations proposed for safe containment and disposal of waste material, e.g. cuttings, produced water, garbage, sewage, chemicals, etc.

The reserve pit will be lined with (native material, bentonite, synthetic material): Pit will be lined with native material unless otherwise designated by BLM officers prior to construction.

The reserve pit will be located: west end of the location, and the pit walls will be sloped at no greater than 2 to 1.

The reserve pit shall be located in cut material, with at least 50% of the pit volume being below original ground level. Three sides of the reserve pit will be fenced before drilling starts. The fourth side will be fenced as soon as drilling is completed, and shall remain until the pit is dry. As soon as the reserve pit has dried, all areas not needed for production will be rehabilitated.

Trash must be contained in a trash cage and hauled away to an approved disposal site as necessary but no later than at the completion of drilling operations.

8. Ancillary Facilities: Garbage containers and portable toilets.

9. Well Site Layout - depict the pit, rig, cut and fill, topsoil, etc. on a plat with a scale of at least 1" = 50'.

All well, whether drilling, producing, suspended, or abandoned, will be identified in accordance with 43 CFR 3162.6.

Access to the well pad will be from: west side of location.

The blooie line will be located: in the west, at least 100 feet from the well head.

To minimize the amount of fugitive dust and spray escaping from the blooie pit, the following blooie line deflection method will be employed: Water injection.

10. Plans for Restoration of the Surface:

The top 6 inches of topsoil material will be removed from the location and stockpiled separately on: adjacent land.

Topsoil along the access road will be reserved in place adjacent to the road.

Immediately upon completion of drilling, all equipment that is not necessary for production shall removed.

The reserve pit and that portion of the location not needed for production will be reclaimed.

Before any dirt work to restore the location takes place, the reserve pit must be completely dry.

Reclaimed roads will have the berms and cuts reduced and will be closed to vehicle use.

All disturbed areas will be recontoured to replicate the natural slope.

The stockpiled topsoil will be evenly distributed over the disturbed area.

Prior to reseeding, all disturbed areas, including the access roads, will be scarified and left with a rough surface.

Seed will be broadcast or drilled between Sept. and Nov., or at a time specified by the BLM. If broadcast, a harrow or some other implement will be dragged over the seeded area to assure seed coverage.

The following seed mixture will be used:

BLM recommended mixture.

The abandonment marker will be one of the following, as specified by BLM:

1) at least four feet above ground level,
2) at restored ground level, or
3) below ground level.

In any case the marker shall be inscribed with the following: operator name, lease number, well name and surveyed description (township, range, section and either quarter-quarter or footages).

Additional requirements:

11. Surface and Mineral Ownership: BLM

12. Other Information:

a. Archeological Concerns: none

The operator is responsible for informing all persons in the area who are associated with this project that they will be subject to prosecution for knowingly disturbing historic or archaeological sites, or for collecting artifacts. If historic or archaeological materials are uncovered during construction, the operator is to immediately stop work that might further disturb such materials, and contact the authorized officer (AO). Within five (5) working days, the AO will inform the operator as to:

- whether the materials appear eligible for the National Register of Historic Places;

- the mitigation measures the operator will likely have to undertake before the site can be used (assuming in situ preservation is not necessary); and

- a time frame for the AO to complete an expedited review under 36 CFR 800.11 to confirm, through the State Historic Preservation Officer, that the findings of the AO are correct and that mitigation is appropriate.

If the operator wishes, at any time, to relocate activities to avoid the expense of mitigation and/or the delays associated with this process, the AO will assume responsibility for whatever recordation and stabilization of the exposed materials may be required. Otherwise, the operator will be responsible for mitigation costs. The AO will provide technical and procedural guidelines for the conduct of mitigation. Upon verification from the AO that the required mitigation has been completed, the operator will then be allowed to resume construction.

b. Threatened and Endangered Species Concerns: No

c. Wildlife Seasonal Restrictions (yes/no): yes

d. Off Location Geophysical Testing: N/A

e. Drainage crossings that require additional State or Federal approval: N/A

13. Lessee's or Operator's Representative and Certification

Representative:

Name: Cal Hurtt

Title: Development Manager

Address: 1305 South 100 East
Price, Utah 84501

Phone No: (435)637-8876

Certification:

I hereby certify that I, or persons under my direct supervision, have inspected the proposed drill site and access route; that I am familiar with the conditions which currently exists; that the statements make in this APD package are, to the best of my knowledge, true and correct; and that the work associated with the operations proposed herein will be performed by RGC and its contractors and subcontractors in conformity with this APD package and the terms and conditions under which it is approved. I also certify responsibility for the operations conducted on that portion of the leased lands associated with this application, with bond coverage being provided under BLM bond no. S304604. This statement is subject to the provisions of 18 U.S.C. 1001 for the filing of a false statement.

Cal Hurtt
Signature

Development Manager
Title

9/17/99
Date

C. REQUIRED APPROVALS, REPORTS AND NOTIFICATIONS

Required verbal notifications are summarized in Table 1, attached.

Building Location- Contact the Resource Area, Natural Resource Protection Specialist at least 24 hours prior to commencing construction of location.

Spud- The spud date will be reported to the Resource Area Office 24 hours prior to spudding. Written notification in the form of a Sundry Notice (Form 3160-5) will be submitted the District Office within 24 hours after spudding, regardless of whether spud was made with a dry hole digger or big rig.

Daily Drilling Reports- Daily drilling reports shall detail the progress and status of the well and shall be submitted to the District Office on a weekly basis.

Monthly Reports of Operations- In accordance with Onshore Oil and Gas Order No. 1, this well shall be reported on Minerals Management Service (MMS) Form 3160, "Monthly Report of Operations," starting the month in which operations commence and continuing each month until the well is physically plugged and abandoned. This report will be filed directly with MMS.

Sundry Notices- There will be no deviation from the proposed drilling and/or workover program without prior approval from the Assistant District Manager. "Sundry Notices and Reports on Wells: (Form 3160-5) will be filed for approval for all changes of plans and other operations in accordance with 43 CFR 3162.3-2. Safe drilling and operating practices must be observed.

Drilling Suspensions- Operations authorized by this permit shall not be suspended for more than 30 days without prior approval of the Authorized Officer. All conditions of this approval shall be applicable during any operations conducted with a replacement rig.

Undesirable Events- Spills, blowouts, fires, leaks, accidents, or any other unusual occurrences shall be immediately reported to the Resource Area in accordance with requirements of NTL-3A.

Cultural Resources- If cultural resources are discovered during construction, work that might disturb the resources is to stop, and the Area Manager is to be notified.

First Production- Should the well be successfully completed for production, the Assistant District Manager, Minerals Division will be notified when the well is placed in producing status. Such notification may be made by phone, but must be followed by a sundry notice or letter not later than five (5) business days following the date on which the well is placed into production.

A first production conference will be scheduled as soon as the productivity of the well is apparent. This conference should be coordinated through the Resource Area Office. The Resource Area Office shall be notified prior to the first sale.

Well Completion Report- Whether the well is completed as a dry hole or as a producer, "Well Completion and Recompletion Report and Log" (Form 3160-4) will be submitted to the District Office not later than thirty (30) days after completion of the well or after completion of operations being performed, in accordance with 43 CFR 3162.4-1. Two copies of all logs, core descriptions, core analysis, well test data, gelogic summaries, sample description, and all other surveys or data obtained and compiled during the drilling, workover, and/or completion operations, will be filed with Form 3160-4. Samples (cuttings and/or samples) will be submitted when requested by the Assistant District Manager.

Venting/Flaring of Gas-NTL-4A allows venting/flaring of gas during the initial well evaluation period not to exceed 30 days or 50 MMcf. Venting/flaring beyond the initial test period threshold must be approved by the District Office.

Produced Water- Produced waste water may be confined to an unlined pit for a period not to exceed 90 days after initial production. During the 90 day period, an application for approval of a permanent disposal method and location, along with the required water anlysis, will be submitted to the Assistant District Manager for approval pursuant to NTL-2B.

Off-Lease Measurement, Storage, Commingling- Prior approval must be obtained from the Assistant District Manager for off-lease measurement, off-lease storage and/or commingling (either down-hole or at the surface).

Plugging and Abandonment- If the well is completed as a dry hole, plugging instructions must be obtained from the BLM, Moab District Office prior to initiating plugging operations. Table 1 of this document provides the after-hours phone numbers of personnel who are authorized to give plugging instructions.

A "Subsequent Report of Abandonment" (Form 3160-5) will be filed with the Assistant District Manager, Minerals Divisions within thirty (30) days following completion of the well for abandonment. This report will indicate where plugs were placed and the current status of surface restoration. Upon completion of approved plugging, a regulation marker will be erected in accordance with 43 CFR 3162.6. Final abandonment will not be approved until the surface reclamation work required by the approved APD or approved abandonment notice has been completed to the satisfaction of the Area Manager or his representative, or the appropriate surface managing agency.

TABLE 1
NOTIFICATIONS

Notify Don Stephens of the Price Resource Area, at (435)636-3608 for the following:

2 days prior to commencement of dirt work, construction or reclamation;

1 day prior to spudding;

50 feet prior to reaching surface and intermediate casing depths;

3 hours prior to testing BOPE;

12 hours prior to reaching kickoff point depth (if applicable).

If the person at the above number cannot be reached, notify the Moab District Office at (435) 259-6111. If unsuccessful, notify one of the people listed below.

Well abandonment operations require 24 hour advance notice and prior approval. In the case of newly drilled dry holes, verbal approval can be obtained by calling the Moab District Office, Branch of Fluid Minerals at (435) 259-6111. If approval is needed after work hours, you may contact the following:

Eric Jones, Petroleum Engineer	Office: (435) 259-6111 Home: (435) 259-2214

If unable to reach the above individuals, please call:

Lynn Jackson, Chief, Branch of Fluid Minerals	Office: (435) 259-6111 Home: (435) 259-7990

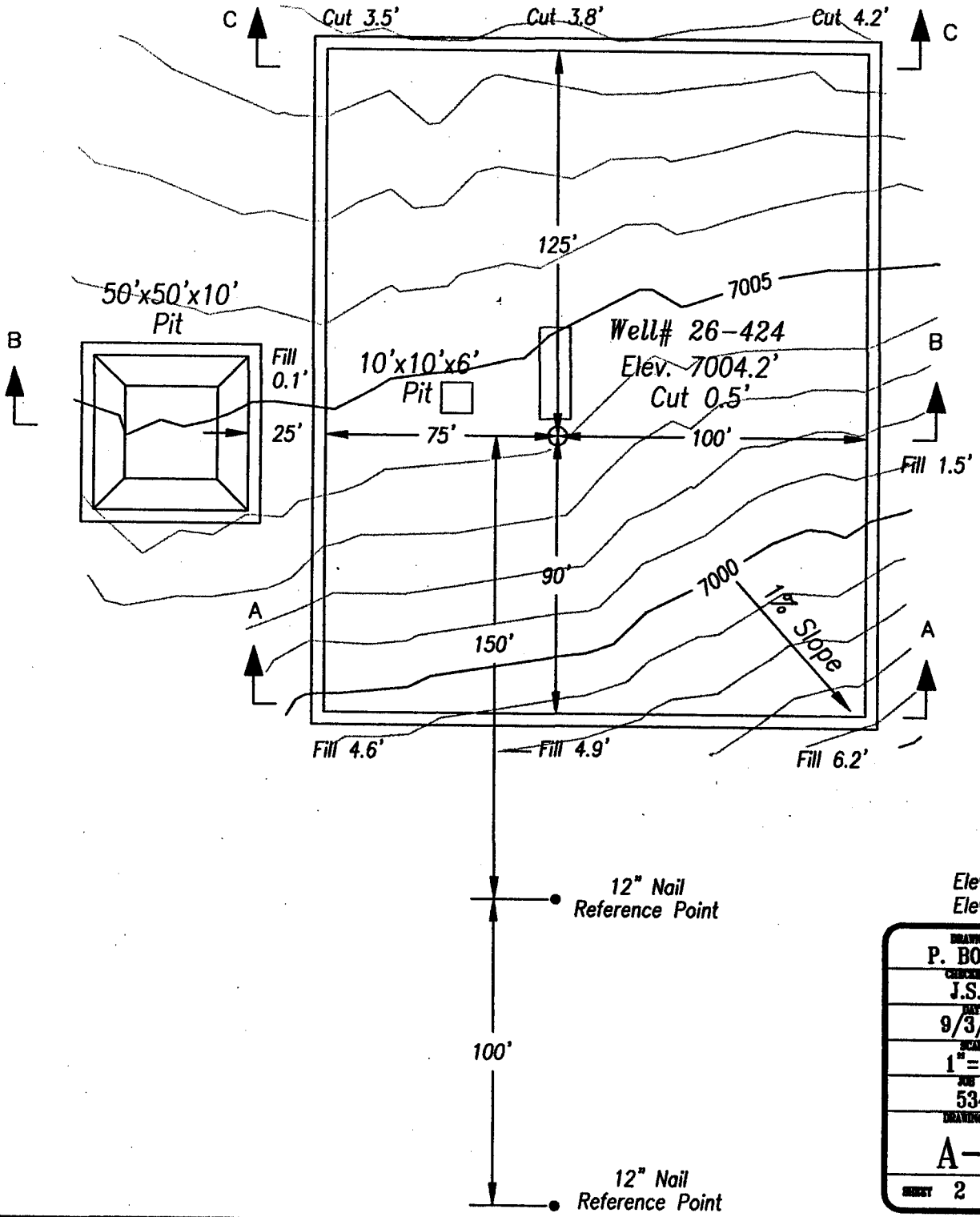

Elevation Ungraded Ground at Location Stake = 7004.2'
Elevation Graded Ground at Location Stake = 7003.7'

DRAWN BY: P. BOYLEN	Castle Valley Services 3266 South 125 West Price, Utah 84501 (801) 637-8300 FAX (801) 637-2833
CHECKED BY: J.S.H.	
DATE: 9/3/99	
SCALE: 1"=50'	
JOB NO. 534	River Gas Corporation Location Layout Section 26, T14S, R8E, S.L.B.&M. Well# 26-424
DRAWING NO. A-2	
SHEET 2 OF 4	

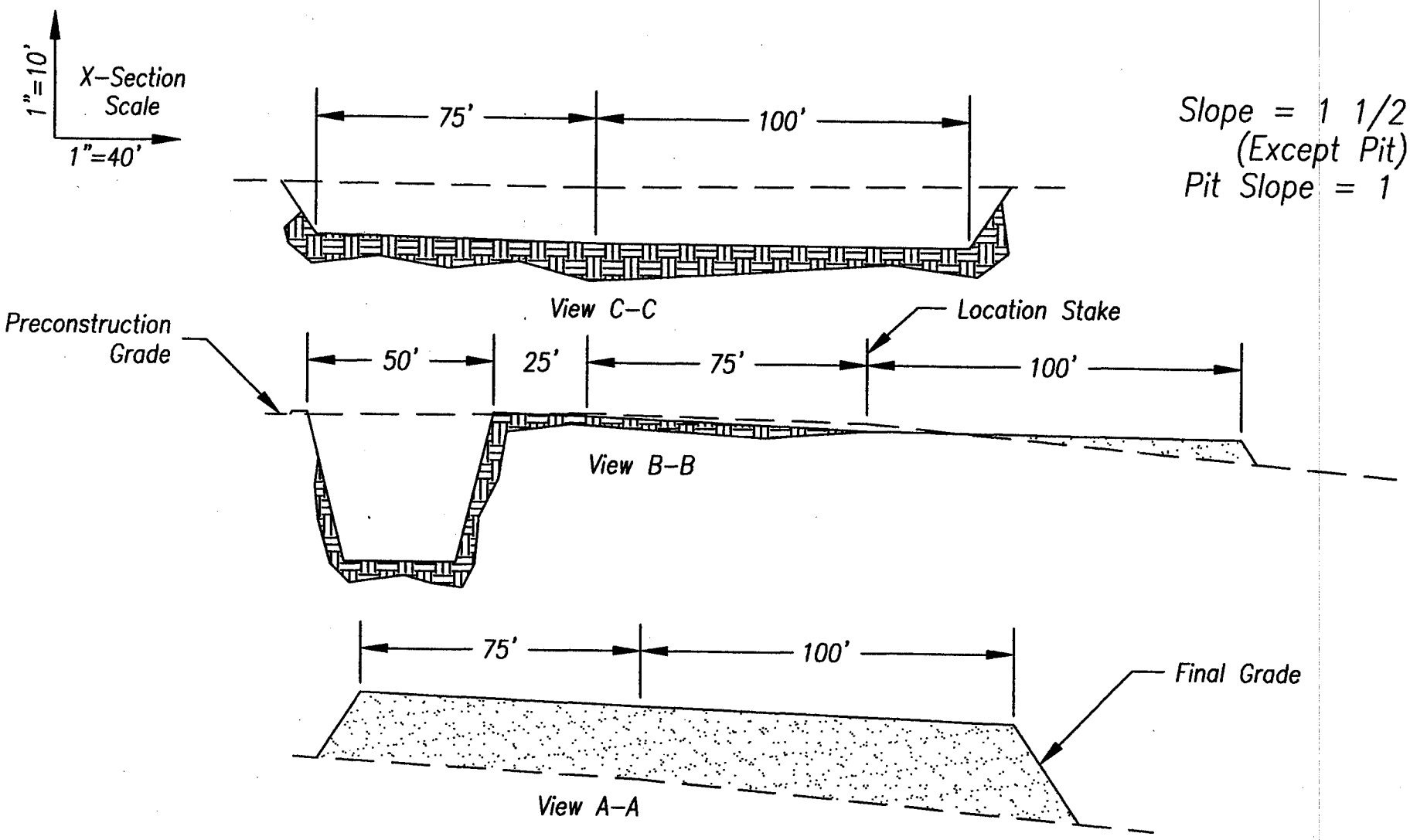

APPROXIMATE YARDAGES

CUT	
(6") Topsoil Stripping	= 750 Cu. Yds.
Remaining Location	= 2303.9 Cu. Yds.
TOTAL CUT	= 3,053.9 Cu. Yds.
TOTAL FILL	= 1742.71 Cu. Yds.

DRAWN BY: J. TIMOTHY	Castle Valley Services 3260 South 125 West Price, Utah 84501 (801) 637-9300 FAX (801) 637-2833
CHECKED BY: J.S.H.	
DATE: 9/3/99	
SCALE: As Shown	
JOB NO. 534	River Gas Corporation Typical Cross Sections Section 26, T14S, R8E, S.L.B.&M. Well# 26-424
DRAWING NO. C-1	
SHEET 3 OF 4	

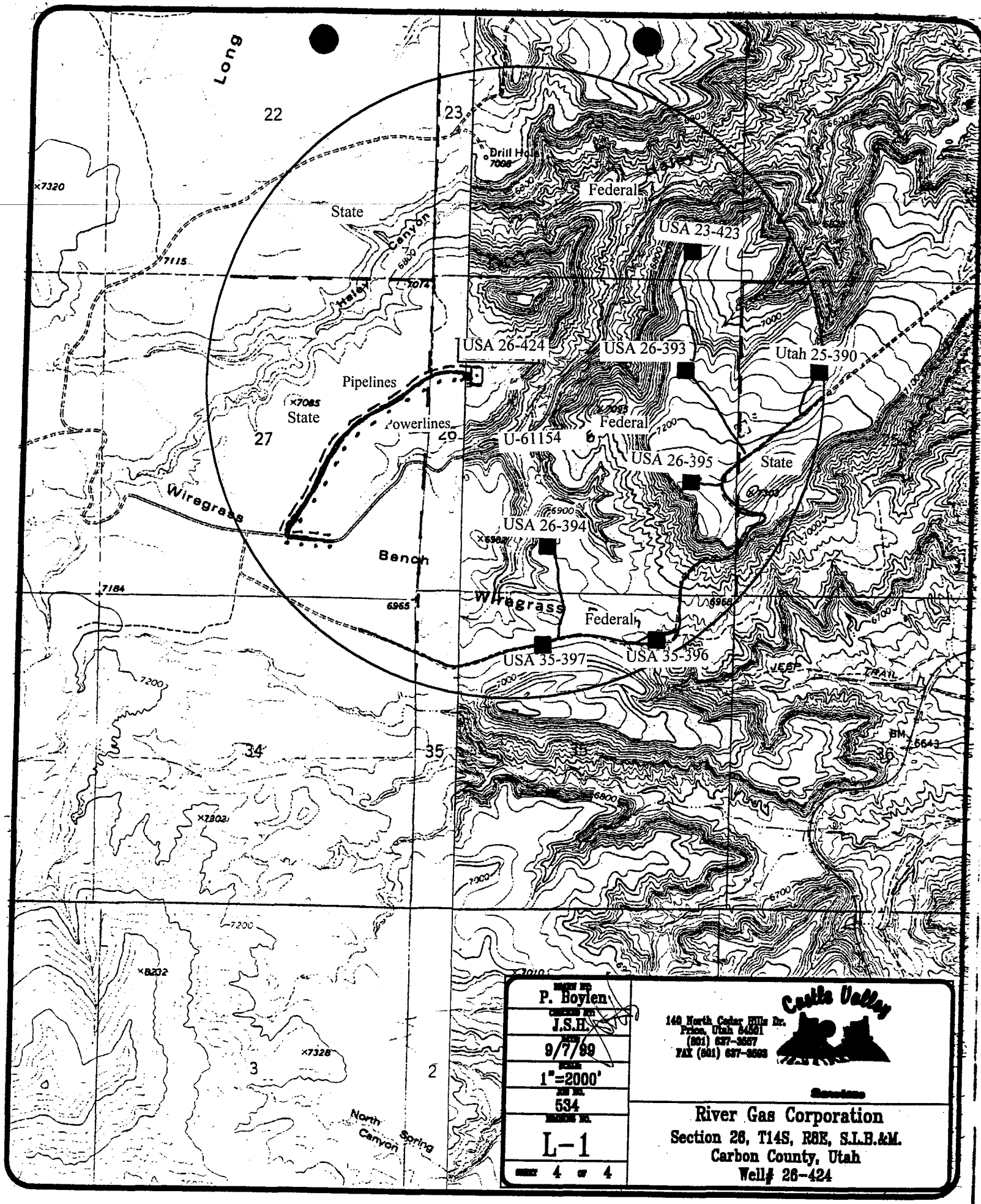
Long
22
23
Drill Hole
7008
Federal
State
Canyon
Haley
USA 23-423
USA 26-424
USA 26-393
Utah 25-390
Pipelines
State
Powerlines
27
26
U-61154
Federal
USA 26-395
State
Wiregrass
USA 26-394
Bench
Wiregrass
Federal
USA 35-397
USA 35-396
JEEP TRAIL
34
35
36
BM 6643
3
2
North Canyon
Spring
P. Boylen
J.S.H.
9/7/89
1"=2000'
534
L-1
4 of 4
Castle Valley
140 North Cedar Hills Dr.
Price, Utah 84501
(801) 637-3567
FAX (801) 637-3593
River Gas Corporation
Section 26, T14S, R8E, S.L.B.&M.
Carbon County, Utah
Well# 26-424

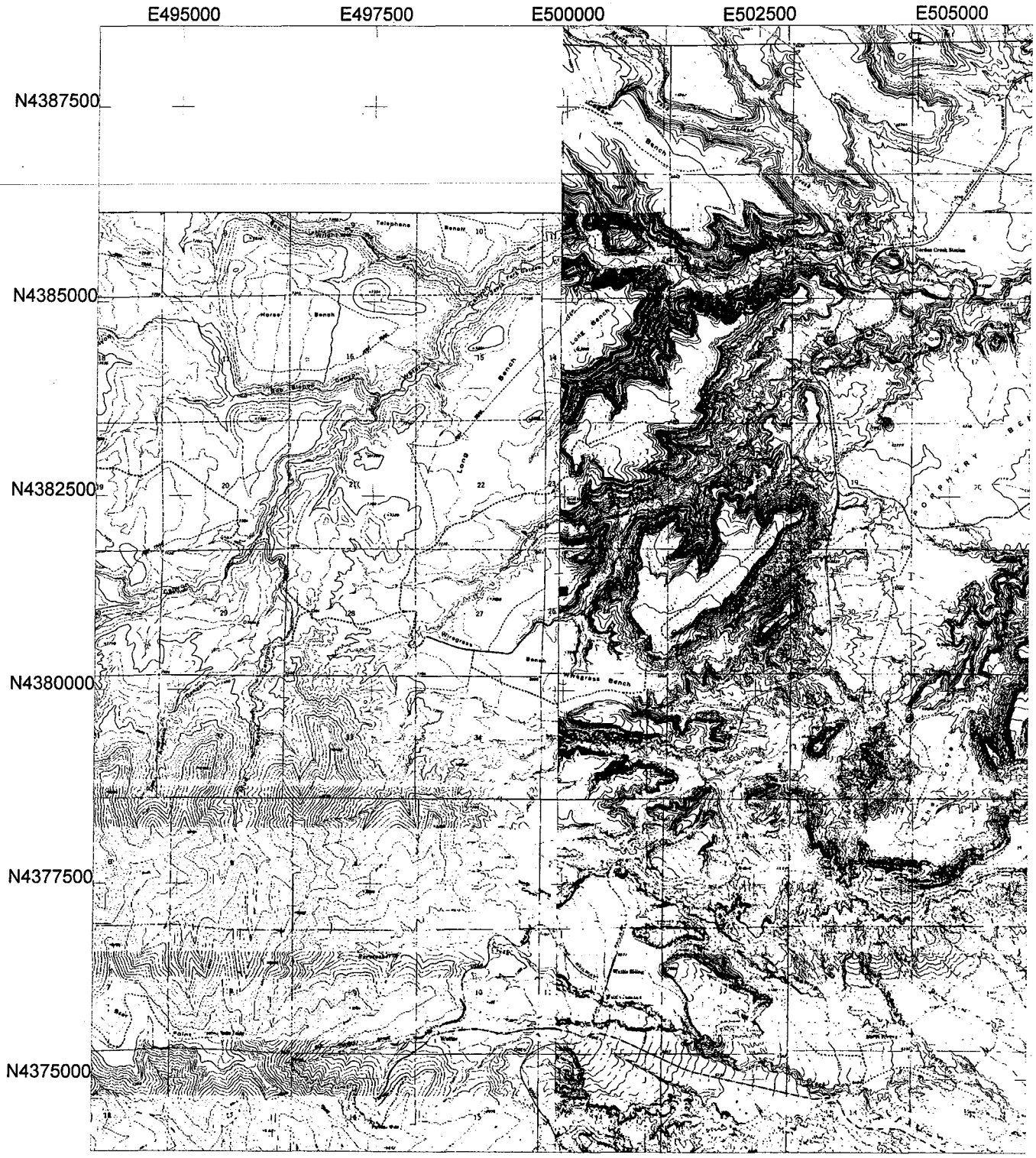

USA 26-424

Universal Transverse Mercator
North 12
NAD83 (Conus)

N

Scale 1:75000

0 8000

Feet

9/17/1999
Pathfinder Office™
Trimble

APPROXIMATE LAYOUT OF RIG & EQUIPMENT

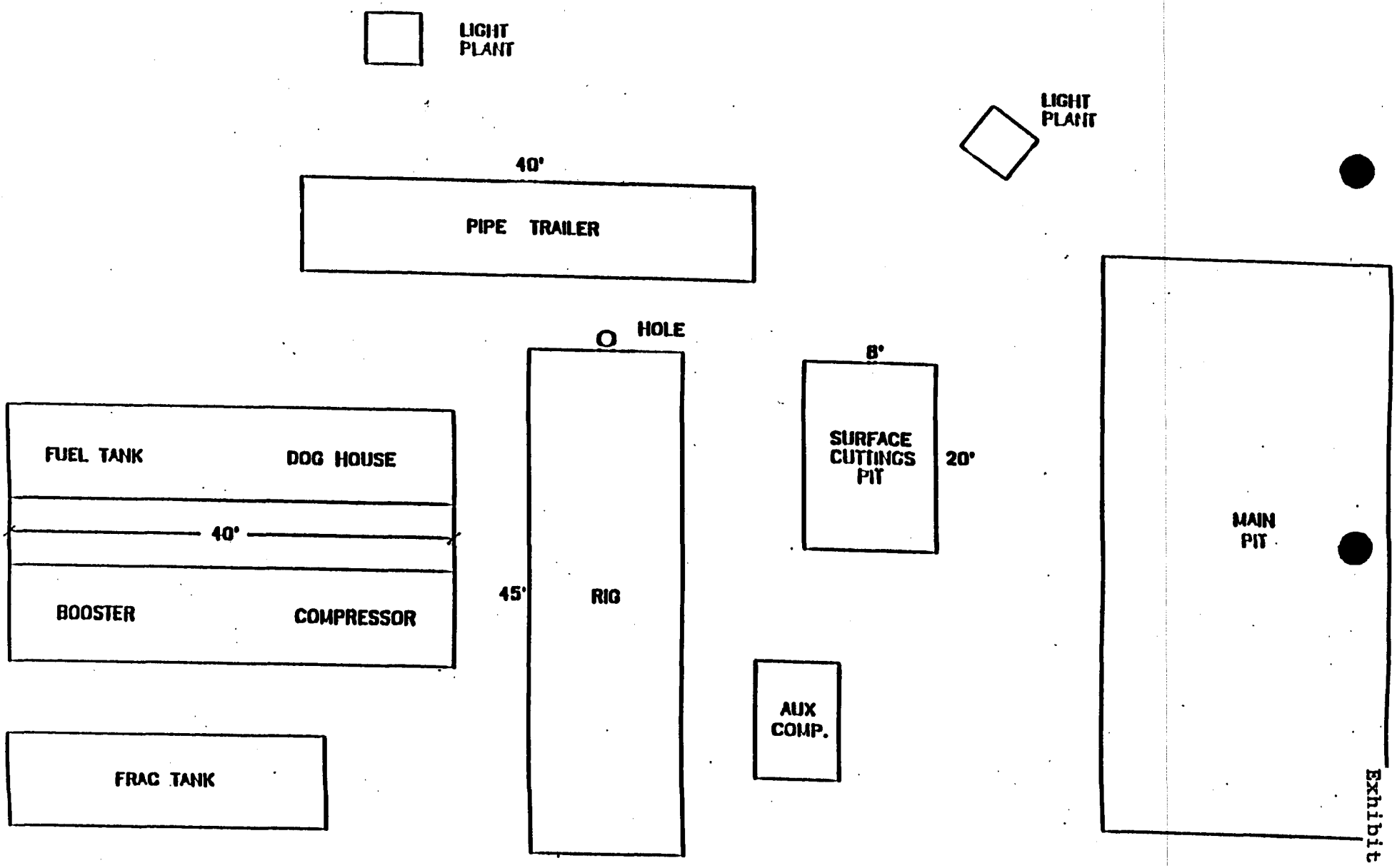

Exhibit "C"

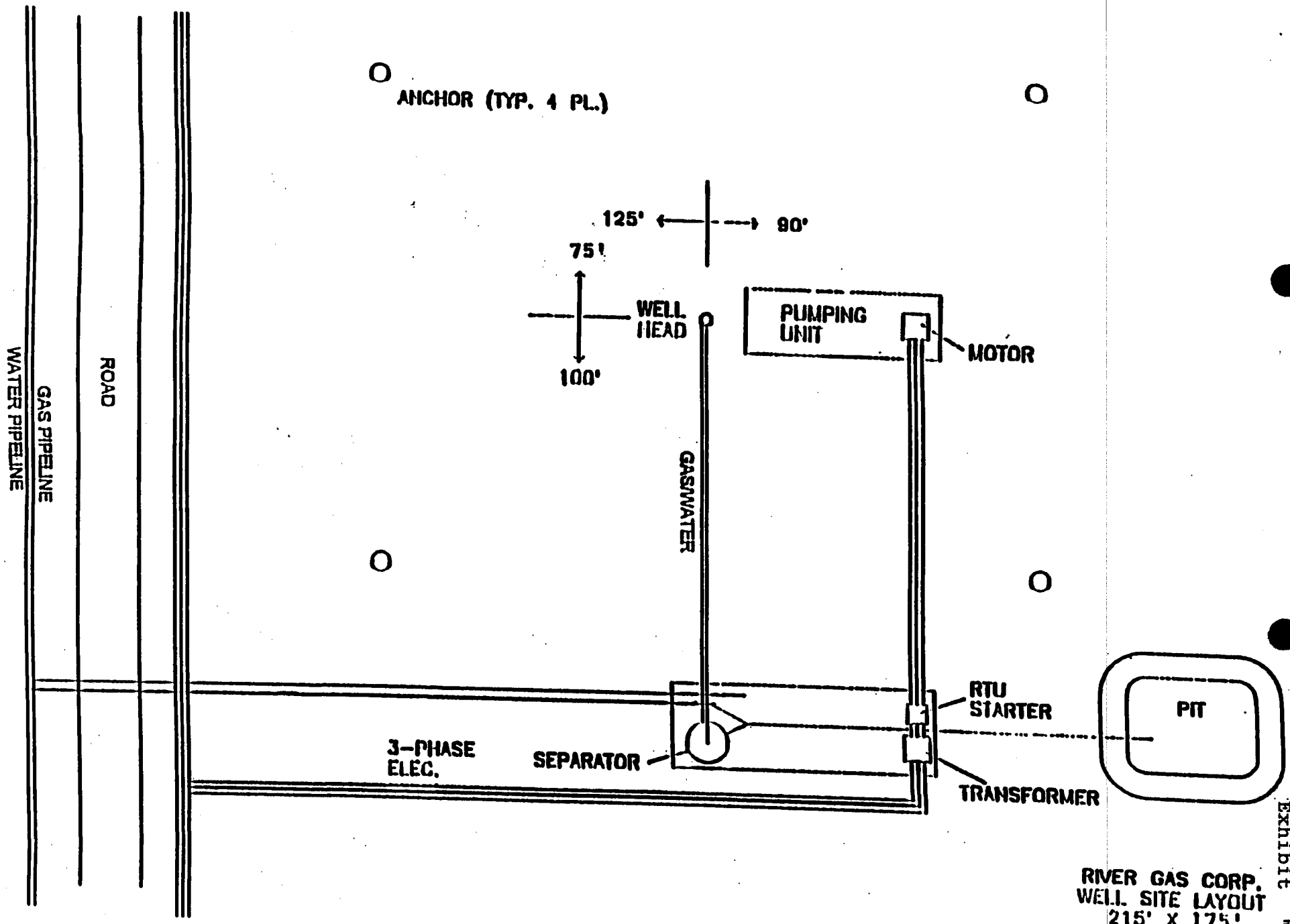

RIVER GAS CORP.
WELL SITE LAYOUT
215' X 175'

Exhibit "E"

TYPICAL ROAD CROSS-SECTION

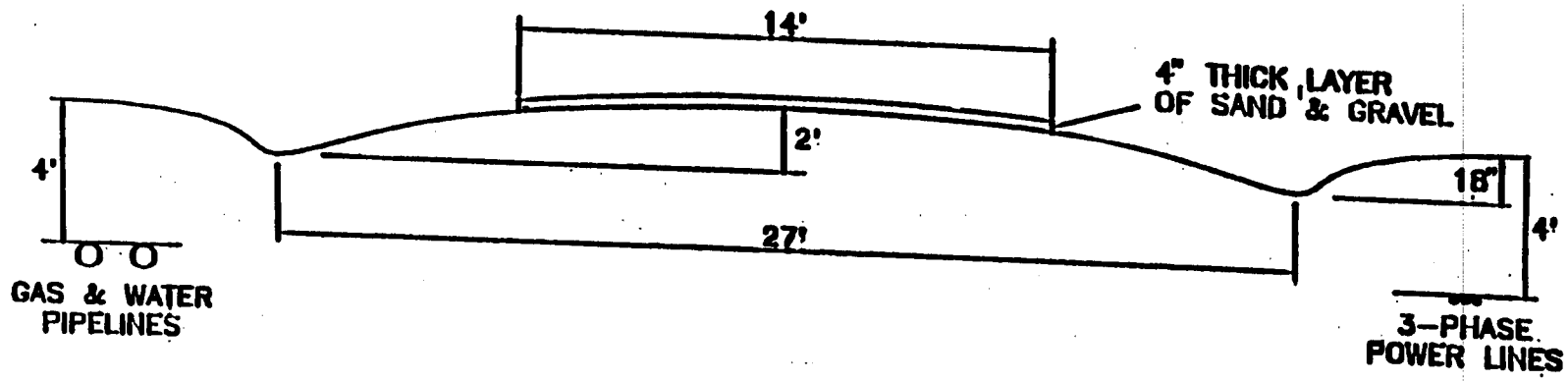

Exhibit "F"

Exhibit "G"

DIVERTER HEAD

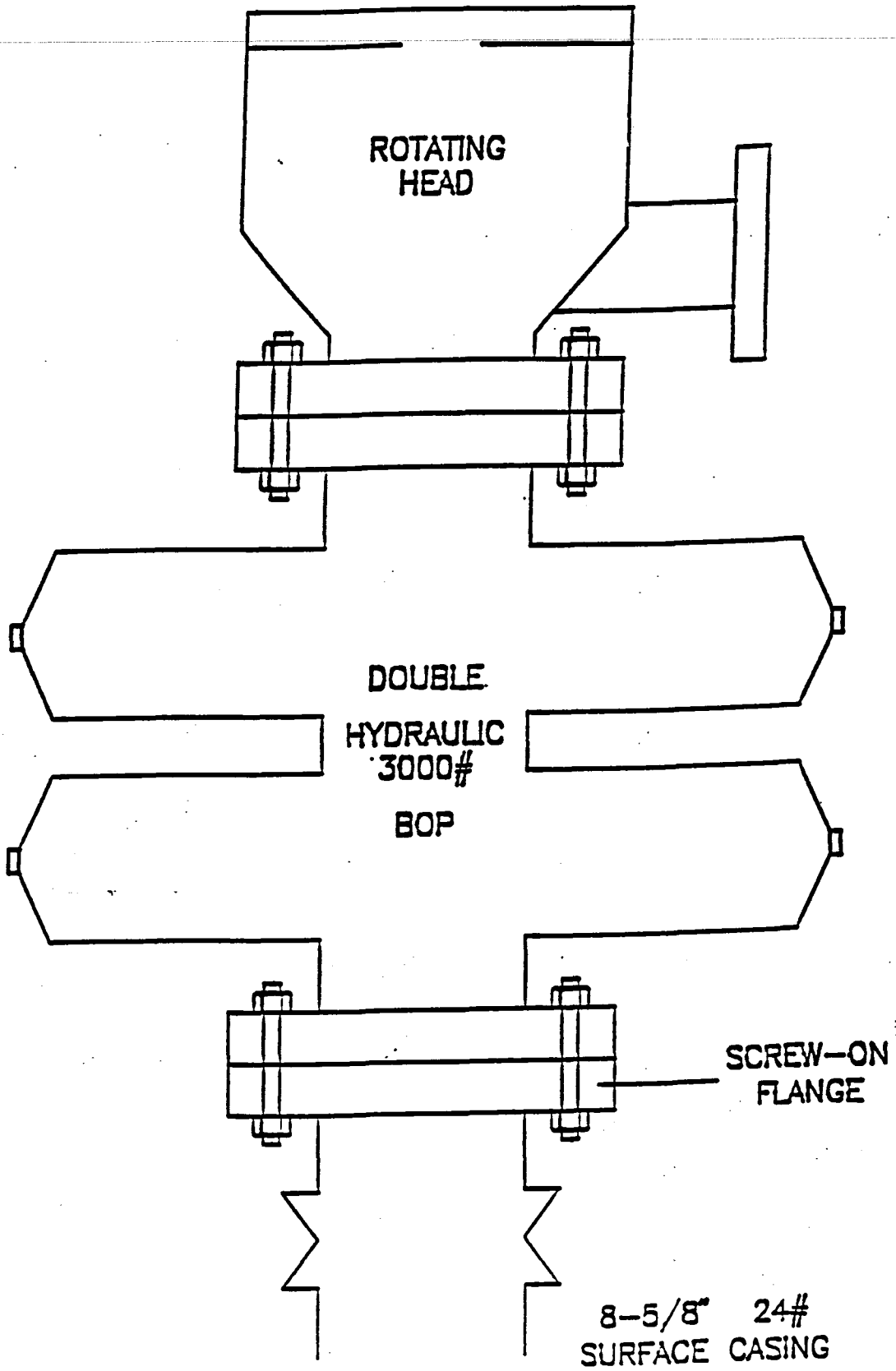

(1) 2" 5M FLANGED CHOKE
(2) 2" 5M GATE VALVE (FLANGED)
(3) 2" 5M STUDDED CROSS
(4) 2" 5M GATE VALVE (FLANGED)
(5) 2" 5M FLANGED CHOKE
(6) 2" 5M GATE VALVE (FLANGED)
(7) 2" LINE
(8) 2" 5M GATE VALVE (FLANGED)
(9) 3000# GAUGE

NOTE:
NUMBER 8 GATE VALVE SITS ON TOP OF MANIFOLD BETWEEN STUDDED CROSS AND 3000# GAUGE.

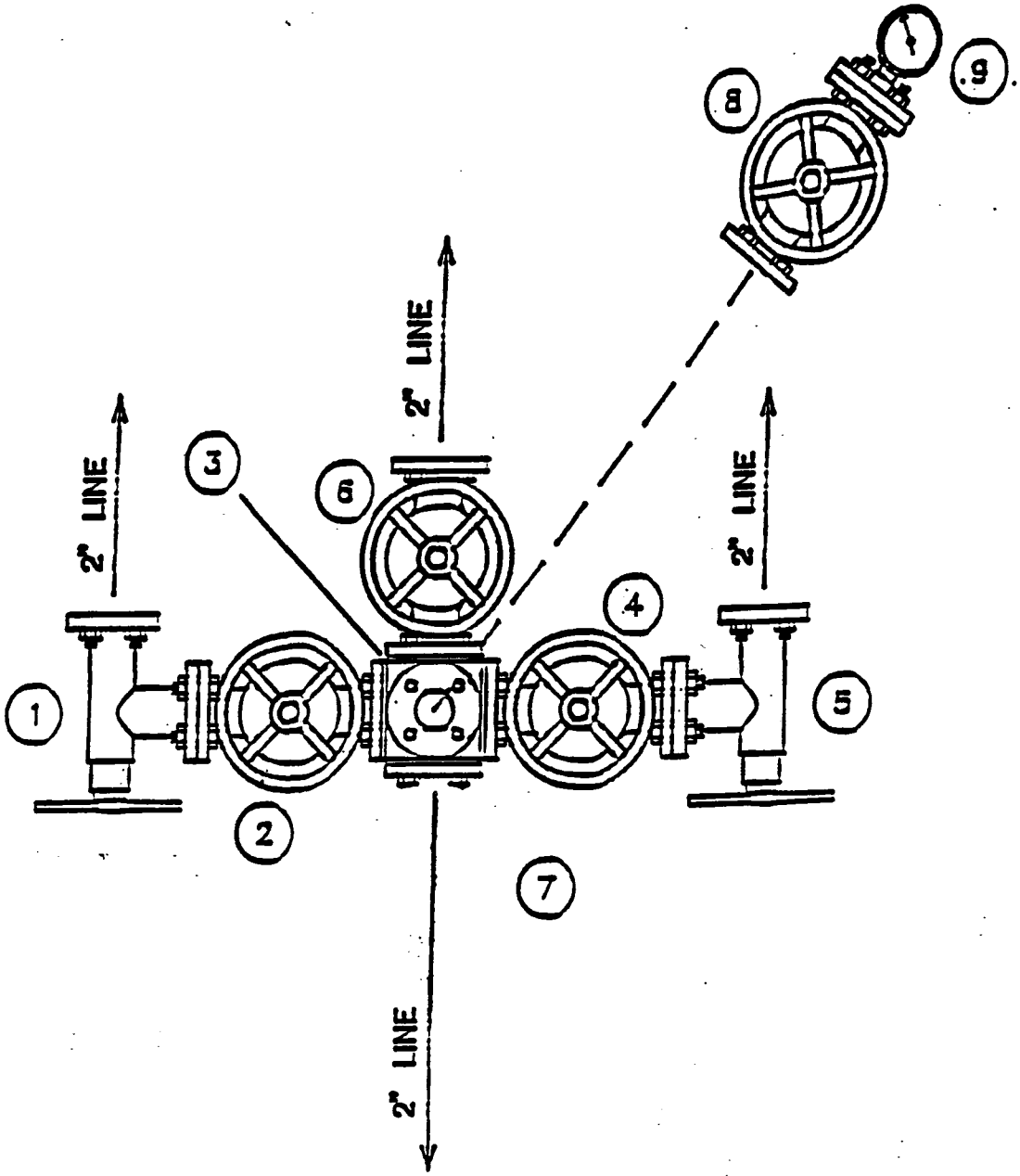

TO BOP

AND A NEW 2" BALL VALVE
FULL OPEN 5000PSI

MANIFOLD

WORKSHEET
APPLICATION FOR PERMIT TO DRILL

APD RECEIVED: 09/20/1999

API NO. ASSIGNED: 43-007-30620

WELL NAME: USA 26-424
OPERATOR: RIVER GAS CORPORATION (N1605)
CONTACT: Cal Hurtt (435)637-8876

PROPOSED LOCATION:
SWNW 26 - T14S - R08E
SURFACE: 1757-FNL-0680-FWL
BOTTOM: 1757-FNL-0680-FWL
CARBON COUNTY
UNDESIGNATED FIELD (002)

LEASE TYPE: FED
LEASE NUMBER: U-61154
SURFACE OWNER: Federal

PROPOSED FORMATION: FRSD

INSPECT LOCATN BY: / /		
TECH REVIEW	Initials	Date
Engineering		
Geology		
Surface		

RECEIVED AND/OR REVIEWED:

✓ Plat
✓ Bond: Fed[✓] Ind[] Sta[] Fee[]
(No. 5304604)
N Potash (Y/N)
N Oil Shale (Y/N) *190-5(B)
✓ Water Permit
(No. PRWID)
N RDCC Review (Y/N)
(Date:)

N/A Fee Surf Agreement (Y/N)

LOCATION AND SITING:

___ R649-2-3. Unit Drunkards Wash
___ R649-3-2. General
Siting:
___ R649-3-3. Exception
✓ Drilling Unit
Board Cause No: 243-2 (160')
Eff Date: 7-13-99
Siting: 460' fr. Unit Boundary & Uncommitted Tract
___ R649-3-11. Directional Drill

COMMENTS:

STIPULATIONS: (1) FEDERAL APPROVAL

Division of Oil, Gas & Mining

OPERATOR: RIVER GAS CORPORATION (N1605)

FIELD: UNDESIGNATED (002)

SEC. 26 & 34, T14S, R8E

COUNTY: CARBON CAUSE No: 243-2 VACATED 243-1

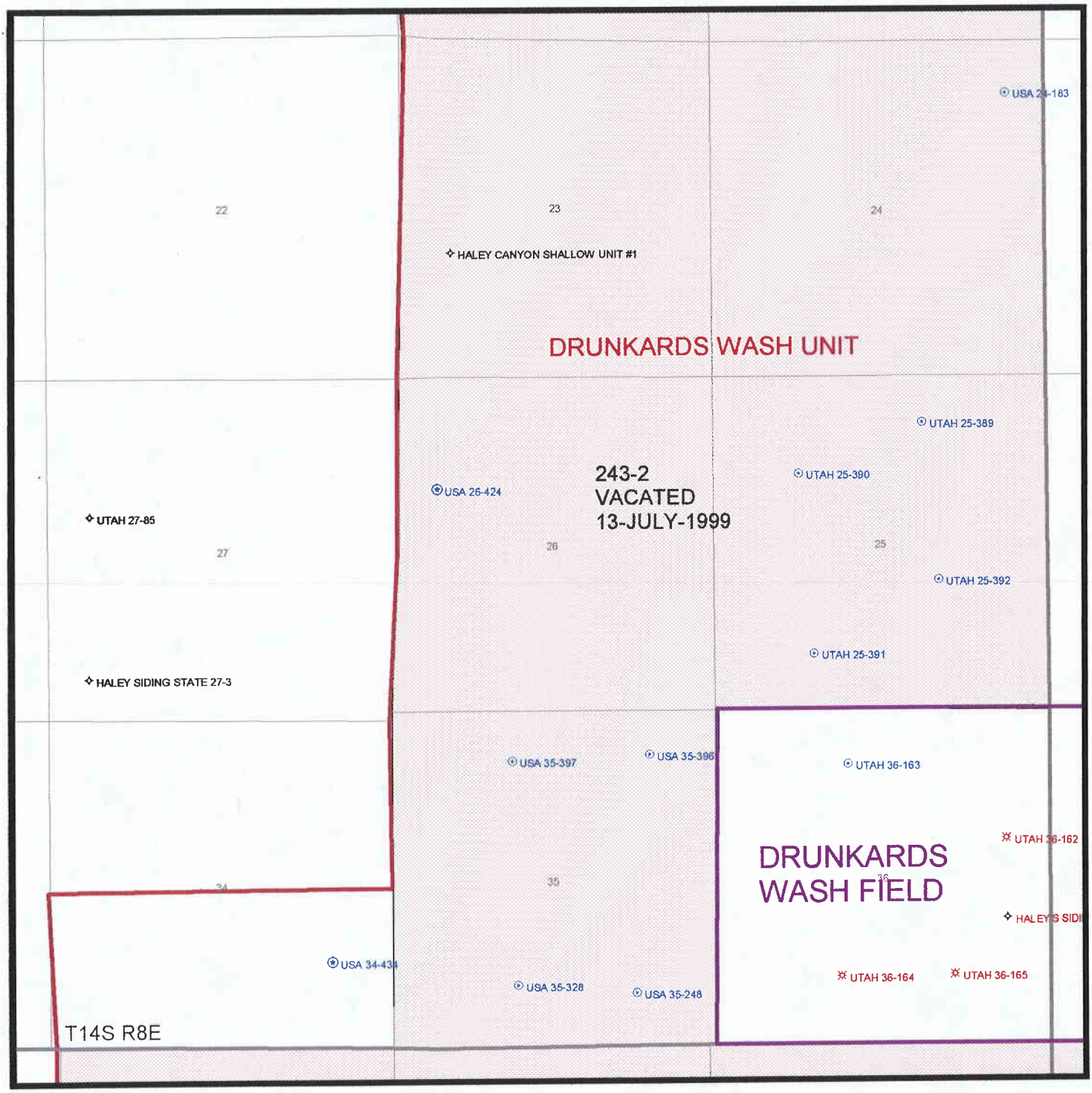

PREPARED
DATE: 30-SEP-1999

State of Utah
DEPARTMENT OF NATURAL RESOURCES
DIVISION OF OIL, GAS AND MINING

Michael O. Leavitt
Governor

Kathleen Clarke
Executive Director

Lowell P. Braxton
Division Director

1594 West North Temple, Suite 1210
PO Box 145801
Salt Lake City, Utah 84114-5801
801-538-5340
801-359-3940 (Fax)
801-538-7223 (TDD)

October 4, 1999

River Gas Corporation
1305 South 100 East
Price, Utah 84501

Re: USA 26-424 Well, 1757' FNL, 680' FWL, SW NW, Sec. 26, T. 14 S., R. 8 E., Carbon County, Utah

Gentlemen:

Pursuant to the provisions and requirements of Utah Code Ann. 40-6-1 et seq., Utah Administrative Code R649-3-1 et seq., and the attached Conditions of Approval, approval to drill the referenced well is granted.

This approval shall expire one year from the above date unless substantial and continuous operation is underway, or a request for extension is made prior to the expiration date. The API identification number assigned to this well is 43-007-30620.

Sincerely,

John R. Baza
Associate Director

lwp
Enclosures
cc: Carbon County Assessor
Bureau of Land Management, Moab District Office

Operator: River Gas Corporation

Well Name & Number: USA 26-424

API Number: 43-007-30620

Lease: Federal **Surface Owner:** Federal

Location: SW NW **Sec.** 26 **T.** 14 S. **R.** 8 E.

Conditions of Approval

1. General

   Compliance with the requirements of Utah Admin. R649-1 et seq., the Oil and Gas Conservation General Rules, and the applicable terms and provisions of the approved Application for Permit to Drill.

2. Notification Requirements

   Notify the Division within 24 hours of spudding the well. Contact Carol Daniels at (801)538-5284.

   Notify the Division prior to commencing operations to plug and abandon the well. Contact Dan Jarvis at (801) 538-5338 or Robert Krueger at (801) 538-5274.

3. Reporting Requirements

   All required reports, forms and submittals shall be promptly filed with the Division, including but not limited to the Entity Action Form (Form 6), Report of Water Encountered During Drilling (Form 7), Weekly Progress Reports for drilling and completion operations, and Sundry Notices and Reports on Wells requesting approval of change of plans or other operational actions.

4. State approval of this well does not supersede the required federal approval which must be obtained prior to drilling.

United States Department of the Interior

BUREAU OF LAND MANAGEMENT

Utah State Office
P.O. Box 45155
Salt Lake City, Utah 84145-0155

IN REPLY REFER TO:
3160
(UT-922)

<date>

RECEIVED
OCT 1 1999
DIV OF OIL, GAS & MINING

Memorandum

To: Assistant District Manager Minerals, Moab District

From: Michael Coulthard, Petroleum Engineer

Subject: 1999 Plan of Development Drunkards Wash Unit Carbon County, Utah.

Pursuant to email between Lisha Cordova, Division of Oil, Gas and Mining, and Mickey Coulthard, Utah State Office, Bureau of Land Management. The following wells are planned for calendar year 1999 within the Drunkards Wash Unit, Carbon County, Utah.

API #	WELL NAME	LOCATION
43-007-30606	UTAH 02-406	0768-FSL 0791-FEL 02 14S 09E
43-007-30607	UTAH 02-405	1462-FSL 1489-FWL 02 14S 09E
43-007-30608	UTAH 02-404	1077-FNL 1644-FWL 02 14S 09E
43-007-30609	UTAH 02-403	1478-FNL 1727-FEL 02 14S 09E
43-007-30617	USA 04-409	1345-FNL 1636-FWL 04 14S 09E
43-007-30619	USA 18-435	1868-FNL 0792-FWL 18 14S 09E
43-007-30620	USA 26-424	1757-FNL 0680-FWL 26 14S 08E
43-007-30621	USA 34-434	1342-FSL 0922-FEL 34 14S 08E

This office has no objection to permitting the well at this time.

/s/ Michael L. Coulthard

bcc: File - Drunkards Wash
Division of Oil Gas and Mining
Agr. Sec. Chron
Fluid Chron

FORM 9

STATE OF UTAH

DIVISION OF OIL, GAS AND MINING

SUNDRY NOTICES AND REPORTS ON WELLS

Do not use this form for proposals to drill new wells, deepen existing wells, or to reenter plugged and abandoned wells.
Use APPLICATION FOR PERMIT TO DRILL OR DEEPEN form for such proposals.

5. Lease Designation and Serial Number:

6. If Indian, Allottee or Tribe Name:

7. Unit Agreement Name:

8. Well Name and Number:

9. API Well Number:

10. Field or Pool, or Wildcat:

1. Type of Well: OIL ☐ GAS ☒ OTHER:

2. Name of Operator: River Gas Corporation

3. Address and Telephone Number: 6825 S. 5300 W. P.O. Box 851 Price, Utah 84501 (435) 613-9777

4. Location of Well
Footages:
QQ, Sec., T., R., M.: SLB & M
County: Carbon County
State: Utah

11. **CHECK APPROPRIATE BOXES TO INDICATE NATURE OF NOTICE, REPORT, OR OTHER DATA**

NOTICE OF INTENT
(Submit in Duplicate)

- ☐ Abandon
- ☐ Repair Casing
- ☐ Change of Plans
- ☐ Convert to Injection
- ☐ Fracture Treat or Acidize
- ☐ Multiple Completion
- ☐ New Construction
- ☐ Pull or Alter Casing
- ☐ Recomplete
- ☐ Reperforate
- ☐ Vent or Flare
- ☐ Water Shut-Off
- ☒ Other Change of Operator

Approximate date work will start _____

SUBSEQUENT REPORT
(Submit Original Form Only)

- ☐ Abandon *
- ☐ Repair Casing
- ☐ Change of Plans
- ☐ Convert to Injection
- ☐ Fracture Treat or Acidize
- ☐ Other _____
- ☐ New Construction
- ☐ Pull or Alter Casing
- ☐ Reperforate
- ☐ Vent or Flare
- ☐ Water Shut-Off

Date of work completion _____

Report results of Multiple Completions and Recompletions to different reservoirs on WELL COMPLETION OR RECOMPLETION REPORT AND LOG form.

* Must be accompanied by a cement verification report.

12. DESCRIBE PROPOSED OR COMPLETED OPERATIONS (Clearly state all pertinent details, and give pertinent dates. If well is directionally drilled, give subsurface locations and measured and true vertical depths for all markers and zones pertinent to this work.)

Please be advised that River Gas Corporation is transferring ownership of the attached list of wells to Phillips Petroleum Company 9780 Mt. Pyramid Court, Englewood, CO 80112.
Please direct all correspondence and reports to: Phillips Petroleum Company P.O. Box 3368, Englewood, CO 80155-3368.
Effective 1/1/01.

13.

Name & Signature: Cal Hurtt *Cal Hurtt* Title: Development Manager Date: 12/19/00

(This space for state use only)

(4/94) (See Instructions on Reverse Side)

LAW OFFICES
PRUITT, GUSHEE & BACHTELL
SUITE 1850 BENEFICIAL LIFE TOWER
SALT LAKE CITY, UTAH 84111-1495
(801) 531-8446
TELECOPIER (801) 531-8468
E-MAIL: mail@pgblaw.com

THOMAS W. BACHTELL
A. JOHN DAVIS, III
JOHN W. ANDERSON
FREDERICK M. MACDONALD
GEORGE S. YOUNG
ANGELA L. FRANKLIN
JOHN S. FLITTON
MICHAEL S. JOHNSON
WILLIAM E. WARD

SENIOR COUNSEL:
ROBERT G. PRUITT, JR.
OLIVER W. GUSHEE, JR.

OF COUNSEL:
ROBERT G. PRUITT, III
BRENT A. BOHMAN

January 29, 2001

HAND DELIVERED

Mr. Jim Thompson
Utah Division of Oil, Gas & Mining
1594 W. North Temple
Salt Lake City, UT 84116

Re: River Gas/Phillips Merger

Dear Mr. Thompson:

As you may know, River Gas Corporation ("RGC") merged into Phillips Petroleum Company ("Phillips") effective December 31, 2000 at 11:59 p.m. I have enclosed a Certificate of Articles of Merger issued by the Utah Department of Commerce and, although duplicative, a sundry notice formally evidencing the merger for your records, and a list of all wells, including injection wells, formerly operated by RGC.

Please change the Division's records to reflect the change in operator of these wells from RGC to Phillips. All operational questions should be directed to Phillips at the following address:

Phillips Petroleum Company
Attn: Billy Stacy, Operations Manager
P.O. Box 3368
Englewood, CO 80155-3368
Telephone No.: (720) 344-4984

Phillips currently has a bond on file with the Division (a copy of which is enclosed for your reference), but I understand an $80,000 Letter of Credit is in the process of being substituted.

On behalf of Phillips, I thank you for your cooperation. Should you have any further questions or concerns, please do not hesitate to contact me.

Yours very truly,

Frederick M. MacDonald

FMM:cs
2078.16
Enclosures
cc: W. H. Rainbolt
Billy Stacy

Utah Department of Commerce
Division of Corporations & Commercial Code
160 East 300 South, 2nd Floor, Box 146705
Salt Lake City, UT 84114-6705
Phone: (801) 530-4849
Toll Free: (877) 526-3994 Utah Residents
Fax: (801) 530-6438
Web site: http://www.commerce.state.ut.us

Registration Number: 562960-0143
Business Name: PHILLIPS PETROLEUM COMPANY
Registered Date: JUNE 14, 1946

01/12/01

CERTIFICATE OF ARTICLES OF MERGER

THE UTAH DIVISION OF CORPORATIONS AND COMMERCIAL CODE ("DIVISION") HEREBY CERTIFIES THAT

ARTICLES OF MERGER WERE FILED WITH THIS OFFICE ON DECEMBER 12, 2000 MERGING RIVER GAS CORPORATION, A CORPORATION OF THE STATE OF ALABAMA, INTO PHILLIPS PETROLEUM COMPANY, THE SURVIVING CORPORATION WHICH IS OF THE STATE OF DELAWARE, AS APPEARS OF RECORD IN THE OFFICE OF THE DIVISION.

Ric Campbell
Acting Division Director of
Corporations and Commercial Code

GRN JOURNAL
00171151

State of Delaware

Office of the Secretary of State

Date: 12/13/2000
Receipt Number: 188532
Amount Paid: $145.00

I, EDWARD J. FREEL, SECRETARY OF STATE OF THE STATE OF DELAWARE, DO HEREBY CERTIFY THE ATTACHED IS A TRUE AND CORRECT COPY OF THE CERTIFICATE OF OWNERSHIP, WHICH MERGES:

"RIVER GAS CORPORATION", A ALABAMA CORPORATION,

WITH AND INTO "PHILLIPS PETROLEUM COMPANY" UNDER THE NAME OF "PHILLIPS PETROLEUM COMPANY", A CORPORATION ORGANIZED AND EXISTING UNDER THE LAWS OF THE STATE OF DELAWARE, AS RECEIVED AND FILED IN THIS OFFICE THE SIXTH DAY OF DECEMBER, A.D. 2000, AT 10 O'CLOCK A.M.

AND I DO HEREBY FURTHER CERTIFY THAT THE EFFECTIVE DATE OF THE AFORESAID CERTIFICATE OF OWNERSHIP IS THE THIRTY-FIRST DAY OF DECEMBER, A.D. 2000, AT 11:59 O'CLOCK A.M.

A FILED COPY OF THIS CERTIFICATE HAS BEEN FORWARDED TO THE NEW CASTLE COUNTY RECORDER OF DEEDS.

12-12-00P04:02 RCVD

State of Utah
Department of Commerce
Division of Corporations and Commercial Code
I Hereby certify that the foregoing has been filed and approved on this 12 day of Dec 20 00 in the office of this Division and hereby issue this Certificate thereof.

Examiner _____ Date 12/28/00

RIC CAMPBELL
ACTING DIRECTOR

TAP
FILED
DEC 12 2000
Utah Div. Of Corp. & Comm. Code

Edward J. Freel, Secretary of State

0064324 8100M

AUTHENTICATION: 0837738

001609453

DATE: 12-07-00

STATE OF DELAWARE
SECRETARY OF STATE
DIVISION OF CORPORATIONS
FILED 10:00 AM 12/06/2000
001609453 - 0064324

CERTIFICATE OF OWNERSHIP AND MERGER

OF

RIVER GAS CORPORATION

(an Alabama corporation)

into

Phillips Petroleum Company

(a Delaware corporation)

It is hereby certified that:

1. Phillips Petroleum Company [hereinafter sometimes referred to as the "Corporation"] is a business corporation of the State of Delaware.

2. The Corporation is the owner of all of the outstanding shares of each class of stock of River Gas Corporation, which is a business corporation of the State of Alabama.

3. The laws of the jurisdiction of organization of River Gas Corporation permit the merger of a business corporation of that jurisdiction with a business corporation of another jurisdiction.

4. The Corporation hereby merges River Gas Corporation into the Corporation.

5. The following is a copy of the resolutions adopted on November 21, 2000 by the Board of Directors of the Corporation to merge the said River Gas Corporation into the Corporation:

> "1. Phillips Petroleum Company, which is a business corporation of the State of Delaware and is the owner of all of the outstanding shares of River Gas Corporation, which is a business corporation of the State of Alabama, hereby merges River Gas Corporation into Phillips Petroleum Company pursuant to the provisions of the Alabama Business Corporation Act and pursuant to the

12-12-00P04:02 RCVD

provisions of Section 253 of the General Corporation Law of Delaware.

"2. The separate existence of River Gas Corporation shall cease at the effective time and date of the merger pursuant to the provisions of the Alabama Business Corporation Act; and Phillips Petroleum Company shall continue its existence as the surviving corporation pursuant to the provisions of Section 253 of the General Corporation Law of Delaware.

"3. The Articles of Incorporation of Phillips Petroleum Company are not amended in any respect by this Plan of Merger.

"4. The issued shares of River Gas Corporation shall not be converted or exchanged in any manner, but each said share which is issued immediately prior to the effective time and date of the merger shall be surrendered and extinguished.

"5. Each share of Phillips Petroleum Company outstanding immediately prior to the effective time and date of the merger is to be an identical outstanding share of Phillips Petroleum Company at the effective time and date of the merger.

"6. No shares of Phillips Petroleum Company and no shares, securities, or obligations convertible into such shares are to be issued or delivered under this Plan of Merger.

"7. The Board of Directors and the proper officers of Phillips Petroleum Company are hereby authorized, empowered, and directed to do any and all acts and things, and to make, execute, deliver, file, and/or record any and all instruments, papers, and documents which shall be or become necessary, proper, or convenient to carry out or put into effect any of the provisions of this Plan of Merger or of the merger herein provided for. "

" This Company approves that the effective time and date of the merger herein provided for in the State of Alabama shall be 11:59 p.m. on December 31, 2000."

"Any Vice President, the Treasurer, any Assistant Treasurer, the Secretary, any Assistant Secretary, and each of them severally, be and hereby is authorized to make, execute,

deliver, file, and/or record any and all instruments, papers, and documents which shall be or become necessary, proper, or convenient to carry out or put into effect any of the provisions of these resolutions and to do or cause to be done all such acts as are necessary to give effect to the purpose and intent of the approval herein set forth."

6. This Certificate of Ownership and Merger shall be effective at 11:59 p.m. on December 31, 2000.

Executed on November 27, 2000

Phillips Petroleum Company

N. A. Loftis

N. A. Loftis, Assistant Secretary

United States Department of the Interior

BUREAU OF LAND MANAGEMENT
Utah State Office
P.O. Box 45155
Salt Lake City, UT 84145-0155

In Reply Refer To:
3106
UTU-47157 et al
(UT-932)

JAN 30 2001

NOTICE

Phillips Petroleum Company Attn: W. H. Rainbolt, Rocky Mtn. Region-Land Box 1967 Houston, TX 77251-1967	:	Oil and Gas

Merger Recognized

Acceptable evidence has been filed in this office concerning the merger of River Gas Corporation into Phillips Petroleum Company with Phillips Petroleum Company being the surviving entity.

The oil and gas lease files and rights-of-way files identified on the enclosed exhibit have been noted as to the merger. The exhibit is the list supplied by the representative of the companies, and verified by our computerized records. We have not adjudicated the case files to determine if the entity affected by the merger holds an interest in the leases identified, nor have we attempted to identify leases where the entity is the operator on the ground, maintaining no vested record title or operating rights interest. We are notifying the Minerals Management Service and all applicable BLM offices of the merger by a copy of this notice. If additional documentation for a change of operator is required by our Field Offices, you will be contacted by them.

By recognition of the merger the obligor is automatically changed by operation of law from River Gas Corporation to Phillips Petroleum Company on Letter of Credit No. P-207337 (BLM Bond No. UT0829). A rider to BLM Bond No. ES0048 assuming any and all liabilities of BLM Bond No. UT0829 must be submitted for approval to the Eastern States Office, Attn: Bill Forbes, 7450 Boston Boulevard, Springfield, VA 22153. After the rider is approved, the Letter of Credit will be returned to the financial institution that issued it.

ROBERT LOPEZ

Robert Lopez
Chief, Branch of
Minerals Adjudication

Enclosure
Exhibit of Leases

RECEIVED
FEB 02 2001
DIVISION OF
OIL, GAS AND MINING

cc: Moab Field Office
Vernal Field Office
Price Field Office
MMS–Reference Data Branch, MS 3130, P.O. Box 5860, Denver, CO 80217
State of Utah, DOGM, Attn: Jim Thompson (Ste. 1210), Box 145801, SLC, UT 84114
The Chase Manhattan Bank, Attn: Standby Letter of Credit Dept., 4 Chase Metrotech Center, 8th Floor Brooklyn, NY 11245
Teresa Thompson (UT-931)
LaVerne Steah (UT-942)
Pruitt, Gushee & Bachtell, Attn: Frederick M. MacDonald, Suite 1850 Beneficial Life Tower, Salt Lake City, Utah 84111-1495
BLM, Eastern States Office (Attn: Bill Forbes)

RGC/Phillips Merger

List of Affected BLM Leases and Rights-of-Way

A. Oil & Gas Leases

UTU-47157	UTU-70219	UTU-75016
UTU-49631	UTU-70400	UTU-75019
UTU-50645	UTU-71390	UTU-75021
UTU-51584	UTU-72003	UTU-75022
UTU-53872	UTU-72004	UTU-76332
UTU-57821	UTU-72350	UTU-76334
UTU-60402	UTU-72355	UTU-77351
UTU-60925	UTU-72358	UTU-77353
UTU-61154	UTU-72377	UTU-77354
UTU-61155	UTU-72470	UTU-78408
UTU-61158	UTU-72477	UTU-78409
UTU-61547	UTU-72624	UTU-78410
UTU-61548	UTU-72723	UTU-78411
UTU-62145	UTU-72724	UTU-78412
UTU-62276	UTU-72746	UTU-78413
UTU-65298	UTU-73004	UTU-78782
UTU-65300	UTU-73075	UTU-78783
UTU-65302	UTU-73330	UTU-79150
UTU-65303	UTU-73331	UTU-79151
UTU-67621	UTU-73523	UTU-79152
UTU-67839	UTU-73752	UTU-79153
UTU-67906	UTU-73884	UTU-79154
UTU-68314	UTU-74376	UTU-79155
UTU-69449	UTU-75015	UTU-79159

B. Rights-of-Way

UTU-73226	UTU-77141	UTU-77976
UTU-74319	UTU-77141-01	UTU-77989
UTU-74320	UTU-77151	UTU-77989-01
UTU-76610	UTU-77151-01	
UTU-76629	UTU-77154	

Division of Oil, Gas and Mining

OPERATOR CHANGE WORKSHEET

ROUTING

1. GLH		4-KAS ✓
2. CDW ✓		5-~~JRB~~ ✓
3. JLT		6-FILE

Enter date after each listed item is completed

Change of Operator (Well Sold) — Designation of Agent

Operator Name Change (Only) — **X Merger**

The operator of the well(s) listed below has changed, effective: **12-31-2000**

FROM: (Old Operator):	**TO:** (New Operator):
RIVER GAS CORPORATION	PHILLIPS PETROLEUM COMPANY
Address: 6825 S. 5300 W. P. O. BOX 851	Address: P. O. BOX 3368
PRICE, UT 84501	ENGLEWOOD, CO 80155-3368
Phone: 1-(435)-613-9777	Phone: 1-(720)-344-4984
Account N1605	Account N1475

CA No. **Unit:** **DRUNKARDS WASH**

WELL(S)

NAME	API NO.	ENTITY NO.	SEC. TWN RNG	LEASE TYPE	WELL TYPE	WELL STATUS
USA 26-424	43-007-30620	99999	26-14S-08E	FEDERAL	GW	APD
USA 01-402	43-007-30629	99999	01-14S-09E	FEDERAL	GW	APD
USA 03-407	43-007-30627	99999	03-14S-09E	FEDERAL	GW	APD
USA 03-414	43-007-30628	99999	03-14S-09E	FEDERAL	GW	APD
USA 04-469	43-007-30504	99999	04-14S-09E	FEDERAL	GW	APD
USA 04-409	43-007-30617	99999	04-14S-09E	FEDERAL	GW	APD
USA 05-410	43-007-30632	99999	05-14S-09E	FEDERAL	GW	APD
USA 05-411	43-007-30633	99999	05-14S-09E	FEDERAL	GW	APD
USA 15-177	43-007-30423	99999	15-14S-09E	FEDERAL	GW	APD
USA 17-179	43-007-30422	99999	17-14S-09E	FEDERAL	GW	APD
USA 18-181	43-007-30618	99999	18-14S-09E	FEDERAL	GW	APD
USA 21-184	43-007-30424	99999	21-14S-09E	FEDERAL	GW	APD
USA 21-35	43-007-30425	99999	21-14S-09E	FEDERAL	GW	APD
USA 22-185	43-007-30426	99999	22-14S-09E	FEDERAL	GW	APD
USA 22-186	43-007-30477	99999	22-14S-09E	FEDERAL	GW	APD
USA 03-249	43-007-30715	99999	03-15S-08E	FEDERAL	GW	APD
USA 09-452	43-007-30711	99999	09-15S-08E	FEDERAL	GW	APD
USA 10-250	43-007-30461	99999	10-15S-08E	FEDERAL	GW	APD
USA 11-441	43-007-30649	99999	11-15S-08E	FEDERAL	GW	APD
USA 15-421	43-007-30676	99999	15-15S-08E	FEDERAL	GW	APD

OPERATOR CHANGES DOCUMENTATION

1. (R649-8-10) Sundry or legal documentation was received from the **FORMER** operator on: 01/29/2001
2. (R649-8-10) Sundry or legal documentation was received from the **NEW** operator on: 01/29/2001
3. The new company has been checked through the **Department of Commerce, Division of Corporations Database on:** 02/15/2001

4. Is the new operator registered in the State of Utah: YES Business Number: 562960-0143

5. If **NO**, the operator was contacted contacted on: _____

6. **Federal and Indian Lease Wells:** The BLM and or the BIA has approved the (merger, name change, or operator change for all wells listed on Federal or Indian leases on: 01/30/2001

7. **Federal and Indian Units:** The BLM or BIA has approved the successor of unit operator for wells listed on: N/A

8. **Federal and Indian Communization Agreements ("CA"):** The BLM or the BIA has approved the operator change for all wells listed involved in a CA on: N/A

9. **Underground Injection Control ("UIC") Pro** The Division has approved UIC Form 5, **Transfer of Authority to Inject,** for the enhanced/secondary recovery unit/project for the water disposal well(s) listed on: N/A

DATA ENTRY:

1. Changes entered in the **Oil and Gas Database on:** 02/15/2001

2. Changes have been entered on the **Monthly Operator Change Spread Sheet on:** 02/15/2001

3. Bond information entered in RBDMS on: N/A

4. Fee wells attached to bond in RBDMS on: N/A

STATE BOND VERIFICATION:

1. State well(s) covered by Bond No.: N/A

FEE WELLS - BOND VERIFICATION/LEASE INTEREST OWNER NOTIFICATION:

1. (R649-3-1) The **NEW** operator of any fee well(s) listed has furnished a bond: N/A

2. The **FORMER** operator has requested a release of liability from their bond on: N/A
   The Division sent response by letter on: N/A

3. (R649-2-10) The **FORMER** operator of the Fee wells has been contacted and informed by a letter from the Division of their responsibility to notify all interest owners of this change on: N/A

FILMING:

1. All attachments to this form have been **MICROFILMED** on: 2-21-01

FILING:

1. **ORIGINALS/COPIES** of all attachments pertaining to each individual well have been filled in each well file on: _____

COMMENTS:

Form 3160-3
(December 1990)

SUBMIT IN TRIPLICATE*
(Other instructions on reverse side)

Form approved.
Budget Bureau No. 1004-0136
Expires: December 31, 1991

UNITED STATES
DEPARTMENT OF THE INTERIOR
BUREAU OF LAND MANAGEMENT

APPLICATION FOR PERMIT TO DRILL OR DEEPEN

5. LEASE DESIGNATION AND SERIAL NO.: U-61154

6. IF INDIAN, ALLOTTEE OR TRIBE NAME: N/A

7. UNIT AGREEMENT NAME: Drunkards Wash

8. FARM OR LEASE NAME, WELL NO.: USA 26-424

9. API WELL NO.: 43-007-30620

10. FIELD AND POOL, OR WILDCAT: Drunkards Wash

11. SEC., T., R., M., OR BLK. AND SURVEY OR AREA: SW/4, NW/4, Sec.26, T14S, R8E, SLB&M

1a. TYPE OF WORK: DRILL [X] DEEPEN [ ]

b. TYPE OF WELL: OIL WELL [ ] GAS WELL [X] OTHER — SINGLE ZONE [X] MULTIPLE ZONE [ ]

2. NAME OF OPERATOR: ~~RIVER GAS CORPORATION~~ Phillips Petroleum Company

3. ADDRESS AND TELEPHONE NO.: 1305 So. 100 E. Price, Utah 84501 (435) 637-8876

4. LOCATION OF WELL (Report location clearly and in accordance with any State requirements.*)
At surface: 1757' FNL, 680' FWL
At proposed prod. zone:

14. DISTANCE IN MILES AND DIRECTION FROM NEAREST TOWN OR POST OFFICE*: 10.25 miles west of Price, Utah.

12. COUNTY OR PARISH: Carbon

13. STATE: Utah

15. DISTANCE FROM PROPOSED* LOCATION TO NEAREST PROPERTY OR LEASE LINE, FT. (Also to nearest drig. unit line, if any): 680'

16. NO. OF ACRES IN LEASE: 4909.79 Acres

17. NO. OF ACRES ASSIGNED TO THIS WELL: 160 acres

18. DISTANCE FROM PROPOSED LOCATION TO NEAREST WELL, DRILLING, COMPLETED, OR APPLIED FOR, ON THIS LEASE, FT.: 3150'

19. PROPOSED DEPTH: 3900'

20. ROTARY OR CABLE TOOLS: Rotary

21. ELEVATIONS (Show whether DF, RT, GR, etc.): 7004.2' GR

22. APPROX. DATE WORK WILL START*: May 2001

23. PROPOSED CASING AND CEMENTING PROGRAM

SIZE OF HOLE	GRADE, SIZE OF CASING	WEIGHT PER FOOT	SETTING DEPTH	QUANTITY OF CEMENT
15"	12-3/4"	Conductor	40'	
11"	J-55 8-5/8"	24 #/ft	350'	135 sks G+2% CaCl + 1/4# per sack flocel
7-7/8"	N-80 5-1/2"	17 #/ft	~~2880~~' 3890'	360 sks 50/50 POZ +8%gel+2%CaCl+10%extender. 90 sks "G" thixotropic

RECEIVED
BLM FIELD OFFICE
1999 SEP 20 P 2:29
DEPT OF THE INTERIOR
BUREAU OF LAND MGMT

RECEIVED
MAY 2 1 2001
DIVISION OF
OIL, GAS AND MINING

FLARING OR VENTING OF GAS IS SUBJECT TO NTL 4-A Dated 1/1/80

CONDITIONS OF APPROVAL ATTACHED

IN ABOVE SPACE DESCRIBE PROPOSED PROGRAM: If proposal is to deepen, give data present productive zone and proposed new productive zone. If proposal is to drill or deepen directionally, give pertinent data on subsurface locations and measured and true vertical depths. Give blowout preventer program, if any.

24.

SIGNED Cal Hurtt TITLE Development Manager DATE 9/16/99

(This space for Federal or State office use)

PERMIT NO. _____ APPROVAL DATE _____

Application approval does not warrant or certify that the applicant holds legal or equitable title to those rights in the subject lease which would entitle the applicant to conduct operations thereon.
CONDITIONS OF APPROVAL, IF ANY:

APPROVED BY /S/ WILLIAM C. STRINGER TITLE Assistant Field Manager, Division of Resources DATE MAY 1 7 2001

***See Instructions On Reverse Side**

Title 18 U.S.C. Section 1001, makes it a crime for any person knowingly and willfully to make to any department or agency or the United States any false, fictitious or fraudulent statements or representations as to any matter within its jurisdiction.

Range 8 East

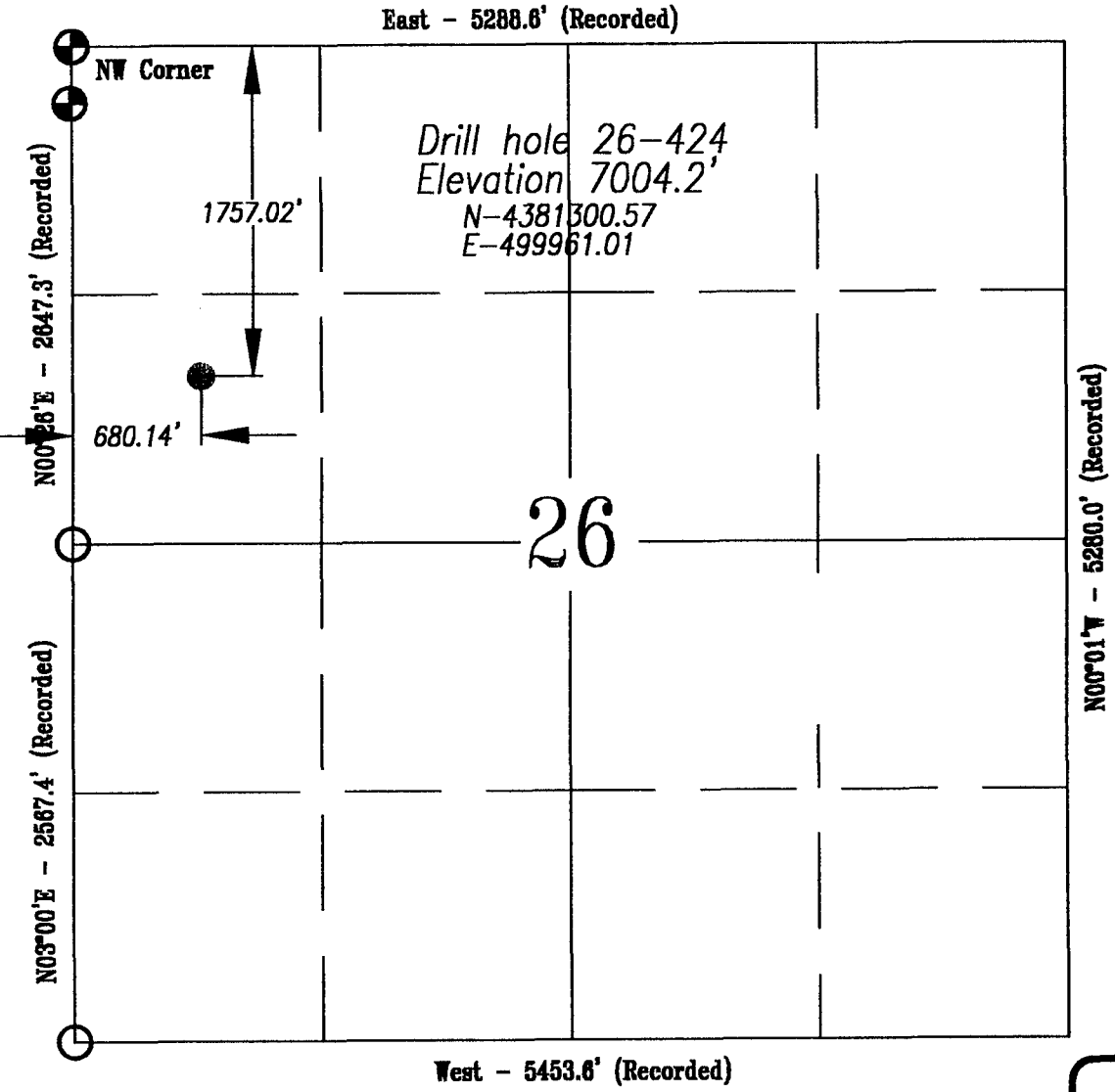

Township 14 South

Location

The Bearings Indicated are per the recorded plat obtained from the U.S. Land Office. The well location was determined using a Trimble 4400 GPS Unit.

Basis Of Elevation:

Basis of Elevation of 7014' as indicated on the NE Corner of Section 27, Township 14 South, Range 8 East, Salt Lake Base and Meridian, as indicated on the Wattis Quadrangle 7.5 Minute Series Map.

Description of Location:

Proposed Drill Hole located in the SW 1/4, NW 1/4 of Section 26; being 1757.02' South and 680.146' East from the NW Corner of Section 26, T14S, R8E, Salt Lake Base & Meridian.

Surveyor's Certificate:

I, John S. Huefner, a Registered Licensed Land Surveyor, holding Certificate #144842, State of Utah, do hereby certify that the information on this drawing is a true and accurate survey of the land, and was conducted under my personal supervision, as shown hereon.

Registered Professional Engineer
No. 144842
John S. Huefner
State of Utah
9.9.99
Registered Land Surveyor

LEGEND:

- Drill Hole Location
- Found Section Corner Monumented w/ Brass Cap unless noted otherwise
- Brass Cap (Searched, Not Found)

SCALE:

250' 0' 500' 1000'

DRAWN BY: P. BOYLEN	Castle Valley 3236 South 125 West Price, Utah 84501 (801) 637-2300 FAX (801) 637-2533
CHECKED BY: J.S.H.	
DATE: 9/3/99	
SCALE: 1"=1000'	
JOB NO. 534	Surveyors
DRAWING NO. A-1	River Gas Corporation Well# 26-424 Section 26, T14S, R8E, S.L.B.&M. Carbon County, Utah
SHEET 1 OF 4	

Phillips Petroleum Company
USA 26-424
Lease U-61154
Drunkards Wash Unit
SW/NW Section 26, T14S, R8E
Carbon County, Utah

A COMPLETE COPY OF THIS PERMIT SHALL BE KEPT ON LOCATION from the beginning of site construction through well completion, and shall be available to contractors to ensure compliance.

CONDITIONS OF APPROVAL

Approval of this application does not warrant or certify that the applicant holds legal or equitable title to those rights in the subject lease which would entitle the applicant to conduct operations thereon.

Be advised that Phillips Petroleum Company is considered to be the operator of the above well and is responsible under the terms and conditions of the lease for the operations conducted on the leased lands.

Bond coverage for this well is provided by ES 0048 (Principal - Phillips Petroleum Company) via surety consent as provided for in 43 CFR § 3104.2.

This office will hold the aforementioned operator and bond liable until the provisions of 43 CFR § 3106.7-2 continuing responsibility are met.

This permit will be valid for a period of one year from the date of approval. After permit termination, a new application must be filed for approval.

All lease operations will be conducted in full compliance with applicable regulations (43 CFR § 3100), Onshore Oil and Gas Orders, lease terms, notices to lessees, and the approved plan of operations. The operator is fully responsible for the actions of his subcontractors.

A. DRILLING PROGRAM

1. The proposed BOPE is in a 2M configuration, and is adequate for this depth in this area. Installation, testing and operation of the system shall be in conformance with Onshore Oil and Gas Order No. 2.

2. The requirements for air drilling, found in Onshore Oil and Gas Order No. 2, part III, E (Special Drilling Operations), shall be followed. This section requires, at a minimum, the use of the following equipment not mentioned in the application:

   - Spark arresters
   - Blooie line discharge 100 feet from wellbore
   - Straight blooie line
   - Deduster equipment
   - Float valve above bit
   - Automatic igniter on the blooie line

3. Materials to counteract a gas kick shall be available on location.

4. As proposed, both casing strings shall be cemented back to surface. If cement behind the production (5½") casing does not circulate to surface, a Cement Bond Log or other appropriate tool shall be run to determine the depth to the top-of-cement.

5. Concurrent approval from the State of Utah, Division of Oil, Gas & Mining is required before conducting any surface disturbing activities.

B. SURFACE USE

1. The following appendices are attached for your reference. They are to be followed as conditions of approval:

   SM-1, Seed Mixture for Green Strip Areas
   SM-2, Seed Mixture for Final Reclamation
   BG-1, Surface Disturbance Mitigation for Critical Winter Range
   BG-2, Critical Winter Range Browse Hand Planting
   BG-3, Winter Restrictions on High Value and Critical Winter Range

2. Whether the mud pit shall be lined will be determined at the time of construction.

3. Within six months of installation, surface structures shall be painted in the following flat, earth tone color: Olive Black (5WA20-6). This Fuller O'Brien color is for reference only. Any brand of paint may be used provided the colors match. Any facilities that must be painted to comply with OSHA standards are exempt.

4. Phillips shall install a new cattleguard and gate located in the Haley Canyon/Long Bench allotment boundary fence at T. 14 S., R. 8 E., sec 27 and 26 located on the section line . The cattleguard shall be of sufficient rating to support the heavy equipment traffic used in the natural gas program. BLM standard for this purpose shall be a H-20 grade cattleguard. BLM Manual 9000 provides for ratings and specifications of cattleguards. The associated gate shall be closed after each passage of equipment and/or personnel during the livestock season of use (May 01 thru October 31).

GENERAL CONSTRUCTION

1. Operator shall contact the Price BLM Office at least forty-eight hours prior to the anticipated start of construction and/or any surface disturbing activities. The BLM may require and schedule a preconstruction conference with the operator prior to the operator commencing construction and/or surface disturbing activities. The operator and the operator's contractor, or agents involved with construction and/or any surface disturbing activities associated with the project, shall attend this conference to review the Conditions of Approval and plan of development. The operator's inspector will be designated at the pre-drill conference, and is to be given an approved copy of all maps, permits and conditions of approval before the start of construction. The BLM will also designate a representative for the project at the preconstruction conference.

2. The operator shall designate a representative(s) who shall have the authority to act upon and to implement instructions from the BLM. The operator's representative shall be available for communication with the BLM within a reasonable time when construction or other surface disturbing activities are underway.

3. Any cultural and/or paleontological resource (historic or prehistoric site or object) discovered by the operator, or any person working on his behalf, on public land is to be immediately reported to the Price BLM Office. The operator will suspend all operations in the immediate area of such discovery until written authorization to proceed is issued by the Price BLM Office. An evaluation of the discovery will be made by the BLM to determine appropriate actions to prevent the loss of significant cultural or scientific values. The operator is responsible for the cost of evaluation of any site found during construction. The BLM will determine what mitigation is necessary.

4. During project construction, surface disturbance and vehicle travel shall be limited to the approved location and access routes. Any additional area needed must be approved by the Price BLM Office prior to use.

5. The operator must provide a trash cage for the collection and containment of all trash. The trash shall be disposed in an authorized landfill. The location and access roads shall be kept litter free.

6. Vegetation removal necessitated by construction shall be confined to the limits of actual construction. Removed vegetation will be stockpiled for use in reclamation or removed from the construction site at the direction of the BLM.

7. Prior to surface disturbance, topsoil is to be separately removed and segregated from other material. Topsoil depth will be decided onsite by BLM. If the topsoil is less than 6 inches, a 6-inch layer that includes the A horizon and the unconsolidated material immediately below the A horizon shall be removed and the mixture segregated and redistributed as the surface soil layer.

   Generally topsoil shall be stored within the pad site or adjacent to access roads. The company in consultation with BLM shall determine stockpile locations and dimensions at the onsite. If the topsoil stockpiles will not be redistributed for a period in excess of one (1) year, the stockpiles are to be seeded with seed mixture SM-2 (attached).

ROAD and PIPELINE CONSTRUCTION

8. Operator shall provide an inspector under the direction of a registered professional engineer (PE) at all times during road construction. A PE shall certify (statement with PE stamp) that the road was constructed to the required Bureau of Land Management (BLM) road standards.

9. Road construction or routine maintenance activities are to be performed during periods when the soil can adequately support construction equipment. If such equipment creates ruts more than 6 inches deep, the soil is deemed too wet to adequately support construction equipment.

10. The operator is responsible for maintenance of all roads authorized through the lease or a right-of-way. Construction and maintenance shall comply with Class II or III Road Standards as described in BLM Manual Section 9113 and the Moab District Road Standards, except as modified by BLM. Maintenance may include but is not limited to grading, applying gravel, snow removal, ditch cleaning, headcut restoration/prevention.

11. Topsoil from access roads and pipelines is to be wind rowed along the uphill side of the road or stored in an approved manner. When the road and pipeline is rehabilitated, this soil will then be used as a top coating for the seed bed.

12. Erosion-control structures such as water bars, diversion channels, and terraces will be constructed to divert water and reduce soil erosion on the disturbed area. Road ditch turnouts shall be equipped with energy dissipators as needed to avoid erosion. Where roads interrupt overland sheet-flow and convert this runoff to channel flow, ditch turnouts shall be designed to reconvert channel flow to sheet flow. Rock energy dissipators and gravel dispersion fans may be used, or any other design which would accomplish the desired reconversion of flow regime. As necessary cut banks, road drainages, and road crossings shall be armored or otherwise engineered to prevent headcutting.

PAD CONSTRUCTION

13. During the construction of the drill pad, suitable topsoil material is to be stripped and conserved in a stockpile on the pad. If stockpiles are to remain for more than a year, they shall be seeded with the seed mixture in appendix SM-2, attached.

14. Generally, drill pads are to be designed to prevent overland flow of water from entering or leaving the site. The pad is to be sloped to drain spills and water into the reserve pit. The drill pad shall be designed to disperse diverted overland flow and to regulate flow velocity so as to prevent or minimize erosion. Well pad diversion outlets shall be equipped with rock energy brakes and gravel-bedded dispersion fans.

REHABILITATION PROCEDURES

Site Preparation

15. The entire roadbed should be obliterated and brought back to the approximate original contour. Drainage control is to be reestablished as necessary. All areas affected by road construction are to be recontoured to blend in with the existing topography. All berms are to be removed unless determined to be beneficial by BLM. In recontouring the disturbed areas, care should be taken to not disturb additional vegetation.

Seedbed Preparation

16. An adequate seedbed should be prepared for all sites to be seeded. Areas to be revegetated should be chiseled or disked to a depth of at least 12 inches unless restrained by bedrock.

17. Ripping of fill materials should be completed by a bulldozer equipped with single or a twin set of ripper shanks. Ripping should be done on 4-foot centers to a depth of 12 inches. The process should be repeated until the compacted area is loose and friable, then shall be followed by final grading. Seedbed preparation will be considered complete when the soil surface is completely roughened and the number of rocks (if present) on the site is sufficient to cause the site to match the surrounding terrain.

18. After final grading, the stockpiled topsoil shall be spread evenly across the disturbed area.

Fertilization

19. Commercial fertilizer with a formula of 16-16-8 is to be applied at a rate of 200 pounds per acre to the site. The rate may be adjusted depending on soil.

20. Fertilizer is to be applied not more than 48 hours before seeding, and shall be cultivated into the upper 3 inches of soil.

21. Fertilizer is to be broadcast over the soil using hand-operated "cyclone-type" seeders or rotary broadcast equipment attached to construction or revegetation machinery as appropriate to slope. All equipment should be equipped with a metering device. Fertilizer application is to take place before the final seeding preparation treatment. Fertilizer broadcasting operations should not be conducted when wind velocities would interfere with even distribution of the material.

Mulching

22. When it is time to reclaim this location, the Price BLM Office will determine whether it will be necessary to use mulch in the reclamation process. The type of mulch should meet the following requirements: Wood cellulose fiber shall be natural or cooked, shall disperse readily in water, and shall be nontoxic. Mulch shall be thermally produced and air dried. The homogeneous slurry or mixture shall be capable of application with power spray equipment. A colored dye that is noninjurious to plant growth may be used when specified. Wood cellulose fiber is to be packaged in new, labeled containers. A minimum application of 1500 pounds per acre shall be applied. A suitable tackifier shall be applied with the mulch at a rate of 60 to 80 pounds per acre.

    An alternative method of mulching on small sites would be the application of straw or hay mulch at a rate of 2000 pounds per acre. Hay or straw shall be certified weed free. Following the application of straw or hay, crimping shall occur to ensure retention.

Reseeding

23. All disturbed areas are to be seeded with the seed mixture required by the BLM. The seed mixture(s) shall be planted in the fall of the year (Sept-Nov), in the amounts specified in pounds of pure live seed (PLS)/acre. There shall be no noxious weed seed in the seed mixture. Seed will be tested and the viability testing of seed shall be done in accordance with State law(s) and within 12 months prior to planting. Commercial seed will be either certified or registered seed. The seed mixture container shall be tagged in accordance with State law(s) and available for inspection by the BLM. Seed is to be planted using a drill equipped with a depth regulator to ensure proper depth of planting where drilling is possible. The seed mixture shall be evenly and uniformly planted over the disturbed area. (Smaller/heavier seeds tend to drop to the bottom of the drill and are planted first. Appropriate measures should be taken to ensure this does not occur.) Where drilling is not possible, seed is to be broadcast and the area raked or chained to cover the seed. Woody species with seeds that are too large for the drill will be broadcast. When broadcasting the seed, the pounds per acre noted below are to be increased by 50 percent. Reseeding may be required if a satisfactory stand is not established to the surface rights owner's specifications. Evaluation of the seeding's success will not be made before completion of the second growing season after the vegetation becomes established. The Price BLM Office is to be notified a minimum of seven days before seeding a project.

24. The disturbed areas for the road and pipeline must be seeded in the fall of the year,

immediately after the topsoil is replaced. The prescribed seed mixture is attached as appendix SM-2.

General

25. Prior to the use of insecticides, herbicides, fungicides, rodenticides and other similar substances, the operator must obtain from BLM, approval of a written plan. The plan must describe the type and quantity of material to be used, the pest to be controlled, the method of application, the location for storage and disposal of containers, and other information that BLM may require. A pesticide may be used only in accordance with its registered uses and within other agency limitations. Pesticides must not be permanently stored on public lands.

SM-1

Green Strip Areas

The following seed mixture will be planted along service road borrow ditches, around the edge of drill pads with a production well, and surrounding other production and maintenance facilities. The purpose for this seeding is to provide a "green strip" buffer to minimize fire hazards and prevent invasion and establishment of noxious weeds in areas that will receive continued disturbance for the life of these project areas.

Common Plant Name	Scientific Name	Pounds per acre/PLS*
Forage kochia	Kochia prostrata	2
Wyoming big sagebrush	Artemisia tridentata wyomingensis Var. Gordon Creek	1
Douglas low rabbitbrush	Chiysothamnus viscidiflorus	1
Yellow sweetclover	Melilotus officinalis	1
Small burnet	Sanguisorba minor	1
Bottlebrush squirreltail	Elymus elymoides	1
Intermediate wheatgrass	Thinopyrum intermedium	1
	Total	**8**

SM-2

Sagebrush/Grass Areas

BLM SEED MIXTURES FOR THE PRICE COALBED METHANE PROJECT
The following seed mixture is for areas that will receive final reclamation. Areas would be planted to protect them from soil erosion and to restore forage production.

NOTES: _____

Common Name	Scientific Name	Pounds per acre/PLS
Grasses		
Indian ricegrass	Oryzopsis hymenoides	2
Squirreltail	Elymus elymoides	2
Thickspike wheatgrass	Elymus lanceolatus	1
Crested wheatgrass	Agropyron desertorum	1
Western wheatgrass	Pascopyrum smithii	1
Forbes		
Lewis flax	Linum perenne lewisii	1
Palmer penstemon	Penstemon palmerii	1
Small burnet	Sanguisorba	1
Shrubs		
Forage kochia	Kochia prostrata	1.5
Whitestem rabbitbrush	Chrysothamnus nauseosus albicaulis	1
Fourwing saltbrush	Atriplecx anescens	2
Wyoming big sagebrush	Artemisa tridenta	1.5
	Total	**16**

PRICE COALBED METHANE PROJECT AREA

PROPONENT: Phillips **WELL #:** 26-424

BG-1: SURFACE DISTURBANCE MITIGATION FOR CRITICAL WINTER RANGE (BLM-38 and FEIS Chapter 2. Alternative D, pg. 2-47)

The subject permit application is proposed within critical winter range (FEIS) and subject to BLM-38 requiring acre for acre mitigation for surface disturbance on critical winter range. The following condition, which serves to replace BLM-38, comes from a cooperative agreement between the River Gas Corporation, BLM-Price Field Office, the Utah Division of Wildlife Resources and the National Fish and Wildlife Foundation, under which the River Gas Corporation agrees to the following:

1. Contribute $1,250.00 (1996 dollars) for each Federal interest well (Federal surface and or subsurface ownership) permitted and drilled by RGC (or on behalf of RGC by its contractor) on big game critical winter range as depicted in the FEIS Price Coalbed Methane Project Area. (Wells meeting the above criteria for which payment will be required, will be referred to as "subject wells".) This contribution will be adjusted annually for inflation based on the Consumer Price Index (CPI), see Section II.C.6. for the reference source used for the determination of the CPI and the date in which this annual adjustment will go into effect.

Since this mitigation program is designed to address impacts of all big game critical winter range surface disturbance (roads, well pads, pipelines, etc.), contributions will be required regardless of the success or failure of the subject well to produce.

a. The recorded date for spudding for each subject well (the first boring of a hole during the drilling of a well) will serve as the reference date triggering the requirement for the mitigation contribution.

b. Contributions will be submitted (in the form of an RGC Corporate check, cashiers check or wire transfer) directly to the National Fish and Wildlife Foundation by the 30th of each month for all subject wells spudded in the preceding month.

c. All contributions will be made payable to the "National Fish and Wildlife Foundation re, Proj 97-260" and reference the "Price Field Office Wildlife Habitat Impact Mitigation Fund (RGC)".

PRICE COALBED METHANE PROJECT AREA

PROPONENT: Phillips **WELL #:** 24-424

BG-2: CRITICAL WINTER RANGE BROWSE HAND PLANTING (BLM-22)

One of the two browse species lists (checked below) are to be hand planted at the prescribed application rate and according to the following prescribed methods on critical winter range areas that are undergoing long term reclamation. This would include all pipeline corridors, berm around edge of drill pads, miscellaneous disturbed areas associated with construction such as staging areas for equipment, sidecast on road cuts, along side upgraded or new roads up to and including borrow ditch and in the termination of redundant access roads being closed. This planting shall be completed in the first planting window following completion of construction and on all other disturbed areas upon final reclamation.

Planting Methods:

Planting shall be accomplished using a labor force with specific experience in landscape restoration, hand planting methods and handling and care of browse tubling and or bareroot stock plants.

Browse plants to be utilized can be bareroot stock or tubling stock plants of 1 year old age class or greater.

Browse seedling protectors will be used to provided protection from browsing ungulates for two years. Seedling protectors will be of an open mesh rigid design that will break down when exposed to sunlight and that measures a minimum of 12 inches in length and 4 inches in diameter.

Planting shall be completed in the spring (March 1- April 1) and or fall (November 1- December 1) planting windows.

Browse plants shall be stored and handled in such a manner as to maintain viability, according to the type of browse stock being used.

Planting Species and Application Rate:

Species	[X] Sagebrush-Grass Plants Per Acre	[__] Pinyon-Juniper
Wyoming Sagebrush (Gordon Creek)	100	50
Fourwing Saltbush (Utah seed source collected at or above 5,000 feet elevation)	100	50
True Mountain Mahogany (Utah seed source)	0	50
Antelope Bitterbrush (Utah seed source)	0	50
Total	200	200

Suitable Substitutions:

Prostrate Kochia	yes	yes
Whitestem Rubber Rabbitbrush	no	yes
Utah Serviceberry	no	yes
Winterfat	yes	no

PRICE COALBED METHANE PROJECT AREA

PROPONENT: Phillips **WELL #:** 26-424

BG-3: WINTER RESTRICTIONS ON HIGH VALUE AND CRITICAL WINTER RANGE (BLM-37, FEIS, Chapter 2, Alternative D, pg. 2-48, see also Decision Record pg. 2 paragraph 4)

Restrictions on Construction Phase Activity: Prohibit construction phase activity, described below, on big game high value and critical winter range during the period (December 1 - April 15) without regard for land ownership.

This condition would not apply to normal maintenance and operation of producing wells, described below. On nonfederal lands (where the federal government does not have either surface or subsurface ownership) RGC would be allowed to conduct construction phase activity if needed to avoid breech of contract or loss of lease rights. In the event construction phase activity proceeds into the winter closure period on non federal interest lands, RGC would make available appropriate documentation to UDWR, upon request.

Construction Phase Activity: Construction phase activity is considered to include all work associated with initial drilling and construction of facilities through completion, including installation of pumping equipment, connection with ancillary facilities and tie-in with pipelines necessary for product delivery.

RGC would not be allowed to initiate construction activity unless it is reasonable to believe that such work can be finished to a logical stopping point prior to December 1 of that year. Specific activities considered to be covered by the seasonal closure include all heavy equipment operation including but not limited to the following:

- Mobilization/Demobilization or operation of heavy equipment (crawler tractor, front end loader, backhoe, road grader, etc.)
- Construction activity (road construction or upgrading, pad, pipeline, powerline, ancillary facilities, etc.),
- Drilling activity (operator would not propose or initiate drilling activity if the project could not reasonably be expected to be finished to a logical stopping point by the December 1 date of that year.
- Seismic operation, detonation of explosives

This seasonal closure would not apply to reconnaissance, survey/design and/or flagging of project work or other similar activity not requiring actions listed for heavy equipment operation.

Production Phase: A CBM well is considered to be in production phase when the well and ancillary facilities are completed to the point that they are capable of producing and delivering product for sale. It is noted that heavy equipment operation may be necessary in the performance of maintenance and operation of producing wells.

Restriction on Non Emergency Workover Operations: RGC is required to schedule non-emergency workover operations (defined below) on big game high value winter range outside the December 1 to April 15 date of the seasonal closure. RGC will be required to submit Sundry notices to BLM (or notification to UDWR on non-federal interest wells) in advance of workover operations proposed between December 1 and April 15. Sundry notices submitted as emergency work, may require independent corroboration by BLM geologist/petroleum engineers prior to work proceeding. Should BLM object to the emergency designation of the sundry notice, BLM would make notification of the objection within five working days of receipt of the sundry notice. In the absence of such notification or in the event of corroboration with the sundry notice, RGC would be permitted to proceed with the workover operation.

Non-emergency Workover Operations: Workover operations to correct or reverse a gradual loss of production over time (loss of production of five percent or less over a 60 day period) is considered to be routine or non-emergency workover operations and would not be permitted during the December 1 to April 15 time frame.

BG-3: WINTER RESTRICTIONS ON HIGH VALUE AND CRITICAL WINTER RANGE (BLM-37, FEIS, Chapter 2, Alternative D, pg. 2-48, see also Decision Record pg. 2 paragraph 4)

Emergency Workover Operations: Emergency work over operations are defined as downhole equipment failure problems or workover operation necessary to avoid shut in of the well or to avoid an immediate safety or environmental problem. Loss of production greater than five percent within a 60 day period is indicative of pump failure and will be treated as an emergency workover operation.

C. REQUIRED APPROVALS, REPORTS AND NOTIFICATIONS

Required verbal notifications are summarized in Table 1, attached.

Building Location- Contact the Price Field Office, Natural Resource Protection Specialist at least 48-hours prior to commencing construction of location.

Spud- The spud date will be reported to BLM 24-hours prior to spudding. Written notification in the form of a Sundry Notice (Form 3160-5) will be submitted to the Moab Field Office within 24-hours after spudding, regardless of whether spud was made with a dry hole digger or big rig.

Daily Drilling Reports- Daily drilling reports shall detail the progress and status of the well and shall be submitted to the Moab Field Office on a weekly basis.

Monthly Reports of Operations- In accordance with Onshore Oil and Gas Order No. 1, this well shall be reported on Minerals Management Service (MMS) Form 3160, "Monthly Report of Operations," starting the month in which operations commence and continuing each month until the well is physically plugged and abandoned. This report will be filed directly with MMS.

Sundry Notices- There will be no deviation from the proposed drilling and/or workover program without prior approval. "Sundry Notices and Reports on Wells" (Form 3160-5) will be filed, with the Moab Field Office, for approval of all changes of plans and subsequent operations in accordance with 43 CFR § 3162.3-2. Safe drilling and operating practices must be observed.

Drilling Suspensions- Operations authorized by this permit shall not be suspended for more than 30 days without prior approval of the Moab Field Office. All conditions of this approval shall be applicable during any operations conducted with a replacement rig.

Undesirable Events- Spills, blowouts, fires, leaks, accidents, or any other unusual occurrences shall be immediately reported to the BLM in accordance with requirements of NTL-3A.

Cultural Resources- If cultural resources are discovered during construction, work that might disturb the resources is to stop, and the Price Field Office is to be notified.

First Production- Should the well be successfully completed for production, the Moab Field Office will be notified when the well is placed in producing status. Such notification may be made by phone, but must be followed by a sundry notice or letter not later than five business days following the date on which the well is placed into production.

A first production conference will be scheduled as soon as the productivity of the well is apparent. This conference should be coordinated through the Price Field Office. The Price Field Office shall be notified prior to the first sale.

Well Completion Report- Whether the well is completed as a dry hole or as a producer, "Well Completion and Recompletion Report and Log" (Form 3160-4) will be submitted to the Moab Field Office not later than thirty-days after completion of the well or after completion of operations being performed, in accordance with 43 CFR § 3162.4-1. Two copies of all logs, core descriptions, core analyses, well test data, geologic summaries, sample description, and all other surveys or data obtained and compiled during the drilling, workover, and/or completion operations, will be filed with Form 3160-4. When requested, samples (cuttings and/or samples) will be submitted to the Moab Field Office.

Venting/Flaring of Gas- Gas produced from this well may not be vented/flared beyond an initial, authorized test period of 30 days or 50 MMcf, whichever first occurs, without the prior, written approval of the Moab Field Office. Should gas be vented or flared without approval beyond the authorized test period, the well may be ordered shut-in until the gas can be captured or approval to continue the venting/flaring as uneconomic is granted. In such case, compensation to the lessor shall be required for that portion of the gas that is vented/flared without approval and which is determined to have been avoidably lost.

Produced Water- An application for approval of a permanent disposal method and location will be submitted to the Moab Field Office for approval pursuant to Onshore Oil and Gas Order No.7.

Off-Lease Measurement, Storage, Commingling- Prior approval must be obtained from the Moab Field Office for off-lease measurement, off-lease storage and/or commingling (either down-hole or at the surface).

Plugging and Abandonment- If the well is completed as a dry hole, plugging instructions must be obtained from the Moab Field Office prior to initiating plugging operations.

A "Subsequent Report of Abandonment" (Form 3160-5) will be filed with the Moab Field Office within thirty-days following completion of the well for abandonment. This report will indicate where plugs were placed and the current status of surface restoration. Upon completion of approved plugging, a regulation marker will be erected in accordance with 43 CFR § 3162.6. Final abandonment will not be approved until the surface reclamation work required by the approved APD or approved abandonment notice has been completed to the satisfaction of the Price Field Office or the appropriate surface managing agency.

TABLE 1

NOTIFICATIONS

Notify Don Stephens (work: 435-636-3608, home: 435-637-7967)
or Mike Kaminski (work: 435-636-3640, home: 435-637-2518)
of the BLM, Price Field Office for the following:

2 days prior to commencement of dirt work, construction and reclamation;

1 day prior to spudding;

50 feet prior to reaching the surface casing setting depth.

If the people at the above numbers cannot be reached, notify the Moab Field Office at (435) 259-2100. If unsuccessful, contact the person listed below.

Well abandonment operations require 24 hour advance notice and prior approval. In the case of newly drilled dry holes, verbal approval can be obtained by calling the Moab Field Office at (435) 259-2100. If approval is needed after work hours, you may contact the following:

Eric Jones, Petroleum Engineer	Office: (435) 259-2117 Home: (435) 259-2214

Form 3160-5
(June 1990)

UNITED STATES
DEPARTMENT OF THE INTERIOR
BUREAU OF LAND MANAGEMENT

FORM APPROVED
Budget Bureau No. 1004-0135
Expires: March 31, 1993

SUNDRY NOTICES AND REPORTS ON WELLS

Do not use this form for proposals to drill or to deepen or reentry to a different reservoir.
Use "APPLICATION FOR PERMIT--" for such proposals

SUBMIT IN TRIPLICATE

CONFIDENTIAL

5. Lease Designation and Serial No.
U-61154

6. If Indian, Allottee or Tribe Name
N/A

7. If Unit or CA, Agreement Designation
Drunkards Wash UTU-67921X

1. Type of Well
☐ Oil ☒ Gas ☐ Other

8. Well Name and No.
USA 26-424

2. Name of Operator
Phillips Petroleum Company

9. API Well No.
43-007-30620

3. Address and Telephone No.
6825 S. 5300 W. P.O. Box 851 Price, Utah 84501 (435) 613-9777

10. Field and Pool, or Exploratory Area
Drunkards Wash

4. Location of Well (Footage, Sec.,T., R:, M., or Survey Description)
1757' FNL, 680' FWL
SW/4, NW/4, Sec.26, T14S, R08E,SLB&M

11. County or Parish, State
Carbon County, Utah

12. **CHECK APPROPRIATE BOX(s) TO INDICATE NATURE OF NOTICE, REPORT, OR OTHER DATA**

TYPE OF SUBMISSION	TYPE OF ACTION	
☐ Notice of Intent	☒ Spud Notice	☐
☐ Subsequent Report	☐ Change of Name	☐ Change of Plans
☐ Final Abandonment Notice	☐ Recompletion	☐ New Construction
	☐ Plugging Back	☐ Non-Routine Fracturing
	☐ Casing Repair	☐ Water Shut-Off
	☐ Altering Casing	☐ Conversion to Injection
	Other _____	Dispose Water

13. Describe Proposed or Completed Operations (Clearly state all pertinent details, and give pertinent dates, including estimated date of starting any proposed work. If well is directionally drilled, give subsurface locations and measured and true vertical depths for all markers and zones pertinent to this work.)*

Please be advised that the USA 26-424 well was spud on 6/16/01 at 9:30 am
Pense Bros. Rig #2
Dry Drill

RECEIVED
JUN 22 2001
DIVISION OF
OIL, GAS AND MINING

14. I hereby certify that the foregoing is true and correct

Signed Frankie Hathaway Title Administrative Assistant Date 6/18/01

(This space for Federal or State office use)

Approved by _____ Title _____ Date _____
Conditions of approval, if any:

Title 18 U.S.C. Section 1001, makes it a crime for any person knowingly and willfully to make to any department or agency of the United States any false, fictitious or fraudulent statements or representations as to any matter within its jurisdiction.

* See Instructions on Reverse Side

STATE OF UTAH
DIVISION OF OIL, GAS AND MINING

ENTITY ACTION FORM - FORM 6

OPERATOR Phillips Petroleum Company
ADDRESS 6825 S. 5300 W. P.O. Box 851
Price, UT 84501

OPERATOR ACCT. NO. 1475

ACTION CODE	CURRENT ENTITY NO.	NEW ENTITY NO.	API NUMBER	WELL NAME	WELL LOCATION QQ	SC	TP	RG	COUNTY	SPUD DATE	EFFECTIVE DATE
~~B~~ A	99999	13167	43-007-30650	USA 23-445	NENW	23	15S	08E	Carbon	06/8/01	6-20-01

WELL 1 COMMENTS: New single well, new spud outside PA and outside of Unit boundary. CONFIDENTIAL
6-20-01

~~B~~ A	99999	13168	43-007-30506	Utah 34-510	SENE	34	13S	09E	Carbon	06/7/01	6-20-01

WELL 2 COMMENTS: New single well, new spud outside PA but inside of Unit boundary. CONFIDENTIAL
6-20-01

~~B~~ A	99999	13169	43-007-30712	Utah 27-457	SENE	27	14S	08E	Carbon	06/12/01	6-20-01

WELL 3 COMMENTS: New single well, new spud outside PA but inside of Unit boundary. CONFIDENTIAL
6-20-01

~~B~~ A	99999	13170	43-007-30620	USA 26-424	SWNW	26	14S	08E	Carbon	06/16/01	6-20-01

WELL 4 COMMENTS: New single well, new spud outside PA but inside of Unit boundary. CONFIDENTIAL
6-20-01

~~B~~ A	99999	13171	43-007-30633	USA 05-411	SENW	05	14S	09E	Carbon	06/17/01	6-20-01

WELL 5 COMMENTS: New single well, new spud outside PA but inside of Unit boundary. CONFIDENTIAL

ACTION CODES (See Instructions on back of form)
- A - Establish new entity for new well (single well only)
- B - Add new well to existing entity (group or unit well)
- C - Re-assign well from one existing entity to another existing entity
- D - Re-assign well from one existing entity to a new entity
- E - Other (explain in comments section)

NOTE: Use COMMENT section to explain why each Action Code was selected.

(3/89)

RECEIVED
JUN 20 2001
DIVISION OF
OIL, GAS AND MINING

Frankie Hathaway *Frankie Hathaway*
Signature

Administrative Assistant 6/18/01
Title Date

Phone No. (435)613-9777

Form 3160-5
(June 1990)

UNITED STATES
DEPARTMENT OF THE INTERIOR
BUREAU OF LAND MANAGEMENT

FORM APPROVED
Budget Bureau No. 1004-0135
Expires: March 31, 1993

SUNDRY NOTICES AND REPORTS ON WELLS

Do not use this form for proposals to drill or to deepen or reentry to a different reservoir.
Use "APPLICATION FOR PERMIT--" for such proposals

SUBMIT IN TRIPLICATE

CONFIDENTIAL

5. Lease Designation and Serial No.
U-61154

6. If Indian, Allottee or Tribe Name
N/A

7. If Unit or CA, Agreement Designation
Drunkards Wash UTU-67921X

1. Type of Well
☐ Oil ☒ Gas ☐ Other

8. Well Name and No.
USA 26-424

2. Name of Operator
Phillips Petroleum Company

9. API Well No.
43-007-30620

3. Address and Telephone No.
6825 S. 5300 W. P.O. Box 851 Price, Utah 84501 (435) 613-9777

10. Field and Pool, or Exploratory Area
Drunkards Wash

4. Location of Well (Footage, Sec.,T., R:, M., or Survey Description)
1757' FNL, 680' FWL
SW/4, NW/4, Sec.26, T14S, R08E,SLB&M

11. County or Parish, State
Carbon County, Utah

12. **CHECK APPROPRIATE BOX(s) TO INDICATE NATURE OF NOTICE, REPORT, OR OTHER DATA**

TYPE OF SUBMISSION	TYPE OF ACTION	
☐ Notice of Intent	☒ Spud Notice	☐
☐ Subsequent Report	☐ Change of Name	☐ Change of Plans
☐ Final Abandonment Notice	☐ Recompletion	☐ New Construction
	☐ Plugging Back	☐ Non-Routine Fracturing
	☐ Casing Repair	☐ Water Shut-Off
	☐ Altering Casing	☐ Conversion to Injection
	Other _____	Dispose Water

13. Describe Proposed or Completed Operations (Clearly state all pertinent details, and give pertinent dates, including estimated date of starting any proposed work. If well is directionally drilled, give subsurface locations and measured and true vertical depths for all markers and zones pertinent to this work.)*

Please be advised that the USA 26-424 well was spud on 6/16/01 at 9:30 am
Pense Bros. Rig #24
Dry Drill

RECEIVED
JUL 12 2001
DIVISION OF
OIL, GAS AND MINING

CONFIDENTIAL

14. I hereby certify that the foregoing is true and correct

Signed Frankie Hathaway Title Administrative Assistant Date 7/10/01

(This space for Federal or State office use)

Approved by _____ Title _____ Date _____
Conditions of approval, if any:

Title 18 U.S.C. Section 1001, makes it a crime for any person knowingly and willfully to make to any department or agency of the United States any false, fictitious or fraudulent statements or representations as to any matter within its jurisdiction.

*** See Instructions on Reverse Side**

Form 3160-5
(June 1990)

UNITED STATES
DEPARTMENT OF THE INTERIOR
BUREAU OF LAND MANAGEMENT

FORM APPROVED
Budget Bureau No. 1004-0135
Expires: March 31, 1993

SUNDRY NOTICES AND REPORTS ON WELLS

Do not use this form for proposals to drill or to deepen or reentry to a different reservoir.
Use "APPLICATION FOR PERMIT--" for such proposals

SUBMIT IN TRIPLICATE

5. Lease Designation and Serial No.
U-61154

6. If Indian, Allottee or Tribe Name
N/A

7. If Unit or CA, Agreement Designation
Drunkards Wash UTU-67921X

1. Type of Well
☐ Oil ☒ Gas ☐

CONFIDENTIAL

8. Well Name and No.
USA 26-424

2. Name of Operator
Phillips Petroleum Company

9. API Well No.
43-007-30620

3. Address and Telephone No.
6825 S. 5300 W. P.O. Box 851 Price, Utah 84501 (435) 613-9777

10. Field and Pool, or Exploratory Area
Drunkards Wash

4. Location of Well (Footage, Sec.,T., R:, M., or Survey Description)
1757' FNL, 680' FWL
SW/4,NW/4, Sec.26, T14S,R08E, SLB&M

11. County or Parish, State
Carbon County, Utah

12. **CHECK APPROPRIATE BOX(s) TO INDICATE NATURE OF NOTICE, REPORT, OR OTHER DATA**

TYPE OF SUBMISSION	TYPE OF ACTION	
☐ Notice of Intent	☒ Well Report	☐
☐ Subsequent Report	☐ Change of Name	☐ Change of Plans
☐ Final Abandonment Notice	☐ Recompletion	☐ New Construction
	☐ Plugging Back	☐ Non-Routine Fracturing
	☐ Casing Repair	☐ Water Shut-Off
	☐ Altering Casing	☐ Conversion to Injection
	Other _____	Dispose Water

13. Describe Proposed or Completed Operations (Clearly state all pertinent details, and give pertinent dates, including estimated date of starting any proposed work. If well is directionally drilled, give subsurface locations and measured and true vertical depths for all markers and zones pertinent to this work.)*

See Attached.

COPY

CONFIDENTIAL

RECEIVED
JUL 12 2001
DIVISION OF
OIL, GAS AND MINING

14. I hereby certify that the foregoing is true and correct

Signed Mrantie Hathaway Title Administrative Assistant Date 7/10/01

(This space for Federal or State office use)

Approved by _____ Title _____ Date _____
Conditions of approval, if any:

Title 18 U.S.C. Section 1001, makes it a crime for any person knowingly and willfully to make to any department or agency of the United States any false, fictitious or fraudulent statements or representations as to any matter within its jurisdiction.

* See Instructions on Reverse Side

DRUNKARDS WASH PROJECT
DAILY WELL REPORT

CONFIDENTIAL

USA **26-424** API NO: 4300730620

1757' FNL, 680' FWL

SWNW SEC: 26 TWN: 14S RNG: 08E SPUD TIME/DATE: 6/16/01 9:30:00 AM

COUNTY: Carbon TD TIME/DATE: 6/28/01 7:00:00 AM

ELEVATION: 7004 TD DEPTH: 3885

DRILLING CONTRACTOR: pense Brothers Rig #24 ON-LINE TIME/DATE:

Bit Information

Type	Size	In	Out	Hours	Rotating Hours
Air Hammer	15 in	0.00	5.00	1	0.5
Air Hammer	11 in	5.00	420.00	4	3
Air Hammer	7 7/8	420.00	2755.00	25	20
Tri-cone	7 7/8	2755.00	3885.00	39	14

Conductor Casing

Bore Hole Size: 15 in Conductor From: 0.00 To: 5.00

Casing Description: 12 3/4in PE Number of Joints: 1 Set @: 5.00

Cement: Amount:

Cement Report:

Surface Casing

Bore Hole Size: 11 in Surface Casing From: 5.00 To: 420.00

Casing Description: 8 5/8 in 24#/ft J-55 Number of Joints: 14 Set @: 407.40

Cement: G + 2%S-1 + 1/4#/sk D-29 Amount: 175.00

Cement Report: rigged up hall., safety meeting, tested lines, then pumped 10 bbls. Of water & 10 bbl. Gell pill, pumped till broke circulation, then pumped 175 sks. Of g cement with 10 bbls. Returns, shut valve @ 5:30am, rigged down & wait on bop test. Bs

Production Casing

Bore Hole Size: 7 7/8 in Prod.Casing From: 0.00 To: 3890.00

Casing Description: 5 1/2 in 17#/ft N-80 Number of Joints: 89 Length: 3848.00

Lead Cement: 50/50 POZ, 8%D20, 10%D44, 2%S001, 1/4#/sk D29 Amount: 380.00

Tail Cement: 10-1 RFC Amount: 90.00

Cement Report: rigged up hall., safety meeting, tested lines, pumped 25 bbls. Of water & 10 bbls. Of gell, pumped water till broke circulation, then pumped 380 sks of 50/50 poz & 90 sks of rfc, displaced with 89 bbls. Water, with 6 bbs. Of returns of good cement,plug down time @ 3:55pm. Note (pressure up to 1900 psi @ end of displacement cement was setting up possible temparture effected set up time on lead cement, last 3 jobs same problem bs.)

Float Equipment: 5 1/2 casing Centralizers ran on: 2,5,9,13,21,

CONFIDENTIAL

Drilling Data

DAY 1 6/17/01

CURRENT DEPTH: 420 CURRENT OPERATIONS: waiting on cement toset up ROTATING HRS: 3.50

7am-8am moving on location, 8am-9am rigged up & serviced rig, 9am-10am drilled conductor & tripped out, 10am-11am set 5 ft. of conductor & set up to drill surface hole, 11am-2pm drilling surface hole to 420 ft., 2pm-3pm cleaned hole & tripped out, 3pm-4pm set up to run 8 5/8 pipe landed pipe @ 407.40, 4pm-3:30am waiting on cementers to show (cement pump truck broke down on 457 loc. Called out second crew for job if truck could not be fixed.), 3:30am- 4:30am rigged up to pump cement, 4:30am-5:30am pumped 175 sks of cement with 10 bbls. returns, shut valve @ 5:30am, 5:30am-7am waiting on cement to set up. Bs.

Estimated Daily Cost: [redacted]

DAY 2 6/18/01

CURRENT DEPTH: 420 CURRENT OPERATIONS: shut down for days off ROTATING HRS: 0.00

7am-10am waiting on cement to set up, 10am-10:30am installed bop, 10:30am-1:30pm waiting on testers, 1:30pm-2:30pm tested bop, 2:30pm-4pm nippled up blow line & can set up to drill, 4pm-5pm changed bits, 5pm-6pm laid down derrick, 6pm-7pm shut down for week off, 7pm-7am no activity. Bs

Estimated Daily Cost: [redacted]

DAY 3 6/27/01

CURRENT DEPTH: 2515 CURRENT OPERATIONS: drilling ROTATING HRS: 17.0

7am-8am set to drill, 8am-9am changed out choke on hammer, 9am-10am tripped in hole & drilled out cement, 10am-11am tripped out to repair hammer, 11am-1pm worked on rig & hammer, 1pm-2pm tripped back in hole, 2pm-3pm drilling , 3pm-4pm @ 595 ft., 4pm-7pm @ 1045 ft., 7pm-10pm @ 1435 ft., 10pm-1am @ 1765 ft., 1am-4am @ 2185 ft., 4am-7am @ 2515 ft., bs

Estimated Daily Cost: [redacted]

DAY 4 6/28/01

CURRENT DEPTH: 3885 CURRENT OPERATIONS: drilling ROTATING HRS: 17.0

7am-8am drilling @ 2635 ft., 8am-10am drilled to 2755 ft. cleaned hole & started out of hole, 10am-12pm out of hole, 12pm-1pm run drill collars, 1pm-2pm worked on rig, 2pm-4:45pm tripped back to bottom, 4:45pm-6pm drilling @ 2740 ft., 6pm-9pm @ 3040 ft., 9pm-12am @ 3340 ft., 12am-3am @ 3615 ft., 3am-6am @ 3825 ft., 6am-7am td well @ 3885 ft. bs

Estimated Daily Cost: [redacted]

DAY 5 6/29/01

CURRENT DEPTH: 3890 CURRENT OPERATIONS: moving drill rig ROTATING HRS: 0.00

7am-8am cleaned hole, 8am-10am tripped up to check valve (dragging coming out of hole), 10am-11am mixed mud (10 tubs), 11am-1:30pm tripped back to bottom, 1:30pm- 2pm mixed 2 more tubs of mud (foammed up), 2pm-4pm finished tripping to bottom (75 ft. of fill) 4pm-6pm circulated hole 2 hrs., 6pm-7pm short tripped, 7pm-7:50pm back on bottom, 7:50pm-10pm circulated 2 more hrs., 10pm-10:30pm changed out saver sub, 10:30pm-2am tripped out of hole, 2am-3am laid down collars & rigged up loggers, 3am-5:30am logged well, 5:30am-6am rigged down loggers & released rig @ 6pm, 6pm-7am rigged down & started moving. Bs

Estimated Daily Cost: [redacted]

DAY 6 6/30/01

CURRENT DEPTH: 3890 CURRENT OPERATIONS: run 5 1/2 casing ROTATING HRS: 0.00

rigged up on well, set pipe rack & unloaded pipe, talley pipe, & set up to go in hole with casing. Bs

Estimated Daily Cost: [redacted]

DAY 7 7/1/01

CURRENT DEPTH: 3890 CURRENT OPERATIONS: scraper run Monday morn. ROTATING HRS: 0.00

started in hole with casing, ran 89 jts. Of 5 1/2 pipe, landed @ 3847.63, waited on hall. 2 hrs. bulk trucks broke down, rigged up hall. When showed up, pumped 380 sks of lead & 90 sks of tail, rigged down hall., nippled down bop & nippled up wellhead, shut down till Monday morning. Bs

Estimated Daily Cost: [redacted]

Form 3160-4
(November 1983)
(formerly 9-330)

UNITED STATES
DEPARTMENT OF THE INTERIOR
BUREAU OF LAND MANAGEMENT

SUBMIT IN DUPLICATE
(See other Instructions on reverse side)

Form approved.
Budget Bureau No.1004-0137
Expires August 31,1985

WELL COMPLETION OR RECOMPLETION REPORT AND LOG*

1a. TYPE OF WELL: OIL WELL ☐ GAS WELL ☒ DRY ☐ Other

b. TYPE OF COMPLETION: NEW WELL ☒ WORK OVER ☐ DEEP-EN ☐ PLUG BACK ☐ DIFF. RESVR. ☐ Other

CONFIDENTIAL

2. NAME OF OPERATOR: Phillips Petroleum Company

3. ADDRESS OF OPERATOR: 6825 S. 5300 W. P.O. Box 851 Price, Utah 84501 (435) 613-9777

CONFIDENTIAL PERIOD EXPIRED 8-18-02

4. LOCATION OF WELL (Report location clearly and in accordance with any State requirements)
At surface: 1757' FNL, 680' FWL
At top prod. interval reported below
At total depth

5. LEASE DESIGNATION AND SERIAL NO.: U-61154
6. IF INDIAN, ALLOTTEE OR TRIBE NAME: N/A
7. UNIT AGREEMENT NAME: Drunkards Wash UTU-67921X
8. FARM OR LEASE NAME: USA
9. WELL NO.: 26-424
10. FIELD AND POOL, OR WILDCAT: Drunkards Wash
11. SEC., T., R., M., OR BLOCK AND SURVEY OR AREA: SW/NW, Sec. 26,T14S,R08E,SLB&M

14. PERMIT NO.	DATE ISSUED	12. COUNTY	13. STATE
43-007-30620	10/4/99	Carbon	UTAH

15. DATE SPUDDED	16. DATE T.D. REACHED	17. DATE COMPL. (Ready to prod.)	18. ELEVATIONS (DF, REB, RT, GR, ETC.)	19. ELEV. CASINGHEAD
6/16/01	6/28/01	7/18/01	7004' GR	N/A

20. TOTAL DEPTH, MD & TVD	21. PLUG BACK T.D., MD & TVD	22. IF MULTIPLE COMPL., HOW MANY	23. INTERVALS DRILLED BY	ROTARY TOOLS	CABLE TOOLS
3885'	3848'	N/A	→	to TD	—

24. PRODUCING INTERVAL(S), OF THIS COMPLETION--TOP, BOTTOM, NAME (MD OR TVD)
Ferron Coal- Top Coal 3396' & Bottom Coal 3475'

25. WAS DIRECTIONAL SURVEY MADE: NO

26. TYPE ELECTRIC AND OTHER LOGS RUN: 7-5-01 7-16-01 7-5-01
Dual Induct.Laterolog,CBL, Spect.Litho Dens.Comp.Neut.GR log

27. WAS WELL CORED: No

28. CASING RECORD (Report all strings set in well)

CASING SIZE	WEIGHT, LB./FT.	DEPTH SET (MD)	HOLE SIZE	CEMENT RECORD	AMOUNT PULLED
12-3/4"	Conductor PE	5'	15"	175sksG+2%S1,+1/4#sk D29	
8-5/8"	J-55 24#	407'	11"	380 sks 50/50poz,8%D20,10%D44,1/4#/skD20,2%S1	
5-1/2"	N-80 17#	3848'	7-7/8"	90sks10-1 RFC (thixotropic)	

29. LINER RECORD

SIZE	TOP (MD)	BOTTOM (MD)	SACKS CEMENT	SCREEN (MD)

30. TUBING RECORD

SIZE	DEPTH SET (MD)	PACKER SET
2-7/8"	3688'	

31. PERFORATION RECORD (Interval, size and number)

Ferron Coal:
Upper: 3396'-3398', 3403'-3410', 3422'-3426', 3448'-3452', 3462'-3466', 3468'-3475' 4spf .88"
Middle: 3448'-3452', 3462'-3466', 3468'-3475' 4spf .88"
Lower: 3527'-3529', 3545'-3550', 3582'-3584', 3596'-3603' 4spf .88"

32. ACID, SHOT, FRACTURE, CEMENT SQUEEZE,ETC.

DEPTH INTERVAL (MD)	AMOUNT AND KIND OF MATERIAL USED
Upper: 3396'-3475'	53,200# 20/40; 88,200# 16/30; 61,654 gal fluid
Middle: 3448'-3475'	9,000#, 20/40; 16,163 gal fluid
Lower: 3527'-3603'	28,000#, 20/40; 33,000#, 16/30; 36,071 gal fluid

33. PRODUCTION

DATE FIRST PRODUCTION	PRODUCTION METHOD (Flowing, gas lift, pumping---size and type of pump)	WELL STATUS (Producing or shut-in)
7/26/01	Pumping 2-1/2x2x16 RWAC	Producing

DATE OF TEST	HOURS TESTED	CHOKE SIZE	PROD'N. FOR TEST PERIOD	OIL---BBL.	GAS---MCF.	WATER---BBL.	GAS-OIL RATIO
7/26/01	24	N/A	→	N/A	26	109	N/A

FLOW. TUBING PRESS.	CASING PRESSURE	CALCULATED 24-HOUR RATE	OIL---BBL.	GAS---MCF.	WATER---BBL.	OIL GRAVITY - API (CORR.)
26	25	→	N/A	26	109	

34. DISPOSITION OF GAS (Sold,used for fuel, vented, etc.): SOLD

TEST WITNESSED BY: Jerry H. Dietz

COPY

35. LIST OF ATTACHMENTS

36 I hereby certify that the foregoing and attached information is complete and correct as determined from all available records

SIGNED Jean Semborski TITLE Permitting Analyst DATE 8/16/01

CONFIDENTIAL

See Spaces for Additional Data on Reverse Side

WELL NUMBER: USA 26-424

37 SUMMARY OF POROUS ZONES: (Show all important zones of porosity and contents thereof; cored intervals; and all drill-stem, tests, including depth interval tested, cushion used, time tool open, flowing and shut-in pressures, and recoveries):

FORMATION	TOP	BOTTOM	DESCRIPTION, CONTENTS, ETC.
Ferron	3380'	3692'	Coals and Sandstones Coal Interval: 3380'-3692'

38. GEOLOGIC MARKERS

NAME	TOP MEAS.DEPTH	TOP TRUE VERT. DEPTH
Blue Gate Bentonite	3796'	
Tununk Shale	3716'	
Ferron Sandston	3380'	

FORM 9

STATE OF UTAH

DIVISION OF OIL, GAS AND MINING

ORIGINAL

SUNDRY NOTICES AND REPORTS ON WELLS

Do not use this form for proposals to drill new wells, deepen existing wells, or to reenter plugged and abandoned wells. Use APPLICATION FOR PERMIT TO DRILL OR DEEPEN form for such proposals.

CONFIDENTIAL

5. Lease Designation and Serial Number:	U-61154
6. If Indian, Allottee or Tribe Name:	N/A
7. Unit Agreement Name:	UTU67921X Drunkards Wash
8. Well Name and Number:	USA 24-424
9. API Well Number:	43-007-30620
10. Field or Pool, or Wildcat:	Drunkards Wash

1. Type of Well: OIL ☐ GAS ☒ OTHER:

2. Name of Operator: Phillips Petroleum Company

3. Address and Telephone Number: 6825 South 5300 West, P.O. Box 851, Price, UT 84501 (435) 613-9777

4. Location of Well Footages: 1757' FNL, 680' FWL

QQ, Sec., T., R., M.: SW/4, NW/4, SEC. 26, T14S, R08E, SLB & M

County: Carbon County

State: Utah

11. CHECK APPROPRIATE BOXES TO INDICATE NATURE OF NOTICE, REPORT, OR OTHER DATA

NOTICE OF INTENT
(Submit in Duplicate)

- ☐ Abandon
- ☐ Repair Casing
- ☐ Change of Plans
- ☐ Convert to Injection
- ☐ Fracture Treat or Acidize
- ☐ Multiple Completion
- ☐ Other
- ☐ New Construction
- ☐ Pull or Alter Csg
- ☐ Recomplete
- ☐ Reperforate
- ☐ Vent or Flare
- ☐ Water Shut-Off

Approximate date work will start

SUBSEQUENT REPORT
(Submit Original Form Only)

- ☐ Abandon *
- ☐ Repair Casing
- ☐ Change of Plans
- ☐ Convert to Injection
- ☐ Fracture Treat or Acidize
- ☒ Other Chemical/Flush Treatment
- ☐ New Construction
- ☐ Pull or Alter Csg
- ☐ Reperforate
- ☐ Vent or Flare
- ☐ Water Shut-Off

Date of work completion 09/06/2001

Report results of Multiple Completions and Recompletions to different reservoirs on WELL COMPLETION OR RECOMPLETION REPORT AND LOG form.

* Must be accompanied by a cement verification report.

12. DESCRIBE PROPOSED OR COMPLETED OPERATIONS (Clearly state all pertinent details, and give pertinent dates. If well is directionally drilled, give subsurface locations and measured and true vertical depths for all markers and zones pertinent to this work.)

Please be advised that the above referenced well was chemically treated with 4000 gallons of low Ph fluid & 250 gallons of 7 1/2% HCL on 09/06/01.

RECEIVED

OCT 1 5 2001

DIVISION OF OIL, GAS AND MINING

13.

Name & Signature: Lynnette Allred Lynnette Allred Title: Administrative Assistant Date: 09/06/2001

(This space for state use only)

(4/94) (See Instructions on Reverse Side)

ConocoPhillips

Divisions of Oil, Gas, and Mining
Attn: Mr. John Baza
1594 West North Temple,
Suite 1210, P. O. Box 145801
Salt Lake City, UT 84114-5801

Re: Notice of Address Change, Merger and Name Change
Address Change effective **December 2, 2002**
Merger and Name Change effective **December 31, 2002**

Gentlemen:

1. Effective December 2, 2002, Phillips Petroleum Company will close its Englewood, Colorado Rocky Mountain Region office. After that time, all correspondence, notices and invoice for Land related matters should be directed to the address(es) noted below. Note that until December 31, 2002, all properties in which Phillips held an interest will continue to be operated by Phillips Petroleum Company, a wholly-owned subsidiary of ConocoPhillips.

2. On December 31, 2002, Phillips Petroleum Company and Conoco Inc. will merge, and the surviving corporation will be renamed "ConocoPhillips Company".

In accordance with the notice provisions of the Operating Agreements and other agreements, if any, between our companies, please adjust your company/organization records, effective for address purposes as of December 2, 2002, and for company name purposes, as of January 1, 2003, to reflect the following information for addressing and delivery of notices, invoicing and payment, and communications with ConocoPhillips Company. This will also apply to Lease Sale notices and other lease-related correspondence and notifications.

U.S. Mail Address:

ConocoPhillips Company
P.O. Box 2197
Houston, Texas 77252
Attn: Chief Landman,
San Juan/Rockies

Physical Address & Overnight Delivery:

ConocoPhillips Company
550 Westlake Park Blvd.
Three Westlake Park
3WL, Room WL 9000
Houston, Texas 77079
Attn: Chief Landman,
San Juan/Rockies

All ballots and official notices/responses sent by facsimile transmission should be sent to the following contact:

Attn: Chief Landman,
San Juan/Rockies

Fax No.: 832-486-2688 or
832-486-2687

Please contact the undersigned immediately if you have any questions. This notice does not apply to royalty inquiries, joint interest billings, or revenue remittances. Please continue to use the same addresses you are currently using for these matters

Sincerely, William Rainbolt

RECEIVED
DEC 0 2 2002
DIVISION OF
OIL, GAS AND MINING

STATE OF UTAH
DEPARTMENT OF NATURAL RESOURCES
DIVISION OF OIL, GAS AND MINING

FORM 9

SUNDRY NOTICES AND REPORTS ON WELLS

Do not use this form for proposals to drill new wells, significantly deepen existing wells below current bottom-hole depth, reenter plugged wells, or to drill horizontal laterals. Use APPLICATION FOR PERMIT TO DRILL form for such proposals.

5. LEASE DESIGNATION AND SERIAL NUMBER:

6. IF INDIAN, ALLOTTEE OR TRIBE NAME:

7. UNIT or CA AGREEMENT NAME:

1. TYPE OF WELL: OIL WELL ☐ GAS WELL ☐ OTHER All

8. WELL NAME and NUMBER: See Attached List

2. NAME OF OPERATOR: Phillips Petroleum Company

9. API NUMBER: See List

3. ADDRESS OF OPERATOR: 980 Plaza Office CITY Bartlesville STATE OK ZIP 74004

PHONE NUMBER: (918) 661-4415

10. FIELD AND POOL, OR WILDCAT:

4. LOCATION OF WELL

FOOTAGES AT SURFACE: See Attached List

COUNTY:

QTR/QTR, SECTION, TOWNSHIP, RANGE, MERIDIAN:

STATE: UTAH

11. CHECK APPROPRIATE BOXES TO INDICATE NATURE OF NOTICE, REPORT, OR OTHER DATA

TYPE OF SUBMISSION	TYPE OF ACTION		
☐ NOTICE OF INTENT (Submit in Duplicate)	☐ ACIDIZE	☐ DEEPEN	☐ REPERFORATE CURRENT FORMATION
Approximate date work will start:	☐ ALTER CASING	☐ FRACTURE TREAT	☐ SIDETRACK TO REPAIR WELL
	☐ CASING REPAIR	☐ NEW CONSTRUCTION	☐ TEMPORARILY ABANDON
	☐ CHANGE TO PREVIOUS PLANS	☑ OPERATOR CHANGE	☐ TUBING REPAIR
	☐ CHANGE TUBING	☐ PLUG AND ABANDON	☐ VENT OR FLARE
☑ SUBSEQUENT REPORT (Submit Original Form Only)	☐ CHANGE WELL NAME	☐ PLUG BACK	☐ WATER DISPOSAL
Date of work completion:	☐ CHANGE WELL STATUS	☐ PRODUCTION (START/RESUME)	☐ WATER SHUT-OFF
	☐ COMMINGLE PRODUCING FORMATIONS	☐ RECLAMATION OF WELL SITE	☐ OTHER:
	☐ CONVERT WELL TYPE	☐ RECOMPLETE - DIFFERENT FORMATION	

12. DESCRIBE PROPOSED OR COMPLETED OPERATIONS. Clearly show all pertinent details including dates, depths, volumes, etc.

Conoco Inc. was merged into Phillips Petroleum Company, the surviving corporation, on December 31, 2002. In connection with this merger and effective on the same date, the name of the surviving corporation was changed to "ConocoPhillips Company". We are requesting that a new Operator Number be assigned to ConocoPhillips Company.

Please send production reporting forms to Herb Henderson at ConocoPhillips Company, 315 S. Johnstone, 980 Plaza Office, Bartlesville, OK 74004. Herb's phone number is 918-661-4415.

Current Operator
Phillips Petroleum Company
Steve de Albuquerque

New Operator
ConocoPhillips Company
Yolanda Perez

RECEIVED
JAN 0 8 2003
DIV. OF OIL, GAS & MINING

NAME (PLEASE PRINT) Yolanda Perez TITLE Sr. Regulatory Analyst

SIGNATURE Yolanda Perez DATE 12/30/2002

(This space for State use only)

(5/2000) (See Instructions on Reverse Side)

ConocoPhillips

SECRETARY'S CERTIFICATE

I, the undersigned, Jennifer M. Garcia, Assistant Secretary of ConocoPhillips Company, formerly Phillips Petroleum Company, organized and existing under and by virtue of the laws of the State of Delaware (the "Corporation"), hereby certify that:

1. As Assistant Secretary I am authorized to execute this certificate on behalf of the Corporation.

2. The attached photocopy of the Certificate of Amendment to the Restated Certificate of Incorporation of Phillips Petroleum Company (to be renamed ConocoPhillips Company) is a true and correct copy as filed in the office of the Secretary of State of Delaware on the 12th day of December 2002, with an effective date of January 1, 2003 and such Certificate of Amendment has not been modified, amended, rescinded or revoked and is in full force and effect as of the date hereof.

3. The attached photocopy of the Certificate of Merger of Conoco Inc. with and into ConocoPhillips Company is a true and correct copy as filed in the office of the Secretary of State of Delaware on the 12th day of December 2002, with an effective date of December 31, 2002 and such Certificate of Merger has not been modified, amended, rescinded or revoked and is in full force and effect as of the date hereof.

IN WITNESS WHEREOF, I have hereunto set my hand as Assistant Secretary and affixed the corporate seal of the Corporation this 7th day of January 2003.

Assistant Secretary
ConocoPhillips Company

STATE OF TEXAS §
§
COUNTY OF HARRIS §

This instrument was acknowledged before me on January 7, 2003, by Jennifer M. Garcia, Assistant Secretary of ConocoPhillips Company, a Delaware corporation, on behalf of said Corporation.

SUSAN F. SHORT
NOTARY PUBLIC
STATE OF TEXAS
EXPIRES
11-12-2005

Notary Public

RECEIVED
JAN 0 8 2003
DIV. OF OIL, GAS & MINING

Delaware

The First State

I, HARRIET SMITH WINDSOR, SECRETARY OF STATE OF THE STATE OF DELAWARE, DO HEREBY CERTIFY THE ATTACHED IS A TRUE AND CORRECT COPY OF THE CERTIFICATE OF AMENDMENT OF "PHILLIPS PETROLEUM COMPANY", CHANGING ITS NAME FROM "PHILLIPS PETROLEUM COMPANY" TO "CONOCOPHILLIPS COMPANY", FILED IN THIS OFFICE ON THE TWELFTH DAY OF DECEMBER, A.D. 2002, AT 1:41 O'CLOCK P.M.

AND I DO HEREBY FURTHER CERTIFY THAT THE EFFECTIVE DATE OF THE AFORESAID CERTIFICATE OF AMENDMENT IS THE THIRTY-FIRST DAY OF DECEMBER, A.D. 2002, AT 11 O'CLOCK P.M.

RECEIVED
JAN 0 8 2003
DIV. OF OIL, GAS & MINING

Harriet Smith Windsor

Harriet Smith Windsor, Secretary of State

0064324 8100

AUTHENTICATION: 2183360

030002793

DATE: 01-02-03

STATE OF DELAWARE
SECRETARY OF STATE
DIVISION OF CORPORATIONS
FILED 01:41 PM 12/12/2002
020763238 - 0064324

CERTIFICATE OF AMENDMENT

to the

RESTATED CERTIFICATE OF INCORPORATION

of

PHILLIPS PETROLEUM COMPANY
(to be renamed ConocoPhillips Company)

Phillips Petroleum Company ("Phillips"), a corporation organized and existing under the General Corporation Law of the State of Delaware (the "DGCL"), hereby certifies that:

1. The amendments to Phillips' Restated Certificate of Incorporation set forth below were duly adopted in accordance with the provisions of Section 242 of the DGCL and have been consented to in writing by the sole stockholder of Phillips in accordance with Section 228 of the DGCL.

2. Phillips' Restated Certificate of Incorporation is hereby amended by deleting Article I thereof and replacing in lieu thereof a new Article I reading in its entirety as follows:

"The name of the corporation (which is hereinafter referred to as the "Corporation") is ConocoPhillips Company."

3. Phillips' Restated Certificate of Incorporation is hereby amended by deleting Section 1 of Article IV thereof and replacing in lieu thereof a new Section 1 reading in its entirety as follows:

"Section 1. The Corporation shall be authorized to issue 2,100 shares of capital stock, of which 2,100 shares shall be shares of Common Stock, $.01 par value ("Common Stock")."

4. Pursuant to Section 103(d) of the DGCL, this amendment will become effective at 11:00 p.m., Eastern time, on December 31, 2002.

RECEIVED
JAN 0 8 2003
DIV. OF OIL, GAS & MINING

IN WITNESS WHEREOF, Phillips has caused this certificate to be executed this 12th day of December, 2002.

PHILLIPS PETROLEUM COMPANY

By: _____
Name: Rick A. Harrington
Title: Senior Vice President, Legal, and General Counsel

HOU03:884504.1

RECEIVED
JAN 0 8 2003
DIV. OF OIL, GAS & MINING

Delaware

The First State

I, HARRIET SMITH WINDSOR, SECRETARY OF STATE OF THE STATE OF DELAWARE, DO HEREBY CERTIFY THE ATTACHED IS A TRUE AND CORRECT COPY OF THE CERTIFICATE OF MERGER, WHICH MERGES:

"CONOCO INC.", A DELAWARE CORPORATION,

WITH AND INTO "CONOCOPHILLIPS COMPANY" UNDER THE NAME OF "CONOCOPHILLIPS COMPANY", A CORPORATION ORGANIZED AND EXISTING UNDER THE LAWS OF THE STATE OF DELAWARE, AS RECEIVED AND FILED IN THIS OFFICE THE TWELFTH DAY OF DECEMBER, A.D. 2002, AT 1:44 O'CLOCK P.M.

AND I DO HEREBY FURTHER CERTIFY THAT THE EFFECTIVE DATE OF THE AFORESAID CERTIFICATE OF MERGER IS THE THIRTY-FIRST DAY OF DECEMBER, A.D. 2002, AT 11:59 O'CLOCK P.M.

RECEIVED
JAN 0 8 2003
DIV. OF OIL, GAS & MINING

Harriet Smith Windsor

Harriet Smith Windsor, Secretary of State

0064324 8100M

AUTHENTICATION: 2183370

030002793

DATE: 01-02-03

STATE OF DELAWARE
SECRETARY OF STATE
DIVISION OF CORPORATIONS
FILED 01:44 PM 12/12/2002
020763253 - 0064324

CERTIFICATE OF MERGER

of

Conoco Inc.
(a Delaware corporation)

with and into

ConocoPhillips Company
(a Delaware corporation)

Phillips Petroleum Company, a Delaware corporation to be renamed ConocoPhillips Company prior to the effective time of this certificate of merger (the "Surviving Corporation"), in compliance with the requirements of the General Corporation Law of the State of Delaware (the "DGCL") and desiring to effect a merger of Conoco Inc., a Delaware corporation formerly incorporated under the name Du Pont Holdings, Inc. (the "Merging Corporation," and together with the Surviving Corporation, the "Constituent Corporations"), with and into the Surviving Corporation, and acting by its duly authorized officer, DOES HEREBY CERTIFY that:

First: As of the date hereof, the name and state of incorporation of each of the Constituent Corporations of the merger are as follows:

NAME	STATE OF INCORPORATION
PHILLIPS PETROLEUM COMPANY	Delaware
CONOCO INC.	Delaware

Second: An agreement and plan of merger has been approved, adopted, certified, executed and acknowledged by each of the Constituent Corporations in accordance with the requirements of Section 251 of the DGCL;

Third: The name of the Surviving Corporation will be ConocoPhillips Company;

Fourth: The Certificate of Incorporation of ConocoPhillips Company immediately prior to the merger shall be the Certificate of Incorporation of the Surviving Corporation until such time as it may be amended in accordance with applicable law and the provisions thereof;

Fifth: The executed agreement and plan of merger is on file at an office of the Surviving Corporation, the address of which is 600 North Dairy Ashford, Houston, Texas 77079;

RECEIVED
JAN 0 8 2003
DIV. OF OIL, GAS & MINING

Sixth: A copy of the agreement and plan of merger will be furnished by the Surviving Corporation, on request and without cost, to any stockholder of any Constituent Corporation; and

Seventh: Pursuant to Section 103(d) of the DGCL, this certificate of merger will become effective at 11:59 p.m., Eastern time, on December 31, 2002.

Dated: December 12, 2002

PHILLIPS PETROLEUM COMPANY
(a Delaware corporation)

By: _____
Name: Rick A. Harrington
Title: Senior Vice President, Legal, and General Counsel

RECEIVED
JAN 0 8 2003
DIV. OF OIL, GAS & MINING

STATE OF UTAH
DEPARTMENT OF COMMERCE
REGISTRATION

CONOCOPHILLIPS COMPANY

EFFECTIVE 06/14/1946

EXPIRATION *RENEWAL

REFERENCE NUMBER(S), CLASSIFICATION(S) & DETAIL(S)

Corporation - Foreign - Profit
562960-0143

UNITED STATES CORP CO
CONOCOPHILLIPS COMPANY
GATEWAY TOWER EAST STE 900
10 EAST SOUTH TEMPLE
SLC UT 84133

RECEIVED
JAN 08 2003
DIV. OF OIL, GAS & MINING

STATE OF UTAH
DEPARTMENT OF COMMERCE
DIVISION OF CORPORATIONS & COMMERCIAL CODE

REGISTRATION

EFFECTIVE DATE: 06/14/1946

EXPIRATION DATE: *RENEWAL

ISSUED TO: CONOCOPHILLIPS COMPANY

THE GREAT SEAL OF THE STATE OF UTAH
INDUSTRY
1847
1896

REFERENCE NUMBER(S), CLASSIFICATION(S) & DETAIL(S)
562960-0143 Corporation - Foreign - Profit
*RENEWAL
You will need to renew your registration each anniversary date of the effective date.
Exceptions: DBAs and Business Trusts renew every three (3) years from the effective date.

Utah Well List as of 12/26/02

API Well Number	Well Name	Well Type	Well Status	Sec	Twpn	Twpd	Rngn	Rngd
43-007-30887-00-00	ANDREEN 32-529	Gas Well	APD	32	14	S	10	E
43-007-30865-00-00	COTNER 29-549	Gas Well	APD	29	14	S	10	E
43-007-30837-00-00	DALLIN 32-615	Gas Well	APD	32	13	S	9	E
43-047-34551-00-00	FED 43-24-3 #1	Gas Well	APD	24	10	S	17	E
43-047-33982-00-00	FEDERAL 12-17 #1	Gas Well	APD	17	10	S	18	E
43-047-34471-00-00	FEDERAL 12-29-7 1	Gas Well	APD	29	9	S	19	E
43-047-34472-00-00	FEDERAL 31-31-6 1	Gas Well	APD	31	9	S	19	E
43-007-30864-00-00	MCKENDRICK 29-548	Gas Well	APD	29	14	S	10	E
43-015-30512-00-00	PPCO 19-379	Gas Well	APD	19	16	S	9	E
43-015-30515-00-00	PPCO 24-562	Gas Well	APD	24	16	S	8	E
43-015-30548-00-00	PPCO 30-605	Gas Well	APD	30	16	S	9	E
43-007-30888-00-00	PRICE 32-438	Gas Well	APD	32	14	S	10	E
43-007-30813-00-00	RITZAKIS 33-514	Gas Well	APD	33	13	S	9	E
43-007-30766-00-00	RITZAKIS 33-516	Gas Well	APD	33	13	S	9	E
43-007-30838-00-00	ROWLEY 32-616	Gas Well	APD	32	13	S	9	E
43-007-30863-00-00	SCHMIDT 29-531	Gas Well	APD	29	14	S	10	E
43-007-30797-00-00	SEELY 15-498	Gas Well	APD	15	14	S	8	E
43-007-30798-00-00	SEELY 15-499	Gas Well	APD	15	14	S	8	E
43-007-30799-00-00	SEELY 15-500	Gas Well	APD	15	14	S	8	E
43-007-30796-00-00	SEELY 22-492	Gas Well	APD	22	14	S	8	E
43-007-30801-00-00	SEELY 22-502	Gas Well	APD	22	14	S	8	E
43-007-30802-00-00	SEELY 22-503	Gas Well	APD	22	14	S	8	E
43-007-30711-00-00	USA 09-452	Gas Well	APD	9	15	S	8	E
43-015-30351-00-00	USA 11-313	Gas Well	APD	11	16	S	9	E
43-015-30398-00-00	USA 12-385	Gas Well	APD	12	16	S	9	E
43-015-30409-00-00	USA 12-426	Gas Well	APD	12	16	S	9	E
43-007-30805-00-00	USA 14-490	Gas Well	APD	14	14	S	8	E
43-007-30806-00-00	USA 14-491	Gas Well	APD	14	14	S	8	E
43-007-30676-00-00	USA 15-421	Gas Well	APD	15	15	S	8	E
43-015-30417-00-00	USA 21-427	Gas Well	APD	21	16	S	9	E
43-015-30416-00-00	USA 21-428	Gas Well	APD	21	16	S	9	E
43-015-30415-00-00	USA 21-429	Gas Well	APD	21	16	S	9	E
43-007-30515-00-00	USA 31-309	Gas Well	APD	31	15	S	10	E
43-007-30835-00-00	USA 33-515	Gas Well	APD	33	13	S	9	E
43-007-30836-00-00	USA 33-624	Gas Well	APD	33	13	S	9	E
43-007-30803-00-00	USA 34-518	Gas Well	APD	34	14	S	8	E
43-007-30478-00-00	UTAH 05-224	Gas Well	APD	5	15	S	9	E
43-015-30411-00-00	UTAH 16-365	Gas Well	APD	16	16	S	9	E
43-015-30412-00-00	UTAH 16-366	Gas Well	APD	16	16	S	9	E
43-015-30413-00-00	UTAH 16-430	Gas Well	APD	16	16	S	9	E
43-015-30299-00-00	UTAH 18-374	Gas Well	APD	18	16	S	9	E
43-015-30420-00-00	UTAH 19-377	Gas Well	APD	19	16	S	9	E
43-015-30492-00-00	UTAH 19-378	Gas Well	APD	19	16	S	9	E
43-007-30891-00-00	UTAH 19-533	Gas Well	APD	19	14	S	10	E
43-015-30414-00-00	UTAH 20-381	Gas Well	APD	20	16	S	9	E
43-015-30421-00-00	UTAH 20-382	Gas Well	APD	20	16	S	9	E
43-015-30518-00-00	UTAH 25-576	Gas Well	APD	25	16	S	8	E
43-015-30539-00-00	UTAH 25-578	Gas Well	APD	25	16	S	8	E
43-015-30540-00-00	UTAH 25-579	Gas Well	APD	25	16	S	8	E
43-007-30817-00-00	UTAH 25-618	Gas Well	APD	25	13	S	9	E
43-015-30543-00-00	UTAH 26-582	Gas Well	APD	26	16	S	8	E
43-015-30547-00-00	UTAH 29-608	Gas Well	APD	29	16	S	9	E
43-007-30889-00-00	UTAH 32-128	Gas Well	APD	32	14	S	10	E
43-007-30814-00-00	UTAH 35-506	Gas Well	APD	35	13	S	9	E

Utah Well List as of 12/26/02

API Well Number	Well Name	Well Type	Well Status	Sec	Twpn	Twpd	Rngn	Rngd
43-047-33750-00-00	FEDERAL 34-29	Gas Well	P	29	9	S	19	E
43-007-30782-00-00	GAROFOLA 26-482	Gas Well	P	26	15	S	8	E
43-007-30335-00-00	GIACOLETTO 11-113	Gas Well	P	11	14	S	9	E
43-007-30407-00-00	GIACOLETTO 13-120	Gas Well	P	13	14	S	9	E
43-007-30345-00-00	GIACOLETTO 14-121	Gas Well	P	14	14	S	9	E
43-007-30487-00-00	HELPER & ASSOC 07-307	Gas Well	P	7	15	S	9	E
43-007-30459-00-00	HELPER & ASSOC 18-236	Gas Well	P	18	15	S	9	E
43-007-30720-00-00	HELPER & ASSOC 18-308	Gas Well	P	18	15	S	9	E
43-007-30412-00-00	HELPER & ASSOC 8-232	Gas Well	P	8	15	S	9	E
43-007-30258-00-00	HELPER & ASSOCIATES 7-84	Gas Well	P	7	15	S	9	E
43-007-30588-00-00	JENSEN 16-132	Gas Well	P	16	15	S	10	E
43-007-30420-00-00	KAKATSIDES 31-197	Gas Well	P	31	14	S	9	E
43-007-30296-00-00	LDS 17-133	Gas Well	P	17	15	S	10	E
43-007-30323-00-00	PAAR 16-146	Gas Well	P	16	14	S	9	E
43-047-34286-00-00	PETES WASH 23-12 #1	Gas Well	P	12	10	S	17	E
43-007-30748-00-00	PIERUCCI 25-461	Gas Well	P	25	15	S	8	E
43-007-30749-00-00	PIERUCCI 25-462	Gas Well	P	25	15	S	8	E
43-007-30754-00-00	PIERUCCI 26-463	Gas Well	P	26	15	S	8	E
43-007-30755-00-00	PIERUCCI 26-464	Gas Well	P	26	15	S	8	E
43-007-30745-00-00	PIERUCCI 26-481	Gas Well	P	26	15	S	8	E
43-007-30117-00-00	PINNACLE PEAK 19-171	Gas Well	P	19	14	S	9	E
43-007-30845-00-00	PMC 10-526	Gas Well	P	10	15	S	8	E
43-007-30282-00-00	POWELL 19-104	Gas Well	P	19	15	S	10	E
43-007-30283-00-00	POWELL 19-105	Gas Well	P	19	15	S	10	E
43-007-30346-00-00	POWELL 30-173	Gas Well	P	30	15	S	10	E
43-015-30279-00-00	PPCO 10-557	Gas Well	P	10	16	S	8	E
43-015-30494-00-00	PPCO 15-555	Gas Well	P	15	16	S	8	E
43-007-30211-00-00	PRETTYMAN 10-15-34	Gas Well	P	10	14	S	9	E
43-007-30340-00-00	PRETTYMAN 11-114	Gas Well	P	11	14	S	9	E
43-007-30653-00-00	RGC 21-331	Gas Well	P	21	15	S	9	E
43-007-30743-00-00	RGC 21-332	Gas Well	P	21	15	S	9	E
43-007-30747-00-00	RGC 25-460	Gas Well	P	25	15	S	8	E
43-007-30559-00-00	RGC 28-318	Gas Well	P	28	15	S	9	E
43-007-30518-00-00	RGC 28-319	Gas Well	P	28	15	S	9	E
43-007-30509-00-00	RITZAKIS 03-408	Gas Well	P	3	14	S	9	E
43-007-30473-00-00	RITZAKIS 5-304	Gas Well	P	5	14	S	9	E
43-007-30474-00-00	RITZAKIS 5-305	Gas Well	P	5	14	S	9	E
43-007-30475-00-00	RITZAKIS 8-298	Gas Well	P	8	14	S	9	E
43-007-30479-00-00	RITZAKIS 8-299	Gas Well	P	8	14	S	9	E
43-007-30476-00-00	RITZAKIS 8-300	Gas Well	P	8	14	S	9	E
43-007-30374-00-00	ROBERTSON 32-127	Gas Well	P	32	14	S	10	E
43-007-30610-00-00	SAMPINOS 16-131	Gas Well	P	16	15	S	10	E
43-007-30723-00-00	SAMPINOS 16-454	Gas Well	P	16	15	S	10	E
43-007-30765-00-00	SAMPINOS 16-521	Gas Well	P	16	15	S	10	E
43-007-30800-00-00	SEELY 22-501	Gas Well	P	22	14	S	8	E
43-007-30130-00-00	ST OF UT 25-9-1	Gas Well	P	25	14	S	9	E
43-007-30142-00-00	ST OF UT 36-3-4	Gas Well	P	36	14	S	9	E
43-007-30116-00-00	STELLA-HAMAKER 10-174	Gas Well	P	10	15	S	8	E
43-007-30746-00-00	TABOR 23-468	Gas Well	P	23	15	S	8	E
43-007-30319-00-00	TELONIS 15-142	Gas Well	P	15	14	S	9	E
43-007-30322-00-00	TELONIS 16-145	Gas Well	P	16	14	S	9	E
43-007-30300-00-00	TELONIS 19-150	Gas Well	P	19	14	S	9	E
43-007-30299-00-00	TELONIS 19-151	Gas Well	P	19	14	S	9	E
43-007-30327-00-00	TELONIS 20-152	Gas Well	P	20	14	S	9	E

Utah Well List as of 12/26/02

API Well Number	Well Name	Well Type	Well Status	Sec	Twpn	Twpd	Rngn	Rngd
43-007-30631-00-00	USA 13-419	Gas Well	P	13	15	S	8	E
43-007-30707-00-00	USA 13-447	Gas Well	P	13	14	S	8	E
43-007-30706-00-00	USA 13-470	Gas Well	P	13	14	S	8	E
43-007-30789-00-00	USA 13-474	Gas Well	P	13	14	S	8	E
43-007-30790-00-00	USA 13-475	Gas Well	P	13	14	S	8	E
43-007-30568-00-00	USA 13-91	Gas Well	P	13	14	S	9	E
43-007-30404-00-00	USA 14-122	Gas Well	P	14	14	S	9	E
43-015-30418-00-00	USA 1-425	Gas Well	P	1	16	S	9	E
43-007-30579-00-00	USA 14-325	Gas Well	P	14	15	S	8	E
43-007-30634-00-00	USA 14-386	Gas Well	P	14	15	S	8	E
43-007-30646-00-00	USA 14-416	Gas Well	P	14	15	S	8	E
43-007-30647-00-00	USA 14-417	Gas Well	P	14	15	S	8	E
43-007-30791-00-00	USA 14-476	Gas Well	P	14	14	S	8	E
43-007-30792-00-00	USA 14-477	Gas Well	P	14	14	S	8	E
43-007-30529-00-00	USA 14-74	Gas Well	P	14	14	S	9	E
43-007-30263-00-00	USA 14-75	Gas Well	P	14	14	S	9	E
43-007-30450-00-00	USA 15-176	Gas Well	P	15	14	S	9	E
43-007-30423-00-00	USA 15-177	Gas Well	P	15	14	S	9	E
43-007-30690-00-00	USA 15-420	Gas Well	P	15	15	S	8	E
43-007-30691-00-00	USA 15-422	Gas Well	P	15	15	S	8	E
43-007-30264-00-00	USA 15-88	Gas Well	P	15	14	S	9	E
43-007-30422-00-00	USA 17-179	Gas Well	P	17	14	S	9	E
43-007-30622-00-00	USA 17-180A	Gas Well	P	17	14	S	9	E
43-007-30618-00-00	USA 18-181	Gas Well	P	18	14	S	9	E
43-007-30417-00-00	USA 18-182	Gas Well	P	18	14	S	9	E
43-007-30619-00-00	USA 18-435	Gas Well	P	18	14	S	9	E
43-007-30393-00-00	USA 19-222	Gas Well	P	19	15	S	10	E
43-007-30392-00-00	USA 19-73	Gas Well	P	19	15	S	10	E
43-007-30448-00-00	USA 20-287	Gas Well	P	20	15	S	10	E
43-007-30451-00-00	USA 20-288	Gas Well	P	20	15	S	10	E
43-007-30590-00-00	USA 20-398	Gas Well	P	20	15	S	10	E
43-007-30591-00-00	USA 20-399	Gas Well	P	20	15	S	10	E
43-007-30424-00-00	USA 21-184	Gas Well	P	21	14	S	9	E
43-007-30425-00-00	USA 21-35	Gas Well	P	21	14	S	9	E
43-007-30426-00-00	USA 22-185	Gas Well	P	22	14	S	9	E
43-007-30477-00-00	USA 22-186	Gas Well	P	22	14	S	9	E
43-007-30700-00-00	USA 22-466	Gas Well	P	22	15	S	8	E
43-007-30611-00-00	USA 23-423	Gas Well	P	23	14	S	8	E
43-007-30650-00-00	USA 23-445	Gas Well	P	23	15	S	8	E
43-007-30704-00-00	USA 23-451	Gas Well	P	23	15	S	8	E
43-007-30503-00-00	USA 23-467	Gas Well	P	23	15	S	8	E
43-007-30793-00-00	USA 23-478	Gas Well	P	23	14	S	8	E
43-007-30794-00-00	USA 23-479	Gas Well	P	23	14	S	8	E
43-007-30795-00-00	USA 23-480	Gas Well	P	23	14	S	8	E
43-007-30469-00-00	USA 24-183	Gas Well	P	24	14	S	8	E
43-007-30612-00-00	USA 24-387	Gas Well	P	24	14	S	8	E
43-007-30613-00-00	USA 24-388	Gas Well	P	24	14	S	8	E
43-007-30651-00-00	USA 24-443	Gas Well	P	24	15	S	8	E
43-007-30648-00-00	USA 24-444	Gas Well	P	24	15	S	8	E
43-007-30708-00-00	USA 24-446	Gas Well	P	24	14	S	8	E
43-007-30652-00-00	USA 24-448	Gas Well	P	24	15	S	8	E
43-007-30705-00-00	USA 24-449	Gas Well	P	24	15	S	8	E
43-007-30505-00-00	USA 25-459	Gas Well	P	25	15	S	8	E
43-007-30614-00-00	USA 26-393	Gas Well	P	26	14	S	8	E

Utah Well List as of 12/26/02

API Well Number	Well Name	Well Type	Well Status	Sec	Twpn	Twpd	Rngn	Rngd
43-007-30430-00-00	UTAH 06-223	Gas Well	P	6	15	S	9	E
43-007-30562-00-00	UTAH 06-330	Gas Well	P	6	15	S	9	E
43-007-30716-00-00	UTAH 06-483	Gas Well	P	6	15	S	9	E
43-007-30409-00-00	UTAH 07-234	Gas Well	P	7	15	S	9	E
43-007-30421-00-00	UTAH 07-235	Gas Well	P	7	15	S	9	E
43-007-30411-00-00	UTAH 08-231	Gas Well	P	8	15	S	9	E
43-007-30488-00-00	UTAH 08-233	Gas Well	P	8	15	S	9	E
43-015-30464-00-00	UTAH 08-354	Gas Well	P	8	16	S	9	E
43-015-30378-00-00	UTAH 08-355	Gas Well	P	8	16	S	9	E
43-015-30379-00-00	UTAH 08-356	Gas Well	P	8	16	S	9	E
43-015-30380-00-00	UTAH 08-357	Gas Well	P	8	16	S	9	E
43-007-30449-00-00	UTAH 09-227	Gas Well	P	9	15	S	9	E
43-007-30561-00-00	UTAH 09-329	Gas Well	P	9	15	S	9	E
43-015-30300-00-00	UTAH 09-358	Gas Well	P	9	16	S	9	E
43-015-30407-00-00	UTAH 09-359	Gas Well	P	9	16	S	9	E
43-015-30397-00-00	UTAH 09-360	Gas Well	P	9	16	S	9	E
43-015-30408-00-00	UTAH 09-361	Gas Well	P	9	16	S	9	E
43-007-30580-00-00	UTAH 09-412	Gas Well	P	9	15	S	10	E
43-007-30605-00-00	UTAH 09-413	Gas Well	P	9	15	S	10	E
43-007-30657-00-00	UTAH 09-450	Gas Well	P	9	15	S	10	E
43-007-30722-00-00	UTAH 09-453	Gas Well	P	9	15	S	10	E
43-007-30302-00-00	UTAH 10-01-36	Gas Well	P	10	15	S	9	E
43-007-30298-00-00	UTAH 10-219	Gas Well	P	10	15	S	9	E
43-007-30432-00-00	UTAH 10-220	Gas Well	P	10	15	S	9	E
43-007-30303-00-00	UTAH 10-221	Gas Well	P	10	15	S	9	E
43-007-30228-00-00	UTAH 11-50	Gas Well	P	11	15	S	9	E
43-007-30229-00-00	UTAH 11-51	Gas Well	P	11	15	S	9	E
43-007-30230-00-00	UTAH 11-52	Gas Well	P	11	15	S	9	E
43-007-30231-00-00	UTAH 11-53	Gas Well	P	11	15	S	9	E
43-007-30467-00-00	UTAH 1-209	Gas Well	P	1	15	S	8	E
43-007-30210-00-00	UTAH 12-15-37	Gas Well	P	12	15	S	9	E
43-007-30232-00-00	UTAH 12-54	Gas Well	P	12	15	S	9	E
43-007-30233-00-00	UTAH 12-55	Gas Well	P	12	15	S	9	E
43-007-30234-00-00	UTAH 12-56	Gas Well	P	12	15	S	9	E
43-015-30493-00-00	UTAH 13-376	Gas Well	P	13	16	S	8	E
43-015-30301-00-00	UTAH 13-550	Gas Well	P	13	16	S	8	E
43-007-30243-00-00	UTAH 13-65	Gas Well	P	13	15	S	9	E
43-007-30244-00-00	UTAH 13-66	Gas Well	P	13	15	S	9	E
43-007-30245-00-00	UTAH 13-67	Gas Well	P	13	15	S	9	E
43-007-30246-00-00	UTAH 13-68	Gas Well	P	13	15	S	9	E
43-007-30439-00-00	UTAH 13-92	Gas Well	P	13	14	S	9	E
43-007-30220-00-00	UTAH 1-42	Gas Well	P	1	15	S	9	E
43-007-30221-00-00	UTAH 1-43	Gas Well	P	1	15	S	9	E
43-007-30222-00-00	UTAH 1-44	Gas Well	P	1	15	S	9	E
43-007-30223-00-00	UTAH 1-45	Gas Well	P	1	15	S	9	E
43-015-30330-00-00	UTAH 14-551	Gas Well	P	14	16	S	8	E
43-015-30331-00-00	UTAH 14-552	Gas Well	P	14	16	S	8	E
43-007-30239-00-00	UTAH 14-61	Gas Well	P	14	15	S	9	E
43-007-30240-00-00	UTAH 14-62	Gas Well	P	14	15	S	9	E
43-007-30241-00-00	UTAH 14-63	Gas Well	P	14	15	S	9	E
43-007-30242-00-00	UTAH 14-64	Gas Well	P	14	15	S	9	E
43-015-30334-00-00	UTAH 15-553	Gas Well	P	15	16	S	8	E
43-007-30416-00-00	UTAH 17-101	Gas Well	P	17	15	S	10	E
43-007-30277-00-00	UTAH 17-102	Gas Well	P	17	15	S	10	E

Utah Well List as of 12/26/02

API Well Number	Well Name	Well Type	Well Status	Sec	Twpn	Twpd	Rngn	Rngd
43-007-30255-00-00	UTAH 24-80	Gas Well	P	24	15	S	9	E
43-007-30256-00-00	UTAH 24-81	Gas Well	P	24	15	S	9	E
43-007-30267-00-00	UTAH 24-86	Gas Well	P	24	15	S	9	E
43-007-30375-00-00	UTAH 24-87	Gas Well	P	24	15	S	9	E
43-007-30227-00-00	UTAH 2-49	Gas Well	P	2	15	S	9	E
43-007-30157-00-00	UTAH 25-11-7	Gas Well	P	25	14	S	9	E
43-007-30399-00-00	UTAH 25-134	Gas Well	P	25	15	S	9	E
43-007-30400-00-00	UTAH 25-252	Gas Well	P	25	15	S	9	E
43-007-30401-00-00	UTAH 25-253	Gas Well	P	25	15	S	9	E
43-007-30402-00-00	UTAH 25-254	Gas Well	P	25	15	S	9	E
43-007-30600-00-00	UTAH 25-389	Gas Well	P	25	14	S	8	E
43-007-30599-00-00	UTAH 25-390	Gas Well	P	25	14	S	8	E
43-007-30658-00-00	UTAH 25-391	Gas Well	P	25	14	S	8	E
43-007-30602-00-00	UTAH 25-392	Gas Well	P	25	14	S	8	E
43-007-30206-00-00	UTAH 25-4-33	Gas Well	P	25	14	S	9	E
43-015-30519-00-00	UTAH 25-577	Gas Well	P	25	16	S	8	E
43-007-30156-00-00	UTAH 25-7-6	Gas Well	P	25	14	S	9	E
43-007-30204-00-00	UTAH 26-11-25	Gas Well	P	26	14	S	9	E
43-007-30205-00-00	UTAH 26-1-23	Gas Well	P	26	14	S	9	E
43-007-30181-00-00	UTAH 26-16-8	Gas Well	P	26	14	S	9	E
43-007-30446-00-00	UTAH 26-255	Gas Well	P	26	15	S	9	E
43-007-30445-00-00	UTAH 26-256	Gas Well	P	26	15	S	9	E
43-007-30444-00-00	UTAH 26-257	Gas Well	P	26	15	S	9	E
43-007-30514-00-00	UTAH 26-267	Gas Well	P	26	15	S	9	E
43-015-30541-00-00	UTAH 26-580	Gas Well	P	26	16	S	8	E
43-015-30542-00-00	UTAH 26-581	Gas Well	P	26	16	S	8	E
43-015-30544-00-00	UTAH 26-583	Gas Well	P	26	16	S	8	E
43-007-30202-00-00	UTAH 26-6-24	Gas Well	P	26	14	S	9	E
43-007-30395-00-00	UTAH 27-187	Gas Well	P	27	14	S	9	E
43-007-30292-00-00	UTAH 27-188	Gas Well	P	27	14	S	9	E
43-007-30457-00-00	UTAH 27-268	Gas Well	P	27	15	S	9	E
43-007-30458-00-00	UTAH 27-269	Gas Well	P	27	15	S	9	E
43-007-30712-00-00	UTAH 27-457	Gas Well	P	27	14	S	8	E
43-007-30714-00-00	UTAH 27-458	Gas Well	P	27	14	S	8	E
43-007-30777-00-00	UTAH 27-520	Gas Well	P	27	14	S	8	E
43-015-30545-00-00	UTAH 27-584	Gas Well	P	27	16	S	8	E
43-007-30193-00-00	UTAH 27-8-29	Gas Well	P	27	14	S	9	E
43-007-30186-00-00	UTAH 27-9-30	Gas Well	P	27	14	S	9	E
43-007-30396-00-00	UTAH 28-189	Gas Well	P	28	14	S	9	E
43-007-30397-00-00	UTAH 28-190	Gas Well	P	28	14	S	9	E
43-007-30293-00-00	UTAH 28-191	Gas Well	P	28	14	S	9	E
43-007-30294-00-00	UTAH 28-192	Gas Well	P	28	14	S	9	E
43-007-30551-00-00	UTAH 28-320	Gas Well	P	28	15	S	9	E
43-007-30560-00-00	UTAH 28-321	Gas Well	P	28	15	S	9	E
43-007-30405-00-00	UTAH 29-193	Gas Well	P	29	14	S	9	E
43-007-30427-00-00	UTAH 29-194	Gas Well	P	29	14	S	9	E
43-007-30739-00-00	UTAH 29-339	Gas Well	P	29	15	S	9	E
43-007-30740-00-00	UTAH 29-340	Gas Well	P	29	15	S	9	E
43-007-30741-00-00	UTAH 29-341	Gas Well	P	29	15	S	9	E
43-007-30742-00-00	UTAH 29-342	Gas Well	P	29	15	S	9	E
43-007-30262-00-00	UTAH 30-125	Gas Well	P	30	14	S	10	E
43-007-30185-00-00	UTAH 30-13-14	Gas Well	P	30	14	S	10	E
43-007-30265-00-00	UTAH 30-195	Gas Well	P	30	14	S	9	E
43-007-30344-00-00	UTAH 30-196	Gas Well	P	30	14	S	9	E

Utah Well List as of 12/26/02

API Well Number	Well Name	Well Type	Well Status	Sec	Twpn	Twpd	Rngn	Rngd
43-007-30178-00-00	UTAH 36-1-2	Gas Well	P	36	14	S	9	E
43-007-30341-00-00	UTAH 36-135	Gas Well	P	36	15	S	9	E
43-007-30343-00-00	UTAH 36-136	Gas Well	P	36	15	S	9	E
43-007-30342-00-00	UTAH 36-137	Gas Well	P	36	15	S	9	E
43-007-30315-00-00	UTAH 36-162	Gas Well	P	36	14	S	8	E
43-007-30316-00-00	UTAH 36-163	Gas Well	P	36	14	S	8	E
43-007-30317-00-00	UTAH 36-164	Gas Well	P	36	14	S	8	E
43-007-30318-00-00	UTAH 36-165	Gas Well	P	36	14	S	8	E
43-007-30144-00-00	UTAH 36-9-5	Gas Well	P	36	14	S	9	E
43-015-30341-00-00	UTAH 4-280	Gas Well	P	4	16	S	9	E
43-015-30342-00-00	UTAH 4-282	Gas Well	P	4	16	S	9	E
43-007-30384-00-00	UTAH 5-205	Gas Well	P	5	15	S	9	E
43-007-30269-00-00	UTAH 5-94	Gas Well	P	5	15	S	10	E
43-007-30270-00-00	UTAH 5-95	Gas Well	P	5	15	S	10	E
43-007-30271-00-00	UTAH 5-96	Gas Well	P	5	15	S	10	E
43-007-30217-00-00	UTAH 6-38	Gas Well	P	6	15	S	10	E
43-007-30218-00-00	UTAH 6-39	Gas Well	P	6	15	S	10	E
43-007-30219-00-00	UTAH 6-40	Gas Well	P	6	15	S	10	E
43-007-30254-00-00	UTAH 6-41	Gas Well	P	6	15	S	10	E
43-007-30235-00-00	UTAH 7-57	Gas Well	P	7	15	S	10	E
43-007-30236-00-00	UTAH 7-58	Gas Well	P	7	15	S	10	E
43-007-30237-00-00	UTAH 7-59	Gas Well	P	7	15	S	10	E
43-007-30238-00-00	UTAH 7-60	Gas Well	P	7	15	S	10	E
43-007-30275-00-00	UTAH 8-100	Gas Well	P	8	15	S	10	E
43-007-30410-00-00	UTAH 8-230	Gas Well	P	8	15	S	9	E
43-007-30272-00-00	UTAH 8-97	Gas Well	P	8	15	S	10	E
43-007-30285-00-00	UTAH 8-98X	Gas Well	P	8	15	S	10	E
43-007-30274-00-00	UTAH 8-99	Gas Well	P	8	15	S	10	E
43-007-30413-00-00	UTAH 9-228	Gas Well	P	9	15	S	9	E
43-007-30414-00-00	UTAH 9-229	Gas Well	P	9	15	S	9	E
43-007-30279-00-00	WILLIAMS 30-78	Gas Well	P	30	14	S	10	E
43-007-30481-00-00	WOOLSTENHULME 05-266	Gas Well	P	5	15	S	10	E
43-015-30250-00-00	UTAH 16-110	Gas Well	Shut_In	16	16	S	9	E

United States Department of the Interior

BUREAU OF LAND MANAGEMENT
Eastern States Office
7450 Boston Boulevard
Springfield, Virginia 22153

IN REPLY REFER TO
3106.8(932.34)WF

January 16, 2003

NOTICE

ConocoPhillips Company P.O. Box 7500 Bartlesville, Oklahoma 74005	: : :	Oil & Gas Leases

Merger/Name Change Recognized

Acceptable evidence was received in this office on January 14, 2003, concerning the change of name of Phillips Petroleum Company to **ConocoPhillips Company** and the merger of **Conoco Incorporated** into **ConocoPhillips Company** on Federal oil and gas leases, with **ConocoPhillips Company being the surviving entity.**

The Secretary of the State of Delaware certified the effective date of this merger effective December 31, 2002.

The oil and gas lease files identified on the enclosed exhibit have been noted to the merger. The exhibit was compiled from a list of leases obtained from your list of leases. Eastern States has not abstracted the lease files to determine if the entities affected by this merger hold an interest in the leases identified nor have we attempted to identify leases where the entities are the operator on the ground maintaining no vested record title or operating rights interest. We are notifying the Minerals Management Service and all applicable Bureau of Land Management offices of this merger and name change by a copy of this notice. If additional documentation for changes of operator are required by our Field Offices, you will be contacted by them.

If you identify other leases in which the merging entity maintain an interest, please contact this office and we will appropriately document those files with a copy of this Notice.

By Operation of law the name of the principal on Nationwide Oil and Gas Bond held by Conoco Incorporated (ES0085) has been changed to ConocoPhillips Company.

If you have any questions, please contact Bill Forbes at 703-440-1536.

S/ Wilbert B. Forbes

Wilbert B. Forbes
Land Law Examiner
Branch of Use Authorization
Division of Resources Planning, Use
and Protection

bc: JFO, BLM State Offices, MMS, ES RF, 930 RF, ES-932:
Bforbes:wbf:01/16/03:440-1536/ConocoPhillips Co

Division of Oil, Gas and Mining

OPERATOR CHANGE WORKSHEET

ROUTING
1. GLH
2. CDW ✓
3. FILE

Change of Operator (Well Sold) — Designation of Agent/Operator

Operator Name Change — X Merger

The operator of the well(s) listed below has changed, effective: **12-31-02**

FROM: (Old Operator):	**TO:** (New Operator):
PHILLIPS PETROLEUM COMPANY	CONOCOPHILLIPS COMPANY
Address: 980 PLAZA OFFICE	Address: P O BOX 2197, WL3 4066
BARTLESVILLE, OK 74004	HOUSTON, TX 77252
Phone: 1-(918)-661-4415	Phone: 1-(832)-486-2329
Account No. N1475	Account No. N2335

CA No. **Unit:** **DRUNKARDS WASH**

WELL(S)

NAME	SEC TWN RNG	API NO	ENTITY NO	LEASE TYPE	WELL TYPE	WELL STATUS
USA 26-424	26-14S-08E	43-007-30620	11256	FEDERAL	GW	P
UTAH 27-457	27-14S-08E	43-007-30712	11256	STATE	GW	P
UTAH 27-458	27-14S-08E	43-007-30714	11256	STATE	GW	P
UTAH 27-520	27-14S-08E	43-007-30777	11256	STATE	GW	P
UTAH 34-493	34-14S-08E	43-007-30778	11256	STATE	GW	P
USA 34-434	34-14S-08E	43-007-30621	11256	FEDERAL	GW	P
UTAH 34-456	34-14S-08E	43-007-30713	11256	STATE	GW	P
USA 35-248	35-14S-08E	43-007-30582	11256	FEDERAL	GW	P
USA 35-328	35-14S-08E	43-007-30583	11256	FEDERAL	GW	P
USA 35-396	35-14S-08E	43-007-30584	11256	FEDERAL	GW	P
USA 35-397	35-14S-08E	43-007-30585	11256	FEDERAL	GW	P
UTAH 36-162	36-14S-08E	43-007-30315	11256	STATE	GW	P
UTAH 36-163	36-14S-08E	43-007-30316	11256	STATE	GW	P
UTAH 36-164	36-14S-08E	43-007-30317	11256	STATE	GW	P
UTAH 36-165	36-14S-08E	43-007-30318	11256	STATE	GW	P
UTAH 02-406	02-14S-09E	43-007-30606	11256	STATE	GW	P
UTAH 02-405	02-14S-09E	43-007-30607	11256	STATE	GW	P
UTAH 02-404	02-14S-09E	43-007-30608	11256	STATE	GW	P
UTAH 02-403	02-14S-09E	43-007-30609	11256	STATE	GW	P
RITZAKIS 03-408	03-14S-09E	43-007-30509	11256	FEE	GW	P

OPERATOR CHANGES DOCUMENTATION

Enter date after each listed item is completed

1. (R649-8-10) Sundry or legal documentation was received from the **FORMER** operator on: 01/08/2003
2. (R649-8-10) Sundry or legal documentation was received from the **NEW** operator on: 01/08/2003
3. The new company has been checked through the **Department of Commerce, Division of Corporations Database on:** 02/03/2003
4. Is the new operator registered in the State of Utah: YES Business Number: 562960-0143
5. If **NO**, the operator was contacted contacted on: _____

6. (R649-9-2)Waste Management Plan has been received on: IN PLACE

7. **Federal and Indian Lease Wells:** The BLM and or the BIA has approved the merger, name change, or operator change for all wells listed on Federal or Indian leases on: 01/14/2003

8. **Federal and Indian Units:**
The BLM or BIA has approved the successor of unit operator for wells listed on: 01/14/2003

9. **Federal and Indian Communization Agreements ("CA"):**
The BLM or BIA has approved the operator for all wells listed within a CA on: 01/14/2003

10. **Underground Injection Control ("UIC")** The Division has approved UIC Form 5, **Transfer of Authority to Inject,** for the enhanced/secondary recovery unit/project for the water disposal well(s) listed on: N/A

DATA ENTRY:

1. Changes entered in the **Oil and Gas Database on:** 02/06/2003
2. Changes have been entered on the **Monthly Operator Change Spread Sheet on:** 02/06/2003
3. Bond information entered in RBDMS on: N/A
4. Fee wells attached to bond in RBDMS on: N/A

STATE WELL(S) BOND VERIFICATION:

1. State well(s) covered by Bond Number: 8140-60-24

FEDERAL WELL(S) BOND VERIFICATION:

1. Federal well(s) covered by Bond Number: 8015-16-69

INDIAN WELL(S) BOND VERIFICATION:

1. Indian well(s) covered by Bond Number: N/A

FEE WELL(S) BOND VERIFICATION:

1. (R649-3-1) The **NEW** operator of any fee well(s) listed covered by Bond Number 6196922
2. The **FORMER** operator has requested a release of liability from their bond on: N/A
The Division sent response by letter on: N/A

LEASE INTEREST OWNER NOTIFICATION:

3. (R649-2-10) The **FORMER** operator of the fee wells has been contacted and informed by a letter from the Division of their responsibility to notify all interest owners of this change on: N/A

COMMENTS: