FORM 3

STATE OF UTAH

DIVISION OF OIL, GAS AND MINING

5. Lease Designation and Serial Number: ML-44443

APPLICATION FOR PERMIT TO DRILL OR DEEPEN

6. If Indian, Allottee or Tribe Name: N/A

7. Unit Agreement Name: N/A

1A. Type of Work: DRILL ☒ DEEPEN ☐

B. Type of Well: OIL ☐ GAS ☒ OTHER: SINGLE ZONE ☐ MULTIPLE ZONE ☒

8. Farm or Lease Name: HUBER-STATE

2. Name of Operator: J. M. HUBER CORPORATION (303) 825-7900

9. Well Number: 1-16

3. Address and Telephone Number: 1050 17TH ST., SUITE 1850, DENVER, CO. 80265

10. Field and Pool, or Wildcat: CASTLE GATE

4. Location of Well (Footages)
At Surface: 820' FNL & 2163' FEL 516.69WE 4404.25N
At Proposed Producing Zone: SAME

11. Qtr/Qtr, Section, Township, Range, Meridian: NWNE 16-12S-10E

14. Distance in miles and direction from nearest town or post office: 8 AIR MILES NNE OF HELPER

12. County: CARBON

13. State: UTAH

15. Distance to nearest property or lease line (feet): 820'

16. Number of acres in lease: 640

17. Number of acres assigned to this well: 160

18. Distance to nearest well, drilling, completed, or applied for, on this lease (feet): N/A

19. Proposed Depth: 5,000'

20. Rotary or cable tools: ROTARY

21. Elevations (show whether DF, RT, GR, etc.): 7,580' UNGRADED

22. Approximate date work will start: JULY 30, 1999

23. PROPOSED CASING AND CEMENTING PROGRAM

SIZE OF HOLE	GRADE, SIZE OF CASING	WEIGHT PER FOOT	SETTING DEPTH	QUANTITY OF CEMENT
12-1/4"	8-5/8" J-55	24#	500'	375 SX PREMIUM
7-7/8"	5-1/2" J-55	17#	5,000'	700 SX 50-50 POZ (DV @ 3,300')

DESCRIBE PROPOSED PROGRAM: If proposal is to deepen, give data on present productive zone and proposed new productive zone. If proposal is to drill or deepen directionally, give pertinent subsurface locations and measured and true vertical depths. Give blowout preventer program, if any.

RECEIVED JUL 20 1999 DIV. OF OIL, GAS & MINING

24. Name & Signature: Brian Wood (505) 466-8120 Title: CONSULTANT Date: 7-19-99

(This space for State use only)

API Number Assigned: 43-007-30589

Approval: Approved by the Utah Division of Oil, Gas and Mining Date: 7/29/99 By: [illegible]

(See Instructions on Reverse Side)

1\93)

Well Location Plat

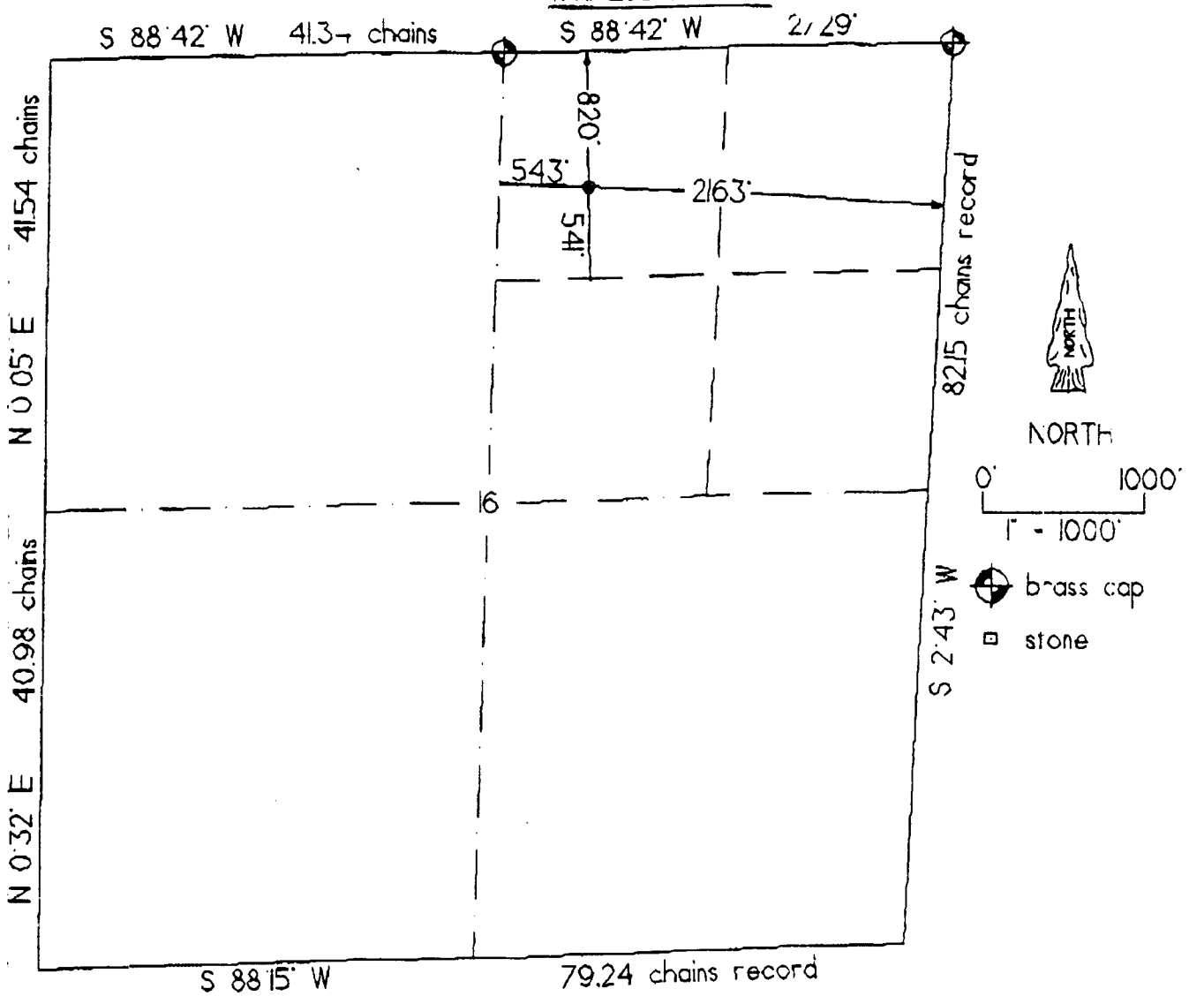

Well Location Description

J.M. Huber Corporation
Huber State 1 - 16
820' FNL & 2163' FEL
Section 16. T.12 S.. R.10 E.. SLM
Carbon County. UT
7580' grd. el. (from GPS)

REGISTERED LAND SURVEYOR
GERALD G. HUDDLESTON
No. 161297
STATE OF UTAH

12 July 1999

Gerald G. Huddleston. LS

The above is true and correct to my knowledge and belief.

HUDDLESTON LAND SURVEYING - BOX KK - CORTEZ. CO - (970) 565 -3330

NOTE: CENTER STAKE IS MARKED WITH GREEN STEEL FENCE POST

J. M. Huber Corporation
Huber-State 1-16
820' FNL & 2163' FEL
Sec. 16, T. 12 S., R. 10 E.
Carbon County, Utah

Drilling Program

1.

Formation Name	Depth from GL	Depth from KB	Subsea Depth
Flagstaff Ls	0'	12'	+7,580'
North Horn Fm	100'	112'	+7,480'
Price River Ss	2,875'	2,887'	+4,705'
Castle Gate Ss	3,300'	3,312'	+4,280'
Blackhawk Coal	3,590'	3,602'	+3,990'
Kenilworth Ss	4,320'	4,332'	+3,260'
Aberdeen Ss	4,500'	4,512'	+3,080'
Spring Canyon Ss	4,640'	4,652'	+2,940'
Mancos Sh	4,900'	4,912'	+2,680'
Total Depth	5,000'	5,012'	+2,580'

(All depths are based on an ungraded ground level of 7,580'.)

2. NOTABLE ZONES

Blackhawk coal is the primary goal. Kenilworth is a secondary goal. No other oil or gas zones are expected. Flagstaff, North Horn, and Blackhawk are anticipated water zones.

3. PRESSURE CONTROL (Also see "5." on PAGE 2)

A ≈10" x 2,000 psi double ram BOP with 2,000 psi choke manifold will be used from bottom of surface casing to TD. (A typical 2,000 psi BOP is on Page 4. Actual model will not be known until the bid is let.) BOP system will be tested to 70% of the minimum internal yield before drilling the surface casing shoe. System will be tested at least once every 30 days. Tests will be recorded in the driller's log. BOPs will be inspected and operated daily to assure good mechanical working order.

J. M. Huber Corporation
Huber-State 1-16
820' FNL & 2163' FEL
Sec. 16, T. 12 S., R. 10 E.
Carbon County, Utah

4. CASING & CEMENTING

Hole Size	O.D.	Weight	Grade	Type	Age	≈Setting Depth
12-1/4"	8-5/8"	24	J-55	ST&C	New	500'
7-7/8"	5-1/2"	17	J-55	LT&C	New	5,000'

Surface casing will be circulated to surface with ≈375 sx Premium cement. Long string will be cemented with DV tool set at ≈3,300'. Will use ≈700 sx 50-50 poz with additives. Actual volumes will be determined by caliper log.

5. MUD PROGRAM

Fresh water gel (weight = 8.3 to 8.7 ppg, viscosity = 40-55, fluid loss = NC) will be used from surface to ≈500. Fresh water gel with caustic (weight = 8.7 to 9.1 ppg, viscosity = 38-45, fluid loss = 10-20 cc) will be used from surface casing shoe to TD. May also drill with air.

6. CORING, TESTING, & LOGGING

Will probably core well. May run Dual Induction Guard and Spectral Density/Dual Spaced Neutron logs.

7. MISCELLANEOUS

Projected spud date is July 30, 1999. It will take ≈2 weeks to drill the well and ≈3 weeks to complete the well. Maximum anticipated bottom hole pressure is ≈2,000 psi. No abnormal pressures, temperatures, or hydrogen sulfide are expected.

Pressure Control Equipment

Minimum 2" Choke Line.
Minimum 2" Kill Line.
At Least One 2" Minimum Kill Line Valve.

Note: 1. An upper Kelly cock valve will be utilized during drilling. Handle will be available for easy access.

2. Safety valves and necessary subs to fit all drill string in use will be available.

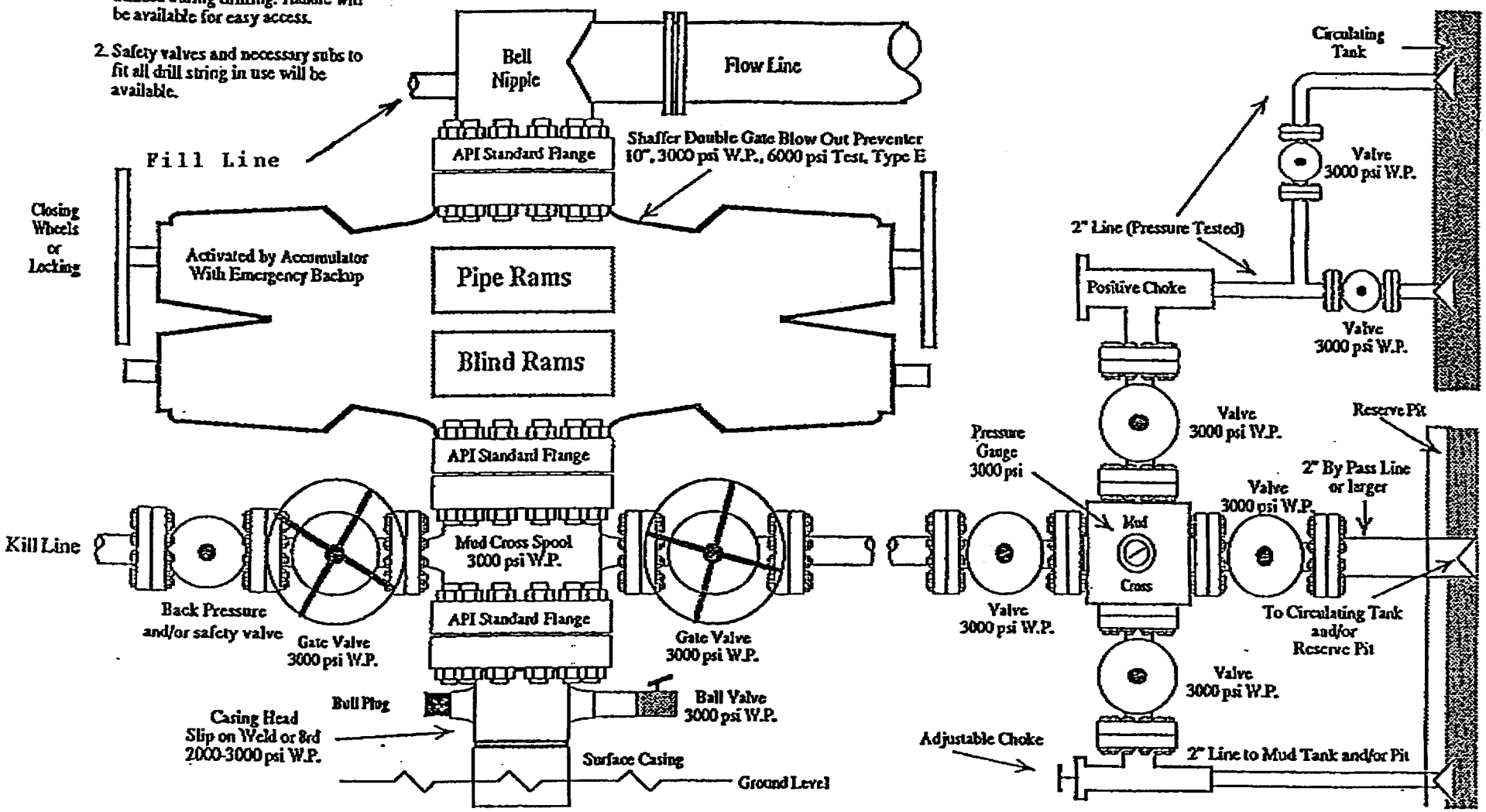

J. M. Huber Corporation
Huber-State 1-16
820' FNL & 2163' FEL
Sec. 16, T. 12 S., R. 10 E.
Carbon County, Utah

Surface Use Plan

1. EXISTING ROADS & DIRECTIONS (See PAGES 8 & 9)

From the junction of US 6 and US 191 north of Helper, Utah ...
Go NE 7.5 miles on US 191 to Milepost 165
Then turn left and go NW 0.25 miles on a paved road to a locked gate
Then turn left and follow a lightly graveled road SW for 1.5 miles
Then turn right at orange flagged bushes and follow orange flags N 400'
Then turn left onto a P&A well and go W 200' to the E side of the new well

2. ROAD TO BE BUILT OR UPGRADED

The existing road will be graded to remove ruts. The new road will be flat bladed with a 16' wide travel surface. If production results, then all of the road from the well to the pavement will be crowned, ditched, graveled, and culverted where needed. Travel surface will remain 16' and maximum disturbed width will not exceed 50'.

3. EXISTING WELLS

There are 8 P&A wells and 1 water well within a mile radius. There are no existing oil, gas, injection, or disposal wells within a mile.

4. PROPOSED PRODUCTION FACILITIES

Production equipment may include a dehydrator-separator, meter run, and pump. Produced fluids will be piped to an existing central production facility. Facilities will be painted a flat juniper green color.

J. M. Huber Corporation
Huber-State 1-16
820' FNL & 2163' FEL
Sec. 16, T. 12 S., R. 10 E.
Carbon County, Utah

5. WATER SUPPLY

Water will be trucked from existing water wells (right #91-4983) at Huber's central production facility in Section 11.

6. CONSTRUCTION MATERIALS & METHODS

Topsoil and brush will be stripped and stockpiled north and south of the pad. Diversion ditches will be built south of the pad and a berm north of the pad. Topsoil and brush along the new road will be windrowed beside the road. The reserve pit will be lined with minimum 12 mil plastic.

7. WASTE DISPOSAL

The reserve pit will be fenced 4' high on 3 sides with 4 strands of barbed wire or woven wire topped with barbed wire. The 4th side will be fenced once the rig moves off hole. The fence will be kept in good repair while the pit dries.

All trash will be placed in a trash cage. When full, it will be hauled to a state approved landfill. There will be no trash burning or disposal of trash in the reserve pit. Chemical toilets will be used for human waste. Their contents will be disposed of in state approved facilities.

No oil will be allowed on the reserve pit. Any oil which accumulates on the pit will be pumped or skimmed off and hauled to a state approved recycle facility. Once dry, the reserve pit contents will be buried in place. The pit will be backfilled sufficiently deep so that no liner is exposed.

Produced water will be piped to the central production facility in Section 11 or trucked to a state approved disposal site.

J. M. Huber Corporation
Huber-State 1-16
820' FNL & 2163' FEL
Sec. 16, T. 12 S., R. 10 E.
Carbon County, Utah

8. ANCILLARY FACILITIES

There will be no airstrip or formal camp. Camper trailers will be on site for the company man, roughnecks, mud logger, tool pusher, etc.

9. WELL SITE LAYOUT

See PAGES 10 & 11 for depictions of the well pad, cross sections, cut and fill diagrams, reserve pit, burn pit, access road onto the pad, parking, living facilities, and rig orientation.

10. RECLAMATION

After completing drilling, the well site and immediate area will be cleared of all debris and material not needed for production.

Reclamation will start when the reserve pit is dry. All areas not needed for production will be backfilled, recontoured to match natural contours, and reserved topsoil and brush evenly spread. If the well is a producer, then enough topsoil will be kept aside to reclaim the rest of the pad. Disturbed areas will be ripped, harrowed, or scarified before seeding. All reclaimed areas will be broadcast seeded in late fall or winter with seed mixes specified by the state. Seeded areas will be left rough and lightly harrowed or drug with a chain after seeding.

The road will be narrowed and water barred. Water bars will be built at least half in cut and skewed to drain.

11. SURFACE OWNER

The well site and last half mile of road are all on one lease on state land

managed by the Utah School and Institutional Trust Lands Administration. The remainder of the road is on land owned by the Jensen family. Contact is Jerry Jensen @ (435) 637-6242 (office).

12. OTHER INFORMATION

The well site and new road were inspected by LaPlata Archaeological Services on July 17. No sites were found. If cultural resources are found during construction, all work will stop in that area and the State Historic Preservation Office notified. Huber will inform those in the area associated with the well that they are subject to prosecution for disturbing historic or archaeology sites or for collecting artifacts.

13. REPRESENTATION

Anyone having questions concerning the APD should contact:

Brian Wood
Permits West, Inc.
37 Verano Loop
Santa Fe, NM 87505
(505) 466-8120 FAX: (505) 466-9682 Mobile: (505) 699-2276

The field representative during drilling for Huber will be:

Rick Marshall
CBM Services, Inc.
1199 Main Ave.
Durango, Co. 80301
(970) 385-7747

#990729 80,000 Surety
American Casualty of Reading, PA
929103264 (SITLA)
fc

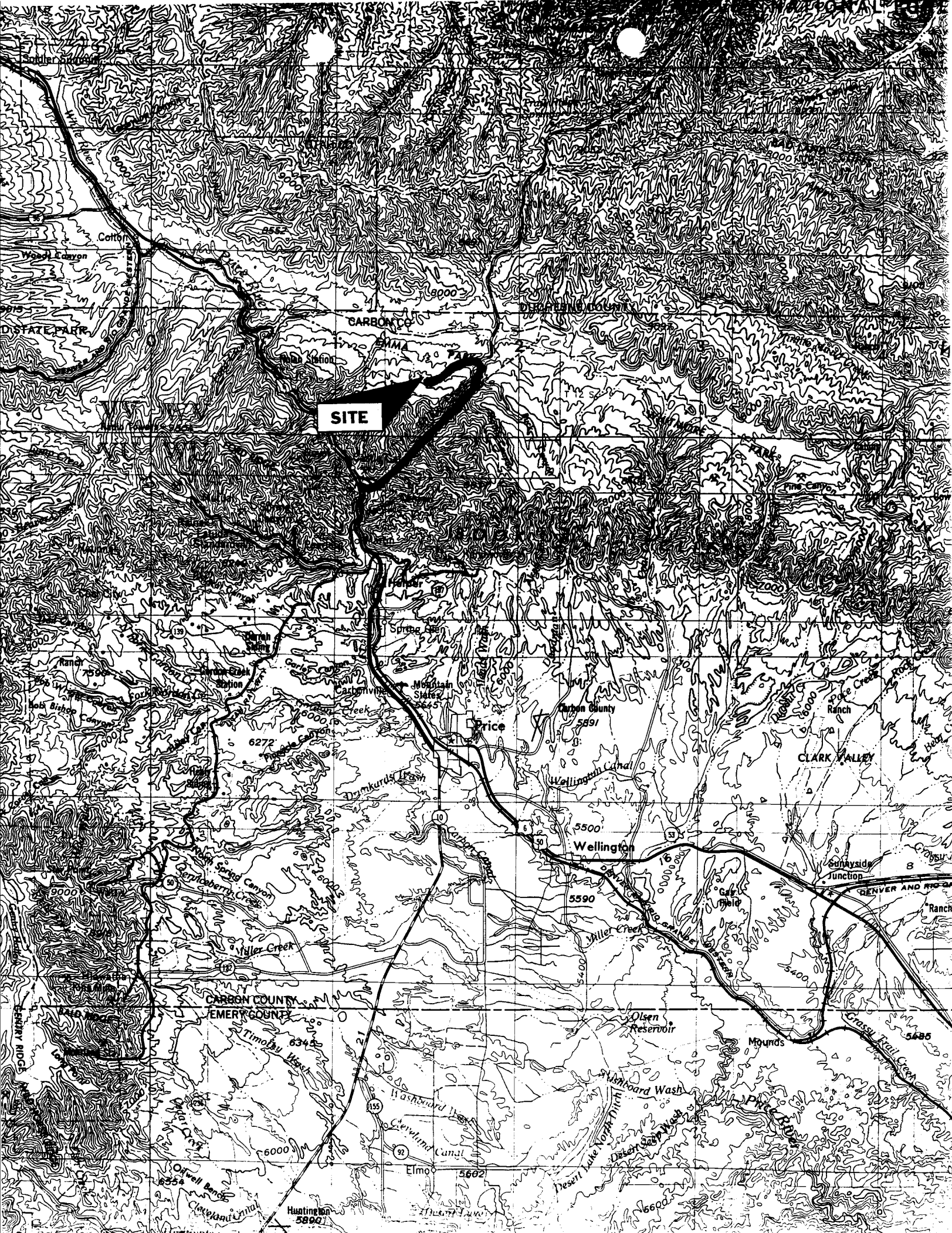
SITE
Price
Wellington
Mounds
Elmo
Huntington
Castle Gate
Spring Glen
Carbonville
Mountain View
Cottonwood
Wellington Canal
Cleveland Canal
Washboard Wash
Desert Lake North Ditch
Desert Lake Wash
Price River
Olsen Reservoir
Miller Creek
Grassy Trail Creek
Timothy Wash
Carbon County
Emery County
Sunnyside Junction
Clark Valley
Gas Field
Carbon Creek
Pole Creek Ranch
Denver and Rio Grande Western
Oilwell Bench
Cottonwood Canyon
Wood Canyon
Bob Bishop Canyon
Fork Robbers Gulch
Huntington Canyon
Huntington Station
Cedar Creek Station
Castle Gate Station
Pinnacle Canyon
Pine Canyon
Hidden Canyon
Dry Canyon
Dry Creek
Sand Wash
Cedar Creek
Cleveland Canal
Drunkards Wash
Carbon Canyon
Hatch Spring Canyon
Serviceberry Creek
Miller Creek
Timothy Wash
Washboard Wash
Desert Lake Wash
Price River
Grassy Trail Creek
Carbon County
Emery County
Castle Gate
Spring Glen
Carbonville
Mountain View
Price
Wellington
Mounds
Elmo
Huntington
Cottonwood
Wellington Canal
Cleveland Canal
Olsen Reservoir
Clark Valley
Sunnyside Junction
Gas Field
Pole Creek Ranch
Denver and Rio Grande Western
Oilwell Bench
Cottonwood Canyon
Wood Canyon
Bob Bishop Canyon
Huntington Canyon
Huntington Station
Cedar Creek Station
Castle Gate Station
Pinnacle Canyon
Pine Canyon
Hidden Canyon
Dry Canyon
Dry Creek
Sand Wash
Cedar Creek

J. M. Huber Corporation
Huber-State 1-16
820' FNL & 2163' FEL
Sec. 16, T. 12 S., R. 10 E.
Carbon County, Utah

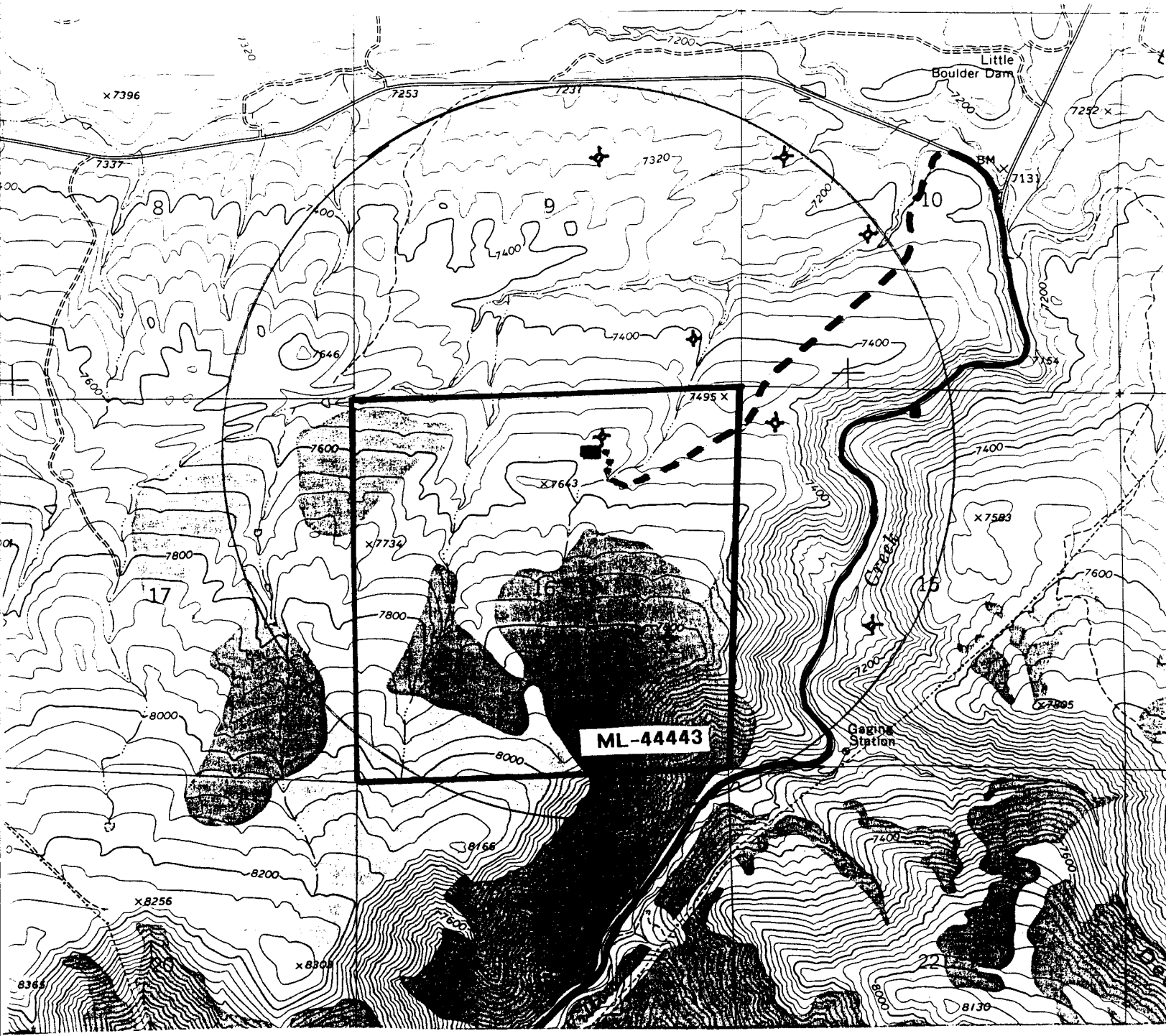

PROPOSED WELL: ■ WATER WELL: ● P&A WELL: ✢
PAVED ROAD: ~ GRAVEL ROAD: — NEW ROAD: •••
LEASE LINE: ┌

PERMITS WEST, INC.
PROVIDING PERMITS for LAND USERS

J. M. Huber Corporation
Huber-State 1-16
820' FNL & 2163' FEL
Sec. 16, T. 12 S., R. 10 E.
Carbon County, Utah

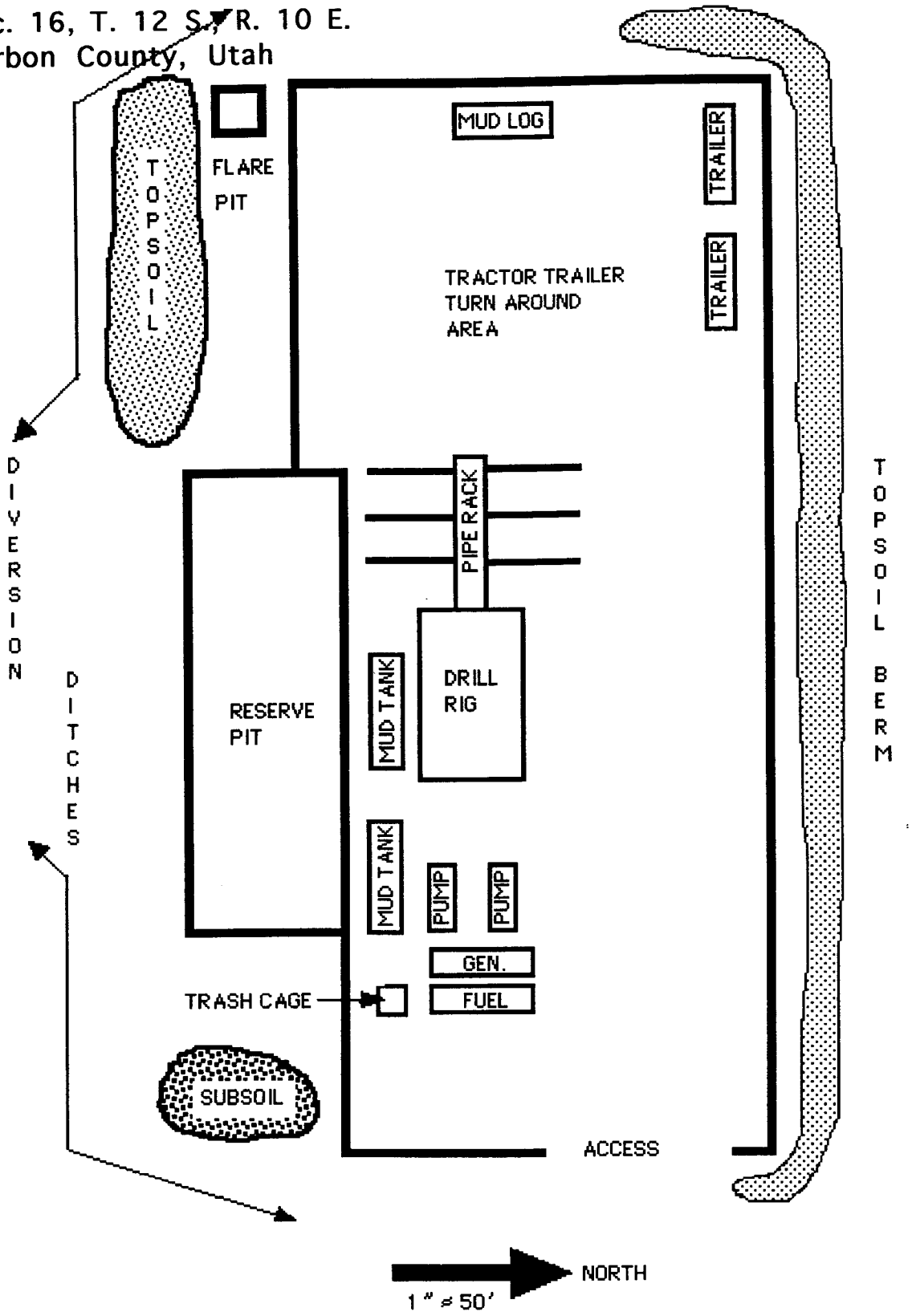

PERMITS WEST, INC.
PROVIDING PERMITS for LAND USERS

Huber State 1 - 16
well pad & section

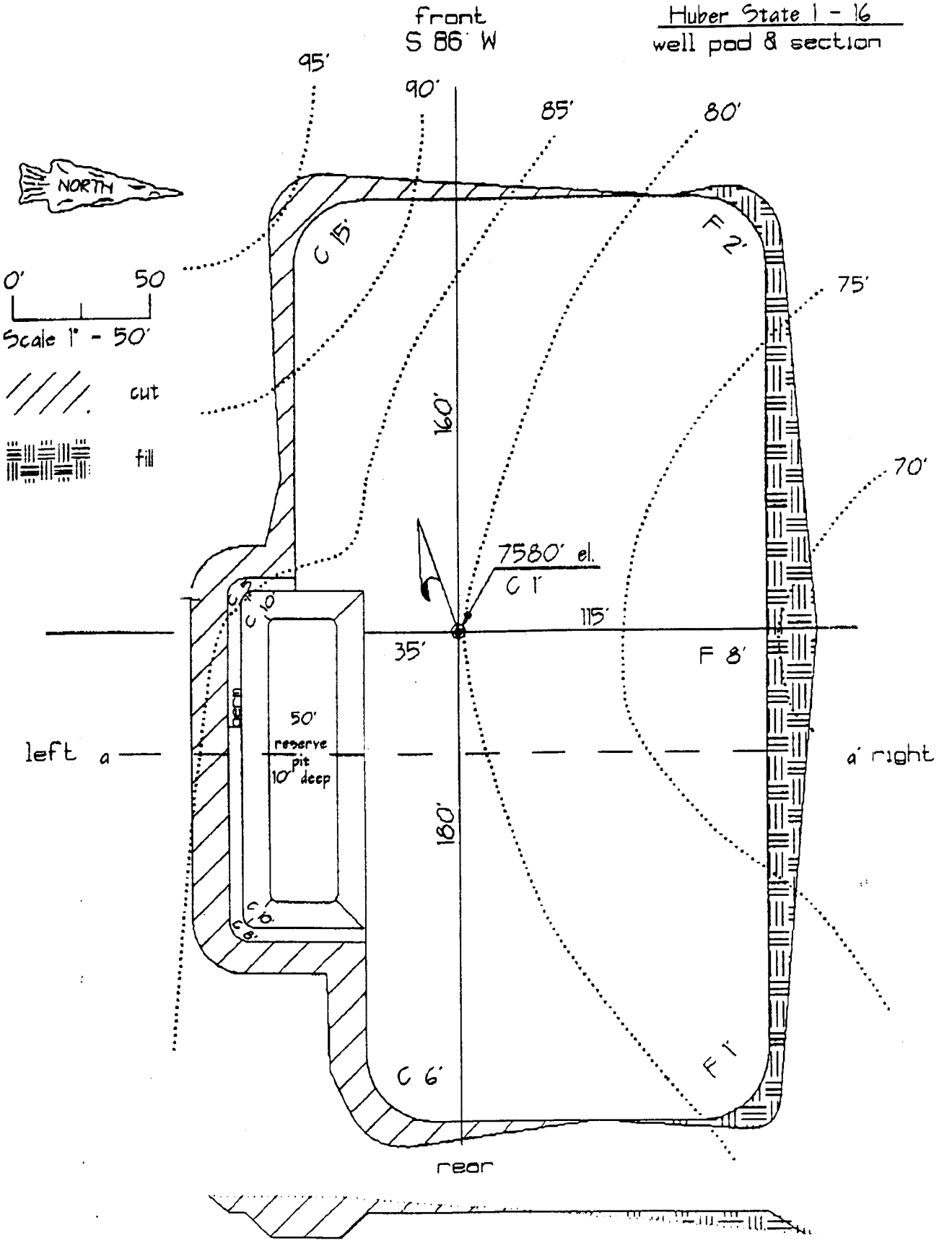

NOTE: CENTER STAKE IS MARKED WITH GREEN STEEL FENCE POST

ON-SITE PREDRILL EVALUATION

Division of Oil, Gas and Mining

OPERATOR: J.M. Huber
WELL NAME & NUMBER: Huber State #1-16
API NUMBER: 43-007-30589
LEASE: State ML-44443 FIELD/UNIT: Castlegate Field (013)
LOCATION: 1/4,1/4 NWNE Sec: 16 TWP: 12 S RNG: 10 E 820 FNL 2163 FEL
LEGAL WELL SITING: 460 F SEC. LINE; 460 F 1/4,1/4 LINE; 920 F ANOTHER WELL.
GPS COORD (UTM): X =516,835 E ; Y = 4,404,116 N
SURFACE OWNER: State of Utah

PARTICIPANTS

Mike Hebertson (DOGM), Brian Wood (Permits West),

REGIONAL/LOCAL SETTING & TOPOGRAPHY

This well is located on the second bench of the Wasatch Plateau about 3 miles south of the Roan Cliffs, in the area known as Emma Park. Mathis Canyon is to the south of the location about 1 ½ miles and Willow Creek is a major active stream that flows to the south about 1 mile to the East circling to the south. Other drainages intersect the major secondary and primary system flowing generally north and then east until they meet Willow Creek thence to the Price River. The whole of Emma Park is open Sage Brush meadow with interspersed grass lands. The surface is of Tertiary & Cretaceous age rocks from the Flagstaff Limestone and the North Horn Conglomerate. The Flagstaff is of lacustrine origin and the North Horn is of a fluvial origin. There is no distinct contact between the two since the two have many complex overlapping facies in this area.

SURFACE USE PLAN

CURRENT SURFACE USE: Open range wildlife and livestock use.

PROPOSED SURFACE DISTURBANCE: A location 340 X 200 with 600' of new access road. The old road will require fixing and upgrading for about 1 mile. The pit will be 150 X 50 X 10 and will be placed inboard on the south side of the location. The access road will enter the pad on the east side.

LOCATION OF EXISTING WELLS WITHIN A 1 MILE RADIUS: There are 8 P&A wells within one mile, all of which were drilled to the Mesa Verde.

LOCATION OF PRODUCTION FACILITIES AND PIPELINES: Will follow the roads and already established corridors in the abandoned field area. Pipelines and power lines are still in place from previous work.

SOURCE OF CONSTRUCTION MATERIAL: Borrowed from the construction of the location. A commercial supplier will be used for the gravel pad.

ANCILLARY FACILITIES: These are already in place.

WASTE MANAGEMENT PLAN:

Portable chemical toilets which will be emptied into the municipal waste treatment system; garbage cans on location will be emptied into centralized dumpsters which will be emptied into an approved landfill. No crude oil is expected to be produced. Drilling fluid, completion / frac fluid and cuttings will be buried in the pit after evaporation and slashing the pit liner. Used oil from drilling operations and support is hauled to a used oil re-cycler and re-used. Produced water will be disposed of at an approved facility.

ENVIRONMENTAL PARAMETERS

AFFECTED FLOODPLAINS AND/OR WETLANDS: None.

FLORA/FAUNA: Deer, Elk, Moose, Cougar, Eagles, Hawks, Other indigenous bird species, Aspen, varieties of grasses, Sage Brush, Rabbit Brush.

SOIL TYPE AND CHARACTERISTICS: Clay from the limestone which weathers to a dark tan to redish in color. Locally with sandstone inclusions and fossil trash or remains.

SURFACE FORMATION & CHARACTERISTICS: Flagstaff Limestone interbedded with the North Horn Formation which varies from a conglomerate to a thinly bedded sandstone and interfingers with the Flagstaff.

EROSION/SEDIMENTATION/STABILITY: No stability, sedimentation, or erosion problems with the selected site with berms and diversions in place .

PALEONTOLOGICAL POTENTIAL: A survey of this area had been completed with no sites found.

RESERVE PIT

CHARACTERISTICS: The pit will be 150 X 50 X 10 and will be placed in cut material on the south side of location

LINER REQUIREMENTS (Site Ranking Form attached): A synthetic liner will be required.

SURFACE RESTORATION/RECLAMATION PLAN

Issued as part of the lease.

SURFACE AGREEMENT: Issued as part of the lease

CULTURAL RESOURCES/ARCHAEOLOGY: Survey will be required.

OTHER OBSERVATIONS/COMMENTS

This location is on the same general disturbed location as a previous well and will require very little alteration from the previous pad. However the center of the location has been moved to the west where the terrain does not fall off 50 feet into a small wash, this will be a more stable location than the previous location. The operator was notified that bonding will be required before the APD is issued. A

surface owner who owns surface on the access road near the highway arrived as we finished the inspection however he had no problems with the placement of the location.

ATTACHMENTS:

Photos were taken and will be placed on file.

K. Michael Hebertson
DOGM REPRESENTATIVE

15/July/1999/ 10:00 AM
DATE/TIME

UTAH DIVISION OF WATER RIGHTS
WATER RIGHT POINT OF DIVERSION PLOT CREATED WED, JUL 1
PLOT SHOWS LOCATION OF 53 POINTS OF DIV

PLOT OF AN AREA WITH A RADIUS OF 5280 FEET
S 850 FEET, W 1700 FEET OF THE NE CORNER,
SECTION 16 TOWNSHIP 12S RANGE 10E SL BASE

PLOT SCALE IS APPROXIMATELY 1 INCH = 2000 FE

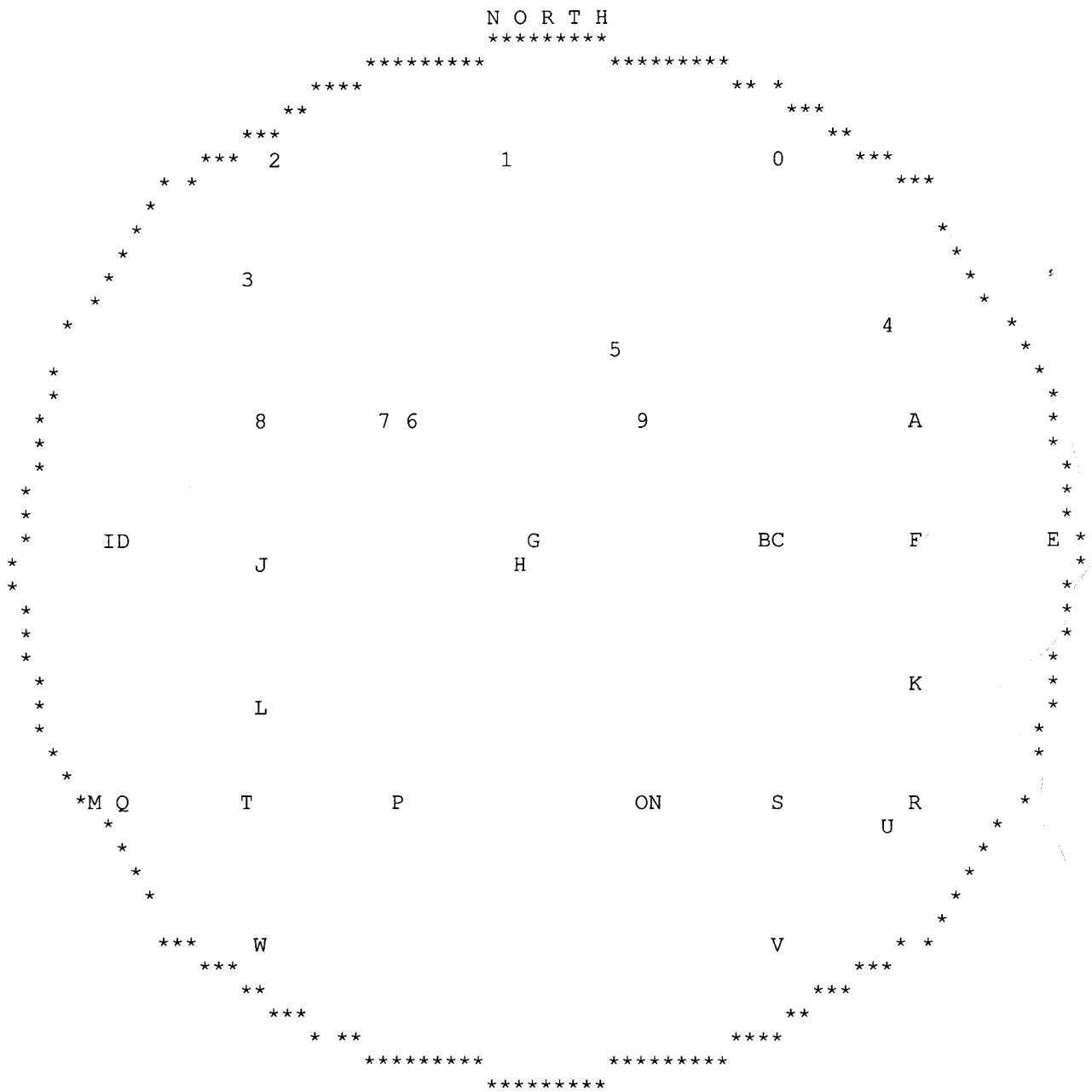

UTAH DIVISION OF WATER RIGHTS
NWPLAT POINT OF DIVERSION LOCATION PRO

MAP CHAR	WATER RIGHT	QUANTITY CFS	AND/OR AC-FT	SOURCE DESCRIPTION or WELL INFO DIAMETER	DEPTH	YEAR LOG	NORTH	POIN
0	91 1261	.0110	.00	Unnamed Spring				
		WATER USE(S):						
		Moynier, Pierre (Jr.)			748 North 400 East			
0	91 4830	2.0000	.00	6	3800	- 5000	S	2065
		WATER USE(S): IRRIGATION STOCKWATERING MUNICIPAL POWER OTHER						
		PG&E Resources Company			6688 No. Central Expressway			
0	91 4983	.1600	.00	5	4829		S	2065
		WATER USE(S): IRRIGATION OTHER						
		Anadarko Petroleum Corporation			9400 North Broadway			
1	91 4823	10.0000	.00	Underground Wells			S	2000
		WATER USE(S): MUNICIPAL						
		Price River Water Improvement District			P.O. Box 903			
1	91 4830	2.0000	.00	6	3800	- 5000	S	2019
		WATER USE(S): IRRIGATION STOCKWATERING MUNICIPAL POWER OTHER						
		PG&E Resources Company			6688 No. Central Expressway			
1	91 4983	.1600	.00	5	4878		S	2019
		WATER USE(S): IRRIGATION OTHER						
		Anadarko Petroleum Corporation			9400 North Broadway			
2	91 4823	10.0000	.00	Underground Wells			S	2000
		WATER USE(S): MUNICIPAL						
		Price River Water Improvement District			P.O. Box 903			
3	91 4830	2.0000	.00	6	3800	- 5000	N	2024
		WATER USE(S): IRRIGATION STOCKWATERING MUNICIPAL POWER OTHER						
		PG&E Resources Company			6688 No. Central Expressway			
4	91 4830	2.0000	.00	6	3800	- 5000	N	1461
		WATER USE(S): IRRIGATION STOCKWATERING MUNICIPAL POWER OTHER						
		PG&E Resources Company			6688 No. Central Expressway			
4	91 4983	.1600	.00	5	4561		N	1461
		WATER USE(S): IRRIGATION OTHER						
		Anadarko Petroleum Corporation			9400 North Broadway			
5	91 4830	2.0000	.00	6	3800	- 5000	N	1198
		WATER USE(S): IRRIGATION STOCKWATERING MUNICIPAL POWER OTHER						
		PG&E Resources Company			6688 No. Central Expressway			
5	91 4983	.1600	.00	5	4617		N	1198
		WATER USE(S): IRRIGATION OTHER						
		Anadarko Petroleum Corporation			9400 North Broadway			
6	91 4830	2.0000	.00	6	3800	- 5000	N	675

WATER USE(S): IRRIGATION STOCKWATERING MUNICIPAL POWER OTHER
PG&E Resources Company 6688 No. Central Expressway

7 91 1262 .0110 .00 Unnamed Spring
WATER USE(S):
Moynier, Pierre (Jr.) 748 North 400 East

8 91 4823 10.0000 .00 Underground Wells N 650
WATER USE(S): MUNICIPAL
Price River Water Improvement District P.O. Box 903

9 91 4823 10.0000 .00 Underground Wells N 650
WATER USE(S): MUNICIPAL
Price River Water Improvement District P.O. Box 903

A 91 4823 10.0000 .00 Underground Wells N 650
WATER USE(S): MUNICIPAL
Price River Water Improvement District P.O. Box 903

B 91 4830 2.0000 .00 6 3800 - 5000 S 660
WATER USE(S): IRRIGATION STOCKWATERING MUNICIPAL POWER OTHER
PG&E Resources Company 6688 No. Central Expressway

B 91 4823 10.0000 .00 Underground Wells S 700
WATER USE(S): MUNICIPAL
Price River Water Improvement District P.O. Box 903

C 91 4983 .1600 .00 5 4444 S 660
WATER USE(S): IRRIGATION OTHER
Anadarko Petroleum Corporation 9400 North Broadway

D 91 1264 .0110 .00 Unnamed Spring
WATER USE(S):
Moynier, Pierre (Jr.) 748 North 400 East

E 91 1260 .0000 .00 Willow Creek
WATER USE(S):
Moynier, Lea 284 North Carbon Ave.

F 91 3181 .0000 .00 Willow Creek
WATER USE(S):
Security Title Company

F 91 3182 .0000 .00 Willow Creek
WATER USE(S):
Security Title Company

G 91 4823 10.0000 .00 Underground Wells S 700
WATER USE(S): MUNICIPAL
Price River Water Improvement District P.O. Box 903

H 91 4830 2.0000 .00 6 3800 - 5000 S 780
WATER USE(S): IRRIGATION STOCKWATERING MUNICIPAL POWER OTHER
PG&E Resources Company 6688 No. Central Expressway

H 91 4983 .1600 .00 5 4559 S 780
WATER USE(S): IRRIGATION OTHER
Anadarko Petroleum Corporation 9400 North Broadway

I 91 4823 10.0000 .00 Underground Wells S 700
WATER USE(S): MUNICIPAL
Price River Water Improvement District P.O. Box 903

J 91 4830 2.0000 .00 6 3800 - 5000 S 922
WATER USE(S): IRRIGATION STOCKWATERING MUNICIPAL POWER OTHER

PG&E Resources Company 6688 No. Central Expressway

K 91 3181 .0000 .00 Willow Creek
WATER USE(S):
Security Title Company

K 91 3182 .0000 .00 Willow Creek
WATER USE(S):
Security Title Company

L 91 4823 10.0000 .00 Underground Wells S 2200
WATER USE(S): MUNICIPAL
Price River Water Improvement District P.O. Box 903

M 91 4823 10.0000 .00 Underground Wells N 2050
WATER USE(S): MUNICIPAL
Price River Water Improvement District P.O. Box 903

N 91 4823 10.0000 .00 Underground Wells N 2000
WATER USE(S): MUNICIPAL
Price River Water Improvement District P.O. Box 903

O 91 4830 2.0000 .00 6 3800 - 5000 N 1993
WATER USE(S): IRRIGATION STOCKWATERING MUNICIPAL POWER OTHER
PG&E Resources Company 6688 No. Central Expressway

O 91 4983 .1600 .00 5 4458 N 1993
WATER USE(S): IRRIGATION OTHER
Anadarko Petroleum Corporation 9400 North Broadway

P 91 4830 2.0000 .00 6 3800 - 5000 N 1980
WATER USE(S): IRRIGATION STOCKWATERING MUNICIPAL POWER OTHER
PG&E Resources Company 6688 No. Central Expressway

Q 91 1263 .0110 .00 Unnamed Spring
WATER USE(S):
Moynier, Pierre (Jr.) 748 North 400 East

R 91 1258 .0000 .00 Willow Creek
WATER USE(S):
Moynier, Pierre (Jr.) 748 North 400 East

R 91 1258 .0000 .00 Willow Creek
WATER USE(S):
Moynier, Pierre (Jr.) 748 North 400 East

S 91 3184 .0000 .00 Willow Creek
WATER USE(S):
Security Title Company

S 91 3184 .0000 .00 Willow Creek
WATER USE(S):
Security Title Company

S 91 3185 .0000 .00 Willow Creek
WATER USE(S):
Security Title Company

S 91 3185 .0000 .00 Willow Creek
WATER USE(S):
Security Title Company

T 91 2526 .0110 .00 Unnamed Spring
WATER USE(S): STOCKWATERING
State of Utah School & Institutional Tru 675 East 500 South, 5th Floor

U 91 4823 10.0000 .00 Underground Wells N 1900
WATER USE(S): MUNICIPAL
Price River Water Improvement District P.O. Box 903

U 91 4830 2.0000 .00 6 3800 - 5000 N 1896
WATER USE(S): IRRIGATION STOCKWATERING MUNICIPAL POWER OTHER
PG&E Resources Company 6688 No. Central Expressway

U 91 4983 .1600 .00 5 3811 N 1896
WATER USE(S): IRRIGATION OTHER
Anadarko Petroleum Corporation 9400 North Broadway

V 91 1259 .0000 .00 Willow Creek
WATER USE(S):
Moynier, Pierre (Jr.) 748 North 400 East

V 91 1259 .0000 .00 Willow Creek
WATER USE(S):
Moynier, Pierre (Jr.) 748 North 400 East

V 91 2486 .0000 .00 Willow Creek
WATER USE(S):
Moynier Brothers

V 91 2486 .0000 .00 Willow Creek
WATER USE(S):
Moynier Brothers

W 91 4823 10.0000 .00 Underground Wells N 650
WATER USE(S): MUNICIPAL
Price River Water Improvement District P.O. Box 903

PERMITS WEST, INC.
PROVIDING PERMITS for LAND USERS
37 Verano Loop, Santa Fe, New Mexico 87505 (505) 466-8120

July 9, 1999

Mike Hebertson
Ut. Div. of Oil, Gas, & Mining
1594 West North Temple, Suite 1210
Salt Lake City, Ut.

Dear Mike,

This is to confirm our on site rendezvous for Thursday, July 15 at Thistle Junction at 0830.

In accordance with rule R649-3-18.1., I am requesting that the on site be held before submittal of the APD. This will allow changes made at the on site to be incorporated into just the APD, and not appended through a series of Sundry Notices which could be lost. I will have plats with well site dimensions, plan view, and profile at the on site. Specifics are ...

Operator: J. M. Huber Corporation
Lease: State ML-44443 (640 acres)
Tentative Location: ~~850~~ 820 FN & ~~1700~~ 2163 FE 16-12s-10e, Carbon County
Spud Date: July 31, 1999
Target Zone: Black Hawk coal of the Mesa Verde
Total Depth: 5,000'

I have marked the proposed well and access route on the attached Matt's Summit USGS map. The last mile of road has been reclaimed, so we may need our boots.

Please call me if you have any questions.

I look forward to working with you again.

Sincerely,

Brian Wood

Brian Wood

RECEIVED
JUL 12 1999
DIV. OF OIL, GAS & MINING

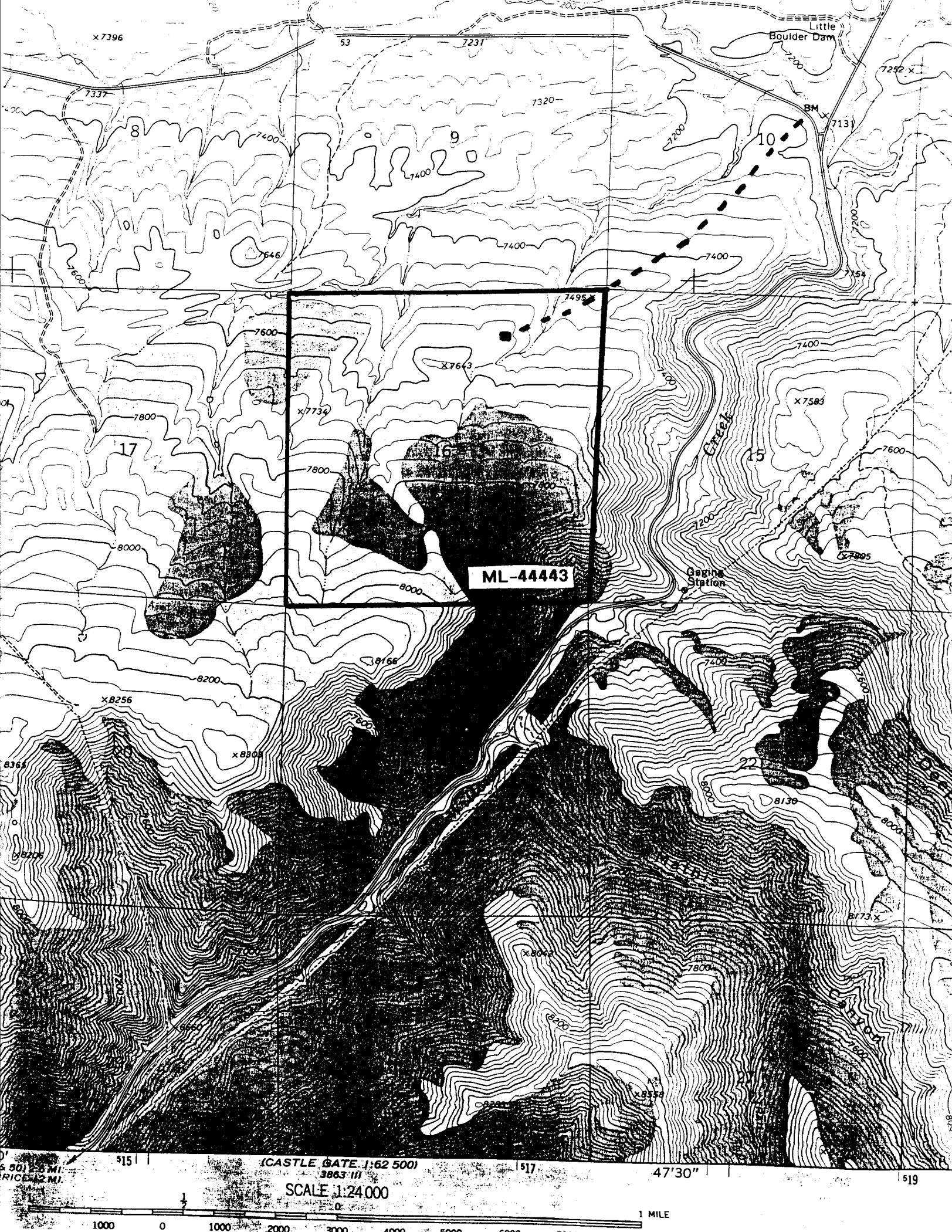
Little Boulder Dam
ML-44443
Gaging Station
Creek
Canyon
(CASTLE GATE 1:62 500)
3863 III
SCALE 1:24 000
1 MILE
47'30"

State of Utah
DEPARTMENT OF NATURAL RESOURCES
DIVISION OF WILDLIFE RESOURCES

Michael O. Leavitt
Governor
Kathleen Clarke
Executive Director
John Kimball
Division Director

Southeastern Region
475 West Price River Drive, Suite C
Price, Utah 84501-2860
435-636-0260
435-637-7361 (Fax)

RECEIVED
JUL 26 1999
DIV. OF OIL, GAS & MINING

July 19, 1999

Mike Hebertson
Division of Oil, Gas & Mining
1594 W. North Temple #1210
PO Box 145801
Salt Lake City, UT 84114-5801

RE: DWR request for Sage Grouse stipulations on Huber #1 Gas Well

Dear Mike,

The Division of Wildlife Resources (DWR) requests that construction and drilling of the Huber #1 Well on SITLA property not occur during from April 1st through July 15th. This well location is within critical sage grouse strutting and brooding habitat. The DWR is concerned over Sage grouse; in the Southeastern Region sage grouse have shown a significant negative trend over the past twenty years. We therefore appreciate your inclusion of this request in the drilling permit.

Sincerely,

Miles Moretti
Regional Supervisor

C: James Cooper – SITLA
Laura Romin – USFWS

H:\wp\gas\huber.doc

LA PLATA ARCHAEOLOGICAL CONSULTANTS

July 19, 1999

Mr. Kenny Wintch, Archaeologist
Utah School and Institutional Trust Lands Administration
675 East 500 South, Suite 500
Salt Lake City, Utah 84102-2818

Dear Kenny:

Please find enclosed two copies of a report that I prepared for a project in Carbon County, Utah. The project is located on Utah School and Institutional Trust Lands and is for a single drilling location which is being proposed by J. M. Huber Corporation. There is no other government involvement in the project. No sites were encountered and archaeological clearance is recommended for the project.

If you have any questions or need further information, please let me know.

Sincerely,

Steven L. Fuller

Enclosures

cc: Scott Zimmerman, J.. M. Huber Corp.
Brian Wood, Permits West
Mike Hebertson, Utah Division of Oil, Gas, and Mining

RECEIVED
JUL 26 1999
DIV. OF OIL, GAS & MINING

26851 County Road P • Dolores, Colorado 81323
Office (970) 565 • 8708 • Mobile (970) 749 • 0056 • Fax (970) 882-2224

ARCHAEOLOGICAL SURVEY OF J.M. HUBER CORPORATION'S HUBER-STATE 16-1 WELL PAD AND ACCESS ROAD CARBON COUNTY, UTAH

LAC REPORT 9946

by

Steven L. Fuller

LA PLATA ARCHAEOLOGICAL CONSULTANTS
26851 County Road P
Dolores, Colorado 81323
(970) 565-8708

UTAH PERMIT NUMBER U99-LA-0360s

July 19, 1999

Prepared For:
J.M. Huber Corporation
1050 17th Street, Suite 1850
Denver, Colorado 80265

ABSTRACT

The archaeological survey of J.M. Huber Corporation's Huber-State 16-1 well pad and access road was conducted by personnel of La Plata Archaeological Consultants on July 17, 1999. The project is located in Carbon County, Utah, on Utah School and Institutional Trust Lands. A 600- by 600-ft area (8.25 acres) was surveyed surrounding the well center stake. An additional 350 ft of access road route was also surveyed (0.8 acres). No archaeological sites were encountered during the survey and archaeological clearance is recommended for the proposed well pad and access road.

INTRODUCTION

The archaeological survey of J.M. Huber Corporation's proposed Huber-State 16-1 well pad and access road was conducted by Steven Fuller of La Plata Archaeological Consultants on July 17, 1999. The survey was requested by Mr. Brian Wood of permits West who was acting as a permit agent for J.M. Huber Corporation. The project was staked and flagged by a survey team from Huddleston Land Surveys. The well pad and access road are located entirely on Utah School and Institutional Trust Lands. All work on this project was conducted under the terms of Utah State Permit U99-LA-0360s issued to La Plata Archaeological Consultants.

The well pad is located in T12S, R10E, Section 16, Carbon County, Utah (Figure 1). The actual center stake of the location is in the NW¼ NE¼ (820 FNL, 2163 FEL), and is included on the U.S.G.S. Matt's Summit, Utah 7.5' series topographic map (Figure 2). An 8.25-acre block was surveyed surrounding the well pad on State School and Institutional Trust Lands. The 600- by 600-foot block was surveyed to cover the 340- by 200-foot well pad and a buffer zone that measured about 150 feet in width. Also surveyed for this location was a corridor about 350 feet long by 100 feet wide for the proposed new access road, covering 0.75 acres. A total of about 9 acres were surveyed for this project. At least half of the survey area was previously disturbed for an existing (and reclaimed) well pad that was drilled in the early 1990s. It appears that at least 90 percent of the survey conducted for the proposed Huber well is within the survey area conducted by Metcalf Archaeological Consultants in 1991 (Scott 1991). No archaeological sites or isolated finds were encountered within the new survey area. One previously recorded site (42CB763) was recorded in 1991 (Scott 1991) but that site appears to be several hundred feet north of the current project area and was not relocated. Archaeological clearance is recommended for the proposed well location and access road.

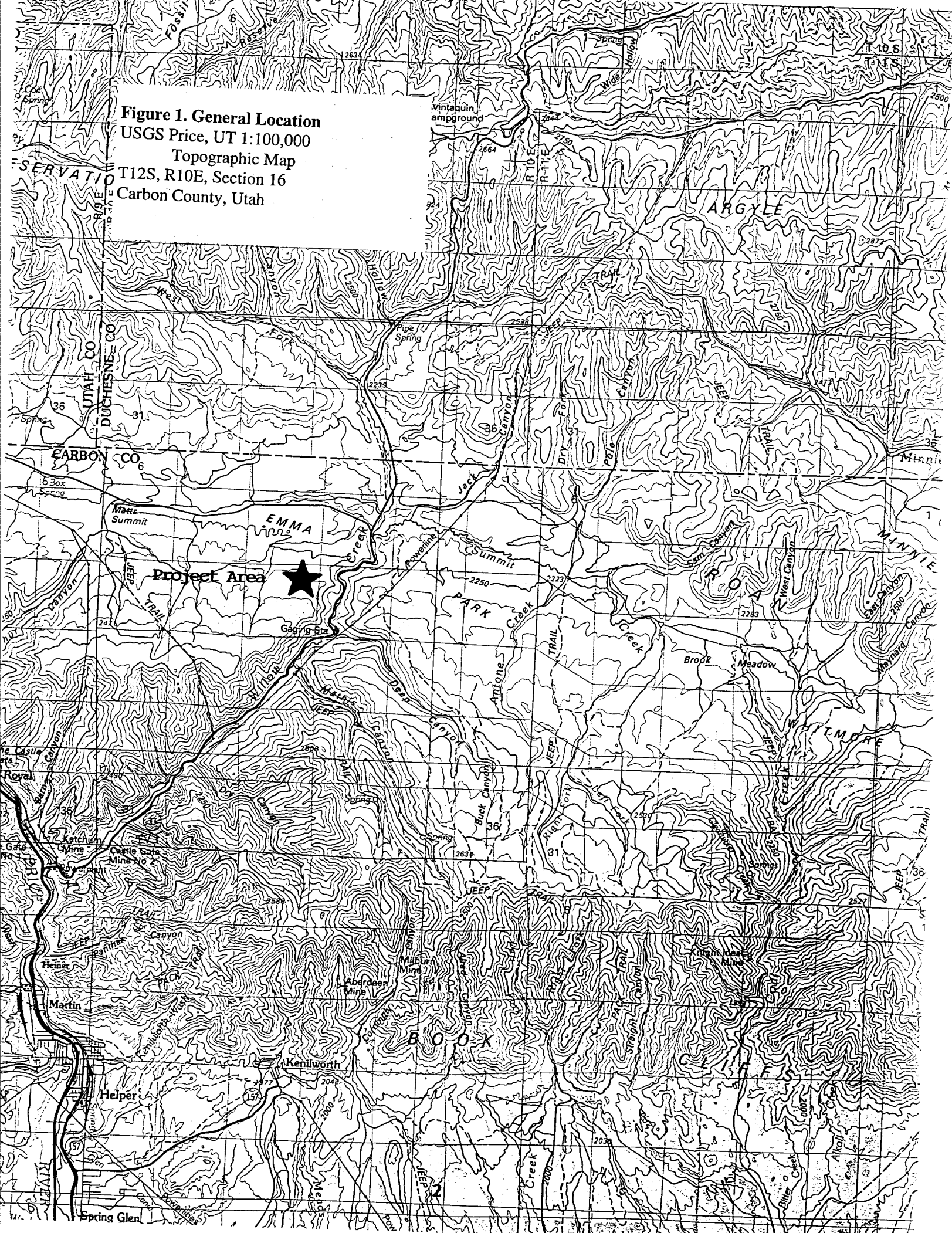
Project Area
ARGYLE
EMMA
PARK
ROAN
WHITMORE
BOOK
CLIFFS
UTAH CO
DUCHESNE CO
CARBON CO
Matts Summit
Pipe Spring
Gaging Sta
Ketchum Mine
Castle Gate Mine No 2
Royal
Heiner
Martin
Kenilworth
Helper
Spring Glen
Aberdeen Mine
Milburn Mine
Knight Idea Mine
Brook Meadow
Wide Hollow
Jack Canyon
Dry Fork
Pole Canyon
Deep Canyon
Willow Creek
Buck Canyon
Right Fork
Straight Canyon
Bitter Creek
Powerline
Vintaquin Campground
Fossil Reserve
Cat Spring
Box Spring
Spring
T 10 S
T 11 S
R 10 E
R 11 E
R 9 E
R 8 E
2500
2250
2000
2000
2000

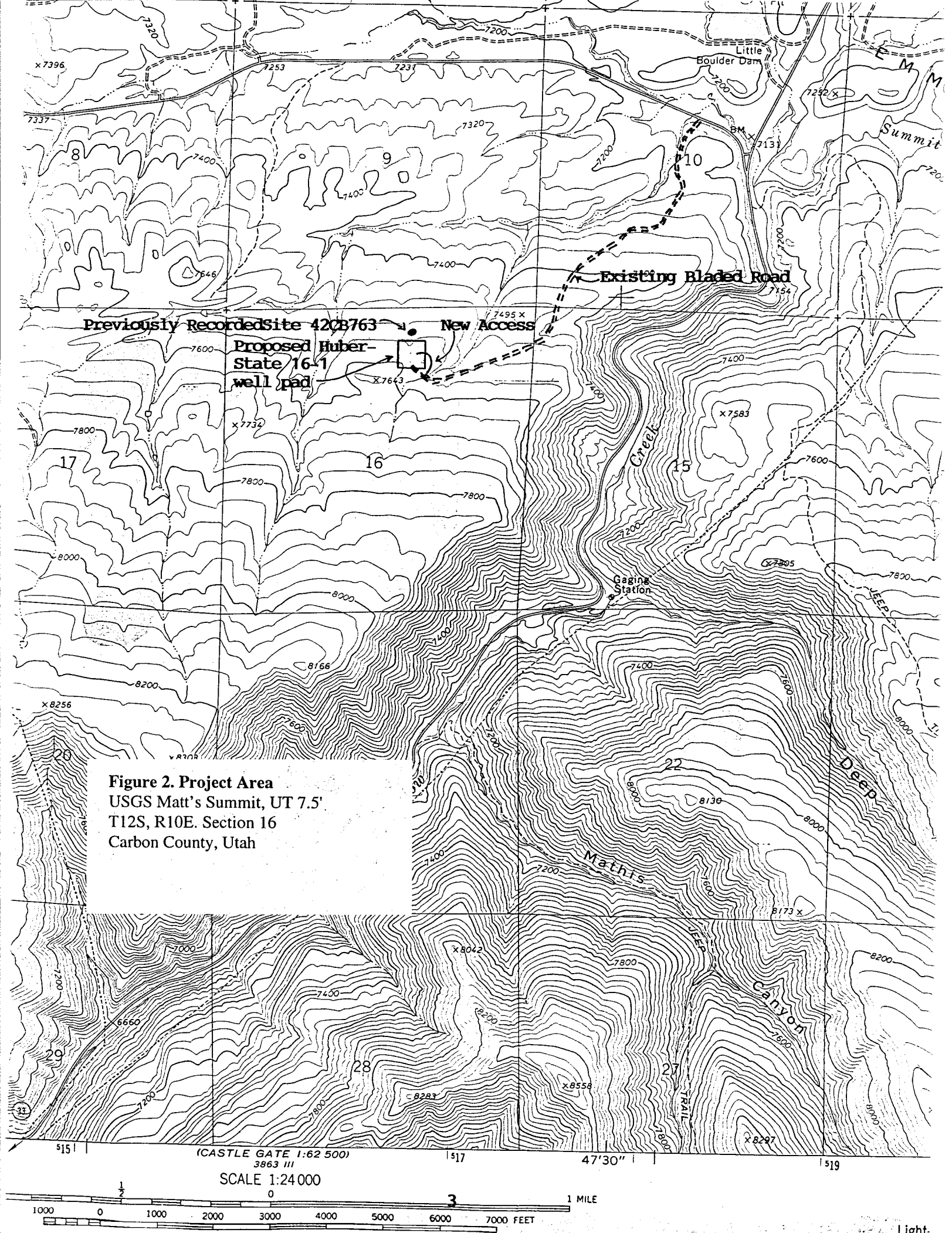

Figure 2. Project Area
USGS Matt's Summit, UT 7.5'
T12S, R10E. Section 16
Carbon County, Utah

PHYSIOGRAPHY AND ENVIRONMENT

The project area is located approximately 9 miles northeast of Helper, Utah, on Utah SSchool and Institutional Trust Lands. The project area is about 1 mile west of US Highway 191 and on the south flank of Emma Park, a broad valley that separates the Book Cliffs to the south from the Roan Cliffs to the north. Topographically, the project area is mostly on a north-facing slope between north-flowing tributaries of Summit Creek. The access to the well will follow approximately 1.5 miles of existing road that was constructed for an abandoned location in the early 1990s (Figure 2), requiring no new construction. The final 600 ft of access will deviate from the existing road around and to the southeast of a low rock outcrop, entering the proposed location from the east. Vegetation on and around the proposed well pad has mostly been removed for previous well pad construction but the surrounding terrain supports a sagebrush shrubland with grasses, snakeweed, a few isolated juniper trees, and a few mountain mahogany and Gambel oak plants. Soils are thin with gray siltstone or mudstone exposed in places throughout the project area.

SURVEY METHODS

A records search was conducted for this project using the records maintained by the Utah Division of State History on July 9, 1999. Based on this search, there is only one previously recorded site in the vicinity of the current project. Site 42CB763 is a small lithic scatter that was recorded in 1991 for the abandoned well that is overlapped by this proposed location. The site was not relocated during this survey, being plotted at least 200 ft to the north of the current project area. The records search also indicated that most of the current project area is within the area examined in 1991 for the existing well pad (Moore 1991).

The well pad and access road were surveyed after they were staked by personnel of Huddleston Land Surveying. Parallel pedestrian transects spaced about 15 m apart were used to cover the well pad, short section of access road, and buffer zones. The well pad wil measure 340 by 200 ft, over 50 percent overlapping an existing, reclaimed well pad. The block survey measured apperoximately 600 by 600 ft (Figure 3) to encompass the proposed location and buffer zones that measured approximately 150 ft in width. The 600 ft or so of new access road extends about 350 ft beyond the block survey area; a 100-ft wide corridor was examined using two parallel 15 m wide transects.

SURVEY RESULTS

No cultural resources were encountered within the survey area.

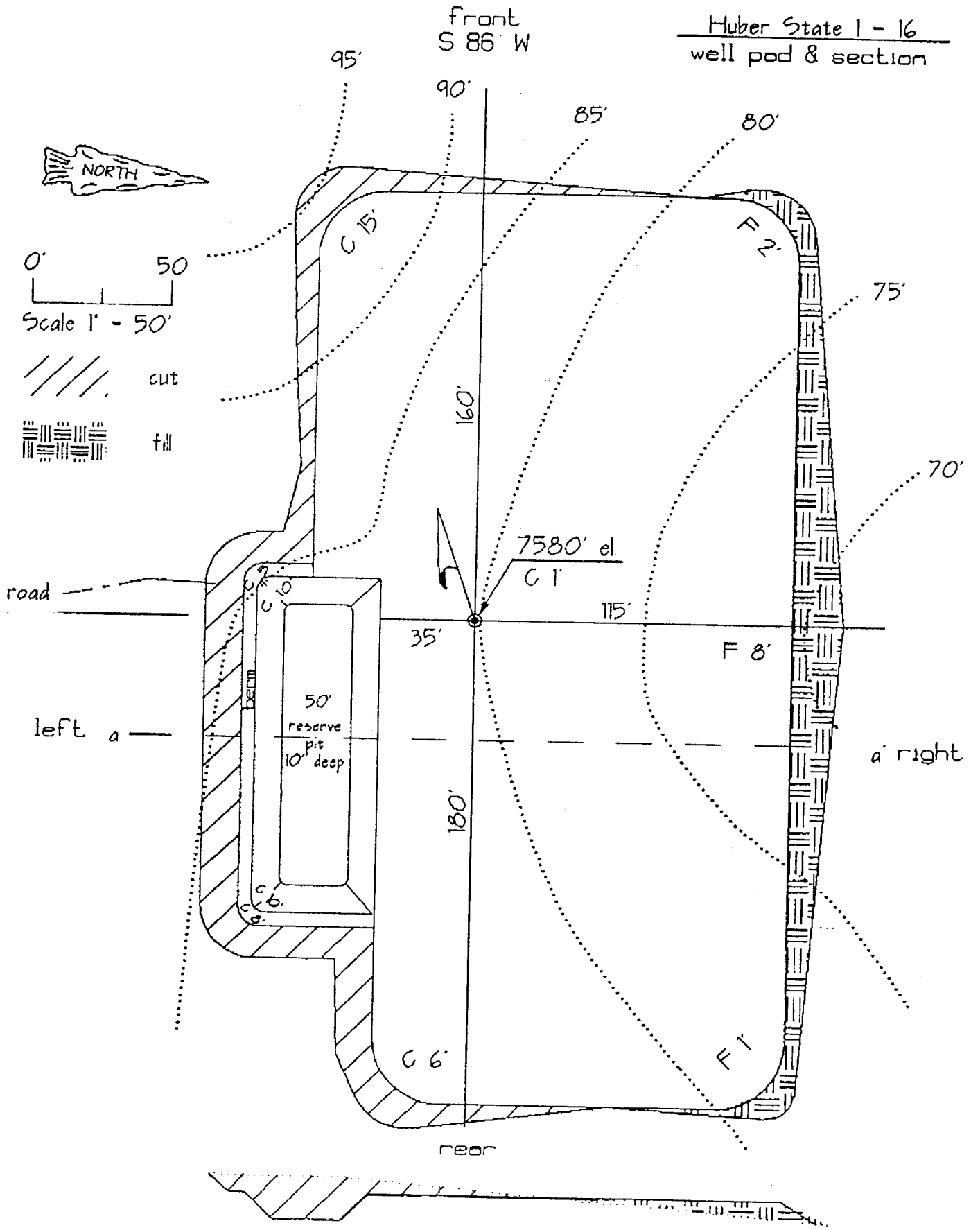

Figure 3. Well pad plat

CONCLUSIONS AND RECOMMENDATIONS

The archaeological survey for J.M. Huber Corporation's Huber-State 16-1 well pad and access road was conducted on July 17, 1999, by personnel of La Plata Archaeological Consultants. The project is located on Utah School and Institutional Trust Lands. A total of 9 acres was surveyed. No archaeological sites were encountered during the survey and archaeological clearance is recommended for the proposed well pad and access road.

REFERENCES

Scott, John M.
1991 *Cultural Resources Inventory of Nine Proposed Well Locations and Access for Cockrell Oil Corporation on BLM Lands, Carbon County, Utah.* Metcalf Archaeological Consultants, Eagle, Colorado.

DIVISION OF OIL, GAS AND MINING

APPLICATION FOR PERMIT TO DRILL
STATEMENT OF BASIS

Operator Name: J. M. Huber
Name & Number: Huber State #1-16
API Number: 43-007-30589
Location: 1/4,1/4 NWNE Sec. 16 T. 12 S R. 10 E

Geology/Ground Water:
The setting depth of the surface casing is proposed to be 500' cemented back to surface with 375 sx of premium class G cement. There are 33 points of diversion within 1 mile of this location, which were developed by PG & E, a previous operator, for the produced water from the old plugged wells. All of these are completed in the Blackhawk coal the intended production zone in this well. The several springs and diversions along Willow Creek are not active, and will be protected by the surface casing and the cement at the bottom of the long string. Produced water will be disposed of at an approved disposal facility.

Reviewer: K. Michael Hebertson **Date:** 22 /July /1999

Surface:
The surface at this site has been previously disturbed by the drilling and production of the State 2-16. The location will be expanded from the original to the west about 150' and will be somewhat more stable that the original location, as it sits back from a small drainage that would have required much more stabilization. The Division of Wildlife Resources and SITLA were both notified of the pre-site and declined to attend. However wildlife has asked that an April to July 15 no activity window be added to the usual December to April wildlife restriction, for protection of a Sage Hen strutting area that covers this entire mountain. No other agencies were notified. A search of the records maintained by Division of Water Rights was made and an map of the points of diversion is included with this form. The points of diversion were based on the original letter showing slightly different footages to the well bore. However the results would not be substantially altered, therefore a new map was not prepared.

Reviewer: K. Michael Hebertson **Date:** 22/July /1999

Conditions of Approval/Application for Permit to Drill:
1. Berms will be placed at the toe of all cut and fill slopes.
2. A berm will be placed at the top outside edge of the location pad.
3. The pit will be lined with a minimum 12 Mil synthetic liner.
4. DRW has requested a drilling activity restriction from December - April each year for winter big game season, and from April - July for Sage Hen Strutting and mating season.
5. Produced water will be disposed of in a state approved facility.

Division of Oil, Gas & Mining

OPERATOR: J.M. HUBER CORPORATION (N)

FIELD: CASTLEGATE (ABANDONED) (013)

SEC. 16, TWP 12 S, RNG 10 E,

COUNTY: CARBON CAUSE No.: 220-2 160 ACRES

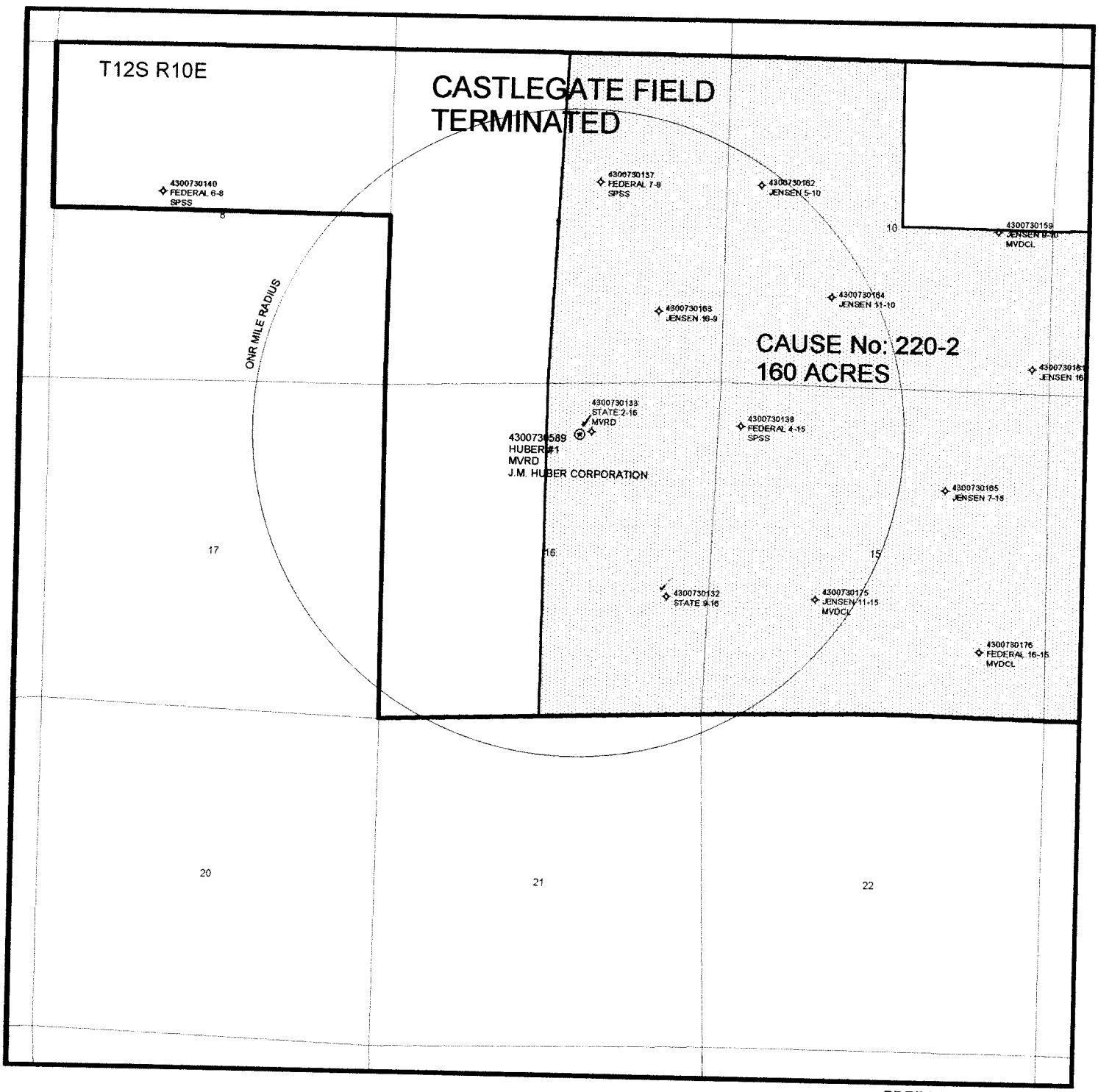

PREPARED
DATE: 22-JULY-1999

July 27, 1999

RECEIVED
JUL 27 1999
DIV OF OIL, GAS & MINING

Michael Herbertson
Department of Natural Resources
Division of Oil, Gas, and Mining
1594 West North Temple, Suite 1210
Box 145801
Salt Lake City, UT 84114-5801

Dear Mr. Herbertson:

On July 27, 1999, John Bird and myself surveyed a proposed road and well site for Huber State 1-16. The museum holds a general statewide surface collecting permit, 99-302. The physical description of the site is Matts Summit 7.5" 1969 edition topographic map, Section 16, T. 12 S., R. 10 E., Carbon County, Utah. We were asked to check for possible paleontological resources at the proposed project site by Permits West, Inc.

No vertebrate or significant or unique invertebrate fossils were seen at the site. Recognized fossils included calcareous algae, gastropods and fragmented mollusks. The rock appears to be lacustrian or lake deposits of the Flagstaff Formation, mostly limestones with some interbedded sandstones. The hillside is a dip slope of a large cuesta with a 10 degree dip to the north.

With this letter I am faxing you a copy of the surface use plan, map, and drawing of well pad and section. I have also included a sketch of the geology of the questa.

In summary, it is my opinion that there are no valuable fossil remains exposed at the well site. Although the Flagstaff is known to contain some fish fossils and uique invertebrate fossils, there were none in evidence at the surface of this proposed project. If you have questions, please contact me at the College of Eastern Utah Prehistoric Museum, 1-800-817-9949.

Sincerely,

Don Burge

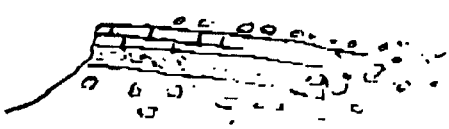

Don Burge, Director
College of Eastern Utah
Prehistoric Museum

Cc: Ed Bonner
Permits West

Surface Use Plan

1. EXISTING ROADS & DIRECTIONS (See PAGES 8 & 9)

From the junction of US 6 and US 191 north of Helper, Utah ...
Go NE 7.5 miles on US 191 to Milepost 165
Then turn left and go NW 0.25 miles on a paved road to a locked gate
Then turn left and follow a lightly graveled road SW for 1.5 miles
Then turn right at orange flagged bushes and follow orange flags N 400'
Then turn left onto a P&A well and go W 200' to the E side of the new well
east edge of old pad to east edge new well

2. ROAD TO BE BUILT OR UPGRADED

The existing road will be graded to remove ruts. The new road will be flat bladed with a 16' wide travel surface. If production results, then all of the road from the well to the pavement will be crowned, ditched, graveled, and culverted where needed. Travel surface will remain 16' and maximum disturbed width will not exceed 50'.

3. EXISTING WELLS

There are 8 P&A wells and 1 water well within a mile radius. There are no existing oil, gas, injection, or disposal wells within a mile.

4. PROPOSED PRODUCTION FACILITIES

Production equipment may include a dehydrator-separator, meter run, and pump. Produced fluids will be piped to an existing central production facility. Facilities will be painted a flat juniper green color.

PERMITS WEST INC
PROVIDING PERMITS FOR ANY USER

-505- 699- 2276

J. M. Huber Corporation
Huber-State 1-16
820' FNL & 2163' FEL
Sec. 16, T. 12 S., R. 10 E.
Carbon County, Utah

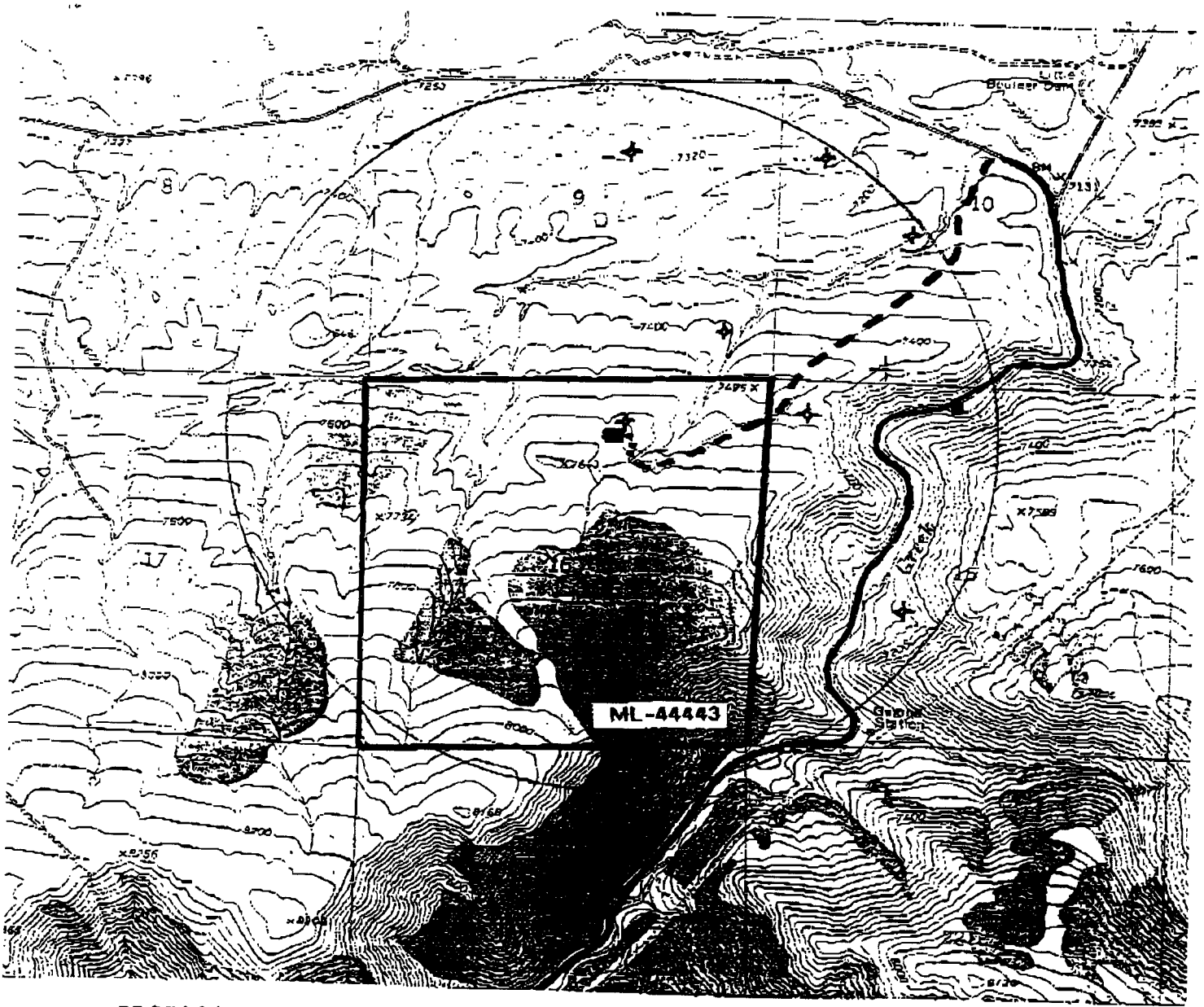

PROPOSED WELL: ■ WATER WELL: ● P&A WELL: ✦
PAVED ROAD: ~ GRAVEL ROAD: NEW ROAD:
LEASE LINE:

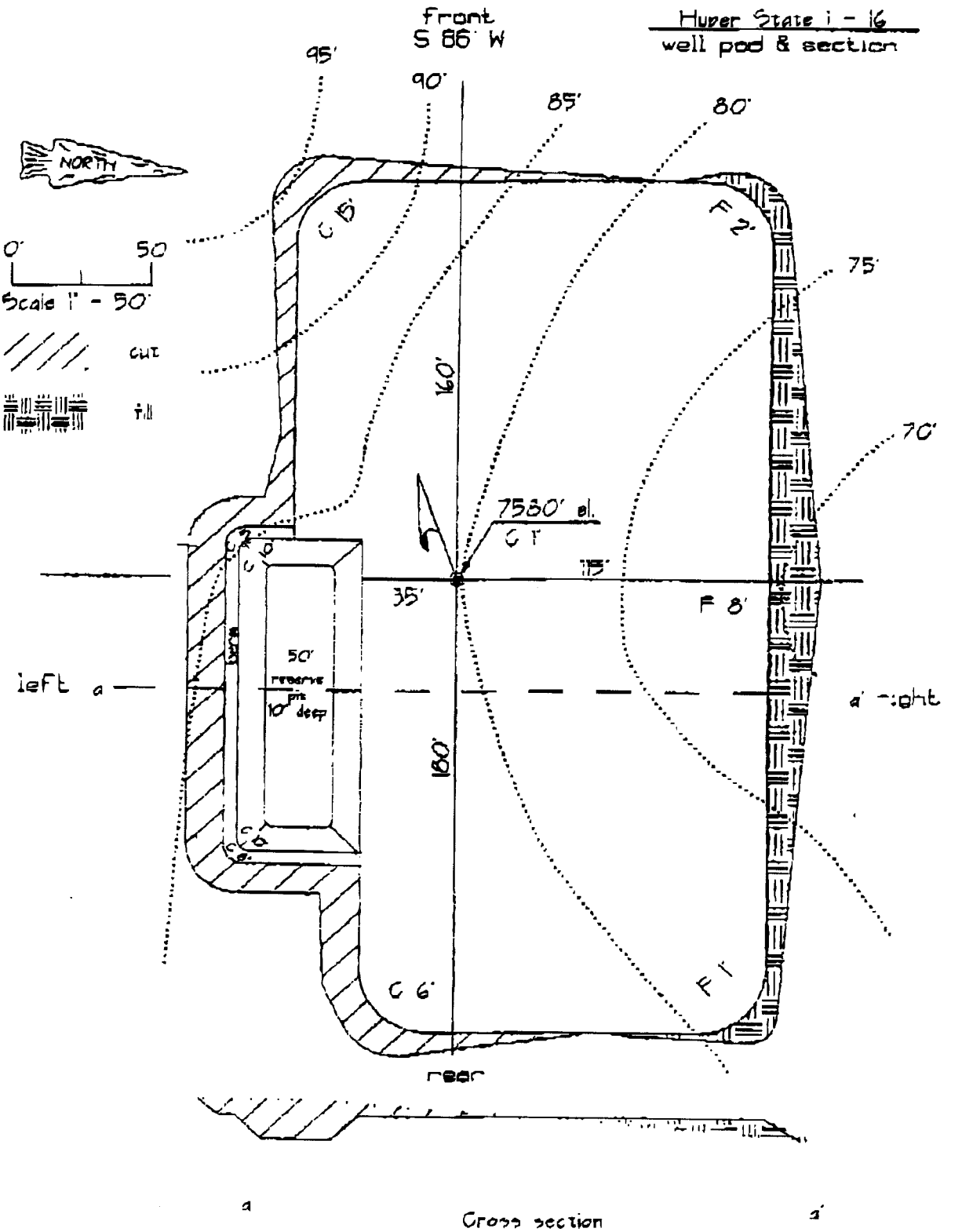

NOTE: CENTER STAKE IS MARKED WITH GREEN STEEL FENCE POST

GWPRF

GROUND WATER PROTECTION
RESEARCH FOUNDATION

MEMORANDUM

To: Gregg Miller – 614 268-4316
Dan Jarvis – 801 359-3940
Mike Stettner – 916-323-0424
Ben Stone – 505 827-1389
Don Drazan – 518 457-9298
Rick Binder – 502 573-0152
Jason Hammock – 870 862-8823
Donna Dill – 316 337-6211
Mark Bohrer – 701 328-8022
Tal Guest – 601 354-6873
Jimmy Hall – 205 349-2861
Steve Wilson – 517 334-6038
Elaine Johnson – 907 276-7542

From: Ben Grunewald
Date: July 27, 1999
Subject: Travel Assistance to Participate in the 1999 Annual Forum Training

We are pleased to inform you that US Department of Energy grant funding awarded to the Ground Water Protection Research Foundation will be available to you for a travel expense scholarship to attend the September 19-22 GWPC Annual Forum. For more detail regarding the agenda, please visit the conference web site at http://gwpc.site.net/meetings.htm.

The GWPRF will provide a $500 scholarship via reimbursement for travel expenses directly to you or to your state agency within 30 days of receiving the expense report form (see attached). Items eligible for reimbursement include:

- Travel expenses including airfare and ground transportation. Reimbursement for rental cars is not included. Each attendee will be responsible for making his/her own transportation arrangements.
- Up to four (4) nights at the conference hotels, September 19 – 22, 1999.
- Expenses for food up to $45 per day.

Additionally, the registration fee to attend the GWPC Annual Forum is waived. If you will be attending, please complete the enclosed form as soon as possible and return it to the GWPC office at (fax #) 405/516-4973.

I look forward to seeing you in Newport!

827 N.W. 63rd Street, Suite 103 • Oklahoma City, Oklahoma 73116 • (405)516-4972 • Fax (516)516-4973

EXPENSE REPORT

NAME	DEPT. OR SALES OFFICE	REPORT DATE	DATE OF TRIP	FROM / /	TO / /
BUSINESS PURPOSE					ACCOUNT NO.

DATE	TRANSPORTATION: AIR, RAIL, BUS, ETC.	TRANSPORTATION: LIMOUSINE, CAR RENTAL, ETC.	AUTOMOBILE EXPENSES ***	LOCAL TAXI, CARFARE, TOLLS, ETC.	LODGING	MEALS (ITEMIZE BUSINESS ***): BREAKFAST	MEALS: LUNCH	MEALS: DINNER	ENTERTAINMENT ***	MISCELLANEOUS ***	TOTAL
SUN /											
MON /											
TUE /											
WED /											
THU /											
FRI /											
SAT /											
TOTAL											

AUTOMOBILE EXPENSES ★★★

DATE	MILEAGE	GAS, PARKING, REPAIRS, SERVICE	AMOUNT

ENTERTAINMENT AND BUSINESS MEALS ONLY ★★★

DATE	ENTERTAINED (NAME, COMPANY, TITLE)	PLACE	BUSINESS PURPOSE	AMOUNT

MISCELLANEOUS EXPENSES ★★★

DATE	DETAIL	AMOUNT

EXPENSE SUMMARY

	AMOUNT
TOTAL EXPENSES REPORTED	
LESS CASH ADVANCE	
TOTAL DUE EMPLOYEE/EMPLOYER	

INSTRUCTIONS

☐ DEDUCT FROM MY ADVANCE

☐ MAIL TO:

SIGNATURE _____ **Expense Report** APPROVED BY _____ DATE _____

Well name:	**799 JM Huber State 1-16**
Operator:	**JM Huber Corp.**
String type:	Surface
Location:	Carbon Co.
Project ID:	43-007-30589

Design parameters:

Collapse

Mud weight: 8.330 ppg

Design is based on evacuated pipe.

Burst

Max anticipated surface pressure: 0 psi

Internal gradient: 0.433 psi/ft

Calculated BHP 216 psi

No backup mud specified.

Minimum design factors:

Collapse:

Design factor 1.125

Burst:

Design factor 1.00

Tension:

8 Round STC:	1.80 (J)
8 Round LTC:	1.80 (J)
Buttress:	1.60 (J)
Premium:	1.50 (J)
Body yield:	1.50 (B)

Tension is based on buoyed weight.

Neutral point: 437 ft

Environment:

H2S considered?	No
Surface temperature:	75 °F
Bottom hole temperature:	82 °F
Temperature gradient:	1.40 °F/100ft
Minimum section length:	300 ft
Cement top:	Surface

Non-directional string.

Re subsequent strings:

Next setting depth:	7,500 ft
Next mud weight:	8.330 ppg
Next setting BHP:	3,245 psi
Fracture mud wt:	19.250 ppg
Fracture depth:	3,865 ft
Injection pressure	3,865 psi

Run Seq	Segment Length (ft)	Size (in)	Nominal Weight (lbs/ft)	Grade	End Finish	True Vert Depth (ft)	Measured Depth (ft)	Drift Diameter (in)	Internal Capacity (ft^3)
1	500	8.625	24.00	J-55	ST&C	500	500	7.972	24.1

Run Seq	Collapse Load (psi)	Collapse Strength (psi)	Collapse Design Factor	Burst Load (psi)	Burst Strength (psi)	Burst Design Factor	Tension Load (Kips)	Tension Strength (Kips)	Tension Design Factor
1	216	1370	6.33	216	2950	13.63	10	244	23.24 J

Prepared by: RJK
Utah Dept. of Natural Resources

Date: July 28,1999
Salt Lake City, Utah

ENGINEERING STIPULATIONS: NONE
Collapse strength is based on the Westcott, Dunlop & Kemler method of biaxial correction for tension.
Collapse is based on a vertical depth of 500 ft, a mud weight of 8.33 ppg The casing is considered to be evacuated for collapse purposes.
Burst strength is not adjusted for tension.

Engineering responsibility for use of this design will be that of the purchaser.

Well name:	**799 JM Huber State 1-16**
Operator:	**JM Huber Corp.**
String type:	Production
Location:	Carbon Co.
Project ID:	43-007-30589

Design parameters:

Collapse

Mud weight: 8.330 ppg

Design is based on evacuated pipe.

Burst

Max anticipated surface pressure: 0 psi

Internal gradient: 0.433 psi/ft

Calculated BHP 2,164 psi

No backup mud specified.

Minimum design factors:

Collapse:

Design factor 1.125

Burst:

Design factor 1.00

Tension:

8 Round STC:	1.80 (J)
8 Round LTC:	1.80 (J)
Buttress:	1.60 (J)
Premium:	1.50 (J)
Body yield:	1.50 (B)

Tension is based on buoyed weight.

Neutral point: 4,377 ft

Environment:

H2S considered?	No
Surface temperature:	75 °F
Bottom hole temperature:	145 °F
Temperature gradient:	1.40 °F/100ft
Minimum section length:	368 ft
Cement top:	2,675 ft

Non-directional string.

Run Seq	Segment Length (ft)	Size (in)	Nominal Weight (lbs/ft)	Grade	End Finish	True Vert Depth (ft)	Measured Depth (ft)	Drift Diameter (in)	Internal Capacity (ft^3)
1	5000	5.5	14.00	J-55	ST&C	5000	5000	4.887	139.9

Run Seq	Collapse Load (psi)	Collapse Strength (psi)	Collapse Design Factor	Burst Load (psi)	Burst Strength (psi)	Burst Design Factor	Tension Load (Kips)	Tension Strength (Kips)	Tension Design Factor
1	2164	3120	1.44	2164	4270	1.97	61	172	2.81 J

Prepared by: RJK
Utah Dept. of Natural Resources

Date: July 28,1999
Salt Lake City, Utah

ENGINEERING STIPULATIONS: NONE

Collapse strength is based on the Westcott, Dunlop & Kemler method of biaxial correction for tension.

Collapse is based on a vertical depth of 5000 ft, a mud weight of 8.33 ppg The casing is considered to be evacuated for collapse purposes.

Burst strength is not adjusted for tension.

Engineering responsibility for use of this design will be that of the purchaser.

799 JM Huber State 1-16

Casing Schematic

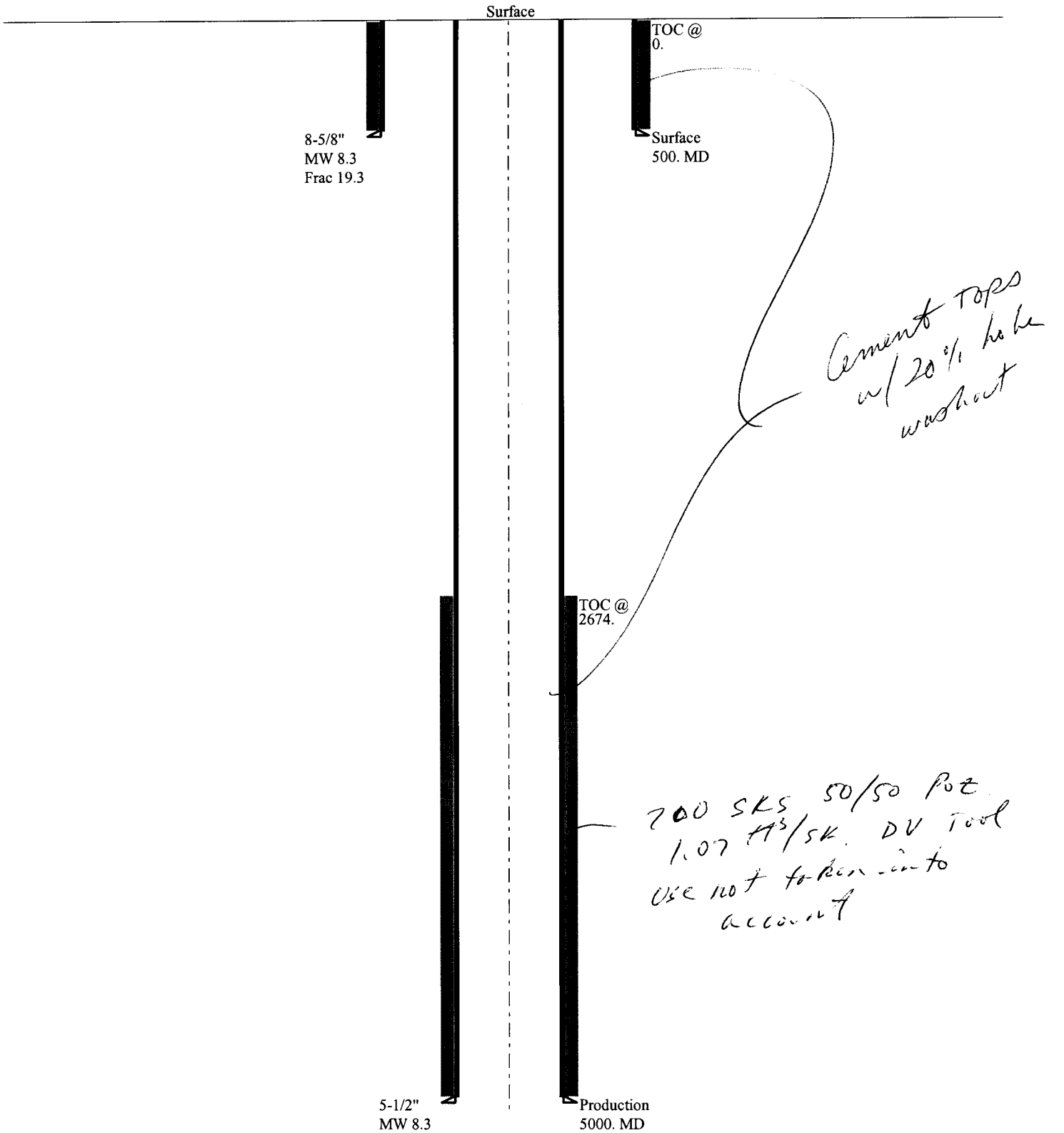

PERMITS WEST, INC.
PROVIDING PERMITS for LAND USERS
37 Verano Loop, Santa Fe, New Mexico 87505 (505) 466-8120

July 27, 1999

To: Mike Hebertson

Fr: Brian Wood

Re: Huber's State 1-16

Attached are the archaeologist's and paleontologist's conclusions for the well. Nothing significant was found.

I will be flying into Salt Lake Wednesday evening. The bond is due to arrive via FedEx Thursday morning. I will walk it through State Lands for approval and bring it to you Thursday afternoon.

Please let me know if there is anything else you need.

RECEIVED
JUL 29 1999
DIV OF OIL, GAS & MINING

LA PLATA ARCHAEOLOGICAL CONSULTANTS

July 19, 1999

Mr. Kenny Wintch, Archaeologist
Utah School and Institutional Trust Lands Administration
675 East 500 South, Suite 500
Salt Lake City, Utah 84102-2818

Dear Kenny:

Please find enclosed two copies of a report that I prepared for a project in Carbon County, Utah. The project is located on Utah School and Institutional Trust Lands and is for a single drilling location which is being proposed by J. M. Huber Corporation. There is no other government involvement in the project. No sites were encountered and archaeological clearance is recommended for the project.

If you have any questions or need further information, please let me know.

Sincerely,

Steven L. Fuller

Enclosures

cc: Scott Zimmerman, J.. M. Huber Corp.
Brian Wood, Permits West
Mike Hebertson, Utah Division of Oil, Gas, and Mining

26851 County Road P • Dolores, Colorado 81323
Office (970) 565 • 8708 • Mobile (970) 749 • 0056 • Fax (970) 882-2224

7-27-1999 6:08PM FROM PERMITS WEST, INC 505 466 9682 P.2

July 27, 1999

Ed Bonner
Utah Trust Lands Administration
675 East 500 South, Suite 500
Salt Lake City, UT 84102

Dear Mr. Bonner:

On July 27, 1999, John Bird and myself surveyed a proposed road and well site for Huber State 1-16 The museum holds a general statewide surface collecting permit, 99-302. The physical description of the site is Matts Summit 7.5" 1969 edition topographic map, Section 16, T 12 S., R. 10 E., Carbon County, Utah. We were asked to check for possible paleontological resources at the proposed project site by Permits West, Inc.

No vertebrate or significant or unique invertebrate fossils were seen at the site. Recognized fossils included calcareous algae, gastropods and fragmented mollusks. The rock appears to be lacustrian or lake deposits of the Flagstaff Formation, mostly limestones with some interbedded sandstones. The hillside is a dip slope of a large cuesta with a 10 degree dip to the north.

With this letter I am faxing you a copy of the surface use plan, map, and drawing of well pad and section. I have also included a sketch of the geology of the questa.

In summary, it is my opinion that there are no valuable fossil remains exposed at the well site. Although the Flagstaff is known to contain some fish fossils and uique invertebrate fossils, there were none in evidence at the surface of this proposed project. If you have questions, please contact me at the College of Eastern Utah Prehistoric Museum, 1-800-817-9949.

Sincerely,

Don Burge

Don Burge, Director
College of Eastern Utah
Prehistoric Museum

Cc: Michael Herbertson
Permits West

WORKSHEET
APPLICATION FOR PERMIT TO DRILL

APD RECEIVED: 07/20/1999

API NO. ASSIGNED: 43-007-30589

WELL NAME: HUBER-STATE 1-16
OPERATOR: J M HUBER CORPORATION () N2380
CONTACT: Brian Wood (505) 466-8120

PROPOSED LOCATION:
NWNE 16 - T12S - R10E
SURFACE: 0820-FNL-2163-FEL
BOTTOM: 0820-FNL-2163-FEL
CARBON COUNTY
CASTLEGATE FIELD (013)

LEASE TYPE: STA
LEASE NUMBER: ML-44443
SURFACE OWNER: State

PROPOSED FORMATION: BLHWK

INSPECT LOCATN BY: / /		
TECH REVIEW	Initials	Date
Engineering	RDK	7-28-99
Geology		
Surface		

RECEIVED AND/OR REVIEWED:

✓ Plat
✓ Bond: Fed[] Ind[] Sta[✓] Fee[]
(No. #929103264)
N Potash (Y/N)
N Oil Shale (Y/N) *190-5(B)
✓ Water Permit
(No. #91-4983)
N RDCC Review (Y/N)
(Date:)

N/A Fee Surf Agreement (Y/N)

LOCATION AND SITING:

___ R649-2-3. Unit ___

___ R649-3-2. General

___ R649-3-3. Exception

✓ Drilling Unit
Board Cause No: 220-2 (160')
Date: 7-9-93

___ R649-3-11. Directional Drill

COMMENTS: Need Presite. (Conducted 7-15-99)

STIPULATIONS: (1) STATEMENT OF BASIS

Michael O. Leavitt
Governor
Kathleen Clarke
Executive Director
Lowell P. Braxton
Division Director

State of Utah

DEPARTMENT OF NATURAL RESOURCES
DIVISION OF OIL, GAS AND MINING

1594 West North Temple, Suite 1210
PO Box 145801
Salt Lake City, Utah 84114-5801
801-538-5340
801-359-3940 (Fax)
801-538-7223 (TDD)

July 29, 1999

J. M. Huber Corporation
1050 17th Street, Suite 1850
Denver, Colorado 80265

Re: Huber-State 1-16 Well, 820' FNL, 2163' FEL, NW NE, Sec. 16, T. 12 S., R. 10 E., Carbon County, Utah

Gentlemen:

Pursuant to the provisions and requirements of Utah Code Ann. 40-6-1 et seq., Utah Administrative Code R649-3-1 et seq., and the attached Conditions of Approval, approval to drill the referenced well is granted.

This approval shall expire one year from the above date unless substantial and continuous operation is underway, or a request for extension is made prior to the expiration date. The API identification number assigned to this well is 43-007-30589.

Sincerely,

John R. Baza
Associate Director

lwp
Enclosures
cc: Carbon County Assessor
Bureau of Land Management, Moab District Office

Operator: J. M. Huber Corporation

Well Name & Number: Huber-State 1-16

API Number: 43-007-30589

Lease: State **Surface Owner:** State

Location: NW NE **Sec.** 16 **T.** 12 S. **R.** 10 E.

Conditions of Approval

1. General

   Compliance with the requirements of Utah Admin. R. 649-1 et seq., the Oil and Gas Conservation General Rules, and the applicable terms and provisions of the approved Application for Permit to Drill.

2. Notification Requirements

   Notify the Division of the following actions during drilling of this well:

   - 24 hours prior to cementing or testing casing
   - 24 hours prior to testing blowout prevention equipment
   - 24 hours prior to spudding the well
   - within 24 hours of any emergency changes made to the approved drilling program
   - prior to commencing operations to plug and abandon the well

   Division contacts (please leave a voice mail message if person is not available to take the call):

   - Dan Jarvis at (801) 538-5338
   - Robert Krueger at (801) 538-5274 (plugging)
   - Carol Daniels at (801) 538-5284 (spud)

3. Reporting Requirements

   All required reports, forms and submittals shall be promptly filed with the Division, including but not limited to the Entity Action Form (Form 6), Report of Water Encountered During Drilling (Form 7), Weekly Progress Reports for drilling and completion operations, and Sundry Notices and Reports on Wells requesting approval of change of plans or other operational actions.

4. Compliance with the Conditions of Approval/Application for Permit to Drill outlined in the Statement of Basis (copy attached).

DIVISION OF OIL, GAS AND MINING

SPUDDING INFORMATION

Name of Company: J M HUBER CORPORATION

Well Name: HUBER-STATE-1-16

Api No. 43-007-30589 Lease Type: STATE

Secton 16 Township 12S Range 10E County CARBON

Drilling Contractor KEY ENERGY RIG # 44

SPUDDED:

Date 07/30/99

Time 6:00 AM

How ROTARY

Drilling will commence

Reported by RICK MARSHALL (CONSULTANT)

Telephone # 1-435-637-8880(PRICE HOLIDAY INN)970-799-2973 (MOBIL PHONE

Date 08/02/99 Signed: CHD

HUBER

A FAMILY OF SOLUTIONS

ENERGY

J.M. Huber Corporation

1900 West Loop South
Suite 1600
Houston, TX 77027

phone: (713) 871-4545
fax: (713) 871-4422
e-mail: htcdm@huber.com

www.huber.com

CONFIDENTIAL

March 7, 2000

RECEIVED

MAR 13 2000

DIVISION OF
OIL, GAS AND MINING

State of Utah
Department of Natural Resources
Division of Oil, Gas and Mining
P. O. Box 145801
Salt Lake City, Utah 84114-5801

Re: Form 8
Huber-State No. 1-16 (Sec. 16, T12S-R10E)
Huber-Jensen No. 1-10 (Sec. 10, T12S-R10E)
Carbon County, Utah

Gentlemen:

Please find attached one original well completion report (Form 8) for each of the referenced wells that were recently completed. Also find enclosed the following logs:

Huber-Jensen No. 1-10: Cement Bond Log, Acoustic Cement Bond Log, & Reservoir Saturation Collar Locator Gamma Ray - Logs filed in Log File

Huber-State No. 1-16: Spectral Density Dual Spaced Neutron Enhanced Vertical, Dual Induction Short Guard, Spectral Density Dual Spaced Neutron, & Reservoir Saturation Collar Locator Gamma Ray Logs filed in Log File

We would like to request that the logs be kept confidential for a period of one year. Thank you. Should you have any questions, please do not hesitate to call me at 713/871-4545.

Very truly yours,

J. M. HUBER CORPORATION

Issa D. Machon

Issa D. Machon
Engineering/ Geoscientist Technician
Coalbed Methane

/im
Attachments

INSPECTION FORM 1STATE OF UTAH
DIVISION OF OIL GAS AND MINING

DRILLING OPERATIONS

Well Name: HUBER STATE #1-16 API Number: 43-007-30589
Qtr/Qtr: NW/NE Section: 16 Township: 12S Range: 10E
Company Name: HUBER CORPORATION

Lease: State X Fee Federal Indian
Inspector: DENNIS .L. INGRAM Date: AUGUST 23,1999

Inspection made in accordance with Division Inspection Standards and Procedures for drilling operations, any exceptions noted in comments.

Depth at time of visit: 4535 T.D. Last BOPE test recorded: N/A
Drilling Contractor: KEY ENERGY Rig No. #44

COMMENTS: NO WELL SIGN. APD IS GONE WITH COMPANY AS THE WELL IS TOTAL DEPTH. OPERATOR RAN 4518' (107 JOINTS) OF 5 ½" #17 PRODUCTION CASING AND CEMENTED SAME WITH A TWO-STAGE CEMENT JOB; STAGE COLLAR WAS @ 3800'. RESERVE PIT IS LINED AND FENCED AND ON EAST SIDE OF LOCATION IN CUT. DAVE (THE TOOL PUSHER) SAYS THIS RIG IS GOING BACK TO COLORADO AND HUBER WILL BRING IN A DIFFERENT RIG TO DRILL THE NEXT HOLE. RICK MARSHALL IS THE COMPANY REP.
OFFICE (970)385-7747
MOBIL (970)749-2973
COMBO TO GATE: 7900

RECEIVED

MAR 13 2000

DIVISION OF OIL, GAS AND MINING

CONFIDENTIAL

FORM 8

STATE OF UTAH
DIVISION OF OIL, GAS AND MINING

WELL COMPLETION OR RECOMPLETION REPORT AND LOG

1a. TYPE OF WELL: OIL WELL ☐ GAS WELL ☒ DRY ☐ Other CONFIDENTIAL PERIOD EXPIRED ON 01-14-2001

b. TYPE OF COMPLETION: NEW WELL ☒ WORK OVER ☐ DEEP-EN ☐ PLUG BACK ☐ DIFF. RESVR. ☐ Other

2. NAME OF OPERATOR: J. M. Huber Corporation

3. ADDRESS OF OPERATOR: 1050 17th Street, Suite 1850, Denver, CO 80265

4. LOCATION OF WELL (Report location clearly and in accordance with any State requirements)
At surface: 820' FNL & 2163' FEL
At top prod. interval reported below:
At total depth:

5. LEASE DESIGNATION AND SERIAL NO.: U-44443
6. IF INDIAN, ALLOTTEE OR TRIBE NAME: N/A
7. UNIT AGREEMENT NAME: N/A
8. FARM OR LEASE NAME: Huber-State
9. WELL NO.: 1-16
10. FIELD AND POOL, OR WILDCAT: Castlegate
11. SEC., T., R., M., OR BLOCK AND SURVEY OR AREA: NWNE 16-12S-10E

14. API NO.	DATE ISSUED	12. COUNTY	13. STATE
43-007-30589	7/29/99	Carbon	Utah

15. DATE SPUDDED	16. DATE T.D. REACHED	17. DATE COMPL. (Ready to prod.) or (Plug & Abd.)	18. ELEVATIONS (DF, RKB, RT, GR, ETC.)	19. ELEV. CASINGHEAD
7/31/99	8/21/99	12/14/99	7592 KB	7580 GL

20. TOTAL DEPTH, MD & TVD	21. PLUG BACK T.D., MD & TVD	22. IF MULTIPLE COMPL., HOW MANY	23. INTERVALS DRILLED BY	ROTARY TOOLS	CABLE TOOLS
4535	4498		→	X	

24. PRODUCING INTERVAL(S), OF THIS COMPLETION—TOP, BOTTOM, NAME (MD AND TVD): Blackhawk Coals: 4242' - 4465' KB

25. WAS DIRECTIONAL SURVEY MADE: Single Shot Survey 6-1/4 deg. @ 4497' KB

26. TYPE ELECTRIC AND OTHER LOGS RUN: Dual Induc. Short Guard, Spectral Density D.S. Neutron, & Spectral Den. D.S. Neutron Enhanced Vert.

WAS WELL CORED YES ☒ NO ☐ (Submit analysis) No recovery
DRILL STEM TEST YES ☐ NO ☒ (See reverse side)

28. CASING RECORD (Report all strings set in well)

CASING SIZE	WEIGHT, LB./FT.	DEPTH SET (MD)	HOLE SIZE	CEMENTING RECORD	AMOUNT PULLED
8.625	23	543	12.25	409 sx Prem. Plus Cement	
5.5	17	4513	7.875	225 sx Prem. "G" Cement (1st Stage)	
	Note: DV Tool @ 3668' KB			1350 sx Class "G" Cement	
				tailed w/50 sx Prem. Cement (2nd Stage)	

29. LINER RECORD

SIZE	TOP (MD)	BOTTOM (MD)	SACKS CEMENT	SCREEN (MD)

30. TUBING RECORD

SIZE	DEPTH SET (MD)	PACKER SET (MD)
2-7/8"	4397.14	

31. PERFORATION RECORD (Interval, size and number)
4242-48 KB 4422-26 KB w/4 JSPF (0.50")
4268-78 KB 4456-65 KB "
4381-84 KB "
4390-94 KB "
4400-02 KB "

32. ACID, SHOT, FRACTURE, CEMENT SQUEEZE, ETC.

DEPTH INTERVAL (MD)	AMOUNT AND KIND OF MATERIAL USED
4381-4465	38,220 gal 20# Delta Frac 140, 90,000 lbs 12/20 Ottawa Sand
4242-4278	33,360 gals 20# Delta Frac Fluid w/ sandwedge, 42,500 lbs 12/20 mesh Ottawa Sand

33. PRODUCTION

DATE FIRST PRODUCTION	PRODUCTION METHOD (Flowing, gas lift, pumping—size and type of pump)	WELL STATUS (Producing or shut-in)
12/14/99	Pumping 2 3/4" Wilson Pump	Producing

DATE OF TEST	HOURS TESTED	CHOKE SIZE	PROD'N. FOR TEST PERIOD	OIL—BBL.	GAS—MCF.	WATER—BBL.	GAS-OIL RATIO
1/17/00	24	N/A	→	0	102	191	N/A

FLOW. TUBING PRESS.	CASING PRESSURE	CALCULATED 24-HOUR RATE	OIL—BBL.	GAS—MCF.	WATER—BBL.	OIL GRAVITY-API (CORR.)
35 psig	30 psig	→				

34. DISPOSITION OF GAS (Sold, used for fuel, vented, etc.): Sold

TEST WITNESSED BY: Thomas M. Erwen

35. LIST OF ATTACHMENTS

36. I hereby certify that the foregoing and attached information is complete and correct as determined from all available records

SIGNED Ina D. Machor TITLE Engr./Geoscientist Tech. DATE 3/6/00

See Spaces for Additional Data on Reverse Side

(3/89)

INSTRUCTIONS

This form should be completed in compliance with the Utah Oil and Gas Conservation General Rules. If not filed prior to this time, all logs, tests, and directional surveys as required by Utah Rules should be attached and submitted with this report.

ITEM 18: Indicate which elevation is used as reference for depth measurements given in other spaces on this form and on any attachments.

ITEMS 22 and 24: If this well is completed for separate production from more than one interval zone (multiple completion), so state in item 22, and in item 24 show the producinginterval, or intervals, top(s), bottom(s) and name(s) for only the interval reported in item 33. Submit a separate report (page) on this form, adequately identified, for each additional interval to be separately produced, showing the additional data pertinent to such interval.

ITEM 29: "Sacks Cement": Attached supplemental records for this well should show the details of any multiple stage cementing and the location of the cementing tool.

ITEM 33: Submit a separate completion report on this form for each interval to be separately produced (see instruction for items 22 and 24 above).

37. SUMMARY OF POROUS ZONES:
Show all important zones of porosity and contents thereof; cored intervals; and all drill-stem tests, including depth interval tested, cushion used, time tool open, flowing and shut-in pressures, and recoveries.

Formation	Top	Bottom	Description, contents, etc.
Black Hawk	3582'	4488'	Natural Gas
Aberdeen Sandstone	4488'	4535'TD	Wet

38. GEOLOGIC MARKERS

Name	Top Meas. Depth	Top True Vert.Depth
Price River Sandstone		2460'
Castlegate Sandstone		3144'
Black Hawk		3582'
Kenilworth Sandstone		4325'
Aberdeen Sandstone		4488'

DIV. OF OIL, GAS AND MINING

ENTITY ACTION FORM - FORM 6

OPERATOR J. M. HUBER CORP.
ADDRESS 1050 17TH ST #1850
DENVER CO 80265

OPERATOR ACCT. NO. H 2380

ACTION CODE	CURRENT ENTITY NO.	NEW ENTITY NO.	API NUMBER	WELL NAME	WELL LOCATION QQ	SC	TP	RG	COUNTY	SPUD DATE	EFFECTIVE DATE
A	99999	12610	43-007-30599	HUBER STATE 1-16	NWNE	16	12S	10E	CARBON	7-31-99	
WELL 1 COMMENTS: 991029 entity added. KDR											
A	99999	12611	43-007-30596	HUBER-JENSEN 1-10	NWSW	10	12S	10E	CARBON	10-1-99	
WELL 2 COMMENTS: 991029 entity added. KDR											
WELL 3 COMMENTS:											
WELL 4 COMMENTS:											
WELL 5 COMMENTS:											

ACTION CODES (See instructions on back of form)
- A - Establish new entity for new well (single well only)
- B - Add new well to existing entity (group or unit well)
- C - Re-assign well from one existing entity to another existing entity
- D - Re-assign well from one existing entity to a new entity
- E - Other (explain in comments section)

NOTE: Use COMMENT section to explain why each Action Code was selected.

(3/89)

Melinda D Lachin
Signature

ENG. TECH.
Title

10-27-99
Date

Phone No. 303 825-7900

Division of Oil, Gas and Mining

OPERATOR CHANGE WORKSHEET

ROUTING
1. GLH
2. CDW
3. FILE

X Change of Operator (Well Sold) — Designation of Agent/Operator

Operator Name Change — Merger

The operator of the well(s) listed below has changed, effective: **12/1/2003**

FROM: (Old Operator):	TO: (New Operator):
N2380-J.M. Huber Corp 1050 17th St, Ste. 700 Denver, CO 80265	N2545-Evergreen Operating Corp. 1401 17th Street, Suite 1200 Denver, CO 80202
Phone: 1-(303) 825-7900	Phone: 1-(303) 298-8100

CA No. **Unit:**

WELL(S)

NAME	SEC	TWN	RNG	API NO	ENTITY NO	LEASE TYPE	WELL TYPE	WELL STATUS
HUBER-JENSEN 1-4	04	120S	100E	4300730733	13068	Fee	GW	P
HUBER-JENSEN 2-8	08	120S	100E	4300730734	13275	Fee	GW	P
HUBER-JENSEN 1-8	08	120S	100E	4300730768	13359	Fee	GW	P
HUBER-JENSEN 16-9	09	120S	100E	4300730163	12904	Fee	GW	P
HUBER-JENSEN 1-9	09	120S	100E	4300730717	12903	Fee	GW	P
HUBER-JENSEN 2-9	09	120S	100E	4300730735	13317	Fee	GW	P
HUBER-JENSEN 9-10	10	120S	100E	4300730159	12906	Fee	GW	P
HUBER-JENSEN 5-10	10	120S	100E	4300730162	12905	Fee	GW	P
HUBER-JENSEN 1-10	10	120S	100E	4300730596	12611	Fee	GW	P
HUBER-SHIMMIN TRUST 2-11	11	120S	100E	4300730659	13070	Fee	GW	P
HUBER-SHIMMIN TRUST 1-11	11	120S	100E	4300730673	12901	Fee	GW	P
HUBER-SHIMMIN TRUST 1-12	12	120S	100E	4300730674	12902	Fee	GW	P
HUBER-SHIMMIN TRUST 3-14	14	120S	100E	4300730640	13069	Fee	GW	P
HUBER-SHIMMIN TRUST 4-14	14	120S	100E	4300730662	13071	Fee	GW	P
HUBER-JENSEN 1-15	15	120S	100E	4300730736	13072	Fee	GW	P
HUBER-STATE 1-16	16	120S	100E	4300730589	12610	State	GW	P
HUBER-ST 4-16	16	120S	100E	4300730785	13318	State	GW	P

OPERATOR CHANGES DOCUMENTATION

Enter date after each listed item is completed

1. (R649-8-10) Sundry or legal documentation was received from the **FORMER** operator on: 1/22/2004
2. (R649-8-10) Sundry or legal documentation was received from the **NEW** operator on: 1/22/2004
3. The new company was checked on the **Department of Commerce, Division of Corporations Database on:** 12/29/2003
4. Is the new operator registered in the State of Utah: YES Business Number: 5531527-0143
5. If NO, the operator was contacted contacted on: _____

17

6. (R649-9-2)Waste Management Plan has been received on: In Place

7. **Federal and Indian Lease Wells:** The BLM and or the BIA has approved the merger, name change, or operator change for all wells listed on Federal or Indian leases on: BLM BIA

8. **Federal and Indian Units:**
The BLM or BIA has approved the successor of unit operator for wells listed on: n/a

9. **Federal and Indian Communization Agreements ("CA"):**
The BLM or BIA has approved the operator for all wells listed within a CA on: n/a

10. **Underground Injection Control ("UIC")** The Division has approved UIC Form 5, **Transfer of Authority to Inject,** for the enhanced/secondary recovery unit/project for the water disposal well(s) listed on: N/A

DATA ENTRY:

1. Changes entered in the **Oil and Gas Database on:** 1/28/2004
2. Changes have been entered on the **Monthly Operator Change Spread Sheet on:** 1/28/2004
3. Bond information entered in RBDMS on: N/A
4. Fee wells attached to bond in RBDMS on: N/A
5. Injection Projects to new operator in RBDMS on: n/a

STATE WELL(S) BOND VERIFICATION:

1. State well(s) covered by Bond Number: RLB0006732

FEDERAL WELL(S) BOND VERIFICATION:

1. Federal well(s) covered by Bond Number: n/a

INDIAN WELL(S) BOND VERIFICATION:

1. Indian well(s) covered by Bond Number: n/a

FEE WELL(S) BOND VERIFICATION:

1. (R649-3-1) The **NEW** operator of any fee well(s) listed covered by Bond Number RLB0006706
2. The **FORMER** operator has requested a release of liability from their bond on: N/A
The Division sent response by letter on: N/A

LEASE INTEREST OWNER NOTIFICATION:

3. (R649-2-10) The **FORMER** operator of the fee wells has been contacted and informed by a letter from the Division of their responsibility to notify all interest owners of this change on: N/A

COMMENTS:

STATE OF UTAH
DEPARTMENT OF NATURAL RESOURCES
DIVISION OF OIL, GAS AND MINING

FORM 9

SUNDRY NOTICES AND REPORTS ON WELLS

Do not use this form for proposals to drill new wells, significantly deepen existing wells below current bottom-hole depth, reenter plugged wells, or to drill horizontal laterals. Use APPLICATION FOR PERMIT TO DRILL form for such proposals.

5. LEASE DESIGNATION AND SERIAL NUMBER: ML-44443
6. IF INDIAN, ALLOTTEE OR TRIBE NAME: NA
7. UNIT or CA AGREEMENT NAME: NA
8. WELL NAME and NUMBER: Huber State 1-16
9. API NUMBER: 43-7-30589
10. FIELD AND POOL, OR WILDCAT: Castlegate

1. TYPE OF WELL: OIL WELL ☐ GAS WELL ☑ OTHER _____

2. NAME OF OPERATOR: J. M. Huber Corp.

3. ADDRESS OF OPERATOR: 1050 17th St., Ste 700 CITY Denver STATE CO ZIP 80265 PHONE NUMBER: (303) 825-7900

4. LOCATION OF WELL
FOOTAGES AT SURFACE: 820'FNL, 2163'FEL COUNTY: Carbon
QTR/QTR, SECTION, TOWNSHIP, RANGE, MERIDIAN: NWNE 16 12S 10E S STATE: UTAH

11. CHECK APPROPRIATE BOXES TO INDICATE NATURE OF NOTICE, REPORT, OR OTHER DATA

TYPE OF SUBMISSION	TYPE OF ACTION		
☐ NOTICE OF INTENT (Submit in Duplicate)	☐ ACIDIZE	☐ DEEPEN	☐ REPERFORATE CURRENT FORMATION
Approximate date work will start: _____	☐ ALTER CASING	☐ FRACTURE TREAT	☐ SIDETRACK TO REPAIR WELL
	☐ CASING REPAIR	☐ NEW CONSTRUCTION	☐ TEMPORARILY ABANDON
	☐ CHANGE TO PREVIOUS PLANS	☑ OPERATOR CHANGE	☐ TUBING REPAIR
	☐ CHANGE TUBING	☐ PLUG AND ABANDON	☐ VENT OR FLARE
☑ SUBSEQUENT REPORT (Submit Original Form Only)	☐ CHANGE WELL NAME	☐ PLUG BACK	☐ WATER DISPOSAL
Date of work completion:	☐ CHANGE WELL STATUS	☐ PRODUCTION (START/RESUME)	☐ WATER SHUT-OFF
	☐ COMMINGLE PRODUCING FORMATIONS	☐ RECLAMATION OF WELL SITE	☐ OTHER: _____
_____	☐ CONVERT WELL TYPE	☐ RECOMPLETE - DIFFERENT FORMATION	

12. DESCRIBE PROPOSED OR COMPLETED OPERATIONS. Clearly show all pertinent details including dates, depths, volumes, etc.

See Attached Sheet

NAME (PLEASE PRINT) Robert F. Unger TITLE V.P.-Northern Business Unit of J. M. Huber Corp.

SIGNATURE [signature] DATE 11/20/03

(This space for State use only)

RECEIVED
JAN 2 2 2004
DIV. OF OIL, GAS & MINING

1890-116

(5/2000) (See Instructions on Reverse Side)

Attachment for the State of Utah, Department of Natural Resources, Division of Oil, Gas and Mining, Form 9, Sundry Notices and Reports on Wells:

Huber State 1-16

J. M. Huber Corporation has sold its interests in this well and property. The new owner will be taking on the responsibility of operator.

Name (please print) Robert F. Unger Title: V. P.-Northern Business Unit

Signature: Date: 11/20/03

New owner information:

Company Name: Evergreen Operating Corp., 1401 17th Street, Suite 1200
Denver, CO 80202

Name (please print) Kevin D. Davis Title: Director- Mergers & Acquisitions

Signature: Date: 1/15/2004

New owner bond number: RLB0006706

Form 9

STATE OF UTAH
DEPARTMENT OF NATURAL RESOURCES
DIVISION OF OIL, GAS AND MINING

SUNDRY NOTICES AND REPORTS ON WELLS

Do not use this form for proposals to drill new wells, deepen existing wells, or to reenter plugged and abandoned wells.
Use APPLICATION FOR PERMIT – for such proposals

6. Lease Designation and Serial Number: *ML-44443*
7. Indian Allottee or Tribe Name: *na*
8. Unit or Communitization Agreement: *na*
9. Well Name and Number: *Huber State 1-16*
10. API Well Number: *43-007-30589*
11. Field and Pool, or Wildcat: *Castlegate*

1. Type of Well
[ ] Oil Well [x] Gas Well [ ] Other (specify) *2*

2. Name of Operator
Evergreen Operating Corporation

3. Address of Operator
1401 17th St., Suite 1200, Denver, Colorado 80202

4. Telephone Number
303-298-8100

5. Location of Well
Footage : 820' FNL & 2163' FEL
QQ, Sec, T., R., M : nwne, Section 16, T12S-R10E
County : *Carbon*
State : *Utah*

12. **CHECK APPROPRIATE BOXES TO INDICATE NATURE OF NOTICE, REPORT, OR OTHER DATA**

NOTICE OF INTENT
(Submit in Duplicate)

- [ ] Abandonment
- [ ] Casing Repair
- [ ] Change of Plans
- [ ] Conversion to Injection
- [x] Fracture Treat
- [ ] Multiple Completion
- [x] Other *add perforations*
- [ ] New Construction
- [ ] Pull or Alter Casing
- [ ] Recompletion
- [ ] Shoot or Acidize
- [ ] Vent or Flare
- [ ] Water Shut-Off

Approximate Date Work Will Start *May 12, 2004*

SUBSEQUENT REPORT
(Submit Original Form Only)

- [ ] Abandonment *
- [ ] Casing Repair
- [ ] Change of Plans
- [ ] Conversion to Injection
- [ ] Fracture Treat
- [ ] Other
- [ ] New Construction
- [ ] Pull or Alter Casing
- [ ] Shoot or Acidize
- [ ] Vent or Flare
- [ ] Water Shut-Off

Date of Work Completion

Report results of Multiple Completions and Recompletions to different reservoirs on WELL COMPLETION OR RECOMPLETION AND LOG form.
* Must be accompanied by a cement verification report.

13. DESCRIBE PROPOSED OR COMPLETED OPERATIONS (Clearly state all pertinent details, and give pertinent dates. If well is directionally drilled, give subsurface locations and measured and true vertical depths for all markers and zones pertinent to this work.)

Evergreen Operating Corporation intends to re-fracture stimulate the existing perforated interval in the Blackhawk coals using coiled tubing. The existing perforations in the Blackhawk coal interval are 4242' - 4248', 4268' - 4278', 4381' - 4384', 4390' - 4394', 4400' - 4404', 4422' - 4426', and 4456' - 4464'. In addition the interval 4290' - 4294' will be perforated and fracture stimulated using coiled tubing.

COPY SENT TO OPERATOR
Date: 4-30-04
Initials: CHD

14. I hereby certify that the foregoing is true and correct.

Name & Signature *Todd S. McDonald* Title *Director of Operations* Date *04/22/04*

(State Use Only)

APPROVED BY THE STATE OF UTAH DIVISION OF OIL, GAS, AND MINING
DATE: 4/29/04
BY: [signature]

(8/90) See Instructions on Reverse Side

RECEIVED
APR 2 8 2004
DIV. OF OIL, GAS & MINING

Division of Oil, Gas and Mining

OPERATOR CHANGE WORKSHEET

ROUTING
1. GLH
2. CDW
3. FILE

Change of Operator (Well Sold) — Designation of Agent/Operator

Operator Name Change — **X Merger**

The operator of the well(s) listed below has changed, effective: **9/28/2004**

FROM: (Old Operator):	**TO:** (New Operator):
N2545-Evergreen Operating Corp. 1401 17th St, Suite 1200 Denver, CO 80202 Phone: 1-(303) 298-8100	N5155-Pioneer Natural Resources USA, Inc. 5205 N O'Connor Blvd Irving, TX 75039 Phone: 1-(972) 444-9001

CA No. **Unit:**

WELL(S)

NAME	SEC	TWN	RNG	API NO	ENTITY NO	LEASE TYPE	WELL TYPE	WELL STATUS
HUBER-ST 1-35	35	110S	100E	4301332308	13472	State	WD	A
HUBER-JENSEN 1-4	04	120S	100E	4300730733	13068	Fee	GW	P
HUBER-JENSEN 2-8	08	120S	100E	4300730734	13275	Fee	GW	P
HUBER-JENSEN 1-8	08	120S	100E	4300730768	13359	Fee	GW	P
HUBER-JENSEN 2-9	09	120S	100E	4300730735	13317	Fee	GW	P
SHIMMIN 11-14	14	120S	100E	4300730962	14223	Fee	GW	DRL K
HUBER-JENSEN 1-15	15	120S	100E	4300730736	13072	Fee	GW	P
JENSON 7-15 DEEP	15	120S	100E	4300730786	13247	Fee	GW	TA
HUBER-STATE 1-16	16	120S	100E	4300730589	12610	State	GW	P
HUBER-ST 4-16	16	120S	100E	4300730785	13318	State	GW	P
STATE 11-16	16	120S	100E	4300730961	14224	State	GW	DRL K
HUBER-JENSEN 1-18	18	120S	100E	4300730718	14226	Fee	GW	DRL
PINE SPRINGS ST 6-36-14-22	36	140S	220E	4304735555	14352	State	GW	DRL K
STATE 8-2-15-22	02	150S	220E	4304731135	8076	State	GW	S
PINE SPRINGS FED 12-23-14S-22E	23	140S	220E	4304734676	13616	Federal	GW	TA K

OPERATOR CHANGES DOCUMENTATION

Enter date after each listed item is completed

1. (R649-8-10) Sundry or legal documentation was received from the **FORMER** operator on: 10/21/2004
2. (R649-8-10) Sundry or legal documentation was received from the **NEW** operator on: 10/21/2004
3. The new company was checked on the **Department of Commerce, Division of Corporations Database on:** 10/21/2004
4. Is the new operator registered in the State of Utah: YES Business Number: 5738462-0143
5. If **NO**, the operator was contacted contacted on:

6a. (R649-9-2)Waste Management Plan has been received on:

6b. Inspections of LA PA state/fee well sites complete on: ***

15

7. **Federal and Indian Lease Wells:** The BLM and or the BIA has approved the merger, name change, or operator change for all wells listed on Federal or Indian leases on: not yet

8. **Federal and Indian Units:**
The BLM or BIA has approved the successor of unit operator for wells listed on: _____

9. **Federal and Indian Communization Agreements ("CA"):**
The BLM or BIA has approved the operator for all wells listed within a CA on: _____

10. **Underground Injection Control ("UIC")** The Division has approved UIC Form 5, **Transfer of Authority to Inject,** for the enhanced/secondary recovery unit/project for the water disposal well(s) listed on: N/A

DATA ENTRY:

1. Changes entered in the **Oil and Gas Database on:** 10/28/2004
2. Changes have been entered on the **Monthly Operator Change Spread Sheet on:** 10/28/2004
3. Bond information entered in RBDMS on: 10/28/2004
4. Fee/State wells attached to bond in RBDMS on: 10/28/2004
5. Injection Projects to new operator in RBDMS on: 10/28/2004
6. Receipt of Acceptance of Drilling Procedures for APD/New on: ***

FEDERAL WELL(S) BOND VERIFICATION:

1. Federal well(s) covered by Bond Number: 104091293

INDIAN WELL(S) BOND VERIFICATION:

1. Indian well(s) covered by Bond Number: n/a

FEE & STATE WELL(S) BOND VERIFICATION:

1. (R649-3-1) The **NEW** operator of any fee well(s) listed covered by Bond Number 104319462
2. The **FORMER** operator has requested a release of liability from their bond on: 10/21/2004
   The Division sent response by letter on: 10/28/2004

LEASE INTEREST OWNER NOTIFICATION:

3. (R649-2-10) The **FORMER** operator of the fee wells has been contacted and informed by a letter from the Division of their responsibility to notify all interest owners of this change on: 11/1/2004

COMMENTS:

FORM 9

STATE OF UTAH
DEPARTMENT OF NATURAL RESOURCES
DIVISION OF OIL, GAS AND MINING

SUNDRY NOTICES AND REPORTS ON WELLS

Do not use this form for proposals to drill new wells, significantly deepen existing wells below current bottom-hole depth, reenter plugged wells, or to drill horizontal laterals. Use APPLICATION FOR PERMIT TO DRILL form for such proposals.

5. LEASE DESIGNATION AND SERIAL NUMBER:
6. IF INDIAN, ALLOTTEE OR TRIBE NAME:
7. UNIT or CA AGREEMENT NAME:
8. WELL NAME and NUMBER: See Attached List
9. API NUMBER:
10. FIELD AND POOL, OR WILDCAT:

1. TYPE OF WELL: OIL WELL ☐ GAS WELL ☑ OTHER _____

2. NAME OF OPERATOR: Pioneer Natural Resources USA, Inc. N5155

3. ADDRESS OF OPERATOR: 5205 N. O'Connor Blvd CITY Irving STATE TX ZIP 75039 PHONE NUMBER: (972) 444-9001

4. LOCATION OF WELL
FOOTAGES AT SURFACE:
QTR/QTR, SECTION, TOWNSHIP, RANGE, MERIDIAN:
COUNTY:
STATE: UTAH

11. CHECK APPROPRIATE BOXES TO INDICATE NATURE OF NOTICE, REPORT, OR OTHER DATA

TYPE OF SUBMISSION	TYPE OF ACTION		
☑ NOTICE OF INTENT (Submit in Duplicate)	☐ ACIDIZE	☐ DEEPEN	☐ REPERFORATE CURRENT FORMATION
Approximate date work will start: _____	☐ ALTER CASING	☐ FRACTURE TREAT	☐ SIDETRACK TO REPAIR WELL
	☐ CASING REPAIR	☐ NEW CONSTRUCTION	☐ TEMPORARILY ABANDON
	☐ CHANGE TO PREVIOUS PLANS	☑ OPERATOR CHANGE	☐ TUBING REPAIR
	☐ CHANGE TUBING	☐ PLUG AND ABANDON	☐ VENT OR FLARE
☐ SUBSEQUENT REPORT (Submit Original Form Only)	☐ CHANGE WELL NAME	☐ PLUG BACK	☐ WATER DISPOSAL
Date of work completion: _____	☐ CHANGE WELL STATUS	☐ PRODUCTION (START/RESUME)	☐ WATER SHUT-OFF
	☐ COMMINGLE PRODUCING FORMATIONS	☐ RECLAMATION OF WELL SITE	☐ OTHER: _____
	☐ CONVERT WELL TYPE	☐ RECOMPLETE - DIFFERENT FORMATION	

12. DESCRIBE PROPOSED OR COMPLETED OPERATIONS. Clearly show all pertinent details including dates, depths, volumes, etc.

1. Operator change due to the merger between Pioneer Natural Resources USA, Inc and Evergreen Resources Inc., effective September 28, 2004.
2. See list attached for all wells currently operated under the name of Evergreen Operating (subsidiary of Evergreen Resources) as listed on the DOGM database on October 15, 2004.
3. Operator will now be Pioneer Natural Resources USA, Inc. Local operation address info and contacts under separate cover.
4. Surety Bond #104319462 (replaces RLB 0006706) attached
5. Copy of Oil & Gas Geothermal Lease Bond - BLM #104091293 attached

Name: Dennis R. Carlton
Title: Executive Vice President, Evergreen Operating Corp. N2545
Signature: _____
Date: 10/18/04

NAME (PLEASE PRINT) Jay Still
TITLE Vice President, Western Division, Pioneer Natural Resources USA Inc.
SIGNATURE _____
DATE 10/19/04

(This space for State use only)

APPROVED 10/28/04
Earlene Russell (See Instructions on Reverse Side)
Division of Oil, Gas and Mining
Earlene Russell, Engineering Technician

RECEIVED
OCT 21 2004
DIV. OF OIL, GAS & MINING

(5/2000)

EVERGREEN TO PIONEER NATURAL RESOURCES USA, INC. MERGER
WELL LIST 10/15/04

API Well Number	Operator	Well Name	Well Type	Well Status	Field Name	County Name	Location (Twn-Rng)	Sect	Twpn	Twpd	RngN	RngD	Qtr/Qtr
43-007-30122-00-00	EVERGREEN OPERATING CORP	SHIMMIN TRUST 5	Gas Well	Producing	CASTLEGATE	CARBON	12S-10E	14	12	S	10	E	NWNE
43-007-30137-00-00	EVERGREEN OPERATING CORP	HUBER-FEDERAL 7-9	Gas Well	Producing	CASTLEGATE	CARBON	12S-10E	9	12	S	10	E	SWNE
43-007-30138-00-00	EVERGREEN OPERATING CORP	HUBER-FRANDSEN 4-15	Gas Well	Plugged and Abandoned	CASTLEGATE	CARBON	12S-10E	15	12	S	10	E	NWNW
43-007-30140-00-00	EVERGREEN OPERATING CORP	HUBER-FED 6-8	Gas Well	Plugged and Abandoned	CASTLEGATE	CARBON	12S-10E	8	12	S	10	E	SENW
43-007-30159-00-00	EVERGREEN OPERATING CORP	HUBER-JENSEN 9-10	Gas Well	Producing	CASTLEGATE	CARBON	12S-10E	10	12	S	10	E	NESE
43-007-30162-00-00	EVERGREEN OPERATING CORP	HUBER-JENSEN 5-10	Gas Well	Producing	CASTLEGATE	CARBON	12S-10E	10	12	S	10	E	SWNW
43-007-30163-00-00	EVERGREEN OPERATING CORP	HUBER-JENSEN 16-9	Gas Well	Producing	CASTLEGATE	CARBON	12S-10E	9	12	S	10	E	SESE
43-007-30164-00-00	EVERGREEN OPERATING CORP	HUBER-JENSEN 11-10	Gas Well	Producing	CASTLEGATE	CARBON	12S-10E	10	12	S	10	E	NESW
43-007-30166-00-00	EVERGREEN OPERATING CORP	SHIMMIN TRUST 11-11	Gas Well	Spudded (Drilling commenced: Not yet completed)	CASTLEGATE	CARBON	12S-10E	11	12	S	10	E	NESW
43-007-30169-00-00	EVERGREEN OPERATING CORP	SHIMMIN TRUST 14-12	Gas Well	Plugged and Abandoned	CASTLEGATE	CARBON	12S-10E	12	12	S	10	E	SESW
43-007-30589-00-00	EVERGREEN OPERATING CORP	HUBER-STATE 1-16	Gas Well	Producing	CASTLEGATE	CARBON	12S-10E	16	12	S	10	E	NWNE
43-007-30596-00-00	EVERGREEN OPERATING CORP	HUBER-JENSEN 1-10	Gas Well	Producing	CASTLEGATE	CARBON	12S-10E	10	12	S	10	E	NWSW
43-007-30640-00-00	EVERGREEN OPERATING CORP	HUBER-SHIMMIN TRUST 3-14	Gas Well	Producing	CASTLEGATE	CARBON	12S-10E	14	12	S	10	E	SENE
43-007-30659-00-00	EVERGREEN OPERATING CORP	HUBER-SHIMMIN TRUST 2-11	Gas Well	Producing	CASTLEGATE	CARBON	12S-10E	11	12	S	10	E	SESE
43-007-30662-00-00	EVERGREEN OPERATING CORP	HUBER-SHIMMIN TRUST 4-14	Gas Well	Producing	CASTLEGATE	CARBON	12S-10E	14	12	S	10	E	SENW
~~43-007-30663-00-00~~	~~EVERGREEN OPERATING CORP~~	~~HUBER-ST/F 4-11~~	~~Gas Well~~	~~Location Abandoned~~	~~CASTLEGATE~~	~~CARBON~~	~~12S-10E~~	~~11~~	~~12~~	~~S~~	~~10~~	~~E~~	~~SE~~
43-007-30673-00-00	EVERGREEN OPERATING CORP	HUBER-SHIMMIN TRUST 1-11	Gas Well	Producing	CASTLEGATE	CARBON	12S-10E	11	12	S	10	E	S[illegible]
43-007-30674-00-00	EVERGREEN OPERATING CORP	HUBER-SHIMMIN TRUST 1-12	Gas Well	Producing	CASTLEGATE	CARBON	12S-10E	12	12	S	10	E	NW[illegible]
43-007-30675-00-00	EVERGREEN OPERATING CORP	HUBER-JENSEN 2-10	Gas Well	Spudded (Drilling commenced: Not yet completed)	CASTLEGATE	CARBON	12S-10E	10	12	S	10	E	NESE
~~43-007-30708-00-00~~	~~EVERGREEN OPERATING CORP~~	~~HUBER-JENSEN 3-10~~	~~Gas Well~~	~~Location Abandoned~~	~~CASTLEGATE~~	~~CARBON~~	~~12S-10E~~	~~10~~	~~12~~	~~S~~	~~10~~	~~E~~	~~SWNE~~
43-007-30717-00-00	EVERGREEN OPERATING CORP	HUBER-JENSEN 1-9	Gas Well	Producing	CASTLEGATE	CARBON	12S-10E	9	12	S	10	E	NWSW
43-007-30718-00-00	EVERGREEN OPERATING CORP	HUBER-JENSEN 1-18	Gas Well	Spudded (Drilling commenced: Not yet completed)	CASTLEGATE	CARBON	12S-10E	18	12	S	10	E	NESE
43-007-30733-00-00	EVERGREEN OPERATING CORP	HUBER-JENSEN 1-4	Gas Well	Producing	CASTLEGATE	CARBON	12S-10E	4	12	S	10	E	SWSE
43-007-30734-00-00	EVERGREEN OPERATING CORP	HUBER-JENSEN 2-8	Gas Well	Producing	CASTLEGATE	CARBON	12S-10E	8	12	S	10	E	NENE
43-007-30735-00-00	EVERGREEN OPERATING CORP	HUBER-JENSEN 2-9	Gas Well	Producing	CASTLEGATE	CARBON	12S-10E	9	12	S	10	E	NENW
43-007-30736-00-00	EVERGREEN OPERATING CORP	HUBER-JENSEN 1-15	Gas Well	Producing	CASTLEGATE	CARBON	12S-10E	15	12	S	10	E	SWNE
43-007-30764-00-00	EVERGREEN OPERATING CORP	HUBER-J/F 2-17	Gas Well	New Permit (Not yet approved or drilled)	CASTLEGATE	CARBON	12S-10E	17	12	S	10	E	NENW
43-007-30768-00-00	EVERGREEN OPERATING CORP	HUBER-JENSEN 1-8	Gas Well	Producing	CASTLEGATE	CARBON	12S-10E	8	12	S	10	E	NESE
43-007-30769-00-00	EVERGREEN OPERATING CORP	HUBER-JENSEN 1-17	Gas Well	New Permit (Not yet approved or drilled)	CASTLEGATE	CARBON	12S-10E	17	12	S	10	E	NENE
43-007-30783-00-00	EVERGREEN OPERATING CORP	HUBER-ST 2-16	Gas Well	Approved permit (APD); not yet spudded	CASTLEGATE	CARBON	12S-10E	16	12	S	10	E	NWSE
43-007-30784-00-00	EVERGREEN OPERATING CORP	HUBER-ST 3-16	Gas Well	Approved permit (APD); not yet spudded	CASTLEGATE	CARBON	12S-10E	16	12	S	10	E	SESW
43-007-30785-00-00	EVERGREEN OPERATING CORP	HUBER-ST 4-16	Gas Well	Producing	CASTLEGATE	CARBON	12S-10E	16	12	S	10	E	SE[illegible]
43-007-30787-00-00	EVERGREEN OPERATING CORP	H-M FED 2-14	Gas Well	New Permit (Not yet approved or drilled)	CASTLEGATE	CARBON	12S-10E	14	12	S	10	E	NES[illegible]
43-007-30810-00-00	EVERGREEN OPERATING CORP	HUBER-JENSEN 2-5	Gas Well	New Permit (Not yet approved or drilled)	CASTLEGATE	CARBON	12S-10E	5	12	S	10	E	NESW
43-007-30858-00-00	EVERGREEN OPERATING CORP	HUBER-JENSEN 4-17	Gas Well	New Permit (Not yet approved or drilled)	CASTLEGATE	CARBON	12S-10E	17	12	S	10	E	NESE
43-007-30859-00-00	EVERGREEN OPERATING CORP	HUBER-JENSEN 2-18	Gas Well	New Permit (Not yet approved or drilled)	CASTLEGATE	CARBON	12S-10E	18	12	S	10	E	NENE
43-007-30860-00-00	EVERGREEN OPERATING CORP	HUBER-JENSEN 4-8	Gas Well	New Permit (Not yet approved or drilled)	CASTLEGATE	CARBON	12S-10E	8	12	S	10	E	NWSW

EVERGREEN TO PIONEER NATURAL RESOURCES USA, INC. MERGER
WELL LIST 10/15/04

API Well Number	Operator	Well Name	Well Type	Well Status	Field Name	County Name	Location (Twn-Rng)	Sect	Twpn	Twpd	RngN	RngD	Qtr/Qtr
43-007-30947-00-00	EVERGREEN OPERATING CORP	HUBER-FRANDSEN/FED 4-15	Gas Well	New Permit (Not yet approved or drilled)	CASTLEGATE	CARBON	12S-10E	15	12	S	10	E	NWNW
43-007-30961-00-00	EVERGREEN OPERATING CORP	STATE 11-16	Gas Well	Spudded (Drilling commenced: Not yet completed)	CASTLEGATE	CARBON	12S-10E	16	12	S	10	E	NWNW
43-007-30962-00-00	EVERGREEN OPERATING CORP	SHIMMIN 11-14	Gas Well	Spudded (Drilling commenced: Not yet completed)	CASTLEGATE	CARBON	12S-10E	14	12	S	10	E	NWNW
43-007-30786	***EVERGREEN OPERATING CORP***	***Jensen 7-15 Deep***	***Gas Well***	***Active***	***WILDCAT***	***CARBON***	***12S-10E***	***15***	***12***	***S***	***10***	***E***	***SWNE***
43-007-30977-00-00	EVERGREEN OPERATING CORP	JENSEN 24-4	Gas Well	New Permit (Not yet approved or drilled)	CASTLEGATE	CARBON	12S-10E	4	12	S	10	E	SESW
43-007-30978-00-00	EVERGREEN OPERATING CORP	JENSEN 34-5	Gas Well	New Permit (Not yet approved or drilled)	CASTLEGATE	CARBON	12S-10E	5	12	S	10	E	SWSE
43-007-30980-00-00	EVERGREEN OPERATING CORP	JENSEN 41-9	Gas Well	New Permit (Not yet approved or drilled)	CASTLEGATE	CARBON	12S-10E	9	12	S	10	E	NENE
43-007-30981-00-00	EVERGREEN OPERATING CORP	JENSEN 34-10	Gas Well	New Permit (Not yet approved or drilled)	CASTLEGATE	CARBON	12S-10E	10	12	S	10	E	SWSE
43-013-32308-00-00	EVERGREEN OPERATING CORP	HUBER-ST 1-35	Water Disposal Well	Active	CASTLEGATE	DUCHESNE	11S-10E	35	11	S	10	E	SW
43-013-32317-00-00	EVERGREEN OPERATING CORP	HUBER-STATE 1-27	Gas Well	New Permit (Not yet approved or drilled)	WILDCAT	DUCHESNE	11S-10E	27	11	S	10	E	SWSE
~~43-017-30101-00-00~~	~~EVERGREEN OIL CORP~~	~~POISON SPRINGS U 1-USA~~	~~Oil Well~~	~~Plugged and Abandoned~~	~~WILDCAT~~	~~GARFIELD~~	~~01S-12E~~	~~24~~	~~01~~	~~S~~	~~12~~	E	NESE
~~43-017-30102-00-00~~	~~EVERGREEN OIL CORP~~	~~POISON SPRINGS U 2 USA~~	~~Oil Well~~	~~Plugged and Abandoned~~	~~WILDCAT~~	~~GARFIELD~~	~~01S-12E~~	~~4~~	~~01~~	~~S~~	~~12~~	E	NENE
43-019-30136-00-00	EVERGREEN OPERATING CORP	ANDERSON FED 2	Gas Well	Producing	EAST CANYON	GRAND	16S-24E	12	16	S	24	E	SWSW
43-019-30955-00-00	EVERGREEN OPERATING CORP	FEDERAL 24-1	Gas Well	Shut-In	EAST CANYON	GRAND	16S-24E	24	16	S	24	E	NWNE
43-019-31077-00-00	EVERGREEN OPERATING CORP	FEDERAL 1-34	Gas Well	Producing	BRYSON CANYON	GRAND	16S-24E	34	16	S	24	E	NESE
43-019-31078-00-00	EVERGREEN OPERATING CORP	FEDERAL 2-34	Gas Well	Producing	BRYSON CANYON	GRAND	16S-24E	34	16	S	24	E	SESW
43-047-30248-00-00	EVERGREEN OPERATING CORP	BLACK HORSE 2	Gas Well	Shut-In	BLACK HORSE CYN	UINTAH	15S-24E	29	15	S	24	E	SESE
43-047-30284-00-00	EVERGREEN OPERATING CORP	PINE SPRING U 1	Gas Well	Producing	PINE SPRINGS	UINTAH	14S-22E	15	14	S	22	E	NESW
43-047-30325-00-00	EVERGREEN OPERATING CORP	RAT HOLE CYN 1	Gas Well	Shut-In	RAT HOLE CANYON	UINTAH	14S-25E	8	14	S	25	E	NWSE
43-047-30331-00-00	EVERGREEN OPERATING CORP	DRY BURN U 1	Gas Well	Shut-In	DRY BURN	UINTAH	13S-25E	29	13	S	25	E	NWSE
43-047-30332-00-00	EVERGREEN OPERATING CORP	1-L-23	Gas Well	Shut-In	SWEETWATER CYN	UINTAH	14S-24E	23	14	S	24	E	SWNE
43-047-30460-00-00	EVERGREEN OPERATING CORP	SWEETWATER CYN 1	Gas Well	Shut-In	SWEETWATER CYN	UINTAH	14S-24E	14	14	S	24	E	SWNW
43-047-30582-00-00	EVERGREEN OPERATING CORP	TRAPP SPRINGS 4-25-14-23	Gas Well	Producing	MAIN CANYON	UINTAH	14S-23E	25	14	S	23	E	SWSW
43-047-30619-00-00	EVERGREEN OPERATING CORP	CROOKED CYN 13-17-14-23	Gas Well	Producing	CROOKED CANYON	UINTAH	14S-23E	17	14	S	23	E	NWNW
43-047-30622-00-00	EVERGREEN OPERATING CORP	WOLF UNIT 3-11-15-21	Gas Well	Shut-In	WOLF POINT	UINTAH	15S-21E	11	15	S	21	E	SESW
43-047-30639-00-00	EVERGREEN OPERATING CORP	MAIN CYN 11-10-15-23	Gas Well	Producing	MAIN CANYON	UINTAH	15S-23E	10	15	S	23	E	SENW
43-047-30674-00-00	EVERGREEN OPERATING CORP	MAIN CYN 15-8-15-23	Gas Well	Producing	MAIN CANYON	UINTAH	15S-23E	8	15	S	23	E	NWNE
43-047-30735-00-00	EVERGREEN OPERATING CORP	MAIN CYN 2-8-15-23	Gas Well	Producing	MAIN CANYON	UINTAH	15S-23E	8	15	S	23	E	SWSE
43-047-30736-00-00	EVERGREEN OPERATING CORP	MAIN CYN 7-17-15-23	Gas Well	Producing	MAIN CANYON	UINTAH	15S-23E	17	15	S	23	E	NWSE
43-047-30746-00-00	EVERGREEN OPERATING CORP	STATE 11-2-15-22	Gas Well	Plugged and Abandoned	MAIN CANYON	UINTAH	15S-22E	2	15	S	22	E	SENW
43-047-30791-00-00	EVERGREEN OPERATING CORP	TRAPP SPRINGS 6-35-14-23	Gas Well	Producing	MAIN CANYON	UINTAH	14S-23E	35	14	S	23	E	NE
43-047-30944-00-00	EVERGREEN OPERATING CORP	TRAPP SPRINGS 8-36-14-23	Gas Well	Producing	MAIN CANYON	UINTAH	14S-23E	36	14	S	23	E	NE
43-047-30975-00-00	EVERGREEN OPERATING CORP	TRAPP SPRINGS 1-25-14-23	Gas Well	Producing	MAIN CANYON	UINTAH	14S-23E	25	14	S	23	E	SES
43-047-30977-00-00	EVERGREEN OPERATING CORP	MAIN CYN 8-7-15-23	Gas Well	Producing	MAIN CANYON	UINTAH	15S-23E	7	15	S	23	E	NESE
43-047-31003-00-00	EVERGREEN OPERATING CORP	TRAPP SPRINGS 3-26-14-23	Gas Well	Shut-In	MAIN CANYON	UINTAH	14S-23E	26	14	S	23	E	SESW
43-047-31027-00-00	EVERGREEN OPERATING CORP	FEDERAL 6-14-15-21	Gas Well	Shut-In	WOLF POINT	UINTAH	15S-21E	14	15	S	21	E	NESW
43-047-31040-00-00	EVERGREEN OPERATING CORP	SWEETWATER 6-13-14-24	Gas Well	Shut-In	SWEETWATER CYN	UINTAH	14S-24E	13	14	S	24	E	NESW
43-047-31041-00-00	EVERGREEN OPERATING CORP	TRAPP SPRINGS 16-25-14-23	Gas Well	Producing	MAIN CANYON	UINTAH	14S-23E	25	14	S	23	E	NENE
43-047-31042-00-00	EVERGREEN OPERATING CORP	PINE SPRINGS 7-21-14-22	Gas Well	Producing	PINE SPRINGS	UINTAH	14S-22E	21	14	S	22	E	NWSE
43-047-31043-00-00	EVERGREEN OPERATING CORP	MAIN CYN 4-4-15-23	Gas Well	Producing	MAIN CANYON	UINTAH	15S-23E	4	15	S	23	E	SWSW
43-047-31045-00-00	EVERGREEN OPERATING CORP	BLACK HORSE 14-15-15-24	Gas Well	Shut-In	SOUTH CANYON	UINTAH	15S-24E	15	15	S	24	E	NENW
43-047-31063-00-00	EVERGREEN OPERATING CORP	PINE SPRINGS 8-20-14-22	Gas Well	Producing	PINE SPRINGS	UINTAH	14S-22E	20	14	S	22	E	NESE

EVERGREEN TO PIONEER NATURAL RESOURCES USA, INC. MERGER
WELL LIST 10/15/04

API Well Number	Operator	Well Name	Well Type	Well Status	Field Name	County Name	Location (Twn-Rng)	Sect	Twpn	Twpd	RngN	RngD	Qtr/Qtr
43-047-31071-00-00	EVERGREEN OPERATING CORP	FEDERAL 7-15-15-21	Gas Well	Shut-In	WOLF POINT	UINTAH	15S-21E	15	15	S	21	E	NWSE
43-047-31072-00-00	EVERGREEN OPERATING CORP	MAIN CYN 6-3-15-23	Gas Well	Shut-In	MAIN CANYON	UINTAH	15S-23E	3	15	S	23	E	NESW
43-047-31073-00-00	EVERGREEN OPERATING CORP	MAIN CYN 6-8-15-23	Gas Well	Producing	MAIN CANYON	UINTAH	15S-23E	8	15	S	23	E	NESW
43-047-31074-00-00	EVERGREEN OPERATING CORP	PINE SPRINGS 13-26-14-22	Gas Well	Producing	PINE SPRINGS	UINTAH	14S-22E	26	14	S	22	E	NWNW
43-047-31091-00-00	EVERGREEN OPERATING CORP	FEDERAL 2-18-15-22	Gas Well	Shut-In	WOLF POINT	UINTAH	15S-22E	18	15	S	22	E	SWSE
43-047-31096-00-00	EVERGREEN OPERATING CORP	PINE SPRINGS 9-12-14-21	Gas Well	Producing	PINE SPRINGS	UINTAH	14S-21E	12	14	S	21	E	SENE
43-047-31104-00-00	EVERGREEN OPERATING CORP	BLACK HORSE 12-8-15-24	Gas Well	Shut-In	SOUTH CANYON	UINTAH	15S-24E	8	15	S	24	E	SWNW
43-047-31111-00-00	EVERGREEN OPERATING CORP	MAIN CYN 16-4-15-23	Gas Well	Shut-In	MAIN CANYON	UINTAH	15S-23E	4	15	S	23	E	NENE
43-047-31134-00-00	EVERGREEN OPERATING CORP	FED ENI 7-1	Gas Well	Producing	DAVIS CANYON	UINTAH	13S-26E	7	13	S	26	E	NENE
43-047-31135-00-00	EVERGREEN OPERATING CORP	STATE 8-2-15-22	Gas Well	Shut-In	MAIN CANYON	UINTAH	15S-22E	2	15	S	22	E	NESE
43-047-31137-00-00	EVERGREEN OPERATING CORP	FEDERAL 5-13-15-21	Gas Well	Shut-In	WOLF POINT	UINTAH	15S-21E	13	15	S	21	E	NWSW
43-047-31348-00-00	EVERGREEN OPERATING CORP	FEDERAL 12-18-14-22	Gas Well	Shut-In	PINE SPRINGS	UINTAH	14S-22E	18	14	S	22	E	SWNW
~~43-047-34674-00-00~~	~~EVERGREEN OPERATING CORP~~	~~PINE SPRINGS FED 3-23-14S-22E~~	~~Gas Well~~	~~Location Abandoned~~	~~PINE SPRINGS~~	~~UINTAH~~	~~14S-22E~~	~~23~~	~~14~~	~~S~~	~~22~~	~~E~~	~~SENE~~
43-047-34675-00-00	EVERGREEN OPERATING CORP	PINE SPRINGS FED 3-23-14S-22E	Gas Well	Producing	PINE SPRINGS	UINTAH	14S-22E	23	14	S	22	E	SESW
43-047-34676-00-00	EVERGREEN OPERATING CORP	PINE SPRINGS FED 12-23-14S-22E	Gas Well	Temporarily-Abandoned	PINE SPRINGS	UINTAH	14S-22E	23	14	S	22	E	SWNW
43-047-34941-00-00	EVERGREEN OPERATING CORP	BONANZA FED 15-27-10-25	Gas Well	Producing	UNDESIGNATED	UINTAH	10S-25E	27	10	S	25	E	NWNE
43-047-35555-00-00	EVERGREEN OPERATING CORP	PINE SPRINGS ST 6-36-14-22	Gas Well	Spudded (Drilling commenced: Not yet completed)	UNDESIGNATED	UINTAH	14S-22E	36	14	S	22	E	NE
43-047-35556-00-00	EVERGREEN OPERATING CORP	PINE SPRINGS FED 4-22-14-22	Gas Well	Approved permit (APD); not yet spudded	PINE SPRINGS	UINTAH	14S-22E	22	14	S	22	E	SWSW
43-047-35566-00-00	EVERGREEN OPERATING CORP	PINE SPRINGS FED 15-21-14-22	Gas Well	Approved permit (APD); not yet spudded	PINE SPRINGS	UINTAH	14S-22E	21	14	S	22	E	NWNE

STATE OF UTAH
DEPARTMENT OF NATURAL RESOURCES
DIVISION OF OIL, GAS AND MINING

FORM 9

SUNDRY NOTICES AND REPORTS ON WELLS

Do not use this form for proposals to drill new wells, significantly deepen existing wells below current bottom-hole depth, reenter plugged wells, or to drill horizontal laterals. Use APPLICATION FOR PERMIT TO DRILL form for such proposals.

5. LEASE DESIGNATION AND SERIAL NUMBER:

6. IF INDIAN, ALLOTTEE OR TRIBE NAME:

7. UNIT or CA AGREEMENT NAME:

1. TYPE OF WELL: OIL WELL ☐ GAS WELL ☑ OTHER

8. WELL NAME and NUMBER: See attached list

2. NAME OF OPERATOR: Pioneer Natural Resources

9. API NUMBER: 43-007-30587

3. ADDRESS OF OPERATOR: 1401 17th St., Suite 1200 CITY Denver STATE CO ZIP 80202

PHONE NUMBER: (303) 298-8100

10. FIELD AND POOL, OR WILDCAT:

4. LOCATION OF WELL

FOOTAGES AT SURFACE:

COUNTY:

QTR/QTR, SECTION, TOWNSHIP, RANGE, MERIDIAN:

STATE: UTAH

11. CHECK APPROPRIATE BOXES TO INDICATE NATURE OF NOTICE, REPORT, OR OTHER DATA

TYPE OF SUBMISSION	TYPE OF ACTION		
☑ NOTICE OF INTENT (Submit in Duplicate)	☐ ACIDIZE	☐ DEEPEN	☐ REPERFORATE CURRENT FORMATION
Approximate date work will start:	☐ ALTER CASING	☐ FRACTURE TREAT	☐ SIDETRACK TO REPAIR WELL
1/13/2006	☐ CASING REPAIR	☐ NEW CONSTRUCTION	☐ TEMPORARILY ABANDON
	☐ CHANGE TO PREVIOUS PLANS	☐ OPERATOR CHANGE	☐ TUBING REPAIR
	☐ CHANGE TUBING	☐ PLUG AND ABANDON	☐ VENT OR FLARE
☐ SUBSEQUENT REPORT (Submit Original Form Only)	☑ CHANGE WELL NAME	☐ PLUG BACK	☐ WATER DISPOSAL
Date of work completion:	☐ CHANGE WELL STATUS	☐ PRODUCTION (START/RESUME)	☐ WATER SHUT-OFF
	☐ COMMINGLE PRODUCING FORMATIONS	☐ RECLAMATION OF WELL SITE	☐ OTHER:
	☐ CONVERT WELL TYPE	☐ RECOMPLETE - DIFFERENT FORMATION	

12. DESCRIBE PROPOSED OR COMPLETED OPERATIONS. Clearly show all pertinent details including dates, depths, volumes, etc.

Change well name from "State Well Name" (Column 1) to "Well Name" (Column 2). See attached list for wells.

NAME (PLEASE PRINT) Kallasandra M. Boulay TITLE Engineering Analyst

SIGNATURE DATE 1/3/2006

(This space for State use only)

RECEIVED
JAN 06 2006
DIV. OF OIL, GAS & MINING

(5/2000) (See Instructions on Reverse Side)

Pioneer Natural Resources
1401 17th Street, Suite 1200
Denver, Colorado 80202
Contact: Kallasandra Boulay
Phone: (303) 675-2719

RECEIVED
JAN 0 6 2006
DIV. OF OIL, GAS & MINING

State Well Name	Well Name	Q	S	T	R	State	County	Field	Status (State)	API #	Operator	Well Type
Huber-Federal 7-9	Huber Federal 7-9-12-10	SWNE	9	12S	10E	Utah	Carbon	Castlegate	PR	43-007-30137	PNR	Gas Well
Huber-Jensen 1-10	Huber Jensen 1-10-12-10	NWSW	10	12S	10E	Utah	Carbon	Castlegate	PR	43-007-30596	PNR	Gas Well
Huber-Jensen 11-10	Huber Jensen 11-10-12-10	NESW	10	12S	10E	Utah	Carbon	Castlegate	PR	43-007-30164	PNR	Gas Well
Huber-Jensen 1-15	Huber Jensen 1-15-12-10	SWNE	15	12S	10E	Utah	Carbon	Castlegate	PR	43-007-30736	PNR	Gas Well
Huber-Jensen 1-4	Huber Jensen 1-4-12-10	SWSE	4	12S	10E	Utah	Carbon	Castlegate	PR	43-007-30733	PNR	Gas Well
Huber-Jensen 16-9	Huber Jensen 16-9-12-10	SESE	9	12S	10E	Utah	Carbon	Castlegate	PR	43-007-30163	PNR	Gas Well
Huber-Jensen 1-8	Huber Jensen 1-8-12-10	NESE	8	12S	10E	Utah	Carbon	Castlegate	PR	43-007-30768	PNR	Gas Well
Huber-Jensen 1-9	Huber Jensen 1-9-12-10	NWSW	9	12S	10E	Utah	Carbon	Castlegate	PR	43-007-30717	PNR	Gas Well
Huber-Jensen 2-8	Huber Jensen 2-8-12-10	NENE	8	12S	10E	Utah	Carbon	Castlegate	PR	43-007-30734	PNR	Gas Well
Huber-Jensen 2-9	Huber Jensen 2-9-12-10	NENW	9	12S	10E	Utah	Carbon	Castlegate	PR	43-007-30735	PNR	Gas Well
Huber-Jensen 5-10	Huber Jensen 5-10-12-10	SWNW	10	12S	10E	Utah	Carbon	Castlegate	PR	43-007-30162	PNR	Gas Well
Huber-Jensen 9-10	Huber Jensen 9-10-12-10	NESE	10	12S	10E	Utah	Carbon	Castlegate	PR	43-007-30159	PNR	Gas Well
Huber-Shimmin Trust 1-11	Huber Shimmin Trust 1-11-12-10	SWSW	11	12S	10E	Utah	Carbon	Castlegate	PR	43-007-30673	PNR	Gas Well
Huber-Shimmin Trust 1-12	Huber Shimmin Trust 1-12-12-10	NWSW	12	12S	10E	Utah	Carbon	Castlegate	PR	43-007-30674	PNR	Gas Well
Huber-Shimmin Trust 2-11	Huber Shimmin Trust 2-11-12-10	SESE	11	12S	10E	Utah	Carbon	Castlegate	PR	43-007-30659	PNR	Gas Well
Huber-Shimmin Trust 3-14	Huber Shimmin Trust 3-14-12-10	SENE	14	12S	10E	Utah	Carbon	Castlegate	SI	43-007-30640	PNR	Gas Well
Huber-Shimmin Trust 4-14	Huber Shimmin Trust 4-14-12-10	SENW	14	12S	10E	Utah	Carbon	Castlegate	PR	43-007-30662	PNR	Gas Well
Huber-State 1-16	Huber State 1-16-12-10	NWNE	16	12S	10E	Utah	Carbon	Castlegate	PR	43-007-30589	PNR	Gas Well
Huber -St 4-16	Huber State 4-16-12-10	SENW	16	12S	10E	Utah	Carbon	Castlegate	PR	43-007-30785	PNR	Gas Well
Jenson 7-15 Deep	Jensen Deep 7-15-12-10	SWNE	15	12S	10E	Utah	Carbon	Castlegate	TA	43-007-30786	PNR	Gas Well
Shimmin Trust 11-11	Shimmin Trust 11-11-12-10	NESW	11	12S	10E	Utah	Carbon	Castlegate	PR	43-007-30166	PNR	Gas Well
Shimmin Trust 14-12	Shimmin Trust 14-12-12-10	SESW	12	12S	10E	Utah	Carbon	Castlegate	XX	43-007-30169	PNR	Gas Well
Shimmin Trust 5	Shimmin Trust 5-14-12-10	NWNE	14	12S	10E	Utah	Carbon	Castlegate	PR	43-007-30122	PNR	Gas Well
Huber-St 1-35	Huber State 1-35-12-10 WDW	SWSW	35	12S	10E	Utah	Duchesne	Castlegate	Active	43-013-32308	PNR	WDW
Anderson Fed 2	Anderson Federal 2-12-16S-24E	SWSW	12	16S	24E	Utah	Grand	East Canyon	PR	43-019-30136	PNR	Gas Well
Federal 1-34	Bryson Canyon Federal 1-34-16S-24E	NESE	34	16S	24E	Utah	Grand	Bryson Canyon	PR	43-019-31077	PNR	Gas Well
Federal 2-34	Bryson Canyon Federal 2-34-16S-24E	SESW	34	16S	24E	Utah	Grand	Bryson Canyon	PR	43-019-31078	PNR	Gas Well
Federal 24-1	East Canyon Federal 24-1-16S-24E	NWNE	1	16S	24E	Utah	Grand	East Canyon	PA	43-019-30955	PNR	Gas Well
Black Horse 2	Black Horse 2 1-29-15S-24E	SESE	29	15S	24E	Utah	Uintah	Black Horse Canyon	SI	43-047-30248	PNR	Gas Well
Fed ENI 7-1	Davis Canyon Federal ENI 7-1-13S-26E	NENE	1	13S	26E	Utah	Uintah	Davis Canyon	SI	43-047-31134	PNR	Gas Well

UTAH DIVISION OF OIL, GAS AND MINING

NOTICE OF REPORTING PROBLEMS

Operator: Pioneer Natural Resources Account: N5155 Today's Date: 09/16/2008

Problems:

- [ ] Late Report(s)
- [ ] Inaccurate Report(s)
- [ ] Incomplete Report(s)
- [x] Other: No Subsequent Report

Failure to submit reports in a timely, accurate, and complete manner may result in the issuance of a Notice of Violation by the Division of Oil, Gas and Mining, and may result in the Division pursuing enforcement action as outlined in Rule R649-10, Administrative Procedures, and Section 40-6-11 of the Utah Code.

To avoid compliance action, these reporting problems should be resolved within 7 days.

Send reports to:

Utah Division of Oil, Gas and Mining
1594 West North Temple, Suite 1210
P.O. Box 145801
Salt Lake City, Utah 84114-5801

Fax to:

(801) 359-3940

43 007 30589
Castlegate St 1-16-12-10
12 S 10E 16

Type of Report	Month(s) of Problem Report
[ ] Production – Form 10 [ ] Disposition – Form 11 [ ] Gas Plant – Form 13 [ ] Enhanced Recovery – UIC Form 2 [ ] Injection – UIC Form 3 [ ] Other _____	

Type of Report	Well Name(s)	API Number(s)	Drilling Commenced
[ ] Spud Notice – Form 9 [ ] Drilling Reports – Form 9 [ ] Well Completion Report – Form 8 [x] Other Subsequent Sundry	[x] List Attached		

Description of Problem:

Operator has submitted sundry of intents on the following wells that have been approved by DOGM. Per Rule 649-3-23, a subsequent report shall be submitted on Form 9, Sundry Notice, within 30 days after completion. The report should show workover results, well status, work completion date, new perforation depths, etc.

If you have questions or concerns regarding this matter, please contact Rachel Medina at (801) 538-5260 .

cc: Compliance File
RAM
Well File
CHD

UTAH DIVISION OF OIL, GAS AND MINING

NOTICE OF REPORTING PROBLEMS

ATTACHMENT

Operator: Pioneer Natural Resources Account: N5155 Today's Date: 09/16/2008

Well Names	API Numbers	Drilling Commenced
Castlegate ST 1-16-12-10	4300730589	
Main Canyon ST 8-2-15-22	4304731135	
Main Canyon Fed 6-3-15-23	4304731072	
Main Cyn 44-15-23	4304731043	
Castlegate Fed 7-9-12-10	4300730137	
Davis Canyon Fed 7-1-13-26	4304731134	
Main Canyon 8-7-15-23	4304730977	
Main Canyon 8-7-15-23	4304730977	
Main Canyon 15-8-15-23	4304730674	

FORM 9

STATE OF UTAH
DEPARTMENT OF NATURAL RESOURCES
DIVISION OF OIL, GAS AND MINING

5. LEASE DESIGNATION AND SERIAL NUMBER: ML-44443

SUNDRY NOTICES AND REPORTS ON WELLS

6. IF INDIAN, ALLOTTEE OR TRIBE NAME:

7. UNIT or CA AGREEMENT NAME:

Do not use this form for proposals to drill new wells, significantly deepen existing wells below current bottom-hole depth, reenter plugged wells, or to drill horizontal laterals. Use APPLICATION FOR PERMIT TO DRILL form for such proposals.

1. TYPE OF WELL: OIL WELL ☐ GAS WELL ☑ OTHER _____

8. WELL NAME and NUMBER: Castlegate St 1-16-12-10

2. NAME OF OPERATOR: Pioneer Natural Resources USA, Inc.

9. API NUMBER: 43-007-30589

3. ADDRESS OF OPERATOR: 1401 17th Street - Ste 1200 CITY Denver STATE CO ZIP 80202

PHONE NUMBER: (303) 675-2663

10. FIELD AND POOL, OR WILDCAT: Castlegate

4. LOCATION OF WELL

FOOTAGES AT SURFACE: 820' FNL & 2163' FEL

COUNTY: Carbon

QTR/QTR, SECTION, TOWNSHIP, RANGE, MERIDIAN: NWNE 16 12S 10E

STATE: UTAH

11. CHECK APPROPRIATE BOXES TO INDICATE NATURE OF NOTICE, REPORT, OR OTHER DATA

TYPE OF SUBMISSION	TYPE OF ACTION		
☐ NOTICE OF INTENT (Submit in Duplicate)	☐ ACIDIZE	☐ DEEPEN	☐ REPERFORATE CURRENT FORMATION
Approximate date work will start:	☐ ALTER CASING	☐ FRACTURE TREAT	☐ SIDETRACK TO REPAIR WELL
	☐ CASING REPAIR	☐ NEW CONSTRUCTION	☐ TEMPORARILY ABANDON
	☐ CHANGE TO PREVIOUS PLANS	☐ OPERATOR CHANGE	☐ TUBING REPAIR
	☐ CHANGE TUBING	☐ PLUG AND ABANDON	☐ VENT OR FLARE
☐ SUBSEQUENT REPORT (Submit Original Form Only)	☐ CHANGE WELL NAME	☐ PLUG BACK	☐ WATER DISPOSAL
Date of work completion:	☐ CHANGE WELL STATUS	☐ PRODUCTION (START/RESUME)	☐ WATER SHUT-OFF
	☐ COMMINGLE PRODUCING FORMATIONS	☐ RECLAMATION OF WELL SITE	☑ OTHER: Close Frac Sundry
	☐ CONVERT WELL TYPE	☐ RECOMPLETE - DIFFERENT FORMATION	

12. DESCRIBE PROPOSED OR COMPLETED OPERATIONS. Clearly show all pertinent details including dates, depths, volumes, etc.

Per "Notice of Reporting Problems" requesting Subsequent Status of Evergreen Operating Company's Sundry dated 4/22/04 for additional perfs and fracture treatment. To the best of my knowledge, Evergreen did not perform this work. Please close the Notice of Intent Sundry dated 4/22/04.

NAME (PLEASE PRINT) Joy A. Ziegler TITLE Senior Engineering Tech

SIGNATURE Joy A. Ziegler DATE 1/21/2009

(This space for State use only)

RECEIVED
JAN 26 2009
DIV. OF OIL, GAS & MINING

(5/2000) (See Instructions on Reverse Side)

Division of Oil, Gas and Mining

OPERATOR CHANGE WORKSHEET (for state use only)

ROUTING
1. DJJ
2. CDW

X - Change of Operator (Well Sold) Operator Name Change/Merger

The operator of the well(s) listed below has changed, effective: **4/1/2010**

FROM: (Old Operator):	**TO:** (New Operator):
N5155-Pioneer Natural Resources USA, Inc. 1401 17th St, Suite 1200 Denver, CO 80202 Phone: 1 (303) 675-2610	N3680-Blue Tip Castlegate, Inc. 15810 Park Ten Place, Suite 160 Houston, TX 77084 Phone: 1 (303) 979-6023

CA No. **Unit:**

WELL NAME	SEC	TWN	RNG	API NO	ENTITY NO	LEASE TYPE	WELL TYPE	WELL STATUS
SEE ATTACHED LIST								

OPERATOR CHANGES DOCUMENTATION

Enter date after each listed item is completed

1. (R649-8-10) Sundry or legal documentation was received from the **FORMER** operator on: 6/3/2010
2. (R649-8-10) Sundry or legal documentation was received from the **NEW** operator on: 6/3/2010
3. The new company was checked on the **Department of Commerce, Division of Corporations Database on:** 5/10/2010

4a. Is the new operator registered in the State of Utah: Business Number: 7624076-0142

5a. (R649-9-2)Waste Management Plan has been received on: Requested 9/13/2010

5b. Inspections of LA PA state/fee well sites complete on: n/a

5c. Reports current for Production/Disposition & Sundries on: ok

6. **Federal and Indian Lease Wells:** The BLM and or the BIA has approved the merger, name change, or operator change for all wells listed on Federal or Indian leases on: BLM not yet BIA
7. **Federal and Indian Units:**
   The BLM or BIA has approved the successor of unit operator for wells listed on: n/a
8. **Federal and Indian Communization Agreements ("CA"):**
   The BLM or BIA has approved the operator for all wells listed within a CA on: n/a
9. **Underground Injection Control ("UIC")** Division has approved UIC Form 5 Transfer of Authority to **Inject,** for the enhanced/secondary recovery unit/project for the water disposal well(s) listed on: * Being held

DATA ENTRY:

1. Changes entered in the **Oil and Gas Database on:** 6/30/2010
2. Changes have been entered on the **Monthly Operator Change Spread Sheet on:** 6/30/2010
3. Bond information entered in RBDMS on: 6/30/2010
4. Fee/State wells attached to bond in RBDMS on: 6/30/2010
5. Injection Projects to new operator in RBDMS on: *
6. Receipt of Acceptance of Drilling Procedures for APD/New on: 6/30/2010

BOND VERIFICATION:

1. Federal well(s) covered by Bond Number: B005638
2. Indian well(s) covered by Bond Number: n/a

3a. (R649-3-1) The **NEW** operator of any state/fee well(s) listed covered by Bond Number B005639 and B005650

3b. The **FORMER** operator has requested a release of liability from their bond on: n/a

LEASE INTEREST OWNER NOTIFICATION:

4. (R649-2-10) The **NEW** operator of the fee wells has been contacted and informed by a letter from the Division of their responsibility to notify all interest owners of this change on: 6/30/2010

COMMENTS:

FORM 9

STATE OF UTAH
DEPARTMENT OF NATURAL RESOURCES
DIVISION OF OIL, GAS AND MINING

5. LEASE DESIGNATION AND SERIAL NUMBER:

SUNDRY NOTICES AND REPORTS ON WELLS

6. IF INDIAN, ALLOTTEE OR TRIBE NAME:

Do not use this form for proposals to drill new wells, significantly deepen existing wells below current bottom-hole depth, reenter plugged wells, or to drill horizontal laterals. Use APPLICATION FOR PERMIT TO DRILL form for such proposals.

7. UNIT or CA AGREEMENT NAME:

1. TYPE OF WELL: OIL WELL ☐ GAS WELL ☑ OTHER _____

8. WELL NAME and NUMBER: See Attached List

2. NAME OF OPERATOR: Blue Tip Castlegate, Inc. N3680

9. API NUMBER:

3. ADDRESS OF OPERATOR: 15810 Park Ten Place - Ste 160 CITY Houston STATE TX ZIP 77084

PHONE NUMBER: (303) 979-6023

10. FIELD AND POOL, OR WILDCAT:

4. LOCATION OF WELL

FOOTAGES AT SURFACE:

COUNTY: Carbon

QTR/QTR, SECTION, TOWNSHIP, RANGE, MERIDIAN:

STATE: UTAH

11. CHECK APPROPRIATE BOXES TO INDICATE NATURE OF NOTICE, REPORT, OR OTHER DATA

TYPE OF SUBMISSION	TYPE OF ACTION		
☑ NOTICE OF INTENT (Submit in Duplicate)	☐ ACIDIZE	☐ DEEPEN	☐ REPERFORATE CURRENT FORMATION
Approximate date work will start:	☐ ALTER CASING	☐ FRACTURE TREAT	☐ SIDETRACK TO REPAIR WELL
4/1/2010	☐ CASING REPAIR	☐ NEW CONSTRUCTION	☐ TEMPORARILY ABANDON
	☐ CHANGE TO PREVIOUS PLANS	☑ OPERATOR CHANGE	☐ TUBING REPAIR
	☐ CHANGE TUBING	☐ PLUG AND ABANDON	☐ VENT OR FLARE
☐ SUBSEQUENT REPORT (Submit Original Form Only)	☐ CHANGE WELL NAME	☐ PLUG BACK	☐ WATER DISPOSAL
Date of work completion:	☐ CHANGE WELL STATUS	☐ PRODUCTION (START/RESUME)	☐ WATER SHUT-OFF
	☐ COMMINGLE PRODUCING FORMATIONS	☐ RECLAMATION OF WELL SITE	☐ OTHER: _____
	☐ CONVERT WELL TYPE	☐ RECOMPLETE - DIFFERENT FORMATION	

12. DESCRIBE PROPOSED OR COMPLETED OPERATIONS. Clearly show all pertinent details including dates, depths, volumes, etc.

Blue Tip Castlegate, Inc. has acquired all of Pioneer Natural Resources USA, Inc's interest in the Castlegate Field - see attached well list. The effective date of change of operator is April 1, 2010.

Betty Brownson 5/13/10
Betty Brownson Date
Attorney-In-Fact
Pioneer Natural Resources USA, Inc. N5155
1401 17th Street - Suite 1200
Denver, CO 80202
Phone: 303-675-2610

Bruce L Taylor 5/13/10
Bruce L. Taylor Date
~~Manager~~ Vice President BLT
Blue Tip Castlegate, Inc.
15810 Park Ten Place - Suite 160
Houston, TX 77084
Telephone: 303-979-6023
State Bond No.: B005639
BLM Bond No.: B005638

NAME (PLEASE PRINT) Bruce L. Taylor TITLE ~~Manager~~ Vice President BLT

SIGNATURE Bruce L Taylor DATE 5/13/10

(This space for State use only)

APPROVED 6/30/2010
Earlene Russell
Division of Oil, Gas and Mining
Earlene Russell, Engineering Technician

(See Instructions on Reverse Side)

RECEIVED
JUN 03 2010
DIV. OF OIL, GAS & MINING

(5/2000)

PIONEER NATURAL RESOURCES (N5155) to BLUE TIP CASTLEGATE (N3680)

well_name	sec	twp	rng	api	entity	lease	type	stat	C
SHIMMIN TRUST 5-14-12-10	14	120S	100E	4300730122	14175	Fee	GW	P	
CASTLEGATE FED 7-9-12-10	09	120S	100E	4300730137	12991	Federal	GW	P	
JENSEN 9-10-12-10	10	120S	100E	4300730159	12906	Fee	GW	P	
JENSEN 5-10-12-10	10	120S	100E	4300730162	12905	Fee	GW	S	
JENSEN 16-9-12-10	09	120S	100E	4300730163	12904	Fee	GW	P	
JENSEN 11-10-12-10	10	120S	100E	4300730164	11405	Fee	GW	P	
SHIMMIN TRUST 11-11-12-10	11	120S	100E	4300730166	11410	Fee	GW	P	
CASTLEGATE ST 1-16-12-10	16	120S	100E	4300730589	12610	State	GW	P	
JENSEN 1-10-12-10	10	120S	100E	4300730596	12611	Fee	GW	P	
SHIMMIN TRUST 2-11-12-10	11	120S	100E	4300730659	13070	Fee	GW	P	
SHIMMIN TRUST 4-14-12-10	14	120S	100E	4300730662	13071	Fee	GW	P	
SHIMMIN TRUST 1-11-12-10	11	120S	100E	4300730673	12901	Fee	GW	P	
JENSEN 2-10-12-10	10	120S	100E	4300730675	14225	Fee	GW	OPS	
JENSEN 1-9-12-10	09	120S	100E	4300730717	12903	Fee	GW	P	
JENSEN 1-18-12-10	18	120S	100E	4300730718	14226	Fee	GW	P	
JENSEN 1-4-12-10	04	120S	100E	4300730733	13068	Fee	GW	P	
JENSEN 2-8-12-10	08	120S	100E	4300730734	13275	Fee	GW	P	
JENSEN 2-9-12-10	09	120S	100E	4300730735	13317	Fee	GW	P	
JENSEN 1-15-12-10	15	120S	100E	4300730736	13072	Fee	GW	P	
JENSEN 1-8-12-10	08	120S	100E	4300730768	13359	Fee	GW	P	
CASTLEGATE ST 4-16-12-10	16	120S	100E	4300730785	13318	State	GW	P	
JENSEN DEEP 7-15-12-10	15	120S	100E	4300730786	13247	Fee	GW	S	
CASTLEGATE ST 11-16H-12-10	16	120S	100E	4300730961	14224	State	GW	S	
SHIMMIN 11-14-12-10	14	120S	100E	4300730962	14223	Fee	GW	OPS	
JENSEN 23C-9-12-10	09	120S	100E	4300731211	15770	Fee	GW	P	
JENSEN 33C-9-12-10	09	120S	100E	4300731212	15769	Fee	GW	P	
JENSEN 42C-9-12-10	09	120S	100E	4300731213	15766	Fee	GW	P	
JENSEN 43C-9-12-10	09	120S	100E	4300731214	15768	Fee	GW	P	C
CASTLEGATE FED 22C-9-12-10	09	120S	100E	4300731225	15767	Federal	GW	P	
JENSEN 41C-9-12-10	09	120S	100E	4300731452	17246	Fee	GW	OPS	C
JENSEN 14C-10-12-10	10	120S	100E	4300731453	17235	Fee	GW	P	
JENSEN FED 14C-3-12-10	03	120S	100E	4300731495		Federal	GW	APD	C
JENSEN FED 22C-10-12-10	10	120S	100E	4300731498		Federal	GW	APD	C
JENSEN FED 11C-10-12-10	10	120S	100E	4300731499		Federal	GW	APD	C
JENSEN 14C-4-12-10	04	120S	100E	4300731500		Fee	GW	APD	C
JENSEN 44C-4-12-10	04	120S	100E	4300731501		Fee	GW	APD	C
JENSEN 44C-5-12-10	05	120S	100E	4300731502		Fee	GW	APD	C
JENSEN 34C-9-12-10	09	120S	100E	4300731503		Fee	GW	APD	C
JENSEN 31C-9-12-10	09	120S	100E	4300731504		Fee	GW	APD	C
JENSEN 14C-9-12-10	09	120S	100E	4300731505		Fee	GW	APD	C
JENSEN 11C-9-12-10	09	120S	100E	4300731506		Fee	GW	APD	C
JENSEN 24C-9-12-10	09	120S	100E	4300731507		Fee	GW	APD	C
JENSEN ST 11C-34-11-9	34	110S	090E	4304930024	17071	State	GW	S	C

Division of Oil, Gas and Mining
Operator Change/Name Change Worksheet-for State use only

Effective Date: 7/1/2016

FORMER OPERATOR:	NEW OPERATOR:
Blue Tip Castlegate, Inc. 15810 Park Ten Place, Suite 160 Houston TX 77084	Liberty Pioneer Energy Sources, Inc. 1411 East 840 North Orem UT 84097
CA Number(s):	Unit(s): N/A

WELL INFORMATION:

Well Name	Sec	TWN	RNG	API	Entity	Mineral	Surface	Type	Status
See Attached List									

OPERATOR CHANGES DOCUMENTATION:

1. Sundry or legal documentation was received from the **FORMER** operator on: 7/21/2016
2. Sundry or legal documentation was received from the **NEW** operator on: 7/21/2016
3. New operator Division of Corporations Business Number: 6353640-0143

REVIEW:

1. Surface Agreement Sundry from **NEW** operator on Fee Surface wells received on: N/A
2. Receipt of Acceptance of Drilling Procedures for APD on: N/A
3. Reports current for Production/Disposition & Sundries: 8/26/2016
4. OPS/SI/TA well(s) reviewed for full cost bonding: 8/26/2016
5. UIC5 on all disposal/injection/storage well(s) approved on: 8/26/2016
6. Surface Facility(s) included in operator change: N/A
7. Inspections of PA state/fee well sites complete on (only upon operators request): N/A

NEW OPERATOR BOND VERIFICATION:

1. Federal well(s) covered by Bond Number: ~~N/A~~ UTB000334
2. Indian well(s) covered by Bond Number: N/A
3.State/fee well(s) covered by Bond Number(s): RLB0012097

DATA ENTRY:

1. Well(s) update in the **OGIS** on: 8/26/2016
2. Entity Number(s) updated in **OGIS** on: 8/26/2016
3. Unit(s) operator number update in **OGIS** on: N/A
4. Surface Facilities update in **OGIS** on: N/A
5. State/Fee well(s) attached to bond(s) in **RBDMS** on: 8/26/2016
6. Surface Facilities update in **RBDMS** on: N/A

COMMENTS:

From: Blue Tip Castlegate, Inc.
To: Liberty Pioneer Energy Source, Inc.
Effective: 7/1/2016

Well Name	Sec	TWN	RNG	API Number	Entity	Mineral	Surface	Type	Status
CASTLEGATE ST 1-35-12-10 WD	35	110S	100E	4301332308	13472	State	State	WD	A
JENSEN 9-10-12-10	10	120S	100E	4300730159	12906	Fee	Fee	GW	P
JENSEN 5-10-12-10	10	120S	100E	4300730162	12905	Fee	Fee	GW	P
JENSEN 16-9-12-10	9	120S	100E	4300730163	12904	Fee	Fee	GW	P
JENSEN 11-10-12-10	10	120S	100E	4300730164	11405	Fee	Fee	GW	P
CASTLEGATE ST 1-16-12-10	16	120S	100E	4300730589	12610	State	State	GW	P
JENSEN 1-10-12-10	10	120S	100E	4300730596	12611	Fee	Fee	GW	P
JENSEN 1-9-12-10	9	120S	100E	4300730717	12903	Fee	Fee	GW	P
JENSEN 2-9-12-10	9	120S	100E	4300730735	13317	Fee	Fee	GW	P
JENSEN 1-15-12-10	15	120S	100E	4300730736	13072	Fee	Fee	GW	P
JENSEN 1-8-12-10	8	120S	100E	4300730768	13359	Fee	Fee	GW	P
JENSEN DEEP 7-15-12-10	15	120S	100E	4300730786	13247	Fee	Fee	GW	P
JENSEN 23C-9-12-10	9	120S	100E	4300731211	15770	Fee	Fee	GW	P
JENSEN 33C-9-12-10	9	120S	100E	4300731212	15769	Fee	Fee	GW	P
JENSEN 43C-9-12-10	9	120S	100E	4300731214	15768	Fee	Fee	GW	P
CASTLEGATE FED 22C-9-12-10	9	120S	100E	4300731225	15767	Federal	Federal	GW	P
JENSEN 41C-9-12-10	9	120S	100E	4300731452	17246	Fee	Fee	GW	P
JENSEN 14C-10-12-10	10	120S	100E	4300731453	17235	Fee	Fee	GW	P
JENSEN FED 6-10-12-10	10	120S	100E	4300750177	18209	Federal	Fee	GW	P
SHIMMIN TRUST 5-14-12-10	14	120S	100E	4300730122	14175	Fee	Fee	GW	S
CASTLEGATE FED 7-9-12-10	9	120S	100E	4300730137	12991	Federal	Federal	GW	S
SHIMMIN TRUST 11-11-12-10	11	120S	100E	4300730166	11410	Fee	Fee	GW	S
SHIMMIN TRUST 2-11-12-10	11	120S	100E	4300730659	13070	Fee	Fee	GW	S
SHIMMIN TRUST 4-14-12-10	14	120S	100E	4300730662	13071	Fee	Fee	GW	S
SHIMMIN TRUST 1-11-12-10	11	120S	100E	4300730673	12901	Fee	Fee	GW	S
JENSEN 1-18-12-10	18	120S	100E	4300730718	14226	Fee	Fee	GW	S
JENSEN 1-4-12-10	4	120S	100E	4300730733	13068	Fee	Fee	GW	S
JENSEN 2-8-12-10	8	120S	100E	4300730734	13275	Fee	Fee	GW	S
CASTLEGATE ST 4-16-12-10	16	120S	100E	4300730785	13318	State	State	GW	S
CASTLEGATE ST 11-16H-12-10	16	120S	100E	4300730961	14224	State	State	GW	S
JENSEN 42C-9-12-10	9	120S	100E	4300731213	15766	Fee	Fee	GW	S
JENSEN 2C-9	9	120S	100E	4300750179	18242	Fee	Fee	GW	S
JENSEN ST 11C-34-11-9	34	110S	090E	4304930024	17071	State	Fee	GW	S

FORM 9

STATE OF UTAH
DEPARTMENT OF NATURAL RESOURCES
DIVISION OF OIL, GAS AND MINING

SUNDRY NOTICES AND REPORTS ON WELLS

Do not use this form for proposals to drill new wells, significantly deepen existing wells below current bottom-hole depth, reenter plugged wells, or to drill horizontal laterals. Use APPLICATION FOR PERMIT TO DRILL form for such proposals.

5. LEASE DESIGNATION AND SERIAL NUMBER: SEE ATTACHED LIST
6. IF INDIAN, ALLOTTEE OR TRIBE NAME:
7. UNIT or CA AGREEMENT NAME:
8. WELL NAME and NUMBER: SEE ATTACHED LIST
9. API NUMBER: SEE ATTACHED LIST
10. FIELD AND POOL, OR WILDCAT:

1. TYPE OF WELL: OIL WELL ☐ GAS WELL ☒ OTHER _____

2. NAME OF OPERATOR: Liberty Pioneer Energy Source, Inc.

3. ADDRESS OF OPERATOR: 1411 E 840 N CITY Orem STATE UT ZIP 84097 PHONE NUMBER: (801)224-4771

4. LOCATION OF WELL

FOOTAGES AT SURFACE: SEE ATTACHED LIST COUNTY:

QTR/QTR, SECTION, TOWNSHIP, RANGE, MERIDIAN: STATE: UTAH

11. CHECK APPROPRIATE BOXES TO INDICATE NATURE OF NOTICE, REPORT, OR OTHER DATA

TYPE OF SUBMISSION	TYPE OF ACTION		
☐ NOTICE OF INTENT (Submit in Duplicate)	☐ ACIDIZE	☐ DEEPEN	☐ REPERFORATE CURRENT FORMATION
Approximate date work will start:	☐ ALTER CASING	☐ FRACTURE TREAT	☐ SIDETRACK TO REPAIR WELL
	☐ CASING REPAIR	☐ NEW CONSTRUCTION	☐ TEMPORARILY ABANDON
	☐ CHANGE TO PREVIOUS PLANS	☐ OPERATOR CHANGE	☐ TUBING REPAIR
	☐ CHANGE TUBING	☐ PLUG AND ABANDON	☐ VENT OR FLARE
☒ SUBSEQUENT REPORT (Submit Original Form Only)	☐ CHANGE WELL NAME	☐ PLUG BACK	☐ WATER DISPOSAL
Date of work completion:	☐ CHANGE WELL STATUS	☐ PRODUCTION (START/RESUME)	☐ WATER SHUT-OFF
	☐ COMMINGLE PRODUCING FORMATIONS	☐ RECLAMATION OF WELL SITE	☐ OTHER: _____
	☐ CONVERT WELL TYPE	☐ RECOMPLETE - DIFFERENT FORMATION	

12. DESCRIBE PROPOSED OR COMPLETED OPERATIONS. Clearly show all pertinent details including dates, depths, volumes, etc.

CHANGE OF OPERATOR

PREVIOUS OPERATOR:
Blue Tip Castlegate, Inc. N3680
15810 Park Ten Place - Suite 160
Houston, TX 77084
Phone (281) 994-3800

Operator Number N3680

By: Bruce L. Taylor
Bruce L. Taylor, Vice President

NEW OPERATOR:
Liberty Pioneer Energy Source, Inc. N2855
1411 East 840 North
Orem, UT 84097
Phone (801) 224-4771

Operator Number N2855

RECEIVED
JUL 21 2016
DIV. OF OIL, GAS & MINING

Be advised that Liberty Pioneer Energy Source, Inc. is responsible under the terms and conditions of the related leases for the operations conducted upon the leased lands. Bond coverage is covered by Bond No. RLB0012097.

NAME (PLEASE PRINT) Kimball Hodges TITLE Vice President of Liberty Pioneer Energy Source, Inc.

SIGNATURE _____ DATE 7/18/16

(This space for State use only)

APPROVED
AUG 26 2016
DIV. OIL GAS & MINING
BY: Rachel Medina

(5/2000) (See Instructions on Reverse Side)

ATTACHED LIST to Change of Operator Sundry Notice

BTC WELL NUMBER	WELL NAME AND NUMBER	LEGAL DESCRIPTION	OPERATOR	API	COUNTY	STATE
2080001	JENSEN 1-4-12-10	Salt Lake Meridian T12S R10E Sec 04: SWSE	BLUE TIP CASTLEGATE INC.	43-007-30733-0000	CARBON	UTAH
2080002	JENSEN 1-8-12-10	Salt Lake Meridian T12S R10E Sec 08: NESE	BLUE TIP CASTLEGATE INC.	43-007-30768-0000	CARBON	UTAH
2080003	JENSEN 2-8-12-10	Salt Lake Meridian T12S R10E Sec 08: NENE	BLUE TIP CASTLEGATE INC.	43-007-30734-0000	CARBON	UTAH
2080004	CASTLEGATE FED 22C-9-12-10	Salt Lake Meridian T12S R10E Sec 09: SENW	BLUE TIP CASTLEGATE INC.	43-007-31225-0000	CARBON	UTAH
2080005	CASTLEGATE FED 7-9-12-10	Salt Lake Meridian T12S R10E Sec 09: SWNE	BLUE TIP CASTLEGATE INC.	43-007-30137-0000	CARBON	UTAH
2080006	JENSEN 1-9-12-10	Salt Lake Meridian T12S R10E Sec 09: NWSW	BLUE TIP CASTLEGATE INC.	43-007-30717-0000	CARBON	UTAH
2080007	JENSEN 2-9-12-10	Salt Lake Meridian T12S R10E Sec 09: NENW	BLUE TIP CASTLEGATE INC.	43-007-30735-0000	CARBON	UTAH
2080008	JENSEN 16-9-12-10	Salt Lake Meridian T12S R10E Sec 09: SESE	BLUE TIP CASTLEGATE INC.	43-007-30163-0000	CARBON	UTAH
2080009	JENSEN 23C-9-12-10	Salt Lake Meridian T12S R10E Sec 09: NESW	BLUE TIP CASTLEGATE INC.	43-007-31211-0000	CARBON	UTAH
2080010	JENSEN 33C-9-12-10	Salt Lake Meridian T12S R10E Sec 09: NWSE	BLUE TIP CASTLEGATE INC.	43-007-31212-0000	CARBON	UTAH
2080011	JENSEN 42C-9-12-10	Salt Lake Meridian T12S R10E Sec 09: SENE	BLUE TIP CASTLEGATE INC.	43-007-31213-0000	CARBON	UTAH
2080012	JENSEN 43C-9-12-10	Salt Lake Meridian T12S R10E Sec 09: NESE	BLUE TIP CASTLEGATE INC.	43-007-31214-0000	CARBON	UTAH
2080013	JENSEN 1-10-12-10	Salt Lake Meridian T12S R10E Sec 10: NWSW	BLUE TIP CASTLEGATE INC.	43-007-30596-0000	CARBON	UTAH
2080014	JENSEN 5-10-12-10	Salt Lake Meridian T12S R10E Sec 10: SWNW	BLUE TIP CASTLEGATE INC.	43-007-30162-0000	CARBON	UTAH
2080015	JENSEN 11-10-12-10	Salt Lake Meridian T12S R10E Sec 10: NESW	BLUE TIP CASTLEGATE INC.	43-007-30164-0000	CARBON	UTAH

15

ATTACHED LIST to Change of Operator Sundry Notice

BTC WELL NUMBER	WELL NAME AND NUMBER	LEGAL DESCRIPTION	OPERATOR	API	COUNTY	STATE
2080016	JENSEN 14C-10-12-10	Salt Lake Meridian T12S R10E Sec 10: SWSW	BLUE TIP CASTLEGATE INC.	43-007-31453-0000	CARBON	UTAH
2080017	SHIMMIN TRUST 1-11-12-10	Salt Lake Meridian T12S R10E Sec 11: SWSW	BLUE TIP CASTLEGATE INC.	43-007-30673-0000	CARBON	UTAH
2080018	SHIMMIN TRUST 2-11-12-10	Salt Lake Meridian T12S R10E Sec 11: SESE	BLUE TIP CASTLEGATE INC.	43-007-30659-0000	CARBON	UTAH
2080019	SHIMMIN TRUST 4-14-12-10	Salt Lake Meridian T12S R10E Sec 14: SENW	BLUE TIP CASTLEGATE INC.	43-007-30662-0000	CARBON	UTAH
2080020	SHIMMIN TRUST 5-14-12-10	Salt Lake Meridian T12S R10E Sec 14: NWNE	BLUE TIP CASTLEGATE INC.	43-007-30122-0000	CARBON	UTAH
2080021	JENSEN 1-15-12-10	Salt Lake Meridian T12S R10E Sec 15: SWNE	BLUE TIP CASTLEGATE INC.	43-007-30736-0000	CARBON	UTAH
2080022	JENSEN DEEP 7-15-12-10	Salt Lake Meridian T12S R10E Sec 15: SWNE	BLUE TIP CASTLEGATE INC.	43-007-30786-0000	CARBON	UTAH
2080023	CASTLEGATE ST 1-16-12-10	Salt Lake Meridian T12S R10E Sec 16: NWNE	BLUE TIP CASTLEGATE INC.	43-007-30589-0000	CARBON	UTAH
2080024	CASTLEGATE ST 4-16-12-10	Salt Lake Meridian T12S R10E Sec 16: SENW	BLUE TIP CASTLEGATE INC.	43-007-30785-0000	CARBON	UTAH
2080025	JENSEN 1-18-12-10	Salt Lake Meridian T12S R10E Sec 18: NESE	BLUE TIP CASTLEGATE INC.	43-007-30718-0000	CARBON	UTAH
2080026	CASTLEGATE ST 1-35-12-10 WD	Salt Lake Meridian T11S R10E Sec 35: SWSW	BLUE TIP CASTLEGATE INC.	43-013-32308-0000	DUCHESNE	UTAH
2080027	CASTLEGATE ST 11-16H-12-10	Salt Lake Meridian T12S R10E Sec 16: NWNW	BLUE TIP CASTLEGATE INC.	43-007-30961-0000	CARBON	UTAH
2080028	JENSEN STATE 11C-34-11-9	Salt Lake Meridian T11S R9E Sec 34: NWNW	BLUE TIP CASTLEGATE INC.	43-049-30024-0000	UTAH	UTAH
2080030	JENSEN 41C-9-12-10	Salt Lake Meridian T12S R10E Sec 09: NENE	BLUE TIP CASTLEGATE INC.	43-007-31452-0000	CARBON	UTAH

29

ATTACHED LIST to Change of Operator Sundry Notice

BTC WELL NUMBER	WELL NAME AND NUMBER	LEGAL DESCRIPTION	OPERATOR	API	COUNTY	STATE
2080032	JENSEN 9-10-12-10	Salt Lake Meridian T12S R10E Sec 10: NESE	BLUE TIP CASTLEGATE INC.	43-007-30159-0000	CARBON	UTAH
2080033	SHIMMIN TRUST 11-11-12-10	Salt Lake Meridian T12S R10E Sec 11: NESW	BLUE TIP CASTLEGATE INC.	43-007-30166-0000	CARBON	UTAH
2080042	JENSEN 2C-9-12-10	Salt Lake Meridian T12S R10E Sec 9: NW4NE4	BLUE TIP CASTLEGATE INC.	43-007-01790-0000 50179	CARBON	UTAH
2080043	JENSEN FED 6-10-12-10	Salt Lake Meridian T12S R10E Sec 6: SE4NW4	BLUE TIP CASTLEGATE INC.	43-007-50177-0000	CARBON	UTAH

33

STATE OF UTAH
DEPARTMENT OF NATURAL RESOURCES
DIVISION OF OIL, GAS AND MINING

UIC FORM 5

TRANSFER OF AUTHORITY TO INJECT

Well Name and Number Castlegate St 1-35-12-10	API Number 4301332308
Location of Well Footage : 540' FSL, 1135' FWL County : Duchesne QQ, Section, Township, Range: SWSW 35 11S 10E State : UTAH	Field or Unit Name Castlegate Lease Designation and Number ML-48822

EFFECTIVE DATE OF TRANSFER: 7/1/2016

CURRENT OPERATOR

Company: Blue Tip Castlegate, Inc.
Address: P. O. Box 842317
city Houston state TX zip 77284
Phone: (281) 944-3800
Comments:

Name: Bruce L. Taylor
Signature: Bruce L Taylor
Title: Secretary
Date: 7/1/2016

NEW OPERATOR

Company: WEM Castlegate, LLC
Address: 1411 East 840 North
city Orem state UT zip 84097
Phone:
Comments:

Name: Cory Kusen
Signature: Cory
Title: Manager
Date: 7/11/16

(This space for State use only)

Transfer approved by: Dan Jarvis
Title: UIC Geologist

Approval Date: 8/3/16

Comments:

RECEIVED
JUL 21 2016
DIV. OF OIL, GAS & MINING

(5/2000)

LIBERTY PIONEER

ENERGY ★ SOURCE

Dustin K. Doucet
Petroleum Engineer
Division of Oil, Gas and Mining
1594 West North Temple, Ste 1210
Salt Lake City, Utah 84116

RE: Bonding for Castlegate Field Wells

August 15, 2016

Dustin:

Blue Tip Energy Management, LLC was the previous operator and bondholder of the Castle Gate Field and associated wells listed below. Liberty Pioneer Energy Source, Inc. ("LPES") has submitted the necessary paperwork to take over as the new operator of theses wells. Per our recent communications we would like to make the following proposal pertaining to the bonding of the wells listed below so that all of the wells in the field will be covered by LPES blanket bond #RLB0012097.

1) LPES plans to P&A the following wells prior to November 1, 2016:

13318 CASTLEGATE ST 4-16-12-10
14224 CASTLEGATE ST 11-16H-12-10

2) LPES is currently getting pricing to build a pipeline to the following well which is believed to be capable of production. If pricing is reasonable, LPES will propose production testing and flaring. We will notify you of our decision to either run a pipeline or plug and abandon this well before the end of 2016. If the decision is to produce, LPES will commence the pipeline permitting process before the end of 2016:

17071 JENSEN STATE 11C-34-11-9

3) Wells that are currently producing or will be returned to producing status by October 1, 2016:

13070	SHIMMIN TRUST 2-11-12-10
13275	JENSEN 2-8-12-10
13071	SHIMMIN TRUST 4-14-12-10
13068	JENSEN 1-4-12-10
18242	JENSEN 2C-9-12-10
12991	CASTLEGATE FED 7-9-12-10
11405	JENSEN 11-10-12-10
12610	CASTLEGATE ST 1-16-12-10
12611	JENSEN 1-10-12-10
12903	JENSEN 1-9-12-10
12904	JENSEN 16-9-12-10
12905	JENSEN 5-10-12-10
12906	JENSEN 9-10-12-10
13072	JENSEN 1-15-12-10
13247	JENSEN DEEP 7-15-12-10
13317	JENSEN 2-9-12-10
13359	JENSEN 1-8-12-10
15766	JENSEN 42C-9-12-10
15767	CASTLEGATE FED 22C-9-12-10
15768	JENSEN 43C-9-12-10
15769	JENSEN 33C-9-12-10
15770	JENSEN 23C-9-12-10
17235	JENSEN 14C-10-12-10
17246	JENSEN 41C-9-12-10
14226	JENSEN 1-18-12-10
11410	SHIMMIN TRUST 11-11-12-10
12901	SHIMMIN TRUST 1-11-12-10
14175	SHIMMIN TRUST 5-14-12-10
18209	JENSEN 6-10-12-10

Thanks for your help. Please let us know if you have any questions.

Sincerely,

Daniel R. Gunnell
President
Liberty Pioneer Energy Source, Inc.
1411 East 840 North
Orem, UT 84097

Rachel Medina <rachelmedina@utah.gov>

Fwd: LPES plans for the Castlegate field wells/Bonding

2 messages

Dayne Doucet <daynedoucet@utah.gov> Wed, Aug 17, 2016 at 11:46 AM
To: Rachel Medina <rachelmedina@utah.gov>, Randy Thackeray <randythackeray@utah.gov>

FYI

——— Forwarded message ———
From: **Daniel Gunnell** <dgunnell@rockiesstandard.com>
Date: Wed, Aug 17, 2016 at 9:40 AM
Subject: Re: LPES plans for the Castlegate field wells/Bonding
To: Dustin Doucet <dustindoucet@utah.gov>
Cc: Brad Gunnell <bgunnell@rockiesstandard.com>, Cory Jensen <cjensen@rockiesstandard.com>, Kimball Hodges <khodges@rockiesstandard.com>, Dayne Doucet <daynedoucet@utah.gov>, Joshua Payne <joshuapayne@utah.gov>

Dustin:

Thanks for your help with this! Please find Bond Proposal Letter attached.

If there is anything else you need please let me know. The Blue Tip guys are anxious to get their bond released.

Let me know if I need to send a hard copy of the letter.

Best,

Danny

On Mon, Aug 8, 2016 at 9:24 AM, Dustin Doucet <dustindoucet@utah.gov> wrote:

> Danny,
>
> Yes if you would just edit your previous plan and resubmit so there is no confusion. I think that would make it cleaner. If you decide to put a well online and have it online by the plugging deadline, then that should be fine.
>
> Dustin
>
> On Tue, Aug 2, 2016 at 4:31 PM, Daniel Gunnell <dgunnell@rockiesstandard.com> wrote:
>
>> Dustin:
>>
>> Sorry for not getting back to you on this until now. There maybe a couple of wells that we may come back to you specifically on, but I think that we have now got a pretty good go forward plan that will meet and exceed your end of the year time frame for getting the wells in categories 2 and 3 in production.
>>
>> There is one material change to my previous email that we want to make you aware of - instead of plugging the 11C-34 we are seriously considering running a pipeline to it and bringing online... not a final decision yet, but we are have got and are getting additional bids, and designing a test plan to better understand what production would look like.
>>
>> Do I need to submit a formal letter with dates of Nov 1 for plugging and end of year to get wells on production under our existing bonds or are these emails sufficient?
>>
>> Thanks for your help!
>>
>> Best,
>>
>> Danny

What time do you think you need? I would think by the end of the year max. If you can line out more justification, I'm open to listening to the reasoning.

Dustin

On Thu, Jun 30, 2016 at 12:21 PM, Daniel Gunnell <dgunnell@rockiesstandard.com> wrote:

Dustin:

Sounds good. Thanks for your help.

Can we push back just a little to get as much time as possible for shut in wells that we need to come up with a plan for or plug (#2 in my original email?) - how much beyond Oct 2016 could you give us? We are going to be really busy so as much extra time as you can give really helps... we are reclaiming those evaporation ponds immediately, taking over operations, retrofitting the plant, plugging the identified wells, and ramping up production by reworking multiple shut-in wells that are we have already reviewed.

Let me know and thanks again.

Best,

Danny

On Thu, Jun 30, 2016 at 10:30 AM, Dustin Doucet <dustindoucet@utah.gov> wrote:

Danny,

I would be o.k. with the timing and plan on part 1. The timing on part 2 does not work. Those have been SI/TA anywhere from 2.5 to 5 years. Did you mean October 2016? Our discussions were if you had a plan to produce or plug within a short period (meaning a few months), then we could forego increased bonding but increased bonding would be necessary if that wasn't accomplished. Part 3 would be similar to part 2 on the wells that have been SI/TA. The producing ones would probably be fine as you have 1 year allowed by rule (see below).

Production data through Jan 2016

13070	SHIMMIN TRUST 2-11-12-10	SI since Sep 2014
13275	JENSEN 2-8-12-10	SI since Nov 2015
13071	SHIMMIN TRUST 4-14-12-10	SI since Dec 2015
13068	JENSEN 1-4-12-10	Produced 1 day in Jan 2016
18242	JENSEN 2C-9-12-10	Producing
12991	CASTLEGATE FED 7-9-12-10	Producing
11405	JENSEN 11-10-12-10	Producing
12610	CASTLEGATE ST 1-16-12-10	Producing
12611	JENSEN 1-10-12-10	Producing
12903	JENSEN 1-9-12-10	Producing
12904	JENSEN 16-9-12-10	Producing
12905	JENSEN 5-10-12-10	Producing
12906	JENSEN 9-10-12-10	Producing
13072	JENSEN 1-15-12-10	Produced 1 day in Jan 2016
13247	JENSEN DEEP 7-15-12-10	Produced 1 day in Jan 2016

13359 JENSEN 1-8-12-10 Producing

15766 JENSEN 42C-9-12-10 Producing

15767 CASTLEGATE FED 22C-9-12-10 Producing

15768 JENSEN 43C-9-12-10 Producing

15769 JENSEN 33C-9-12-10 Producing

15770 JENSEN 23C-9-12-10 SI since Nov 2015

17235 JENSEN 14C-10-12-10 Producing

17246 JENSEN 41C-9-12-10 Producing

18209 JENSEN 6-10-12-10 Producing

On Fri, Jun 24, 2016 at 11:28 AM, Daniel Gunnell <dgunnell@rockiesstandard.com> wrote:

Dustin:

Per our recent conversation, I wanted to informally run our plans/bonding proposal for the Castle Gate Field by you for your comment prior to submitting a final proposal. Here is what we are considering:

Blue Tip Energy Management, LLC ("Blue Tip"), is the current operator and bondholder, of the Castle Gate Field and associated wells listed below ("Wells"). LPES should take over as the new operator effective July 1 2016. In anticipation of the transfer of operations and per our recent phone conversation we would like to make the following proposal pertaining to the LPES bonding of the wells listed below so that all of the wells in the field will be covered by LPES blanket bond #RLB0012097.

1) LPES will P&A the following wells prior to November 1, 2016:

17071 JENSEN STATE 11C-34-11-9

14224 CASTLEGATE ST 11-16H-12-10

2) LPES will evaluate and propose a go forward plan after evaluation on the following shut-in wells prior to October 1 2017:

13318 CASTLEGATE ST 4-16-12-10

14226 JENSEN 1-18-12-10

11410 SHIMMIN TRUST 11-11-12-10

12901 SHIMMIN TRUST 1-11-12-10

14175 SHIMMIN TRUST 5-14-12-10

13070 SHIMMIN TRUST 2-11-12-10

13275 JENSEN 2-8-12-10

13071 SHIMMIN TRUST 4-14-12-10

13068 JENSEN 1-4-12-10

18242 JENSEN 2C-9-12-10

12991 CASTLEGATE FED 7-9-12-10

11405 JENSEN 11-10-12-10

12610 CASTLEGATE ST 1-16-12-10

12611 JENSEN 1-10-12-10

12903 JENSEN 1-9-12-10

12904 JENSEN 16-9-12-10

12905 JENSEN 5-10-12-10

12906 JENSEN 9-10-12-10

13072 JENSEN 1-15-12-10

13247 JENSEN DEEP 7-15-12-10

13317 JENSEN 2-9-12-10

13359 JENSEN 1-8-12-10

15766 JENSEN 42C-9-12-10

15767 CASTLEGATE FED 22C-9-12-10

15768 JENSEN 43C-9-12-10

15769 JENSEN 33C-9-12-10

15770 JENSEN 23C-9-12-10

17235 JENSEN 14C-10-12-10

17246 JENSEN 41C-9-12-10

18209 JENSEN 6-10-12-10

If this proposal is acceptable please let me know and I will submit a formal letter for approval. Thanks for your help.

Best,

Danny

–
Daniel R. Gunnell
1411 East 840 North
Orem, UT 84097
(801) 224-4771

Confidentiality Notice--This electronic transmission and any attached documents or other writings are intended only for the person or entity to which it is addressed and may contain information that is privileged, confidential or otherwise protected from disclosure. Any disclosure, copying, distribution or the taking of any action concerning the contents of this communication or any attachments by anyone other than the named recipient is strictly prohibited.If you have received this communication in error, please consider the communication and any attachments as confidential and immediately notify sender by return e-mail and destroy the communication and any and all attachments.

–
Dustin K. Doucet
Petroleum Engineer
Division of Oil, Gas and Mining
1594 West North Temple, Ste 1210
Salt Lake City, Utah 84116
801.538.5281 (ofc)
801.359.3940 (fax)

web: www.ogm.utah.gov

–
Daniel R. Gunnell
1411 East 840 North
Orem, UT 84097
(801) 224-4771

Confidentiality Notice--This electronic transmission and any attached documents or other writings are intended only for the person or entity to which it is addressed and may contain information that is privileged, confidential or otherwise protected from disclosure. Any disclosure, copying, distribution or the taking of any action concerning the contents of this communication or any attachments by anyone other than the named recipient is strictly prohibited.If you have received this communication in error, please consider the communication and any attachments as confidential and immediately notify sender by return e-mail and destroy the communication and any and all attachments.

–
Dustin K. Doucet
Petroleum Engineer
Division of Oil, Gas and Mining
1594 West North Temple, Ste 1210
Salt Lake City, Utah 84116
801.538.5281 (ofc)
801.359.3940 (fax)

web: www.ogm.utah.gov

--
Daniel R. Gunnell
1411 East 840 North
Orem, UT 84097
(801) 224-4771

Confidentiality Notice–This electronic transmission and any attached documents or other writings are intended only for the person or entity to which it is addressed and may contain information that is privileged, confidential or otherwise protected from disclosure. Any disclosure, copying, distribution or the taking of any action concerning the contents of this communication or any attachments by anyone other than the named recipient is strictly prohibited.If you have received this communication in error, please consider the communication and any attachments as confidential and immediately notify sender by return e-mail and destroy the communication and any and all attachments.

--
Dustin K. Doucet
Petroleum Engineer
Division of Oil, Gas and Mining
1594 West North Temple, Ste 1210
Salt Lake City, Utah 84116
801.538.5281 (ofc)
801.359.3940 (fax)

web: www.ogm.utah.gov

--
Daniel R. Gunnell
1411 East 840 North
Orem, UT 84097
(801) 224-4771

Confidentiality Notice–This electronic transmission and any attached documents or other writings are intended only for the person or entity to which it is addressed and may contain information that is privileged, confidential or otherwise protected from disclosure. Any disclosure, copying, distribution or the taking of any action concerning the contents of this communication or any attachments by anyone other than the named recipient is strictly prohibited.If you have received this communication in error, please consider the communication and any attachments as confidential and immediately notify sender by return e-mail and destroy the communication and any and all attachments.

--
Dayne Doucet
Petroleum Engineer
UDOGM
801-538-5303

Statewide Bond Proposal.pdf
421K

Dustin Doucet <dustindoucet@utah.gov> Wed, Aug 17, 2016 at 2:01 PM
To: Daniel Gunnell <dgunnell@rockiesstandard.com>, Rachel Medina <rachelmedina@utah.gov>
Cc: Brad Gunnell <bgunnell@rockiesstandard.com>, Cory Jensen <cjensen@rockiesstandard.com>, Kimball Hodges <khodges@rockiesstandard.com>, Dayne Doucet <daynedoucet@utah.gov>, Joshua Payne <joshuapayne@utah.gov>

Danny,

I think that looks fine. If the deadlines aren't met we will be looking for full cost bonding in addition to getting the wells back into compliance. I have copied Rachel Medina on this email so she can proceed with the operator change with this plan and conditions. thanks.