Form 3160-3
(December 1990)

SUBMIT IN TRIPLICATE*
(Other instructions on reverse side)

Form approved.
Budget Bureau No. 1004-0136
Expires: December 31, 1991

UNITED STATES
DEPARTMENT OF THE INTERIOR
BUREAU OF LAND MANAGEMENT

APPLICATION FOR PERMIT TO DRILL OR DEEPEN

5. LEASE DESIGNATION AND SERIAL NO.: ~~UTU-76333~~ ML-48233

6. IF INDIAN, ALLOTTEE OR TRIBE NAME: N/A

7. UNIT AGREEMENT NAME: Drunkards Wash UTU67921X

8. FARM OR LEASE NAME, WELL NO.: ~~USA~~ Utah 31-199

9. API WELL NO.:

1a. TYPE OF WORK: DRILL [X] DEEPEN [ ]

b. TYPE OF WELL: OIL WELL [ ] GAS WELL [X] OTHER — SINGLE ZONE [X] MULTIPLE ZONE [ ]

2. NAME OF OPERATOR: RIVER GAS CORPORATION

3. ADDRESS AND TELEPHONE NO.: 1305 So. 100 E. Price, Utah 84501 (801) 637-8876

10. FIELD AND POOL, OR WILDCAT: Drunkards Wash

4. LOCATION OF WELL (Report location clearly and in accordance with any State requirements.*)
At surface: 1125' FSL, 928' FWL
At proposed prod. zone: 343 283

CONFIDENTIAL

11. SEC., T., R., M., OR BLK. AND SURVEY OR AREA: SW/4, SW/4, Sec.31, T14S, R9E, SLB&M

14. DISTANCE IN MILES AND DIRECTION FROM NEAREST TOWN OR POST OFFICE*: 8.6 miles southwest of Price, Utah

12. COUNTY OR PARISH: Carbon

13. STATE: UTAH

15. DISTANCE FROM PROPOSED* LOCATION TO NEAREST PROPERTY OR LEASE LINE, FT. (Also to nearest drig. unit line, if any): 928'

16. NO. OF ACRES IN LEASE: 595.68 acres

17. NO. OF ACRES ASSIGNED TO THIS WELL: 160 acres

18. DISTANCE FROM PROPOSED LOCATION TO NEAREST WELL, DRILLING, COMPLETED, OR APPLIED FOR, ON THIS LEASE, FT.: 2990'

19. PROPOSED DEPTH: 3975'

20. ROTARY OR CABLE TOOLS: Rotary

21. ELEVATIONS (Show whether DF, RT, GR, etc.): GR 6586'

22. APPROX. DATE WORK WILL START*: April 1999

23. PROPOSED CASING AND CEMENTING PROGRAM

SIZE OF HOLE	GRADE, SIZE OF CASING	WEIGHT PER FOOT	SETTING DEPTH	QUANTITY OF CEMENT
14"	12-3/4"	Conductor	25'	
11"	J-55 8-5/8"	24 #/ft	398'	149 sks G+2% CaCl + 1/4# per sack flocel
7-7/8"	N-80 5-1/2"	17 #/ft	3975'	343 sks 50/50 POZ +8%gel+2%CaCl+10%extender. 75 sks "G" thixotropic

AMENDED

Approved by the
Utah Division of
Oil, Gas and Mining
Date: 5/13/99
By: Bradley Hill

5032221.38
4378147.00

~~Federal Approval of this Action is Necessary~~

RECEIVED
SEP 18 1998
DIV OF OIL, GAS & MINING

IN ABOVE SPACE DESCRIBE PROPOSED PROGRAM: If proposal is to deepen, give data present productive zone and proposed new productive zone. If proposal is to drill or deepen directionally, give pertinent data on subsurface locations and measured and true vertical depths. Give blowout preventer program, if any.

24.

SIGNED Don S. Hamilton TITLE Permit Specialist DATE 9/16/98

(This space for Federal or State office use)

PERMIT NO. 43-007-30480 APPROVAL DATE

Application approval does not warrant or certify that the applicant holds legal or equitable title to those rights in the subject lease which would entitle the applicant to conduct operations thereon.

CONDITIONS OF APPROVAL, IF ANY:

APPROVED BY Bradley Hill TITLE BRADLEY G. HILL RECLAMATION SPECIALIST III DATE 10/19/98

*See Instructions On Reverse Side

Title 18 U.S.C. Section 1001, makes it a crime for any person knowingly and willfully to make to any department or agency or the United States any false, fictitious or fraudulent statements or representations as to any matter within its jurisdiction.

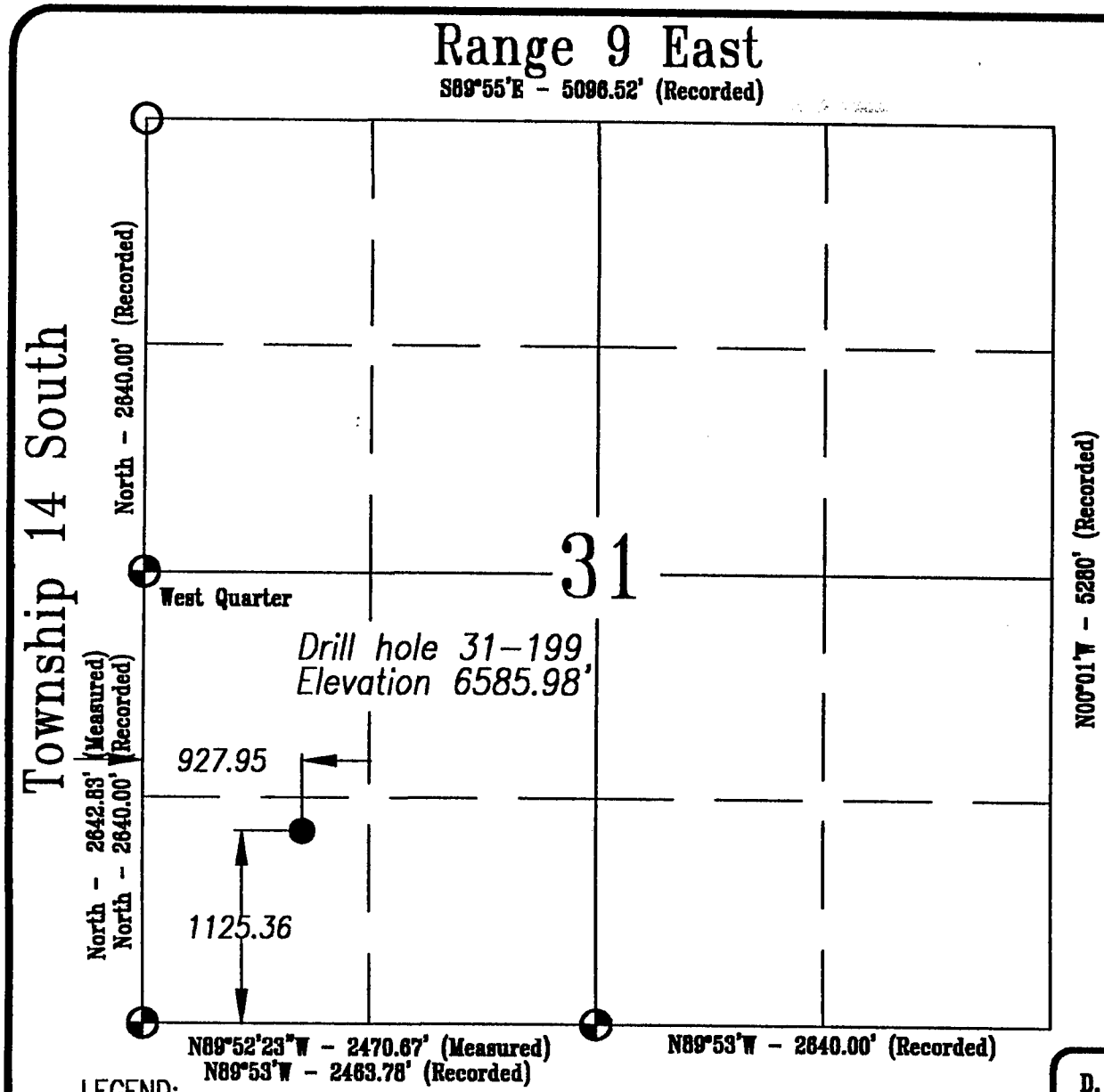

Basis of Bearing:

Basis of Bearing North recorded between the West quarter Corner and the SW Corner of Section 31, Township 14 South, Range 9 East, Salt Lake Base and Meridian.

Basis Of Elevation:

Basis of Elevation of 6577' as indicated in the SE corner of Section 31, Township 14 South, Range 9 East, Salt Lake Base and Meridian, as shown on the Pinnacle Peak Quadrangle 7.5 Minute Series Map.

Description of Location:

Proposed Drill Hole located in the SW 1/4 SW 1/4 of Section 31; 1125.36' North and 927.95' East from the West corner of Section 31, T14S, R9E, Salt Lake Base & Meridian.

Surveyor's Certificate:

I, Daniel W. Peatross, a Registered Licensed Land Surveyor, holding Certificate #259966, State of Utah, do hereby certify that the information on this drawing is true and accurate to the best of my knowledge and belief, and was conducted by myself, as shown hereon.

Registered Land Surveyor
No. 259966
Daniel W. Peatross
State of Utah

Daniel W. Peatross
9/10/98

LEGEND:

- ● *Drill Hole Location*
- ⊕ *Found Section corner monumented w/ Carbon County aluminum cap unless indicated otherwise.*
- ○ *Section Corner (Searched, Not Found)*

SCALE:
250' 0' 500' 1000'

DRAWN BY: D. ROBERTSON	Castle Valley Inc. 3268 South 125 West Price, Utah 84501 (801) 637-2300 FAX (801) 637-2533
CHECKED BY: L.W.J.	
DATE: 9/4/98	
SCALE: 1"=1000'	
JOB NO. 423	
DRAWING NO. A-1	River Gas Corporation Well# 31-199 Section 31, T14S, R9E, S.L.B.&M. Carbon County, Utah
SHEET 1 OF 4	

CONFIDENTIAL

COPY

RGC

RIVER GAS CORPORATION
UTAH OPERATIONS
1305 South 100 East
Price, Utah 84501
Bus. (435) 637-8876
FAX (435) 637-8924

RECEIVED
SEP 18 1998
DIV. OF OIL, GAS & MINING

September 16, 1998

Mr. Eric Jones
Petroleum Engineer
Bureau of Land Management
82 E. Dogwood
Moab, Utah 84532

RE: Application for Permit to Drill-
USA 31-199, SW/4,SW/4, Sect.31
T14S, R09E, SLB & M, Carbon County, Utah

Dear Eric:

Enclosed is the original of the *Application for Permit to Drill* (APD) for the above named well. Included with the APD is the following information:

Exhibit "A"- Survey plat of the proposed well site;

Exhibit "B" - Proposed Location Map with Pipeline, Power, and Road Access;

Exhibit "C" - Drilling Site Layout;

Exhibit "D" - On-site Inspection Checklist;

Exhibit "E" - Production Site Layout;

Exhibit "F" - Typical Road Cross-section;

Exhibit "G" - BOP Diagram;

Exhibit "H" - Typical Wellhead Manifold;

Please accept this letter as River Gas Corporation's written request for confidential treatment of all information contained in and pertaining to this permit application, if said information is eligible for such consideration.

Thank you very much for your timely consideration of this application. Please feel free to contact me if you have any questions.

Sincerely,

Don S. Hamilton

Don S. Hamilton
Permit Specialist

cc: Mr. Don Stephens, BLM, Price, Utah
Mr. Chuck Snure, Texaco
Mr. R.A. Lamarre, Texaco
Mr. Gee Lake, Jr., Dominion Resources
Mr. John Baza, DOGM
Mrs. Tammie Butts, River Gas Corporation
RGC Well File

UT-060-3160-1
December, 1992

Bureau of Land Management
Moab District
Application for Permit to Drill
On-Site Inspection Checklist

Company River Gas Corporation Well No. 31-199

Location: Sec. 31, T 14 S, R 9 E, Lease No. UTU-76333

On-Site Inspection Date: 8/7/98

All operations will be conducted in such a manner that full compliance is made with applicable laws, regulations (43 CFR 3100), Onshore Oil and Gas Orders, the approved plan of operations and the conditions of approval. The operator is fully responsible for the actions of his subcontractors. A copy of these conditions will be furnished to the field representative to ensure compliance.

A. DRILLING PROGRAM

1. Surface Formation and Estimated Formation Tops:
Surface formation: Upper Mancos Shale
Estimated top of Ferron Formation: 3,025'

2. Estimated Depth at Which Oil, Gas, Water or Other Mineral Bearing Zones are Expected to be Encountered

	Depth	Formation
Expected Oil Zones: none		
Expected Gas Zones: Ferron Coal Interval: 3,050'-3,220'		
Expected Water Zones: 3,050'-3,220'		
Expected Mineral Zones: none		

All fresh water and prospectively valuable minerals encountered during drilling will be recorded by depth and will be cased and cemented. When possible, water flow rates will be measured and samples will be taken and analyzed. All oil and gas shows will be tested to determine commercial potential.

3. Pressure Control Equipment- include schematics of the BOP and choke manifold, and describe testing procedures: Quick Test is contracted to test the manifold, blind rams, and B.O.P to 2000 psi. Surface casing is tested to 1 psi/ft. See attachment.

BOP systems will be consistent with API RP 53 and Onshore Oil and Gas Order No. 2. Pressure tests of the surface casing and all BOP equipment potentially subject to pressure will be conducted before drilling the surface casing shoe. Blowout preventer controls will be installed prior to drilling the surface casing shoe and will remain in use until the well is completed or abandoned. Ram preventers shall be inspected and operated each trip (no more than once a day is necessary), and annular preventers shall be inspected and operated weekly to ensure good mechanical working order. These inspections shall be recorded in the drilling log and in the daily drilling report.

4. Casing Program and Auxiliary Equipment - include casing size, weight, grade, thread and coupling, setting depth and condition (new or acceptably reconditioned): Approximately 3975' of 5 ½",17#/ft,N-80,LT&C production casing and approximately 10% of the above setting depth will be 8 5/8", 24#/ft J-55 surface casing.

5. Cement-include the cement type, density, yield, additives and amount used in setting each casing string. Also include the anticipated cement fill-up. If stage cementing, describe techniques: See cement design.

6. Mud Program and Circulating Medium- include mud components and weights. When air drilling, also include: length and location of blooie line; description of the auto ignitor; description of the deduster equipment; and amounts, types and characteristics of stand-by mud: Hole will be drilled with air.

7. Coring, Logging and Testing Program: Bulk Density, Gamma, Neutron Density, Resistivity and Caliper logs will be ran.
Initial opening of drill stem test tools will be restricted to daylight hours.

8. Abnormal Conditions, Bottom Hole Pressures and Potential Hazards- include anticipated bottomhole pressure and/or pressure gradient: No abnormal conditions are anticipated. Formation is slightly over-pressured. Estimated BHP: 1552 psi.

9. Any Other Aspects of this Proposal that should be Addressed:

B. THIRTEEN POINT SURFACE USE PLAN

The dirt contractor will be provided with an approved copy of the surface use plan of operations before initiating construction.

1. Existing Roads:

   a. Proposed route to location (submit a map depicting access and well location).

   b. Location of proposed well in relation to town or other reference point: 8.6 miles southwest of Price, Ut.

   c. Contact the County Road Department for use of county roads. The use of San Juan County roads will require an encroachment permit from the San Juan Road Department.

   d. Plans for improvement and/or maintenance of existing roads:

   e. Other:

2. Planned Access Roads:

   a. Location (centerline): Off of Utah 36-165 access approx:2150'FSL,360'FEL,Sect.36

   b. Length of new access top be constructed: 1600'

   c. Length of existing roads to be upgraded: none

   d. Maximum total disturbed width: 60'

   e. Maximum travel surface width: 25'

f. Maximum grades: 10%

g. Turnouts: N/A

h. Surface materials: In-place residual of Mancos Shale.

i. Drainage (crowning, ditching, culverts, etc): Roads will be crowned with bar ditches on both sides & 4 culverts placed along new road.

j. Cattleguards: N/A

k. Length of new and/or existing roads which lie outside the lease boundary for which a BLM right-of-way is required: N/A

l. Other:

Surface disturbance and vehicular travel will be limited to the approved location access road. Any additional area needed must be approved by the Area Manager advance.

If a right-a-way is necessary, no surface disturbing activities shall take place on the subject right-of-way until the associated APD is approved. The holder will adhere to conditions of approval in the Surface Use Program of the approved APD, relevant to any right-of-way facilities.

If a right-of-way is secured, boundary adjustments in the lease or unit shall automatically amend this right-of-way to include that portion of the facility no longer contained within the lease or unit. In the event of an automatic amendment to this right-of-way grant, the prioron-lease/unit conditions of approval of this facility will not be affected even though they would now apply to facilities outside of the lease/unit as a result of a boundary adjustment. Rental fees, if appropriate shall be recalculated based on the conditions of this grant and the regulations in effect at the time of an automatic amendment.

If the well is productive, the access road will be rehabilitated or brought to Resource (Class III) Road Standards within 60 days of dismantling the rig. If upgraded, the access road must be maintained at these standards until the well is properly abandoned. If this time frame cannot be met, the Area Manager will be notified so that temporary drainage control can be installed along the access road.

3. Location of Existing Wells-on a map, show the location of all water, injection, disposal, producing and drilling wells within a one mile radius of the proposed well, and describe the status of each: See Attachment "B"

4. Location of Production Facilities:

a. On-site facilities: See Attachment "E"

b. Off-site facilities: none

c. Pipelines: N/A

All permanent (in place for six months or longer) structures constructed or installed (including oil well pump jacks) will be painted a flat, nonreflective color to match the standard environmental colors, as determined by the Rocky Mountain Five-State Interagency Committee. All facilities will be painted within six months of installation. Facilities required

by comply with the Occupational Safety and Health Act (OSHA) may be excluded. Colors will be as follows:tan

All site security guidelines identified in 43 CFR § 3163.7-5 and Onshore Oil and Gas Order No. 3 Colors will be as follows: tan

If a gas meter run is constructed, it will be located on lease within 500 feet of the wellhead. The gas flowline will be buried from the wellhead to the meter and will be buried downstream of the meter until it leaves the pad. Meter runs will be housed and/or fenced. The gas meter shall be calibrated prior to first sales and shall be calibrated quarterly thereafter. All gas production and measurement shall comply with the provisions of 43 CFR § 3162. 7-3, Onshore Oil and Gas Order No. 5, and American Gas Association (AGA) Report No. 3.

If a tank battery is constructed on this lease, it will be surrounded by a dike of sufficient capacity to contain 1 ½ times the storage capacity of the largest tank. All loading lines and valves will be placed inside the berm surrounding the tank battery. All oil production and measurement shall conform to the provisions of 43 CFR § 3162.7-3 and Onshore Oil and Gas Order No. 4

Production facilities on location may include a lined or unlined produced water pit as specified in NTL-2B. If water is produced from the well, an NTL-2B application must be submitted.

5. Location and Type of Water Supply:

All water needed for drilling purposes will be obtained from (describe location and/or show on a map): PRWID *Public Water Source

6. Source of Construction Material:

Pad construction material will be obtained from (if the source is Federally owned, show location on a map): Private owner in East Price.
The use of materials under BLM jurisdiction will conform to 43 CFR 3610.2-3.

7. Methods of Handling Waste Disposal:

Describe the methods and locations proposed for safe containment and disposal of waste material, e.g. cuttings, produced water, garbage, sewage, chemicals, etc.

The reserve pit will be lined with (native material, bentonite, synthetic material): Pit will be lined with native material unless designated otherwise by BLM officers prior to construction.

The reserve pit will be located: on the south end of the location,and the pit walls will be sloped at no greater than 2to 1.

The reserve pit shall be located in cut material, with at least 50% of the pit volume being below original ground level. Three sides of the reserve pit will be fenced before drilling starts. The fourth side will be fenced as soon as drilling is completed, and shall remain until the pit is dry. As soon as the reserve pit has dried, all areas not needed for production will be rehabilitated.

Trash must be contained in a trash cage and hauled away to an approved disposal site as necessary but no later than at the completion of drilling operations.

8. Ancillary Facilities: Garbage Containers and Portable Toilets.

9. Well Site Layout - depict the pit, rig, cut and fill, topsoil, etc. on a plat with a scale of at least 1" = 50'.

All well, whether drilling, producing, suspended, or abandoned, will be identified in accordance with 43 CFR 3162.6.

Access to the well pad will be from: west

The blooie line will be located: on the south end of the location,at least 100 feet from the well head.

To minimize the amount of fugitive dust and spray escaping from the blooie pit, the following blooie line deflection method will be employed: Water Injection.

10. Plans for Restoration of the Surface:

The top 6 inches of topsoil material will be removed from the location and stockpiled separately on: Adjacent land.

Topsoil along the access road will be reserved in place adjacent to the road.

Immediately upon completion of drilling, all equipment that is not necessary for production shall removed.

The reserve pit and that portion of the location not needed for production will be reclaimed.

Before any dirt work to restore the location takes place, the reserve pit must be completely dry.

Reclaimed roads will have the berms and cuts reduced and will be closed to vehicle use.

All disturbed areas will be recontoured to replicate the natural slope.

The stockpiled topsoil will be evenly distributed over the disturbed area.

Prior to reseeding, all disturbed areas, including the access roads, will be scarified and left with a rough surface.

Seed will be broadcast or drilled between Sept and Nov., or at a time specified by the BLM. If broadcast, a harrow or some other implement will be dragged over the seeded area to assure seed coverage.

The following seed mixture will be used:

BLM-recommended mixture.

The abandonment marker will be one of the following, as specified by BLM:

1) at least four feet above ground level,
2) at restored ground level, or

3) below ground level.

In any case the marker shall be inscribed with the following: operator name, lease number, well name and surveyed description (township, range, section and either quarter-quarter or footages).

Additional requirements:

11. Surface and Mineral Ownership: BLM

12. Other Information:

a. Archeological Concerns: None that RGC is aware of.

The operator is responsible for informing all persons in the area who are associated with this project that they will be subject to prosecution for knowingly disturbing historic or archaeological sites, or for collecting artifacts. If historic or archaeological materials are uncovered during construction, the operator is to immediately stop work that might further disturb such materials, and contact the authorized officer (AO). Within five (5) working days, the AO will inform the operator as to:

- whether the materials appear eligible for the National Register of Historic Places;

- the mitigation measures the operator will likely have to undertake before the site can be used (assuming in situ preservation is not necessary); and

- a time frame for the AO to complete an expedited review under 36 CFR 800.11 to confirm, through the State Historic Preservation Officer, that the findings of the AO are correct and that mitigation is appropriate.

If the operator wishes, at any time, to relocate activities to avoid the expense of mitigation and/or the delays associated with this process, the AO will assume responsibility for whatever recordation and stabilization of the exposed materials may be required. Otherwise, the operator will be responsible for mitigation costs. The AO will provide technical and procedural guidelines for the conduct of mitigation. Upon verification from the AO that the required mitigation has been completed, the operator will then be allowed to resume construction.

b. Threatened and Endangered Species Concerns: No

c. Wildlife Seasonal Restrictions (yes/no): See EIS

d. Off Location Geophysical Testing: N/A

e. Drainage crossings that require additional State or Federal approval: N/A

f. Other: N/A

13. Lessee's or Operator's Representative and Certification

Representative:

Name: Don S. Hamilton

Title: Permit Specialist

Address: 1305 South 100 East
Price, Utah 84501

Phone No: (435)637-8876

Certification:

I hereby certify that I, or persons under my direct supervision, have inspected the proposed drill site and access route; that I am familiar with the conditions which currently exists; that the statements make in this APD package are, to the best of my knowledge, true and correct; and that the work associated with the operations proposed herein will be performed by RGC and its contractors and subcontractors in conformity with this APD package and the terms and conditions under which it is approved. I also certify responsibility for the operations conducted on that portion of the leased lands associated with this application, with bond coverage being provided under BLM bond no. S304604. This statement is subject to the provisions of 18 U.S.C. 1001 for the filing of a false statement.

Don S. Hamilton
Signature

Permit Specialist
Title

September 16, 1998
Date

C. REQUIRED APPROVALS, REPORTS AND NOTIFICATIONS

Required verbal notifications are summarized in Table 1, attached.

Building Location- Contact the Resource Area, Natural Resource Protection Specialist at least 24 hours prior to commencing construction of location.

Spud- The spud date will be reported to the Resource Area Office 24 hours prior to spudding. Written notification in the form of a Sundry Notice (Form 3160-5) will be submitted the District Office within 24 hours after spudding, regardless of whether spud was made with a dry hole digger or big rig.

Daily Drilling Reports- Daily drilling reports shall detail the progress and status of the well and shall be submitted to the District Office on a weekly basis.

Monthly Reports of Operations- In accordance with Onshore Oil and Gas Order No. 1, this well shall be reported on Minerals Management Service (MMS) Form 3160, "Monthly Report of Operations," starting the month in which operations commence and continuing each month until the well is physically plugged and abandoned. This report will be filed directly with MMS.

Sundry Notices- There will be no deviation from the proposed drilling and/or workover program without prior approval from the Assistant District Manager. "Sundry Notices and Reports on Wells: (Form 3160-5) will be filed for approval for all changes of plans and other operations in accordance with 43 CFR 3162.3-2. Safe drilling and operating practices must be observed.

Drilling Suspensions- Operations authorized by this permit shall not be suspended for more than 30 days without prior approval of the Authorized Officer. All conditions of this approval shall be applicable during any operations conducted with a replacement rig.

Undesirable Events- Spills, blowouts, fires, leaks, accidents, or any other unusual occurrences shall be immediately reported to the Resource Area in accordance with requirements of NTL-3A.

Cultural Resources- If cultural resources are discovered during construction, work that might disturb the resources is to stop, and the Area Manager is to be notified.

First Production- Should the well be successfully completed for production, the Assistant District Manager, Minerals Division will be notified when the well is placed in producing status. Such notification may be made by phone, but must be followed by a sundry notice or letter not later than five (5) business days following the date on which the well is placed into production.

A first production conference will be scheduled as soon as the productivity of the well is apparent. This conference should be coordinated through the Resource Area Office. The Resource Area Office shall be notified prior to the first sale.

Well Completion Report- Whether the well is completed as a dry hole or as a producer, "Well Completion and Recompletion Report and Log" (Form 3160-4) will be submitted to the District Office not later than thirty (30) days after completion of the well or after completion of operations being performed, in accordance with 43 CFR 3162.4-1. Two copies of all logs, core descriptions, core analysis, well test data, geologic summaries, sample description, and all other surveys or data obtained and compiled during the drilling, workover, and/or completion operations, will be filed with Form 3160-4. Samples (cuttings and/or samples) will be submitted when requested by the Assistant District Manager.

Venting/Flaring of Gas-NTL-4A allows venting/flaring of gas during the initial well evaluation period not to exceed 30 days or 50 MMcf. Venting/flaring beyond the initial test period threshold must be approved by the District Office.

Produced Water- Produced waste water may be confined to an unlined pit for a period not to exceed 90 days after initial production. During the 90 day period, an application for approval of a permanent disposal method and location, along with the required water anlysis, will be submitted to the Assistant District Manager for approval pursuant to NTL-2B.

Off-Lease Measurement, Storage, Commingling- Prior approval must be obtained from the Assistant District Manager for off-lease measurement, off-lease storage and/or commingling (either down-hole or at the surface).

Plugging and Abandonment- If the well is completed as a dry hole, plugging instructions must be obtained from the BLM, Moab District Office prior to initiating plugging operations. Table 1 of this document provides the after-hours phone numbers of personnel who are authorized to give plugging instructions.

A "Subsequent Report of Abandonment" (Form 3160-5) will be filed with the Assistant District Manager, Minerals Divisions within thirty (30) days following completion of the well for abandonment. This report will indicate where plugs were placed and the current status of surface restoration. Upon completion of approved plugging, a regulation marker will be erected in accordance with 43 CFR 3162.6. Final abandonment will not be approved until the surface reclamation work required by the approved APD or approved abandonment notice has been completed to the satisfaction of the Area Manager or his representative, or the appropriate surface managing agency.

TABLE 1
NOTIFICATIONS

Notify Don Stephens of the Price Resource Area, at (435)636-3608 for the following:

2 days prior to commencement of dirt work, construction or reclamation;

1 day prior to spudding;

50 feet prior to reaching surface and intermediate casing depths;

3 hours prior to testing BOPE;

12 hours prior to reaching kickoff point depth (if applicable).

If the person at the above number cannot be reached, notify the Moab District Office at (435) 259-6111. If unsuccessful, notify one of the people listed below.

Well abandonment operations require 24 hour advance notice and prior approval. In the case of newly drilled dry holes, verbal approval can be obtained by calling the Moab District Office, Branch of Fluid Minerals at (435) 259-6111. If approval is needed after work hours, you may contact the following:

Eric Jones, Petroleum Engineer	Office: (435) 259-6111 Home: (435) 259-2214

If unable to reach the above individuals, please call:

Lynn Jackson, Chief, Branch of Fluid Minerals	Office: (435) 259-6111 Home: (435) 259-7990

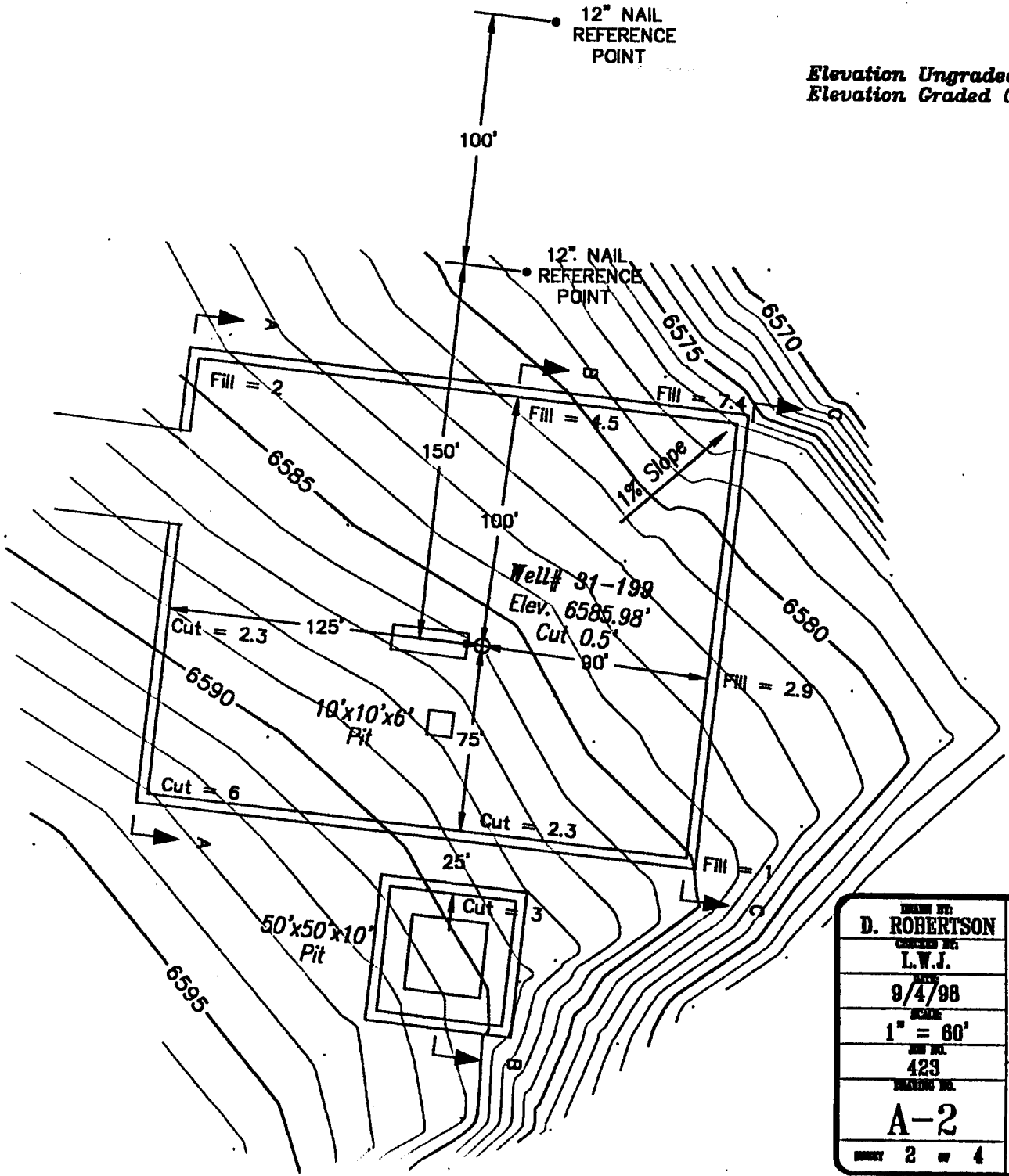

DRAWN BY: D. ROBERTSON	Castle Valley Inc. 3985 South 125 West Price, Utah 84501 (801) 637-9300 FAX (801) 637-2033
CHECKED BY: L.W.J.	
DATE: 9/4/98	
SCALE: 1" = 60'	
JOB NO. 423	
DRAWING NO. A-2	RIVER GAS CORPORATION LOCATION LAYOUT SECTION 31, T14S, R9E S.L.B. & M. WELL # 31-199
SHEET 2 OF 4	

Exhibit "A" 2 of 3

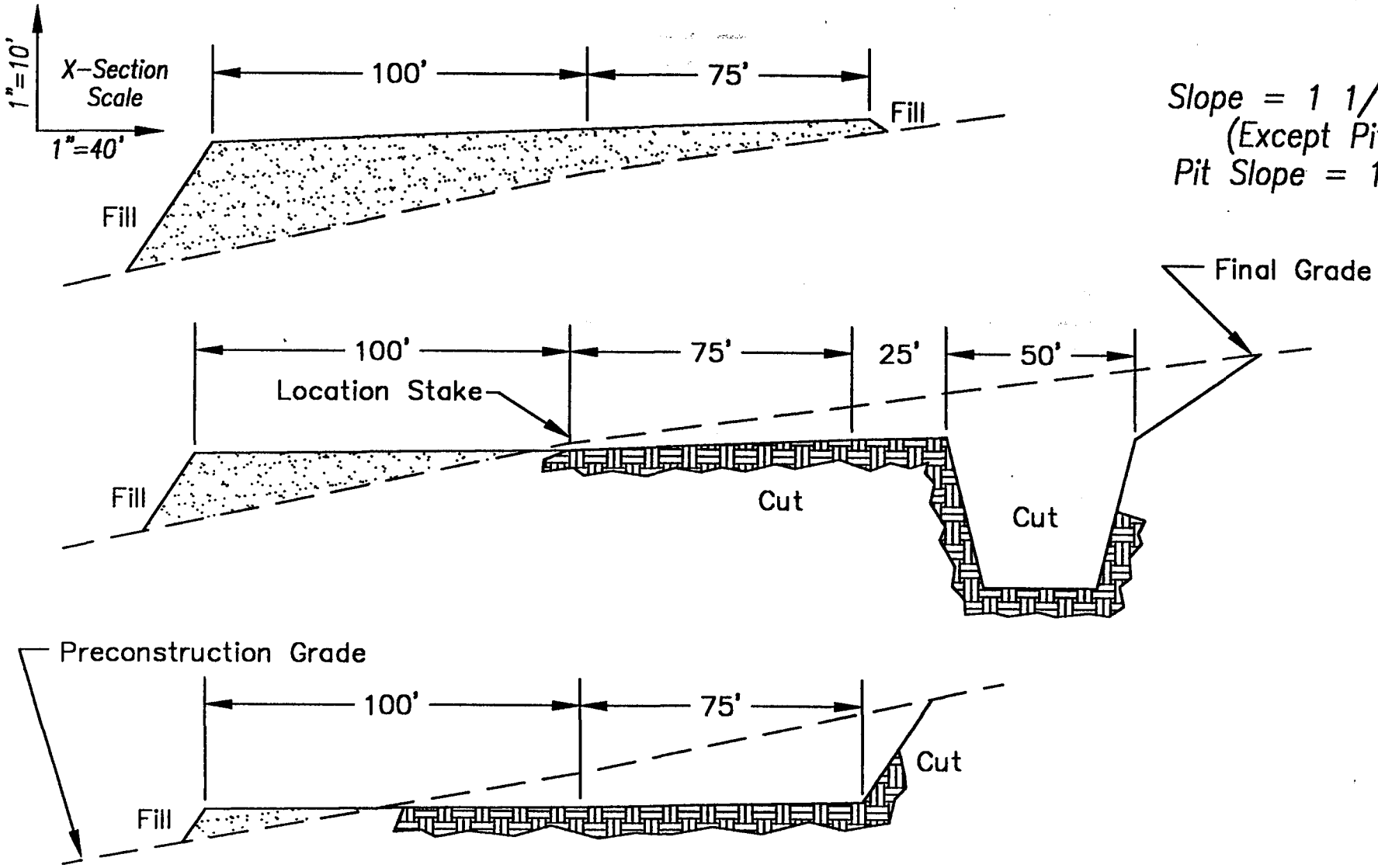

APPROXIMATE YARDAGES

CUT	
(6") Topsoil Stripping	= 750 Cu. Yds.
Remaining Location	= 1,902.2 Cu. Yds.
TOTAL CUT	= 2,652.2 Cu. Yds.
TOTAL FILL	= 2,015.6 Cu. Yds.

DRAWN BY: D. ROBERTSON	Castle Valley Services 3266 South 125 West Price, Utah 84501 (801) 637-9300 FAX (801) 637-2833
CHECKED BY: L.W.J.	
DATE: 9/4/98	
SCALE: 1" = 40'	
JOB NO. 423	
DRAWING NO. C-1	RIVER GAS CORPORATION TYPICAL CROSS SECTIONS SECTION 31, T14S, R9E S.L.B. & M. WELL # 31-199
SHEET 3 OF 4	

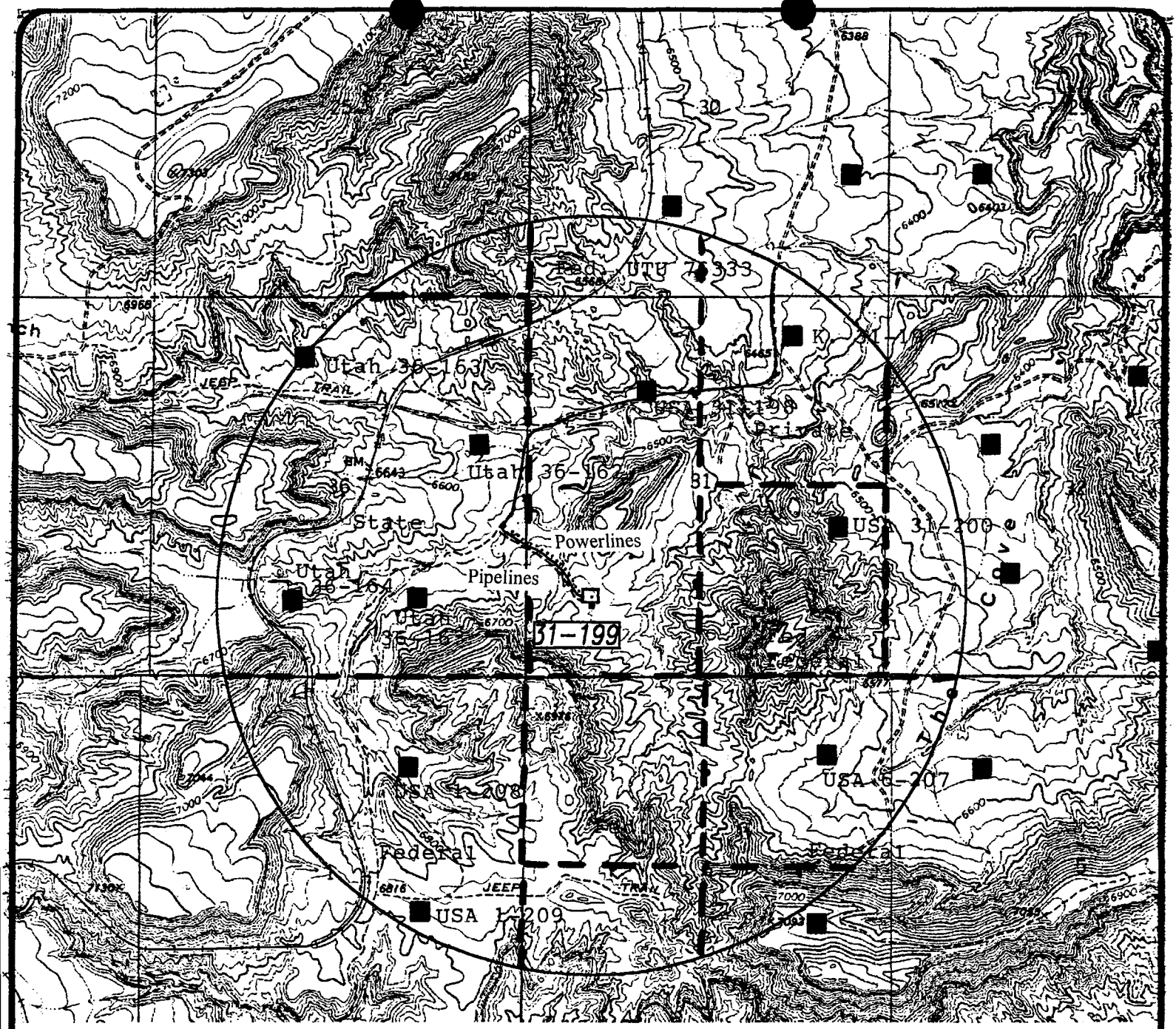

DRAWN BY: D. ROBERTSON	Castle Valley 140 North Cedar Hills Dr. Price, Utah 84501 (801) 637-3567 FAX (801) 637-3568
CHECKED BY: L.W.J.	
DATE: 9/8/98	
SCALE: 1"=2000'	
JOB NO.: 423	Surveyors
DRAWING NO.: L-1	River Gas Corporation Section 31, T14S, R9E, S.L.B.&M. Carbon County, Utah Well# 31-199
SHEET 4 OF 4	

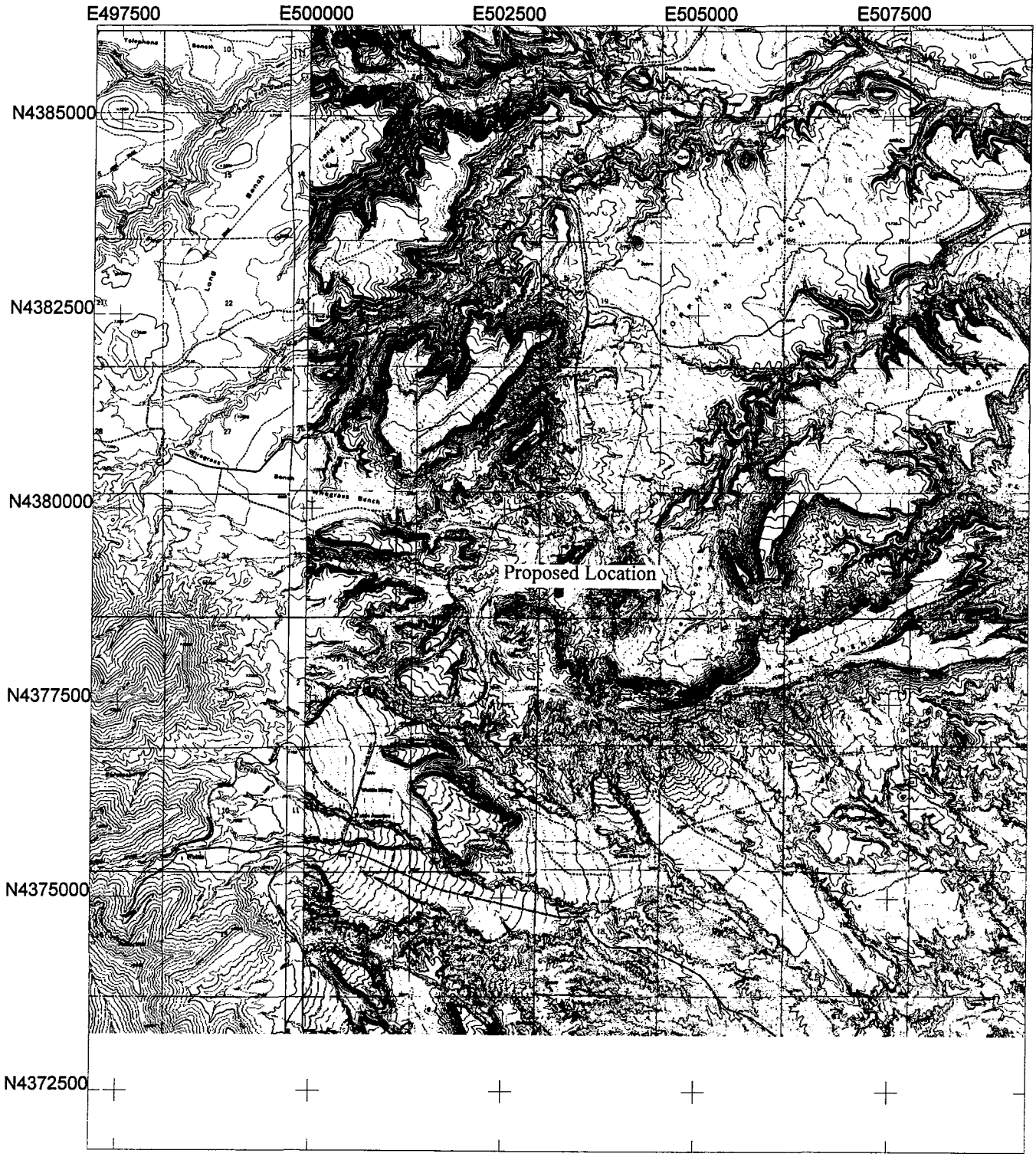

USA 31-199

Universal Transverse Mercator
North 12
NAD83 (Conus)

N

Scale 1:75000
0 8000
Feet

9/11/1998
Pathfinder Office™

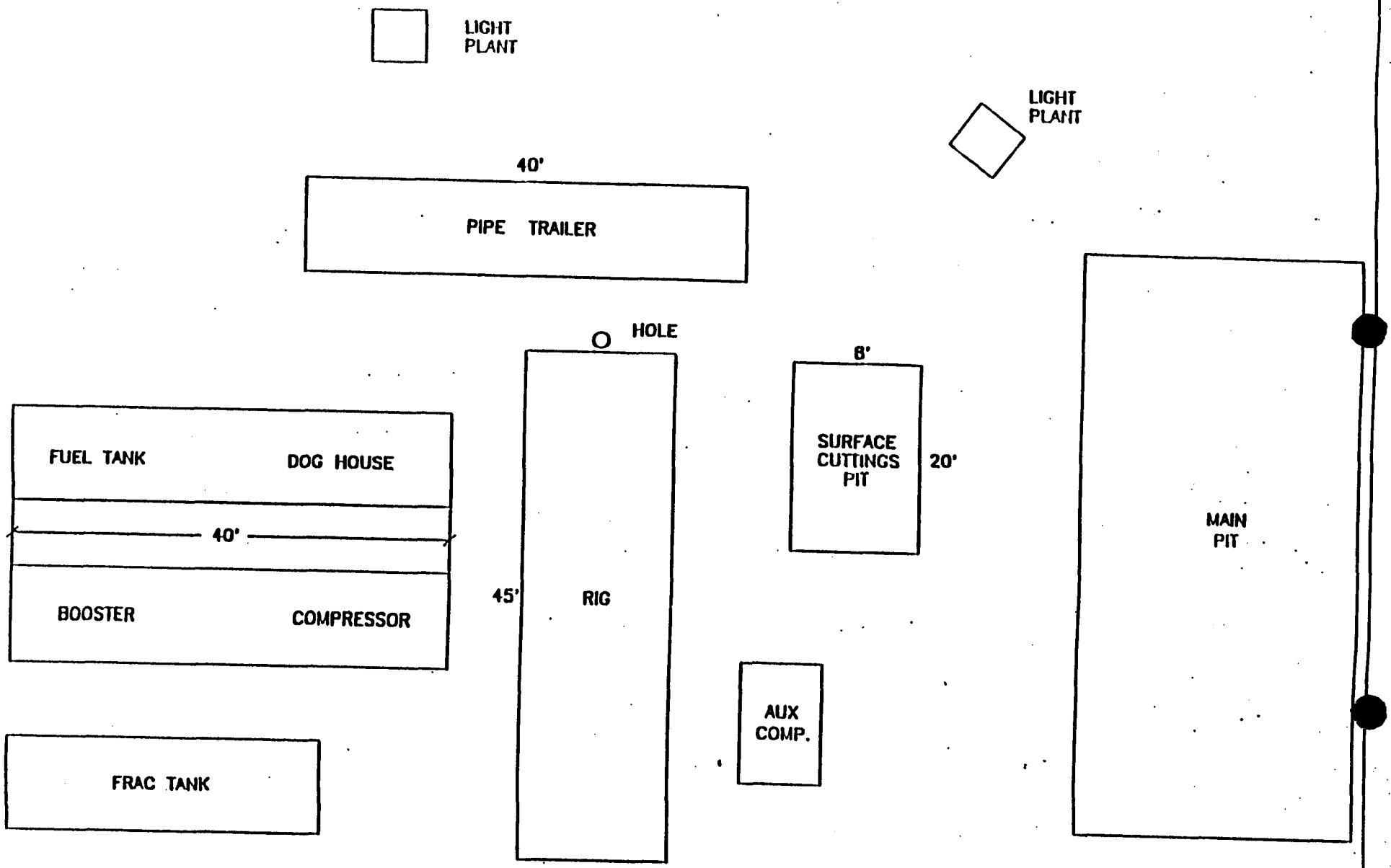

APPROXIMATE LAYOUT OF RIG & EQUIPMENT
(NOT TO SCALE)

Exhibit "C"

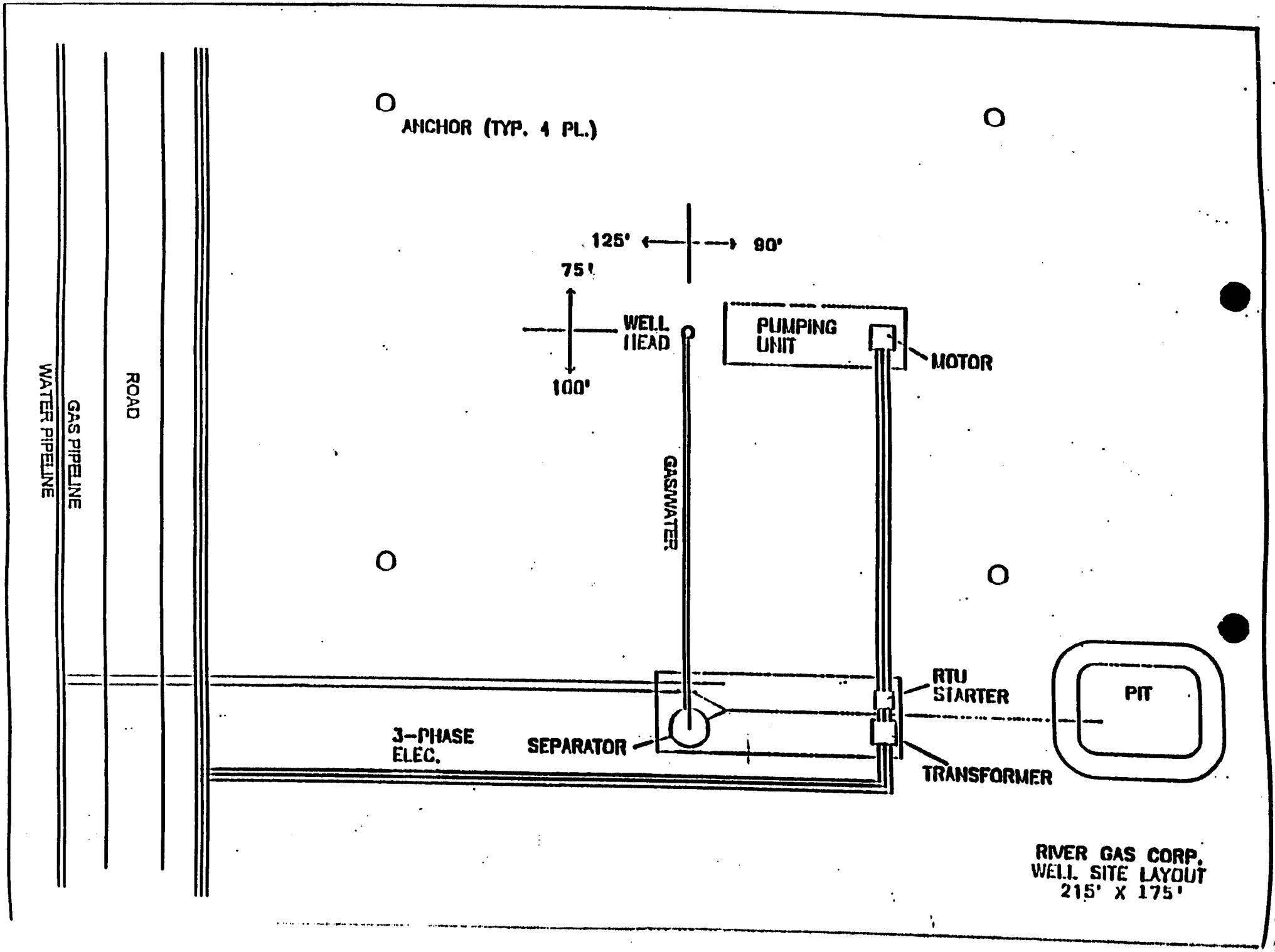
ANCHOR (TYP. 4 PL.)
125'
90'
75'
100'
WELL HEAD
PUMPING UNIT
MOTOR
GAS/WATER
RTU STARTER
PIT
3-PHASE ELEC.
SEPARATOR
TRANSFORMER
ROAD
GAS PIPELINE
WATER PIPELINE
RIVER GAS CORP.
WELL SITE LAYOUT
215' X 175'

RIVER GAS CORPORATION

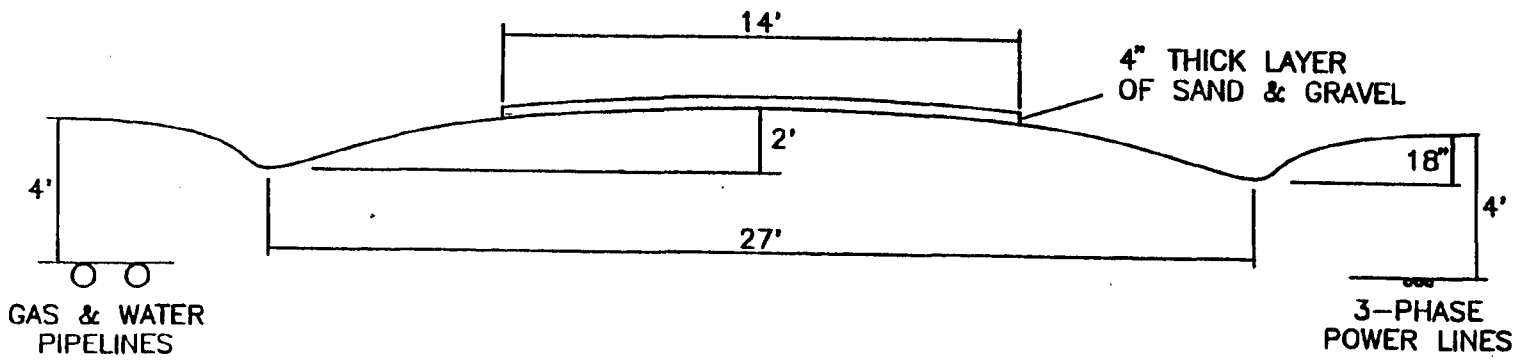

TYPICAL ROAD CROSS-SECTION

NOT TO SCALE

Exhibit "F"

DIVERTER HEAD

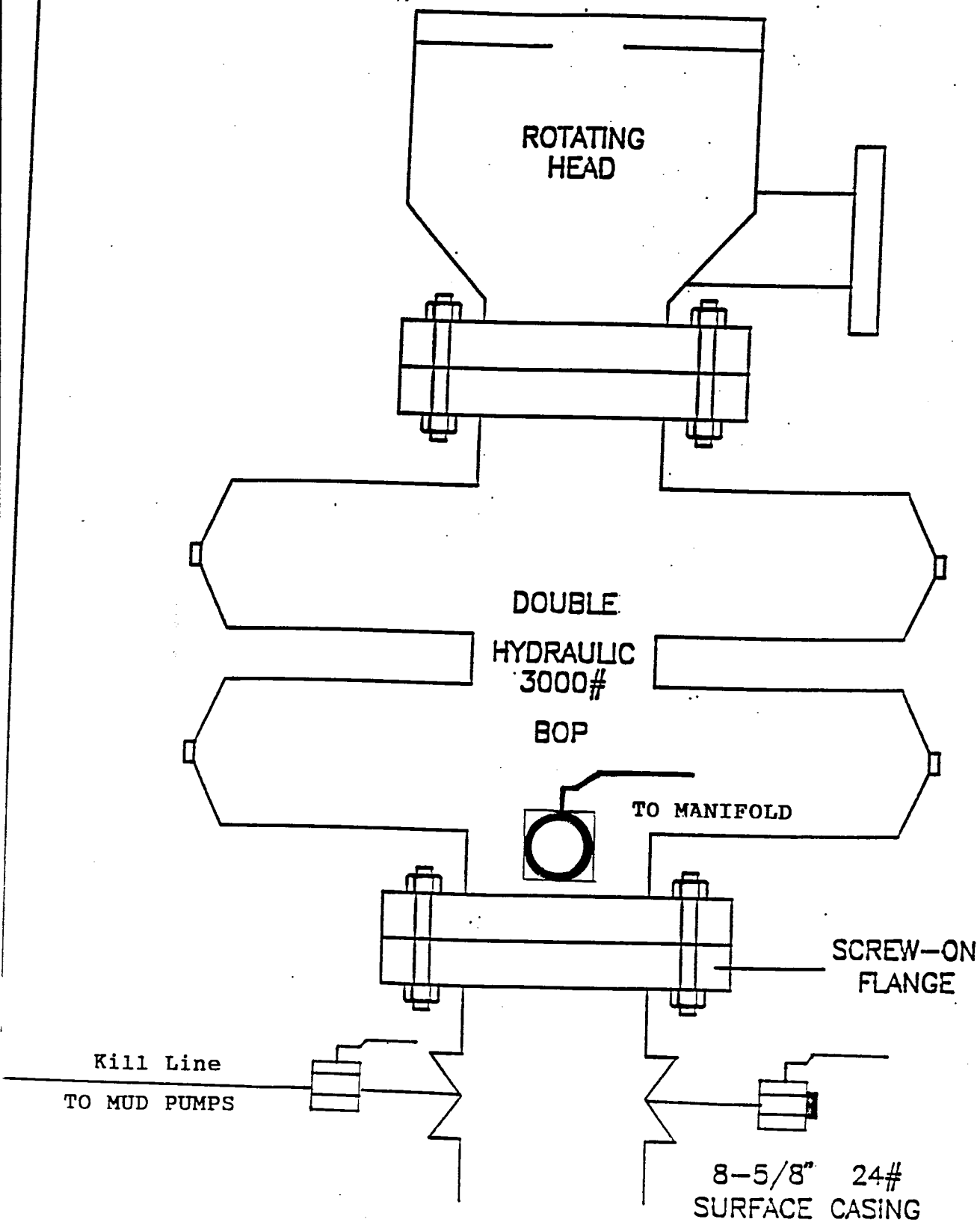

RIVER GAS CORP.

(1) 2" 5M FLANGED CHOKE
(2) 2" 5M GATE VALVE (FLANGED)
(3) 2" 5M STUDDED CROSS
(4) 2" 5M GATE VALVE (FLANGED)
(5) 2" 5M FLANGED CHOKE
(6) 2" 5M GATE VALVE (FLANGED)
(7) 2" LINE
(8) 2" 5M GATE VALVE (FLANGED)
(9) 3000# GAUGE

NOTE:
NUMBER 8 GATE VALVE SITS ON TOP OF MANIFOLD BETWEEN STUDDED CROSS AND 3000# GAUGE.

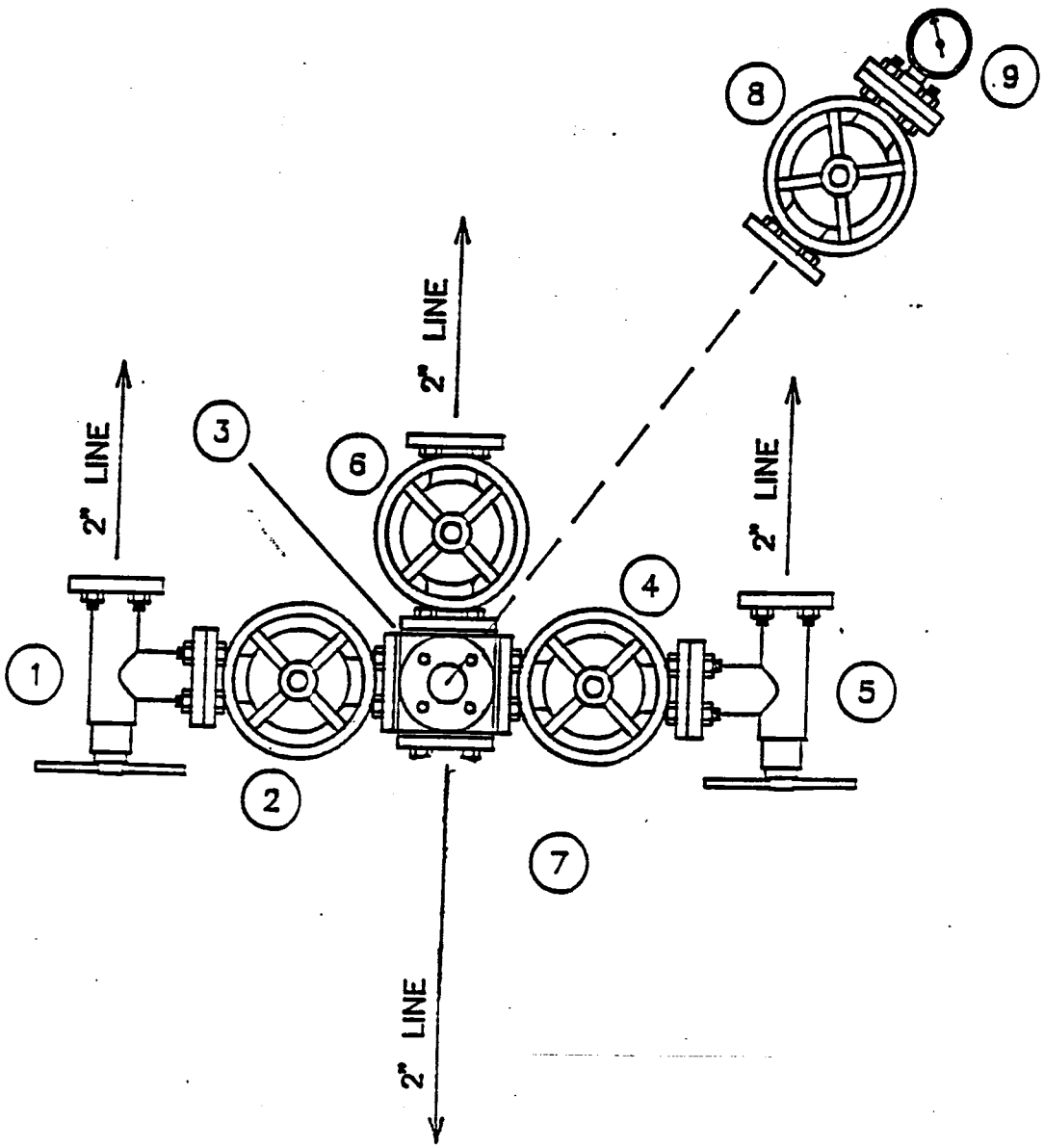

TO BOP

AND A NEW 2" BALL VALVE
FULL OPEN 5000PSI

MANIFOLD

WORKSHEET
APPLICATION FOR PERMIT TO DRILL

APD RECEIVED: 09/18/98

API NO. ASSIGNED: 43-007-30480

AMENDED

WELL NAME: ~~USA~~ Utah 31-199
OPERATOR: RIVER GAS CORPORATION (N1605)
CONTACT: Don Hamilton (435) 637-8876

PROPOSED LOCATION:
SWSW 31 - T14S - R09E
SURFACE: 1125-FSL-0928-FWL
BOTTOM: 1125-FSL-0928-FWL
CARBON COUNTY
DRUNKARDS WASH FIELD (048)

LEASE TYPE: ~~FED~~ State
LEASE NUMBER: ~~UTU-76333~~ ML-48233
SURFACE OWNER: ~~Federal~~ State

PROPOSED FORMATION: FRSD

INSPECT LOCATION BY: / /		
TECH REVIEW	Initials	Date
Engineering	RJK	4-22-99
Geology		
Surface		

RECEIVED AND/OR REVIEWED:

✓ Plat
✓ Bond: Federal [] State [✓] Fee []
(No. ~~S304604~~ 579333)
N Potash (Y/N)
N Oil Shale (Y/N) *190-5(B)
✓ Water Permit
(No. PR-WID / City of Price)
N RDCC Review (Y/N)
(Date:)

N/A St/Fee Surf Agreement (Y/N)

LOCATION AND SITING:

___ R649-2-3. Unit Drunkards Wash
___ R649-3-2. General
✓ R649-3-3. Exception
___ Drilling Unit
Board Cause No: ___
Date: ___

COMMENTS: Need Presite. (Conducted 4-14-99)
Need add'l info. "Except. Loc." (Rec'd 5-7-99)

STIPULATIONS: ~~(1) FEDERAL APPROVAL~~ (1) Engr. See Worksheet.
(2) ~~SITLA~~ STATEMENT OF BASIS
(3) SITLA ATTACHMENTS (WILDLIFE)

* CHANGE LETTER TO REFLECT PREVIOUS PERMIT AS A FEDERAL WELL

DIVISION OF OIL, GAS & MINING

OPERATOR: RIVER GAS CORPORATION (N1605)

FIELD: DRUNKARDS WASH (048)

SEC. 31, TWP 14S, RNG 9E

COUNTY: CARBON UNIT: DRUNKARDS WASH UNIT

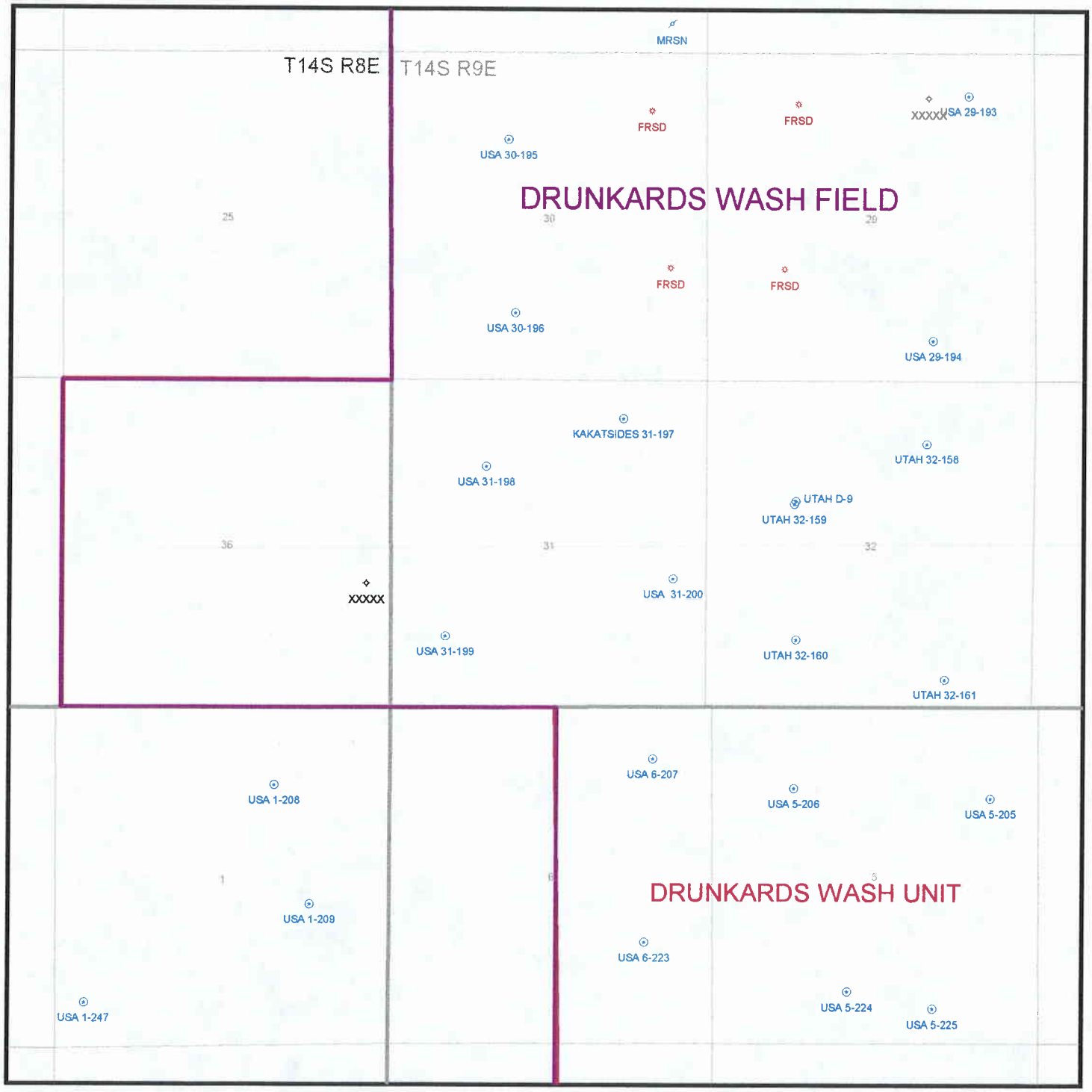

DATE PREPARED:
21-SEP-1998

DIVISION OF OIL, GAS AND MINING
APPLICATION FOR PERMIT TO DRILL
STATEMENT OF BASIS

Operator Name: River Gas Corporation
Name & Number: Utah 31-199
API Number: 43-007-30480

Location: 1/4,1/4 SWSW Sec. 31 T. 14S R. 9E

Geology/Ground Water:
The sandy, silty, pebbled, moderately-permeable soil is developed on the Blue Gate Member of the Mancos Shale. The Garley Canyon Sandstone Beds of the Blue Gate Member of the Mancos Shale are likely to be present at this location. If the Garley Canyon Beds are present (probable) and wet (possible - standing water was found in upper Garley Canyon Beds in Pinnacle Canyon ~1.5 miles northeast), both beds should be included within the surface casing string. The operator is informed of the potential for wet Garley Canyon Beds and will respond to protect the zones by extending the surface casing string as needed. Extending the proposed casing and cement will adequately isolate any shallow zones containing water.

Reviewer: Christopher J. Kierst **Date**: 4/20/99

Surface:
The nearest moving surface waters are at North Spring Creek (1 1/2 miles southwest). Standing water was found in upper Garley Canyon Beds in Pinnacle Canyon ~1.5 miles northeast. Precipitation will be deflected around the location with berms and culverts. There are no nearby culinary or irrigation water supply wells. The site was photographed and characterized on 4/14/99. Provision was made to ensure site rehabilitation, litter and waste control, preservation of drainage patterns and the integrity of local infrastructure, groundwater and other resources. The well utilities and gas gathering system will follow the approach roadway.

Reviewer: Christopher J. Kierst **Date**: 4/20/99

Conditions of Approval/Application for Permit to Drill:
1) Culverts sufficient to manage expected runoff, standing and surface water in crossed drainages.
2) Berm location and pit.
3) Site infrastructure as per drilling location plat.
4) Minimum 12 mil synthetic liner required.
5) Soil storage as per drilling location plat.
6) Extend surface casing as needed to contain any water in the Garley Canyon Beds of Blue Gate Member of the Mancos Shale.

ON-SITE PREDRILL EVALUATION

Division of Oil, Gas and Mining

OPERATOR: River Gas Corporation

WELL NAME & NUMBER: Utah 31-199

API NUMBER: 43-007-30480

LEASE: State FIELD/UNIT: Undesignated

LOCATION: 1/4,1/4 SWSW Sec: 31 TWP: 14S RNG: 9E 1125 FSL 928 FWL

LEGAL WELL SITING: 660'F SEC. LINE; 660'F 1/4,1/4 LINE; 1320'F ANOTHER WELL.

GPS COORD (UTM): X = 503,205.90 Y =4,378,950.21

SURFACE OWNER: SITLA

PARTICIPANTS

C. Kierst(DOGM), D. Hamilton(RGC), G. Vasquez(RGC), L. Jensen (Nelco), D. Jones(DWR), E. Bonner (SITLA).

REGIONAL/LOCAL SETTING & TOPOGRAPHY

Western margin of Colorado Plateau/~2.5 miles east of Wasatch Plateau highlands, surrounded by 1-200' high upper bench erosional remnants and amongst tributaries to a fork of Pinnacle Wash (above Pinnacle Canyon). Location is about 8.5 miles southwest of Price, Utah, 3.5 miles northeast of Wattis on a moderately eroded landscape and ~4000' southeast of the railroad grade.

SURFACE USE PLAN

CURRENT SURFACE USE: Grazing, wildlife habitat

PROPOSED SURFACE DISTURBANCE: 215' X 175' pad with 50' X 50' X 10' attached pit. 1,600' of new approach road is needed.

LOCATION OF EXISTING WELLS WITHIN A 1 MILE RADIUS: 2 RGC CBM locations in APD (approved) status, 2 RGC CBM locations (permit rec'd.), 1 P&A (Haley's Siding 36-4), and 7 RGC CBM producers.

LOCATION OF PRODUCTION FACILITIES AND PIPELINES: none nearby.

SOURCE OF CONSTRUCTION MATERIAL: Gravel location and approach road; soil stored in berm.

ANCILLARY FACILITIES: none

WASTE MANAGEMENT PLAN:

Portable toilets; garbage cans on location will be emptied into centralized dumpsters which will be emptied into an approved landfill.

ENVIRONMENTAL PARAMETERS

AFFECTED FLOODPLAINS AND/OR WETLANDS: ~1.5 miles southwest of standing water in Pinnacle Canyon in the same fork of the Pinnacle Wash drainage. The Price River is ~8 miles northeast.

FLORA/FAUNA: Sparse pinyon and juniper, greasewood, sagebrush, grass,/ birds, lizards, coyotes, rodents, raptors, priority elk and critical deer winter range, reptiles

SOIL TYPE AND CHARACTERISTICS: Sandy,silty, pebbly soil due to float from nearby Quaternary/Tertiary Pediment Mantle-covered erosional remnants and Emery Sandstone Member of the Mancos Shale. (SM?)

SURFACE FORMATION & CHARACTERISTICS: Main Body of the Blue Gate Member (just below the Emery Sandstone Member and above the Garley Canyon Beds of the Blue Gate Member) of Mancos Shale, light gray, bentonitic shale and sandstone ledges.

EROSION/SEDIMENTATION/STABILITY: Stable.

PALEONTOLOGICAL POTENTIAL: None observed

RESERVE PIT

CHARACTERISTICS: Dugout, earthen pit, as above.

LINER REQUIREMENTS (Site Ranking Form attached): Minimum 12 mil synthetic liner

SURFACE RESTORATION/RECLAMATION PLAN

See SITLA agreement.

SURFACE AGREEMENT: On file with state.

CULTURAL RESOURCES/ARCHAEOLOGY: On file with state.

OTHER OBSERVATIONS/COMMENTS

Devil's Slide igneous intrusive dike is about ½ mile east.

ATTACHMENTS:

4 photographs taken.

Chris Kierst
DOGM REPRESENTATIVE

4/14/99/ 2:10 PM
DATE/TIME

ON-SITE PREDRILL EVALUATION

Division of Oil, Gas and Mining

OPERATOR: River Gas Corporation

WELL NAME & NUMBER: Utah 31-199

API NUMBER: 43-007-30480

LEASE: State FIELD/UNIT: Undesignated

LOCATION: 1/4,1/4 SWSW Sec: 31 TWP: 14S RNG: 9E 1125 FSL 928 FWL

LEGAL WELL SITING: 660'F SEC. LINE; 660'F 1/4,1/4 LINE; 1320'F ANOTHER WELL.

GPS COORD (UTM): X = 503,205.90 Y =4,378,950.21

SURFACE OWNER: SITLA

PARTICIPANTS

C. Kierst(DOGM), D. Hamilton(RGC), G. Vasquez(RGC), L. Jensen (Nelco), D. Jones(DWR), E. Bonner (SITLA).

REGIONAL/LOCAL SETTING & TOPOGRAPHY

Western margin of Colorado Plateau/~2.5 miles east of Wasatch Plateau highlands, surrounded by 1-200' high upper bench erosional remnants and amongst tributaries to a fork of Pinnacle Wash (above Pinnacle Canyon). Location is about 8.5 miles southwest of Price, Utah, 3.5 miles northeast of Wattis on a moderately eroded landscape and ~4000' southeast of the railroad grade.

SURFACE USE PLAN

CURRENT SURFACE USE: Grazing, wildlife habitat

PROPOSED SURFACE DISTURBANCE: 215' X 175' pad with 50' X 50' X 10' attached pit. 1,600' of new approach road is needed.

LOCATION OF EXISTING WELLS WITHIN A 1 MILE RADIUS: 2 RGC CBM locations in APD (approved) status, 2 RGC CBM locations (permit rec'd.), 1 P&A (Haley's Siding 36-4), and 7 RGC CBM producers.

LOCATION OF PRODUCTION FACILITIES AND PIPELINES: none nearby.

SOURCE OF CONSTRUCTION MATERIAL: Gravel location and approach road; soil stored in berm.

ANCILLARY FACILITIES: none

Evaluation Ranking Criteria and Ranking Score
For Reserve and Onsite Pit Liner Requirements

Site-Specific Factors	Ranking	Site Ranking
Distance to Groundwater (feet)		
>200	0	
100 to 200	5	
75 to 100	10	
25 to 75	15	
<25 or recharge area	20	0
Distance to Surf. Water (feet)		
>1000	0	
300 to 1000	2	
200 to 300	10	
100 to 200	15	
< 100	20	0
Distance to Nearest Municipal Well (feet)		
>5280	0	
1320 to 5280	5	
500 to 1320	10	
<500	20	0
Distance to Other Wells (feet)		
>1320	0	
300 to 1320	10	
<300	20	0
Native Soil Type		
Low permeability	0	
Mod. permeability	10	
High permeability	20	10
Fluid Type		
Air/mist	0	
Fresh Water	5	
TDS >5000 and <10000	10	
TDS >10000 or Oil Base Mud Fluid containing significant levels of hazardous constituents	15 20	0
Drill Cuttings		
Normal Rock	0	
Salt or detrimental	10	0
Annual Precipitation (inches)		
<10	0	
10 to 20	5	
>20	10	5
Affected Populations		
<10	0	
10 to 30	6	
30 to 50	8	
>50	10	0
Presence of Nearby Utility Conduits		
Not Present	0	
Unknown	10	
Present	15	0

Final Score 15 (Level II Sensitivity)

Well name:	**499 RGC 31-199**
Operator:	**River Gas Corp.**
String type:	Surface
Location:	Carbon County
Project ID:	43-007-30480

Design parameters:

Collapse

Mud weight: 8.330 ppg

Design is based on evacuated pipe.

Burst

Max anticipated surface pressure: -4,294 psi

Internal gradient: 11.221 psi/ft

Calculated BHP 172 psi

No backup mud specified.

Minimum design factors:

Collapse:

Design factor 1.125

Burst:

Design factor 1.00

Tension:

8 Round STC:	1.80 (J)
8 Round LTC:	1.80 (J)
Buttress:	1.60 (J)
Premium:	1.50 (J)
Body yield:	1.50 (B)

Tension is based on buoyed weight.

Neutral point: 348 ft

Environment:

H2S considered?	No
Surface temperature:	75 °F
Bottom hole temperature:	81 °F
Temperature gradient:	1.40 °F/100ft
Minimum section length:	290 ft
Cement top:	31 ft

Non-directional string.

Re subsequent strings:

Next setting depth:	7,500 ft
Next mud weight:	9.000 ppg
Next setting BHP:	3,506 psi
Fracture mud wt:	19.250 ppg
Fracture depth:	7,500 ft
Injection pressure	7,500 psi

Run Seq	Segment Length (ft)	Size (in)	Nominal Weight (lbs/ft)	Grade	End Finish	True Vert Depth (ft)	Measured Depth (ft)	Drift Diameter (in)	Internal Capacity (ft^3)
1	398	8.625	24.00	J-55	ST&C	398	398	7.972	19.2

Run Seq	Collapse Load (psi)	Collapse Strength (psi)	Collapse Design Factor	Burst Load (psi)	Burst Strength (psi)	Burst Design Factor	Tension Load (Kips)	Tension Strength (Kips)	Tension Design Factor
1	172	1370	7.95	172	2950	17.13	8	244	29.19 J

Prepared by: RJK
Utah Dept. of Natural Resources

Date: April 22,1999
Salt Lake City, Utah

ENGINEERING STIPULATIONS: Conductor and surface casing shall be cemented to surface.
Collapse strength is based on the Westcott, Dunlop & Kemler method of biaxial correction for tension.
Collapse is based on a vertical depth of 398 ft, a mud weight of 8.33 ppg The casing is considered to be evacuated for collapse purposes.
Burst strength is not adjusted for tension.

Engineering responsibility for use of this design will be that of the purchaser.

Well name:	**499 RGC 31-199**
Operator:	**River Gas Corp.**
String type:	Production
Location:	Carbon County
Project ID:	43-007-30480

Design parameters:

Collapse

Mud weight: 8.330 ppg

Design is based on evacuated pipe.

Burst

Max anticipated surface pressure: 0 psi

Internal gradient: 0.433 psi/ft

Calculated BHP 1,720 psi

No backup mud specified.

Minimum design factors:

Collapse:

Design factor 1.125

Burst:

Design factor 1.00

Tension:

8 Round STC:	1.80 (J)
8 Round LTC:	1.80 (J)
Buttress:	1.60 (J)
Premium:	1.50 (J)
Body yield:	1.50 (B)

Tension is based on buoyed weight.

Neutral point: 3,473 ft

Environment:

H2S considered?	No
Surface temperature:	75 °F
Bottom hole temperature:	131 °F
Temperature gradient:	1.40 °F/100ft
Minimum section length:	368 ft
Cement top:	1,215 ft

Non-directional string.

Run Seq	Segment Length (ft)	Size (in)	Nominal Weight (lbs/ft)	Grade	End Finish	True Vert Depth (ft)	Measured Depth (ft)	Drift Diameter (in)	Internal Capacity (ft^3)
1	3975	5.5	17.00	N-80	LT&C	3975	3975	4.767	137

Run Seq	Collapse Load (psi)	Collapse Strength (psi)	Collapse Design Factor	Burst Load (psi)	Burst Strength (psi)	Burst Design Factor	Tension Load (Kips)	Tension Strength (Kips)	Tension Design Factor
1	1720	6290	3.66	1720	7740	4.50	59	348	5.89 J

Prepared by: RJK
Utah Dept. of Natural Resources

Date: April 22,1999
Salt Lake City, Utah

ENGINEERING STIPULATIONS: Conductor and surface casing shall be cemented to surface.
Collapse strength is based on the Westcott, Dunlop & Kemler method of biaxial correction for tension.
Collapse is based on a vertical depth of 3975 ft, a mud weight of 8.33 ppg The casing is considered to be evacuated for collapse purposes.
Burst strength is not adjusted for tension.

Engineering responsibility for use of this design will be that of the purchaser.

499 RGC 31-199

Casing Schematic

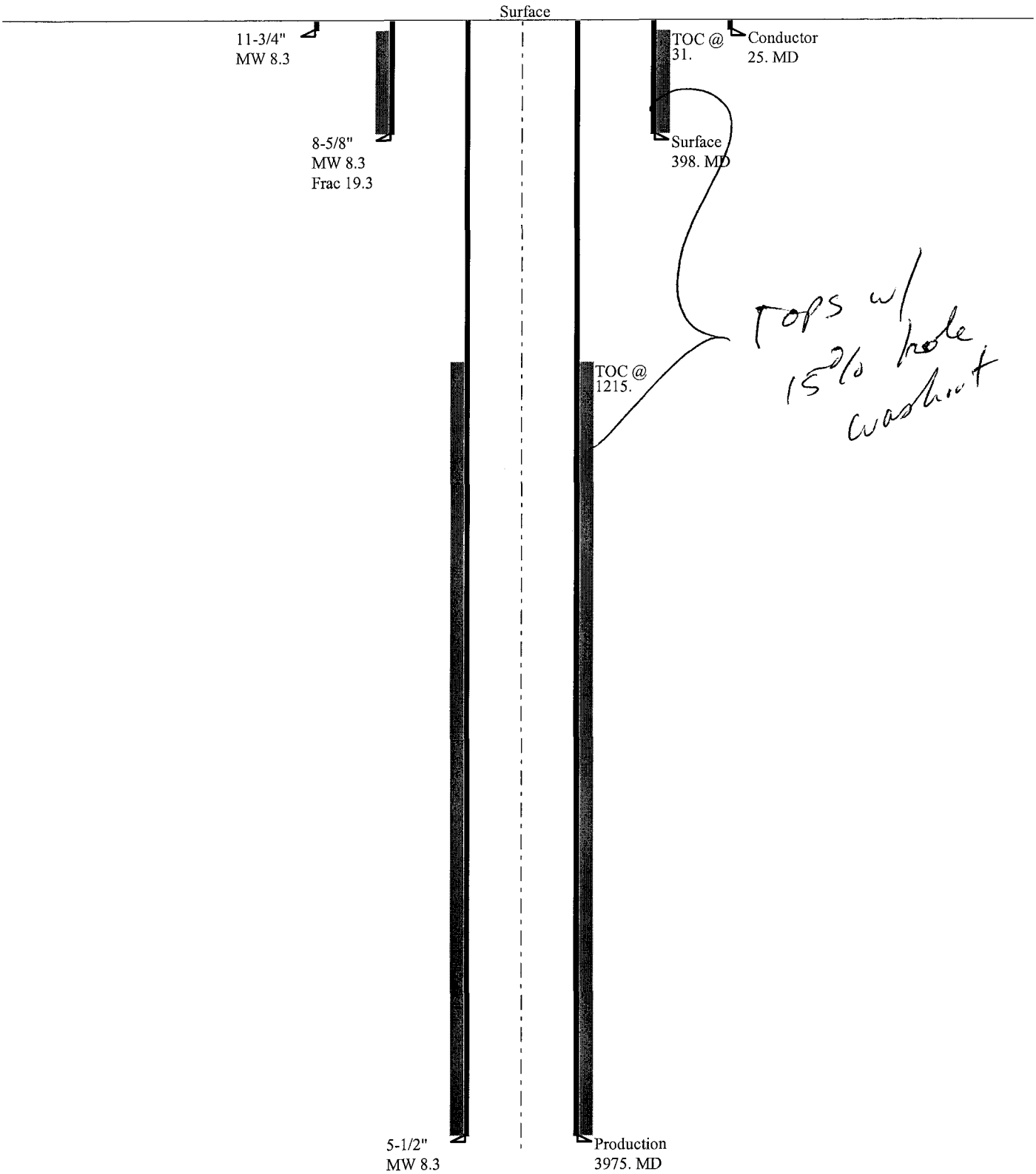

Tops w/ 15% hole washout

SCHOOL AND INSTITUTIONAL TRUST LANDS ADMINISTRATION

OIL AND GAS CONDITIONS OF APPROVAL

PRICE COALBED METHANE PROJECT

FINAL ENVIRONMENTAL IMPACT STATEMENT

Well: UTAH 31-199

Mineral Lease No: ML-48233

API No.: 43-007-30480

Location: SW SW SEC. 31, T. 14 S., R. 9 E.

County: CARBON

The Bureau of Land Management has prepared an Environmental Impact Statement for a portion of the Price Coalbed Methane area and a Record of Decision has been issued with respect to certain actions considered in the Environmental Impact Statement.

Pursuant to the Utah Schools and Land Exchange Act of 1998, Pub. L. 105-335, 112 Stat. 3139, which ratified the May 8, 1998, "Agreement to Exchange Utah School Trust Lands Between the State of Utah and the United States of America" entered into between the State of Utah and the United States of America, the School and Institutional Trust Lands Administration ("SITLA") has agreed to adopt all conditions, mitigation measures and restrictions imposed on lessees by the Record of Decision in the administration of Federal Mineral Leases acquired in Townships 14, 15, 16 South and Ranger 8 and 9 East, SLBM.

Accordingly, SITLA's approval of the Application for Permit to Drill shall be conditioned upon the following:

Location of Facilities and Timing of Construction

Final well locations and transportation corridor alignments shall be selected and designed to avoid or minimize disturbances to sensitive areas, including areas of high wildlife value or critical habitat, grazing, and/or recreational value, including wetlands and riparian areas; and areas with high erosion potential, highly saline soils, rugged topography, and/or poor reclamation potential (i.e., steep slopes, eroded lands, floodplains, unstable soils), where possible.

New roads shall be constructed so as to avoid areas with high erosion potential. Where roads must be allowed, new roads shall be graded tp spread drainage instead of channeling runoff. No road on excess of 15 percent shall be allowed on slopes greater than 15 percent. No vehicle access shall be allowed across slopes on excess of 25 percent.

Construction shall not occur on frozen or saturated soils, or when watershed damage is likely, unless an adequate plan is submitted to SITLA that demonstrates potential impacts will be mitigated. SITLA may limit cross- country travel or construction activity at times when soils are dry or frozen or have snow cover. SITLA will determine what is "wet," "muddy," or "frozen' based on weather and field conditions at the time. The limitation does not apply to maintenance and operation of producing wells.

Occupancy or other surface disturbance shall not be allowed within 330 feet of the centerline or within the 100-year recurrence interval floodplain of perennial steams, except where authorized in writing by the SITLA (e.g., road crossings).

Occupancy or other surface disturbance shall not be allowed within 660 feet of springs, whether flowing or not. No vibroseis, drilling or blasting associated with seismic exploration shall be allowed withing 0.25 mile of any spring or water well.

During project construction, surface disturbance and vehicle travel shall be limited to the approved location and access routes. Any additional area needed must be approved by SITLA prior to use.

Vegetation removal necessitated by a construction project shall be confined to the limits of actual construction. Removed vegetation will be stockpiled for use in reclamation or removed form the construction site at the direction of SITLA.

Reclamation

The reclamation plan shall be a part of the surface use plan of operations. The following are generally components of the reclamation plan.

All pits must be reclaimed to a natural condition similar to the rest of the reclaimed area, and must be restored to a safe and stable condition.

Reclamation shall start immediately upon completion of construction, unless prevented by weather conditions. Disturbed areas shall be restored to approximately the original contour.

Disturbed areas shall be revegetated after the site has been satisfactorily prepared. Site preparation may include ripping, contour furrowing, terracing, reduction of steep cut and fill slopes, waterbarring, or other procedures.

Revegetation seed mixes have been established for the Project Area, and are provided in Appendix 2F. They are based on erosion control, forage production, elevation, soils, vegetation community composition, and precipitation requirements. Different seed mixes have been developed for temporary seedlings, and for final reclamation of sited in salt desert, sagebrush/grass, pinyon-juniper, mountain brush, and riparian habitats. Reclamation in riparian habitat shall also involve sedge and rush root plugs, willow cuttings, and cottonwood bare root stock plants. All seed mixes shall be free of noxious weeds.

Seedling shall be done by drilling on the contour whenever practical, or by other approved method. Where broadcast seeding is used, seeding shall take place after the soil surface is recontoured and scarified. A harrow or similar implement shall be dragged over the area to assure seed cover.

On all cut slopes, the seeding must extend from the bottom of the ditch to the top of the cut slope. On embankment slopes, the seeding must extend from the roadway shoulder to the toe of the slope. Seeding shall also be done on all borrow pit areas and on all sidecast slopes in areas of full bench construction.

Seeding and/or planting shall be repeated until satisfactory revegetation is accomplished, as determined by SITLA. Mulching, fertilizing, fencing or other practices may be required.

Seeding shall be done from October 1 to November 15, and from February 1 to March 31 (requires SITLA prior approval).

Sufficient topsoil to facilitate revegetation shall be segregated from subsoils during all construction operations and shall be returned to the surface upon completion of operations, where feasible. Topsoil stockpiles shall be revegetated or otherwise protected to prevent erosion and maintain some soil microflora and microfauna. Stockpiled topsoil shall be spread evenly over the recontoured area. All disturbed areas and vehicle tracks form overland access shall be ripped 4 to 12 inches deep within the contour.

Bonds are required for oil and gas operations on federal leases for protection pf the environment, including surface reclamation. Revegatation must be successfully established for release for the bond.

Reclamation and abandonment of pipelines and flowlines may require replacing fill on the original cuts, reducing and grading cut and fill slopes to conform to the adjacent terrain, replacement of surface soil material, waterbarring, and revegetating in accordance in accordance with a reclamation plan.

Wellsite reclamation shall include recounturing to re-establish natural contours where desirable and practical.

After well plugging and abandonment, roads constructed by the operator not required for SITLA transportation system use shall be closed and obliterated. Reclamation may include ripping, scarifying, waterbarring, and barricading Stockpiled soil, debris and fill materials shall be replaced on the road bed to conform to the approved reclamation plan.

Water bars shall be constructed on road grades or slopes, if require by SITLA. Spacing of waterbreaks is dependent on slope and soil type. For most soil types, the following spacing shall be used:

Slope	Spacing
2%	200 feet
2-4%	100 feet
4-5%	75 feet
>5%	50 feet

Revegetation on big game critical winter range shall include hand-planting of seedling browse plants and use of seedling protectors to provide protection against browsing in the first two years after planting.

Temporary erosion control measures such as mulch, jute netting, or other appropriate methods shall be used on unstable soils, steep slopes, and wetland areas to prevent erosion and sedimentation until vegetation becomes established.

General Requirements

Precautions must be taken at all times to prevent wildfire. Operators shall be held responsible for suppression costs for any fires on public lands caused by operator's negligence. No burning of debris shall be allowed without specific authorization from SITLA.

Any campfires must be kept to a minimum size and utilize only downed dead wood.

Road construction must meet class II standards (Appendix 2C).

With SITLA approval, existing roads or trails may be improved (bladed) if impassable by vehicles or equipment. No widening or realignment shall be allowed unless approved by SITLA. Maintenance of roads outside lease or unit boundaries will require a SITLA right-of-way.

New trails may be constructed only when vehicle and equipment passage is impossible, and only with the concurrence of the SITLA. Any pushed trees are to be readily retrievable without additional disturbance, if needed for reclamation.

Reserve pits for oil and gas drilling operations may be required to be lined with commercial-grade bentonite or plastic liners sufficient to prevent seepage. At least half of the

capacity shall be in a cut.

Prior to the use of insecticides, herbicides, fungicides, rodenticides, and other similar substances, and operator must obtain from SITLA approval of a written plan. The plan must describe the type and quantity of material to be used, the pest to be controlled, the method of application, the location for storage and disposal of containers, and other information that SITLA may require. A pesticide may be used only in accordance with it's registered uses and within other agency limitations. Pesticides must not be permanently stored on public lands.

Water Resources

Existing fords shall be used for drainage crossings where possible. Low-water crossings shall use a cut-and-fill process or upgrade existing crossings unless use of culverts is specifically authorized.

Bridges and culverts shall allow adequate fish passage where applicable. Take-down (or free-floating) panels or water gates shall be installed on all fences that cross intermittent or perennial steam channels.

For construction projects lasting more than 30 days, portable chemical toilets shall be provided at all staging areas, bases of operations, and storage areas.

Soaps, detergents, or other nondegradable foreign substances shall not be used for washing in streams or rivers. Biodegradable soap may be used.

No oil, lubricants, or toxic substances may be drained onto the ground surface. Pads shall be designed so that any oil, lubricants, etc., shall drain into a collection system.

Wetlands and Riparian Areas

Construction, development, and right-of-way in riparian areas shall be minimized. Where these areas must be disturbed, stipulations shall minimize impacts and require post-disturbance reclamation. Reclamation shall be closely monitored, and not considered complete until the desired vegetation is established.

Wildlife

Restrictions on Construction Phase Activity: Prohibit construction phase activity described below, on big game high value and critical winter range during the period (December 1 - April 15). This condition would not apply to normal maintenance and operation of producing wells, described below.

Construction Phase Activity: Construction phase activity is considered to include all work associated with initial drilling and construction of facilities through completion, including installation of pumping equipment, connection with ancillary facilities and tie-in with pipelines necessary for product delivery.

Construction activities are not allowed to be initiated unless it is reasonable to believe that such work can be finished to a logical stopping point prior to December 1 of that year. Specific activities considered to be covered by the seasonal closure include all heavy equipment operations including but not limited to the following:

- Mobilization/Demobilization or operation of heavy equipment (crawler tractor, front end loader, backhoe, road grader, etc.)
- Construction activity (road construction or upgrading, pad, pipeline, powerline, ancillary facilities, etc.),
- Drilling activity (operator would not propose to initiate drilling activity if the project could not reasonably be expected to be finished to a logical stopping point by the December 1 date of theat year.
- Seismic operation, detonation of explosives.

This seasonal closure would not apply to reconnaissance, survey/design and /or flagging of project work or other similar activity not requiring actions listed for heavy equipment operation.

Production Phase: A coalbed methane well is considered to be in production phase when the well and ancillary facilities are completed to the point that they are capable of production and delivering product for sale. It is noted that heavy equipment operation may be necessary in the performance of maintenance and operation of producing wells.

Restriction on Non Emergency Workover Operations: Non-emergency workover operations (defined below) are required to be scheduled on big game high value winter range outside the December 1 to April 15 date of the seasonal closure. The operator will be required to submit Sundry notices to SITLA in advance of workover operations proposed between December 1 and April 15. Sundry notices submitted as emergency work, may require independent corroboration by SITLA staff prior to work proceeding. Should SITLA object to the emergency designation of the sundry notice, SITLA would make notification of the objection within five working days of receipt of the sundry notice. In the absence of such notification or in the event of corroboration with the sundry notice, the operator would be permitted to proceed with the workover operation.

Non-emergency Workover Operations: Workover operations to correct or reverse a gradual loss of production over time (loss of production of five percent or less over a 60 day period) is considered to be routine or non-emergency workover operations and would not be permitted during the December 1 to April 15 time frame.

Emergency Workover Operations: Emergency work over operations are defined as downhole equipment failure problems or workover operations necessary to avoid shut-in of the

well or to avoid an immediate safety or environmental problem. Loss of production greater than five percent within a 60 day period is indicative of pump failure and will be treated as an emergency workover operation.

The subject permit application is proposed within critical winter range and subject to acre for acre mitigation for surface disturbance on critical winter range. The following condition comes from a cooperative agreement between the River Gas Corporation, BLM-Price Field Office, the Utah Division of Wildlife Resources and the National Fish and Wildlife Foundation, under which the River Gas Corporation agrees to the following:

- Contribute $1,250.00 (1996 dollars) for each well interest permitted and drilled by RGC (or on behalf of RGC by its contractor) on big game critical winter range as depicted in the FEIS Price Coalbed Methane Project Area. (Wells meeting the above criteria for which payment will be required, will be referred to as "subject wells".) This contribution will be adjusted annually for inflation based on the Consumer Price Index (CPI), see Section II.C.6 for the referenced source used for the determination of the CPI and the date in which this annual adjustment will go into effect.

  Since this mitigation program is designed to address impacts of all big game critical winter range surface disturbance (roads, well pads, pipelines, etc.), contributions will be required regardless of the success or failure of the subject well to produce.

  - The recorded date for spudding for each subject well (the first boring of a hole during the drilling of a well) will serve as the reference date triggering the requirement for the mitigation contribution.

  - Contributions will be submitted (in the form of an Corporate check, cashiers check or wire transfer) directly to the National Fish and Wildlife Foundation by the 30th of each month for all subject wells spudded in the preceding month.

  - All contributions will be made payable to the "National Fish and Wildlife Foundation re: Proj 97-260" and reference the "Price Field Office Wildlife Habitat Impact Mitigation Fund (RGC)".

Exploration, drilling or other development activity shall only be allowed from June 16 to March 31 in sage grouse strutting/nesting areas. This limitation does not apply to maintenance and operation of producing wells.

Permanent surface disturbance and occupancy (i.e., oil and gas production facilities) is prohibited within 0.5 miles of raptor nests which have been documented as occupied within a 3-year period, and temporary surface disturbance and occupancy (i.e., seismic lines, oil and gas

exploration, road construction) is prohibited within one-half mile buffer zones during the critical nesting period. Site-specific evaluations in coordination with the USFWS may allow for modifications to this requirement. This requirement does not apply to maintenance and operation of existing producing wells and access roads constructed prior to occupancy of nest(s). The proponent shall be required to submit (at least 5 days in advance of proposed work) a sundry notice for all workover or maintenance operations requiring use of heavy equipment during the raptor breeding season (February 1 to July 15) and within the 0.5 mile buffer zone of any known raptor nest site. Upon receipt of this notification, SITLA, in consultation with USFWS and UDWR, shall conduct a field evaluation and issue a determination on the activity status of the affected nest site. If the nest site is found to be occupied (defined below), site specific protection measures shall be developed to protect the nesting raptors and prevent conditions or actions that may result or contribute to a "taking" as defined under the Bald Eagle Protection Act and Migratory Bird Treaty Act.

An occupied raptor nest is defined for the purpose of this stipulation as any nest site exhibiting physical evidence of current use by raptors. Evidence may include but is to not limited to: presence of raptors (adults, eggs young) at the nest or within the nesting territory, presence or greenery in the nest, and/or presence of current year's whitewash at the nest or in the immediate vicinity of the nest.

Raptor surveys shall be required to determine the status of known nests and verify presence of additional nests for all federal leases within the Project Area. Surveys shall be conducted by consultants qualified to conduct such surveys and approved by the authorized officer. All surveys shall be conducted by helicopter during May of each year, prior to the proposed drilling and prior to APD approval. The surveys shall be done in the same year as the proposed drilling so that current nest activity status data are available. Costs for surveys and preparation of a report of the findings of the survey shall be the obligation of the lease holder.

In order to protect bald eagle winter roost sites, a 0.5 mile radius buffer zone of no surface occupancy shall be established around all winter night roost sites. This buffer zone applies to all above ground facilities such as wells, compressor stations, and roads, that require or encourage human visitation during the winter period. Exceptions to this stipulation shall be considered on a case by case basis through consultation with the USFWS. Upon request for an exception to this stipulation, SITLA shall coordinate with the USFWS and UDWR to jointly develop a site-specific buffer zone based on topography and visual sight distances around the night roost site.

Cultural Resources

All areas subject to surface disturbance, or Areas of Potential Effect (APE), which have not been previously inventoried for cultural resources to SITLA standards, must be inventoried prior to approval of an APD or other actions. The APE is defined as any area that may be subject to direct or indirect impacts to cultural resources by elements of the development project. The zone of the APE shall vary in size in accordance with the projected levels of sensitivity for cultural resources at the location of any development. In low sensitivity areas, the APE shall be defined as

the area subject to direct impacts through surface disturbing activities. In areas of medium sensitivity, the APE shall be expanded to account for potential indirect impacts: intensive inventory shall occur on all well pads plus additional 10 acres surrounding each pad; a 150- foot corridor center on roads, flowlines, and other facilities shall be inventoried as the APE. In high sensitivity areas, the APE shall include the well pad and 10 acres surrounding the well location' and the APE for roads, flowlines, and other facilities shall be area of direct ground disturbance and a 300-foot zone on all sides of the facility.

Cultural resource inventories shall be conducted in consultation with SITLA by authorized cultural resource professionals. Prior to field work, a records check must be conducted to identify previous inventories ans recorded properties. During the course of inventories, previously unrecorded sites must be recorded on standard forms, photographed, and mapped. Cultural resources shall be evaluated , and a recommendation on eligibility to the National Register of Historic Places shall be made. SITLA shall make all Determinations of Eligibility. A report shall be prepared for each development or series of developments documenting the inventory methods, results, description of the sites within the APE, recommendations on National Register eligibility, and shall include proposed mitigating measures.

SITLA shall consult with the State Historic Preservation Officer (SHPO) and the President 's Advisory Council on Historic Preservation (ACHP) as mandated by the National Historic Preservation Act of 1966 (as amended), in accordance with guidelines set forth in a Programmatic Agreement among BLM, SHPO, ACHP, and RGC. This document has been completed as a legally binding agreement and is referenced in the Record of Decision for the overall project. Site avoidance, detailed site recordation, and site protection shall be the preferred treatments, but mitigation of National register eligible properties through date recovery may take place where avoidance is not prudent or feasible, after consultation as specified in the Programmatic Agreement. SITLA shall submit a treatment plan to SHPO, ACHP and to other affected parties as may be appropriate for a 30-day consultation prior to implementation of data recovery efforts.

SITLA shall notify, consult , and/ or coordinate with Indian tribes, traditional leaders, and other interested parties as required by various statues (NEPA, American Indian Religious Freedom Act [AIRFA], National Historic Preservation Act [NHPA], Federal Land Policy and Management Act [FLPMA], Archaeological Resources Protection Act [ARPA], and the Native American Graves Protection act [NAGPRA]). In particular, SITLA shall attempt to elicit information concerning the potential effects of any action resulting from the Proposed Action on tradition cultural properties, including areas of traditional use and areas of religious or cultural importance to tribes. Indian tribes shall be afforded a minimum of 30 days for review , comments and consultation prior to issuance of a decision; under certain circumstances additional time must be afforded. A 30- day notification period is required by ARPA prior to issuance of any Cultural Resource Use Permits of r the excavation and removal; of cultural resources from public lands administered by SITLA. NAGPRA requires notification and consultation with affected tribes regarding the potential to encounter human remains during the course of a project, and provides for cessation of work, and the notification and consultation with tribes should inadvertent

discovery of human remains occur during the course of a project. SITLA shall assure adherence to these statues.

If a previously unknown property is encountered during construction or operation of the facilities, or is a previously planned undertaking shall affect a known historic property in an unanticipated manner, all work that might adversely affect the property shall cease until SITLA can evaluate the significance of the property and assess the effect of the undertaking. SITLA shall consult with SHPO on both a determination of eligibility and the assessment of effect on an expeditious manner. If the site is determined eligible and shall be affected by the undertaking, SITLA shall ensure that RGC prepares an avoidance or treatment plan for the property.

If humans remains are discovered at any point during the project, they shall be treated according to state and federal law, and according to the wishes of concerned Native American tribes, pursuant to the Native American Graves Protection and Repatriation Act. The county sheriff, coroner, land-managing official, and State Archaeologist shall be notified. The remains shall not be disturbed until the appropriate officials have examined them

Land Use

On split estate lands, where the surface is privately owned and the subsurface is owned by SITLA, SITLA will recommend the same environmental protection standards as shall be used for SITLA surface. The operator is responsible for making a good faith effort ro reach an agreement with the privates surface owner which considers the recommended SITLA protection measures and formalizes requirements for the protection of surface resources and/or damages.

Each application for permit to drill or application to conduct other surface disturbing activities shall contain the name, address and telephone number of the surface owner. The SITLA shall invite the surface owner to participate in any on-site inspection that is held. The operator is responsible for making access arrangements with the private surface owner prior to entry.

Incorporated cities are categorized by BLM as no Lease. Within the Project Area, BLM leases do not permit surface occupancy or other activity for Carbon County Airport, Carbon County Recreation Complex, and Carbon County sanitary landfill.

Livestock Management

Existing range and livestock management facilities, such as fences wells, reservoirs, watering pipelines, troughs and trailing systems, shall not be disturbed without prior approval of SITLA. Where disturbance is necessary, the facility shall be returned to its original condition.

Newly constructed range improvements such as fences and reservoirs must meet SITLA

standards. When it is necessary to gain access across a fenceline for construction purposes, the fence must be braced. Four-inch timber or equivalent must be installed and the gateway kept closed when not in actual use.

All gates found closed during the course of the operation must be reclosed after each passage of equipment and personnel. Cattle guards shall be installed in fences on all collector roads. Either a cattle guard or a gate shall be required on local and resource to roads to control livestock movement or vehicular access.

If road construction cuts through natural topography that serves as a livestock barrier, a fence shell be constructed to replace it. The fence shall be installed with a cattle guard or gate to control livestock and vehicle movement or access.

Access to grazing areas shall be maintained at all times. Livestock operators shall have access to grazing and trailing areas where road closures are implemented during periods of authorized livestock use.

Visual Resources

Roads through timbered areas shall take a curvilinear path to reduce sight distances.

Upon completion of the project the area and access roads shall be reclaimed to as near the original condition as possible. All disturbed areas shall be recontoured to blend as nearly as possible with te natural topography. All berms shall be removed and all cuts (including roads) filled.

Construction areas and access roads shall be kept liter-free. The operator must provide a trash pit or trash cage, and trash must be collected and contained during the operation. All garbage, trash, flagging, lath, etc., shall be removed from the area and hauled to an authorized dump site.

Construction and facilities shall be in conformance with Visual Resource Management (VRM) objectives for the VRM classes in the Project Area. All surface facilities in the Project Area shall be located to minimize disturbance of the visual horizon and painted to blend in with the surrounding landscape.

Colors shall be specified by the SITLA.

MISC. ITEMS

MUD PIT:_____Lined _____Unlined _____Determine at construction

Comments:_____

_____

_____

_____

_____

_____

_____

APPENDIX 2F

SEED MIXTURES FOR THE PRICE COALBED METHANE PROJECT

Seed mixtures have been developed for general land types throughout the project area. They are based on erosion control, forage production, elevation, soils, vegetation communities and average annual precipitation zones. The mixtures show the plant species and the pounds per acre of pure live seed (PLS) to be planted.

The following seed mixture will be planted along service road borrow ditches, around the edge of drill pads with a production well, and surrounding other production and maintenance facilities. The purpose of this seeding is to provide a "green strip" buffer to minimize fire hazards and prevent invasion and establishment of noxious weeds in areas that will receive contained disturbance for the life of these project areas.

Green Strip Area

NOTES: _____

Common Plant Name	**Scientific Name**	Pounds per acre/PLS*
Forage kochia	Kochia prostra	2
Wyoming big sagebrush	Artemisia tridentata wyominggensis Var. Gordon Creek	1
Douglas low rabbitbrush	Chiysothamnus viscidiflorus	1
Yellow sweetclover	Melilotus officinalis	1
Small burnet	Sanguisorba minor	1
Bottlebrush squirreltail	Elymus elymoides	1
Inertmediate wheatgrass	Thinopyrum intermedium	1
	Total	8

The following seed mixtures are for areas that will receive final reclamation. Areas would be planted to protect them form soil erosion and to restore forage production.

Salt Desert Areas

NOTES: _____

_____

_____

Common Plant Name	Scientific Name	Pounds per acre/PLS*
Grasses		
Indian ricegrass	Oryzopsis hymenoides	2
Squirreltail	Elymus elymoides	2
Galleta	Hilaria jamesii	2
Forbs		
Lewis flax	Linum perenne lewisii	1
Palmer penstemon	Penstemon palmerii	1
Gooseberryleaf glodemallow	Sphaeralcea grossulariifolia	0.5
Shrubs		
Forage kochia	Kochia prostrata	2
Rubber rabbitbrush	Chrysothamnus nauseosus	1
Fourwing saltbush	Atriplex canescens	2
Winterfat	Krascheninnikovai (Eurotia) lanta	2
	Total	15.5

Sagebrush/ Grass Areas

NOTES: _____

_____

_____

Common Name	Scientific Name	Pounds per acre/PLS*
Grasses		
Indian ricegrass	Oryzopsis hymenoides	2
Squirreltail	Elymus elymoides	2
Thickspike wheatgrass	Elymus lanceolatus	1
Crested wheatgrass	Agropyron desertorum	2

Forbs		
Lewis flax	Linum perenne lewisii	1
Palmer penstemon	Penstemon palmerii	1
Small burnet	Sanguisorba minor	1
Shrubs		
Forage kochia	Kochia prostrata	2
Whitestem rabbitbrush	Chrysothamnus nauseosus albicaulis	1
Fourwing saltbush	Atriplex canescens	2
Wyoming big sagebrush	Artmesia tridentata	1
	Total	16

Pinyon/Juniper Areas

NOTES: _____

_____

_____

Common Name	Scientific Name	Pounds per acre/PLS*
Grasses		
Thickspike wheatgrass	Elymus lanceolatus	1.5
Inertmediate wheatgrass	Thinopyrum intermedium	1.5
Squirreltail	Elymus elymoides	2
Crested wheatgrass	Agropyron desertorum	2
Forbs		
Lewis flax	Linum perenne lewisii	1
Palmer penstemon	Penstemon palmerii	1
Small burnet	Sanguisorba minor	1
Shrubs		
Forage kochia	Kochia prostrata	2
Fourwing saltbush	Atriplex canescens	2
Wyoming big sagebrush	Artmesia tridentata wyominggensis var. Gordon Creek	1
Antelope bitterbrush	Purshia tridentata	1
True Mt. mahogany	Cercocarpus montanus	1
	Total	17

Mountain Brush Areas

NOTES: _____

Common Name	Scientific Name	Pounds per acre/PLS*
Grasses		
Sheep fescue	Festuca ovina	2
Smooth brome	Bromus inermis	2
Slender wheatgrass	Elymus trachycaulus	2
Intermediate wheatgrass	Elytirgia intermedia	1.5
Russian wildrye	Psathyrostachys juncea	1
Forbs		
Lewis flax	Linum perenne lewisii	1
Rocky Mt. penstemon	Penstemon strictus	1
Sainfoin	Onobrychis viciifolia	0.5
Shrubs		
Forage kochia	Kochia prostrata	2
Wyoming big sagebrush	Artmesia tridentata wyominggensis var. Gordon Creek	0.5
Antelope bitterbrush	Purshia tridentata	1
Mountain big sagebrush	Artemisia tridentata var. vaseyana	0.5
True Mt. mahogany	Cercocarpus montanus	1
	Total	16

Riparian Areas

NOTES: _____

Common Plant Name	Scientific Name	Pounds per acre/PLS*
Grasses and Grasslike		
Reed canarygrass	Phalaris arundinacea	2
Streambank wheatgrass	Elymus lanceolatus riparium	4
**Nebraska sedge	Carex nebrascensis	
**Baltic rush	Juncus balticus	

Shrubs

**Coyote pillow	Salix exqua	
Skunkbush sumac	Rhus trilobata var. trilobata	2
	Total	8

Tress
** Narrowleaf cottonwood Populus augustifolia
* Seeding rate is listed as pounds per acre of pure live seed (PLS) drilled. Rate is increased by 50 percent if broadcast seeded.
Formula: pure live seed (PLS) =%seed purity x %seed gemination.
** Sedge and rush root mass plugs, willow cuttings and cottonwood bare stock plantings will be done in the spring, within one month after water flows, when the riparian water table and soil moisture will ensure planting success.

United States Department of the Interior

BUREAU OF LAND MANAGEMENT
Utah State Office
P.O. Box 45155
Salt Lake City, Utah 84145-0155

IN REPLY REFER TO:
3160

Memorandum

To: Assistant District Manager Minerals, Moab District

From: Michael Coulthard, Petroleum Engineer

Subject: 1998 Plan of Development Drunkards Wash Unit
Carbon County, Utah.

RECEIVED
OCT 15 1998
DIV OF OIL, GAS & MINING

Pursuant to Email between Lisha Cordova, Division of Oil Gas and Mining, and Mickey Coulthard, Utah State Office, the following well is planned for calendar year 1998 for the Drunkards Wash Unit, Carbon County, Utah.

API #	WELL NAME	LOCATION
43-007-30480	USA 31-199	1125-FSL 0928-FWL 31 14S 09E

This office has no objection to permitting the well at this time.

/s/ Michael L. Coulthard

bcc: File - Drunkards Wash Unit
Division of Oil Gas and Mining
Agr. Sec. Chron
Fluid Chron

State of Utah
DEPARTMENT OF NATURAL RESOURCES
DIVISION OF OIL, GAS AND MINING

1594 West North Temple, Suite 1210
PO Box 145801
Salt Lake City, Utah 84114-5801
801-538-5340
801-359-3940 (Fax)
801-538-7223 (TDD)

Michael O. Leavitt
Governor

Lowell P. Braxton
Division Director

October 19, 1998

River Gas Corporation
1305 South 100 East
Price, Utah 84501

Re: USA 31-199 Well, 1125' FSL, 928' FWL, SW SW, Sec. 31, T. 14 S., R. 9 E., Carbon County, Utah

Gentlemen:

Pursuant to the provisions and requirements of Utah Code Ann. 40-6-1 et seq., Utah Administrative Code R649-3-1 et seq., and the attached Conditions of Approval, approval to drill the referenced well is granted.

This approval shall expire one year from the above date unless substantial and continuous operation is underway, or a request for extension is made prior to the expiration date. The API identification number assigned to this well is 43-007-30480.

Sincerely,

John R. Baza
Associate Director

lwp
Enclosures
cc: Carbon County Assessor
Bureau of Land Management, Moab District Office

Operator: River Gas Corporation

Well Name & Number: USA 31-199

API Number: 43-007-30480

Lease: UTU-76333

Location: SW SW **Sec.** 31 **T.** 14 S. **R.** 9 E.

Conditions of Approval

1. General
   Compliance with the requirements of Utah Admin. R. 649-1 et seq., the Oil and Gas Conservation General Rules, and the applicable terms and provisions of the approved Application for Permit to Drill.

2. Notification Requirements
   Notify the Division within 24 hours prior to spudding the well. Contact Jim Thompson at (801)538-5336.

   Notify the Division prior to commencing operations to plug and abandon the well. Contact Dan Jarvis at (801) 538-5338 or Robert Krueger at (801) 538-5274.

3. Reporting Requirements
   All required reports, forms and submittals shall be promptly filed with the Division, including but not limited to the Entity Action Form (Form 6), Report of Water Encountered During Drilling (Form 7), Weekly Progress Reports for drilling and completion operations, and Sundry Notices and Reports on Wells requesting approval of change of plans or other operational actions.

4. State approval of this well does not supersede the required federal approval which must be obtained prior to drilling.

CONFIDENTIAL

FORM 9

STATE OF UTAH

DIVISION OF OIL, GAS AND MINING

SUNDRY NOTICES AND REPORTS ON WELLS

Do not use this form for proposals to drill new wells, deepen existing wells, or to reenter plugged and abandoned wells. Use APPLICATION FOR PERMIT TO DRILL OR DEEPEN form for such proposals.

5. Lease Designation and Serial Number: ~~UTU-76333~~ ML-48233 CHD

6. If Indian, Allottee or Tribe Name: N/A

7. Unit Agreement Name: Drunkards Wash UTU-67921X

1. Type of Well: OIL ☐ GAS ☒ OTHER:

8. Well Name and Number: Utah 31-199

2. Name of Operator: River Gas Corporation

9. API Well Number: 43-007-30480

3. Address and Telephone Number: 1305 South 100 East, Price, UT 84501 (435)637-8876

10. Field or Pool, or Wildcat: Drunkards Wash

4. Location of Well
Footages: 1125' FSL, 928' FWL
QQ, Sec., T., R., M.: SW/4, SW/4, SEC.31, T14S, R09E, SLB&M

County: Carbon
State: UTAH

11. **CHECK APPROPRIATE BOXES TO INDICATE NATURE OF NOTICE, REPORT, OR OTHER DATA**

NOTICE OF INTENT
(Submit in Duplicate)

- ☐ Abandon
- ☐ Repair Casing
- ☐ Change of Plans
- ☐ Convert to Injection
- ☐ Fracture Treat or Acidize
- ☐ Multiple Completion
- ☐ Other
- ☐ New Construction
- ☐ Pull or Alter Casing
- ☐ Recomplete
- ☐ Reperforate
- ☐ Vent or Flare
- ☐ Water Shut-Off

Approximate date work will start

SUBSEQUENT REPORT
(Submit Original Form Only)

- ☐ Abandon *
- ☐ Repair Casing
- ☐ Change of Plans
- ☐ Convert to Injection
- ☐ Fracture Treat or Acidize
- ☒ Other Name Change
- ☐ New Construction
- ☐ Pull or Alter Casing
- ☐ Reperforate
- ☐ Vent or Flare
- ☐ Water Shut-Off

Date of work completion

Report results of Multiple Completions and Recompletions to different reservoirs on WELL COMPLETION OR RECOMPLETION REPORT AND LOG form.

12. DESCRIBE PROPOSED OR COMPLETED OPERATIONS (Clearly state all pertinent details, and give pertinent dates. If well is directionally drilled, give subsurface locations and measured and true vertical depths for all markers and zones pertinent to this work.)

Notice of Well Name Change from the USA 31-199 to the Utah 31-199 and lease change from Federal to State due to the recent Land Exchange.

ORIGINAL

CONFIDENTIAL

13.

Name & Signature: Dawn J Wilson Title: Administrative Assistant Date: 01/21/99

(This space for state use only)

(4/94)

(See Instructions on Reverse Side)

River Gas Corporation

1305 South 100 East
Price, Utah 84501-9637
(435) 637-8876
(435) 637-8924

RGC

To: Lisha Cordova
From: Don Hamilton
Fax: 1-801-359-3940
Pages: 2
Phone:
Date: 3-2-99
Re: Updated Land Swap Leases
CC:

☐ Urgent ☐ For Your Review ☐ FYI ☐ Please Reply ☐ Please Recycle

From the Desk of.....
Don S. Hamilton -
Permit Specialist

FEDERAL LEASES INVOLVED IN THE TRANSFER FROM FED. TO STATE

UTU#16172 - NEW ML#48174 - RGC L#UT001-095
UTU#49631 - NEW ML#48177 - RGC L#UT001-007FO
UTU#49931 - NEW ML#48178 - RGC L#UT001-026FO
UTU#50646 - NEW ML#48179 - RGC L#UT001-030FO
UTU#50941 - NEW ML#48180 - RGC L#UT001-033FO
UTU#51584 - NEW ML#48181 - RGC L#UT001-099FO
UTU#53872 - NEW ML#48182 - RGC L#UT001-135FO

UTU#60925 - NEW ML#48185 - RGC L#UT001-062AFO - 40.00 ACRES TRANSFERRED
UTU#60925 - NO NEW ML# - RGC L#UT001-062FO - 40.00 ACRES REMAIN

UTU#61154 - NEW ML#48186 - RGC L#UT001-071AFO - 640.00 ACRES TRANSFERRED
UTU#61154 - NO NEW ML# - RGC L#UT001-071FO - 4189.08 ACRES REMAIN

UTU#61155 - NEW ML#48187 - RGC L#UT001-070AFO - 632.58 ACRES TRANSFERRED
UTU#61155 - NO NEW ML# - RGC L#UT001-070FO - 1739.64 ACRES REMAIN

UTU#61156 - NEW ML#48188 - RGC L#UT001-073FO
UTU#62623 - NEW ML#48189 - RGC L#UT01-0108FO
UTU#65296 - NEW ML#48189 - RGC L#UT01-0124FO
UTU#65297 - NEW ML#48197 - RGC L#UT01-0125FO
UTU#65301 - NEW ML#48198 - RGC L#UT01-0126FO
UTU#65946 - NEW ML#48200 - RGC L#UT01-0133FO
UTU#68543 - NEW ML#48203 - RGC L#UT001-0022
UTU#69450 - NEW ML#48204 - RGC L#UT001-0028
UTU#69451 - NEW ML#48205 - RGC L#UT001-070
UTU#69452 - NEW ML#48206 - RGC L#UT001-0029
UTU#69453 - NEW ML#48207 - RGC L#UT001-0030
UTU#69454 - NEW ML#48208 - RGC L#UT001-071
UTU#72005 - NEW ML#48236 - RGC L#UT001-0230
UTU#72351 - NEW ML#48213 - RGC L#UT001-036
UTU#72378 - NEW ML#48215 - RGC L#UT001-041
UTU#72620 - NEW ML#48217 - RGC L#UT001-077
UTU#72624 - NEW ML#48219 - RGC L#UT001-076
UTU#72625 - NEW ML#48220 - RGC L#UT001-079
UTU#73003 - NEW ML#48222 - RGC L#UT001-093
UTU#73657 - NEW ML#48225 - RGC L#UT001-0201
UTU#73876 - NEW ML#48227 - RGC L#UT001-0152
UTU#75017 - NEW ML#48231 - RGC L#UT01-0124AFO
UTU#76333 - NEW ML#48233 - RGC L#UT001-0032A
UTU#77350 - NEW ML#48234 - RGC L#UT01-0125AFO
UTU#77352 - NEW ML#48235 - RGC L#UT001-093A

RECEIVED
MAR 2 1999
DIV OF OIL, GAS & MINING

RGC

RIVER GAS CORPORATION
UTAH OPERATIONS
1305 South 100 East
Price, Utah 84501
Bus. (435) 637-8876
FAX (435) 637-8924

RECEIVED
MAY 4 1999
DIV. OF OIL, GAS & MINING

April 29, 1999

Mr. John Baza
Associate Director
Division of Oil, Gas and Mining
1594 West North Temple, Suite 1210
Salt Lake City, Utah 84114-5801

RE: Exception location – Utah 31-199, Section 31, T14S, R9E, SLB&M
Carbon County, Utah

Dear Mr. Baza:

Please accept this letter as River Gas Corporation's (RGC's) request that this proposed well be approved as an exception location in accordance with Utah Administrative Code § R649-3-3 for geological reasons. This proposed well site does not conform with the general state spacing rules that affects the subject SW/4.

RGC's contractor, GeoScout Land and Title Company, will send your office an affidavit describing the owners within a 460 foot radius of the well. Thank you for your timely consideration of this request, please feel free to contact me if you have any questions or need additional information.

Sincerely yours,

Don S. Hamilton

Don S. Hamilton
Permitting Specialist

cc: Tammie Butts, RGC
Sally Sullivan, Geoscout Land and Title Company
Randy Allen, RGC
Joey Stephenson, RGC
RGC well file

ORIGINAL

CONFIDENTIAL

GeoScout Land & Title Company
P.O. Box 11126 • Salt Lake City, Utah 84147 • (801) 364-7773

May 7, 1999

RECEIVED
MAY - 7 1999
DIV. OF OIL, GAS & MINING

HAND DELIVERED

Mr. John Baza, Associate Director, Oil & Gas
Utah Division of Oil, Gas and Mining
1594 West North Temple, Suite 1210
Salt Lake City, Utah 84180

Re: *River Gas Corporation*
Utah 31-199 Well Exception Location
Section 31, Township 14 South, Range 9 East, SLM
Carbon County, Utah
API No. 43-007-30480

Dear Mr. Baza:

Reference is made to the pending application for permit to drill ("APD") for the captioned well filed by our client, River Gas Corporation ("RGC"). As you may recall, the well was originally to be drilled on Federal Lease UTU-76333. The APD was filed by RGC and received approval from your office on October 19, 1998 subject to BLM approval. In the interim, the lands were transferred to the State of Utah as part of the Land Exchange Act of 1998. SITLA has redesignated the lease as ML-48233.

The proposed location for this well is within the Drunkards Wash Federal Exploratory Unit and the lands are not subject to a spacing order, *i.e.* general state spacing under Utah Admin. Code Rule R649-3-2 applies (pursuant to your agency's recent policy change). The well is proposed at a location 1125′ FSL and 928′ FWL in the SW¼SW¼ of Section 31, which is outside of the "window" allowed under the general state spacing rule. The well cannot be located within the "window" because of geological restraints. As a consequence, an exception location under Utah Admin. Code Rule R649-3-3-1.2 is now required.

As shown by the enclosed Affidavit, the "owners" within a 460 foot radius of the proposed location are River Gas Corporation ("RGC") and Texaco Exploration and Production Inc. ("TEXEP"). RGC, by virtue of its application for the well, and TEXEP, by virtue of the enclosed Consent, have approved the exception location. With the information provided with this letter and contained in your file for the pending APD, all requirements for approval of an exception location have been satisfied. Your prompt approval is therefore requested.

If you have any further questions or concerns regarding this application, please do not hesitate to contact either me or Fred MacDonald at Pruitt, Gushee & Bachtell (801) 531-8446. On behalf of RGC, I thank you for your immediate attention to this matter.

Yours very truly,

Sally M. Sullivan

SMS:cs
1526.167
Enclosures
cc: Joseph L. Stevenson
\pruitt\fmm\1526\167\corr\baza001.doc

AFFIDAVIT

STATE OF UTAH)
:ss
COUNTY OF SALT LAKE)

Sally M. Sullivan, being duly sworn upon her oath, deposes and states:

1. I am the Vice President of GeoScout Land & Title Company ("GeoScout").

2. GeoScout is a company that specializes in mineral abstracts and mineral title searches, including searches of the oil and gas records at the School & Institutional Trust Lands Administration, State of Utah ("SITLA"), and at the United States Department of the Interior, Bureau of Land Management ("BLM"). I have performed such searches on behalf of GeoScout's clients for over nine years.

3. Based solely on the following title data:

a. Drilling Title Opinion dated March 27, 1996 (effective February 1, 1996) covering Federal Lease UTU-76333 and Lots 1-4, E½W½ of Section 31, Township 14, South, Range 9 East, SLM, among other lands, prepared by the law firm of Pruitt, Gushee & Bachtell and provided to me by River Gas Corporation,

as supplemented by my search of the BLM and SITLA records on May 5, 1999, pertaining to said lands and leases (redesignated by SITLA as ML-48233 as a result of the Utah State land Exchange Act of 1998), I have determined the following parties to the "owners" (as that term utilized in the Utah Admin. Code Rule R649-3-3) within a 460´ radius of the proposed Utah 31-199 well located in the SW¼SW¼ of Section 31, Township 14 South, Range 9 East, SLM:

TEXACO EXPLORATION AND PRODUCTION INC.

RIVER GAS CORPORATION

4. The matters stated herein are true of my own knowledge.

Dated this 6th day of May, 1999.

Sally M. Sullivan

SALLY M. SULLIVAN

Subscribed, sworn and acknowledged to and by Sally M. Sullivan before me this 10th day of May, 1999.

Notary Public
PAULA M. KAY
1850 Beneficial Life Tower
Salt Lake City, Utah 84111
My Commission Expires
August 31, 2002
State of Utah

Paula M. Kay

NOTARY PUBLIC

CONSENT TO EXCEPTION LOCATION

TEXACO EXPLORATION AND PRODUCTION, INC., P.O. Box 2100, Denver, CO 80201, an "owner" (as that term is utilized in Utah Admin. Code Rule R649-3-3) within a 460' radius of the USA 31-199 well proposed by River Gas Corporation, hereby, consents to the requested exception location of that well as shown on the attached application for permit to drill.

Dated this 3 day of May, 1999.

TEXACO EXPLORATION AND PRODUCTION, INC.

By: Chuck Snure

Chuck Snure, Land Representative

(990)

(Other instructions on reverse side)

Budget Bureau No. 1004-0136
Expires: December 31, 1991

UNITED STATES
DEPARTMENT OF THE INTERIOR
BUREAU OF LAND MANAGEMENT

APPLICATION FOR PERMIT TO DRILL OR DEEPEN

5. LEASE DESIGNATION AND SERIAL NO.: UTU-76333

6. IF INDIAN, ALLOTTEE OR TRIBE NAME: N/A

7. UNIT AGREEMENT NAME: Drunkards Wash UTU67921X

8. FARM OR LEASE NAME, WELL NO.: USA 31-199

9. API WELL NO.:

10. FIELD AND POOL, OR WILDCAT: Drunkards Wash

11. SEC., T., R., M., OR BLK. AND SURVEY OR AREA: SW/4, SW/4, Sec.31, T14S, R9E SLB&M

1a. TYPE OF WORK: DRILL [X] DEEPEN [ ]

b. TYPE OF WELL: OIL WELL [ ] GAS WELL [X] OTHER SINGLE ZONE [X] MULTIPLE ZONE [ ]

2. NAME OF OPERATOR: RIVER GAS CORPORATION

3. ADDRESS AND TELEPHONE NO.: 1305 So. 100 E. Price, Utah 84501 (801) 637-8876

4. LOCATION OF WELL (Report location clearly and in accordance with any State requirements.*)
At surface: 1125' FSL, 928' FWL
At proposed prod. zone:

14. DISTANCE IN MILES AND DIRECTION FROM NEAREST TOWN OR POST OFFICE*: 8.6 miles southwest of Price, Utah

12. COUNTY OR PARISH: Carbon

13. STATE: UTAH

15. DISTANCE FROM PROPOSED* LOCATION TO NEAREST PROPERTY OR LEASE LINE, FT. (Also to nearest drlg. unit line, if any): 928'

16. NO. OF ACRES IN LEASE: 595.68 acres

17. NO. OF ACRES ASSIGNED TO THIS WELL: 160 acres

18. DISTANCE FROM PROPOSED LOCATION TO NEAREST WELL, DRILLING, COMPLETED, OR APPLIED FOR, ON THIS LEASE, FT.: 2990'

19. PROPOSED DEPTH: 3975'

20. ROTARY OR CABLE TOOLS: Rotary

21. ELEVATIONS (Show whether DF, RT, GR, etc.): GR 6586'

22. APPROX. DATE WORK WILL START*: April 1999

23. PROPOSED CASING AND CEMENTING PROGRAM

SIZE OF HOLE	GRADE, SIZE OF CASING	WEIGHT PER FOOT	SETTING DEPTH	QUANTITY OF CEMENT
14"	12-3/4"	Conductor	25'	
11"	J-55 8-5/8"	24 #/ft	398'	149 sks G+2% CaCl + 1/4# per sack flocel
7-7/8"	N-80 5-1/2"	17 #/ft	3975'	343 sks 50/50 POZ +8%gel+2%CaCl+10%extender. 75 sks "G" thixotropic

RECEIVED
MAY - 7 1999
DIV. OF OIL, GAS & MINING

IN ABOVE SPACE DESCRIBE PROPOSED PROGRAM: If proposal is to deepen, give data on present productive zone and proposed new productive zone. If proposal is to drill or deepen directionally, give pertinent data on subsurface locations and measured and true vertical depths. Give blowout preventer program, if any.

24.

SIGNED Don S Hamilton TITLE Permit Specialist DATE 9/16/98

(This space for Federal or State office use)

PERMIT NO. _____ APPROVAL DATE _____

Application approval does not warrant or certify that the applicant holds legal or equitable title to those rights in the subject lease which would entitle the applicant to conduct operations thereon.
CONDITIONS OF APPROVAL, IF ANY:

APPROVED BY _____ TITLE _____ DATE _____

*See Instructions On Reverse Side

Title 18 U.S.C. Section 1001, makes it a crime for any person knowingly and willfully to make to any department or agency or the United States any false, fictitious or fraudulent statements or representations as to any matter within its jurisdiction.

Range 9 East

S89°58'E - 5096.58' (Recorded)

Township 14 South

North - 2640.00' (Recorded)

West Quarter

31

Drill hole 31-199
Elevation 6585.98'

927.95

≈355' North of Window allotted under R649-3-2

1125.36

North - 2642.65' (Measured)
North - 2640.00' (Recorded)

N00°01'W - 5280' (Recorded)

N89°58'23"W - 2470.67' (Measured)
N89°53'W - 2463.76' (Recorded)

N89°53'W - 2640.00' (Recorded)

LEGEND:

- ● Drill Hole Location
- ⊕ Found Section corner monumented w/ Carbon County aluminum cap unless indicated otherwise.
- ○ Section Corner (Searched, Not Found)

SCALE: 500' 0' 500' 1000'

Basis of Bearing:

Basis of Bearing North recorded between the West quarter Corner and the SW Corner of Section 31, Township 14 South, Range 9 East, Salt Lake Base and Meridian.

Basis Of Elevation:

Basis of Elevation of 6577' as indicated in the SE corner of Section 31, Township 14 South, Range 9 East, Salt Lake Base and Meridian, as shown on the Pinnacle Peak Quadrangle 7.5 Minute Series Map.

Description of Location:

Proposed Drill Hole located in the SW 1/4 SW 1/4 of Section 31; 1125.36' North and 927.95' East from the West corner of Section 31, T14S, R9E, Salt Lake Base & Meridian.

Surveyor's Certificate:

I, Daniel W. Pestrose, a Registered Licensed Land Surveyor, holding Certificate #259966, State of Utah, do hereby certify that the information on this drawing is true and accurate to the best of my knowledge and belief, and was conducted by myself, as shown hereon.

No. 259966 Daniel W. Pestrose

Daniel W. Pestrose

9/10/98

D. ROBERTSON	
L.W.J.	
9/4/98	
1"=1000'	
423	
A-1	
1 of 4	

Cable Valley Inc.

River Gas Corporation
Well# 31-199
Section 31, T14S, R9E, S.L.B.&M.
Carbon County, Utah

State of Utah
DEPARTMENT OF NATURAL RESOURCES
DIVISION OF OIL, GAS AND MINING

Michael O. Leavitt
Governor
Kathleen Clarke
Executive Director
Lowell P. Braxton
Division Director

1594 West North Temple, Suite 1210
PO Box 145801
Salt Lake City, Utah 84114-5801
801-538-5340
801-359-3940 (Fax)
801-538-7223 (TDD)

May 13, 1999

AMENDED PERMIT APPROVAL

River Gas Corporation
1305 South 100 East
Price, Utah 84501

Re: Utah 31-199 Well, 1125' FSL, 928' FWL, SW SW, Sec. 31, T. 14 S., R. 9 E., Carbon County, Utah

Gentlemen:

The above referenced well was previously permitted as a Federal location. In as much as the well was involved in the recent land exchange between the School and Institutional Trust Lands Administration (SITLA) and the Bureau of Land Management (BLM), this Application for Permit to Drill (APD) required additional review and approval. This approval letter serves as an amended and complete approval for the above referenced APD.

Pursuant to the provisions and requirements of Utah Code Ann. 40-6-1 et seq., Utah Administrative Code R649-3-1 et seq., and the attached Conditions of Approval, approval to drill the referenced well is granted.

Appropriate information has been submitted to DOGM by the operator and administrative approval of the requested exception location is hereby granted.

The original APD was approved on October 19, 1998. This letter hereby extends the approval date to one year from the date of this letter. This approval shall expire one year from the above date unless substantial and continuous operation is underway, or a request for extension is made prior to the expiration date. The API identification number assigned to this well is 43-007-30480.

Sincerely,

John R. Baza
Associate Director

lwp
Enclosures
cc: Carbon County Assessor
Bureau of Land Management, Moab District Office
SITLA

Operator: River Gas Corporation

Well Name & Number: Utah 31-199

API Number: 43-007-30480

Lease: State **Surface Owner:** State

Location: SW SW **Sec.** 31 **T.** 14 S. **R.** 9 E.

Conditions of Approval

1. General

   Compliance with the requirements of Utah Admin. R. 649-1 et seq., the Oil and Gas Conservation General Rules, and the applicable terms and provisions of the approved Application for Permit to Drill.

2. Notification Requirements

   Notify the Division of the following actions during drilling of this well:

   - 24 hours prior to cementing or testing casing
   - 24 hours prior to testing blowout prevention equipment
   - 24 hours prior to spudding the well
   - within 24 hours of any emergency changes made to the approved drilling program
   - prior to commencing operations to plug and abandon the well

   Division contacts (please leave a voice mail message if person is not available to take the call):

   - Dan Jarvis at (801) 538-5338
   - Robert Krueger at (801) 538-5274 (plugging)
   - Carol Daniels at (801) 538-5284 (spud)

3. Reporting Requirements

   All required reports, forms and submittals shall be promptly filed with the Division, including but not limited to the Entity Action Form (Form 6), Report of Water Encountered During Drilling (Form 7), Weekly Progress Reports for drilling and completion operations, and Sundry Notices and Reports on Wells requesting approval of change of plans or other operational actions.

4. Conductor and surface casing shall be cemented to surface.

5. Compliance with the Conditions of Approval/Application for Permit to Drill outlined in the Statement of Basis (copy attached).

6. School and Institutional Trust Lands Administration-Oil and Gas Conditions of Approval. (attached)

DIVISION OF OIL, GAS AND MINING

CONFIDENTIAL

SPUDDING INFORMATION

Name of Company: RIVER GAS CORPORATION

Well Name: UTAH 31-199

Api No. 43-007-30480 Lease Type: STATE

Secton 31 Township 14S Range 09E County CARBON

Drilling Contractor PENSE BROTHERS DRL RIG # 30

SPUDDED:

Date 05/24/99

Time 11:05 AM

How DRY HOLE

Drilling will commence

Reported by D J WILSON

Telephone # 1-435-637-8876

Date 05/25/99 Signed: CHD

FORM 9

STATE OF UTAH

DIVISION OF OIL, GAS AND MINING

CONFIDENTIAL

SUNDRY NOTICES AND REPORTS ON WELLS

Do not use this form for proposals to drill new wells, deepen existing wells, or to reenter plugged and abandoned wells.
Use APPLICATION FOR PERMIT TO DRILL OR DEEPEN form for such proposals.

5. Lease Designation and Serial Number: ML-48233

6. If Indian, Allottee or Tribe Name: N/A

7. Unit Agreement Name: Drunkards Wash UTU-67921X

1. Type of Well: OIL ☐ GAS ☒ OTHER:

8. Well Name and Number: Utah 31-199

2. Name of Operator: River Gas Corporation

9. API Well Number: 43-007-30480

3. Address and Telephone Number: 1305 South 100 East, Price, UT 84501 (435)637-8876

10. Field or Pool, or Wildcat: Drunkards Wash

4. Location of Well
Footages: 1125' FSL, 928' FWL
QQ, Sec., T., R., M.: NW/4, NW/4, SEC. ~~04~~ 31, T ~~15~~ 14S, R09E, SLB&M

County: Carbon

State: UTAH

11. **CHECK APPROPRIATE BOXES TO INDICATE NATURE OF NOTICE, REPORT, OR OTHER DATA**

NOTICE OF INTENT
(Submit in Duplicate)

- ☐ Abandon
- ☐ Repair Casing
- ☐ Change of Plans
- ☐ Convert to Injection
- ☐ Fracture Treat or Acidize
- ☐ Multiple Completion
- ☐ Other _____
- ☐ New Construction
- ☐ Pull or Alter Casing
- ☐ Recomplete
- ☐ Reperforate
- ☐ Vent or Flare
- ☐ Water Shut-Off

Approximate date work will start

SUBSEQUENT REPORT
(Submit Original Form Only)

- ☐ Abandon *
- ☐ Repair Casing
- ☐ Change of Plans
- ☐ Convert to Injection
- ☐ Fracture Treat or Acidize
- ☒ Other Weekly Report
- ☐ New Construction
- ☐ Pull or Alter Casing
- ☐ Reperforate
- ☐ Vent or Flare
- ☐ Water Shut-Off

Date of work completion _____

Report results of Multiple Completions and Recompletions to different reservoirs on WELL COMPLETION OR RECOMPLETION REPORT AND LOG form.

12. DESCRIBE PROPOSED OR COMPLETED OPERATIONS (Clearly state all pertinent details, and give pertinent dates. If well is directionally drilled, give subsurface locations and measured and true vertical depths for all markers and zones pertinent to this work.)

See Attached

RECEIVED
JUN - 3 1999
DIV. OF OIL, GAS & MINING

ORIGINAL

CONFIDENTIAL

13.

Name & Signature: Dawn J. Wilson Dawn J Wilson Title: Administrative Assistant Date: 5/28/99

(This space for state use only)

(4/94)

(See Instructions on Reverse Side)

DAILY WELL REPORT

River Gas Corporation
Utah 31-199
1125' FSL,928' FWL
SW/SW, Sec.31,T14S,R9E
CARBON COUNTY, UTAH
SURVEYED ELEVATION: 6586'
API# 43-007-30480
DRILLING CONTRACTOR: Pense Bros Rig#30

PAGE 1 **DRILLING**

Day 1. 5/25/99. Current Depth: 410'. Present Operations: Nipple up to drill 7-7/8" hole. Drilled in 24 hrs:410'. Drilled from 0' to 14' with 15" hammer bit#1. Drilled from 14' to 410' with 11" hammer bit#2. Moving on location. Service rig and rig up. **SPUD Time & Date: 11:05a.m. 5/24/99.** Drill and set 14' conductor. 12:00-3:30pm Nipple up and drill 11" surface hole. TOOH. RIH with guide shoe and 13 joints 8 5/8" casing. Wait on Dowell. Close valve at 7:15pm 5/24/99. WOC. Break loose. Nipple up BOP. BOP test. Nipple up blooie line and prepare to drill 7-7/8" hole.

Day 2. 5/26/99. Current Depth: 2800'. Present Operations: TOOH. Drilled in 24 hrs: 2390'. Drilled from 410' to 2800' with 7-7/8" hammer bit#3. 7:00-9:00am Break down hammer and change bits. 9:00-10:00am TIH and drill out cement. 10:00-12:00pm Drilling 7-7/8" at 680'. 12:00-4:00pm Drilling at 1160'. 4:00-7:00pm Drilling at 1620'. 7:00-11:00pm Drilling at 2200'. 11:00-12:00am Drilling at 2300'. 12:00-4:00am Drilling at 2800'. 4:00-4:30am Circulate hole clean. 4:30-7:00am TOOH.

Day 3. 5/27/99. Current Depth: 3310'. Present Operations: Drilling 7-7/8" hole. Drilled in 24 hrs: 510'. Drilled from 2800' to 3310' with 7-7/8" tri-cone bit#3. 7:00-9:00am Finish TOOH. 9:00-10:00am PU 7-7/8" tri-cone and drill collars. 10:00-4:00pm Working on rig. 4:00-7:00pm Finish tripping in hole. 7:00-7:30pm Condition hole. 7:30-9:00pm Drilling 7-7/8" hole at 2950'. 9:00-10:00pm Drilling at 3000'. 10:00-12:00am Drilling at 3105'. 12:00-3:00am Drilling at 3195'. 3:00-4:00am Drilling at 3225'. 4:00-6:00am Drilling at 3285'. 6:00-7:00am Drilling at 3310'.

Day 4. 5/28/99. Current Depth: 3451'. Present Operations: Moving Drill rig. Drilled in 24 hrs: 141'. Drilled from 2800' to 3451' with 7-7/8" tri-cone bit#3. 7:00-8:15 **TD at 8:05am 5/27/99.** 8:15-9:00am Circulate hole clean. POOH to 2650'. Mix and pump 5 tubs of mud. Start circulating to bottom. Hit hard. Spot 3 rods from bottom. Mix 1 fresh tub of mud and pump down hole. Work on bottom. Circulate on bottom. Short trip to 2800'. Circulate to bottom. TOOH. RU logger. Log well. RD logger. RD and prepare to move.

STATE OF UTAH
DIVISION OF OIL, GAS AND MINING

ENTITY ACTION FORM - FORM 6

OPERATOR River Gas Corporation
ADDRESS 1305 South 100 East
Price, UT 84501

OPERATOR ACCT. NO. 1605

ACTION CODE	CURRENT ENTITY NO.	NEW ENTITY NO.	API NUMBER	WELL NAME	WELL LOCATION QQ	SC	TP	RG	COUNTY	SPUD DATE	EFFECTIVE DATE
B	99999	11256	43-007-30480	Utah 31-199	NW/NW	31 ~~04~~	14S ~~15S~~	09E	CARBON	5/24/99	

WELL 1 COMMENTS: 990625 entity added; (Dinkards Wash u/Fer A-C ") KDR

CONFIDENTIAL

A											

WELL 2 COMMENTS:

A											

WELL 3 COMMENTS:

WELL 4 COMMENTS:

RECEIVED
JUN - 3 1999
DIV. OF OIL, GAS & MINING

WELL 5 COMMENTS:

ORIGINAL

ACTION CODES (See Instructions on back of form)
- A - Establish new entity for new well (single well only)
- B - Add new well to existing entity (group or unit well)
- C - Re-assign well from one existing entity to another existing entity
- D - Re-assign well from one existing entity to a new entity
- E - Other (explain in comments section)

NOTE: Use COMMENT section to explain why each Action Code was selected.

CONFIDENTIAL

Signature

Administrative Assistant — Title

5/28/99 — Date

Phone No. (435) 637-8876

FORM 9

STATE OF UTAH

DIVISION OF OIL, GAS AND MINING

CONFIDENTIAL

SUNDRY NOTICES AND REPORTS ON WELLS

Do not use this form for proposals to drill new wells, deepen existing wells, or to reenter plugged and abandoned wells. Use APPLICATION FOR PERMIT TO DRILL OR DEEPEN form for such proposals.

5. Lease Designation and Serial Number: ML-48233

6. If Indian, Allottee or Tribe Name: N/A

7. Unit Agreement Name: Drunkards Wash UTU-67921X

1. Type of Well: OIL ☐ GAS ☒ OTHER:

8. Well Name and Number: Utah 31-199

2. Name of Operator: River Gas Corporation

9. API Well Number: 43-007-30480

3. Address and Telephone Number: 1305 South 100 East, Price, UT 84501 (435)637-8876

10. Field or Pool, or Wildcat: Drunkards Wash

4. Location of Well

Footages: 1125' FSL, 928' FWL

County: Carbon

QQ, Sec., T., R., M.: SW/4, SW/4, SEC.31, T14S, R09E, SLB&M

State: UTAH

11. **CHECK APPROPRIATE BOXES TO INDICATE NATURE OF NOTICE, REPORT, OR OTHER DATA**

NOTICE OF INTENT
(Submit in Duplicate)

- ☐ Abandon
- ☐ Repair Casing
- ☐ Change of Plans
- ☐ Convert to Injection
- ☐ Fracture Treat or Acidize
- ☐ Multiple Completion
- ☐ Other _____
- ☐ New Construction
- ☐ Pull or Alter Casing
- ☐ Recomplete
- ☐ Reperforate
- ☐ Vent or Flare
- ☐ Water Shut-Off

Approximate date work will start

SUBSEQUENT REPORT
(Submit Original Form Only)

- ☐ Abandon *
- ☐ Repair Casing
- ☐ Change of Plans
- ☐ Convert to Injection
- ☐ Fracture Treat or Acidize
- ☒ Other Weekly Report
- ☐ New Construction
- ☐ Pull or Alter Casing
- ☐ Reperforate
- ☐ Vent or Flare
- ☐ Water Shut-Off

Date of work completion _____

Report results of Multiple Completions and Recompletions to different reservoirs on WELL COMPLETION OR RECOMPLETION REPORT AND LOG form.

12. DESCRIBE PROPOSED OR COMPLETED OPERATIONS (Clearly state all pertinent details, and give pertinent dates. If well is directionally drilled, give subsurface locations and measured and true vertical depths for all markers and zones pertinent to this work.)

See Attached

RECEIVED
JUN 10 1999
DIV. OF OIL, GAS & MINING

ORIGINAL

CONFIDENTIAL

13.

Name & Signature: Dawn J. Wilson Dawn J. Wilson Title: Administrative Assistant Date: 6/4/99

(This space for state use only)

(4/94)

(See Instructions on Reverse Side)

DAILY WELL REPORT

River Gas Corporation
Utah 31-199
1125' FSL,928' FWL
SW/SW, Sec.31,T14S,R9E
CARBON COUNTY, UTAH
SURVEYED ELEVATION: 6586'
API# 43-007-30480
DRILLING CONTRACTOR: Pense Bros Rig#30

PAGE 1 **DRILLING**

Day 1. 5/25/99. Current Depth: 410'. Present Operations: Nipple up to drill 7-7/8" hole. Drilled in 24 hrs:410'. Drilled from 0' to 14' with 15" hammer bit#1. Drilled from 14' to 410' with 11" hammer bit#2. Moving on location. Service rig and rig up. **SPUD Time & Date: 11:05a.m. 5/24/99.** Drill and set 14' conductor. 12:00-3:30pm Nipple up and drill 11" surface hole. TOOH. RIH with guide shoe and 13 joints 8 5/8" casing. Wait on Dowell. Close valve at 7:15pm 5/24/99. WOC. Break loose. Nipple up BOP. BOP test. Nipple up blooie line and prepare to drill 7-7/8" hole.

Day 2. 5/26/99. Current Depth: 2800'. Present Operations: TOOH. Drilled in 24 hrs: 2390'. Drilled from 410' to 2800' with 7-7/8" hammer bit#3. 7:00-9:00am Break down hammer and change bits. 9:00-10:00am TIH and drill out cement. 10:00-12:00pm Drilling 7-7/8" at 680'. 12:00-4:00pm Drilling at 1160'. 4:00-7:00pm Drilling at 1620'. 7:00-11:00pm Drilling at 2200'. 11:00-12:00am Drilling at 2300'. 12:00-4:00am Drilling at 2800'. 4:00-4:30am Circulate hole clean. 4:30-7:00am TOOH.

Day 3. 5/27/99. Current Depth: 3310'. Present Operations: Drilling 7-7/8" hole. Drilled in 24 hrs: 510'. Drilled from 2800' to 3310' with 7-7/8" tri-cone bit#3. 7:00-9:00am Finish TOOH. 9:00-10:00am PU 7-7/8" tri-cone and drill collars. 10:00-4:00pm Working on rig. 4:00-7:00pm Finish tripping in hole. 7:00-7:30pm Condition hole. 7:30-9:00pm Drilling 7-7/8" hole at 2950'. 9:00-10:00pm Drilling at 3000'. 10:00-12:00am Drilling at 3105'. 12:00-3:00am Drilling at 3195'. 3:00-4:00am Drilling at 3225'. 4:00-6:00am Drilling at 3285'. 6:00-7:00am Drilling at 3310'.

Day 4. 5/28/99. Current Depth: 3451'. Present Operations: Moving Drill rig. Drilled in 24 hrs: 141'. Drilled from 2800' to 3451' with 7-7/8" tri-cone bit#3. 7:00-8:15 **TD at 8:05am 5/27/99.** 8:15-9:00am Circulate hole clean. POOH to 2650'. Mix and pump 5 tubs of mud. Start circulating to bottom. Hit hard. Spot 3 rods from bottom. Mix 1 fresh tub of mud and pump down hole. Work on bottom. Circulate on bottom. Short trip to 2800'. Circulate to bottom. TOOH. RU logger. Log well. RD logger. RD and prepare to move.

Day 5. 5/29/99. Current Depth: 3451'. Present Operations: Making scraper run. Drilled in 24 hrs: 0'. Move drill rig. Move on and RU workover rig. Unload and set pipe racks. Unload casing. Tally 5-1/2" casing. RIH with 5-1/2" float shoe and 81 joints 5-1/2' casing. Land casing. RU Dowell. Cement 5-1/2" plug down at 4:13pm 5/28/99. Trace cement to surface. RD Dowell and shut down for the night.

DAILY WELL REPORT

River Gas Corporation
Utah 31-199
1125' FSL,928' FWL
SW/SW, Sec.31,T14S,R9E
CARBON COUNTY, UTAH
SURVEYED ELEVATION: 6586'
API# 43-007-30480
DRILLING CONTRACTOR: Pense Bros Rig#30

PAGE 1

DRILLING

Day 6. 5/29/99. Current Depth: 3451'. Present Operations: Making scraper run. Nipple down BOP and nipple up well head. PU 4-3/4" nom. casing scraper and 109 joints tubing. Tag at 3390' (5' fill). POOH with scraper and tubing and lay down on trailer. RD and move off location.

FORM 9

STATE OF UTAH

DIVISION OF OIL, GAS AND MINING

CONFIDENTIAL

5. Lease Designation and Serial Number: ML-48233

SUNDRY NOTICES AND REPORTS ON WELLS

6. If Indian, Allottee or Tribe Name: N/A

Do not use this form for proposals to drill new wells, deepen existing wells, or to reenter plugged and abandoned wells. Use APPLICATION FOR PERMIT TO DRILL OR DEEPEN form for such proposals.

7. Unit Agreement Name: Drunkards Wash UTU-67921X

1. Type of Well: OIL ☐ GAS ☒ OTHER:

8. Well Name and Number: Utah 31-199

2. Name of Operator: River Gas Corporation

9. API Well Number: 43-007-30480

3. Address and Telephone Number: 1305 South 100 East, Price, UT 84501 (435)637-8876

10. Field or Pool, or Wildcat: Drunkards Wash

4. Location of Well

Footages: 1125' FSL, 928' FWL

County: Carbon

QQ, Sec., T., R., M.: SW/4, SW/4, SEC.31, T14S, R09E, SLB&M

State: UTAH

11. **CHECK APPROPRIATE BOXES TO INDICATE NATURE OF NOTICE, REPORT, OR OTHER DATA**

NOTICE OF INTENT
(Submit in Duplicate)

- ☐ Abandon
- ☐ Repair Casing
- ☐ Change of Plans
- ☐ Convert to Injection
- ☐ Fracture Treat or Acidize
- ☐ Multiple Completion
- ☐ Other _____
- ☐ New Construction
- ☐ Pull or Alter Casing
- ☐ Recomplete
- ☐ Reperforate
- ☐ Vent or Flare
- ☐ Water Shut-Off

Approximate date work will start

SUBSEQUENT REPORT
(Submit Original Form Only)

- ☐ Abandon *
- ☐ Repair Casing
- ☐ Change of Plans
- ☐ Convert to Injection
- ☐ Fracture Treat or Acidize
- ☒ Other Weekly Report
- ☐ New Construction
- ☐ Pull or Alter Casing
- ☐ Reperforate
- ☐ Vent or Flare
- ☐ Water Shut-Off

Date of work completion _____

Report results of Multiple Completions and Recompletions to different reservoirs on WELL COMPLETION OR RECOMPLETION REPORT AND LOG form.

12. DESCRIBE PROPOSED OR COMPLETED OPERATIONS (Clearly state all pertinent details, and give pertinent dates. If well is directionally drilled, give subsurface locations and measured and true vertical depths for all markers and zones pertinent to this work.)

See Attached

CONFIDENTIAL

RECEIVED
JUL - 9 1999
DIV. OF OIL, GAS & MINING

ORIGINAL

13.

Name & Signature: Dawn J. Wilson *Dawn J. Wilson* Title: Administrative Assistant Date: 7/2/99

(This space for state use only)

(4/94)

(See Instructions on Reverse Side)

DAILY WELL REPORT

River Gas Corporation
Utah 31-199
1125' FSL,928' FWL
SW/SW, Sec.31,T14S,R9E
CARBON COUNTY, UTAH
SURVEYED ELEVATION: 6586'
API# 43-007-30480
DRILLING CONTRACTOR: Pense Bros Rig#30

PAGE 1 **DRILLING**

Day 1. 5/25/99. Current Depth: 410'. Present Operations: Nipple up to drill 7-7/8" hole. Drilled in 24 hrs:410'. Drilled from 0' to 14' with 15" hammer bit#1. Drilled from 14' to 410' with 11" hammer bit#2. Moving on location. Service rig and rig up. **SPUD Time & Date: 11:05a.m. 5/24/99.** Drill and set 14' conductor. 12:00-3:30pm Nipple up and drill 11" surface hole. TOOH. RIH with guide shoe and 13 joints 8 5/8" casing. Wait on Dowell. Close valve at 7:15pm 5/24/99. WOC. Break loose. Nipple up BOP. BOP test. Nipple up blooie line and prepare to drill 7-7/8" hole.

Day 2. 5/26/99. Current Depth: 2800'. Present Operations: TOOH. Drilled in 24 hrs: 2390'. Drilled from 410' to 2800' with 7-7/8" hammer bit#3. 7:00-9:00am Break down hammer and change bits. 9:00-10:00am TIH and drill out cement. 10:00-12:00pm Drilling 7-7/8" at 680'. 12:00-4:00pm Drilling at 1160'. 4:00-7:00pm Drilling at 1620'. 7:00-11:00pm Drilling at 2200'. 11:00-12:00am Drilling at 2300'. 12:00-4:00am Drilling at 2800'. 4:00-4:30am Circulate hole clean. 4:30-7:00am TOOH.

Day 3. 5/27/99. Current Depth: 3310'. Present Operations: Drilling 7-7/8" hole. Drilled in 24 hrs: 510'. Drilled from 2800' to 3310' with 7-7/8" tri-cone bit#3. 7:00-9:00am Finish TOOH. 9:00-10:00am PU 7-7/8" tri-cone and drill collars. 10:00-4:00pm Working on rig. 4:00-7:00pm Finish tripping in hole. 7:00-7:30pm Condition hole. 7:30-9:00pm Drilling 7-7/8" hole at 2950'. 9:00-10:00pm Drilling at 3000'. 10:00-12:00am Drilling at 3105'. 12:00-3:00am Drilling at 3195'. 3:00-4:00am Drilling at 3225'. 4:00-6:00am Drilling at 3285'. 6:00-7:00am Drilling at 3310'.

Day 4. 5/28/99. Current Depth: 3451'. Present Operations: Moving Drill rig. Drilled in 24 hrs: 141'. Drilled from 2800' to 3451' with 7-7/8" tri-cone bit#3. 7:00-8:15 **TD at 8:05am 5/27/99.** 8:15-9:00am Circulate hole clean. POOH to 2650'. Mix and pump 5 tubs of mud. Start circulating to bottom. Hit hard. Spot 3 rods from bottom. Mix 1 fresh tub of mud and pump down hole. Work on bottom. Circulate on bottom. Short trip to 2800'. Circulate to bottom. TOOH. RU logger. Log well. RD logger. RD and prepare to move.

Day 5. 5/29/99. Current Depth: 3451'. Present Operations: Making scraper run. Drilled in 24 hrs: 0'. Move drill rig. Move on and RU workover rig. Unload and set pipe racks. Unload casing. Tally 5-1/2" casing. RIH with 5-1/2" float shoe and 81 joints 5-1/2' casing. Land casing. RU Dowell. Cement 5-1/2" plug down at 4:13pm 5/28/99. Trace cement to surface. RD Dowell and shut down for the night.

DAILY WELL REPORT

River Gas Corporation
Utah 31-199
1125' FSL,928' FWL
SW/SW, Sec.31,T14S,R9E
CARBON COUNTY, UTAH
SURVEYED ELEVATION: 6586'
API# 43-007-30480
DRILLING CONTRACTOR: Pense Bros Rig#30

PAGE 1

DRILLING

Day 6. 5/29/99. Current Depth: 3451'. Present Operations: Making scraper run. Nipple down BOP and nipple up well head. PU 4-3/4" nom. casing scraper and 109 joints tubing. Tag at 3390' (5' fill). POOH with scraper and tubing and lay down on trailer. RD and move off location.

6/30/99. Moved rig to location. Rig up. Spot tubing trailer. TIH with catch tool. Pull plug at 3054'. TOOH. Laid tubing down on trailer. Closed well in for the night.

7/1/99. Rig up Halliburton. Perorate and frac four zones.
Zone 1. 3192'-96', 3211'-15', 3220'-25'
Zone 2. 3114'-17', 3120'-23', 3140'-42', 3151'-53', 3166'-76'
Zone 3. 3067'-70', 3074'-76', 3080'-88', 3090'-93', 3095'-98', 3100'-04'
Zone 4. 3002'-10', 3015'-18', 3024'-30', 3052'-60'

7/1/99. TIH with catch tool. Tag sand at 2968'. Wash to plug at 3064'. Pull plug. Trip out. Laid down plug. Closed well in for the night.

7/2/99. TIH. Tag sand at 3059'. Wash to TD at 3109'. Pull plug. Trip out. Laid down plug. TIH. Tag sand at 3124'. Wash to plug at 3184'. Trip out. Laid down plug. TIH with notch collar. Tag sand at 3320'. Wash to TD at 3395.67'. Circulated well clean. Trip out of hole. Made up mud anchor, perf sub 4'x7/8" and seating nipple. TIH with 105 joints of tubing. Nipple down BOP. Made up tubing head. Closed well in for the night.

AUG 31 1999

FORM 8

STATE OF UTAH
DIVISION OF OIL, GAS AND MINING

OIL, GAS & MINING

ORIGINAL

WELL COMPLETION OR RECOMPLETION REPORT AND LOG

CONFIDENTIAL

1a. TYPE OF WELL: OIL WELL ☐ GAS WELL ☒ DRY ☐ Other

b. TYPE OF COMPLETION: NEW WELL ☒ WORK OVER ☐ DEEP-EN ☐ PLUG BACK ☐ DIFF. RESVR. ☐ Other

5. LEASE DESIGNATION AND SERIAL NO.: ML - 48233

6. IF INDIAN, ALLOTTEE OR TRIBE NAME: N/A

7. UNIT AGREEMENT NAME: Drunkards Wash UTU-67921X

8. FARM OR LEASE NAME: Utah

9. WELL NO.: 31-199

10. FIELD AND POOL, OR WILDCAT: Drunkards Wash

11. SEC., T., R., M., OR BLOCK AND SURVEY OR AREA: SW/SW, Sec 31, T14S, R09E, SLB&M

2. NAME OF OPERATOR: RIVER GAS CORPORATION

3. ADDRESS OF OPERATOR: 1305 South 100 East, Price, UT 84501 (435) 637-8876

CONFIDENTIAL PERIOD EXPIRED 8-2-00

4. LOCATION OF WELL (Report clearly and in accordance with any State requirements)

At surface 1125' FSL & 928' FWL

At top prod. interval reported below

location

14. API NO.	DATE ISSUED	12. COUNTY	13. STATE
43-007-30480	05/13/99	Carbon	Utah

15. DATE SPUDDED	16. DATE T.D. REACHED	17. DATE COMPL. (Ready to prod.) or (Plug & Abd.)	18. ELEVATIONS (DF, REB, RT, GR, ETC.)	19. ELEV. CASINGHEAD
05/24/99	05/27/99	07/02/99	GR 6586'	N/A

20. TOTAL DEPTH, MD & TVD	21. PLUG BACK T.D., MD & TVD	22. IF MULTIPLE COMPL., HOW MANY	23. INTERVALS DRILLED BY →	ROTARY TOOLS	CABLE TOOLS
3451'	3395'	N/A		to TD	N/A

24. PRODUCING INTERVAL(S), OF THIS COMPLETION--TOP, BOTTOM, NAME (MD OR TVD): Ferron Coal - Top Coal 3002' & Bottom Coal 3225'

25. WAS DIRECTIONAL SURVEY MADE: -----

26. TYPE ELECTRIC AND OTHER LOGS RUN CBL 6-1-99: Dual Induction, Laterolog, SFF, GR, Caliper, Comp Density, & Neutron

27. WAS WELL CORED YES ☐ NO ☒ (Submit analysis)
DRILL STEM TEST YES ☐ NO ☒ (See reverse side)

28. CASING RECORD (Report all strings set in well)

CASING SIZE	WEIGHT, LB./FT.	DEPTH SET (MD)	HOLE SIZE	CEMENT RECORD	AMOUNT PULLED
12 3/4"	Conductor	14'	14 3/4"	Conductor	
8 5/8"	24#	385'	11"	125 sxs Class G, 2% CaCl, 4% Gel, & 1/4#/sx Flocele	
5 1/2"	17#	3395'	7 7/8"	315 sxs 50/50 POZ, 8% D-20, 10% D-44, 2% S-1,	
				75 sxs 10-1 RFC (Thixotropic)	

29. LINER RECORD

SIZE	TOP (MD)	BOTTOM (MD)	SACKS CEMENT	SCREEN (MD)

30. TUBING RECORD

SIZE	DEPTH SET (MD)	PACKER SET (MD)
2-7/8"	3272'	N/A

31. PERFORATION RECORD (Interval, size and number)

1) 3002'-10',3015'-18',3024'-30',3052'-60' 4spf .78"
2) 3067'-70',3074'-76',3080'-88',3090'-93', 3095'-98',3100'-04 4spf .78"
3) 3114'-17',3120'-23',3140'-42',3151'-53', 3166'-76' 4spf .78"
4) 3192'-96',3211'-15',3220'-25' 4spf .78"

32. ACID, SHOT, FRACTURE, CEMENT SQUEEZE,ETC.

DEPTH INTERVAL (MD)	AMOUNT AND KIND OF MATERIAL USED
Upper 3002'-3060'	60,300#, 16/30; 25,903 gal fluid
Middle 3067'-3104'	65,000#, 16/30; 33,853 gal fluid
Lower 3114'-3176'	61,000#, 16/30; 37,270 gal fluid
Lowest 3192'-3225'	60,000#, 16/30; 28,963 gal fluid

33. PRODUCTION

DATE FIRST PRODUCTION	PRODUCTION METHOD (Flowing, gas lift, pumping---size and type of pump)	WELL STATUS (Producing or shut-in)
07/06/99	Pumping - 2 1/2" x 2" x 16' RWAC	Producing

DATE OF TEST	HOURS TESTED	CHOKE SIZE	PROD'N. FOR TEST PERIOD →	OIL---BBL.	GAS---MCF.	WATER---BBL.	GAS-OIL RATIO
07/06/99	24hrs.	--------		N/A	276	347	

FLOW. TUBING PRESS.	CASING PRESSURE	CALCULATED 24-HOUR RATE →	OIL---BBL.	GAS---MCF.	WATER---BBL.	OIL GRAVITI - API (CORR.)
17	18		N/A	276	347	N/A

34. DISPOSITION OF GAS (Sold,used for fuel, vented, etc.): SOLD

TEST WITNESSED BY: Jerry H. Dietz

35. LIST OF ATTACHMENTS

36 I hereby certify that the foregoing and attached information is complete and correct as determined from all available records

SIGNED Callen Hurtt TITLE Development Manager/P.E. DATE August 25, 1999

See Spaces for Additional Data on Reverse Side

WELL NUMBER: Utah 31-199

37 SUMMARY OF POROUS ZONES: (Show all important zones of porosity and contents thereof; cored intervals; and all drill-stem, tests, including depth interval tested, cushion used, time tool open, flowing and shut-in pressures, and recoveries):

FORMATION	TOP	BOTTOM	DESCRIPTION, CONTENTS, ETC.
Ferron	3003'	3173'	Coals and sandstones Coal Interval: 3003'-3173'

38. GEOLOGIC MARKERS

NAME	TOP MEAS.DEPTH	TOP TRUE VERT. DEPTH
Blue Gate	2648'	
Bentonite		
Tununk Shale	3330'	

CONFIDENTIAL

ORIGINAL

FORM 9

STATE OF UTAH

DIVISION OF OIL, GAS AND MINING

ORIGINAL CONFIDENTIAL

SUNDRY NOTICES AND REPORTS ON WELLS

Do not use this form for proposals to drill new wells, deepen existing wells, or to reenter plugged and abandoned wells. Use APPLICATION FOR PERMIT TO DRILL OR DEEPEN form for such proposals.

5. Lease Designation and Serial Number: ML - 48233

6. If Indian, Allottee or Tribe Name: N/A

7. Unit Agreement Name: UTU67921X Drunkards Wash

1. Type of Well: OIL ☐ GAS ☒ OTHER:

8. Well Name and Number: Utah 31-199

2. Name of Operator: River Gas Corporation

9. API Well Number: 43-007-30480

3. Address and Telephone Number: 1305 South 100 East, Price, UT 84501 (435) 637-8876

10. Field or Pool, or Wildcat: Drunkards Wash

4. Location of Well

Footages: 1125' FSL, 928' FWL

County: ~~Emery~~ Carbon County

QQ, Sec., T., R., M.: SW/SW SEC. 31, T14S, R09E, SLB & M

State: Utah

11. **CHECK APPROPRIATE BOXES TO INDICATE NATURE OF NOTICE, REPORT, OR OTHER DATA**

NOTICE OF INTENT
(Submit in Duplicate)

- ☐ Abandon
- ☐ Repair Casing
- ☐ Change of Plans
- ☐ Convert to Injection
- ☐ Fracture Treat or Acidize
- ☐ Multiple Completion
- ☐ Other
- ☐ New Construction
- ☐ Pull or Alter Casing
- ☐ Recomplete
- ☐ Reperforate
- ☐ Vent or Flare
- ☐ Water Shut-Off

Approximate date work will start

SUBSEQUENT REPORT
(Submit Original Form Only)

- ☐ Abandon *
- ☐ Repair Casing
- ☐ Change of Plans
- ☐ Convert to Injection
- ☐ Fracture Treat or Acidize
- ☒ Other Online Notice
- ☐ New Construction
- ☐ Pull or Alter Casing
- ☐ Reperforate
- ☐ Vent or Flare
- ☐ Water Shut-Off

Date of work completion July 06, 1999

Report results of Multiple Completions and Recompletions to different reservoirs on WELL COMPLETION OR RECOMPLETION REPORT AND LOG form.

* Must be accompanied by a cement verification report.

12. DESCRIBE PROPOSED OR COMPLETED OPERATIONS (Clearly state all pertinent details, and give pertinent dates. If well is directionally drilled, give subsurface locations and measured and true vertical depths for all markers and zones pertinent to this work.)

Please be advised that the above referenced well was placed online and showed first production on 07/06/99.

RECEIVED
AUG 31 1999
DIV. OF OIL, GAS & MINING

13.

Name & Signature: Rochelle Crabtree Rochelle Crabtree Title: Administrative Asst. - Production Date: 08/14/99

(This space for state use only)

(4/94)

(See Instructions on Reverse Side)

FORM 9

STATE OF UTAH

DIVISION OF OIL, GAS AND MINING

ORIGINAL

5. Lease Designation and Serial Number: ML - 48233	
6. If Indian, Allottee or Tribe Name: N/A	
7. Unit Agreement Name: UTU67921X Drunkards Wash	
8. Well Name and Number: Utah 31-199	
9. API Well Number: 43-007-30480	
10. Field or Pool, or Wildcat: Drunkards Wash	

SUNDRY NOTICES AND REPORTS ON WELLS

Do not use this form for proposals to drill new wells, deepen existing wells, or to reenter plugged and abandoned wells.
Use APPLICATION FOR PERMIT TO DRILL OR DEEPEN form for such proposals.

CONFIDENTIAL

1. Type of Well: OIL ☐ GAS ☒ OTHER:

2. Name of Operator: River Gas Corporation

3. Address and Telephone Number: 6825 South 5300 West, P.O. Box 851, Price, UT 84501 (435) 613-9777

4. Location of Well
Footages: County: 1125' FSL, 928' FWL — Carbon County
QQ, Sec., T., R., M.: State: SW/SW SEC. 31, T14S, R09E, SLB & M — Utah

11. CHECK APPROPRIATE BOXES TO INDICATE NATURE OF NOTICE, REPORT, OR OTHER DATA

NOTICE OF INTENT
(Submit in Duplicate)

- ☐ Abandon
- ☐ Repair Casing
- ☐ Change of Plans
- ☐ Convert to Injection
- ☐ Fracture Treat or Acidize
- ☐ Multiple Completion
- ☐ Other
- ☐ New Construction
- ☐ Pull or Alter Csg
- ☐ Recomplete
- ☐ Reperforate
- ☐ Vent or Flare
- ☐ Water Shut-Off

Approximate date work will start _____

SUBSEQUENT REPORT
(Submit Original Form Only)

- ☐ Abandon *
- ☐ Repair Casing
- ☐ Change of Plans
- ☐ Convert to Injection
- ☐ Fracture Treat or Acidize
- ☒ Other Chemical/Flush Treatment
- ☐ New Construction
- ☐ Pull or Alter Csg
- ☐ Reperforate
- ☐ Vent or Flare
- ☐ Water Shut-Off

Date of work completion 04/20/2000

Report results of Multiple Completions and Recompletions to different reservoirs on WELL COMPLETION OR RECOMPLETION REPORT AND LOG form.

* Must be accompanied by a cement verification report.

12. DESCRIBE PROPOSED OR COMPLETED OPERATIONS (Clearly state all pertinent details, and give pertinent dates. If well is directionally drilled, give subsurface locations and measured and true vertical depths for all markers and zones pertinent to this work.)

Please be advised that the above referenced well was chemically treated with 4000 gallons of low Ph fluid and 250 gallons of 7 1/2% HCL on 04/20/00.

RECEIVED
JUL 03 2000
DIVISION OF
OIL, GAS AND MINING

13.

Name & Signature: Rochelle Crabtree Rochelle Crabtree Title: Administrative Assistant Date: 06/28/2000

(This space for state use only)

(4/94) (See Instructions on Reverse Side)

FORM 9

STATE OF UTAH

DIVISION OF OIL, GAS AND MINING

ORIGINAL

5. Lease Designation and Serial Number: ML - 48233	
6. If Indian, Allottee or Tribe Name: N/A	
7. Unit Agreement Name: UTU67921X Drunkards Wash	
8. Well Name and Number: Utah 31-199	
9. API Well Number: 43-007-30480	
10. Field or Pool, or Wildcat: Drunkards Wash	

SUNDRY NOTICES AND REPORTS ON WELLS

Do not use this form for proposals to drill new wells, deepen existing wells, or to reenter plugged and abandoned wells. Use APPLICATION FOR PERMIT TO DRILL OR DEEPEN form for such proposals.

1. Type of Well: OIL ☐ GAS ☒ OTHER:

2. Name of Operator: River Gas Corporation

3. Address and Telephone Number: 6825 South 5300 West, P.O. Box 851, Price, UT 84501 (435) 613-9777

4. Location of Well
Footages: County: 1125' FSL, 928' FWL — Carbon County
QQ, Sec., T., R., M.: State: SW/SW SEC. 31, T14S, R09E, SLB & M — Utah

11. CHECK APPROPRIATE BOXES TO INDICATE NATURE OF NOTICE, REPORT, OR OTHER DATA

NOTICE OF INTENT
(Submit in Duplicate)

- ☐ Abandon
- ☐ Repair Casing
- ☐ Change of Plans
- ☐ Convert to Injection
- ☐ Fracture Treat or Acidize
- ☐ Multiple Completion
- ☐ Other _____
- ☐ New Construction
- ☐ Pull or Alter Csg
- ☐ Recomplete
- ☐ Reperforate
- ☐ Vent or Flare
- ☐ Water Shut-Off

Approximate date work will start _____

SUBSEQUENT REPORT
(Submit Original Form Only)

- ☐ Abandon *
- ☐ Repair Casing
- ☐ Change of Plans
- ☐ Convert to Injection
- ☐ Fracture Treat or Acidize
- ☒ Other Chemical/Flush Treatment
- ☐ New Construction
- ☐ Pull or Alter Csg
- ☐ Reperforate
- ☐ Vent or Flare
- ☐ Water Shut-Off

Date of work completion 04/20/2000

Report results of Multiple Completions and Recompletions to different reservoirs on WELL COMPLETION OR RECOMPLETION REPORT AND LOG form.

* Must be accompanied by a cement verification report.

12. DESCRIBE PROPOSED OR COMPLETED OPERATIONS (Clearly state all pertinent details, and give pertinent dates. If well is directionally drilled, give subsurface locations and measured and true vertical depths for all markers and zones pertinent to this work.)

Please be advised that the above referenced well was chemically treated with 4000 gallons of low Ph fluid and 250 gallons of 7 1/2% HCL on 04/20/00.

RECEIVED
JUL 11 2000
DIVISION OF
OIL, GAS AND MINING

13.

Name & Signature: Rochelle Crabtree Rochelle Crabtree Title: Administrative Assistant Date: 06/28/2000

(This space for state use only)

Accepted by the
Utah Division of
Oil, Gas and Mining
FOR RECORD ONLY

WTC

(4/94) (See Instructions on Reverse Side)

FORM 9

STATE OF UTAH

DIVISION OF OIL, GAS AND MINING

SUNDRY NOTICES AND REPORTS ON WELLS

Do not use this form for proposals to drill new wells, deepen existing wells, or to reenter plugged and abandoned wells
Use APPLICATION FOR PERMIT TO DRILL OR DEEPEN form for such proposals

5 Lease Designation and Serial Number:

6 If Indian, Allottee or Tribe Name:

7 Unit Agreement Name:

8 Well Name and Number:

9 API Well Number:

10 Field or Pool, or Wildcat:

1 Type of Well: OIL ☐ GAS ☒ OTHER:

2 Name of Operator: River Gas Corporation

3 Address and Telephone Number: 6825 S. 5300 W. P.O. Box 851 Price, Utah 84501 (435) 613-9777

4 Location of Well
Footages:
QQ, Sec , T , R , M : SLB & M

County: Carbon County
State: Utah

11 **CHECK APPROPRIATE BOXES TO INDICATE NATURE OF NOTICE, REPORT, OR OTHER DATA**

NOTICE OF INTENT
(Submit in Duplicate)

- ☐ Abandon
- ☐ Repair Casing
- ☐ Change of Plans
- ☐ Convert to Injection
- ☐ Fracture Treat or Acidize
- ☐ Multiple Completion
- ☐ New Construction
- ☐ Pull or Alter Casing
- ☐ Recomplete
- ☐ Reperforate
- ☐ Vent or Flare
- ☐ Water Shut-Off
- ☒ Other Change of Operator

Approximate date work will start _____

SUBSEQUENT REPORT
(Submit Original Form Only)

- ☐ Abandon *
- ☐ Repair Casing
- ☐ Change of Plans
- ☐ Convert to Injection
- ☐ Fracture Treat or Acidize
- ☐ Other _____
- ☐ New Construction
- ☐ Pull or Alter Casing
- ☐ Reperforate
- ☐ Vent or Flare
- ☐ Water Shut-Off

Date of work completion _____

Report results of Multiple Completions and Recompletions to different reservoirs on WELL COMPLETION OR RECOMPLETION REPORT AND LOG form

* Must be accompanied by a cement verification report

12 DESCRIBE PROPOSED OR COMPLETED OPERATIONS (Clearly state all pertinent details, and give pertinent dates If well is directionally drilled, give subsurface locations and measured and true vertical depths for all markers and zones pertinent to this work)

Please be advised that River Gas Corporation is transferring ownership of the attached list of wells to Phillips Petroleum Company 9780 Mt. Pyramid Court, Englewood, CO 80112.
Please direct all correspondence and reports to: Phillips Petroleum Company P.O. Box 3368, Englewood, CO 80155-3368.
Effective 1/1/01

13

Name & Signature: Cal Hurtt *Cal Hurtt* Title: Development Manager Date: 12/19/00

(This space for state use only)

(4/94) (See Instructions on Reverse Side)

Drunkards Wash Total Well Count

(Through 2000 Drilling Season)

Well #	API #	Location	Section	Tship	Range
Utah 25-09-01	4300730130	1683 FSL, 877 FEL	25	14S	09E
Utah 36-01-02	4300730178	600 FNL, 620 FEL	36	14S	09E
Utah 31-03-03	4300730143	740 FNL, 1780 FWL	31	14S	10E
Utah 36-03-04	4300730142	822 FNL, 2176 FWL	36	14S	09E
Utah 36-09-05	4300730144	2050 FSL, 700 FEL	36	14S	09E
Utah 25-07-06	4300730156	2599 FNL, 1902 FEL	25	14S	09E
Utah 25-11-07	4300730157	1718 FSL, 2210 FWL	25	14S	09E
Utah 26-16-08	4300730181	800 FSL, 750 FEL	26	14S	09E
Utah 35-01-09	4300730180	650 FNL, 850 FEL	35	14S	09E
Utah 31-12-10	4300730183	1995 FSL, 745 FWL	31	14S	10E
Utah 36-11-11	4300730184	1837 FSL, 1903 FWL	36	14S	09E
Utah 19-14-12	4300730182	860 FSL, 1780 FWL	19	14S	10E
Utah 30-05-13	4300730179	1493 FNL, 728 FWL	30	14S	10E
Utah 30-13-14	4300730185	612 FSL, 670 FWL	30	14S	10E
Utah 24-01-15	4300730191	1320 FNL, 1320 FEL	24	14S	09E
Utah 24-03-16	4300730187	1310 FNL, 1525 FWL	24	14S	09E
Utah 24-12-17	4300730208	1320 FSL, 1320 FWL	24	14S	09E
Utah 24-16-18	4300730192	482 FSL, 940 FEL	24	14S	09E
Utah 23-02-19	4300730207	963 FNL, 1470 FEL	23	14S	09E
Utah 23-04-20	4300730194	1291 FNL, 1257 FWL	23	14S	09E
Utah 23-14-21	4300730200	739 FSL, 1716 FWL	23	14S	09E
Utah 23-09-22	4300730201	1320 FSL, 1320 FEL	23	14S	09E
Utah 26-01-23	4300730205	1320 FNL, 1320 FEL	26	14S	09E
Utah 26-06-24	4300730202	1480 FNL, 2000 FWL	26	14S	09E
Utah 26-11-25	4300730204	1500 FSL, 1500 FWL	26	14S	09E
Utah 35-03-26	4300730203	1085 FNL, 1805 FWL	35	14S	09E
Utah 35-10-27	4300730197	2567 FSL, 2151 FEL	35	14S	09E
Utah 35-13-28	4300730198	1236 FSL, 1152 FWL	35	14S	09E
Utah 27-08-29	4300730193	2134 FNL, 753 FEL	27	14S	09E
Utah 27-09-30	4300730186	1359 FSL, 707 FEL	27	14S	09E
Utah 34-01-31	4300730196	464 FNL, 540 FEL	34	14S	09E
Utah 34-09-32	4300730195	1938 FSL, 435 FEL	34	14S	09E
Utah 25-04-33	4300730206	920 FNL, 780 FWL	25	14S	09E
Prettyman 10-15-34	4300730211	842 FSL, 1419 FEL	10	14S	09E
Utah 10-36	4300730302	1213 FNL, 469 FEL	10	15S	09E
Utah 12-15-37	4300730210	1158 FSL, 1494 FEL	12	15S	09E
Utah 06-38	4300730217	899 FNL, 1730 FEL	6	15S	10E
Utah 06-39	4300730218	934 FNL, 819 FWL	6	15S	10E
Utah 06-40	4300730219	2180 FSL, 1780 FEL	6	15S	10E
Utah 06-41	4300730254	2124 FSL, 1054 FWL	6	15S	10E
Utah 01-42	4300730220	860 FNL, 1780 FEL	1	15S	09E
Utah 01-43	4300730221	808 FNL, 1451 FWL	1	15S	09E
Utah 01-44	4300730222	860 FSL, 1320 FWL	1	15S	09E
Utah 01-45	4300730223	1219 FSL, 1318 FEL	1	15S	09E
Utah 02-46	4300730224	860 FNL, 860 FEL	2	15S	09E

Utah 02-47	4300730225	1318 FNL, 1791 FWL	2	15S	09E
Utah 02-48	4300730226	1780 FSL, 860 FEL	2	15S	09E
Utah 02-49	4300730227	1320 FSL, 2080 FWL	2	15S	09E
Utah 11-50	4300730228	860 FNL, 860 FEL	11	15S	09E
Utah 11-51	4300730229	1000 FNL, 1900 FWL	11	15S	09E
Utah 11-52	4300730230	1400 FSL, 1100 FEL	11	15S	09E
Utah 11-53	4300730231	1780 FSL, 1800 FWL	11	15S	09E
Utah 12-54	4300730232	875 FNL, 1015 FWL	12	15S	09E
Utah 12-55	4300730233	1500 FNL, 1320 FEL	12	15S	09E
Utah 12-56	4300730234	1500 FSL, 1320 FWL	12	15S	09E
Utah 07-57	4300730235	1421 FNL, 1003 FWL	7	15S	10E
Utah 07-58	4300730236	1495 FNL, 2006 FEL	7	15S	10E
Utah 07-59	4300730237	1400 FSL, 2100 FEL	7	15S	10E
Utah 07-60	4300730238	954 FSL, 1256 FWL	7	15S	10E
Utah 14-61	4300730239	1386 FNL, 931 FEL	14	15S	09E
Utah 14-62	4300730240	980 FNL, 1385 FWL	14	15S	09E
Utah 14-63	4300730241	1780 FSL, 1320 FEL	14	15S	09E
Utah 14-64	4300730242	907 FSL, 1392 FWL	14	15S	09E
Utah 13-65	4300730243	1320 FNL, 1200 FEL	13	15S	09E
Utah 13-66	4300730244	1276 FNL, 1301 FWL	13	15S	09E
Utah 13-67	4300730245	1800 FSL, 1500 FEL	13	15S	09E
Utah 13-68	4300730246	1320 FSL, 1320 FWL	13	15S	09E
Utah 18-69	4300730427	1320 FNL, 1320 FWL	18	15S	10E
Utah 18-70	4300730248	1110 FNL, 2127 FEL	18	15S	10E
Utah 18-71	4300730249	1764 FSL, 1767 FEL	18	15S	10E
Utah 18-72	4300730250	2100 FSL, 1100 FWL	18	15S	10E
USA 19-73	4300730392	1664 FNL, 1412 FEL	19	15S	10E
Utah 14-74	4300730529	1365 FSL, 1988 FEL	14	14S	09E
Utah 14-75	4300730263	1036 FSL, 1622 FWL	14	14S	09E
Utah 22-76	4300730251	1320 FNL, 660 FEL	22	14S	09E
Utah 19-77	4300730252	1780 FSL, 660 FWL	19	14S	10E
Williams 30-78	4300730279	460 FNL, 660 FEL	30	14S	10E
Utah 31-79	4300730253	1780 FSL, 1780 FEL	31	14S	10E
Utah 24-80	4300730255	590 FNL, 1612 FWL	24	15S	09E
Utah 24-81	4300730256	1067 FNL, 1361 FEL	24	15S	09E
Utah 32-82	4300730257	600 FNL, 2028 FEL	32	15S	09E
Utah 21-83	4300730259	1780 FNL, 460 FWL	21	15S	10E
H&A 07-84	4300730258	1780 FSL, 1780 FWL	7	15S	09E
Utah 27-85	4300730261	2173 FNL, 676 FWL	27	14S	08E
Utah 24-86	4300730267	1788 FSL, 1677 FEL	24	15S	09E
Utah 24-87	4300730375	1780 FSL, 1333 FWL	24	15S	09E
USA 15-88	4300730264	872 FSL, 875 FEL	15	14S	09E
Telonis 22-89	4300730266	836 FNL, 1766 FWL	22	14S	09E
Telonis 21-90	4300730328	1272 FNL, 1188 FEL	21	14S	09E
USA 13-91	4300730568	1443 FSL, 1017 FWL	13	14S	09E
Utah 13-92	4300730439	624 FSL, 899 FEL	13	14S	09E
Utah 18-93	4300730587	556 FSL, 673 FWL	18	14S	10E
Utah 05-95	4300730269	640 FNL, 580 FWL	5	15S	10E
Utah 05-94	4300730270	1520 FSL, 1320 FWL	5	15S	10E

Utah 05-96	4300730271	1780 FSL, 2180 FEL	5	15S	10E
Utah 08-97	4300730272	1495 FNL, 1273 FEL	8	15S	10E
Utah 08-98X	4300730285	1341 FNL, 1319 FWL	8	15S	10E
Utah 08-99	4300730274	1500 FSL, 1120 FWL	8	15S	10E
Utah 08-100	4300730275	1500 FSL, 1400 FEL	8	15S	10E
Utah 17-101	4300730416	460 FNL, 2180 FEL	17	15S	10E
Utah 17-102	4300730277	810 FNL, 910 FWL	17	15S	10E
Utah 17-103	4300730278	1520 FSL, 1120 FWL	17	15S	10E
Powell 19-104	4300730282	1327 FNL, 1458 FWL	19	15S	10E
Powell 19-105	4300730283	1239 FSL, 1325 FWL	19	15S	10E
Utah 23-106	4300730280	150 FNL, 1400 FEL	23	15S	09E
Utah 23-107	4300730281	1252 FNL, 1255 FWL	23	15S	09E
Birkinshaw 19-108	4300730284	1305 FNL, 1192 FEL	19	15S	09E
Utah 36-109	4300730268	1800 FNL, 1800 FWL	36	15S	09E
Utah 16-110	4301530250	860 FSL, 2000 FWL	16	16S	09E
Fausett 09-111	4300730428	2215 FSL, 354 FEL	9	14S	09E
Fausett 10-112	4300730415	1590 FSL, 1342 FWL	10	14S	09E
Giacoletto 11-113	4300730335	500 FSL, 2070 FWL	11	14S	09E
Prettyman 11-114	4300730340	471 FSL, 1828 FEL	11	14S	09E
Giacoletto 13-120	4300730407	1200 FNL, 1219 FWL	13	14S	09E
Giacoletto 14-121	4300730345	1200 FNL, 1060 FEL	14	14S	09E
USA 14-122	4300730404	1500 FNL, 1039 FWL	14	14S	09E
Utah 30-125	4300730262	630 FSL, 1627 FEL	30	14S	10E
Utah 31-126	4300730305	1954 FNL, 1291 FEL	31	14S	10E
Robertson 32-127	4300730374	646 FNL, 349 FWL	32	14S	10E
Utah 04-129	4300730309	700 FWL, 1850 FSL	4	15S	10E
Utah 04-130	4300730519	860 FSL, 2150 FEL	4	15S	10E
Sampinos 16-131	4300730610	1201 FNL, 1016 FWL	16	15S	10E
Jensen 16-132	4300730588	1206 FSL, 1240 FWL	16	15S	10E
LDS 17-133	4300730296	1500 FSL, 1700 FEL	17	15S	10E
Utah 25-134	4300730399	745 FNL, 1482 FWL	25	15S	09E
Utah 36-135	4300730341	850 FNL, 850 FEL	36	15S	09E
Utah 36-136	4300730343	465 FSL, 660 FWL	36	15S	09E
Utah 36-137	4300730342	2180 FSL, 1800 FEL	36	15S	09E
Utah 02-138	4301530288	638 FNL, 1865 FEL	2	16S	09E
Utah 02-139	4301530289	1890 FNL, 850 FWL	2	16S	09E
Utah 02-140	4301530290	850 FSL, 1800 FWL	2	16S	09E
Utah 02-141	4301530291	1800 FSL, 1950 FEL	2	16S	09E
Telonis 15-142	4300730319	1320 FSL, 860 FWL	15	14S	09E
Fausett 16-143	4300730320	1320 FNL, 1320 FEL	16	14S	09E
Fausett 16-144	4300730321	1800 FNL, 860 FWL	16	14S	09E
Telonis 16-145	4300730322	1320 FSL, 1320 FWL	16	14S	09E
Paar 16-146	4300730323	843 FSL, 2157 FEL	16	14S	09E
Christiansen 17-147	4300730324	860 FSL, 1800 FWL	17	14S	09E
Christiansen 17-148	4300730325	1250 FSL, 1100 FEL	17	14S	09E
Birkinshaw 18-149	4300730326	500 FSL, 500 FEL	18	14S	09E
Telonis 19-150	4300730300	751 FNL, 1840 FWL	19	14S	09E
Telonis 19-151	4300730299	860 FSL, 2000 FWL	19	14S	09E
Telonis 20-152	4300730327	1320 FNL, 1900 FEL	20	14S	09E

Telonis 21-153	4300730329	860 FNL, 1800 FWL	21	14S	09E
Telonis 29-154	4300730330	800 FNL, 1500 FWL	29	14S	09E
Telonis 29-155	4300730331	1800 FSL, 1250 FWL	29	14S	09E
Telonis 30-156	4300730301	910 FNL, 868 FEL	30	14S	09E
Telonis 30-157	4300730332	1800 FSL, 580 FEL	30	14S	09E
Utah 32-158	4300730333	1038 FNL, 1768 FEL	32	14S	09E
Utah 32-159	4300730334	2011 FNL, 1426 FWL	32	14S	09E
Utah 32-160	4300730398	1500 FSL, 1780 FWL	32	14S	09E
Utah 32-161	4300730336	415 FSL, 1408 FEL	32	14S	09E
Utah 36-162	4300730315	2053 FNL, 685 FEL	36	14S	08E
Utah 36-163	4300730316	860 FNL, 2100 FWL	36	14S	08E
Utah 36-164	4300730317	1070 FSL, 2000 FWL	36	14S	08E
Utah 36-165	4300730318	1100 FSL, 1500 FEL	36	14S	08E
Utah 02-166	4300730337	1219 FNL, 1738 FEL	2	15S	08E
Utah 02-167	4300730338	660 FNL, 2075 FWL	2	15S	08E
Utah 02-168	4300730339	1800 FSL, 2100 FWL	2	15S	08E
Utah 02-169	4300730308	754 FSL, 1000 FEL	2	15S	08E
Seamons 32-170	4300730291	700 FNL, 500 FWL	32	13S	09E
Pinnacle Peak 19-171	4300730117	1320 FSL, 1320 FEL	19	14S	09E
Telonis 20-172	4300730107	1980 FSL, 660 FEL	20	14S	09E
Powell 30-173	4300730346	1200 FNL, 1200 FWL	30	15S	10E
Stella-Hamaker 10-174	4300730116	852 FNL, 1971 FWL	10	15S	08E
Utah 31-175	4301530317	897 FNL, 1731 FWL	31	16S	09E
USA 15-176	4300730450	2588 FNL, 1155 FEL	15	14S	09E
USA 09-178	4300730419	428 FSL, 2527 FWL	9	14S	09E
USA 17-180A	4300730622	2563 FNL, 1383 FWL	17	14S	09E
USA 18-182	4300730417	1068 FSL, 1972 FWL	18	14S	09E
USA 24-183	4300730469	828 FNL, 624 FEL	24	14S	08E
Utah 27-187	4300730395	1400 FNL, 1400 FWL	27	14S	09E
Utah 27-188	4300730292	477 FSL, 518 FWL	27	14S	09E
Utah 28-189	4300730396	1707 FNL, 868 FEL	28	14S	09E
Utah 28-190	4300730397	1969 FNL, 1324 FWL	28	14S	09E
Utah 28-191	4300730293	693 FSL, 1623 FWL	28	14S	09E
Utah 28-192	4300730294	1407 FNL, 1940 FWL	28	14S	09E
Utah 29-193	4300730405	693 FNL, 1029 FEL	29	14S	09E
Utah 29-194	4300730427	951 FSL, 370 FEL	29	14S	09E
Utah 30-195	4300730265	1407 FNL, 1940 FWL	30	14S	09E
Utah 30-196	4300730344	1056 FSL, 1984 FWL	30	14S	09E
Kakatsidas 31-197	4300730420	619 FNL, 1361 FEL	31	14S	09E
Utah 31-198	4300730406	1403 FNL, 1540 FWL	31	14S	09E
Utah 31-199	4300730480	1125 FSL, 928 FWL	31	14S	09E
Utah 31-200	4300730385	2118 FSL, 549 FEL	31	14S	09E
Utah 33-201	4300730386	317 FNL, 1815 FEL	33	14S	09E
Utah 33-202	4300730387	1939 FNL, 1593 FWL	33	14S	09E
Utah 33-203	4300730388	1373 FSL, 1140 FWL	33	14S	09E
Utah 33-204	4300730389	2024 FSL, 1525 FEL	33	14S	09E
Utah 05-205	4300730384	1485 FNL, 760 FEL	5	15S	09E
Utah 05-206	4300730390	1300 FNL, 1352 FWL	5	15S	09E
Utah 06-207	4300730391	825 FNL, 928 FEL	6	15S	08E

Utah 01-208	4300730464	1246 FNL, 1831 FEL	1	15S	09E
Utah 01-209	4300730467	2271 FSL, 1251 FEL	1	15S	09E
Utah 34-211	4300730114	1181 FSL, 1005 FWL	34	14S	09E
Utah 03-212	4300730468	1187 FNL, 1761 FEL	3	15S	09E
Utah 03-213	4300730381	1466 FNL, 2041 FWL	3	15S	09E
Utah 03-214	4300730295	813 FSL, 966 FWL	3	15S	09E
Utah 03-215	4300730297	988 FSL, 604 FEL	3	15S	09E
Utah 04-216	4300730382	1610 FNL, 810 FEL	4	15S	09E
Utah 04-217	4300730383	1343 FNL, 1119 FWL	4	15S	09E
Utah 04-218	4300730418	1084 FSL, 509 FEL	4	15S	09E
Utah 10-219	4300730298	805 FNL, 756 FWL	10	15S	09E
Utah 10-220	4300730432	474 FSL, 372 FWL	10	15S	09E
Utah 10-221	4300730303	1602 FSL, 2032 FEL	10	15S	09E
USA 19-222	4300730393	1574 FSL, 1647 FEL	19	15S	10E
Utah 06-223	4300730430	1636 FSL, 1085 FEL	6	15S	09E
Utah 05-225	4300730440	421 FSL, 498 FEL	5	15S	09E
Utah 04-226	4300730408	571 FSL, 2331 FWL	4	15S	09E
Utah 09-227	4300730449	652 FNL, 1331 FEL	9	15S	09E
Utah 09-228	4300730413	1444 FNL, 1520 FWL	9	15S	09E
Utah 09-229	4300730414	1595 FSL, 2051 FWL	9	15S	09E
Utah 08-230	4300730410	2003 FNL, 960 FEL	8	15S	09E
Utah 08-231	4300730411	1321 FNL, 1738 FWL	8	15S	09E
H&A 08-232	4300730412	1135 FSL, 1497 FWL	8	15S	09E
Utah 08-233	4300730488	468 FSL, 2030 FEL	8	15S	09E
Utah 07-234	4300730409	1876 FNL, 875 FEL	7	15S	09E
Utah 07-235	4300730421	2098 FSL, 510 FEL	7	15S	09E
H&A 18-236	4300730459	896 FNL, 1511 FEL	18	15S	09E
Utah 18-237	4300730485	1867 FSL, 1920 FEL	18	15S	09E
Utah 17-238	4300730510	677 FNL, 1321 FEL	17	15S	09E
Utah 17-239	4300730511	1383 FNL, 1576 FWL	17	15S	09E
Utah 17-240	4300730512	1977 FSL, 1394 FWL	17	15S	09E
Utah 17-241	4300730513	1668 FSL, 2222 FEL	17	15S	08E
USA 12-242	4300730482	1738 FNL, 1505 FEL	12	15S	08E
USA 12-243	4300730486	950 FNL, 232 FWL	12	15S	08E
USA 11-244	4300730463	1151 FNL, 1690 FEL	11	15S	08E
USA 11-245	4300730462	1234 FNL, 1743 FWL	11	15S	08E
Utah 01-246	4300730566	1619 FNL, 170 FWL	1	15S	09E
Utah 01-247	4300730465	594 FSL, 266 FWL	1	15S	08E
USA 35-248	4300730582	828 FSL, 1245 FEL	35	15S	09E
USA 30-251	4300730403	1169 FSL, 913 FWL	30	15S	10E
Utah 25-252	4300730400	1937 FNL, 1416 FEL	25	15S	09E
Utah 25-253	4300730401	809 FSL, 899 FWL	25	15S	09E
Utah 25-254	4300730402	1787 FSL, 1954 FEL	25	15S	09E
Utah 26-255	4300730446	1209 FNL, 755 FEL	26	15S	09E
Utah 26-256	4300730445	1274 FSL, 1351 FWL	26	15S	09E
Utah 26-257	4300730444	1263 FSL, 1368 FEL	26	15S	09E
Utah 34-258	4300730552	1198 FNL, 1880 FEL	34	15S	09E
Utah 34-259	4300730456	1662 FSL, 2046 FEL	34	15S	09E
Utah 35-260	4300730447	814 FNL, 1900 FEL	35	15S	09E

Utah 35-261	4300730442	615 FNL, 818 FWL	35	15S	09E
Utah 35-262	4300730443	1657 FSL, 1850 FWL	35	15S	09E
Utah 35-263	4300730441	1785 FSL, 946 FEL	35	15S	09E
USA 01-264	4301530336	1055 FNL, 441 FWL	1	16S	09E
USA 01-265	4301530337	1739 FSL, 636 FWL	1	16S	09E
Woolstenhulme 05-266	4300730481	1389 FNL, 2179 FEL	5	15S	10E
Utah 26-267	4300730514	1836 FNL, 2130 FWL	26	15S	09E
Utah 27-268	4300730457	1125 FSL, 1682 FWL	26	15S	09E
Utah 27-269	4300730458	1661 FSL, 795 FEL	27	15S	09E
Utah 34-270	4300730347	774 FNL, 756 FWL	34	15S	09E
Utah 34-271	4300730496	1693 FSL, 965 FWL	34	15S	09E
Utah 33-272	4300730502	694 FNL, 2034 FEL	33	15S	09E
Utah 33-273	4300730493	1922 FNL, 328 FWL	33	15S	09E
Utah 33-274	4300730494	1098 FSL, 1673 FWL	33	15S	09E
Utah 33-275	4300730495	1401 FSL, 1029 FEL	33	15S	09E
Utah 32-276	4300730483	738 FL, 1318 FWL	32	15S	09E
Utah 32-277	4300730484	1613 FSL, 1931 FEL	32	15S	09E
Utah 05-278	4301530278	1665 FNL, 1923 FEL	5	15S	09E
Utah 04-279	4301530340	1020 FNL, 1757 FEL	4	16S	09E
Utah 04-280	4301530341	2087 FNL, 1627 FWL	4	16S	09E
Utah 04-281	4301530399	999 FSL, 896 FWL	4	16S	09E
Utah 04-282	4301530342	2188 FSL, 911 FEL	4	16S	09E
Utah 03-283	4301530349	461 FNL, 1772 FEL	3	16S	09E
Utah 03-284	4301530346	1218 FNL, 753 FWL	3	16S	09E
Utah 03-285	4301530345	1917 FSL, 546 FWL	3	16S	09E
Utah 03-286	4301530344	1690 FSL, 1958 FEL	3	16S	09E
USA 20-287	4300730448	1395 FNL, 979 FWL	20	15S	10E
USA 20-288	4300730451	1566 FSL, 1125 FWL	20	15S	10E
USA 30-289	4300730452	1184 FNL, 1353 FEL	30	15S	10E
USA 30-290	4300730453	1080 FSL, 1508 FEL	30	14S	10E
USA 11-291	4300730501	2609 FNL, 1994 FEL	11	14S	09E
USA 11-292	4300730500	2483 FNL, 664 FWL	11	14S	09E
USA 10-293	4300730498	2011 FNL, 847 FEL	10	14S	09E
USA 10-294	4300730497	1750 FNL, 769 FWL	10	14S	09E
USA 09-295	4300730499	696 FNL, 1198 FEL	9	14S	09E
Fausett 09-296	4300730455	2072 FNL, 798 FWL	9	14S	09E
USA 08-297	4300730491	789 FNL, 958 FEL	8	14S	09E
Ritzakis 08-298	4300730475	798 FNL, 2018 FWL	8	14S	09E
Ritzakis 08-299	4300730479	2187 FSL, 1885 FWL	8	14S	09E
Ritzakis 08-300	4300730476	2485 FSL, 1522 FEL	8	14S	09E
USA 04-302	4300730489	1076 FSL, 1860 FWL	4	14S	09E
USA 04-303	4300730490	597 FSL, 984 FEL	4	14S	09E
Ritzakis 05-304	4300730473	688 FSL, 1888 FWL	5	14S	09E
Ritzakis 05-305	4300730474	1104 FSL, 1196 FEL	5	14S	09E
USA 06-306	4300730492	399 FSL, 306 FEL	6	14S	09E
Helper 07-307	4300730487	672 FNL, 962 FWL	7	15S	09E
USA 31-310	4300730516	624 FNL, 1238 FWL	31	15S	10E
USA 31-311	4300730517	1934 FSL, 973 FWL	31	15S	10E
USA 01-312	4301530350	1453 FNL, 1881 FEL	1	16S	09E

USA 11-314	4301530353	1262 FNL, 1136 FWL	11	16S	09E
USA 10-317	4301530352	1221 FNL, 1104 FEL	10	16S	09E
USA 12-322	4300730576	492 FSL, 495 FWL	10	15S	08E
USA 12-323	4300730577	540 FSL, 784 FEL	12	15S	08E
USA 11-324	4300730575	732 FSL, 1763 FEL	11	15S	08E
USA 14-325	4300730579	890 FNL, 1469 FEL	14	15S	08E
USA 13-326	4300730581	1065 FNL, 1563 FEL	13	15S	08E
USA 13-327	4300730578	1092 FNL, 941 FWL	13	15S	08E
USA 35-328	4300730583	964 FSL, 1999 FWL	35	14S	08E
Utah 09-329	4300730561	884 FSL, 1324 FEL	9	15S	09E
Utah 06-330	4300730562	938 FNL, 1564 FWL	6	15S	09E
Utah 20-333	4300730669	1069 FNL, 1460 FEL	20	15S	09E
Utah 20-334	4300730625	932 FNL, 1655 FWL	20	15S	09E
Utah 20-335	4300730626	2152 FSL, 1716 FWL	20	15S	09E
Utah 19-337	4300730623	926 FNL, 768 FEL	19	15S	09E
Utah 19-338	4300730624	1789 FSL, 1426 FEL	19	15S	09E
Utah 05-343	4301530400	1795 FNL, 1431 FWL	5	16S	09E
Utah 05-344	4301530401	1316 FSL, 1343 FWL	5	16S	09E
Utah 05-345	4301530402	908 FSL, 1449 FEL	5	16S	09E
Utah 08-354	4301530395	1073 FNL, 1914 FEL	8	16S	09E
Utah 08-355	4301530378	1673 FNL, 850 FWL	8	16S	09E
Utah 08-356	4301530379	1701 FSL, 799 FWL	8	16S	09E
Utah 08-357	4301530380	1722 FSL, 1599 FEL	8	16S	09E
Utah 09-358	4301530300	2097 FNL, 1634 FEL	9	16S	09E
Utah 09-359	4301530407	1787 FNL, 871 FWL	9	16S	09E
Utah 09-360	4301530397	1323 FSL, 881 FWL	9	16S	09E
Utah 09-361	4301530408	1564 FSL, 1998 FEL	9	16S	09E
USA 10-362	4301530424	2225 FNL, 494 FWL	10	16S	09E
USA 14-386	4300730634	592 FNL, 2236 FWL	14	15S	08E
USA 24-387	4300730612	1243 FSL, 2306 FWL	10	14S	08E
USA 24-388	4300730613	1177 FSL, 612 FEL	24	14S	08E
Utah 25-389	4300730600	737 FNL, 1976 FEL	25	14S	08E
Utah 25-390	4300730599	1540 FNL, 1354 FWL	25	14S	08E
Utah 25-391A	4300730658	1264 FSL, 1573 FWL	25	14S	08E
Utah 25-392	4300730602	2045 FSL, 1718 FEL	25	14S	09E
USA 26-393	4300730614	1666 FNL, 874 FEL	26	14S	08E
USA 26-394	4300730615	856 FSL, 2377 FWL	26	14S	08E
USA 26-395	4300730616	1927 FSL, 830 FEL	26	14S	08E
USA 35-396	4300730584	616 FNL, 1896 FEL	35	14S	08E
USA 35-397	4300730585	949 FNL, 1264 FWL	35	14S	08E
USA 20-398	4300730590	1374 FNL, 1387 FEL	20	15S	10E
USA 20-399	4300730591	1445 FSL, 1128 FEL	20	15S	10E
Utah 09-412	4300730580	1102 FSL, 1018 FWL	9	15S	10E
Utah 09-413	4300730605	1007 FNL, 1197 FWL	9	15S	10E
Utah 10-415	4301530391	1090 FNL, 557 FEL	10	16S	08E
USA 14-416	4300730646	892 FSL, 1311 FWL	14	15S	08E
USA 14-417	4300730647	1741 FSL, 1054 FEL	14	15S	09E
USA 13-418	4300730645	737 FSL, 793 FEL	13	15S	08E
USA 13-419	4300730631	2617 FSL, 1958 FEL	13	15S	08E

USA 23-423	4300730611	408 FSL, 924 FEL	23	14S	08E
USA 34-434	4300730621	1342 FSL, 922 FEL	34	14S	08E
USA 18-435	4300730619	1868 FNL, 793 FWL	18	14S	09E
USA 07-436	4300730630	3121 FNL, 871 FEL	7	14S	09E
USA 03-442	4300730710	899 FNL, 553 FEL	3	15S	08E
USA 24-443	4300730651	1780 FNL, 2247 FEL	24	15S	08E
USA 24-444	4300730648	1338 FNL, 1153 FWL	24	15S	08E
USA 24-446	4300730708	1377 FNL, 2340 FWL	24	14S	08E
USA 13-447	4300730707	2044 FSL, 741 FEL	13	14S	08E
USA 24-448	4300730652	2146 FSL, 2021 FEL	24	15S	08E
Utah 34-456	4300730713	755 FNL, 1377 FEL	34	14S	08E
USA 13-470	4300730706	1741 FNL, 554 FEL	13	14S	08E
Utah 06-483	4300730716	2456 FSL, 988 FWL	6	15S	09E
American Quasar D1	4300730040	999 FSL, 1552 FWL	31	14S	10E
Arcadia-Telonis D2	4300730093	465 FSL, 560 FEL	19	14S	09E
Utah D3	4300730290	1600 FSL, 1530 FEL	18	15S	10E
Utah D4	4300730314	600 FNL, 500 FWL	24	14S	09E
Fausett D5	4300730351	467 FNL, 1461 FWL	16	14S	09E
Drew D6	4300730100	1300 FSL, 830 FWL	34	14S	09E
Utah D7	4301530338	1371 FSL, 1530 FEL	2	14S	09E
Utah D8	4300730431	1342 FNL, 350 FWL	12	15S	09E
Utah D9	4300730438	1960 FNL, 1487 FWL	32	14S	09E
RGC D10	4300730520	162 FNL, 1557 FEL	28	15S	09E
USA D11	4301530356	1513 FNL, 2437 FEL	13	16S	09E
Sampinos D14	4300730567	1695 FSL, 2133 FEL	16	15S	10E

LAW OFFICES
PRUITT, GUSHEE & BACHTELL
SUITE 1850 BENEFICIAL LIFE TOWER
SALT LAKE CITY, UTAH 84111-1495
(801) 531-8446
TELECOPIER (801) 531-8468
E-MAIL: mail@pgblaw.com

THOMAS W BACHTELL
A JOHN DAVIS, III
JOHN W ANDERSON
FREDERICK M MACDONALD
GEORGE S YOUNG
ANGELA L FRANKLIN
JOHN S FLITTON
MICHAEL S JOHNSON
WILLIAM E WARD

SENIOR COUNSEL:
ROBERT G PRUITT, JR
OLIVER W GUSHEE, JR

OF COUNSEL:
ROBERT G PRUITT, III
BRENT A BOHMAN

January 29, 2001

HAND DELIVERED

Mr. Jim Thompson
Utah Division of Oil, Gas & Mining
1594 W. North Temple
Salt Lake City, UT 84116

Re: River Gas/Phillips Merger

Dear Mr. Thompson:

As you may know, River Gas Corporation ("RGC") merged into Phillips Petroleum Company ("Phillips") effective December 31, 2000 at 11:59 p.m. I have enclosed a Certificate of Articles of Merger issued by the Utah Department of Commerce and, although duplicative, a sundry notice formally evidencing the merger for your records, and a list of all wells, including injection wells, formerly operated by RGC.

Please change the Division's records to reflect the change in operator of these wells from RGC to Phillips. All operational questions should be directed to Phillips at the following address:

Phillips Petroleum Company
Attn: Billy Stacy, Operations Manager
P.O. Box 3368
Englewood, CO 80155-3368
Telephone No.: (720) 344-4984

Phillips currently has a bond on file with the Division (a copy of which is enclosed for your reference), but I understand an $80,000 Letter of Credit is in the process of being substituted.

On behalf of Phillips, I thank you for your cooperation. Should you have any further questions or concerns, please do not hesitate to contact me.

Yours very truly,

Frederick M. MacDonald

FMM:cs
2078.16
Enclosures
cc: W. H. Rainbolt
Billy Stacy

Utah Department of Commerce
Division of Corporations & Commercial Code
160 East 300 South, 2nd Floor, Box 146705
Salt Lake City, UT 84114-6705
Phone: (801) 530-4849
Toll Free: (877) 526-3994 Utah Residents
Fax: (801) 530-6438
Web site: http://www.commerce.state.ut.us

Registration Number: 562960-0143 01/12/01
Business Name: PHILLIPS PETROLEUM COMPANY
Registered Date: JUNE 14, 1946

CERTIFICATE OF ARTICLES OF MERGER

THE UTAH DIVISION OF CORPORATIONS AND COMMERCIAL CODE ("DIVISION") HEREBY CERTIFIES THAT

ARTICLES OF MERGER WERE FILED WITH THIS OFFICE ON DECEMBER 12, 2000 MERGING RIVER GAS CORPORATION, A CORPORATION OF THE STATE OF ALABAMA, INTO PHILLIPS PETROLEUM COMPANY, THE SURVIVING CORPORATION WHICH IS OF THE STATE OF DELAWARE, AS APPEARS OF RECORD IN THE OFFICE OF THE DIVISION.

Ric Campbell
Acting Division Director of
Corporations and Commercial Code

00171151

State of Delaware

Office of the Secretary of State

Date: 12/13/2000
Receipt Number: 188532
Amount Paid: $145.00

I, EDWARD J. FREEL, SECRETARY OF STATE OF THE STATE OF DELAWARE, DO HEREBY CERTIFY THE ATTACHED IS A TRUE AND CORRECT COPY OF THE CERTIFICATE OF OWNERSHIP, WHICH MERGES:

"RIVER GAS CORPORATION", A ALABAMA CORPORATION,

WITH AND INTO "PHILLIPS PETROLEUM COMPANY" UNDER THE NAME OF "PHILLIPS PETROLEUM COMPANY", A CORPORATION ORGANIZED AND EXISTING UNDER THE LAWS OF THE STATE OF DELAWARE, AS RECEIVED AND FILED IN THIS OFFICE THE SIXTH DAY OF DECEMBER, A.D. 2000, AT 10 O'CLOCK A.M.

AND I DO HEREBY FURTHER CERTIFY THAT THE EFFECTIVE DATE OF THE AFORESAID CERTIFICATE OF OWNERSHIP IS THE THIRTY-FIRST DAY OF DECEMBER, A.D. 2000, AT 11:59 O'CLOCK A.M.

A FILED COPY OF THIS CERTIFICATE HAS BEEN FORWARDED TO THE NEW CASTLE COUNTY RECORDER OF DEEDS.

12-12-00P04:02 RCVD

State of Utah
Department of Commerce
Division of Corporations and Commercial Code
I Hereby certify that the foregoing has been filed and approved on this 12 day of Dec 20 00 in the office of this Division and hereby issue this Certificate thereof.

Examiner _____ Date 12/05/00

RIC CAMPBELL
ACTING DIRECTOR

TAB
FILED
DEC 12 2000
Utah Div. Of Corp. & Comm. Code

Edward J. Freel, Secretary of State

0064324 8100M

AUTHENTICATION: 0837738

001609453

DATE: 12-07-00

STATE OF DELAWARE
SECRETARY OF STATE
DIVISION OF CORPORATIONS
FILED 10:00 AM 12/06/2000
001609453 - 0064324

CERTIFICATE OF OWNERSHIP AND MERGER

OF

RIVER GAS CORPORATION

(an Alabama corporation)

into

Phillips Petroleum Company

(a Delaware corporation)

It is hereby certified that:

1. Phillips Petroleum Company [hereinafter sometimes referred to as the "Corporation"] is a business corporation of the State of Delaware.

2. The Corporation is the owner of all of the outstanding shares of each class of stock of River Gas Corporation, which is a business corporation of the State of Alabama.

3. The laws of the jurisdiction of organization of River Gas Corporation permit the merger of a business corporation of that jurisdiction with a business corporation of another jurisdiction.

4. The Corporation hereby merges River Gas Corporation into the Corporation.

5. The following is a copy of the resolutions adopted on November 21, 2000 by the Board of Directors of the Corporation to merge the said River Gas Corporation into the Corporation:

> "1. Phillips Petroleum Company, which is a business corporation of the State of Delaware and is the owner of all of the outstanding shares of River Gas Corporation, which is a business corporation of the State of Alabama, hereby merges River Gas Corporation into Phillips Petroleum Company pursuant to the provisions of the Alabama Business Corporation Act and pursuant to the

12-12-00P04:02 RCVD

provisions of Section 253 of the General Corporation Law of Delaware.

"2. The separate existence of River Gas Corporation shall cease at the effective time and date of the merger pursuant to the provisions of the Alabama Business Corporation Act; and Phillips Petroleum Company shall continue its existence as the surviving corporation pursuant to the provisions of Section 253 of the General Corporation Law of Delaware.

"3. The Articles of Incorporation of Phillips Petroleum Company are not amended in any respect by this Plan of Merger.

"4. The issued shares of River Gas Corporation shall not be converted or exchanged in any manner, but each said share which is issued immediately prior to the effective time and date of the merger shall be surrendered and extinguished.

"5. Each share of Phillips Petroleum Company outstanding immediately prior to the effective time and date of the merger is to be an identical outstanding share of Phillips Petroleum Company at the effective time and date of the merger.

"6. No shares of Phillips Petroleum Company and no shares, securities, or obligations convertible into such shares are to be issued or delivered under this Plan of Merger.

"7. The Board of Directors and the proper officers of Phillips Petroleum Company are hereby authorized, empowered, and directed to do any and all acts and things, and to make, execute, deliver, file, and/or record any and all instruments, papers, and documents which shall be or become necessary, proper, or convenient to carry out or put into effect any of the provisions of this Plan of Merger or of the merger herein provided for. "

" This Company approves that the effective time and date of the merger herein provided for in the State of Alabama shall be 11:59 p.m. on December 31, 2000."

"Any Vice President, the Treasurer, any Assistant Treasurer, the Secretary, any Assistant Secretary, and each of them severally, be and hereby is authorized to make, execute,

deliver, file, and/or record any and all instruments, papers, and documents which shall be or become necessary, proper, or convenient to carry out or put into effect any of the provisions of these resolutions and to do or cause to be done all such acts as are necessary to give effect to the purpose and intent of the approval herein set forth."

6. This Certificate of Ownership and Merger shall be effective at 11:59 p.m. on December 31, 2000.

Executed on November 27, 2000

Phillips Petroleum Company

N. A. Loftis

N. A. Loftis, Assistant Secretary

United States Department of the Interior

BUREAU OF LAND MANAGEMENT
Utah State Office
P.O. Box 45155
Salt Lake City, UT 84145-0155

In Reply Refer To:
3106
UTU-47157 et al
(UT-932)

JAN 30 2001

NOTICE

Phillips Petroleum Company	:	Oil and Gas
Attn: W. H. Rainbolt, Rocky Mtn. Region-Land	:	
Box 1967	:	
Houston, TX 77251-1967	:	

Merger Recognized

Acceptable evidence has been filed in this office concerning the merger of River Gas Corporation into Phillips Petroleum Company with Phillips Petroleum Company being the surviving entity.

The oil and gas lease files and rights-of-way files identified on the enclosed exhibit have been noted as to the merger. The exhibit is the list supplied by the representative of the companies, and verified by our computerized records. We have not adjudicated the case files to determine if the entity affected by the merger holds an interest in the leases identified, nor have we attempted to identify leases where the entity is the operator on the ground, maintaining no vested record title or operating rights interest. We are notifying the Minerals Management Service and all applicable BLM offices of the merger by a copy of this notice. If additional documentation for a change of operator is required by our Field Offices, you will be contacted by them.

By recognition of the merger the obligor is automatically changed by operation of law from River Gas Corporation to Phillips Petroleum Company on Letter of Credit No. P-207337 (BLM Bond No. UT0829). A rider to BLM Bond No. ES0048 assuming any and all liabilities of BLM Bond No. UT0829 must be submitted for approval to the Eastern States Office, Attn: Bill Forbes, 7450 Boston Boulevard, Springfield, VA 22153. After the rider is approved, the Letter of Credit will be returned to the financial institution that issued it.

ROBERT LOPEZ

Robert Lopez
Chief, Branch of
Minerals Adjudication

Enclosure
Exhibit of Leases

RECEIVED
FEB 02 2001
DIVISION OF
OIL, GAS AND MINING

cc: Moab Field Office
Vernal Field Office
Price Field Office
MMS–Reference Data Branch, MS 3130, P.O. Box 5860, Denver, CO 80217
State of Utah, DOGM, Attn: Jim Thompson (Ste. 1210), Box 145801, SLC, UT 84114
The Chase Manhattan Bank, Attn: Standby Letter of Credit Dept., 4 Chase Metrotech Center, 8th Floor
Brooklyn, NY 11245
Teresa Thompson (UT-931)
LaVerne Steah (UT-942)
Pruitt, Gushee & Bachtell, Attn: Frederick M. MacDonald, Suite 1850 Beneficial Life Tower,
Salt Lake City, Utah 84111-1495
BLM, Eastern States Office (Attn: Bill Forbes)

Division of Oil, Gas and Mining

OPERATOR CHANGE WORKSHEET

ROUTING

1. GLH	✓	4-KAS ✓
2. CDW ✓		5-~~SJ~~ ✓
3. JLT		6-FILE

Enter date after each listed item is completed

Change of Operator (Well Sold) — Designation of Agent

Operator Name Change (Only) — **X Merger**

The operator of the well(s) listed below has changed, effective: **12-31-2000**

FROM: (Old Operator):	**TO:** (New Operator):
RIVER GAS CORPORATION	PHILLIPS PETROLEUM COMPANY
Address: 6825 S. 5300 W. P. O. BOX 851	Address: P. O. BOX 3368
PRICE, UT 84501	ENGLEWOOD, CO 80155-3368
Phone: 1-(435)-613-9777	Phone: 1-(720)-344-4984
Account N1605	Account N1475

CA No. **Unit:** **DRUNKARDS WASH**

WELL(S)

NAME	API NO.	ENTITY NO.	SEC. TWN RNG	LEASE TYPE	WELL TYPE	WELL STATUS
UTAH 31-198	43-007-30406	11256	31-14S-09E	STATE	GW	P
UTAH 31-200	43-007-30385	11256	31-14S-09E	STATE	GW	P
KAKATSIDES 31-197	~~43-007-30420~~	~~11256~~	~~31-14S-09E~~	STATE	GW	P
UTAH 31-199	43-007-30480	11256	31-14S-09E	STATE	GW	P
UTAH 32-158	43-007-30333	11256	32-14S-09E	STATE	GW	P
UTAH 32-159	43-007-30334	11256	32-14S-09E	STATE	GW	P
UTAH 32-160	43-007-30398	11256	32-14S-09E	STATE	GW	P
UTAH 32-161	43-007-30336	11256	32-14S-09E	STATE	GW	P
UTAH 33-201	43-007-30386	11256	33-14S-09E	STATE	GW	P
UTAH 33-202	43-007-30387	11256	33-14S-09E	STATE	GW	P
UTAH 33-203	43-007-30388	11256	33-14S-09E	STATE	GW	P
UTAH 33-204	43-007-30389	11256	33-14S-09E	STATE	GW	P
UTAH 34-211	43-007-30114	11256	34-14S-09E	STATE	GW	P
UTAH 34-9-32	43-007-30195	11256	34-14S-09E	STATE	GW	P
UTAH 34-1-31	43-007-30196	11256	34-14S-09E	STATE	GW	P
UTAH 35-1-9	43-007-30180	11256	35-14S-09E	STATE	GW	P
UTAH 35-10-27	43-007-30197	11256	35-14S-09E	STATE	GW	P
UTAH 35-13-28	43-007-30198	11256	35-14S-09E	STATE	GW	P
UTAH 35-3-26	43-007-30203	11256	35-14S-09E	STATE	GW	P
UTAH 36-9-5	43-007-30144	11256	36-14S-09E	STATE	GW	P

OPERATOR CHANGES DOCUMENTATION

1. (R649-8-10) Sundry or legal documentation was received from the **FORMER** operator on: 01/29/2001
2. (R649-8-10) Sundry or legal documentation was received from the **NEW** operator on: 01/29/2001
3. The new company has been checked through the **Department of Commerce, Division of Corporations Database on:** 02/15/2001

4. Is the new operator registered in the State of Utah: YES Business Number: 562960-0143

5. If **NO**, the operator was contacted contacted on: _____

6. **Federal and Indian Lease Wells:** The BLM and or the BIA has approved the (merger, name change, or operator change for all wells listed on Federal or Indian leases on: 01/30/2001

7. **Federal and Indian Units:** The BLM or BIA has approved the successor of unit operator for wells listed on: N/A

8. **Federal and Indian Communization Agreements ("CA"):** The BLM or the BIA has approved the operator change for all wells listed involved in a CA on: N/A

9. **Underground Injection Control ("UIC") Pro** The Division has approved UIC Form 5, **Transfer of Authority to Inject,** for the enhanced/secondary recovery unit/project for the water disposal well(s) listed on: _____

DATA ENTRY:

1. Changes entered in the **Oil and Gas Database on:** 02/27/2001

2. Changes have been entered on the **Monthly Operator Change Spread Sheet on:** 02/27/2001

3. Bond information entered in RBDMS on: N/A

4. Fee wells attached to bond in RBDMS on: N/A

STATE BOND VERIFICATION:

1. State well(s) covered by Bond No.: ~~N/A~~ 5952189

FEE WELLS - BOND VERIFICATION/LEASE INTEREST OWNER NOTIFICATION:

1. (R649-3-1) The **NEW** operator of any fee well(s) listed has furnished a bond: N/A

2. The **FORMER** operator has requested a release of liability from their bond on: N/A
   The Division sent response by letter on: N/A

3. (R649-2-10) The **FORMER** operator of the Fee wells has been contacted and informed by a letter from the Division of their responsibility to notify all interest owners of this change on: N/A

FILMING:

1. All attachments to this form have been **MICROFILMED** on: 3-12-01

FILING:

1. **ORIGINALS/COPIES** of all attachments pertaining to each individual well have been filled in each well file on: _____

COMMENTS:

FORM 9

STATE OF UTAH

DIVISION OF OIL, GAS AND MINING

SUNDRY NOTICES AND REPORTS ON WELLS

Do not use this form for proposals to drill new wells, deepen existing wells, or to reenter plugged and abandoned wells. Use APPLICATION FOR PERMIT TO DRILL OR DEEPEN form for such proposals.

5. Lease Designation and Serial Number: Ml-48233

6. If Indian, Allottee or Tribe Name: N/A

7. Unit Agreement Name: UTU67921X Drunkards Wash

1. Type of Well: OIL ☐ GAS ☒ OTHER:

8. Well Name and Number: UT 31-199

2. Name of Operator: Phillips Petroleum Company

9. API Well Number: 43-007-30480

3. Address and Telephone Number: 6825 South 5300 West, P.O. Box 851, Price, UT 84501 (435) 613-9777

10. Field or Pool, or Wildcat: Drunkards Wash

4. Location of Well Footages: 1125' FSL & 928' FWL

QQ, Sec., T., R., M.: SW/SW, SEC.31, T14S, R09E, SLB & M

County: Carbon County

State: Utah

11. CHECK APPROPRIATE BOXES TO INDICATE NATURE OF NOTICE, REPORT, OR OTHER DATA

NOTICE OF INTENT
(Submit in Duplicate)

- ☐ Abandon
- ☐ Repair Casing
- ☐ Change of Plans
- ☐ Convert to Injection
- ☐ Fracture Treat or Acidize
- ☐ Multiple Completion
- ☐ Other
- ☐ New Construction
- ☐ Pull or Alter Csg
- ☐ Recomplete
- ☐ Reperforate
- ☐ Vent or Flare
- ☐ Water Shut-Off

Approximate date work will start _____

SUBSEQUENT REPORT
(Submit Original Form Only)

- ☐ Abandon *
- ☐ Repair Casing
- ☐ Change of Plans
- ☐ Convert to Injection
- ☐ Fracture Treat or Acidize
- ☒ Other Chemical/Flush Treatment
- ☐ New Construction
- ☐ Pull or Alter Csg
- ☐ Reperforate
- ☐ Vent or Flare
- ☐ Water Shut-Off

Date of work completion 12/03/01

Report results of Multiple Completions and Recompletions to different reservoirs on WELL COMPLETION OR RECOMPLETION REPORT AND LOG form.

* Must be accompanied by a cement verification report.

12. DESCRIBE PROPOSED OR COMPLETED OPERATIONS (Clearly state all pertinent details, and give pertinent dates. If well is directionally drilled, give subsurface locations and measured and true vertical depths for all markers and zones pertinent to this work.)

Please be advised that the above referenced well was chemically treated with 4000 gallons of low Ph fluid & 250 gallons of 15% HCL on 12/03/01.

RECEIVED

DEC 10 2001

DIVISION OF OIL, GAS AND MINING

13.

Name & Signature: Lynnettre Allred

Title: Administrative Assistant

Date: 12/04/01

(This space for state use only)

(4/94) (See Instructions on Reverse Side)

ConocoPhillips

Divisions of Oil, Gas, and Mining
Attn: Mr. John Baza
1594 West North Temple,
Suite 1210, P. O. Box 145801
Salt Lake City, UT 84114-5801

Re: Notice of Address Change, Merger and Name Change
Address Change effective **December 2, 2002**
Merger and Name Change effective **December 31, 2002**

Gentlemen:

1. Effective December 2, 2002, Phillips Petroleum Company will close its Englewood, Colorado Rocky Mountain Region office. After that time, all correspondence, notices and invoice for Land related matters should be directed to the address(es) noted below. Note that until December 31, 2002, all properties in which Phillips held an interest will continue to be operated by Phillips Petroleum Company, a wholly-owned subsidiary of ConocoPhillips.

2. On December 31, 2002, Phillips Petroleum Company and Conoco Inc. will merge, and the surviving corporation will be renamed "ConocoPhillips Company".

In accordance with the notice provisions of the Operating Agreements and other agreements, if any, between our companies, please adjust your company/organization records, effective for address purposes as of December 2, 2002, and for company name purposes, as of January 1, 2003, to reflect the following information for addressing and delivery of notices, invoicing and payment, and communications with ConocoPhillips Company. This will also apply to Lease Sale notices and other lease-related correspondence and notifications.

U.S. Mail Address:

ConocoPhillips Company
P.O. Box 2197
Houston, Texas 77252
Attn: Chief Landman,
San Juan/Rockies

Physical Address & Overnight Delivery:

ConocoPhillips Company
550 Westlake Park Blvd.
Three Westlake Park
3WL, Room WL 9000
Houston, Texas 77079
Attn: Chief Landman,
San Juan/Rockies

All ballots and official notices/responses sent by facsimile transmission should be sent to the following contact:

Attn: Chief Landman,
San Juan/Rockies

Fax No.: 832-486-2688 or
832-486-2687

Please contact the undersigned immediately if you have any questions. This notice does not apply to royalty inquiries, joint interest billings, or revenue remittances. Please continue to use the same addresses you are currently using for these matters

Sincerely, William Rainbolt

RECEIVED
DEC 0 2 2002
DIVISION OF
OIL, GAS AND MINING

STATE OF UTAH
DEPARTMENT OF NATURAL RESOURCES
DIVISION OF OIL, GAS AND MINING

FORM 9

SUNDRY NOTICES AND REPORTS ON WELLS

Do not use this form for proposals to drill new wells, significantly deepen existing wells below current bottom-hole depth, reenter plugged wells, or to drill horizontal laterals. Use APPLICATION FOR PERMIT TO DRILL form for such proposals.

5. LEASE DESIGNATION AND SERIAL NUMBER:

6. IF INDIAN, ALLOTTEE OR TRIBE NAME:

7. UNIT or CA AGREEMENT NAME:

1. TYPE OF WELL: OIL WELL ☐ GAS WELL ☐ OTHER All

8. WELL NAME and NUMBER: See Attached List

2. NAME OF OPERATOR: Phillips Petroleum Company

9. API NUMBER: See List

3. ADDRESS OF OPERATOR: 980 Plaza Office CITY Bartlesville STATE OK ZIP 74004

PHONE NUMBER: (918) 661-4415

10. FIELD AND POOL, OR WILDCAT:

4. LOCATION OF WELL

FOOTAGES AT SURFACE: See Attached List

COUNTY:

QTR/QTR, SECTION, TOWNSHIP, RANGE, MERIDIAN:

STATE: UTAH

11. CHECK APPROPRIATE BOXES TO INDICATE NATURE OF NOTICE, REPORT, OR OTHER DATA

TYPE OF SUBMISSION	TYPE OF ACTION		
☐ NOTICE OF INTENT (Submit in Duplicate)	☐ ACIDIZE	☐ DEEPEN	☐ REPERFORATE CURRENT FORMATION
Approximate date work will start:	☐ ALTER CASING	☐ FRACTURE TREAT	☐ SIDETRACK TO REPAIR WELL
	☐ CASING REPAIR	☐ NEW CONSTRUCTION	☐ TEMPORARILY ABANDON
	☐ CHANGE TO PREVIOUS PLANS	☑ OPERATOR CHANGE	☐ TUBING REPAIR
	☐ CHANGE TUBING	☐ PLUG AND ABANDON	☐ VENT OR FLARE
☑ SUBSEQUENT REPORT (Submit Original Form Only)	☐ CHANGE WELL NAME	☐ PLUG BACK	☐ WATER DISPOSAL
Date of work completion:	☐ CHANGE WELL STATUS	☐ PRODUCTION (START/RESUME)	☐ WATER SHUT-OFF
	☐ COMMINGLE PRODUCING FORMATIONS	☐ RECLAMATION OF WELL SITE	☐ OTHER:
	☐ CONVERT WELL TYPE	☐ RECOMPLETE - DIFFERENT FORMATION	

12. DESCRIBE PROPOSED OR COMPLETED OPERATIONS. Clearly show all pertinent details including dates, depths, volumes, etc.

Conoco Inc. was merged into Phillips Petroleum Company, the surviving corporation, on December 31, 2002. In connection with this merger and effective on the same date, the name of the surviving corporation was changed to "ConocoPhillips Company". We are requesting that a new Operator Number be assigned to ConocoPhillips Company.

Please send production reporting forms to Herb Henderson at ConocoPhillips Company, 315 S. Johnstone, 980 Plaza Office, Bartlesville, OK 74004. Herb's phone number is 918-661-4415.

Current Operator
Phillips Petroleum Company
Steve de Albuquerque

New Operator
ConocoPhillips Company
Yolanda Perez

RECEIVED
JAN 0 8 2003
DIV. OF OIL, GAS & MINING

NAME (PLEASE PRINT) Yolanda Perez TITLE Sr. Regulatory Analyst

SIGNATURE Yolanda Perez DATE 12/30/2002

(This space for State use only)

(5/2000) (See Instructions on Reverse Side)

ConocoPhillips

SECRETARY'S CERTIFICATE

I, the undersigned, Jennifer M. Garcia, Assistant Secretary of ConocoPhillips Company, formerly Phillips Petroleum Company, organized and existing under and by virtue of the laws of the State of Delaware (the "Corporation"), hereby certify that:

1. As Assistant Secretary I am authorized to execute this certificate on behalf of the Corporation.

2. The attached photocopy of the Certificate of Amendment to the Restated Certificate of Incorporation of Phillips Petroleum Company (to be renamed ConocoPhillips Company) is a true and correct copy as filed in the office of the Secretary of State of Delaware on the 12th day of December 2002, with an effective date of January 1, 2003 and such Certificate of Amendment has not been modified, amended, rescinded or revoked and is in full force and effect as of the date hereof.

3. The attached photocopy of the Certificate of Merger of Conoco Inc. with and into ConocoPhillips Company is a true and correct copy as filed in the office of the Secretary of State of Delaware on the 12th day of December 2002, with an effective date of December 31, 2002 and such Certificate of Merger has not been modified, amended, rescinded or revoked and is in full force and effect as of the date hereof.

IN WITNESS WHEREOF, I have hereunto set my hand as Assistant Secretary and affixed the corporate seal of the Corporation this 7th day of January 2003.

Assistant Secretary
ConocoPhillips Company

STATE OF TEXAS §
§
COUNTY OF HARRIS §

This instrument was acknowledged before me on January 7, 2003, by Jennifer M. Garcia, Assistant Secretary of ConocoPhillips Company, a Delaware corporation, on behalf of said Corporation.

SUSAN F. SHORT
NOTARY PUBLIC
STATE OF TEXAS
EXPIRES
11-12-2005

Notary Public

RECEIVED
JAN 08 2003
DIV. OF OIL, GAS & MINING

Delaware

The First State

I, HARRIET SMITH WINDSOR, SECRETARY OF STATE OF THE STATE OF DELAWARE, DO HEREBY CERTIFY THE ATTACHED IS A TRUE AND CORRECT COPY OF THE CERTIFICATE OF AMENDMENT OF "PHILLIPS PETROLEUM COMPANY", CHANGING ITS NAME FROM "PHILLIPS PETROLEUM COMPANY" TO "CONOCOPHILLIPS COMPANY", FILED IN THIS OFFICE ON THE TWELFTH DAY OF DECEMBER, A.D. 2002, AT 1:41 O'CLOCK P.M.

AND I DO HEREBY FURTHER CERTIFY THAT THE EFFECTIVE DATE OF THE AFORESAID CERTIFICATE OF AMENDMENT IS THE THIRTY-FIRST DAY OF DECEMBER, A.D. 2002, AT 11 O'CLOCK P.M.

RECEIVED
JAN 0 8 2003
DIV. OF OIL, GAS & MINING

Harriet Smith Windsor

Harriet Smith Windsor, Secretary of State

0064324 8100

AUTHENTICATION: 2183360

030002793

DATE: 01-02-03

STATE OF DELAWARE
SECRETARY OF STATE
DIVISION OF CORPORATIONS
FILED 01:41 PM 12/12/2002
020763238 - 0064324

CERTIFICATE OF AMENDMENT

to the

RESTATED CERTIFICATE OF INCORPORATION

of

PHILLIPS PETROLEUM COMPANY
(to be renamed ConocoPhillips Company)

Phillips Petroleum Company ("Phillips"), a corporation organized and existing under the General Corporation Law of the State of Delaware (the "DGCL"), hereby certifies that:

1. The amendments to Phillips' Restated Certificate of Incorporation set forth below were duly adopted in accordance with the provisions of Section 242 of the DGCL and have been consented to in writing by the sole stockholder of Phillips in accordance with Section 228 of the DGCL.

2. Phillips' Restated Certificate of Incorporation is hereby amended by deleting Article I thereof and replacing in lieu thereof a new Article I reading in its entirety as follows:

"The name of the corporation (which is hereinafter referred to as the "Corporation") is ConocoPhillips Company."

3. Phillips' Restated Certificate of Incorporation is hereby amended by deleting Section 1 of Article IV thereof and replacing in lieu thereof a new Section 1 reading in its entirety as follows:

"Section 1. The Corporation shall be authorized to issue 2,100 shares of capital stock, of which 2,100 shares shall be shares of Common Stock, $.01 par value ("Common Stock")."

4. Pursuant to Section 103(d) of the DGCL, this amendment will become effective at 11:00 p.m., Eastern time, on December 31, 2002.

RECEIVED
JAN 0 8 2003
DIV. OF OIL, GAS & MINING

IN WITNESS WHEREOF, Phillips has caused this certificate to be executed this 12th day of December, 2002.

PHILLIPS PETROLEUM COMPANY

By: _____
Name: Rick A. Harrington
Title: Senior Vice President, Legal, and General Counsel

HOU03:884504.1

RECEIVED
JAN 0 8 2003
DIV. OF OIL, GAS & MINING

Delaware

The First State

I, HARRIET SMITH WINDSOR, SECRETARY OF STATE OF THE STATE OF DELAWARE, DO HEREBY CERTIFY THE ATTACHED IS A TRUE AND CORRECT COPY OF THE CERTIFICATE OF MERGER, WHICH MERGES:

"CONOCO INC.", A DELAWARE CORPORATION,

WITH AND INTO "CONOCOPHILLIPS COMPANY" UNDER THE NAME OF "CONOCOPHILLIPS COMPANY", A CORPORATION ORGANIZED AND EXISTING UNDER THE LAWS OF THE STATE OF DELAWARE, AS RECEIVED AND FILED IN THIS OFFICE THE TWELFTH DAY OF DECEMBER, A.D. 2002, AT 1:44 O'CLOCK P.M.

AND I DO HEREBY FURTHER CERTIFY THAT THE EFFECTIVE DATE OF THE AFORESAID CERTIFICATE OF MERGER IS THE THIRTY-FIRST DAY OF DECEMBER, A.D. 2002, AT 11:59 O'CLOCK P.M.

RECEIVED
JAN 0 8 2003
DIV. OF OIL, GAS & MINING

Harriet Smith Windsor

Harriet Smith Windsor, Secretary of State

0064324 8100M

AUTHENTICATION: 2183370

030002793

DATE: 01-02-03

STATE OF DELAWARE
SECRETARY OF STATE
DIVISION OF CORPORATIONS
FILED 01:44 PM 12/12/2002
020763253 - 0064324

CERTIFICATE OF MERGER

of

Conoco Inc.
(a Delaware corporation)

with and into

ConocoPhillips Company
(a Delaware corporation)

Phillips Petroleum Company, a Delaware corporation to be renamed ConocoPhillips Company prior to the effective time of this certificate of merger (the "Surviving Corporation"), in compliance with the requirements of the General Corporation Law of the State of Delaware (the "DGCL") and desiring to effect a merger of Conoco Inc., a Delaware corporation formerly incorporated under the name Du Pont Holdings, Inc. (the "Merging Corporation," and together with the Surviving Corporation, the "Constituent Corporations"), with and into the Surviving Corporation, and acting by its duly authorized officer, DOES HEREBY CERTIFY that:

First: As of the date hereof, the name and state of incorporation of each of the Constituent Corporations of the merger are as follows:

NAME	STATE OF INCORPORATION
PHILLIPS PETROLEUM COMPANY	Delaware
CONOCO INC.	Delaware

Second: An agreement and plan of merger has been approved, adopted, certified, executed and acknowledged by each of the Constituent Corporations in accordance with the requirements of Section 251 of the DGCL;

Third: The name of the Surviving Corporation will be ConocoPhillips Company;

Fourth: The Certificate of Incorporation of ConocoPhillips Company immediately prior to the merger shall be the Certificate of Incorporation of the Surviving Corporation until such time as it may be amended in accordance with applicable law and the provisions thereof;

Fifth: The executed agreement and plan of merger is on file at an office of the Surviving Corporation, the address of which is 600 North Dairy Ashford, Houston, Texas 77079;

RECEIVED
JAN 0 8 2003
DIV. OF OIL, GAS & MINING

Sixth: A copy of the agreement and plan of merger will be furnished by the Surviving Corporation, on request and without cost, to any stockholder of any Constituent Corporation; and

Seventh: Pursuant to Section 103(d) of the DGCL, this certificate of merger will become effective at 11:59 p.m., Eastern time, on December 31, 2002.

Dated: December 12, 2002

PHILLIPS PETROLEUM COMPANY
(a Delaware corporation)

By: _____
Name: Rick A. Harrington
Title: Senior Vice President, Legal, and General Counsel

RECEIVED
JAN 0 8 2003
DIV. OF OIL, GAS & MINING

STATE OF UTAH
DEPARTMENT OF COMMERCE
REGISTRATION

CONOCOPHILLIPS COMPANY

EFFECTIVE
06/14/1946

EXPIRATION
*RENEWAL

REFERENCE NUMBER(S), CLASSIFICATION(S) & DETAIL(S)

Corporation - Foreign - Profit
562960-0143

UNITED STATES CORP CO
CONOCOPHILLIPS COMPANY
GATEWAY TOWER EAST STE 900
10 EAST SOUTH TEMPLE
SLC UT 84133

RECEIVED
JAN 0 8 2003
DIV. OF OIL, GAS & MINING

STATE OF UTAH
DEPARTMENT OF COMMERCE
DIVISION OF CORPORATIONS & COMMERCIAL CODE

REGISTRATION

EFFECTIVE DATE: 06/14/1946

EXPIRATION DATE: *RENEWAL

ISSUED TO: CONOCOPHILLIPS COMPANY

THE GREAT SEAL OF THE STATE OF UTAH
INDUSTRY
1847
1896

REFERENCE NUMBER(S), CLASSIFICATION(S) & DETAIL(S)
562960-0143 **Corporation - Foreign - Profit**
***RENEWAL**
You will need to renew your registration each anniversary date of the effective date.
Exceptions: DBAs and Business Trusts renew every three (3) years from the effective date.

Utah Well List as of 12/26/02

API Well Number	Well Name	Well Type	Well Status	Sec	Twpn	Twpd	Rngn	Rngd
43-007-30887-00-00	ANDREEN 32-529	Gas Well	APD	32	14	S	10	E
43-007-30865-00-00	COTNER 29-549	Gas Well	APD	29	14	S	10	E
43-007-30837-00-00	DALLIN 32-615	Gas Well	APD	32	13	S	9	E
43-047-34551-00-00	FED 43-24-3 #1	Gas Well	APD	24	10	S	17	E
43-047-33982-00-00	FEDERAL 12-17 #1	Gas Well	APD	17	10	S	18	E
43-047-34471-00-00	FEDERAL 12-29-7 1	Gas Well	APD	29	9	S	19	E
43-047-34472-00-00	FEDERAL 31-31-6 1	Gas Well	APD	31	9	S	19	E
43-007-30864-00-00	MCKENDRICK 29-548	Gas Well	APD	29	14	S	10	E
43-015-30512-00-00	PPCO 19-379	Gas Well	APD	19	16	S	9	E
43-015-30515-00-00	PPCO 24-562	Gas Well	APD	24	16	S	8	E
43-015-30548-00-00	PPCO 30-605	Gas Well	APD	30	16	S	9	E
43-007-30888-00-00	PRICE 32-438	Gas Well	APD	32	14	S	10	E
43-007-30813-00-00	RITZAKIS 33-514	Gas Well	APD	33	13	S	9	E
43-007-30766-00-00	RITZAKIS 33-516	Gas Well	APD	33	13	S	9	E
43-007-30838-00-00	ROWLEY 32-616	Gas Well	APD	32	13	S	9	E
43-007-30863-00-00	SCHMIDT 29-531	Gas Well	APD	29	14	S	10	E
43-007-30797-00-00	SEELY 15-498	Gas Well	APD	15	14	S	8	E
43-007-30798-00-00	SEELY 15-499	Gas Well	APD	15	14	S	8	E
43-007-30799-00-00	SEELY 15-500	Gas Well	APD	15	14	S	8	E
43-007-30796-00-00	SEELY 22-492	Gas Well	APD	22	14	S	8	E
43-007-30801-00-00	SEELY 22-502	Gas Well	APD	22	14	S	8	E
43-007-30802-00-00	SEELY 22-503	Gas Well	APD	22	14	S	8	E
43-007-30711-00-00	USA 09-452	Gas Well	APD	9	15	S	8	E
43-015-30351-00-00	USA 11-313	Gas Well	APD	11	16	S	9	E
43-015-30398-00-00	USA 12-385	Gas Well	APD	12	16	S	9	E
43-015-30409-00-00	USA 12-426	Gas Well	APD	12	16	S	9	E
43-007-30805-00-00	USA 14-490	Gas Well	APD	14	14	S	8	E
43-007-30806-00-00	USA 14-491	Gas Well	APD	14	14	S	8	E
43-007-30676-00-00	USA 15-421	Gas Well	APD	15	15	S	8	E
43-015-30417-00-00	USA 21-427	Gas Well	APD	21	16	S	9	E
43-015-30416-00-00	USA 21-428	Gas Well	APD	21	16	S	9	E
43-015-30415-00-00	USA 21-429	Gas Well	APD	21	16	S	9	E
43-007-30515-00-00	USA 31-309	Gas Well	APD	31	15	S	10	E
43-007-30835-00-00	USA 33-515	Gas Well	APD	33	13	S	9	E
43-007-30836-00-00	USA 33-624	Gas Well	APD	33	13	S	9	E
43-007-30803-00-00	USA 34-518	Gas Well	APD	34	14	S	8	E
43-007-30478-00-00	UTAH 05-224	Gas Well	APD	5	15	S	9	E
43-015-30411-00-00	UTAH 16-365	Gas Well	APD	16	16	S	9	E
43-015-30412-00-00	UTAH 16-366	Gas Well	APD	16	16	S	9	E
43-015-30413-00-00	UTAH 16-430	Gas Well	APD	16	16	S	9	E
43-015-30299-00-00	UTAH 18-374	Gas Well	APD	18	16	S	9	E
43-015-30420-00-00	UTAH 19-377	Gas Well	APD	19	16	S	9	E
43-015-30492-00-00	UTAH 19-378	Gas Well	APD	19	16	S	9	E
43-007-30891-00-00	UTAH 19-533	Gas Well	APD	19	14	S	10	E
43-015-30414-00-00	UTAH 20-381	Gas Well	APD	20	16	S	9	E
43-015-30421-00-00	UTAH 20-382	Gas Well	APD	20	16	S	9	E
43-015-30518-00-00	UTAH 25-576	Gas Well	APD	25	16	S	8	E
43-015-30539-00-00	UTAH 25-578	Gas Well	APD	25	16	S	8	E
43-015-30540-00-00	UTAH 25-579	Gas Well	APD	25	16	S	8	E
43-007-30817-00-00	UTAH 25-618	Gas Well	APD	25	13	S	9	E
43-015-30543-00-00	UTAH 26-582	Gas Well	APD	26	16	S	8	E
43-015-30547-00-00	UTAH 29-608	Gas Well	APD	29	16	S	9	E
43-007-30889-00-00	UTAH 32-128	Gas Well	APD	32	14	S	10	E
43-007-30814-00-00	UTAH 35-506	Gas Well	APD	35	13	S	9	E

Utah Well List as of 12/26/02

API Well Number	Well Name	Well Type	Well Status	Sec	Twpn	Twpd	Rngn	Rngd
43-047-33750-00-00	FEDERAL 34-29	Gas Well	P	29	9	S	19	E
43-007-30782-00-00	GAROFOLA 26-482	Gas Well	P	26	15	S	8	E
43-007-30335-00-00	GIACOLETTO 11-113	Gas Well	P	11	14	S	9	E
43-007-30407-00-00	GIACOLETTO 13-120	Gas Well	P	13	14	S	9	E
43-007-30345-00-00	GIACOLETTO 14-121	Gas Well	P	14	14	S	9	E
43-007-30487-00-00	HELPER & ASSOC 07-307	Gas Well	P	7	15	S	9	E
43-007-30459-00-00	HELPER & ASSOC 18-236	Gas Well	P	18	15	S	9	E
43-007-30720-00-00	HELPER & ASSOC 18-308	Gas Well	P	18	15	S	9	E
43-007-30412-00-00	HELPER & ASSOC 8-232	Gas Well	P	8	15	S	9	E
43-007-30258-00-00	HELPER & ASSOCIATES 7-84	Gas Well	P	7	15	S	9	E
43-007-30588-00-00	JENSEN 16-132	Gas Well	P	16	15	S	10	E
43-007-30420-00-00	KAKATSIDES 31-197	Gas Well	P	31	14	S	9	E
43-007-30296-00-00	LDS 17-133	Gas Well	P	17	15	S	10	E
43-007-30323-00-00	PAAR 16-146	Gas Well	P	16	14	S	9	E
43-047-34286-00-00	PETES WASH 23-12 #1	Gas Well	P	12	10	S	17	E
43-007-30748-00-00	PIERUCCI 25-461	Gas Well	P	25	15	S	8	E
43-007-30749-00-00	PIERUCCI 25-462	Gas Well	P	25	15	S	8	E
43-007-30754-00-00	PIERUCCI 26-463	Gas Well	P	26	15	S	8	E
43-007-30755-00-00	PIERUCCI 26-464	Gas Well	P	26	15	S	8	E
43-007-30745-00-00	PIERUCCI 26-481	Gas Well	P	26	15	S	8	E
43-007-30117-00-00	PINNACLE PEAK 19-171	Gas Well	P	19	14	S	9	E
43-007-30845-00-00	PMC 10-526	Gas Well	P	10	15	S	8	E
43-007-30282-00-00	POWELL 19-104	Gas Well	P	19	15	S	10	E
43-007-30283-00-00	POWELL 19-105	Gas Well	P	19	15	S	10	E
43-007-30346-00-00	POWELL 30-173	Gas Well	P	30	15	S	10	E
43-015-30279-00-00	PPCO 10-557	Gas Well	P	10	16	S	8	E
43-015-30494-00-00	PPCO 15-555	Gas Well	P	15	16	S	8	E
43-007-30211-00-00	PRETTYMAN 10-15-34	Gas Well	P	10	14	S	9	E
43-007-30340-00-00	PRETTYMAN 11-114	Gas Well	P	11	14	S	9	E
43-007-30653-00-00	RGC 21-331	Gas Well	P	21	15	S	9	E
43-007-30743-00-00	RGC 21-332	Gas Well	P	21	15	S	9	E
43-007-30747-00-00	RGC 25-460	Gas Well	P	25	15	S	8	E
43-007-30559-00-00	RGC 28-318	Gas Well	P	28	15	S	9	E
43-007-30518-00-00	RGC 28-319	Gas Well	P	28	15	S	9	E
43-007-30509-00-00	RITZAKIS 03-408	Gas Well	P	3	14	S	9	E
43-007-30473-00-00	RITZAKIS 5-304	Gas Well	P	5	14	S	9	E
43-007-30474-00-00	RITZAKIS 5-305	Gas Well	P	5	14	S	9	E
43-007-30475-00-00	RITZAKIS 8-298	Gas Well	P	8	14	S	9	E
43-007-30479-00-00	RITZAKIS 8-299	Gas Well	P	8	14	S	9	E
43-007-30476-00-00	RITZAKIS 8-300	Gas Well	P	8	14	S	9	E
43-007-30374-00-00	ROBERTSON 32-127	Gas Well	P	32	14	S	10	E
43-007-30610-00-00	SAMPINOS 16-131	Gas Well	P	16	15	S	10	E
43-007-30723-00-00	SAMPINOS 16-454	Gas Well	P	16	15	S	10	E
43-007-30765-00-00	SAMPINOS 16-521	Gas Well	P	16	15	S	10	E
43-007-30800-00-00	SEELY 22-501	Gas Well	P	22	14	S	8	E
43-007-30130-00-00	ST OF UT 25-9-1	Gas Well	P	25	14	S	9	E
43-007-30142-00-00	ST OF UT 36-3-4	Gas Well	P	36	14	S	9	E
43-007-30116-00-00	STELLA-HAMAKER 10-174	Gas Well	P	10	15	S	8	E
43-007-30746-00-00	TABOR 23-468	Gas Well	P	23	15	S	8	E
43-007-30319-00-00	TELONIS 15-142	Gas Well	P	15	14	S	9	E
43-007-30322-00-00	TELONIS 16-145	Gas Well	P	16	14	S	9	E
43-007-30300-00-00	TELONIS 19-150	Gas Well	P	19	14	S	9	E
43-007-30299-00-00	TELONIS 19-151	Gas Well	P	19	14	S	9	E
43-007-30327-00-00	TELONIS 20-152	Gas Well	P	20	14	S	9	E

Utah Well List as of 12/26/02

API Well Number	Well Name	Well Type	Well Status	Sec	Twpn	Twpd	Rngn	Rngd
43-007-30631-00-00	USA 13-419	Gas Well	P	13	15	S	8	E
43-007-30707-00-00	USA 13-447	Gas Well	P	13	14	S	8	E
43-007-30706-00-00	USA 13-470	Gas Well	P	13	14	S	8	E
43-007-30789-00-00	USA 13-474	Gas Well	P	13	14	S	8	E
43-007-30790-00-00	USA 13-475	Gas Well	P	13	14	S	8	E
43-007-30568-00-00	USA 13-91	Gas Well	P	13	14	S	9	E
43-007-30404-00-00	USA 14-122	Gas Well	P	14	14	S	9	E
43-015-30418-00-00	USA 1-425	Gas Well	P	1	16	S	9	E
43-007-30579-00-00	USA 14-325	Gas Well	P	14	15	S	8	E
43-007-30634-00-00	USA 14-386	Gas Well	P	14	15	S	8	E
43-007-30646-00-00	USA 14-416	Gas Well	P	14	15	S	8	E
43-007-30647-00-00	USA 14-417	Gas Well	P	14	15	S	8	E
43-007-30791-00-00	USA 14-476	Gas Well	P	14	14	S	8	E
43-007-30792-00-00	USA 14-477	Gas Well	P	14	14	S	8	E
43-007-30529-00-00	USA 14-74	Gas Well	P	14	14	S	9	E
43-007-30263-00-00	USA 14-75	Gas Well	P	14	14	S	9	E
43-007-30450-00-00	USA 15-176	Gas Well	P	15	14	S	9	E
43-007-30423-00-00	USA 15-177	Gas Well	P	15	14	S	9	E
43-007-30690-00-00	USA 15-420	Gas Well	P	15	15	S	8	E
43-007-30691-00-00	USA 15-422	Gas Well	P	15	15	S	8	E
43-007-30264-00-00	USA 15-88	Gas Well	P	15	14	S	9	E
43-007-30422-00-00	USA 17-179	Gas Well	P	17	14	S	9	E
43-007-30622-00-00	USA 17-180A	Gas Well	P	17	14	S	9	E
43-007-30618-00-00	USA 18-181	Gas Well	P	18	14	S	9	E
43-007-30417-00-00	USA 18-182	Gas Well	P	18	14	S	9	E
43-007-30619-00-00	USA 18-435	Gas Well	P	18	14	S	9	E
43-007-30393-00-00	USA 19-222	Gas Well	P	19	15	S	10	E
43-007-30392-00-00	USA 19-73	Gas Well	P	19	15	S	10	E
43-007-30448-00-00	USA 20-287	Gas Well	P	20	15	S	10	E
43-007-30451-00-00	USA 20-288	Gas Well	P	20	15	S	10	E
43-007-30590-00-00	USA 20-398	Gas Well	P	20	15	S	10	E
43-007-30591-00-00	USA 20-399	Gas Well	P	20	15	S	10	E
43-007-30424-00-00	USA 21-184	Gas Well	P	21	14	S	9	E
43-007-30425-00-00	USA 21-35	Gas Well	P	21	14	S	9	E
43-007-30426-00-00	USA 22-185	Gas Well	P	22	14	S	9	E
43-007-30477-00-00	USA 22-186	Gas Well	P	22	14	S	9	E
43-007-30700-00-00	USA 22-466	Gas Well	P	22	15	S	8	E
43-007-30611-00-00	USA 23-423	Gas Well	P	23	14	S	8	E
43-007-30650-00-00	USA 23-445	Gas Well	P	23	15	S	8	E
43-007-30704-00-00	USA 23-451	Gas Well	P	23	15	S	8	E
43-007-30503-00-00	USA 23-467	Gas Well	P	23	15	S	8	E
43-007-30793-00-00	USA 23-478	Gas Well	P	23	14	S	8	E
43-007-30794-00-00	USA 23-479	Gas Well	P	23	14	S	8	E
43-007-30795-00-00	USA 23-480	Gas Well	P	23	14	S	8	E
43-007-30469-00-00	USA 24-183	Gas Well	P	24	14	S	8	E
43-007-30612-00-00	USA 24-387	Gas Well	P	24	14	S	8	E
43-007-30613-00-00	USA 24-388	Gas Well	P	24	14	S	8	E
43-007-30651-00-00	USA 24-443	Gas Well	P	24	15	S	8	E
43-007-30648-00-00	USA 24-444	Gas Well	P	24	15	S	8	E
43-007-30708-00-00	USA 24-446	Gas Well	P	24	14	S	8	E
43-007-30652-00-00	USA 24-448	Gas Well	P	24	15	S	8	E
43-007-30705-00-00	USA 24-449	Gas Well	P	24	15	S	8	E
43-007-30505-00-00	USA 25-459	Gas Well	P	25	15	S	8	E
43-007-30614-00-00	USA 26-393	Gas Well	P	26	14	S	8	E

Utah Well List as of 12/26/02

API Well Number	Well Name	Well Type	Well Status	Sec	Twpn	Twpd	Rngn	Rngd
43-007-30430-00-00	UTAH 06-223	Gas Well	P	6	15	S	9	E
43-007-30562-00-00	UTAH 06-330	Gas Well	P	6	15	S	9	E
43-007-30716-00-00	UTAH 06-483	Gas Well	P	6	15	S	9	E
43-007-30409-00-00	UTAH 07-234	Gas Well	P	7	15	S	9	E
43-007-30421-00-00	UTAH 07-235	Gas Well	P	7	15	S	9	E
43-007-30411-00-00	UTAH 08-231	Gas Well	P	8	15	S	9	E
43-007-30488-00-00	UTAH 08-233	Gas Well	P	8	15	S	9	E
43-015-30464-00-00	UTAH 08-354	Gas Well	P	8	16	S	9	E
43-015-30378-00-00	UTAH 08-355	Gas Well	P	8	16	S	9	E
43-015-30379-00-00	UTAH 08-356	Gas Well	P	8	16	S	9	E
43-015-30380-00-00	UTAH 08-357	Gas Well	P	8	16	S	9	E
43-007-30449-00-00	UTAH 09-227	Gas Well	P	9	15	S	9	E
43-007-30561-00-00	UTAH 09-329	Gas Well	P	9	15	S	9	E
43-015-30300-00-00	UTAH 09-358	Gas Well	P	9	16	S	9	E
43-015-30407-00-00	UTAH 09-359	Gas Well	P	9	16	S	9	E
43-015-30397-00-00	UTAH 09-360	Gas Well	P	9	16	S	9	E
43-015-30408-00-00	UTAH 09-361	Gas Well	P	9	16	S	9	E
43-007-30580-00-00	UTAH 09-412	Gas Well	P	9	15	S	10	E
43-007-30605-00-00	UTAH 09-413	Gas Well	P	9	15	S	10	E
43-007-30657-00-00	UTAH 09-450	Gas Well	P	9	15	S	10	E
43-007-30722-00-00	UTAH 09-453	Gas Well	P	9	15	S	10	E
43-007-30302-00-00	UTAH 10-01-36	Gas Well	P	10	15	S	9	E
43-007-30298-00-00	UTAH 10-219	Gas Well	P	10	15	S	9	E
43-007-30432-00-00	UTAH 10-220	Gas Well	P	10	15	S	9	E
43-007-30303-00-00	UTAH 10-221	Gas Well	P	10	15	S	9	E
43-007-30228-00-00	UTAH 11-50	Gas Well	P	11	15	S	9	E
43-007-30229-00-00	UTAH 11-51	Gas Well	P	11	15	S	9	E
43-007-30230-00-00	UTAH 11-52	Gas Well	P	11	15	S	9	E
43-007-30231-00-00	UTAH 11-53	Gas Well	P	11	15	S	9	E
43-007-30467-00-00	UTAH 1-209	Gas Well	P	1	15	S	8	E
43-007-30210-00-00	UTAH 12-15-37	Gas Well	P	12	15	S	9	E
43-007-30232-00-00	UTAH 12-54	Gas Well	P	12	15	S	9	E
43-007-30233-00-00	UTAH 12-55	Gas Well	P	12	15	S	9	E
43-007-30234-00-00	UTAH 12-56	Gas Well	P	12	15	S	9	E
43-015-30493-00-00	UTAH 13-376	Gas Well	P	13	16	S	8	E
43-015-30301-00-00	UTAH 13-550	Gas Well	P	13	16	S	8	E
43-007-30243-00-00	UTAH 13-65	Gas Well	P	13	15	S	9	E
43-007-30244-00-00	UTAH 13-66	Gas Well	P	13	15	S	9	E
43-007-30245-00-00	UTAH 13-67	Gas Well	P	13	15	S	9	E
43-007-30246-00-00	UTAH 13-68	Gas Well	P	13	15	S	9	E
43-007-30439-00-00	UTAH 13-92	Gas Well	P	13	14	S	9	E
43-007-30220-00-00	UTAH 1-42	Gas Well	P	1	15	S	9	E
43-007-30221-00-00	UTAH 1-43	Gas Well	P	1	15	S	9	E
43-007-30222-00-00	UTAH 1-44	Gas Well	P	1	15	S	9	E
43-007-30223-00-00	UTAH 1-45	Gas Well	P	1	15	S	9	E
43-015-30330-00-00	UTAH 14-551	Gas Well	P	14	16	S	8	E
43-015-30331-00-00	UTAH 14-552	Gas Well	P	14	16	S	8	E
43-007-30239-00-00	UTAH 14-61	Gas Well	P	14	15	S	9	E
43-007-30240-00-00	UTAH 14-62	Gas Well	P	14	15	S	9	E
43-007-30241-00-00	UTAH 14-63	Gas Well	P	14	15	S	9	E
43-007-30242-00-00	UTAH 14-64	Gas Well	P	14	15	S	9	E
43-015-30334-00-00	UTAH 15-553	Gas Well	P	15	16	S	8	E
43-007-30416-00-00	UTAH 17-101	Gas Well	P	17	15	S	10	E
43-007-30277-00-00	UTAH 17-102	Gas Well	P	17	15	S	10	E

Utah Well List as of 12/26/02

API Well Number	Well Name	Well Type	Well Status	Sec	Twpn	Twpd	Rngn	Rngd
43-007-30255-00-00	UTAH 24-80	Gas Well	P	24	15	S	9	E
43-007-30256-00-00	UTAH 24-81	Gas Well	P	24	15	S	9	E
43-007-30267-00-00	UTAH 24-86	Gas Well	P	24	15	S	9	E
43-007-30375-00-00	UTAH 24-87	Gas Well	P	24	15	S	9	E
43-007-30227-00-00	UTAH 2-49	Gas Well	P	2	15	S	9	E
43-007-30157-00-00	UTAH 25-11-7	Gas Well	P	25	14	S	9	E
43-007-30399-00-00	UTAH 25-134	Gas Well	P	25	15	S	9	E
43-007-30400-00-00	UTAH 25-252	Gas Well	P	25	15	S	9	E
43-007-30401-00-00	UTAH 25-253	Gas Well	P	25	15	S	9	E
43-007-30402-00-00	UTAH 25-254	Gas Well	P	25	15	S	9	E
43-007-30600-00-00	UTAH 25-389	Gas Well	P	25	14	S	8	E
43-007-30599-00-00	UTAH 25-390	Gas Well	P	25	14	S	8	E
43-007-30658-00-00	UTAH 25-391	Gas Well	P	25	14	S	8	E
43-007-30602-00-00	UTAH 25-392	Gas Well	P	25	14	S	8	E
43-007-30206-00-00	UTAH 25-4-33	Gas Well	P	25	14	S	9	E
43-015-30519-00-00	UTAH 25-577	Gas Well	P	25	16	S	8	E
43-007-30156-00-00	UTAH 25-7-6	Gas Well	P	25	14	S	9	E
43-007-30204-00-00	UTAH 26-11-25	Gas Well	P	26	14	S	9	E
43-007-30205-00-00	UTAH 26-1-23	Gas Well	P	26	14	S	9	E
43-007-30181-00-00	UTAH 26-16-8	Gas Well	P	26	14	S	9	E
43-007-30446-00-00	UTAH 26-255	Gas Well	P	26	15	S	9	E
43-007-30445-00-00	UTAH 26-256	Gas Well	P	26	15	S	9	E
43-007-30444-00-00	UTAH 26-257	Gas Well	P	26	15	S	9	E
43-007-30514-00-00	UTAH 26-267	Gas Well	P	26	15	S	9	E
43-015-30541-00-00	UTAH 26-580	Gas Well	P	26	16	S	8	E
43-015-30542-00-00	UTAH 26-581	Gas Well	P	26	16	S	8	E
43-015-30544-00-00	UTAH 26-583	Gas Well	P	26	16	S	8	E
43-007-30202-00-00	UTAH 26-6-24	Gas Well	P	26	14	S	9	E
43-007-30395-00-00	UTAH 27-187	Gas Well	P	27	14	S	9	E
43-007-30292-00-00	UTAH 27-188	Gas Well	P	27	14	S	9	E
43-007-30457-00-00	UTAH 27-268	Gas Well	P	27	15	S	9	E
43-007-30458-00-00	UTAH 27-269	Gas Well	P	27	15	S	9	E
43-007-30712-00-00	UTAH 27-457	Gas Well	P	27	14	S	8	E
43-007-30714-00-00	UTAH 27-458	Gas Well	P	27	14	S	8	E
43-007-30777-00-00	UTAH 27-520	Gas Well	P	27	14	S	8	E
43-015-30545-00-00	UTAH 27-584	Gas Well	P	27	16	S	8	E
43-007-30193-00-00	UTAH 27-8-29	Gas Well	P	27	14	S	9	E
43-007-30186-00-00	UTAH 27-9-30	Gas Well	P	27	14	S	9	E
43-007-30396-00-00	UTAH 28-189	Gas Well	P	28	14	S	9	E
43-007-30397-00-00	UTAH 28-190	Gas Well	P	28	14	S	9	E
43-007-30293-00-00	UTAH 28-191	Gas Well	P	28	14	S	9	E
43-007-30294-00-00	UTAH 28-192	Gas Well	P	28	14	S	9	E
43-007-30551-00-00	UTAH 28-320	Gas Well	P	28	15	S	9	E
43-007-30560-00-00	UTAH 28-321	Gas Well	P	28	15	S	9	E
43-007-30405-00-00	UTAH 29-193	Gas Well	P	29	14	S	9	E
43-007-30427-00-00	UTAH 29-194	Gas Well	P	29	14	S	9	E
43-007-30739-00-00	UTAH 29-339	Gas Well	P	29	15	S	9	E
43-007-30740-00-00	UTAH 29-340	Gas Well	P	29	15	S	9	E
43-007-30741-00-00	UTAH 29-341	Gas Well	P	29	15	S	9	E
43-007-30742-00-00	UTAH 29-342	Gas Well	P	29	15	S	9	E
43-007-30262-00-00	UTAH 30-125	Gas Well	P	30	14	S	10	E
43-007-30185-00-00	UTAH 30-13-14	Gas Well	P	30	14	S	10	E
43-007-30265-00-00	UTAH 30-195	Gas Well	P	30	14	S	9	E
43-007-30344-00-00	UTAH 30-196	Gas Well	P	30	14	S	9	E

Utah Well List as of 12/26/02

API Well Number	Well Name	Well Type	Well Status	Sec	Twpn	Twpd	Rngn	Rngd
43-007-30178-00-00	UTAH 36-1-2	Gas Well	P	36	14	S	9	E
43-007-30341-00-00	UTAH 36-135	Gas Well	P	36	15	S	9	E
43-007-30343-00-00	UTAH 36-136	Gas Well	P	36	15	S	9	E
43-007-30342-00-00	UTAH 36-137	Gas Well	P	36	15	S	9	E
43-007-30315-00-00	UTAH 36-162	Gas Well	P	36	14	S	8	E
43-007-30316-00-00	UTAH 36-163	Gas Well	P	36	14	S	8	E
43-007-30317-00-00	UTAH 36-164	Gas Well	P	36	14	S	8	E
43-007-30318-00-00	UTAH 36-165	Gas Well	P	36	14	S	8	E
43-007-30144-00-00	UTAH 36-9-5	Gas Well	P	36	14	S	9	E
43-015-30341-00-00	UTAH 4-280	Gas Well	P	4	16	S	9	E
43-015-30342-00-00	UTAH 4-282	Gas Well	P	4	16	S	9	E
43-007-30384-00-00	UTAH 5-205	Gas Well	P	5	15	S	9	E
43-007-30269-00-00	UTAH 5-94	Gas Well	P	5	15	S	10	E
43-007-30270-00-00	UTAH 5-95	Gas Well	P	5	15	S	10	E
43-007-30271-00-00	UTAH 5-96	Gas Well	P	5	15	S	10	E
43-007-30217-00-00	UTAH 6-38	Gas Well	P	6	15	S	10	E
43-007-30218-00-00	UTAH 6-39	Gas Well	P	6	15	S	10	E
43-007-30219-00-00	UTAH 6-40	Gas Well	P	6	15	S	10	E
43-007-30254-00-00	UTAH 6-41	Gas Well	P	6	15	S	10	E
43-007-30235-00-00	UTAH 7-57	Gas Well	P	7	15	S	10	E
43-007-30236-00-00	UTAH 7-58	Gas Well	P	7	15	S	10	E
43-007-30237-00-00	UTAH 7-59	Gas Well	P	7	15	S	10	E
43-007-30238-00-00	UTAH 7-60	Gas Well	P	7	15	S	10	E
43-007-30275-00-00	UTAH 8-100	Gas Well	P	8	15	S	10	E
43-007-30410-00-00	UTAH 8-230	Gas Well	P	8	15	S	9	E
43-007-30272-00-00	UTAH 8-97	Gas Well	P	8	15	S	10	E
43-007-30285-00-00	UTAH 8-98X	Gas Well	P	8	15	S	10	E
43-007-30274-00-00	UTAH 8-99	Gas Well	P	8	15	S	10	E
43-007-30413-00-00	UTAH 9-228	Gas Well	P	9	15	S	9	E
43-007-30414-00-00	UTAH 9-229	Gas Well	P	9	15	S	9	E
43-007-30279-00-00	WILLIAMS 30-78	Gas Well	P	30	14	S	10	E
43-007-30481-00-00	WOOLSTENHULME 05-266	Gas Well	P	5	15	S	10	E
43-015-30250-00-00	UTAH 16-110	Gas Well	Shut_In	16	16	S	9	E

United States Department of the Interior

BUREAU OF LAND MANAGEMENT
Eastern States Office
7450 Boston Boulevard
Springfield, Virginia 22153

IN REPLY REFER TO
3106.8(932.34)WF

January 16, 2003

NOTICE

ConocoPhillips Company P.O. Box 7500 Bartlesville, Oklahoma 74005	: : :	Oil & Gas Leases

Merger/Name Change Recognized

Acceptable evidence was received in this office on January 14, 2003, concerning the change of name of Phillips Petroleum Company to **ConocoPhillips Company** and the merger of **Conoco Incorporated** into **ConocoPhillips Company** on Federal oil and gas leases, with **ConocoPhillips Company being the surviving entity.**

The Secretary of the State of Delaware certified the effective date of this merger effective December 31, 2002.

The oil and gas lease files identified on the enclosed exhibit have been noted to the merger. The exhibit was compiled from a list of leases obtained from your list of leases. Eastern States has not abstracted the lease files to determine if the entities affected by this merger hold an interest in the leases identified nor have we attempted to identify leases where the entities are the operator on the ground maintaining no vested record title or operating rights interest. We are notifying the Minerals Management Service and all applicable Bureau of Land Management offices of this merger and name change by a copy of this notice. If additional documentation for changes of operator are required by our Field Offices, you will be contacted by them.

If you identify other leases in which the merging entity maintain an interest, please contact this office and we will appropriately document those files with a copy of this Notice.

By Operation of law the name of the principal on Nationwide Oil and Gas Bond held by Conoco Incorporated (ES0085) has been changed to ConocoPhillips Company.

If you have any questions, please contact Bill Forbes at 703-440-1536.

Wilbert B. Forbes
Land Law Examiner
Branch of Use Authorization
Division of Resources Planning, Use
and Protection

bc: JFO, BLM State Offices, MMS, ES RF, 930 RF, ES-932:
Bforbes:wbf:01/16/03:440-1536/ConocoPhillips Co

Division of Oil, Gas and Mining

OPERATOR CHANGE WORKSHEET

ROUTING
1. GLH
2. CDW ✓
3. FILE

Change of Operator (Well Sold) — Designation of Agent/Operator

Operator Name Change — X **Merger**

The operator of the well(s) listed below has changed, effective: **12-31-02**

FROM: (Old Operator):	**TO:** (New Operator):
PHILLIPS PETROLEUM COMPANY	CONOCOPHILLIPS COMPANY
Address: 980 PLAZA OFFICE	Address: P O BOX 2197, WL3 4066
BARTLESVILLE, OK 74004	HOUSTON, TX 77252
Phone: 1-(918)-661-4415	Phone: 1-(832)-486-2329
Account No. N1475	Account No. N2335

CA No. **Unit:** **DRUNKARDS WASH**

WELL(S)

NAME	SEC TWN RNG	API NO	ENTITY NO	LEASE TYPE	WELL TYPE	WELL STATUS
UTAH 30-196	30-14S-09E	43-007-30344	11256	STATE	GW	P
UTAH 31-200	31-14S-09E	43-007-30385	11256	STATE	GW	P
UTAH 31-198	31-14S-09E	43-007-30406	11256	STATE	GW	P
KAKATSIDES 31-197	31-14S-09E	43-007-30420	11256	FEE	GW	P
UTAH 31-199	31-14S-09E	43-007-30480	11256	STATE	GW	P
UTAH 32-158	32-14S-09E	43-007-30333	11256	STATE	GW	P
UTAH 32-159	32-14S-09E	43-007-30334	11256	STATE	GW	P
UTAH 32-161	32-14S-09E	43-007-30336	11256	STATE	GW	P
UTAH 32-160	32-14S-09E	43-007-30398	11256	STATE	GW	P
UTAH 33-201	33-14S-09E	43-007-30386	11256	STATE	GW	P
UTAH 33-202	33-14S-09E	43-007-30387	11256	STATE	GW	P
UTAH 33-203	33-14S-09E	43-007-30388	11256	STATE	GW	P
UTAH 33-204	33-14S-09E	43-007-30389	11256	STATE	GW	P
UTAH 34-211	34-14S-09E	43-007-30114	11256	STATE	GW	P
UTAH 34-9-32	34-14S-09E	43-007-30195	11256	STATE	GW	P
UTAH 34-1-31	34-14S-09E	43-007-30196	11256	STATE	GW	P
UTAH 35-1-9	35-14S-09E	43-007-30180	11256	STATE	GW	P
UTAH 35-10-27	35-14S-09E	43-007-30197	11256	STATE	GW	P
UTAH 35-13-28	35-14S-09E	43-007-30198	11256	STATE	GW	P
UTAH 35-3-26	35-14S-09E	43-007-30203	11256	STATE	GW	P

OPERATOR CHANGES DOCUMENTATION

Enter date after each listed item is completed

1. (R649-8-10) Sundry or legal documentation was received from the **FORMER** operator on: 01/08/2003
2. (R649-8-10) Sundry or legal documentation was received from the **NEW** operator on: 01/08/2003
3. The new company has been checked through the **Department of Commerce, Division of Corporations Database on:** 02/03/2003
4. Is the new operator registered in the State of Utah: YES Business Number: 562960-0143
5. If **NO**, the operator was contacted contacted on: _____

6. (R649-9-2)Waste Management Plan has been received on: IN PLACE

7. **Federal and Indian Lease Wells:** The BLM and or the BIA has approved the merger, name change, or operator change for all wells listed on Federal or Indian leases on: 01/14/2003

8. **Federal and Indian Units:**
The BLM or BIA has approved the successor of unit operator for wells listed on: 01/14/2003

9. **Federal and Indian Communization Agreements ("CA"):**
The BLM or BIA has approved the operator for all wells listed within a CA on: 01/14/2003

10. **Underground Injection Control ("UIC")** The Division has approved UIC Form 5, **Transfer of Authority to Inject,** for the enhanced/secondary recovery unit/project for the water disposal well(s) listed on: N/A

DATA ENTRY:

1. Changes entered in the **Oil and Gas Database on:** 02/07/2003
2. Changes have been entered on the **Monthly Operator Change Spread Sheet on:** 02/07/2003
3. Bond information entered in RBDMS on: N/A
4. Fee wells attached to bond in RBDMS on: N/A

STATE WELL(S) BOND VERIFICATION:

1. State well(s) covered by Bond Number: 8140-60-24

FEDERAL WELL(S) BOND VERIFICATION:

1. Federal well(s) covered by Bond Number: 8015-16-69

INDIAN WELL(S) BOND VERIFICATION:

1. Indian well(s) covered by Bond Number: N/A

FEE WELL(S) BOND VERIFICATION:

1. (R649-3-1) The **NEW** operator of any fee well(s) listed covered by Bond Number 6196922

2. The **FORMER** operator has requested a release of liability from their bond on: N/A
The Division sent response by letter on: N/A

LEASE INTEREST OWNER NOTIFICATION:

3. (R649-2-10) The **FORMER** operator of the fee wells has been contacted and informed by a letter from the Division of their responsibility to notify all interest owners of this change on: N/A

COMMENTS:

FORM 9

STATE OF UTAH

DIVISION OF OIL, GAS AND MINING

ORIGINAL

SUNDRY NOTICES AND REPORTS ON WELLS

Do not use this form for proposals to drill new wells, deepen existing wells, or to reenter plugged and abandoned wells.
Use APPLICATION FOR PERMIT TO DRILL OR DEEPEN form for such proposals.

5. Lease Designation and Serial Number: Ml-48233

6. If Indian, Allottee or Tribe Name: N/A

7. Unit Agreement Name: UTU67921X Drunkards Wash

1. Type of Well: OIL ☐ GAS ☒ OTHER:

8. Well Name and Number: UT 31-199

2. Name of Operator: ConocoPhillips Company

9. API Well Number: 43-007-30480

3. Address and Telephone Number: 6825 South 5300 West, P.O. Box 851, Price, UT 84501 (435) 613-9777

10. Field or Pool, or Wildcat: Drunkards Wash

4. Location of Well
Footages: 1125' FSL & 928' FWL
QQ, Sec., T., R., M.: SW/SW, SEC.31, T14S, R09E, SLB & M
County: Carbon County
State: Utah

11. CHECK APPROPRIATE BOXES TO INDICATE NATURE OF NOTICE, REPORT, OR OTHER DATA

NOTICE OF INTENT
(Submit in Duplicate)

- ☐ Abandon
- ☐ Repair Casing
- ☐ Change of Plans
- ☐ Convert to Injection
- ☐ Fracture Treat or Acidize
- ☐ Multiple Completion
- ☐ Other
- ☐ New Construction
- ☐ Pull or Alter Csg
- ☐ Recomplete
- ☐ Reperforate
- ☐ Vent or Flare
- ☐ Water Shut-Off

Approximate date work will start

SUBSEQUENT REPORT
(Submit Original Form Only)

- ☐ Abandon *
- ☐ Repair Casing
- ☐ Change of Plans
- ☐ Convert to Injection
- ☐ Fracture Treat or Acidize
- ☒ Other Chemical/Flush Treatment
- ☐ New Construction
- ☐ Pull or Alter Csg
- ☐ Reperforate
- ☐ Vent or Flare
- ☐ Water Shut-Off

Date of work completion 07/20/05

Report results of Multiple Completions and Recompletions to different reservoirs on WELL COMPLETION OR RECOMPLETION REPORT AND LOG form.

* Must be accompanied by a cement verification report.

12. DESCRIBE PROPOSED OR COMPLETED OPERATIONS (Clearly state all pertinent details, and give pertinent dates. If well is directionally drilled, give subsurface locations and measured and true vertical depths for all markers and zones pertinent to this work.)

Please be advised that the above referenced well was chemically treated with 55 gallons of low Ph fluid & 250 gallons of 15% HCL on 07/20/2005.

13.

Name & Signature: Lynnette Allred *Lallred* Title: Sr. Operations Assistant Date: 08/02/2005

(This space for state use only)

RECEIVED
AUG 11 2005
DIV. OF OIL, GAS & MINING

(4/94) (See Instructions on Reverse Side)