Form 3160-3
(December 1990)

SUBMIT IN TRIPLICATE*
(Other instructions on reverse side)

Form approved.
Budget Bureau No. 1004-0136
Expires: December 31, 1991

UNITED STATES
DEPARTMENT OF THE INTERIOR
BUREAU OF LAND MANAGEMENT

# APPLICATION FOR PERMIT TO DRILL OR DEEPEN

5. LEASE DESIGNATION AND SERIAL NO.
~~UTU-61155~~ ML-48187

6. IF INDIAN, ALLOTTEE OR TRIBE NAME
N/A

7. UNIT AGREEMENT NAME
N/A

8. FARM OR LEASE NAME, WELL NO.
~~USA~~ Utah 1-209

9. API WELL NO.

10. FIELD AND POOL, OR WILDCAT
Undesignated

11. SEC., T., R., M., OR BLK. AND SURVEY OR AREA
NE/4,SE/4, Sec.1, T15S, R8E, SLB&M

12. COUNTY OR PARISH: CARBON
13. STATE: UTAH

1a. TYPE OF WORK
DRILL [X] DEEPEN [ ]

b. TYPE OF WELL
OIL WELL [ ] GAS WELL [X] OTHER SINGLE ZONE [X] MULTIPLE ZONE [ ]

2. NAME OF OPERATOR
River Gas Corp.

3. ADDRESS AND TELEPHONE NO.
1305 So. 100 E. Price, Utah 84501 (801) 637-8876

4. LOCATION OF WELL (Report location clearly and in accordance with any State requirements.*)
At surface 2271' FSL, 1251' FEL
At proposed prod. zone 692

CONFIDENTIAL

14. DISTANCE IN MILES AND DIRECTION FROM NEAREST TOWN OR POST OFFICE*
9.4 miles southwest of Price

15. DISTANCE FROM PROPOSED* LOCATION TO NEAREST PROPERTY OR LEASE LINE, FT. (Also to nearest drig. unit line, if any): 1251'

16. NO. OF ACRES IN LEASE: 2372.22 acres

17. NO. OF ACRES ASSIGNED TO THIS WELL: 160 acres

18. DISTANCE FROM PROPOSED LOCATION TO NEAREST WELL, DRILLING, COMPLETED, OR APPLIED FOR, ON THIS LEASE, FT.: 1900'

19. PROPOSED DEPTH: 4220'

20. ROTARY OR CABLE TOOLS: Rotary

21. ELEVATIONS (Show whether DF, RT, GR, etc.)
GR 6815'

22. APPROX. DATE WORK WILL START*
September 1998

23. PROPOSED CASING AND CEMENTING PROGRAM

| SIZE OF HOLE | GRADE, SIZE OF CASING | WEIGHT PER FOOT | SETTING DEPTH | QUANTITY OF CEMENT |
|---|---|---|---|---|
| 14" | 12-3/4" | Conductor | 25' | |
| 11" | 8-5/8" | 24 #/ft | 422' | 149 sks. Class G+2%CaCl +1/4# per sack flocel |
| 7- 7/8" | 5-1/2" | 17 #/ft | 4220' | 343sks 50/50 poz + 8% gel + 2% CaCl + 10% extender .75 sks "G" thixotropic |

502562.9
4374131.5

RECEIVED
AUG 12 1998
DIV. OF OIL, GAS & MINING

IN ABOVE SPACE DESCRIBE PROPOSED PROGRAM: If proposal is to deepen, give data present productive zone and proposed new productive zone. If proposal is to drill or deepen directionally, give pertinent data on subsurface locations and measured and true vertical depths. Give blowout preventer program, if any.

24.

SIGNED Don S. Hamilton TITLE Permit Specialist DATE August 5, 1998

(This space for Federal or State office use)

PERMIT NO. 43-007-30467 APPROVAL DATE

Application approval does not warrant or certify that the applicant holds legal or equitable title to those rights in the subject lease which would entitle the applicant to conduct operations thereon.
CONDITIONS OF APPROVAL, IF ANY:

APPROVED BY Bradley G. Hill TITLE BRADLEY G. HILL RECLAMATION SPECIALIST III DATE 4/20/99

*See Instructions On Reverse Side

Title 18 U.S.C. Section 1001, makes it a crime for any person knowingly and willfully to make to any department or agency or the United States any false, fictitious or fraudulent statements or representations as to any matter within its jurisdiction.

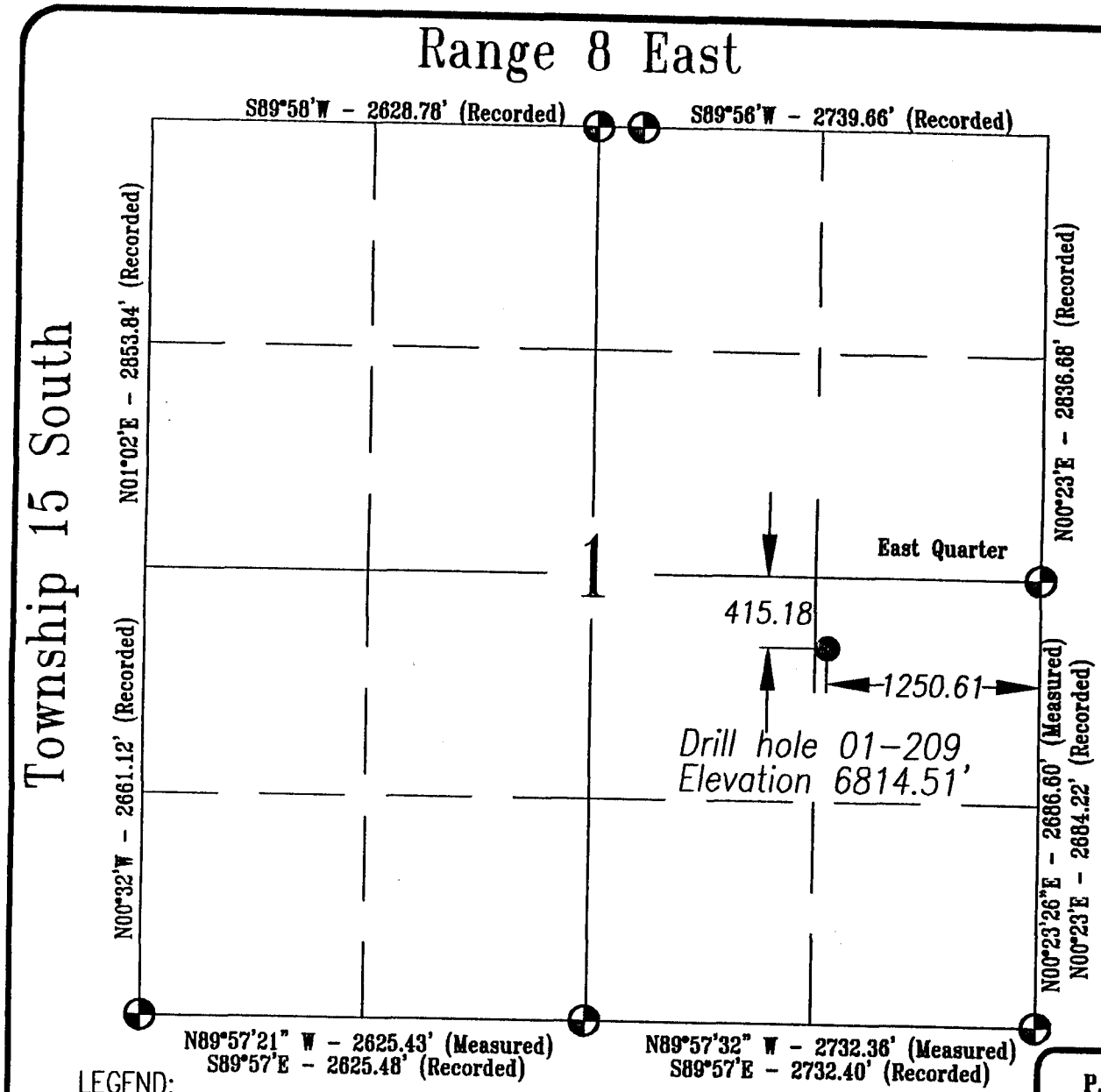


## Basis of Bearing:

*Basis of Bearing N02°13'W Recorded between the NW Corner and the West quarter corner of Section 11, Township 15 South, Range 8 East, Salt Lake Base & Meridian.*

## Basis Of Elevation:

*Basis of Elevation of 7160' as indicated in the NW Corner of Section 11, Township 15 South, Range 8 East, Salt Lake Base and Meridian, as shown on the Wattis Quadrangle 7.5 Minute Series Map.*

## Description of Location:

*Proposed Drill Hole located in the NE 1/4 SE 1/4 of Section 1; 415.18' South and 1250.61' West from the East quarter corner of Section 1, T15S, R8E, Salt Lake Base & Meridian.*

## Surveyor's Certificate:

**I, Daniel W. Peatross, a Registered Licensed Land Surveyor, holding Certificate #259966, State of Utah, do hereby certify that the information on this drawing is true and accurate to the best of my knowledge and belief, and was conducted by myself, as shown hereon.**

Registered Land Surveyor
No. 259966
Daniel W. Peatross
State of Utah

Daniel W. Peatross

7-22-98

LEGEND:

- ● *Drill Hole Location*
- ⊕ *Found Section Corner Monumented w/ Brass Cap unless indicated otherwise.*
- ○ *Section Corner searched for but not found*

SCALE:

250' 0' 500' 1000'

| | |
|---|---|
| DRAWN BY: P. BOYLEN | Castle Valley Services<br>3266 South 125 West<br>Price, Utah 84501<br>(801) 637-9300<br>FAX (801) 637-2833 |
| CHECKED BY: L.W.J. | |
| DATE: 7/20/98 | |
| SCALE: 1"=1000' | |
| JOB NO. 409 | River Gas Corporation<br>Well# 1-209<br>Section 1, T15S, R8E, S.L.B.&M.<br>Carbon County, Utah |
| DRAWING NO. A-1 | |
| SHEET 1 OF 4 | |

RGC

RIVER GAS CORPORATION
UTAH OPERATIONS
1305 South 100 East
Price, Utah 84501
Bus. (435) 637-8876
FAX (435) 637-8924

CONFIDENTIAL
COPY

August 6, 1998

RECEIVED
AUG 12 1998
DIV. OF OIL, GAS & MINING

Mr. Eric Jones
Petroleum Engineer
Bureau of Land Management
82 E. Dogwood
Moab, Utah 84532

RE: Application for Permit to Drill-
USA 01-209, NE/4,SE/4, Sect.1
T15S, R8E, SLB & M, Carbon County, Utah

Dear Eric:

Enclosed is the original of the *Application for Permit to Drill* (APD) and a Sundry Notice (requesting exception to spacing) for the above named well. Included with the APD is the following information:

Exhibit "A"- Survey plat of the proposed well site;

Exhibit "B" - Proposed Location Map with Pipeline, Power, and Road Access;

Exhibit "C" - Drilling Site Layout;

Exhibit "D" - On-site Inspection Checklist;

Exhibit "E" - Production Site Layout;

Exhibit "F" - Typical Road Cross-section;

Exhibit "G" - BOP Diagram;

Exhibit "H" - Typical Wellhead Manifold;

Please accept this letter as River Gas Corporation's written request for confidential treatment of all information contained in and pertaining to this permit application, if said information is eligible for such consideration.

Thank you very much for your timely consideration of this application. Please feel free to contact me if you have any questions.

Sincerely,

Don S. Hamilton

Don S. Hamilton
Permit Specialist

cc: Mr. Don Stephens, BLM, Price, Utah
Mr. Chuck Snure, Texaco
Mr. R.A. Lamarre, Texaco
Mr. Gee Lake, Jr., Dominion Resources
Mr. John Baza, DOGM
Mrs. Tammie Butts, River Gas Corporation
RGC Well File

Form 3160-5
(June 1990)

UNITED STATES
DEPARTMENT OF THE INTERIOR
BUREAU OF LAND MANAGEMENT

FORM APPROVED
Budget Bureau No. 1004-0135
Expires: March 31, 1993

# SUNDRY NOTICES AND REPORTS ON WELLS

Do not use this form for proposals to drill or to deepen or reentry to a different reservoir.
Use "APPLICATION FOR PERMIT--" for such proposals

*SUBMIT IN TRIPLICATE*

5. Lease Designation and Serial No.
UTU-61155

6. If Indian, Allottee or Tribe Name
N/A

7. If Unit or CA, Agreement Designation
N/A

1. Type of Well
☐ Oil Well ☒ Gas Well ☐ Other

8. Well Name and No.
USA 1-209

2. Name of Operator
River Gas Corporation

9. API Well No.

3. Address and Telephone No.
1305 South 100 East Price, Utah 84501 (801)637-8876

10. Field and Pool, or Exploratory Area
Undesignated

4. Location of Well (Footage, Sec.,T., R:, M., or Survey Description)
2271' FSL,1251' FEL
NE/4, SE/4, Sec.1, T15S, R8E,SLB&M

11. County or Parish, State
Carbon County, Utah

12. **CHECK APPROPRIATE BOX(s) TO INDICATE NATURE OF NOTICE, REPORT, OR OTHER DATA**

| TYPE OF SUBMISSION | TYPE OF ACTION | |
|---|---|---|
| ☐ Notice of Intent | ☐ Abandonment | ☐ Change of Plans |
| ☐ Subsequent Report | ☐ Recompletion | ☐ New Construction |
| ☐ Final Abandonment Notice | ☐ Plugging Back | ☐ Non-Routine Fracturing |
| | ☐ Casing Repair | ☐ Water Shut-Off |
| | ☐ Altering Casing | ☐ Conversion to Injection |
| | ☐ Other _____ | ☐ Dispose Water |
| | | (Note: Report results of multiple completion on Well Completion or |

13. Describe Proposed or Completed Operations ( Clearly state all pertinent details, and give pertinent dates, including estimated date of starting any proposed work. If well is directionally drilled, give subsurface locations and measured and true vertical depths for all markers and zones pertinent to this work.)*

Request for exception to the state spacing rule based on surface & mineral owners request.

14. I hereby certify that the foregoing is true and correct

Signed Don S. Hamilton Title Permit Specialist Date 8/5/98

(This space for Federal or State office use)

Approved by _____ Title _____ Date _____
Conditions of approval, if any:

Title 18 U.S.C. Section 1001, makes it a crime for any person knowingly and willfully to make to any department or agency of the United States any false, fictitious or fraudulent statements or representations as to any matter within its jurisdiction.

*** See Instructions on Reverse Side**

UT-060-3160-1
December, 1992

Bureau of Land Management
Moab District
Application for Permit to Drill
On-Site Inspection Checklist

Company River Gas Corporation Well No. 1-209

Location: Sec. 01, T 15 S, R 8 E, Lease No. UTU-61155

On-Site Inspection Date: 6-25-98

All operations will be conducted in such a manner that full compliance is made with applicable laws, regulations (43 CFR 3100), Onshore Oil and Gas Orders, the approved plan of operations and the conditions of approval. The operator is fully responsible for the actions of his subcontractors. A copy of these conditions will be furnished to the field representative to ensure compliance.

A. DRILLING PROGRAM

1. Surface Formation and Estimated Formation Tops:
   Surface formation: Upper Mancos Shale
   Estimated top of Ferron Formation: 3,300'

2. Estimated Depth at Which Oil, Gas, Water or Other Mineral Bearing Zones are Expected to be Encountered

| | Depth | Formation |
|---|---|---|
| Expected Oil Zones: none | | |
| Expected Gas Zones: Ferron Coal Interval: 3,330'-3,480' | | |
| Expected Water Zones: 3,330'-3,480' | | |
| Expected Mineral Zones: none | | |

All fresh water and prospectively valuable minerals encountered during drilling will be recorded by depth and will be cased and cemented. When possible, water flow rates will be measured and samples will be taken and analyzed. All oil and gas shows will be tested to determine commercial potential.

3. Pressure Control Equipment- include schematics of the BOP and choke manifold, and describe testing procedures: Quick Test is contracted to test the manifold, blind rams, and B.O.P to 2000 psi. Surface casing is tested to 1 psi/ft. See attachment.

   BOP systems will be consistent with API RP 53 and Onshore Oil and Gas Order No. 2. Pressure tests of the surface casing and all BOP equipment potentially subject to pressure will be conducted before drilling the surface casing shoe. Blowout preventer controls will be installed prior to drilling the surface casing shoe and will remain in use until the well is completed or abandoned. Ram preventers shall be inspected and operated each trip (no more than once a day is necessary), and annular preventers shall be inspected and operated weekly to ensure good mechanical working order. These inspections shall be recorded in the drilling log and in the daily drilling report.

4. Casing Program and Auxiliary Equipment - include casing size, weight, grade, thread and coupling, setting depth and condition (new or acceptably reconditioned): Approximately 4220' of 5 ½",17#/ft,N-80,LT&C production casing and approximately 10% of the above setting depth will be 8 5/8", 24#/ft J-55 surface casing.

5. Cement-include the cement type, density, yield, additives and amount used in setting each casing string. Also include the anticipated cement fill-up. If stage cementing, describe techniques: See cement design.

6. Mud Program and Circulating Medium- include mud components and weights. When air drilling, also include: length and location of blooie line; description of the auto ignitor; description of the deduster equipment; and amounts, types and characteristics of stand-by mud: Hole will be drilled with air.

7. Coring, Logging and Testing Program: Bulk Density, Gamma, Neutron Density, Resistivity and Caliper logs will be ran.
Initial opening of drill stem test tools will be restricted to daylight hours.

8. Abnormal Conditions, Bottom Hole Pressures and Potential Hazards- include anticipated bottomhole pressure and/or pressure gradient: No abnormal conditions are anticipated. Formation is slightly over-pressured. Estimated BHP: 1552 psi.

9. Any Other Aspects of this Proposal that should be Addressed:

B. THIRTEEN POINT SURFACE USE PLAN

The dirt contractor will be provided with an approved copy of the surface use plan of operations before initiating construction.

1. Existing Roads:

   a. Proposed route to location (submit a map depicting access and well location).

   b. Location of proposed well in relation to town or other reference point: 9.4 miles southwest of Price, Ut.

   c. Contact the County Road Department for use of county roads. The use of San Juan County roads will require an encroachment permit from the San Juan Road Department.

   d. Plans for improvement and/or maintenance of existing roads:

   e. Other:

2. Planned Access Roads:

   a. Location (centerline): Off of Utah 36-164 access approx:1820'FSL,750' FEL-Sect.36

   b. Length of new access top be constructed: none

   c. Length of existing roads to be upgraded: 6500'

   d. Maximum total disturbed width: 60'

   e. Maximum travel surface width: 25'

f. Maximum grades: 10%

g. Turnouts: N/A

h. Surface materials: In-place residual of Mancos Shale.

i. Drainage (crowning, ditching, culverts, etc): Roads will be crowned with bar ditches on both sides & 10 culverts placed along new road.

j. Cattleguards: N/A

k. Length of new and/or existing roads which lie outside the lease boundary for which a BLM right-of-way is required: N/A

l. Other:

Surface disturbance and vehicular travel will be limited to the approved location access road. Any additional area needed must be approved by the Area Manager advance.

If a right-a-way is necessary, no surface disturbing activities shall take place on the subject right-of-way until the associated APD is approved. The holder will adhere to conditions of approval in the Surface Use Program of the approved APD, relevant to any right-of-way facilities.

If a right-of-way is secured, boundary adjustments in the lease or unit shall automatically amend this right-of-way to include that portion of the facility no longer contained within the lease or unit. In the event of an automatic amendment to this right-of-way grant, the prioron-lease/unit conditions of approval of this facility will not be affected even though they would now apply to facilities outside of the lease/unit as a result of a boundary adjustment. Rental fees, if appropriate shall be recalculated based on the conditions of this grant and the regulations in effect at the time of an automatic amendment.

If the well is productive, the access road will be rehabilitated or brought to Resource (Class III) Road Standards within 60 days of dismantling the rig. If upgraded, the access road must be maintained at these standards until the well is properly abandoned. If this time frame cannot be met, the Area Manager will be notified so that temporary drainage control can be installed along the access road.

3. Location of Existing Wells-on a map, show the location of all water, injection, disposal, producing and drilling wells within a one mile radius of the proposed well, and describe the status of each: See Attachment "B"

4. Location of Production Facilities:

a. On-site facilities: See Attachment "E"

b. Off-site facilities: none

c. Pipelines: N/A

All permanent (in place for six months or longer) structures constructed or installed (including oil well pump jacks) will be painted a flat, nonreflective color to match the standard environmental colors, as determined by the Rocky Mountain Five-State Interagency Committee. All facilities will be painted within six months of installation. Facilities required

by comply with the Occupational Safety and Health Act (OSHA) may be excluded. Colors will be as follows:tan

All site security guidelines identified in 43 CFR § 3163.7-5 and Onshore Oil and Gas Order No. 3 Colors will be as follows: tan

If a gas meter run is constructed, it will be located on lease within 500 feet of the wellhead. The gas flowline will be buried from the wellhead to the meter and will be buried downstream of the meter until it leaves the pad. Meter runs will be housed and/or fenced. The gas meter shall be calibrated prior to first sales and shall be calibrated quarterly thereafter. All gas production and measurement shall comply with the provisions of 43 CFR § 3162. 7-3, Onshore Oil and Gas Order No. 5, and American Gas Association (AGA) Report No. 3.

If a tank battery is constructed on this lease, it will be surrounded by a dike of sufficient capacity to contain 1 ½ times the storage capacity of the largest tank. All loading lines and valves will be placed inside the berm surrounding the tank battery. All oil production and measurement shall conform to the provisions of 43 CFR § 3162.7-3 and Onshore Oil and Gas Order No. 4

Production facilities on location may include a lined or unlined produced water pit as specified in NTL-2B. If water is produced from the well, an NTL-2B application must be submitted.

5. Location and Type of Water Supply:

All water needed for drilling purposes will be obtained from (describe location and/or show on a map): PRWID

6. Source of Construction Material:

Pad construction material will be obtained from (if the source is Federally owned, show location on a map): Private owner in East Price.
The use of materials under BLM jurisdiction will conform to 43 CFR 3610.2-3.

7. Methods of Handling Waste Disposal:

Describe the methods and locations proposed for safe containment and disposal of waste material, e.g. cuttings, produced water, garbage, sewage, chemicals, etc.

The reserve pit will be lined with (native material, bentonite, synthetic material): Pit will be lined with native material unless designated otherwise by BLM officers prior to construction.

The reserve pit will be located: on the west end of the location,and the pit walls will be sloped at no greater than 2 to 1.

The reserve pit shall be located in cut material, with at least 50% of the pit volume being below original ground level. Three sides of the reserve pit will be fenced before drilling starts. The fourth side will be fenced as soon as drilling is completed, and shall remain until the pit is dry. As soon as the reserve pit has dried, all areas not needed for production will be rehabilitated.

Trash must be contained in a trash cage and hauled away to an approved disposal site as necessary but no later than at the completion of drilling operations.

8. Ancillary Facilities: Garbage Containers and Portable Toilets.

9. Well Site Layout - depict the pit, rig, cut and fill, topsoil, etc. on a plat with a scale of at least 1" = 50'.

All well, whether drilling, producing, suspended, or abandoned, will be identified in accordance with 43 CFR 3162.6.

Access to the well pad will be from: North

The blooie line will be located: on the West end of the location,at least 100 feet from the well head.

To minimize the amount of fugitive dust and spray escaping from the blooie pit, the following blooie line deflection method will be employed: Water Injection.

10. Plans for Restoration of the Surface:

The top 6 inches of topsoil material will be removed from the location and stockpiled separately on: Adjacent land.

Topsoil along the access road will be reserved in place adjacent to the road.

Immediately upon completion of drilling, all equipment that is not necessary for production shall removed.

The reserve pit and that portion of the location not needed for production will be reclaimed.

Before any dirt work to restore the location takes place, the reserve pit must be completely dry.

Reclaimed roads will have the berms and cuts reduced and will be closed to vehicle use.

All disturbed areas will be recontoured to replicate the natural slope.

The stockpiled topsoil will be evenly distributed over the disturbed area.

Prior to reseeding, all disturbed areas, including the access roads, will be scarified and left with a rough surface.

Seed will be broadcast or drilled between Sept and Nov., or at a time specified by the BLM. If broadcast, a harrow or some other implement will be dragged over the seeded area to assure seed coverage.

The following seed mixture will be used:

BLM-recommended mixture.

The abandonment marker will be one of the following, as specified by BLM:

1) at least four feet above ground level,
2) at restored ground level, or

3) below ground level.

In any case the marker shall be inscribed with the following: operator name, lease number, well name and surveyed description (township, range, section and either quarter-quarter or footages).

Additional requirements:

11. Surface and Mineral Ownership: BLM

12. Other Information:

a. Archeological Concerns: None that RGC is aware of.

The operator is responsible for informing all persons in the area who are associated with this project that they will be subject to prosecution for knowingly disturbing historic or archaeological sites, or for collecting artifacts. If historic or archaeological materials are uncovered during construction, the operator is to immediately stop work that might further disturb such materials, and contact the authorized officer (AO). Within five (5) working days, the AO will inform the operator as to:

- whether the materials appear eligible for the National Register of Historic Places;

- the mitigation measures the operator will likely have to undertake before the site can be used (assuming in situ preservation is not necessary); and

- a time frame for the AO to complete an expedited review under 36 CFR 800.11 to confirm, through the State Historic Preservation Officer, that the findings of the AO are correct and that mitigation is appropriate.

If the operator wishes, at any time, to relocate activities to avoid the expense of mitigation and/or the delays associated with this process, the AO will assume responsibility for whatever recordation and stabilization of the exposed materials may be required. Otherwise, the operator will be responsible for mitigation costs. The AO will provide technical and procedural guidelines for the conduct of mitigation. Upon verification from the AO that the required mitigation has been completed, the operator will then be allowed to resume construction.

b. Threatened and Endangered Species Concerns: No

c. Wildlife Seasonal Restrictions (yes/no): See EIS

d. Off Location Geophysical Testing: N/A

e. Drainage crossings that require additional State or Federal approval: N/A

f. Other: N/A

13. Lessee's or Operator's Representative and Certification

Representative:

Name: Don S. Hamilton

Title: Permit Specialist

Address: 1305 South 100 East
Price, Utah 84501

Phone No: (435)637-8876

Certification:

I hereby certify that I, or persons under my direct supervision, have inspected the proposed drill site and access route; that I am familiar with the conditions which currently exists; that the statements make in this APD package are, to the best of my knowledge, true and correct; and that the work associated with the operations proposed herein will be performed by RGC and its contractors and subcontractors in conformity with this APD package and the terms and conditions under which it is approved. I also certify responsibility for the operations conducted on that portion of the leased lands associated with this application, with bond coverage being provided under BLM bond no. S304604. This statement is subject to the provisions of 18 U.S.C. 1001 for the filing of a false statement.

Don S. Hamilton
Signature

Permit Specialist
Title

August 6, 1998
Date

## C. REQUIRED APPROVALS, REPORTS AND NOTIFICATIONS

Required verbal notifications are summarized in Table 1, attached.

Building Location- Contact the Resource Area, Natural Resource Protection Specialist at least 24 hours prior to commencing construction of location.

Spud- The spud date will be reported to the Resource Area Office 24 hours prior to spudding. Written notification in the form of a Sundry Notice (Form 3160-5) will be submitted the District Office within 24 hours after spudding, regardless of whether spud was made with a dry hole digger or big rig.

Daily Drilling Reports- Daily drilling reports shall detail the progress and status of the well and shall be submitted to the District Office on a weekly basis.

Monthly Reports of Operations- In accordance with Onshore Oil and Gas Order No. 1, this well shall be reported on Minerals Management Service (MMS) Form 3160, "Monthly Report of Operations," starting the month in which operations commence and continuing each month until the well is physically plugged and abandoned. This report will be filed directly with MMS.

Sundry Notices- There will be no deviation from the proposed drilling and/or workover program without prior approval from the Assistant District Manager. "Sundry Notices and Reports on Wells: (Form 3160-5) will be filed for approval for all changes of plans and other operations in accordance with 43 CFR 3162.3-2. Safe drilling and operating practices must be observed.

Drilling Suspensions- Operations authorized by this permit shall not be suspended for more than 30 days without prior approval of the Authorized Officer. All conditions of this approval shall be applicable during any operations conducted with a replacement rig.

Undesirable Events- Spills, blowouts, fires, leaks, accidents, or any other unusual occurrences shall be immediately reported to the Resource Area in accordance with requirements of NTL-3A.

Cultural Resources- If cultural resources are discovered during construction, work that might disturb the resources is to stop, and the Area Manager is to be notified.

First Production- Should the well be successfully completed for production, the Assistant District Manager, Minerals Division will be notified when the well is placed in producing status. Such notification may be made by phone, but must be followed by a sundry notice or letter not later than five (5) business days following the date on which the well is placed into production.

A first production conference will be scheduled as soon as the productivity of the well is apparent. This conference should be coordinated through the Resource Area Office. The Resource Area Office shall be notified prior to the first sale.

Well Completion Report- Whether the well is completed as a dry hole or as a producer, "Well Completion and Recompletion Report and Log" (Form 3160-4) will be submitted to the District Office not later than thirty (30) days after completion of the well or after completion of operations being performed, in accordance with 43 CFR 3162.4-1. Two copies of all logs, core descriptions, core analysis, well test data, geologic summaries, sample description, and all other surveys or data obtained and compiled during the drilling, workover, and/or completion operations, will be filed with Form 3160-4. Samples (cuttings and/or samples) will be submitted when requested by the Assistant District Manager.

Venting/Flaring of Gas-NTL-4A allows venting/flaring of gas during the initial well evaluation period not to exceed 30 days or 50 MMcf. Venting/flaring beyond the initial test period threshold must be approved by the District Office.

Produced Water- Produced waste water may be confined to an unlined pit for a period not to exceed 90 days after initial production. During the 90 day period, an application for approval of a permanent disposal method and location, along with the required water anlysis, will be submitted to the Assistant District Manager for approval pursuant to NTL-2B.

Off-Lease Measurement, Storage, Commingling- Prior approval must be obtained from the Assistant District Manager for off-lease measurement, off-lease storage and/or commingling (either down-hole or at the surface).

Plugging and Abandonment- If the well is completed as a dry hole, plugging instructions must be obtained from the BLM, Moab District Office prior to initiating plugging operations. Table 1 of this document provides the after-hours phone numbers of personnel who are authorized to give plugging instructions.

A "Subsequent Report of Abandonment" (Form 3160-5) will be filed with the Assistant District Manager, Minerals Divisions within thirty (30) days following completion of the well for abandonment. This report will indicate where plugs were placed and the current status of surface restoration. Upon completion of approved plugging, a regulation marker will be erected in accordance with 43 CFR 3162.6. Final abandonment will not be approved until the surface reclamation work required by the approved APD or approved abandonment notice has been completed to the satisfaction of the Area Manager or his representative, or the appropriate surface managing agency.

TABLE 1
NOTIFICATIONS

Notify Don Stephens of the Price Resource Area, at (435)636-3608 for the following:

2 days prior to commencement of dirt work, construction or reclamation;

1 day prior to spudding;

50 feet prior to reaching surface and intermediate casing depths;

3 hours prior to testing BOPE;

12 hours prior to reaching kickoff point depth (if applicable).

If the person at the above number cannot be reached, notify the Moab District Office at (435) 259-6111. If unsuccessful, notify one of the people listed below.

Well abandonment operations require 24 hour advance notice and prior approval. In the case of newly drilled dry holes, verbal approval can be obtained by calling the Moab District Office, Branch of Fluid Minerals at (435) 259-6111. If approval is needed after work hours, you may contact the following:

| | |
|---|---|
| Eric Jones, Petroleum Engineer | Office: (435) 259-6111<br>Home: (435) 259-2214 |

If unable to reach the above individuals, please call:

| | |
|---|---|
| Lynn Jackson,<br>Chief, Branch of Fluid Minerals | Office: (435) 259-6111<br>Home: (435) 259-7990 |

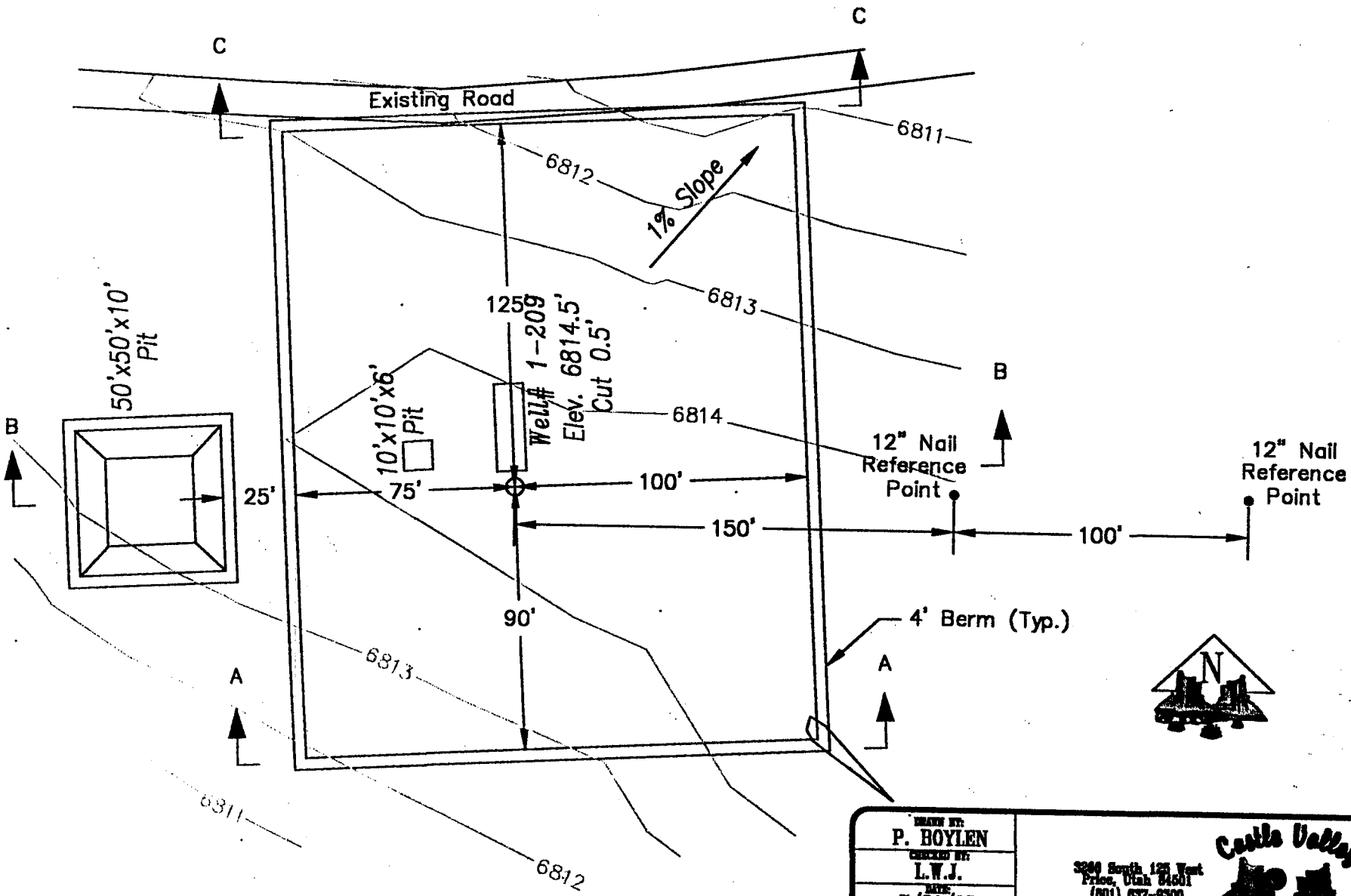


Elevation Ungraded Ground at Location Stake = 6814.5'
Elevation Graded Ground at Location Stake = 6814.0'

| | |
|---|---|
| DRAWN BY: P. BOYLEN | Castle Valley Services<br>3260 South 125 West<br>Price, Utah 84501<br>(801) 637-9300<br>FAX (801) 637-2833 |
| CHECKED BY: L.W.J. | |
| DATE: 7/31/98 | |
| SCALE: 1"=50' | |
| JOB NO. 409 | River Gas Corporation<br>Location Layout<br>Section 1, T15S, R8E, S.L.B.&M.<br>Well# 1-209 |
| DRAWING NO. A-2 | |
| SHEET 2 OF 4 | |

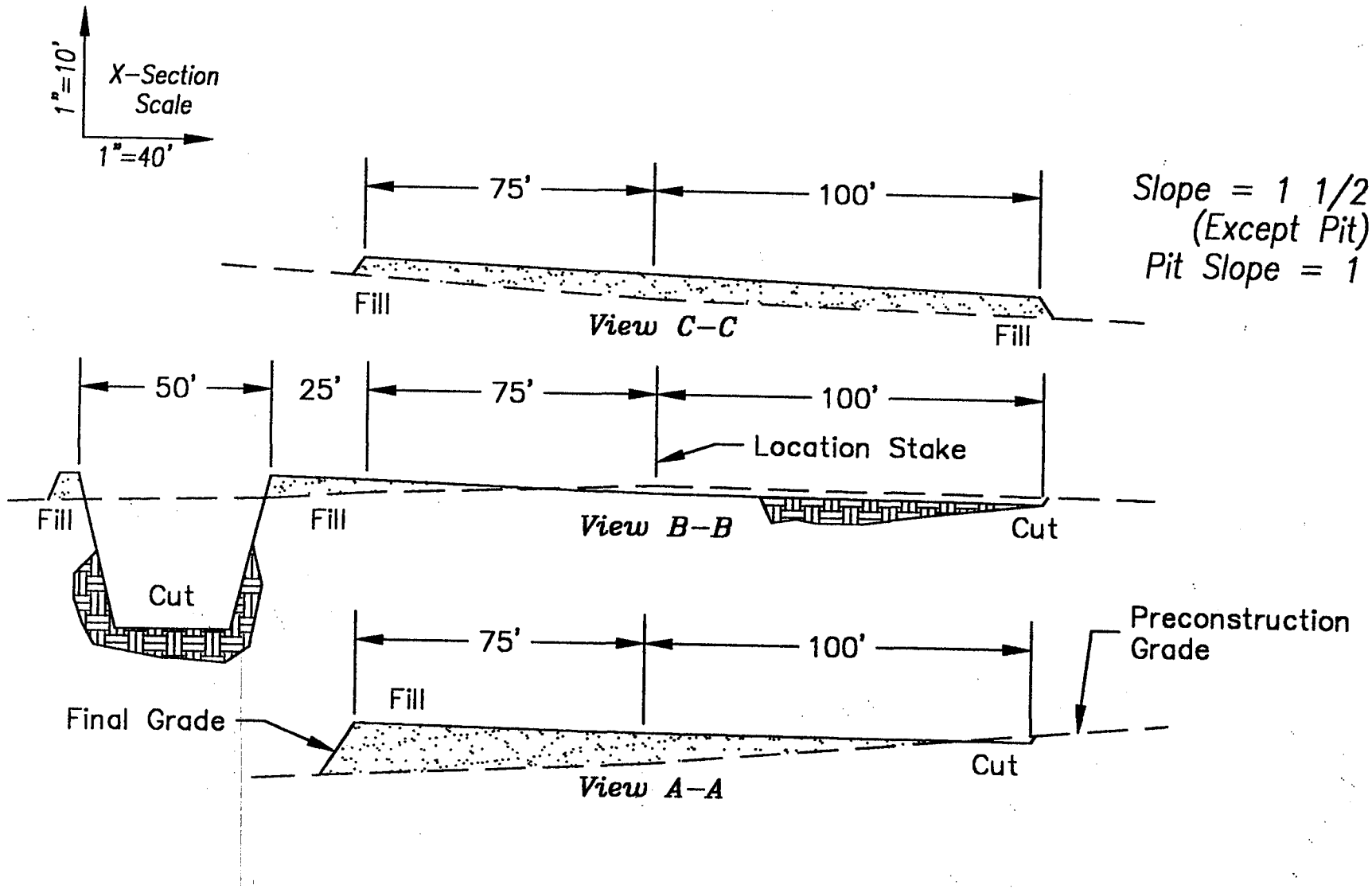


## APPROXIMATE YARDAGES

| | |
|---|---|
| CUT | |
| (6") Topsoil Stripping | = 750.0 Cu. Yds. |
| Remaining Location | = 485.8 Cu. Yds. |
| TOTAL CUT | = 1,235.8 Cu. Yds. |
| TOTAL FILL | = 1,133.5 Cu. Yds. |

| | |
|---|---|
| DRAWN BY: P. BOYLEN | Castle Valley Surveying, 3206 South 100 East, Price, Utah 84501, (801) 637-9300, FAX (801) 637-2333 |
| CHECKED BY: L.W.J. | |
| DATE: 7/31/98 | |
| SCALE: AsShown | |
| JOB NO. 409 | River Gas Corporation |
| DRAWING NO. C-1 | Typical Cross Sections |
| SHEET 3 of 4 | Section 1, T15S, R8E, S.L.B.&M. |
| | Well# 1-209 |

Exhibit "A" 3 of 3

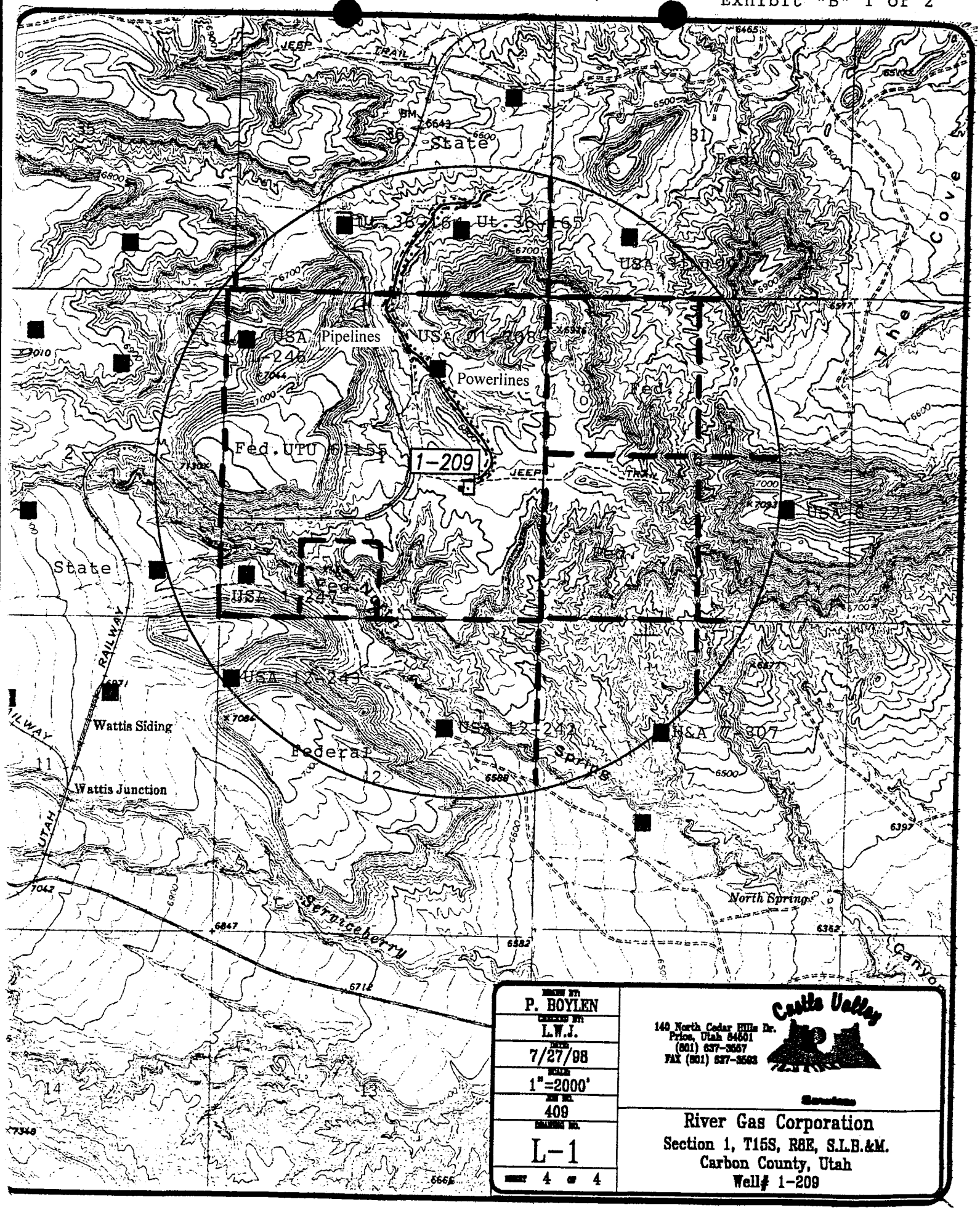


| | |
|---|---|
| DRAWN BY: P. BOYLEN | Castle Valley<br>140 North Cedar Hills Dr.<br>Price, Utah 84501<br>(801) 637-3557<br>FAX (801) 637-3563 |
| CHECKED BY: L.W.J. | |
| DATE: 7/27/98 | |
| SCALE: 1"=2000' | Sponsor: |
| JOB NO. 409 | River Gas Corporation<br>Section 1, T15S, R8E, S.L.B.&M.<br>Carbon County, Utah<br>Well# 1-209 |
| DRAWING NO. L-1 | |
| SHEET 4 OF 4 | |

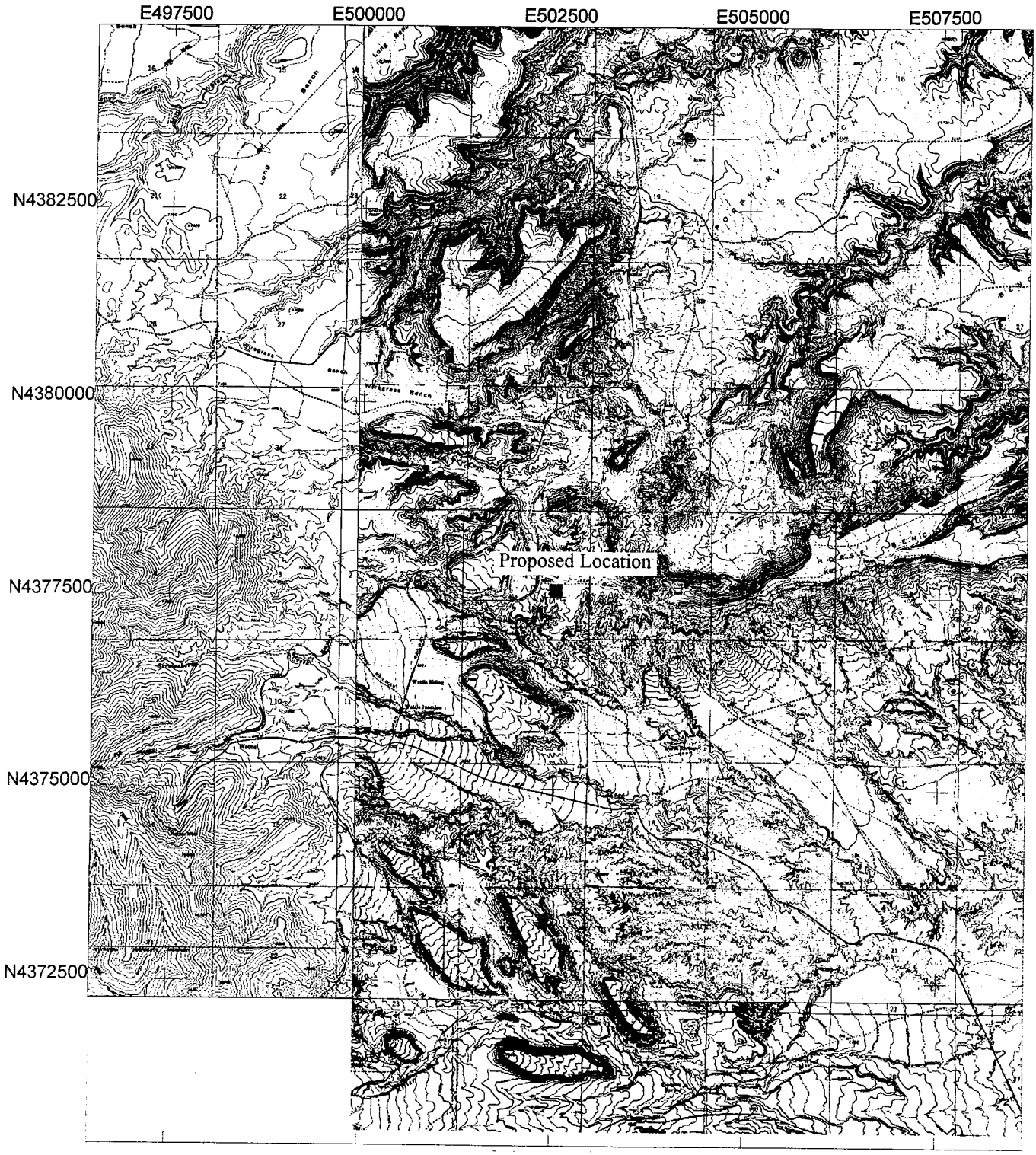


# USA 01-209

Universal Transverse Mercator
North 12
NAD83 (Conus)

N

Scale 1:75000
0 8000
Feet

8/5/1998
Pathfinder Office™

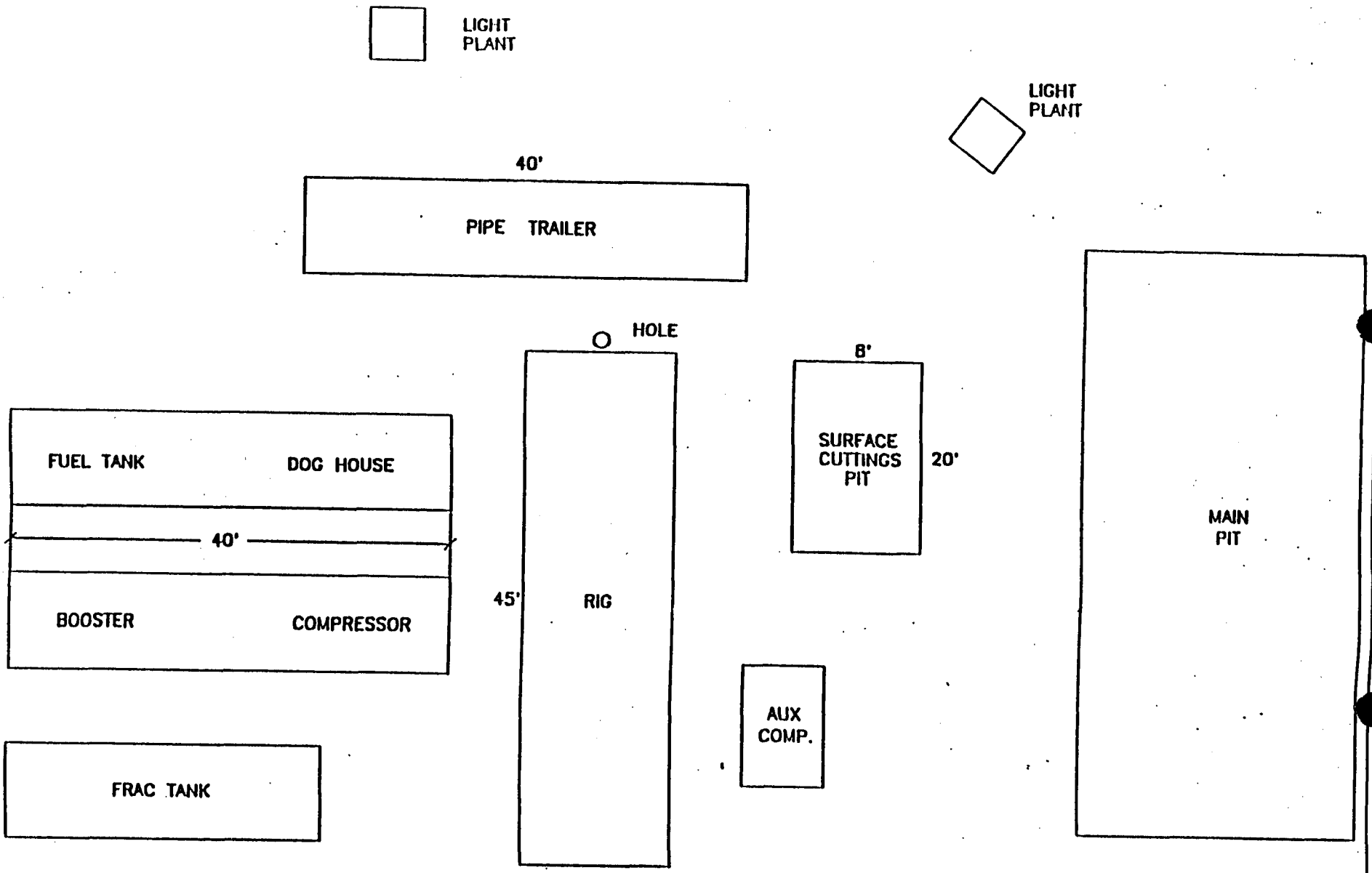


APPROXIMATE LAYOUT OF RIG & EQUIPMENT
( NOT TO SCALE )

Exhibit "C"

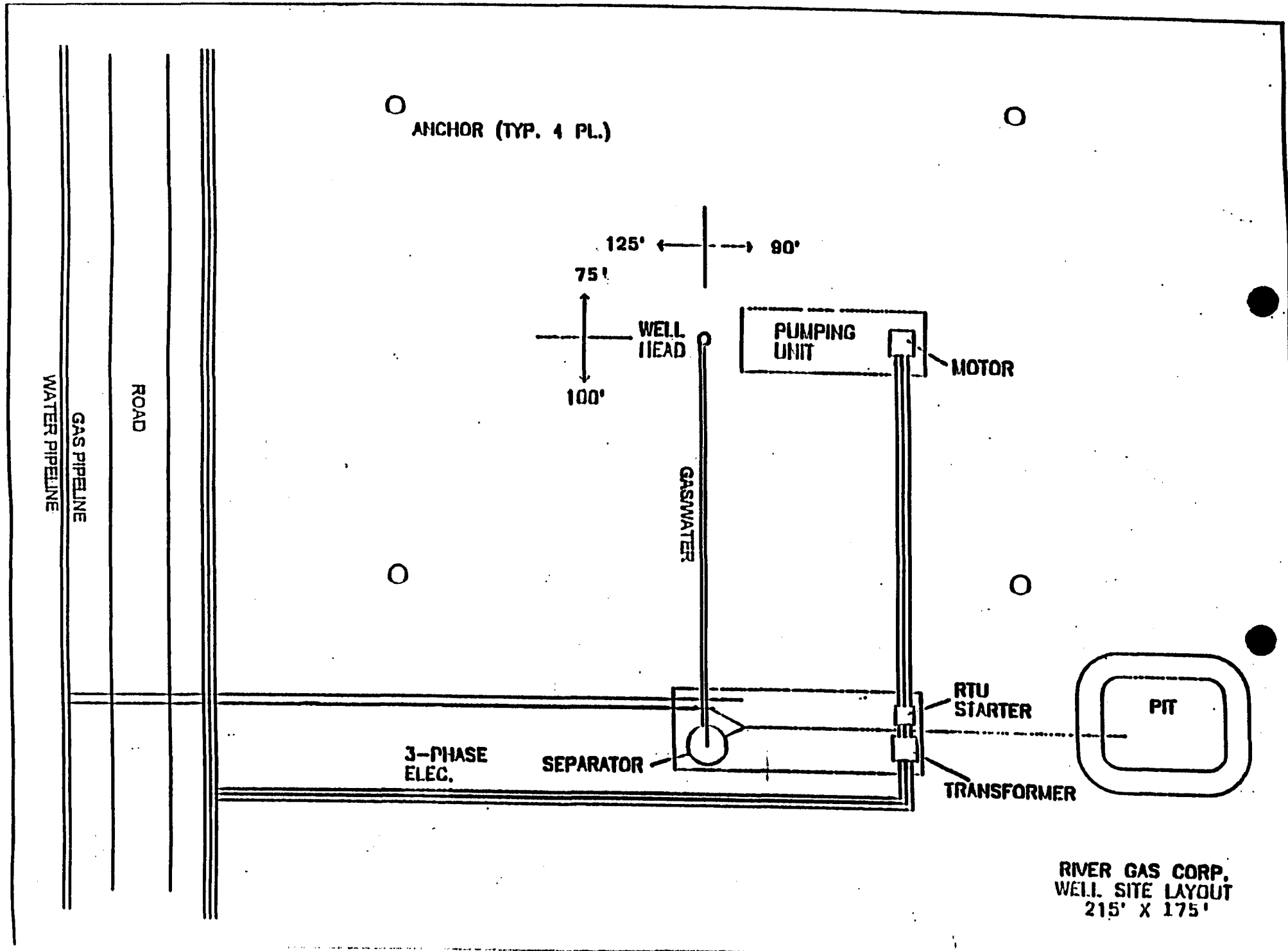
ANCHOR (TYP. 4 PL.)
125'
90'
75'
100'
WELL HEAD
PUMPING UNIT
MOTOR
GAS/WATER
RTU STARTER
PIT
3-PHASE ELEC.
SEPARATOR
TRANSFORMER
WATER PIPELINE
GAS PIPELINE
ROAD
RIVER GAS CORP.
WELL SITE LAYOUT
215' X 175'

# RIVER GAS CORPORATION

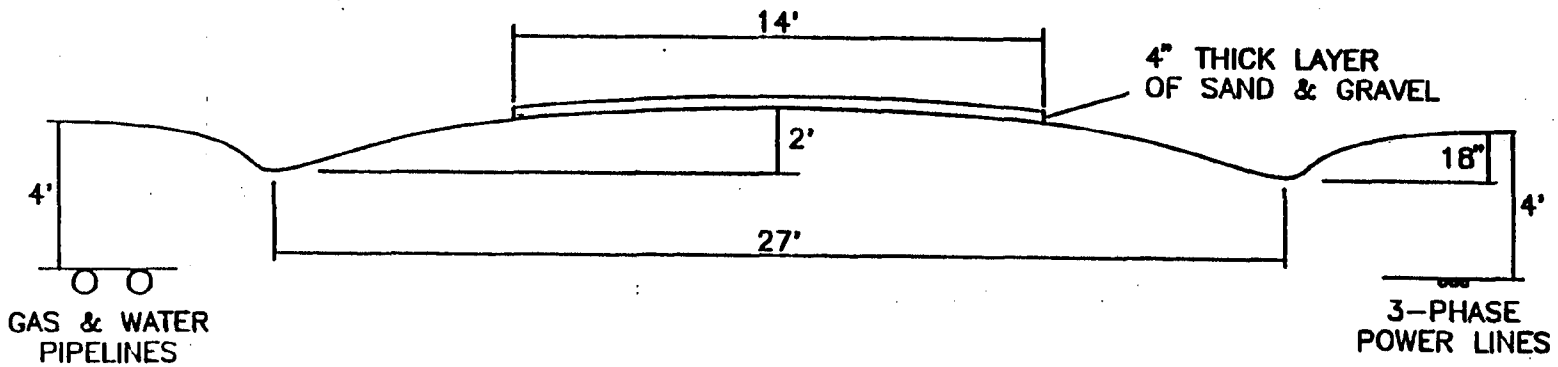


## TYPICAL ROAD CROSS-SECTION

NOT TO SCALE

# DIVERTER HEAD

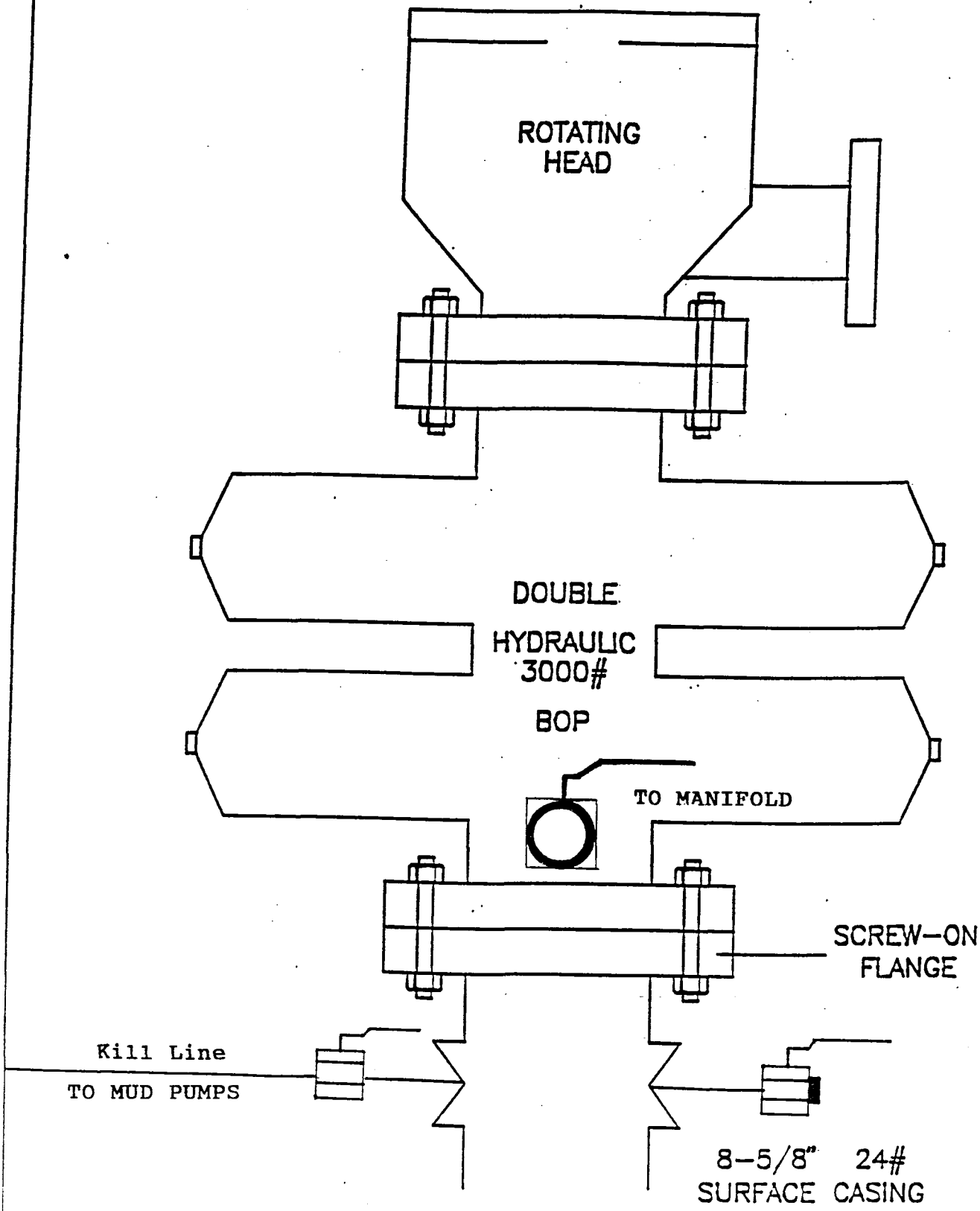


RIVER GAS CORP.

(1) 2" 5M FLANGED CHOKE
(2) 2" 5M GATE VALVE (FLANGED)
(3) 2" 5M STUDDED CROSS
(4) 2" 5M GATE VALVE (FLANGED)
(5) 2" 5M FLANGED CHOKE
(6) 2" 5M GATE VALVE (FLANGED)
(7) 2" LINE
(8) 2" 5M GATE VALVE (FLANGED)
(9) 3000# GAUGE

NOTE:
NUMBER 8 GATE VALVE SITS ON TOP OF MANIFOLD BETWEEN STUDDED CROSS AND 3000# GAUGE.

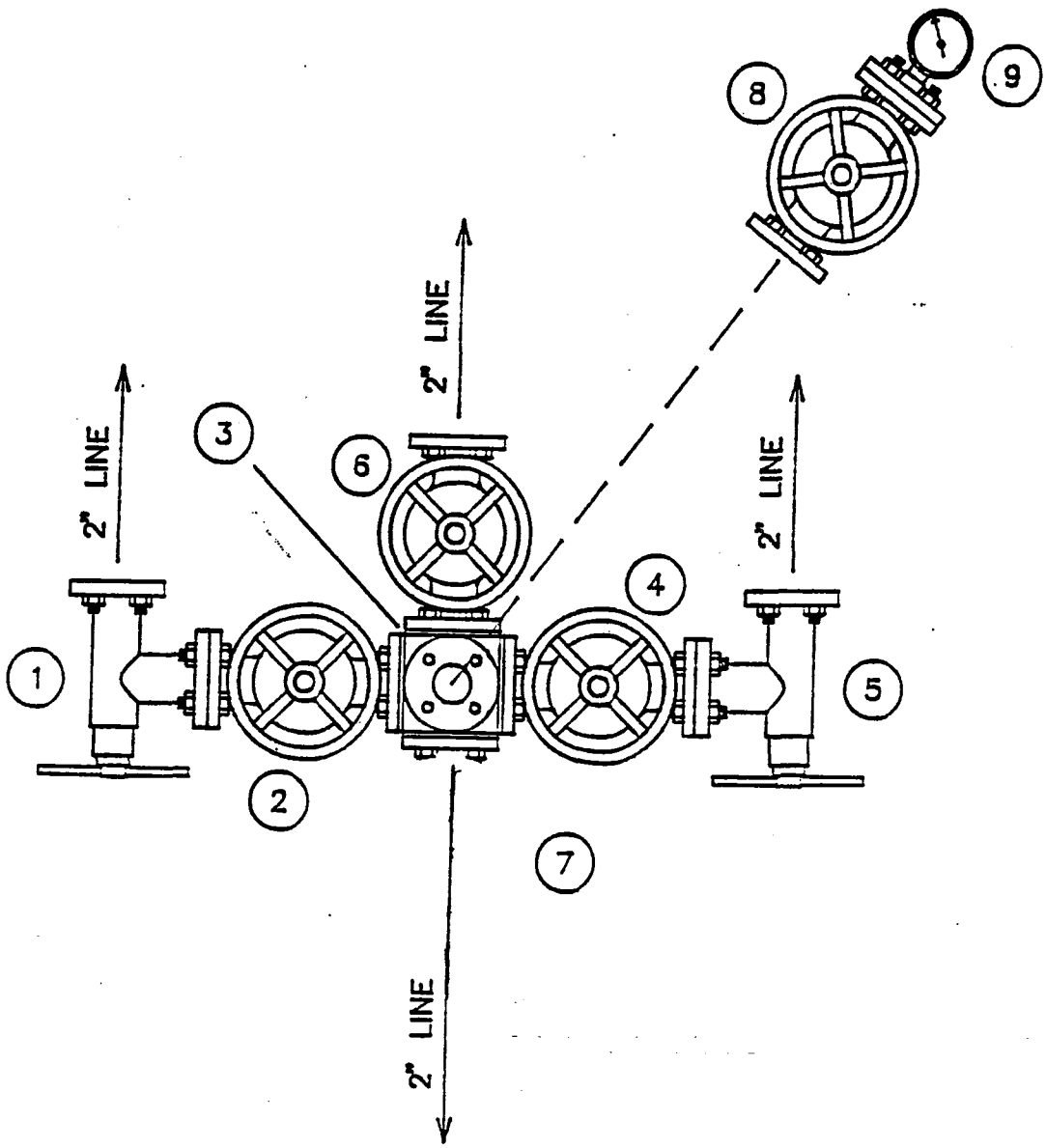


TO BOP

AND A NEW 2" BALL VALVE
FULL OPEN 5000PSI

# MANIFOLD

RIVER GAS CORP.

FORM 9

STATE OF UTAH

DIVISION OF OIL, GAS AND MINING

# SUNDRY NOTICES AND REPORTS ON WELLS

Do not use this form for proposals to drill new wells, deepen existing wells, or to reenter plugged and abandoned wells.
Use APPLICATION FOR PERMIT TO DRILL OR DEEPEN form for such proposals.

5. Lease Designation and Serial Number: UTU 61155

6. If Indian, Allottee or Tribe Name: N/A

7. Unit Agreement Name: N/A

1. Type of Well: OIL ☐ GAS ☒ OTHER:

8. Well Name and Number: Utah 1-209

2. Name of Operator: River Gas Corporation

9. API Well Number:

3. Address and Telephone Number: 1305 South 100 East, Price, UT 84501 (435)637-8876

10. Field or Pool, or Wildcat: Undesignated

4. Location of Well

Footages: 2271' FSL, 1251' FEL

County: Carbon

QQ, Sec., T., R., M.: NE/4, SE/4, SEC. 01, T15S, R8E SLB&M

State: UTAH

11. **CHECK APPROPRIATE BOXES TO INDICATE NATURE OF NOTICE, REPORT, OR OTHER DATA**

**NOTICE OF INTENT**
**(Submit in Duplicate)**

- ☐ Abandon
- ☐ Repair Casing
- ☐ Change of Plans
- ☐ Convert to Injection
- ☐ Fracture Treat or Acidize
- ☐ Multiple Completion
- ☐ Other
- ☐ New Construction
- ☐ Pull or Alter Casing
- ☐ Recomplete
- ☐ Reperforate
- ☐ Vent or Flare
- ☐ Water Shut-Off

Approximate date work will start

**SUBSEQUENT REPORT**
**(Submit Original Form Only)**

- ☐ Abandon *
- ☐ Repair Casing
- ☐ Change of Plans
- ☐ Convert to Injection
- ☐ Fracture Treat or Acidize
- ☒ Other Name Change
- ☐ New Construction
- ☐ Pull or Alter Casing
- ☐ Reperforate
- ☐ Vent or Flare
- ☐ Water Shut-Off

Date of work completion

Report results of Multiple Completions and Recompletions to different reservoirs on WELL COMPLETION OR RECOMPLETION REPORT AND LOG form.

12. DESCRIBE PROPOSED OR COMPLETED OPERATIONS (Clearly state all pertinent details, and give pertinent dates. If well is directionally drilled, give subsurface locations and measured and true vertical depths for all markers and zones pertinent to this work.)

Notice of Well Name Change from the USA 01-209 to the Utah 01-209 and lease change from Federal to State due to the recent Land Exchange.

ORIGINAL

CONFIDENTIAL

13.

Name & Signature: Dawn J Wilson

Title: Administrative Asst.

Date: 1/18/99

(This space for state use only)

(4/94)

(See Instructions on Reverse Side)

River Gas Corporation

1305 South 100 East
Price, Utah 84501-9637
(435) 637-8876
(435) 637-8924

# RGC

To: Lisha Cordova

From: Don Hamilton

Fax: 1-801-359-3940

Pages: 2

Phone:

Date: 3-2-99

Re: Updated Land Swap Leases

CC:

☐ Urgent ☐ For Your Review ☐ FYI ☐ Please Reply ☐ Please Recycle

*From the Desk of.....*
*Don S. Hamilton -*
*Permit Specialist*

**FEDERAL LEASES INVOLVED IN THE TRANSFER FROM FED. TO STATE**

UTU#16172 - NEW ML#48174 - RGC L#UT001-095
UTU#49631 - NEW ML#48177 - RGC L#UT001-007FO
UTU#49931 - NEW ML#48178 - RGC L#UT001-026FO
UTU#50646 - NEW ML#48179 - RGC L#UT001-030FO
UTU#50941 - NEW ML#48180 - RGC L#UT001-033FO
UTU#51584 - NEW ML#48181 - RGC L#UT001-099FO
UTU#53872 - NEW ML#48182 - RGC L#UT001-135FO

UTU#60925 - NEW ML#48185 - RGC L#UT001-062AFO - 40.00 ACRES TRANSFERRED
UTU#60925 - NO NEW ML# - RGC L#UT001-062FO - 40.00 ACRES REMAIN

UTU#61154 - NEW ML#48186 - RGC L#UT001-071AFO - 640.00 ACRES TRANSFERRED
UTU#61154 - NO NEW ML# - RGC L#UT001-071FO - 4189.08 ACRES REMAIN

UTU#61155 - NEW ML#48187 - RGC L#UT001-070AFO - 632.58 ACRES TRANSFERRED
UTU#61155 - NO NEW ML# - RGC L#UT001-070FO - 1739.64 ACRES REMAIN

UTU#61156 - NEW ML#48188 - RGC L#UT001-073FO
UTU#62623 - NEW ML#48189 - RGC L#UT01-0108FO
UTU#65296 - NEW ML#48189 - RGC L#UT01-0124FO
UTU#65297 - NEW ML#48197 - RGC L#UT01-0125FO
UTU#65301 - NEW ML#48198 - RGC L#UT01-0126FO
UTU#65946 - NEW ML#48200 - RGC L#UT01-0133FO
UTU#68543 - NEW ML#48203 - RGC L#UT001-0022
UTU#69450 - NEW ML#48204 - RGC L#UT001-0028
UTU#69451 - NEW ML#48205 - RGC L#UT001-070
UTU#69452 - NEW ML#48206 - RGC L#UT001-0029
UTU#69453 - NEW ML#48207 - RGC L#UT001-0030
UTU#69454 - NEW ML#48208 - RGC L#UT001-071
UTU#72005 - NEW ML#48236 - RGC L#UT001-0230
UTU#72351 - NEW ML#48213 - RGC L#UT001-036
UTU#72378 - NEW ML#48215 - RGC L#UT001-041
UTU#72620 - NEW ML#48217 - RGC L#UT001-077
UTU#72624 - NEW ML#48219 - RGC L#UT001-076
UTU#72625 - NEW ML#48220 - RGC L#UT001-079
UTU#73003 - NEW ML#48222 - RGC L#UT001-093
UTU#73657 - NEW ML#48225 - RGC L#UT001-0201
UTU#73876 - NEW ML#48227 - RGC L#UT001-0152
UTU#75017 - NEW ML#48231 - RGC L#UT01-0124AFO
UTU#76333 - NEW ML#48233 - RGC L#UT001-0032A
UTU#77350 - NEW ML#48234 - RGC L#UT01-0125AFO
UTU#77352 - NEW ML#48235 - RGC L#UT001-093A

RECEIVED
MAR 2 1999
DIV OF OIL, GAS & MINING

RGC

RIVER GAS CORPORATION
UTAH OPERATIONS
1305 South 100 East
Price, Utah 84501
Bus. (435) 637-8876
FAX (435) 637-8924

ORIGINAL

CONFIDENTIAL

February 25, 1999

Mr. John Baza
Associate Director
Division of Oil, Gas and Mining
1594 West North Temple, Suite 1210
Salt Lake City, Utah 84114-5801

RE: Exception location -- Utah 01-209, Section 1, T15S, R8E, SLB&M
Carbon County, Utah

Dear Mr. Baza:

Please accept this letter as River Gas Corporation's (RGC's) request that this proposed well be approved as an exception location in accordance with Utah Administrative Code § R649-3-3 for geological reasons. This proposed well site does not conform with the cause No. 243-1 160 acre spacing order that affects the subject SE/4.

RGC's Land Department will send your office an affidavit describing the owners within a 460 foot radius of the well. Thank you for your timely consideration of this request, please feel free to contact me if you have any questions or need additional information.

Sincerely yours,

Don S. Hamilton

Don S. Hamilton
Permitting Specialist

cc: Tammie Butts, RGC
Joey Stephenson, RGC
RGC well file

RECEIVED
MAR 5 1999
DIV OF OIL, GAS & MINING

RECEIVED
MAR 11 1999
DIV OF OIL, GAS & MINING

STATE OF ALABAMA )
:ss.
COUNTY OF TUSCALOOSA )

AFFIDAVIT REGARDING EXCEPTION LOCATION REQUEST

JOSEPH L. STEPHENSON, being first duly sworn upon his oath, deposes and states:

1. I am Vice President - Land of River Gas Corporation ("RGC"), an Alabama corporation duly authorized to transact business in the State of Utah, and am authorized to execute this Affidavit on behalf of said corporation.

2. As Vice President - Land, I am responsible for supervision of lease records, reviewing title records and legal opinions affecting lands where RGC proposes to conduct operations, and maintain records of ownership in the vicinity of proposed operations.

3. RGC proposes to drill a well named the Utah 1-209 on land owned by the State of Utah in the SE1/4 of Section 1, T15S, R8E, SLM, Carbon County, Utah. The well, and a 460' radius around said well, is on State lease ML-48187 (formerly UTU-61155). RGC is the operator for this proposed well and is authorized to seek a request from the Division of Oil, Gas and Mining to approve an exception location in accordance with Utah Administrative Code § R649-3-3.

4. The matters stated herein are true of my own knowledge, except to any matters stated herein upon information and belief, and, as to those matters, I believe them to be true.

DATED this 8th day of March, 1999.

JOSEPH L. STEPHENSON

Subscribed, sworn and acknowledged to and by Joseph L. Stephenson before me this 8th day of March, 1999.

NOTARY PUBLIC
Dana Campbell
Residing at:
6231 Hibiscus Lane
Northport, AL 35473

My Commission Expires:
March 9, 2002

RGC

RIVER GAS CORPORATION
UTAH OPERATIONS
1305 South 100 East
Price, Utah 84501
Bus. (435) 637-8876
FAX (435) 637-8924

COPY

CONFIDENTIAL

February 25, 1999

Mr. John Baza
Associate Director
Division of Oil, Gas and Mining
1594 West North Temple, Suite 1210
Salt Lake City, Utah 84114-5801

RE: Exception location -- Utah 01-209, Section 1, T15S, R8E, SLB&M
Carbon County, Utah

Dear Mr. Baza:

Please accept this letter as River Gas Corporation's (RGC's) request that this proposed well be approved as an exception location in accordance with Utah Administrative Code § R649-3-3 for geological reasons. This proposed well site does not conform with the cause No. 243-1 160 acre spacing order that affects the subject SE/4.

RGC's Land Department will send your office an affidavit describing the owners within a 460 foot radius of the well. Thank you for your timely consideration of this request, please feel free to contact me if you have any questions or need additional information.

Sincerely yours,

Don S. Hamilton

Don S. Hamilton
Permitting Specialist

cc: Tammie Butts, RGC
Joey Stephenson, RGC
RGC well file

# Range 8 East

Township 15 South

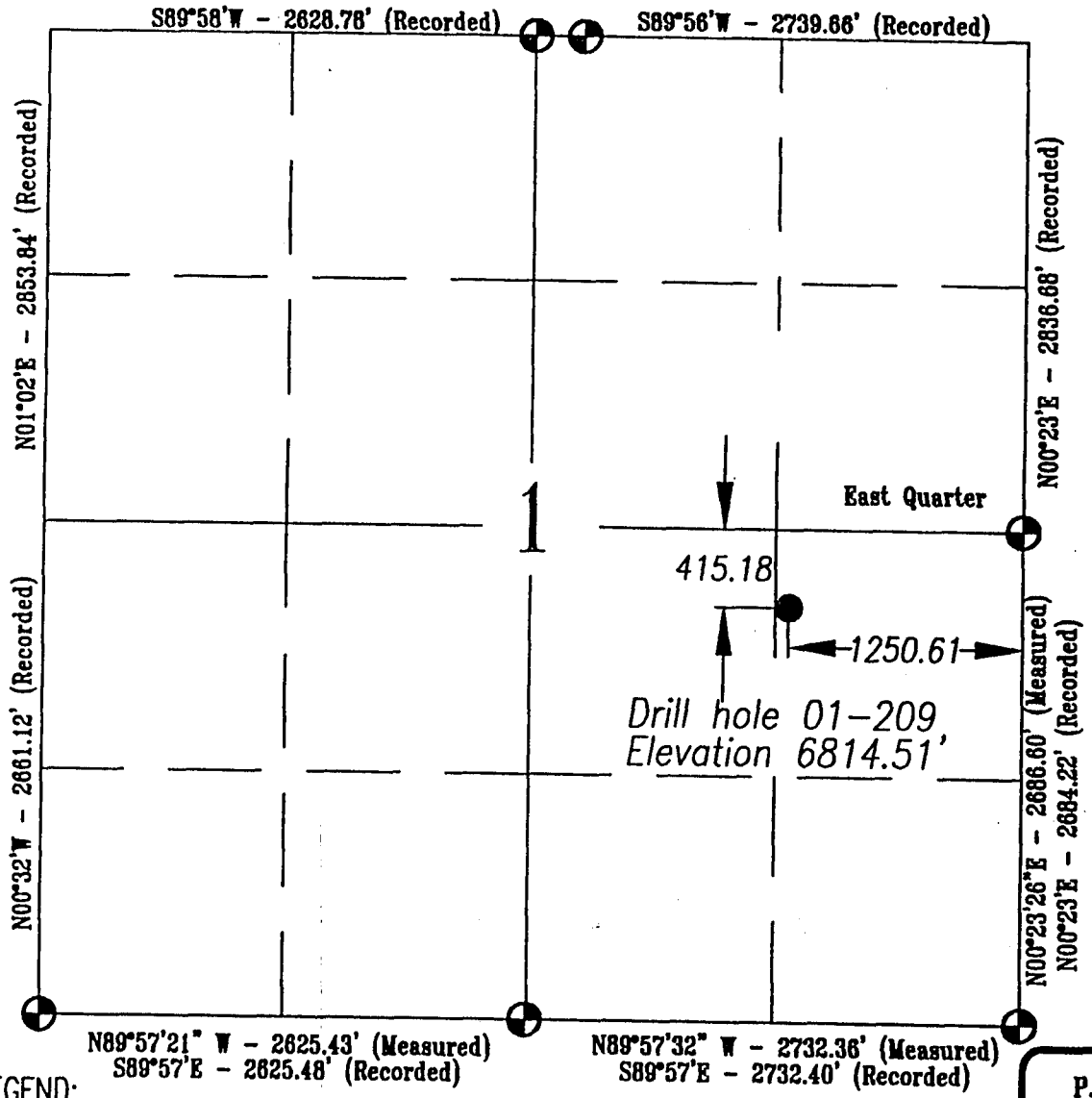


## Basis of Bearing:

*Basis of Bearing N02°13'W Recorded between the NW Corner and the West quarter corner of Section 11, Township 15 South, Range 8 East, Salt Lake Base & Meridian.*

## Basis Of Elevation:

*Basis of Elevation of 7160' as indicated in the NW Corner of Section 11, Township 15 South, Range 8 East, Salt Lake Base and Meridian, as shown on the Wattis Quadrangle 7.5 Minute Series Map.*

## Description of Location:

*Proposed Drill Hole located in the NE 1/4 SE 1/4 of Section 1; 415.18' South and 1250.61' West from the East quarter corner of Section 1, T15S, R8E, Salt Lake Base & Meridian.*

## Surveyor's Certificate:

**I, Daniel W. Peatross, a Registered Licensed Land Surveyor, holding Certificate #259966, State of Utah, do hereby certify that the information on this drawing is true and accurate to the best of my knowledge and belief, and was conducted by myself, as shown hereon.**

Registered Land Surveyor
No. 259966
Daniel W. Peatross
State of Utah

Daniel W. Peatross
7-22-98

LEGEND:

- ● *Drill Hole Location*
- ⊕ *Found Section Corner Monumented w/ Brass Cap unless indicated otherwise.*
- ○ *Section Corner searched for but not found*

SCALE:

250' 0' 500' 1000'

| | |
|---|---|
| DRAWN BY: P. BOYLEN | Castle Valley Surveying<br>3266 South 125 West<br>Price, Utah 84501<br>(801) 637-8300<br>FAX (801) 637-2833 |
| CHECKED BY: L.W.J. | |
| DATE: 7/20/98 | |
| SCALE: 1"=1000' | |
| JOB NO. 409 | River Gas Corporation<br>Well# 1-209<br>Section 1, T15S, R8E, S.L.B.&M.<br>Carbon County, Utah |
| DRAWING NO. A-1 | |
| SHEET 1 OF 4 | |

RGC

RIVER GAS CORPORATION
UTAH OPERATIONS
1305 South 100 East
Price, Utah 84501
Bus. (435) 637-8876
FAX (435) 637-8924

RECEIVED
MAR 11 1999
DIV OF OIL GAS & MINING

March 10, 1999

Mr. John Baza
State of Utah
Division of Oil, Gas and Mining
1594 West North Temple, Suite 1210
P.O. Box 145801
SLC, Utah 84114-5801

RE: Affidavits Regarding Exception Location Request

Dear Mr. Baza:

Enclosed is the original of the *Affidavit Regarding Exception Location Request* for numerous proposed wellsites in which APD's have previously been filed. Included with each request is a duplicate copy of a previously submitted letter request for exception location and a survey plat for each proposed wellsite.

Thank you very much for your timely consideration of these requests. Please feel free to contact me if you have any questions or require additional information.

Sincerely,

Don S. Hamilton

Don S. Hamilton
Permit Specialist

cc: Mr. Joey Stephenson, River Gas Corporation
Mrs. Tammie Butts, River Gas Corporation
RGC Well Files

GeoScout Land & Title Company
P.O. Box 11126 • Salt Lake City, Utah 84147 • (801) 364-7773

April 2, 1999

RECEIVED
APR 2 1999
DIV. OF OIL, GAS & MINING

**HAND DELIVERED**

Mr. John Baza, Associate Director, Oil & Gas
Utah Division of Oil, Gas and Mining
1594 West North Temple, Suite 1210
Salt Lake City, Utah 84180

Re: *River Gas Corporation*
*Utah 1-209 Well Exception Location*
*Section 1, Township 15 South, Range 8 East, SLM*
*Carbon County, Utah*
*API No. 43-015-30467*

Dear Mr. Baza:

Reference is made to the pending application for permit to drill ("APD") for the captioned well filed by our client, River Gas Corporation ("RGC"). As you may recall, the well was originally to be drilled on Federal Lease UTU-61155. The APD was filed by RGC in August, 1998. In the interim, the lands were transferred to the State of Utah as part of the Land Exchange Act of 1998. SITLA has redesignated the lease as ML-48187.

The lands on which this well is proposed to be located are currently subject to the Board's Order entered in Cause No. 243-1. Under that Order, drilling units of 160 acres (or substantial equivalents thereto) were created and no well may be drilled closer than 660 feet from a unit boundary without an exception location. The captioned well is to be drilled at a location 2,271' FSL and 1,251' FEL in Lot 13 (NE¼SE¼) of Section 1. The distance from the well to the northern boundary of the unit comprised of Lots 13 and 14 and the W½SE¼ [SE¼] (as created under the Order in Cause No. 243-1) is less than 660 feet. The well cannot be located further south due to geological reasons. As a consequence, an exception location under Utah Admin. Code Rule R649-3-3-1.3 is required.

Because the proposed location is north of the 660 foot boundary allowed under the Order, the only "offsetting" drilling unit affected by the required exception location is the one comprised of Lots 1, 2 and 7-10 [NE¼] of Section 1. As shown by the enclosed Affidavit, the "owners" within that offsetting unit are RGC and Texaco Exploration and Production Inc. ("TEXEP"). RGC, by virtue of its application for the well, and TEXEP, by virtue of the enclosed Consent, have approved the exception location. With the information provided with this letter and contained in your file for the pending APD, all requirements for approval of an exception location have been satisfied. Your prompt approval is therefore requested.

If you have any further questions or concerns regarding this application, please do not hesitate to contact either me or Fred MacDonald at Pruitt, Gushee & Bachtell (801)531-8446. On behalf of RGC, I thank you for your immediate attention to this matter.

Yours very truly,

Sally M. Sullivan

Sally M. Sullivan

SMS:se
1526.167
Enclosures
cc: Joseph L. Stephenson

# AFFIDAVIT

STATE OF UTAH )
:ss
COUNTY OF SALT LAKE )

Sally M. Sullivan, being duly sworn upon her oath, deposes and states:

1. I am the Vice President of GeoScout Land & Title Company ("GeoScout").

2. GeoScout is a company that specializes in mineral abstracts and mineral title searches, including searches of the oil and gas records at the School & Institutional Trust Lands Administration, State of Utah ("SITLA"), and at the United States Department of the Interior, Bureau of Land Management ("BLM"). I have performed such searches on behalf of GeoScout's clients for over nine years.

3. Based solely upon the following title data:

a. Drilling Title Opinion dated July 8, 1997 (effective March 1, 1997) covering Federal Lease UTU-61155 and Lots 1, 2 and 7-10 of Section 1, Township 15 South, Range 8 East, SLM, among other lands, prepared by Pruitt, Gushee & Bachtell and provided to me by River Gas Corporation,

as supplemented by my search of the BLM and SITLA record on March 31, 1999, pertaining to said lands and lease (re-designated by SITLA as ML-48187 as a result of the Utah State Land Exchange Act of 1998), I have determined the following parties to be the "owners" (as that term utilized in the Utah Admin. Code Rule R649-3-3) within Lots 1, 2 and 7-10 of said Section 1, being the offsetting drilling unit (created under the Board of Oil, Gas & Mining's Order entered in Cause No. 243-1) to the proposed Utah 1-209 well located in the NE¼SE¼ (Lot 13) of Section 1, Township 15 South, Range 8 East, SLM:

TEXACO EXPLORATION AND PRODUCTION INC.

RIVER GAS CORPORATION

4. The matters stated herein are true of my own knowledge.

Dated this 2nd day of April, 1999.

Sally M. Sullivan
SALLY M. SULLIVAN

Subscribed, sworn and acknowledged to and by Sally M. Sullivan before me this 2nd day of April, 1999.

Notary Public
CHARLENE B. SEEGMILLER
256 South 1525 West
Farmington, Utah 84025
My Commission Expires
May 6, 2001
State of Utah

Charlene B. Seegmiller
NOTARY PUBLIC

## CONSENT TO EXCEPTION LOCATION

**TEXACO EXPLORATION AND PRODUCTION INC.,** P.O. Box 2100, Denver, CO 80201, an "owner" (as that term is utilized in Utah Admin. Code Rule R649-3-3) within Lots 1, 2 and 7-10 of Section 1, Township 15 South, Range 8 East, SLM, the offsetting drilling unit under the Order entered in Cause No. 243-1 to the Utah 01-209 well proposed by River Gas Corporation, hereby consents to the requested exception location of that well as shown on the attached application for permit to drill.

DATED this 31 day of MARCH, 1999.

**TEXACO EXPLORATION AND PRODUCTION INC.**

By: Chuck Snure

Chuck Snure, Land Representative

(December 1990)

(Other instructions on reverse side)

Form approved.
Budget Bureau No. 1004-0136
Expires: December 31, 1991

UNITED STATES
DEPARTMENT OF THE INTERIOR
BUREAU OF LAND MANAGEMENT

# APPLICATION FOR PERMIT TO DRILL OR DEEPEN

5. LEASE DESIGNATION AND SERIAL NO.: ~~UTU-61155~~ ML-48187

6. IF INDIAN, ALLOTTEE OR TRIBE NAME: N/A

7. UNIT AGREEMENT NAME: N/A

8. FARM OR LEASE NAME, WELL NO.: ~~USA~~ 1-209 Utah

9. API WELL NO.:

10. FIELD AND POOL, OR WILDCAT: Undesignated

11. SEC., T., R., M., OR BLK. AND SURVEY OR AREA: NE/4,SE/4, Sec.1, T15S, R8E, SLB&M

12. COUNTY OR PARISH: CARBON

13. STATE: UTAH

1a. TYPE OF WORK: DRILL [X] DEEPEN [ ]

b. TYPE OF WELL: OIL WELL [ ] GAS WELL [X] OTHER SINGLE ZONE [X] MULTIPLE ZONE [ ]

2. NAME OF OPERATOR: River Gas Corp.

3. ADDRESS AND TELEPHONE NO.: 1305 So. 100 E. Price, Utah 84501 (801) 637-8876

4. LOCATION OF WELL (Report location clearly and in accordance with any State requirements.*)
At surface: 2271' FSL, 1251' FEL
At proposed prod. zone: 692 [illegible]

CONFIDENTIAL

14. DISTANCE IN MILES AND DIRECTION FROM NEAREST TOWN OR POST OFFICE*: 9.4 miles southwest of Price

15. DISTANCE FROM PROPOSED* LOCATION TO NEAREST PROPERTY OR LEASE LINE, FT. (Also to nearest drlg. unit line, if any): 1251'

16. NO. OF ACRES IN LEASE: 2372.22 acres

17. NO. OF ACRES ASSIGNED TO THIS WELL: 160 acres

18. DISTANCE FROM PROPOSED LOCATION TO NEAREST WELL, DRILLING, COMPLETED, OR APPLIED FOR, ON THIS LEASE, FT.: 1900'

19. PROPOSED DEPTH: 4220'

20. ROTARY OR CABLE TOOLS: Rotary

21. ELEVATIONS (Show whether DF, RT, GR, etc.): GR 6815'

22. APPROX. DATE WORK WILL START*: September 1998

23. PROPOSED CASING AND CEMENTING PROGRAM

| SIZE OF HOLE | GRADE, SIZE OF CASING | WEIGHT PER FOOT | SETTING DEPTH | QUANTITY OF CEMENT |
|---|---|---|---|---|
| 14" | 12-3/4" | Conductor | 25' | |
| 11" | 8-5/8" | 24 #/ft | 422' | 149 sks. Class G+2%CaCl +1/4# per sack flocel |
| 7- 7/8" | 5-1/2" | 17 #/ft | 4220' | 343sks 50/50 poz + 8% gel + 2% CaCl + 10% extender .75 sks "G" thixotropic |

502562.9
4 37 443.5

RECEIVED
APR 2 1999
DIV. OF OIL, GAS & MINING

RECEIVED
AUG 12 1998
DIV. OF OIL, GAS & MINING

IN ABOVE SPACE DESCRIBE PROPOSED PROGRAM: If proposal is to deepen, give data present productive zone and proposed new productive zone. If proposal is to drill or deepen directionally, give pertinent data on subsurface locations and measured and true vertical depths. Give blowout preventer program, if any.

24.

SIGNED Don S. Hamilton TITLE Permit Specialist DATE August 5, 1998

(This space for Federal or State office use)

PERMIT NO. 43-007-30467 APPROVAL DATE

Application approval does not warrant or certify that the applicant holds legal or equitable title to those rights in the subject lease which would entitle the applicant to conduct operations thereon.
CONDITIONS OF APPROVAL, IF ANY:

APPROVED BY TITLE DATE

***See Instructions On Reverse Side**

Title 18 U.S.C. Section 1001, makes it a crime for any person knowingly and willfully to make to any department or agency or the United States any false, fictitious or fraudulent statements or representations as to any matter within its jurisdiction.

# Range 8 East

Township 15 South

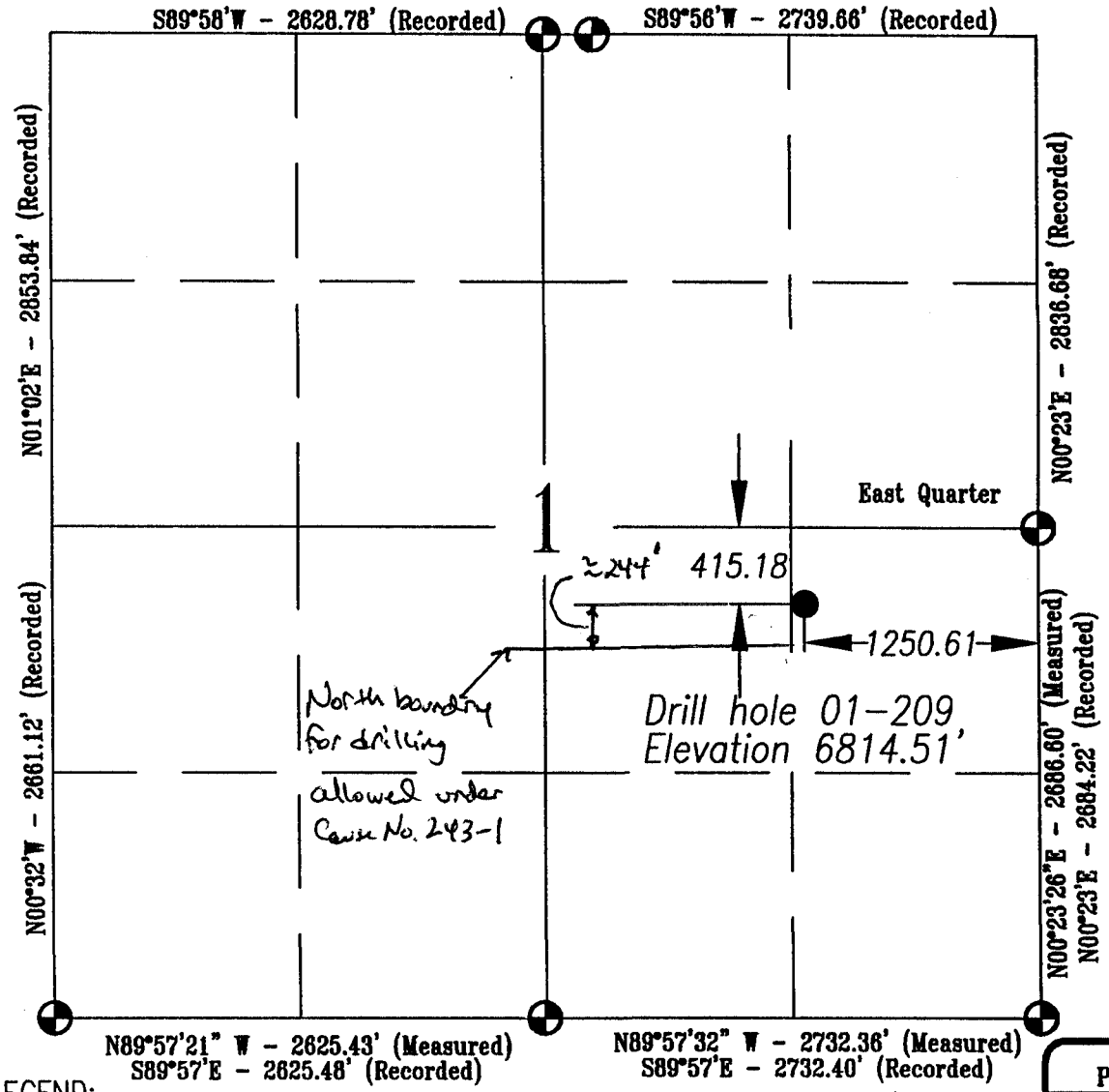


## Basis of Bearing:

*Basis of Bearing N02°13'W Recorded between the NW Corner and the West quarter corner of Section 11, Township 15 South, Range 8 East, Salt Lake Base & Meridian.*

## Basis Of Elevation:

*Basis of Elevation of 7160' as indicated in the NW Corner of Section 11, Township 15 South, Range 8 East, Salt Lake Base and Meridian, as shown on the Wattis Quadrangle 7.5 Minute Series Map.*

## Description of Location:

*Proposed Drill Hole located in the NE 1/4 SE 1/4 of Section 1; 415.18' South and 1250.61' West from the East quarter corner of Section 1, T15S, R8E, Salt Lake Base & Meridian.*

## Surveyor's Certificate:

**I, Daniel W. Peatross, a Registered Licensed Land Surveyor, holding Certificate #259966, State of Utah, do hereby certify that the information on this drawing is true and accurate to the best of my knowledge and belief, and was conducted by myself, as shown hereon.**

Registered Land Surveyor
No. 259966
Daniel W. Peatross
State of Utah

Daniel W. Peatross
7-22-98

LEGEND:

- ● *Drill Hole Location*
- ⊕ *Found Section Corner Monumented w/ Brass Cap unless indicated otherwise.*
- ○ *Section Corner searched for but not found*

SCALE:

250' 0' 500' 1000'

| | |
|---|---|
| DRAWN BY: P. BOYLEN | Castle Valley Surveys, 3266 South 125 West, Price, Utah 84501, (801) 637-8300, FAX (801) 637-2833 |
| CHECKED BY: L.W.J. | |
| DATE: 7/20/98 | |
| SCALE: 1"=1000' | |
| JOB NO. 409 | River Gas Corporation |
| DRAWING NO. A-1 | Well# 1-209 |
| SHEET 1 OF 4 | Section 1, T15S, R8E, S.L.B.&M. |
| | Carbon County, Utah |

WORKSHEET
APPLICATION FOR PERMIT TO DRILL

APD RECEIVED: 08/12/1998 **AMENDED** | API NO. ASSIGNED: 43-007-30467

WELL NAME: ~~USA~~ Utah 1-209
OPERATOR: RIVER GAS CORPORATION ~~(N5050)~~ N1605
CONTACT: Don Hamilton (435) 637-8876

PROPOSED LOCATION:
NESE 01 - T15S - R08E
SURFACE: 2271-FSL-1251-FEL
BOTTOM: 2271-FSL-1251-FEL
CARBON COUNTY
UNDESIGNATED FIELD (002)

LEASE TYPE: ~~FED~~ Sta
LEASE NUMBER: ~~UTU-61155~~ ML-48187
SURFACE OWNER: ~~Federal~~ State (per Oper. 2/99)

PROPOSED FORMATION: FRSD

| INSPECT LOCATN BY: / / | | |
|---|---|---|
| TECH REVIEW | Initials | Date |
| Engineering | RJK | 4-13-99 |
| Geology | | |
| Surface | | |

RECEIVED AND/OR REVIEWED:

✓ Plat
✓ Bond: Federal [ ] State [✓] Fee [ ]
(No. ~~5304604~~ 579333)
N Potash (Y/N)
N Oil Shale (Y/N) *190-5(B)
✓ Water Permit
(No. PW10 / City of Price)
N RDCC Review (Y/N)
(Date: )

N/A Fee Surf Agreement (Y/N)

LOCATION AND SITING:

___ R649-2-3. Unit Drunkards Wash
___ R649-3-2. General
___ R649-3-3. Exception
✓ Drilling Unit
Board Cause No: 243-1 (160')
Date: 10-13-98

COMMENTS: * Need add'l info. "Except. Loc." (Rec'd 3-11-99) (4-2-99 Corrected Reg.)
* Need Presite. (Conducted 4-1-99)
* See also 1999 Dev. Program / Land Ex., sep. file.

STIPULATIONS: (1) Engr. - See attached worksheet.
(2) STATEMENT OF BASIS
(3) SITLA STIPULATIONS

DIVISION OF OIL, GAS & MINING

OPERATOR: RIVER GAS CORPORATION (N1605)

FIELD: UNDESIGNATED (002)

SEC. 1, TWP 15S, RNG 8E

COUNTY: CARBON UAC: R649-3-2.2 LIKE DRUNKARDS WASH UNIT

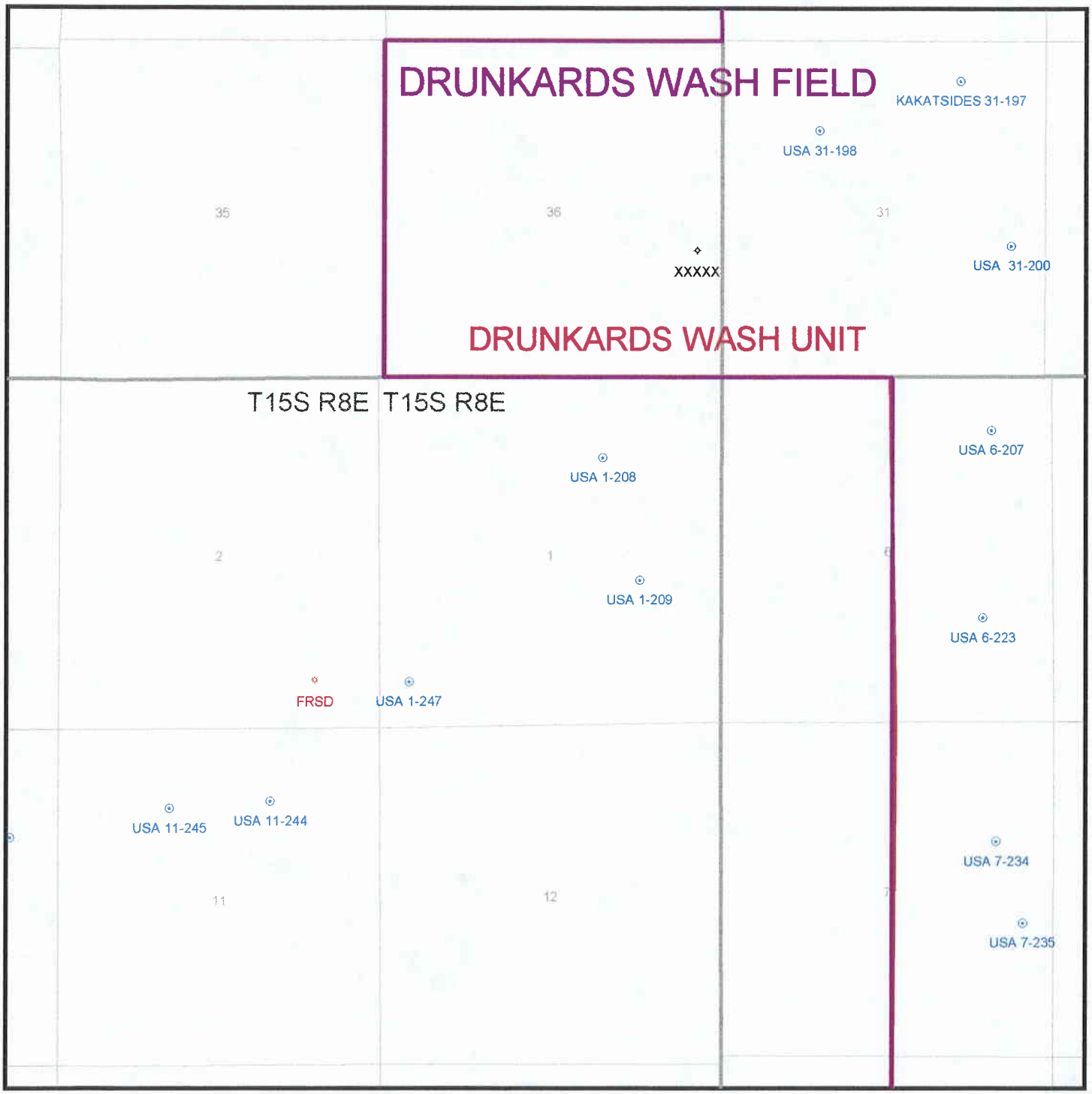


DATE PREPARED:
~~18-AUG-1998~~
2-16-99

# DIVISION OF OIL, GAS AND MINING

**APPLICATION FOR PERMIT TO DRILL**
**STATEMENT OF BASIS**

**Operator Name:** River Gas Corporation

**Name & Number:** Utah 1-209

**API Number:** 43-007-30467

**Location:** 1/4,1/4 NESE Sec. 1 T. 15S R. 8E

**Geology/Ground Water:**
The sandy, silty, moderately-permeable soil is developed on the Upper Part of the Blue Gate Member of the Mancos Shale. The Emery Sandstone Member and the Garley Canyon Sandstone Beds of the Blue Gate Member of the Mancos Shale are likely to be present at this location. If the Garley Canyon Beds are present (probable) and wet (possible - standing water was found in upper Garley Canyon Beds in Pinnacle Canyon ~2 miles northeast), both beds and the suprajacent Emery Sandstone Member should be included within the surface casing string. The operator is informed of the potential for wet Garley Canyon Beds and will respond to protect the zones by extending the surface casing string as needed. Extending the proposed casing and cement will adequately isolate any shallow zones containing water. An igneous intrusive dike trending east - west exists ~100' north of the pad.

**Reviewer:** Christopher J. Kierst **Date:** 4/8/99

**Surface:**
The nearest moving surface waters are at North Spring (1 3/4 miles southeast). Precipitation will be deflected around the location with berms and culverts. There are no nearby culinary or irrigation water supply wells. The site was photographed and characterized on 4/1/99. Provision was made to ensure site rehabilitation, litter and waste control, preservation of drainage patterns and the integrity of local infrastructure, groundwater and other resources. The well utilities and gas gathering system will follow the approach roadway.

**Reviewer:** Christopher J. Kierst **Date:** 4/1/99

**Conditions of Approval/Application for Permit to Drill:**
1) Culverts sufficient to manage expected runoff, standing and surface water in crossed drainages.
2) Berm location and pit.
3) Site infrastructure as per drilling location plat.
4) Minimum 12 mil synthetic liner required.
5) Soil storage as per drilling location plat.
6) Extend surface casing as needed to contain any water in the Garley Canyon Beds of Blue Gate Member of the Mancos Shale.

# ON-SITE PREDRILL EVALUATION

## Division of Oil, Gas and Mining

OPERATOR: River Gas Corporation

WELL NAME & NUMBER: Utah 1-209

API NUMBER: 43-007-30467

LEASE: State FIELD/UNIT: Undesignated

LOCATION: 1/4,1/4 NESE Sec: 1 TWP: 15S RNG: 8E 2271 FSL 1251 FEL

LEGAL WELL SITING: 660'F SEC. LINE; 660'F 1/4,1/4 LINE; 1320'F ANOTHER WELL.

GPS COORD (UTM): X = 502,511 Y =4,377,639

SURFACE OWNER: SITLA

PARTICIPANTS

C. Kierst(DOGM), D. Hamilton(RGC), G. Vasquez(RGC), L. Jensen (Nelco), C. Colt (DWR).

REGIONAL/LOCAL SETTING & TOPOGRAPHY

Western margin of Colorado Plateau/~2 miles east of Wasatch Plateau highlands, surrounded by 1-200' high upper bench erosional remnants and there are canyons to the north and south. Location is about 9 miles southwest of Price, Utah, 3 miles northeast of Wattis on a moderately eroded landscape and ~1000' east of a bend in the railroad grade. Pad is ~100' south of an east-west trending igneous dike.

SURFACE USE PLAN

CURRENT SURFACE USE: Grazing, wildlife habitat

PROPOSED SURFACE DISTURBANCE: 215' X 175' pad with 50' X 50' X 10' attached pit. No new approach road is needed.

LOCATION OF EXISTING WELLS WITHIN A 1 MILE RADIUS: 3 RGC CBM locations in DRL status, 1 RGC CBM production location (2-169) and 1 P&A (Haley's Siding 36-4)

LOCATION OF PRODUCTION FACILITIES AND PIPELINES: none nearby.

SOURCE OF CONSTRUCTION MATERIAL: Gravel location and approach road; soil stored in berm.

ANCILLARY FACILITIES: none

WASTE MANAGEMENT PLAN:

Portable toilets; garbage cans on location will be emptied into centralized dumpsters which will be emptied into an approved landfill.

ENVIRONMENTAL PARAMETERS

AFFECTED FLOODPLAINS AND/OR WETLANDS: Location is ~2500' northeast of the wash in North Spring Canyon, 1 3/4 miles northwest of North Spring and ~1.5 miles northeast of Serviceberry Creek. The Price River is ~8 miles northeast.

FLORA/FAUNA: Sparse pinyon and juniper, sagebrush, grass,/ birds, lizards, coyotes, rodents, raptors, priority elk and critical deer winter range, reptiles

SOIL TYPE AND CHARACTERISTICS: Sandy, silty soil developed on the Upper Part of the Blue Gate Member of the Mancos Shale (SM).

SURFACE FORMATION & CHARACTERISTICS: Upper Part of Blue Gate Member (above Emery Sandstone Member and Garley Canyon Beds of the Blue Gate Member) of Mancos Shale, light gray, bentonitic shale and sandstone ledges.

EROSION/SEDIMENTATION/STABILITY: stable

PALEONTOLOGICAL POTENTIAL: None observed

RESERVE PIT

CHARACTERISTICS: Dugout, earthen pit, as above.

LINER REQUIREMENTS (Site Ranking Form attached): Minimum 12 mil synthetic liner

SURFACE RESTORATION/RECLAMATION PLAN

See SITLA agreement.

SURFACE AGREEMENT: On file with state.

CULTURAL RESOURCES/ARCHAEOLOGY: On file with state.

OTHER OBSERVATIONS/COMMENTS

High tension lines ~800' east of pad. Igneous intrusive dike trending east - west exists ~100' north of pad.

ATTACHMENTS:

4 photographs taken.

| | |
|---|---|
| Chris Kierst | 4/1/99/ 12:25 PM |
| DOGM REPRESENTATIVE | DATE/TIME |

**Evaluation Ranking Criteria and Ranking Score**
**For Reserve and Onsite Pit Liner Requirements**

| Site-Specific Factors | Ranking | Site Ranking |
|---|---|---|
| Distance to Groundwater (feet) | | |
| >200 | 0 | |
| 100 to 200 | 5 | |
| 75 to 100 | 10 | |
| 25 to 75 | 15 | |
| <25 or recharge area | 20 | 0 |
| Distance to Surf. Water (feet) | | |
| >1000 | 0 | |
| 300 to 1000 | 2 | |
| 200 to 300 | 10 | |
| 100 to 200 | 15 | |
| < 100 | 20 | 0 |
| Distance to Nearest Municipal Well (feet) | | |
| >5280 | 0 | |
| 1320 to 5280 | 5 | |
| 500 to 1320 | 10 | |
| <500 | 20 | 0 |
| Distance to Other Wells (feet) | | |
| >1320 | 0 | |
| 300 to 1320 | 10 | |
| <300 | 20 | 0 |
| Native Soil Type | | |
| Low permeability | 0 | |
| Mod. permeability | 10 | |
| High permeability | 20 | 10 |
| Fluid Type | | |
| Air/mist | 0 | |
| Fresh Water | 5 | |
| TDS >5000 and <10000 | 10 | |
| TDS >10000 or Oil Base Mud Fluid containing significant levels of hazardous constituents | 15 | |
| | 20 | 0 |
| Drill Cuttings | | |
| Normal Rock | 0 | |
| Salt or detrimental | 10 | 0 |
| Annual Precipitation (inches) | | |
| <10 | 0 | |
| 10 to 20 | 5 | |
| >20 | 10 | 5 |
| Affected Populations | | |
| <10 | 0 | |
| 10 to 30 | 6 | |
| 30 to 50 | 8 | |
| >50 | 10 | 0 |
| Presence of Nearby Utility Conduits | | |
| Not Present | 0 | |
| Unknown | 10 | |
| Present | 15 | 0 |

**Final Score** 15 (Level II Sensitivity)

| | |
|---|---|
| Well name: | **RGC 499 Utah 1-209** |
| Operator: | **River Gas Corp.** |
| String type: | Surface |
| Location: | Carbon County |
| Project ID: | 43-007-30467 |

**Design parameters:**

**Collapse**

Mud weight: 8.330 ppg

Design is based on evacuated pipe.

**Burst**

Max anticipated surface pressure: -4,553 psi

Internal gradient: 11.221 psi/ft

Calculated BHP 183 psi

No backup mud specified.

**Minimum design factors:**

**Collapse:**

Design factor 1.125

**Burst:**

Design factor 1.00

**Tension:**

| | |
|---|---|
| 8 Round STC: | 1.80 (J) |
| 8 Round LTC: | 1.80 (J) |
| Buttress: | 1.60 (J) |
| Premium: | 1.50 (J) |
| Body yield: | 1.50 (B) |

Tension is based on buoyed weight.

Neutral point: 369 ft

**Environment:**

| | |
|---|---|
| H2S considered? | No |
| Surface temperature: | 75 °F |
| Bottom hole temperature: | 81 °F |
| Temperature gradient: | 1.40 °F/100ft |
| Minimum section length: | 290 ft |
| Cement top: | 55 ft |

Non-directional string.

**Re subsequent strings:**

| | |
|---|---|
| Next setting depth: | 7,500 ft |
| Next mud weight: | 9.000 ppg |
| Next setting BHP: | 3,506 psi |
| Fracture mud wt: | 19.250 ppg |
| Fracture depth: | 7,500 ft |
| Injection pressure | 7,500 psi |

| Run Seq | Segment Length (ft) | Size (in) | Nominal Weight (lbs/ft) | Grade | End Finish | True Vert Depth (ft) | Measured Depth (ft) | Drift Diameter (in) | Internal Capacity ($ft^3$) |
|---|---|---|---|---|---|---|---|---|---|
| 1 | 422 | 8.625 | 24.00 | J-55 | ST&C | 422 | 422 | 7.972 | 20.3 |

| Run Seq | Collapse Load (psi) | Collapse Strength (psi) | Collapse Design Factor | Burst Load (psi) | Burst Strength (psi) | Burst Design Factor | Tension Load (Kips) | Tension Strength (Kips) | Tension Design Factor |
|---|---|---|---|---|---|---|---|---|---|
| 1 | 183 | 1370 | 7.50 | 183 | 2950 | 16.15 | 9 | 244 | 27.53 J |

Prepared by: RJK
Utah Dept. of Natural Resources

Date: April 13,1999
Salt Lake City, Utah

ENGINEERING STIPULATIONS: Conductor and surface casing shall be cemented to surface.
Collapse strength is based on the Westcott, Dunlop & Kemler method of biaxial correction for tension.
Collapse is based on a vertical depth of 422 ft, a mud weight of 8.33 ppg The casing is considered to be evacuated for collapse purposes.
Burst strength is not adjusted for tension.

*Engineering responsibility for use of this design will be that of the purchaser.*

| | |
|---|---|
| Well name: | **RGC 499 Utah 1-209** |
| Operator: | **River Gas Corp.** |
| String type: | Production |
| Location: | Carbon County |
| Project ID: | 43-007-30467 |

## Design parameters:

**Collapse**

Mud weight: 8.330 ppg

Design is based on evacuated pipe.

**Burst**

Max anticipated surface pressure: 0 psi

Internal gradient: 0.433 psi/ft

Calculated BHP 1,826 psi

No backup mud specified.

## Minimum design factors:

**Collapse:**

Design factor 1.125

**Burst:**

Design factor 1.00

**Tension:**

| | |
|---|---|
| 8 Round STC: | 1.80 (J) |
| 8 Round LTC: | 1.80 (J) |
| Buttress: | 1.60 (J) |
| Premium: | 1.50 (J) |
| Body yield: | 1.50 (B) |

Tension is based on buoyed weight.

Neutral point: 3,687 ft

## Environment:

| | |
|---|---|
| H2S considered? | No |
| Surface temperature: | 75 °F |
| Bottom hole temperature: | 134 °F |
| Temperature gradient: | 1.40 °F/100ft |
| Minimum section length: | 368 ft |
| Cement top: | 1,460 ft |

Non-directional string.

| Run Seq | Segment Length (ft) | Size (in) | Nominal Weight (lbs/ft) | Grade | End Finish | True Vert Depth (ft) | Measured Depth (ft) | Drift Diameter (in) | Internal Capacity ($ft^3$) |
|---|---|---|---|---|---|---|---|---|---|
| 1 | 4220 | 5.5 | 17.00 | N-80 | LT&C | 4220 | 4220 | 4.767 | 145.4 |

| Run Seq | Collapse Load (psi) | Collapse Strength (psi) | Collapse Design Factor | Burst Load (psi) | Burst Strength (psi) | Burst Design Factor | Tension Load (Kips) | Tension Strength (Kips) | Tension Design Factor |
|---|---|---|---|---|---|---|---|---|---|
| 1 | 1826 | 6290 | 3.44 | 1826 | 7740 | 4.24 | 63 | 348 | 5.55 J |

Prepared by: RJK
Utah Dept. of Natural Resources

Date: April 13,1999
Salt Lake City, Utah

ENGINEERING STIPULATIONS: Conductor and surface casing shall be cemented to surface.
Collapse strength is based on the Westcott, Dunlop & Kemler method of biaxial correction for tension.
Collapse is based on a vertical depth of 4220 ft, a mud weight of 8.33 ppg The casing is considered to be evacuated for collapse purposes.
Burst strength is not adjusted for tension.

*Engineering responsibility for use of this design will be that of the purchaser.*

# RGC 499 Utah 1-209

Casing Schematic

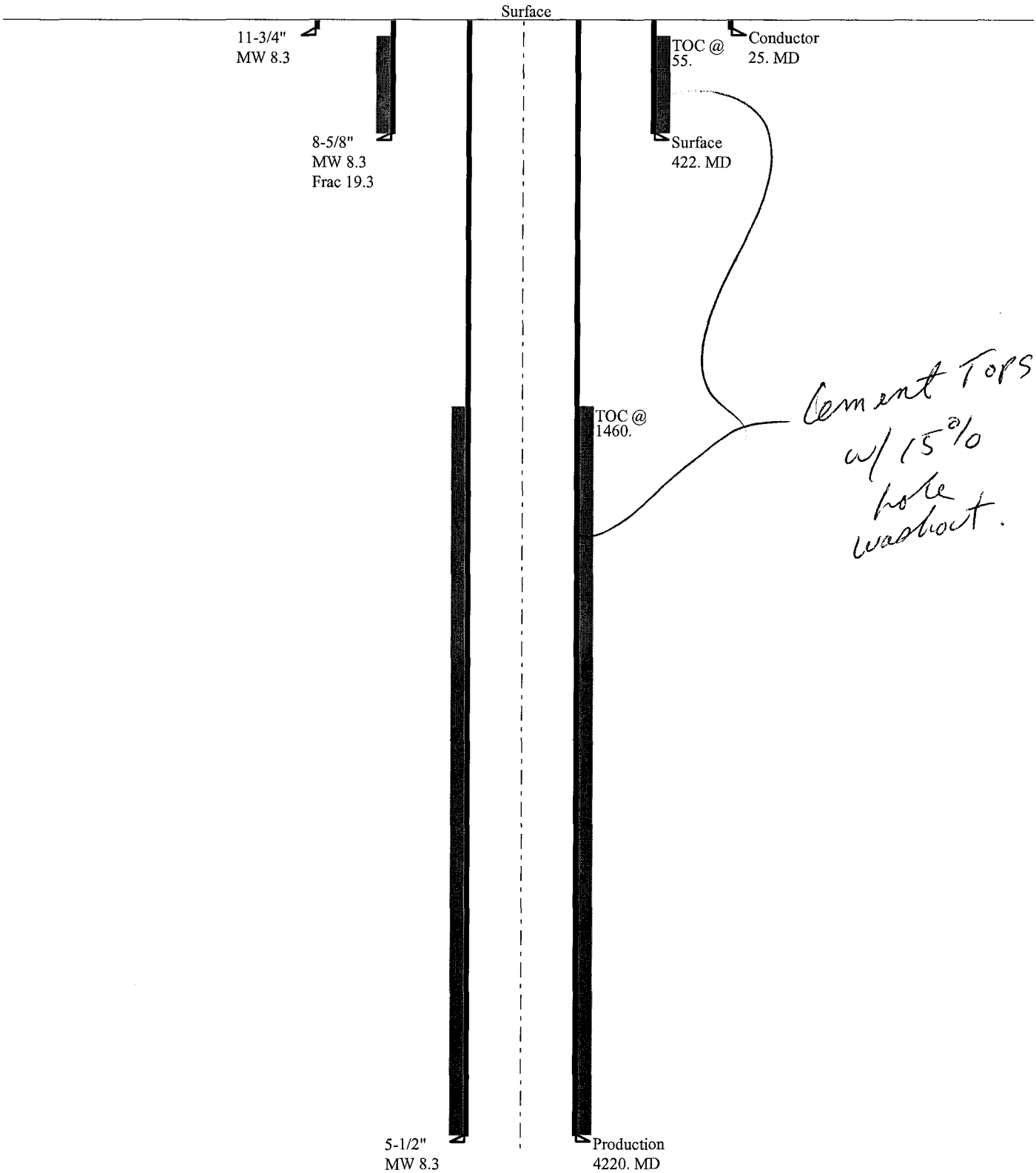

Michael O. Leavitt
Governor
Kathleen Clarke
Executive Director
Lowell P. Braxton
Division Director

# State of Utah

DEPARTMENT OF NATURAL RESOURCES
DIVISION OF OIL, GAS AND MINING

1594 West North Temple, Suite 1210
PO Box 145801
Salt Lake City, Utah 84114-5801
801-538-5340
801-359-3940 (Fax)
801-538-7223 (TDD)

April 20, 1999

River Gas Corporation
1305 South 100 East
Price, Utah 84501

Re: Utah 1-209 Well, 2271' FSL, 1251' FEL, NE SE, Sec. 1, T. 15 S., R. 8 E., Carbon County, Utah

Gentlemen:

Pursuant to the provisions and requirements of Utah Code Ann. 40-6-1 et seq., Utah Administrative Code R649-3-1 et seq., and the attached Conditions of Approval, approval to drill the referenced well is granted.

This approval shall expire one year from the above date unless substantial and continuous operation is underway, or a request for extension is made prior to the expiration date. The API identification number assigned to this well is 43-007-30467.

Sincerely,

John R. Baza
Associate Director

lwp
Enclosures
cc: Carbon County Assessor
Bureau of Land Management, Moab District Office
SITLA

**Operator:** River Gas Corporation

**Well Name & Number:** Utah 1-209

**API Number:** 43-007-30467

**Lease:** State **Surface Owner:** State

**Location:** NE SE **Sec.** 1 **T.** 15 S. **R.** 8 E.

## Conditions of Approval

1. General

   Compliance with the requirements of Utah Admin. R. 649-1 et seq., the Oil and Gas Conservation General Rules, and the applicable terms and provisions of the approved Application for Permit to Drill.

2. Notification Requirements

   Notify the Division of the following actions during drilling of this well:

   - 24 hours prior to cementing or testing casing
   - 24 hours prior to testing blowout prevention equipment
   - 24 hours prior to spudding the well
   - within 24 hours of any emergency changes made to the approved drilling program
   - prior to commencing operations to plug and abandon the well

   Division contacts (please leave a voice mail message if person is not available to take the call):

   - Dan Jarvis at (801) 538-5338
   - Robert Krueger at (801) 538-5274 (plugging)
   - Carol Daniels at (801) 538-5284 (spud)

3. Reporting Requirements

   All required reports, forms and submittals shall be promptly filed with the Division, including but not limited to the Entity Action Form (Form 6), Report of Water Encountered During Drilling (Form 7), Weekly Progress Reports for drilling and completion operations, and Sundry Notices and Reports on Wells requesting approval of change of plans or other operational actions.

4. Conductor and surface casing shall be cemented to surface.

5. Compliance with the Conditions of Approval/Application for Permit to Drill outlined in the Statement of Basis (copy attached).

6. School and Institutional Trust Lands Administration-Oil and Gas Conditions of Approval.

State of Utah
*School and Institutional*
TRUST LANDS ADMINISTRATION

675 East 500 South, Suite 500
Salt Lake City, Utah 84102-2818
801-538-5100
801-355-0922 (Fax)
http://www.trustlands.com

Michael O. Leavitt
Governor

David T. Terry
Director

July 8, 1999

Mr. Reed E. Harris
Field Supervisor
U.S. Fish and Wildlife Service
Utah Field Office
145 East 1300 South, Suite 404
Salt Lake City, UT 84102

Re: Proposal of River Gas Corporation
to Drill within 1/2 Mile of Raptor Nest
**Utah 1-209 Well**
Drunkards Wash Project, Carbon County, Utah

Dear Mr. Harris:

River Gas Corporation has proposed to drill a well in the SE/4 of Section 1, Township 15 South, Range 8 East, known as the Utah 1-209 well. The proposed location is within 1/2 mile of a golden eagle nest located in the SW/4 of Section 6, Township 15 South, Range 9 East (Nest 488) and within 1/2 mile of red tail hawk nests in the SE/4 of Section 6, Township 15 South, Range 8 East (Nests 486 and 487). Our review reveals the following.

None of these nests was observed to be active during the 1999 field survey conducted by the Utah Division of Wildlife Resources; however, the golden eagle nest was occupied in 1998 and one of the red tail hawk nests was tended.

The wellsite for the 1-209 is adjacent to a road currently being upgraded which will serve as the major access road from the top of the benches to River Gas's offices. During the onsite inspection for the road right-of-way, BLM and UDWR indicated that because the wellsite will be adjacent to the access road, it is not expected to cause any disturbance to golden eagles or raptors for purposes of their use of Nests 486, 487 and 488.

We propose approving the well to be drilled with the attached stipulations, including post-drilling monitoring to ensure continued stability of the raptor population. We believe this decision would conform with the Price Coalbed Methane Project EIS and ROD, and the USFWS Utah Field Office Guidelines for Raptor Protection from Human and Land Use Disturbances.

Should you believe we should consider other factors, please let us know by July 23, 1999; we intend to issue the permit promptly after that date. My direct number is 801/538-5150. Thank you for your assistance on this matter.

Sincerely,

James D. Cooper

cc. David T. Terry
Chris Colt, DWR
Brad Hill, DOGM
Randy Allen, RGC

# SCHOOL AND INSTITUTIONAL TRUST LANDS ADMINISTRATION

## OIL AND GAS CONDITIONS OF APPROVAL

## PRICE COALBED METHANE PROJECT

## FINAL ENVIRONMENTAL IMPACT STATEMENT

**Well:** **Utah 1-209**

**Mineral Lease No:** **ML 48187**

**API No.:**

**Location:** **SE¼ Section 1, Township 15 South, Range 8 East, SLBM**

**County:** **Carbon County, Utah**

The Bureau of Land Management has prepared an Environmental Impact Statement for a portion of the Price Coalbed Methane area and a Record of Decision has been issued with respect to certain actions considered in the Environmental Impact Statement.

Pursuant to the Utah Schools and Land Exchange Act of 1998, Pub. L. 105-335, 112 Stat. 3139, which ratified the May 8, 1998, "Agreement to Exchange Utah School Trust Lands Between the State of Utah and the United States of America" entered into between the State of Utah and the United States of America, the School and Institutional Trust Lands Administration ("SITLA") has agreed to adopt all conditions, mitigation measures and restrictions imposed on lessees by the Record of Decision in the administration of Federal Mineral Leases acquired in Townships 14, 15, 16 South and Ranger 8 and 9 East, SLBM.

Accordingly, SITLA's approval of the Application for Permit to Drill shall be conditioned upon the following:

Location of Facilities and Timing of Construction

Final well locations and transportation corridor alignments shall be selected and designed to avoid or minimize disturbances to sensitive areas, including areas of high wildlife value or critical habitat, grazing, and/or recreational value, including wetlands and riparian areas; and areas with high erosion potential, highly saline soils, rugged topography, and/or poor reclamation potential (i.e., steep slopes, eroded lands, floodplains, unstable soils), where possible.

New roads shall be constructed so as to avoid areas with high erosion potential. Where roads must be allowed, new roads shall be graded tp spread drainage instead of channeling runoff. No road on excess of 15 percent shall be allowed on slopes greater than 15 percent. No vehicle access shall be allowed across slopes on excess of 25 percent.

Construction shall not occur on frozen or saturated soils, or when watershed damage is likely, unless an adequate plan is submitted to SITLA that demonstrates potential impacts will be mitigated. SITLA may limit cross- country travel or construction activity at times when soils are dry or frozen or have snow cover. SITLA will determine what is "wet," "muddy," or "frozen' based on weather and field conditions at the time. The limitation does not apply to maintenance and operation of producing wells.

Occupancy or other surface disturbance shall not be allowed within 330 feet of the centerline or within the 100-year recurrence interval floodplain of perennial steams, except where authorized in writing by the SITLA (e.g., road crossings).

Occupancy or other surface disturbance shall not be allowed within 660 feet of springs, whether flowing or not. No vibroseis, drilling or blasting associated with seismic exploration shall be allowed withing 0.25 mile of any spring or water well.

During project construction, surface disturbance and vehicle travel shall be limited to the approved location and access routes. Any additional area needed must be approved by SITLA prior to use.

Vegetation removal necessitated by a construction project shall be confined to the limits of actual construction. Removed vegetation will be stockpiled for use in reclamation or removed form the construction site at the direction of SITLA.

## Reclamation

The reclamation plan shall be a part of the surface use plan of operations. The following are generally components of the reclamation plan.

All pits must be reclaimed to a natural condition similar to the rest of the reclaimed area, and must be restored to a safe and stable condition.

Reclamation shall start immediately upon completion of construction, unless prevented by weather conditions. Disturbed areas shall be restored to approximately the original contour.

Disturbed areas shall be revegetated after the site has been satisfactorily prepared. Site preparation may include ripping, contour furrowing, terracing, reduction of steep cut and fill

slopes, waterbarring, or other procedures.

Revegetation seed mixes have been established for the Project Area, and are provided in Appendix 2F. They are based on erosion control, forage production, elevation, soils, vegetation community composition, and precipitation requirements. Different seed mixes have been developed for temporary seedlings, and for final reclamation of sited in salt desert, sagebrush/grass, pinyon-juniper, mountain brush, and riparian habitats. Reclamation in riparian habitat shall also involve sedge and rush root plugs, willow cuttings, and cottonwood bare root stock plants. All seed mixes shall be free of noxious weeds.

Seedling shall be done by drilling on the contour whenever practical, or by other approved method. Where broadcast seeding is used, seeding shall take place after the soil surface is recontoured and scarified. A harrow or similar implement shall be dragged over the area to assure seed cover.

On all cut slopes, the seeding must extend from the bottom of the ditch to the top of the cut slope. On embankment slopes, the seeding must extend from the roadway shoulder to the toe of the slope. Seeding shall also be done on all borrow pit areas and on all sidecast slopes in areas of full bench construction.

Seeding and/or planting shall be repeated until satisfactory revegetation is accomplished, as determined by SITLA. Mulching, fertilizing, fencing or other practices may be required.

Seeding shall be done from October 1 to November 15, and from February 1 to March 31 (requires SITLA prior approval).

Sufficient topsoil to facilitate revegetation shall be segregated from subsoils during all construction operations and shall be returned to the surface upon completion of operations, where feasible. Topsoil stockpiles shall be revegetated or otherwise protected to prevent erosion and maintain some soil microflora and microfauna. Stockpiled topsoil shall be spread evenly over the recontoured area. All disturbed areas and vehicle tracks form overland access shall be ripped 4 to 12 inches deep within the contour.

Bonds are required for oil and gas operations on federal leases for protection pf the environment, including surface reclamation. Revegatation must be successfully established for release for the bond.

Reclamation and abandonment of pipelines and flowlines may require replacing fill on the original cuts, reducing and grading cut and fill slopes to conform to the adjacent terrain, replacement of surface soil material, waterbarring, and revegetating in accordance in accordance with a reclamation plan.

Wellsite reclamation shall include recounturing to re-establish natural contours where

desirable and practical.

After well plugging and abandonment, roads constructed by the operator not required for SITLA transportation system use shall be closed and obliterated. Reclamation may include ripping, scarifying, waterbarring, and barricading Stockpiled soil, debris and fill materials shall be replaced on the road bed to conform to the approved reclamation plan.

Water bars shall be constructed on road grades or slopes, if require by SITLA. Spacing of waterbreaks is dependent on slope and soil type. For most soil types, the following spacing shall be used:

| Slope | Spacing |
|---|---|
| 2% | 200 feet |
| 2-4% | 100 feet |
| 4-5% | 75 feet |
| >5% | 50 feet |

Revegetation on big game critical winter range shall include hand-planting of seedling browse plants and use of seedling protectors to provide protection against browsing in the first two years after planting.

Temporary erosion control measures such as mulch, jute netting, or other appropriate methods shall be used on unstable soils, steep slopes, and wetland areas to prevent erosion and sedimentation until vegetation becomes established.

## General Requirements

Precautions must be taken at all times to prevent wildfire. Operators shall be held responsible for suppression costs for any fires on public lands caused by operator's negligence. No burning of debris shall be allowed without specific authorization from SITLA.

Any campfires must be kept to a minimum size and utilize only downed dead wood.

Road construction must meet class II standards (Appendix 2C).

With SITLA approval, existing roads or trails may be improved (bladed) if impassable by vehicles or equipment. No widening or realignment shall be allowed unless approved by SITLA. Maintenance of roads outside lease or unit boundaries will require a SITLA right-of-way.

New trails may be constructed only when vehicle and equipment passage is impossible, and only with the concurrence of the SITLA. Any pushed trees are to be readily retrievable without additional disturbance, if needed for reclamation.

Reserve pits for oil and gas drilling operations may be required to be lined with commercial-grade bentonite or plastic liners sufficient to prevent seepage. At least half of the capacity shall be in a cut.

Prior to the use of insecticides, herbicides, fungicides, rodenticides, and other similar substances, and operator must obtain from SITLA approval of a written plan. The plan must describe the type and quantity of material to be used, the pest to be controlled, the method of application, the location for storage and disposal of containers, and other information that SITLA may require. A pesticide may be used only in accordance with it's registered uses and within other agency limitations. Pesticides must not be permanently stored on public lands.

## Water Resources

Existing fords shall be used for drainage crossings where possible. Low-water crossings shall use a cut-and-fill process or upgrade existing crossings unless use of culverts is specifically authorized.

Bridges and culverts shall allow adequate fish passage where applicable. Take-down (or free-floating) panels or water gates shall be installed on all fences that cross intermittent or perennial steam channels.

For construction projects lasting more than 30 days, portable chemical toilets shall be provided at all staging areas, bases of operations, and storage areas.

Soaps, detergents, or other nondegradable foreign substances shall not be used for washing in streams or rivers. Biodegradable soap may be used.

No oil, lubricants, or toxic substances may be drained onto the ground surface. Pads shall be designed so that any oil, lubricants, etc., shall drain into a collection system.

## Wetlands and Riparian Areas

Construction, development, and right-of-way in riparian areas shall be minimized. Where these areas must be disturbed, stipulations shall minimize impacts and require post-disturbance reclamation. Reclamation shall be closely monitored, and not considered complete until the desired vegetation is established.

## Wildlife

Restrictions on Construction Phase Activity: Prohibit construction phase activity described below, on big game high value and critical winter range during the period (December 1

- April 15). This condition would not apply to normal maintenance and operation of producing wells, described below.

Construction Phase Activity: Construction phase activity is considered to include all work associated with initial drilling and construction of facilities through completion, including installation of pumping equipment, connection with ancillary facilities and tie-in with pipelines necessary for product delivery.

Construction activities are not allowed to be initiated unless it is reasonable to believe that such work can be finished to a logical stopping point prior to December 1 of that year. Specific activities considered to be covered by the seasonal closure include all heavy equipment operations including but not limited to the following:

- Mobilization/Demobilization or operation of heavy equipment (crawler tractor, front end loader, backhoe, road grader, etc.)
- Construction activity (road construction or upgrading, pad, pipeline, powerline, ancillary facilities, etc.),
- Drilling activity (operator would not propose to initiate drilling activity if the project could not reasonably be expected to be finished to a logical stopping point by the December 1 date of theat year.
- Seismic operation, detonation of explosives.

This seasonal closure would not apply to reconnaissance, survey/design and /or flagging of project work or other similar activity not requiring actions listed for heavy equipment operation.

Production Phase: A coalbed methane well is considered to be in production phase when the well and ancillary facilities are completed to the point that they are capable of production and delivering product for sale. It is noted that heavy equipment operation may be necessary in the performance of maintenance and operation of producing wells.

Restriction on Non Emergency Workover Operations: Non-emergency workover operations (defined below) are required to be scheduled on big game high value winter range outside the December 1 to April 15 date of the seasonal closure. The operator will be required to submit Sundry notices to SITLA in advance of workover operations proposed between December 1 and April 15. Sundry notices submitted as emergency work, may require independent corroboration by SITLA staff prior to work proceeding. Should SITLA object to the emergency designation of the sundry notice, SITLA would make notification of the objection within five working days of receipt of the sundry notice. In the absence of such notification or in the event of corroboration with the sundry notice, the operator would be permitted to proceed with the workover operation.

Non-emergency Workover Operations: Workover operations to correct or reverse a gradual loss of production over time (loss of production of five percent or less over a 60 day

period) is considered to be routine or non-emergency workover operations and would not be permitted during the December 1 to April 15 time frame.

Emergency Workover Operations: Emergency work over operations are defined as downhole equipment failure problems or workover operations necessary to avoid shut-in of the well or to avoid an immediate safety or environmental problem. Loss of production greater than five percent within a 60 day period is indicative of pump failure and will be treated as an emergency workover operation.

The subject permit application is proposed within critical winter range and subject to acre for acre mitigation for surface disturbance on critical winter range. The following condition comes from a cooperative agreement between the River Gas Corporation, BLM-Price Field Office, the Utah Division of Wildlife Resources and the National Fish and Wildlife Foundation, under which the River Gas Corporation agrees to the following:

- Contribute $1,250.00 (1996 dollars) for each well interest permitted and drilled by RGC (or on behalf of RGC by its contractor) on big game critical winter range as depicted in the FEIS Price Coalbed Methane Project Area. (Wells meeting the above criteria for which payment will be required, will be referred to as "subject wells".) This contribution will be adjusted annually for inflation based on the Consumer Price Index (CPI), see Section II.C.6 for the referenced source used for the determination of the CPI and the date in which this annual adjustment will go into effect.

  Since this mitigation program is designed to address impacts of all big game critical winter range surface disturbance (roads, well pads, pipelines, etc.), contributions will be required regardless of the success or failure of the subject well to produce.

  - The recorded date for spudding for each subject well (the first boring of a hole during the drilling of a well) will serve as the reference date triggering the requirement for the mitigation contribution.

  - Contributions will be submitted (in the form of an Corporate check, cashiers check or wire transfer) directly to the National Fish and Wildlife Foundation by the 30th of each month for all subject wells spudded in the preceding month.

  - All contributions will be made payable to the "National Fish and Wildlife Foundation re: Proj 97-260" and reference the "Price Field Office Wildlife Habitat Impact Mitigation Fund (RGC)".

Exploration, drilling or other development activity shall only be allowed from June 16 to

March 31 in sage grouse strutting/nesting areas. This limitation does not apply to maintenance and operation of producing wells.

**Raptor Nest Site Protection Measures**

The subject permit application is proposed within or near known suitable raptor nesting habitat. In order to avoid potential adverse affects to nesting raptors protected under the Migratory Bird Treaty Act and/or the Bald Eagle Protection Act, the operator must comply with all applicable provisions below.

Provisions check marked below are directly applicable to this action, based on available data at the time of this review. Any other provisions, listed below (even if not check marked) may become applicable to this action as updated raptor data becomes available.

[ ] Survey Required: Conduct raptor surveys to determine the status of known nests and verify presence of additional nests in the affected area of this action. Surveys are to be conducted by consultants qualified to conduct such surveys and approved by SITLA. All surveys would be conducted by helicopter during May of each year unless otherwise provided by SITLA. The surveys are required to be completed in the same year as the proposed drilling/construction so that current nest activity status data are available prior to Application for Permit to Drill approval. Cost for surveys and preparation of a report of the findings of the survey would be the obligation of the lease holder.

[ X ] Raptor Nest Site Bufferzone Permanent Occupancy: Upon the finding of the above survey (or other appropriate documentation) that the action lies within 0.5 miles of a raptor nest occupied (defined below) in any of the three years preceding the proposed date of construction, the action would be subject to the no surface occupancy provision stated below and provided for in the Price CBM FEIS.

> Permanent surface distrubance and occupancy (i.e. oil and gas production facilities) is prohibited within 0.5 miles of raptor nests which have been documented as occupied within three years.

The provision will apply as long as the nest status remains unchanged (i.e. kocumented as occupied within any of the three years preceding the proposed date of construction. If the nest is documented as unoccupied for a period of three or more consecutive years, it will be deemed to have been abandoned and the action will no longer be subject to the nor surface occupancy provision.

In the event an action involving a permanent facility, as described above, is proposed within the 0.5 mile bufferzone, SITLA will initiate a site specific evaluation in coordination with the USFWS. This coordination will range from informal contacts that can be accomplished by telephone, to field coordination which could intail the delineation of a site specific bufferzone to

address site terrain features such as topographic and vegetative screening. Upon completion of the site specific evaluation, SITLA will notify the holder of the findings. If the site specific evaluation determines that the action can be accomodated with no significant adverse affects to the current or future productivity of the nest, the no surface disturbance/occupancy referenced above would not be applicable.

[ X ] Raptor Nest Site Bufferzone Temporary Occupancy: Any temporary surface disturbance and occupancy (i.e. road and pipeline construction, etc.) associated with this permit, occurring within 0.5 miles of a raptor nest documented as occupied in one or more of the three years preceding the proposed date of construction must be conducted outsied the nesting period of February 1 to July 15. This will include but not be limited to road construction or upgrading required to reach this well location. If such work is required to access this location with heavy equipment, the seasonal closure of February 1 to July 15 will also apply to the drilling of this well.

[ X ] Maintenance and Operation of Existing Wells within 0.5 miles of Raptor Nests: In the event an action is authorized and constructed and a raptor nest is subsequently built within 0.5 miles of the development, maintenance and operations involving workovers or heavy equipment operation under this action will be subject to the following conditions and notifications.

The proponent is required to submit (at least 5 days in advance of proposed work) a sundry notice for all work over or maintenance operations requiring use of heavy equipment proposed during the raptor breeding season (February 1 - July 15) and within the 0.5 mile bufferzone of any known raptor nest site. Upon receipt of this notification SITLA in consultation with DWR and USFWS would issue a determination on the activity status of the affected raptor nest. If the nest is found to be occupied, site specific protection measeures would be developed to protect the nesting raptors and prevent conditions or actions that may result or contribute to a taking as defined under the Bald Eagle Protection Act and or the Migratory Bird Treaty Act.

To avoid the necessity for this provision, the operator is encouraged to schedule all such work outside of the nesting period on wells subject to this provision.

Occupied Nest Site Definition: An occupied raptor nest is defined for the purposes of this stipulation, as any nest site exhibiting physical evidence of current use by raptors. Evidence may include but is not limited to: presence of raptors (adults, eggs or young) at the nest or within the nesting territory, presence of greenery in the nest, and/or presence of current year's whitewash at the nest or in the immediate vicinity of the nest.

**Cultural Resources**

All areas subject to surface disturbance, or Areas of Potential Effect (APE), which have not been previously inventoried for cultural resources to SITLA standards, must be inventoried prior to approval of an APD or other actions. The APE is defined as any area that may be subject to direct or indirect impacts to cultural resources by elements of the development project. The zone of the APE shall vary in size in accordance with the projected levels of sensitivity for cultural resources at the location of any development. In low sensitivity areas, the APE shall be defined as the area subject to direct impacts through surface disturbing activities. In areas of medium sensitivity, the APE shall be expanded to account for potential indirect impacts: intensive inventory shall occur on all well pads plus additional 10 acres surrounding each pad; a 150- foot corridor center on roads, flowlines, and other facilities shall be inventoried as the APE. In high sensitivity areas, the APE shall include the well pad and 10 acres surrounding the well location' and the APE for roads, flowlines, and other facilities shall be area of direct ground disturbance and a 300-foot zone on all sides of the facility.

Cultural resource inventories shall be conducted in consultation with SITLA by authorized cultural resource professionals. Prior to field work, a records check must be conducted to identify previous inventories ans recorded properties. During the course of inventories, previously unrecorded sites must be recorded on standard forms, photographed, and mapped. Cultural resources shall be evaluated , and a recommendation on eligibility to the National Register of Historic Places shall be made. SITLA shall make all Determinations of Eligibility. A report shall be prepared for each development or series of developments documenting the inventory methods, results, description of the sites within the APE, recommendations on National Register eligibility, and shall include proposed mitigating measures.

SITLA shall consult with the State Historic Preservation Officer (SHPO) and the President 's Advisory Council on Historic Preservation (ACHP) as mandated by the National Historic Preservation Act of 1966 (as amended), in accordance with guidelines set forth in a Programmatic Agreement among BLM, SHPO, ACHP, and RGC. This document has been completed as a legally binding agreement and is referenced in the Record of Decision for the overall project. Site avoidance, detailed site recordation, and site protection shall be the preferred treatments, but mitigation of National register eligible properties through date recovery may take place where avoidance is not prudent or feasible, after consultation as specified in the Programmatic Agreement. SITLA shall submit a treatment plan to SHPO, ACHP and to other affected parties as may be appropriate for a 30-day consultation prior to implementation of data recovery efforts.

SITLA shall notify, consult , and/ or coordinate with Indian tribes, traditional leaders, and other interested parties as required by various statues (NEPA, American Indian Religious Freedom Act [AIRFA], National Historic Preservation Act [NHPA], Federal Land Policy and Management Act [FLPMA], Archaeological Resources Protection Act [ARPA], and the Native

American Graves Protection act [NAGPRA]). In particular, SITLA shall attempt to elicit information concerning the potential effects of any action resulting from the Proposed Action on tradition cultural properties, including areas of traditional use and areas of religious or cultural importance to tribes. Indian tribes shall be afforded a minimum of 30 days for review , comments and consultation prior to issuance of a decision; under certain circumstances additional time must be afforded. A 30- day notification period is required by ARPA prior to issuance of any Cultural Resource Use Permits of r the excavation and removal; of cultural resources from public lands administered by SITLA. NAGPRA requires notification and consultation with affected tribes regarding the potential to encounter human remains during the course of a project, and provides for cessation of work, and the notification and consultation with tribes should inadvertent discovery of human remains occur during the course of a project. SITLA shall assure adherence to these statues.

If a previously unknown property is encountered during construction or operation of the facilities, or is a previously planned undertaking shall affect a known historic property in an unanticipated manner, all work that might adversely affect the property shall cease until SITLA can evaluate the significance of the property and assess the effect of the undertaking. SITLA shall consult with SHPO on both a determination of eligibility and the assessment of effect on an expeditious manner. If the site is determined eligible and shall be affected by the undertaking, SITLA shall ensure that RGC prepares an avoidance or treatment plan for the property.

If humans remains are discovered at any point during the project, they shall be treated according to state and federal law, and according to the wishes of concerned Native American tribes, pursuant to the Native American Graves Protection and Repatriation Act. The county sheriff, coroner, land-managing official, and State Archaeologist shall be notified. The remains shall not be disturbed until the appropriate officials have examined them

**Land Use**

On split estate lands, where the surface is privately owned and the subsurface is owned by SITLA, SITLA will recommend the same environmental protection standards as shall be used for SITLA surface. The operator is responsible for making a good faith effort ro reach an agreement with the privates surface owner which considers the recommended SITLA protection measures and formalizes requirements for the protection of surface resources and/or damages.

Each application for permit to drill or application to conduct other surface disturbing activities shall contain the name, address and telephone number of the surface owner. The SITLA shall invite the surface owner to participate in any on-site inspection that is held. The operator is responsible for making access arrangements with the private surface owner prior to entry.

Incorporated cities are categorized by BLM as no Lease. Within the Project Area, BLM leases do not permit surface occupancy or other activity for Carbon County Airport, Carbon County Recreation Complex, and Carbon County sanitary landfill.

## Livestock Management

Existing range and livestock management facilities, such as fences wells, reservoirs, watering pipelines, troughs and trailing systems, shall not be disturbed without prior approval of SITLA. Where disturbance is necessary, the facility shall be returned to its original condition.

Newly constructed range improvements such as fences and reservoirs must meet SITLA standards. When it is necessary to gain access across a fenceline for construction purposes, the fence must be braced. Four-inch timber or equivalent must be installed and the gateway kept closed when not in actual use.

All gates found closed during the course of the operation must be reclosed after each passage of equipment and personnel. Cattle guards shall be installed in fences on all collector roads. Either a cattle guard or a gate shall be required on local and resource to roads to control livestock movement or vehicular access.

If road construction cuts through natural topography that serves as a livestock barrier, a fence shell be constructed to replace it. The fence shall be installed with a cattle guard or gate to control livestock and vehicle movement or access.

Access to grazing areas shall be maintained at all times. Livestock operators shall have access to grazing and trailing areas where road closures are implemented during periods of authorized livestock use.

## Visual Resources

Roads through timbered areas shall take a curvilinear path to reduce sight distances.

Upon completion of the project the area and access roads shall be reclaimed to as near the original condition as possible. All disturbed areas shall be recontoured to blend as nearly as possible with te natural topography. All berms shall be removed and all cuts (including roads) filled.

Construction areas and access roads shall be kept liter-free. The operator must provide a trash pit or trash cage, and trash must be collected and contained during the operation. All garbage, trash, flagging, lath, etc., shall be removed from the area and hauled to an authorized dump site.

Construction and facilities shall be in conformance with Visual Resource Management (VRM) objectives for the VRM classes in the Project Area. All surface facilities in the Project Area shall be located to minimize disturbance of the visual horizon and painted to blend in with the surrounding landscape.

Colors shall be specified by the SITLA.

## MISC. ITEMS

MUD PIT:_____Lined _____Unlined _____Determine at construction

Comments:_____

_____

_____

_____

_____

_____

_____

# APPENDIX 2F

## SEED MIXTURES FOR THE PRICE COALBED METHANE PROJECT

Seed mixtures have been developed for general land types throughout the project area. They are based on erosion control, forage production, elevation, soils, vegetation communities and average annual precipitation zones. The mixtures show the plant species and the pounds per acre of pure live seed (PLS) to be planted.

The following seed mixture will be planted along service road borrow ditches, around the edge of drill pads with a production well, and surrounding other production and maintenance facilities. The purpose of this seeding is to provide a "green strip" buffer to minimize fire hazards and prevent invasion and establishment of noxious weeds in areas that will receive contained disturbance for the life of these project areas.

**Green Strip Area**

NOTES: _____

| Common Plant Name | Scientific Name | Pounds per acre/PLS* |
|---|---|---|
| Forage kochia | Kochia prostra | 2 |
| Wyoming big sagebrush | Artemisia tridentata wyominggensis Var. Gordon Creek | 1 |
| Douglas low rabbitbrush | Chiysothamnus viscidiflorus | 1 |
| Yellow sweetclover | Melilotus officinalis | 1 |
| Small burnet | Sanguisorba minor | 1 |
| Bottlebrush squirreltail | Elymus elymoides | 1 |
| Inertmediate wheatgrass | Thinopyrum intermedium | 1 |
| | Total | 8 |

The following seed mixtures are for areas that will receive final reclamation. Areas would be planted to protect them form soil erosion and to restore forage production.

**Salt Desert Areas**

NOTES: _____

| Common Plant Name | Scientific Name | Pounds per acre/PLS* |
|---|---|---|
| Grasses | | |
| Indian ricegrass | Oryzopsis hymenoides | 2 |
| Squirreltail | Elymus elymoides | 2 |
| Galleta | Hilaria jamesii | 2 |
| Forbs | | |
| Lewis flax | Linum perenne lewisii | 1 |
| Palmer penstemon | Penstemon palmerii | 1 |
| Gooseberryleaf glodemallow | Sphaeralcea grossulariifolia | 0.5 |
| Shrubs | | |
| Forage kochia | Kochia prostrata | 2 |
| Rubber rabbitbrush | Chrysothamnus nauseosus | 1 |
| Fourwing saltbush | Atriplex canescens | 2 |
| Winterfat | Krascheninnikovai (Eurotia) lanta | 2 |
| | Total | 15.5 |

**Sagebrush/ Grass Areas**

NOTES: _____

| Common Name | Scientific Name | Pounds per acre/PLS* |
|---|---|---|
| Grasses | | |
| Indian ricegrass | Oryzopsis hymenoides | 2 |
| Squirreltail | Elymus elymoides | 2 |
| Thickspike wheatgrass | Elymus lanceolatus | 1 |
| Crested wheatgrass | Agropyron desertorum | 2 |
| Forbs | | |
| Lewis flax | Linum perenne lewisii | 1 |
| Palmer penstemon | Penstemon palmerii | 1 |
| Small burnet | Sanguisorba minor | 1 |

| | | |
|---|---|---|
| Shrubs | | |
| Forage kochia | Kochia prostrata | 2 |
| Whitestem rabbitbrush | Chrysothamnus nauseosus albicaulis | 1 |
| Fourwing saltbush | Atriplex canescens | 2 |
| Wyoming big sagebrush | Artmesia tridentata | 1 |
| | Total | 16 |

**Pinyon/Juniper Areas**

NOTES: _____

| Common Name | Scientific Name | Pounds per acre/PLS* |
|---|---|---|
| Grasses | | |
| Thickspike wheatgrass | Elymus lanceolatus | 1.5 |
| Inertmediate wheatgrass | Thinopyrum intermedium | 1.5 |
| Squirreltail | Elymus elymoides | 2 |
| Crested wheatgrass | Agropyron desertorum | 2 |
| Forbs | | |
| Lewis flax | Linum perenne lewisii | 1 |
| Palmer penstemon | Penstemon palmerii | 1 |
| Small burnet | Sanguisorba minor | 1 |
| Shrubs | | |
| Forage kochia | Kochia prostrata | 2 |
| Fourwing saltbush | Atriplex canescens | 2 |
| Wyoming big sagebrush | Artmesia tridentata wyominggensis var. Gordon Creek | 1 |
| Antelope bitterbrush | Purshia tridentata | 1 |
| True Mt. mahogany | Cercocarpus montanus | 1 |
| | Total | 17 |

**Mountain Brush Areas**

NOTES: _____

| Common Name | Scientific Name | Pounds per acre/PLS* |
|---|---|---|
| Grasses | | |
| Sheep fescue | Festuca ovina | 2 |
| Smooth brome | Bromus inermis | 2 |
| Slender wheatgrass | Elymus trachycaulus | 2 |
| Intermediate wheatgrass | Elytirgia intermedia | 1.5 |
| Russian wildrye | Psathyrostachys juncea | 1 |
| Forbs | | |
| Lewis flax | Linum perenne lewisii | 1 |
| Rocky Mt. penstemon | Penstemon strictus | 1 |
| Sainfoin | Onobrychis viciifolia | 0.5 |
| Shrubs | | |
| Forage kochia | Kochia prostrata | 2 |
| Wyoming big sagebrush | Artmesia tridentata wyominggensis var. Gordon Creek | 0.5 |
| Antelope bitterbrush | Purshia tridentata | 1 |
| Mountain big sagebrush | Artemisia tridentata var. vaseyana | 0.5 |
| True Mt. mahogany | Cercocarpus montanus | 1 |
| | Total | 16 |

**Riparian Areas**

NOTES: _____

| Common Plant Name | Scientific Name | Pounds per acre/PLS* |
|---|---|---|
| Grasses and Grasslike | | |
| Reed canarygrass | Phalaris arundinacea | 2 |
| Streambank wheatgrass | Elymus lanceolatus riparium | 4 |
| **Nebraska sedge | Carex nebrascensis | |
| **Baltic rush | Juncus balticus | |
| Shrubs | | |
| **Coyote pillow | Salix exqua | |
| Skunkbush sumac | Rhus trilobata var. trilobata | 2 |
| | Total | 8 |

Trees
** Narrowleaf cottonwood Populus augustifolia
* Seeding rate is listed as pounds per acre of pure live seed (PLS) drilled. Rate is increased by 50 percent if broadcast seeded.
Formula: pure live seed (PLS) =%seed purity x %seed gemination.
** Sedge and rush root mass plugs, willow cuttings and cottonwood bare stock plantings will be done in the spring, within one month after water flows, when the riparian water table and soil moisture will ensure planting success.

FORM 9

STATE OF UTAH

DIVISION OF OIL, GAS AND MINING

CONFIDENTIAL

# SUNDRY NOTICES AND REPORTS ON WELLS

Do not use this form for proposals to drill new wells, deepen existing wells, or to reenter plugged and abandoned wells.
Use APPLICATION FOR PERMIT TO DRILL OR DEEPEN form for such proposals.

5. Lease Designation and Serial Number:

6. If Indian, Allottee or Tribe Name: N/A

7. Unit Agreement Name: N/A

8. Well Name and Number: Utah 01-209

9. API Well Number: 43-007-30467

10. Field or Pool, or Wildcat: Drunkards Wash

1. Type of Well: OIL ☐ GAS ☒ OTHER:

2. Name of Operator: River Gas Corporation

3. Address and Telephone Number: 1305 South 100 East, Price, UT 84501 (435)637-8876

4. Location of Well
Footages: 2271' FSL, 1251' FEL
QQ, Sec., T., R., M.: NE/4, SE/4, SEC.01, T15S, R8E, SLB&M
County: Carbon
State: UTAH

11. **CHECK APPROPRIATE BOXES TO INDICATE NATURE OF NOTICE, REPORT, OR OTHER DATA**

**NOTICE OF INTENT**
(Submit in Duplicate)

- ☐ Abandon
- ☐ Repair Casing
- ☐ Change of Plans
- ☐ Convert to Injection
- ☐ Fracture Treat or Acidize
- ☐ Multiple Completion
- ☐ Other
- ☐ New Construction
- ☐ Pull or Alter Casing
- ☐ Recomplete
- ☐ Reperforate
- ☐ Vent or Flare
- ☐ Water Shut-Off

Approximate date work will start

**SUBSEQUENT REPORT**
(Submit Original Form Only)

- ☐ Abandon *
- ☐ Repair Casing
- ☐ Change of Plans
- ☐ Convert to Injection
- ☐ Fracture Treat or Acidize
- ☒ Other Weekly Report
- ☐ New Construction
- ☐ Pull or Alter Casing
- ☐ Reperforate
- ☐ Vent or Flare
- ☐ Water Shut-Off

Date of work completion

Report results of Multiple Completions and Recompletions to different reservoirs on WELL COMPLETION OR RECOMPLETION REPORT AND LOG form.

12. DESCRIBE PROPOSED OR COMPLETED OPERATIONS (Clearly state all pertinent details, and give pertinent dates. If well is directionally drilled, give subsurface locations and measured and true vertical depths for all markers and zones pertinent to this work.)

See Attached

RECEIVED
OCT 4 1999
DIV. OF OIL, GAS & MINING

13.

Name & Signature: Frankie Hathaway *Frankie Hathaway* Title: Administrative Assistant Date: 9/24/1999

(This space for state use only)

(4/94) (See Instructions on Reverse Side)

DAILY WELL REPORT

CONFIDENTIAL

River Gas Corporation
Utah 1-209
2271' FSL, 1251' FEL
NE/4, SE/4, Sec. 1, T15S, R8E, SLB&M
CARBON COUNTY, UTAH
SURVEYED ELEVATION: 6814'
API #43-007-30467
DRILLING CONTRACTOR: Pense Bros. Rig #2



**DRILLING**

Day 1. 9/21/99. Current Depth: 410'. Present Operations: N/up BOP and Manifold. Total Rotating Hrs: 4. 1:00 pm-4:00 pm Move to location and R/up. 4:00 pm- 5:00 pm Service equipment, **Spud @ 5:00 pm on 9/20/99.** 5:00 pm- 6:00 pm Drill and set 5' 12-3/4 conductor pipe. 6:00 pm -9:30 pm N/up and drill 410' 11" hole. 9:30 pm-10:15 pm TOOH. 10:15 pm-11:20 pm RIH w/ 394'10" 8-5/8 casing. 11:20pm- 11:50 pm R/up Dowell and cement surface pipe close valve @ 11:50 pm 9/20/99. 11:50 pm- 12:30 pm R/d Dowell. 12:30 pm- 5:30 am WOC. 5:30 am-7:00 am N/ up BOP and manifold. [redacted].

Day 2. 9/22/99. Current Depth: 1970'. Present Operations: Condition hole. Total Rotating Hrs: 15.5. 7:00 am-8:00 am repair hydraulic line. 8:00 am-9:30 am test BOP. 9:30 am-1:00 pm Work on rig. /1:00 pm-2:00 pm TIH drill 7-7/8 hole @ 500'. 2:00 pm- 6:00 pm drill 500'-1070'. 6:00 pm-12:/00 am Drill 1070'-1970'. 12:00 am-3:00 am TOOH. 3:00 am-4:00 am RIH w/7-7/8 tricone and drill collars. 4:00 am-6:30 am Finish TIH. 6:30 am-7:00 am Condition hole. [redacted]

Day 3. 9/23/99. Current Depth: 3740' Present Operations: Drilling @ 3740. 7:00 am -9:00 am Drilling 7-7/8 hole @ 2055. 9:00 am-2:00 pm Work on rig. 2:00 pm-6:00 pm Drill 2095'-2535'. 6:00 pm-12:00 am Drill 2535'-3285'. 12:00 am-7:00 am Drill 3285'-3740'. [redacted]

Day 4. 9/24/99. Current Depth: 3750'. Present Operations: Moving off location. Total Rotating Hrs: 35. 7:00 am-7:30 am Drill 7-7/8" hole. **TD @ 3750' on 9/23/99 @ 7:30 am.** 7:30 am-8:15 am Clean hole. 8:15 am- 11:00 am Pull rods. 11:00 am-2:00 pm Mix and pump mud. 2:00 pm-4:00 pm Circulate to bottom. 4:00 pm- 6:30 pm On bottom at 4:30 pm, Circulate 2 hors. 6:30 pm-7:00 pm Short trip, on bottom @ 7:30 pm. 7:30 pm-1:00 am TOOH. 1:00 am-1:30 am RU loggers. 1:30 am-3:00 am Log hole. 3:00 am- 4:00 am RD loggers, release rig. [redacted]

FORM 9

STATE OF UTAH

DIVISION OF OIL, GAS AND MINING

CONFIDENTIAL

# SUNDRY NOTICES AND REPORTS ON WELLS

Do not use this form for proposals to drill new wells, deepen existing wells, or to reenter plugged and abandoned wells. Use APPLICATION FOR PERMIT TO DRILL OR DEEPEN form for such proposals.

5. Lease Designation and Serial Number:

6. If Indian, Allottee or Tribe Name: N/A

7. Unit Agreement Name: N/A

1. Type of Well: OIL ☐ GAS ☒ OTHER:

8. Well Name and Number: Utah 1-209

2. Name of Operator: River Gas Corporation

9. API Well Number: 43-007-30467

3. Address and Telephone Number: 1305 South 100 East, Price, UT 84501 (435)637-8876

10. Field or Pool, or Wildcat: Drunkards Wash

4. Location of Well

Footages: 2271' FSL, 1251' FEL

County: Carbon

QQ, Sec., T., R., M.: NE/4, SE/4, SEC.01, T15S, R8E, SLB&M

State: UTAH

11. **CHECK APPROPRIATE BOXES TO INDICATE NATURE OF NOTICE, REPORT, OR OTHER DATA**

**NOTICE OF INTENT**
(Submit in Duplicate)

- ☐ Abandon
- ☐ Repair Casing
- ☐ Change of Plans
- ☐ Convert to Injection
- ☐ Fracture Treat or Acidize
- ☐ Multiple Completion
- ☐ Other
- ☐ New Construction
- ☐ Pull or Alter Casing
- ☐ Recomplete
- ☐ Reperforate
- ☐ Vent or Flare
- ☐ Water Shut-Off

Approximate date work will start

**SUBSEQUENT REPORT**
(Submit Original Form Only)

- ☐ Abandon *
- ☐ Repair Casing
- ☐ Change of Plans
- ☐ Convert to Injection
- ☐ Fracture Treat or Acidize
- ☒ Other Weekly Report
- ☐ New Construction
- ☐ Pull or Alter Casing
- ☐ Reperforate
- ☐ Vent or Flare
- ☐ Water Shut-Off

Date of work completion

Report results of Multiple Completions and Recompletions to different reservoirs on WELL COMPLETION OR RECOMPLETION REPORT AND LOG form.

12. DESCRIBE PROPOSED OR COMPLETED OPERATIONS (Clearly state all pertinent details, and give pertinent dates. If well is directionally drilled, give subsurface locations and measured and true vertical depths for all markers and zones pertinent to this work.)

See Attached

ORIGINAL

RECEIVED
OCT 6 1999
DIV. OF OIL, GAS & MINING

13.

Name & Signature: Frankie Hathaway *Frankie Hathaway* Title: Administrative Assistant Date: 10/1/1999

(This space for state use only)

(4/94)

(See Instructions on Reverse Side)

DAILY WELL REPORT

CONFIDENTIAL

River Gas Corporation
Utah 1-209
2271' FSL, 1251' FEL
NE/4, SE/4, Sec. 1, T15S, R8E, SLB&M
CARBON COUNTY, UTAH
SURVEYED ELEVATION: 6814'
API #43-007-30467
DRILLING CONTRACTOR: Pense Bros. Rig #2



**DRILLING**

Day 1. 9/21/99. Current Depth: 410'. Present Operations: N/up BOP and Manifold. Total Rotating Hrs: 4. 1:00 pm-4:00 pm Move to location and R/up. 4:00 pm- 5:00 pm Service equipment, **Spud @ 5:00 pm on 9/20/99.** 5:00 pm- 6:00 pm Drill and set 5' 12-3/4 conductor pipe. 6:00 pm -9:30 pm N/up and drill 410' 11" hole. 9:30 pm-10:15 pm TOOH. 10:15 pm-11:20 pm RIH w/ 394'10" 8-5/8 casing. 11:20pm- 11:50 pm R/up Dowell and cement surface pipe close valve @ 11:50 pm 9/20/99. 11:50 pm- 12:30 pm R/D Dowell. 12:30 pm- 5:30 am WOC. 5:30 am-7:00 am N/ up BOP and manifold. [redacted]

Day 2. 9/22/99. Current Depth: 1970'. Present Operations: Condition hole. Total Rotating Hrs: 15.5. 7:00 am-8:00 am repair hydraulic line. 8:00 am-9:30 am test BOP. 9:30 am-1:00 pm Work on rig. /1:00 pm-2:00 pm TIH drill 7-7/8 hole @ 500'. 2:00 pm- 6:00 pm drill 500'-1070'. 6:00 pm-12:/00 am Drill 1070'-1970'. 12:00 am-3:00 am TOOH. 3:00 am-4:00 am RIH w/7-7/8 tricone and drill collars. 4:00 am-6:30 am Finish TIH. 6:30 am-7:00 am Condition hole. [redacted]

Day 3. 9/23/99. Current Depth: 3740' Present Operations: Drilling @ 3740. 7:00 am -9:00 am Drilling 7-7/8 hole @ 2055. 9:00 am-2:00 pm Work on rig. 2:00 pm-6:00 pm Drill 2095'-2535'. 6:00 pm-12:00 am Drill 2535'-3285'. 12:00 am-7:00 am Drill 3285'-3740'. [redacted]

Day 4. 9/24/99. Current Depth: 3750'. Present Operations: Moving off location. Total Rotating Hrs: 35. 7:00 am-7:30 am Drill 7-7/8" hole. **TD @ 3750' on 9/23/99 @ 7:30 am.** 7:30 am-8:15 am Clean hole. 8:15 am- 11:00 am Pull rods. 11:00 am-2:00 pm Mix and pump mud. 2:00 pm-4:00 pm Circulate to bottom. 4:00 pm- 6:30 pm On bottom at 4:30 pm, Circulate 2 hors. 6:30 pm-7:00 pm Short trip, on bottom @ 7:30 pm. 7:30 pm-1:00 am TOOH. 1:00 am-1:30 am RU loggers. 1:30 am-3:00 am Log hole. 3:00 am- 4:00 am RD loggers, release rig. [redacted]

Day 5. 9/25/99. Current Depth: 3750'. Present Operations: Scraper run. 8:30 am-3:30 pm Move rig to location. RU and prepare to run csg spot catwalk and piperacks. Unload csg and remove thread protectors, tally top row, pick up 5-1/2" shoe and 35 jts 5/1'2" 17# N-80 csg. Tally bottom row, pick up 51 jts 5-1/2" 17# csg. Total shoe and 86 jts land at 3732.36'. RU Dowell to cement, pump cement job, plug down @ 3:35 pm 9/24/99. [redacted]

9/26/99. Completion Report. Change over to run tbg, ND BOP, screw on tbg head, wait for catwalk and racks to be moved and tbg to arrive. Pick up 4-3/4" bit, 4-3/4" csg scraper and 120

DAILY WELL REPORT

CONFIDENTIAL

River Gas Corporation
Utah 1-209
2271' FSL, 1251' FEL
NE/4, SE/4, Sec. 1, T15S, R8E, SLB&M
CARBON COUNTY, UTAH
SURVEYED ELEVATION: 6814'
API #43-007-30467
DRILLING CONTRACTOR: Pense Bros. Rig #2



9/26/99. Completion report cont'd: jts 2-7/8" J-55 tbg. Tagged at 3730'. POOH w/tbg, scraper and bit. Change over to run csg, rack out and rig down. [redacted]

FORM 9

STATE OF UTAH

DIVISION OF OIL, GAS AND MINING

CONFIDENTIAL

# SUNDRY NOTICES AND REPORTS ON WELLS

Do not use this form for proposals to drill new wells, deepen existing wells, or to reenter plugged and abandoned wells.
Use APPLICATION FOR PERMIT TO DRILL OR DEEPEN form for such proposals.

5. Lease Designation and Serial Number:

6. If Indian, Allottee or Tribe Name: N/A

7. Unit Agreement Name: N/A

1. Type of Well: OIL ☐ GAS ☒ OTHER:

8. Well Name and Number: Utah 1-209

2. Name of Operator: River Gas Corporation

9. API Well Number: 43-007-30467

3. Address and Telephone Number: 1305 South 100 East, Price, UT 84501 (435)637-8876

10. Field or Pool, or Wildcat: Drunkards Wash

4. Location of Well
Footages: 2271' FSL, 1251' FEL
County: Carbon
QQ, Sec., T., R., M.: NE/4, SE/4, SEC.01, T15S, R8E, SLB&M
State: UTAH

11. **CHECK APPROPRIATE BOXES TO INDICATE NATURE OF NOTICE, REPORT, OR OTHER DATA**

**NOTICE OF INTENT**
**(Submit in Duplicate)**

- ☐ Abandon
- ☐ Repair Casing
- ☐ Change of Plans
- ☐ Convert to Injection
- ☐ Fracture Treat or Acidize
- ☐ Multiple Completion
- ☐ Other _____
- ☐ New Construction
- ☐ Pull or Alter Casing
- ☐ Recomplete
- ☐ Reperforate
- ☐ Vent or Flare
- ☐ Water Shut-Off

Approximate date work will start

**SUBSEQUENT REPORT**
**(Submit Original Form Only)**

- ☐ Abandon *
- ☐ Repair Casing
- ☐ Change of Plans
- ☐ Convert to Injection
- ☐ Fracture Treat or Acidize
- ☒ Other Spud Notice
- ☐ New Construction
- ☐ Pull or Alter Casing
- ☐ Reperforate
- ☐ Vent or Flare
- ☐ Water Shut-Off

Date of work completion _____

Report results of Multiple Completions and Recompletions to different reservoirs on WELL COMPLETION OR RECOMPLETION REPORT AND LOG form.

12. DESCRIBE PROPOSED OR COMPLETED OPERATIONS (Clearly state all pertinent details, and give pertinent dates. If well is directionally drilled, give subsurface locations and measured and true vertical depths for all markers and zones pertinent to this work.)

Date Spud: 9/20/1999 @ 5:00 pm.
Drilling Contractor: Pense Bros. Rig#2

RECEIVED
OCT 18 1999
DIV. OF OIL, GAS & MINING

13.

Name & Signature: Frankie Hathaway *Frankie Hathaway* Title: Administrative Assistant Date: 10/8/1999

**(This space for state use only)**

(4/94)

(See Instructions on Reverse Side)

STATE OF UTAH
DIVISION OF OIL, GAS AND MINING

ENTITY ACTION FORM - FORM 6

OPERATOR River Gas Corporation
ADDRESS 1305 South 100 East
Price, UT 84501

OPERATOR ACCT. NO. N

| ACTION CODE | CURRENT ENTITY NO. | NEW ENTITY NO. | API NUMBER | WELL NAME | WELL LOCATION QQ | SC | TP | RG | COUNTY | SPUD DATE | EFFECTIVE DATE |
|---|---|---|---|---|---|---|---|---|---|---|---|
| B | 99999 | 11256 | 43-007-30405 | Utah 29-193 | NW/NE | 29 | 14S | 9E | Carbon | 9/17/99 | |
| WELL 1 COMMENTS: 991013 entity added; Drunkards Wash u/"Fer A-C" KDR CONFIDENTIAL | | | | | | | | | | | |
| A | 99999 | 12573 | 43-007-30467 | Utah 1-209 | NE/SE | 1 | 15S | 8E | Carbon | 9/21/99 | |
| WELL 2 COMMENTS: 991013 entity added; Drunkards Wash u/non P.A. KDR CONFIDENTIAL | | | | | | | | | | | |
| A | 99999 | 12574 | 43-007-30487 | Utah 7-307 | NW/NW | 7 | 15S | 8E | Carbon | 9/20/99 | |
| WELL 3 COMMENTS: 991013 entity added: KDR CONFIDENTIAL | | | | | | | | | | | |
| | | | | | | | | | | | |
| WELL 4 COMMENTS: | | | | | | | | | | | |
| | | | | | | | | | | | |
| WELL 5 COMMENTS: | | | | | | | | | | | |

ACTION CODES (See instructions on back of form)
- A - Establish new entity for new well (single well only)
- B - Add new well to existing entity (group or unit well)
- C - Re-assign well from one existing entity to another existing entity
- D - Re-assign well from one existing entity to a new entity
- E - Other (explain in comments section)

NOTE: Use COMMENT section to explain why each Action Code was selected.

Frankie Hathaway
Signature

Administrative Assistant 9/29/99
Title Date

Phone No. (435)637-8876

FORM 9

STATE OF UTAH

DIVISION OF OIL, GAS AND MINING

CONFIDENTIAL

# SUNDRY NOTICES AND REPORTS ON WELLS

Do not use this form for proposals to drill new wells, deepen existing wells, or to reenter plugged and abandoned wells.
Use APPLICATION FOR PERMIT TO DRILL OR DEEPEN form for such proposals.

5. Lease Designation and Serial Number: ML-48178

6. If Indian, Allottee or Tribe Name: N/A

7. Unit Agreement Name: N/A

1. Type of Well: OIL ☐ GAS ☒ OTHER:

8. Well Name and Number: Utah 1-209

2. Name of Operator: River Gas Corporation

9. API Well Number: 43-007-30467

3. Address and Telephone Number: 1305 South 100 East, Price, UT 84501 (435)637-8876

10. Field or Pool, or Wildcat: Undesignated

4. Location of Well

Footages: 2271' FSL, 1251' FEl

County: CARBON

QQ, Sec., T., R., M.: NE/4 SE/4, Section 01, T15S, R08E, SLB&M

State: UTAH

11. **CHECK APPROPRIATE BOXES TO INDICATE NATURE OF NOTICE, REPORT, OR OTHER DATA**

**NOTICE OF INTENT**
**(Submit in Duplicate)**

- ☐ Abandon
- ☐ Repair Casing
- ☐ Change of Plans
- ☐ Convert to Injection
- ☐ Fracture Treat or Acidize
- ☐ Multiple Completion
- ☐ Other _____
- ☐ New Construction
- ☐ Pull or Alter Casing
- ☐ Recomplete
- ☐ Reperforate
- ☐ Vent or Flare
- ☐ Water Shut-Off

Approximate date work will start

**SUBSEQUENT REPORT**
**(Submit Original Form Only)**

- ☐ Abandon *
- ☐ Repair Casing
- ☐ Change of Plans
- ☐ Convert to Injection
- ☐ Fracture Treat or Acidize
- ☒ Other Weekly Report
- ☐ New Construction
- ☐ Pull or Alter Casing
- ☐ Reperforate
- ☐ Vent or Flare
- ☐ Water Shut-Off

Date of work completion _____

Report results of Multiple Completions and Recompletions to different reservoirs on WELL COMPLETION OR RECOMPLETION REPORT AND LOG form.

12. DESCRIBE PROPOSED OR COMPLETED OPERATIONS (Clearly state all pertinent details, and give pertinent dates. If well is directionally drilled, give subsurface locations and measured and true vertical depths for all markers and zones pertinent to this work.)

DIV. OF OIL, GAS & MINING

13.

Name & Signature: Frankie Hathaway

Title: Administrative Assistant

Date: 10/22/99

**(This space for state use only)**

(4/94)

(See Instructions on Reverse Side)

DAILY WELL REPORT

River Gas Corporation
Utah 1-209
2271' FSL, 1251' FEL
NE/4, SE/4, Sec. 1, T15S, R8E, SLB&M
CARBON COUNTY, UTAH
SURVEYED ELEVATION: 6814'
API #43-007-30467
DRILLING CONTRACTOR: Pense Bros. Rig #2

RECEIVED
OCT 25 1999
DIV. OF OIL, GAS & MINING



**DRILLING**

Day 1. 9/21/99. Current Depth: 410'. Present Operations: N/up BOP and Manifold. Total Rotating Hrs: 4. 1:00 pm-4:00 pm Move to location and R/up. 4:00 pm- 5:00 pm Service equipment, **Spud @ 5:00 pm on 9/20/99.** 5:00 pm- 6:00 pm Drill and set 5' 12-3/4 conductor pipe. 6:00 pm -9:30 pm N/up and drill 410' 11" hole. 9:30 pm-10:15 pm TOOH. 10:15 pm-11:20 pm RIH w/ 394'10" 8-5/8 casing. 11:20pm- 11:50 pm R/up Dowell and cement surface pipe close valve @ 11:50 pm 9/20/99. 11:50 pm- 12:30 pm R/D Dowell. 12:30 pm- 5:30 am WOC. 5:30 am-7:00 am N/ up BOP and manifold. [redacted].

Day 2. 9/22/99. Current Depth: 1970'. Present Operations: Condition hole. Total Rotating Hrs: 15.5. 7:00 am-8:00 am repair hydraulic line. 8:00 am-9:30 am test BOP. 9:30 am-1:00 pm Work on rig. /1:00 pm-2:00 pm TIH drill 7-7/8 hole @ 500'. 2:00 pm- 6:00 pm drill 500'-1070'. 6:00 pm-12:/00 am Drill 1070'-1970'. 12:00 am-3:00 am TOOH. 3:00 am-4:00 am RIH w/7-7/8 tricone and drill collars. 4:00 am-6:30 am Finish TIH. 6:30 am-7:00 am Condition hole. [redacted].

Day 3. 9/23/99. Current Depth: 3740' Present Operations: Drilling @ 3740. 7:00 am -9:00 am Drilling 7-7/8 hole @ 2055. 9:00 am-2:00 pm Work on rig. 2:00 pm-6:00 pm Drill 2095'-2535'. 6:00 pm-12:00 am Drill 2535'-3285'. 12:00 am-7:00 am Drill 3285'-3740'. [redacted]

Day 4. 9/24/99. Current Depth: 3750'. Present Operations: Moving off location. Total Rotating Hrs: 35. 7:00 am-7:30 am Drill 7-7/8" hole. **TD @ 3750' on 9/23/99 @ 7:30 am.** 7:30 am-8:15 am Clean hole. 8:15 am- 11:00 am Pull rods. 11:00 am-2:00 pm Mix and pump mud. 2:00 pm-4:00 pm Circulate to bottom. 4:00 pm- 6:30 pm On bottom at 4:30 pm, Circulate 2 hors. 6:30 pm-7:00 pm Short trip, on bottom @ 7:30 pm. 7:30 pm-1:00 am TOOH. 1:00 am-1:30 am RU loggers. 1:30 am-3:00 am Log hole. 3:00 am- 4:00 am RD loggers, release rig. [redacted]

Day 5. 9/25/99. Current Depth: 3750'. Present Operations: Scraper run. 8:30 am-3:30 pm Move rig to location. RU and prepare to run csg spot catwalk and piperacks. Unload csg and remove thread protectors, tally top row, pick up 5-1/2" shoe and 35 jts 5/1'2" 17# N-80 csg. Tally bottom row, pick up 51 jts 5-1/2" 17# csg. Total shoe and 86 jts land at 3732.36'. RU Dowell to cement, pump cement job, plug down @ 3:35 pm 9/24/99. [redacted]

9/26/99. Completion Report. Change over to run tbg, ND BOP, screw on tbg head, wait for catwalk and racks to be moved and tbg to arrive. Pick up 4-3/4" bit, 4-3/4" csg scraper and 120

DAILY WELL REPORT

River Gas Corporation
Utah 1-209
2271' FSL, 1251' FEL
NE/4, SE/4, Sec. 1, T15S, R8E, SLB&M
CARBON COUNTY, UTAH
SURVEYED ELEVATION: 6814'
API #43-007-30467
DRILLING CONTRACTOR: Pense Bros. Rig #2

PAGE 2

9/26/99. Completion report cont'd: jts 2-7/8" J-55 tbg. Tagged at 3730'. POOH w/tbg, scraper and bit. Change over to run csg, rack out and rig down. [redacted]

10/15/99. Rig up Halliburton, perforate and frac three zones:
Zone 1: 3486'-3496', 3470'-3478', 3457'-3459', 3450'-3452'
Zone 2: 3431'-3433', 3418'-3420', 3406'-3410', 3389'-3391', 3378'-3381'
Zone 3: 3360'-3372', 3348'-3350', 3337'-3339', 3322'-3324', 3313'-3320'
Heat water for frac: $1300.00. [redacted].

DIV. OF OIL, GAS & MINING

FORM 9

STATE OF UTAH

DIVISION OF OIL, GAS AND MINING

CONFIDENTIAL

# SUNDRY NOTICES AND REPORTS ON WELLS

Do not use this form for proposals to drill new wells, deepen existing wells, or to reenter plugged and abandoned wells. Use APPLICATION FOR PERMIT TO DRILL OR DEEPEN form for such proposals.

5. Lease Designation and Serial Number: ML-48187

6. If Indian, Allottee or Tribe Name: N/A

7. Unit Agreement Name: N/A

8. Well Name and Number: Utah 01-209

9. API Well Number: 43-007-30467

10. Field or Pool, or Wildcat: Undesignated

1. Type of Well: OIL ☐ GAS ☒ OTHER:

2. Name of Operator: River Gas Corporation

3. Address and Telephone Number: 1305 South 100 East, Price, UT 84501 (435)637-8876

4. Location of Well

Footages: 2271' FSL, 1251' FEL

QQ, Sec., T., R., M.: NE/4, SE/4, SEC.01, T14S, R08E, SLB&M

County: Carbon

State: UTAH

11. **CHECK APPROPRIATE BOXES TO INDICATE NATURE OF NOTICE, REPORT, OR OTHER DATA**

**NOTICE OF INTENT**
(Submit in Duplicate)

- ☐ Abandon
- ☐ Repair Casing
- ☐ Change of Plans
- ☐ Convert to Injection
- ☐ Fracture Treat or Acidize
- ☐ Multiple Completion
- ☐ Other
- ☐ New Construction
- ☐ Pull or Alter Casing
- ☐ Recomplete
- ☐ Reperforate
- ☐ Vent or Flare
- ☐ Water Shut-Off

Approximate date work will start

**SUBSEQUENT REPORT**
(Submit Original Form Only)

- ☐ Abandon *
- ☐ Repair Casing
- ☐ Change of Plans
- ☐ Convert to Injection
- ☐ Fracture Treat or Acidize
- ☐ Other Online Notice
- ☐ New Construction
- ☐ Pull or Alter Casing
- ☐ Reperforate
- ☐ Vent or Flare
- ☐ Water Shut-Off

Date of work completion

Report results of Multiple Completions and Recompletions to different reservoirs on WELL COMPLETION OR RECOMPLETION REPORT AND LOG form.

12. DESCRIBE PROPOSED OR COMPLETED OPERATIONS (Clearly state all pertinent details, and give pertinent dates. If well is directionally drilled, give subsurface locations and measured and true vertical depths for all markers and zones pertinent to this work.)

The Utah 01-209 was placed online and showed first production 10/22/99.

RECEIVED
NOV 22 1999
DIV. OF OIL, GAS & MINING

13.

Name & Signature: Frankie Hathaway Frankie Hathaway Title: Administrative Asst. Date: 11/18/99

(This space for state use only)

(4/94)

(See Instructions on Reverse Side)

FORM 9

STATE OF UTAH

DIVISION OF OIL, GAS AND MINING

ORIGINAL

| | |
|---|---|
| 5. Lease Designation and Serial Number: ML - 48187 | |
| 6. If Indian, Allottee or Tribe Name: N/A | |
| 7. Unit Agreement Name: UTU67921X Drunkards Wash | |
| 8. Well Name and Number: Utah 01-209 | |
| 9. API Well Number: 43-007-30467 | |
| 10. Field or Pool, or Wildcat: Drunkards Wash | |

# SUNDRY NOTICES AND REPORTS ON WELLS

Do not use this form for proposals to drill new wells, deepen existing wells, or to reenter plugged and abandoned wells.
Use APPLICATION FOR PERMIT TO DRILL OR DEEPEN form for such proposals.

1. Type of Well: OIL ☐ GAS ☒ OTHER: CONFIDENTIAL

2. Name of Operator: River Gas Corporation

3. Address and Telephone Number: 6825 South 5300 West, P.O. Box 851, Price, UT 84501 (435) 613-9777

4. Location of Well
Footages: County: 2271' FSL, 1251' FEL — Carbon County
QQ, Sec., T., R., M.: State: NE/SE SEC. 01, T15S, R08E, SLB & M — Utah

## 11. CHECK APPROPRIATE BOXES TO INDICATE NATURE OF NOTICE, REPORT, OR OTHER DATA

**NOTICE OF INTENT**
(Submit in Duplicate)

- ☐ Abandon
- ☐ Repair Casing
- ☐ Change of Plans
- ☐ Convert to Injection
- ☐ Fracture Treat or Acidize
- ☐ Multiple Completion
- ☐ Other _____
- ☐ New Construction
- ☐ Pull or Alter Csg
- ☐ Recomplete
- ☐ Reperforate
- ☐ Vent or Flare
- ☐ Water Shut-Off

Approximate date work will start _____

**SUBSEQUENT REPORT**
(Submit Original Form Only)

- ☐ Abandon *
- ☐ Repair Casing
- ☐ Change of Plans
- ☐ Convert to Injection
- ☐ Fracture Treat or Acidize
- ☒ Other Chemical/Flush Treatment
- ☐ New Construction
- ☐ Pull or Alter Csg
- ☐ Reperforate
- ☐ Vent or Flare
- ☐ Water Shut-Off

Date of work completion 04/20/2000

Report results of Multiple Completions and Recompletions to different reservoirs on WELL COMPLETION OR RECOMPLETION REPORT AND LOG form.

* Must be accompanied by a cement verification report.

12. DESCRIBE PROPOSED OR COMPLETED OPERATIONS (Clearly state all pertinent details, and give pertinent dates. If well is directionally drilled, give subsurface locations and measured and true vertical depths for all markers and zones pertinent to this work.)

Please be advised that the above referenced well was chemically treated with 4000 gallons of low Ph fluid and 250 gallons of 7 1/2% HCL on 04/20/00.

RECEIVED
JUL 03 2000
DIVISION OF
OIL, GAS AND MINING

13.

Name & Signature: Rochelle Crabtree Rochelle Crabtree Title: Administrative Assistant Date: 06/28/2000

(This space for state use only)

(4/94) (See Instructions on Reverse Side)

FORM 9

STATE OF UTAH

DIVISION OF OIL, GAS AND MINING

ORIGINAL

| | |
|---|---|
| 5. Lease Designation and Serial Number: | ML - 48187 |
| 6. If Indian, Allottee or Tribe Name: | N/A |
| 7. Unit Agreement Name: | UTU67921X Drunkards Wash |
| 8. Well Name and Number: | Utah 01-209 |
| 9. API Well Number: | 43-007-30467 |
| 10. Field or Pool, or Wildcat: | Drunkards Wash |

# SUNDRY NOTICES AND REPORTS ON WELLS

Do not use this form for proposals to drill new wells, deepen existing wells, or to reenter plugged and abandoned wells.
Use APPLICATION FOR PERMIT TO DRILL OR DEEPEN form for such proposals.

CONFIDENTIAL

1. Type of Well: OIL ☐ GAS ☒ OTHER:

2. Name of Operator: River Gas Corporation

3. Address and Telephone Number: 6825 South 5300 West, P.O. Box 851, Price, UT 84501 (435) 613-9777

4. Location of Well
Footages: County: 2271' FSL, 1251' FEL — Carbon County
QQ, Sec., T., R., M.: State: NE/SE SEC. 01, T15S, R08E, SLB & M — Utah

## 11. CHECK APPROPRIATE BOXES TO INDICATE NATURE OF NOTICE, REPORT, OR OTHER DATA

**NOTICE OF INTENT**
(Submit in Duplicate)

- ☐ Abandon
- ☐ Repair Casing
- ☐ Change of Plans
- ☐ Convert to Injection
- ☐ Fracture Treat or Acidize
- ☐ Multiple Completion
- ☐ Other
- ☐ New Construction
- ☐ Pull or Alter Csg
- ☐ Recomplete
- ☐ Reperforate
- ☐ Vent or Flare
- ☐ Water Shut-Off

Approximate date work will start

**SUBSEQUENT REPORT**
(Submit Original Form Only)

- ☐ Abandon *
- ☐ Repair Casing
- ☐ Change of Plans
- ☐ Convert to Injection
- ☐ Fracture Treat or Acidize
- ☒ Other Chemical/Flush Treatment
- ☐ New Construction
- ☐ Pull or Alter Csg
- ☐ Reperforate
- ☐ Vent or Flare
- ☐ Water Shut-Off

Date of work completion 04/20/2000

Report results of Multiple Completions and Recompletions to different reservoirs on WELL COMPLETION OR RECOMPLETION REPORT AND LOG form.

* Must be accompanied by a cement verification report.

12. DESCRIBE PROPOSED OR COMPLETED OPERATIONS (Clearly state all pertinent details, and give pertinent dates. If well is directionally drilled, give subsurface locations and measured and true vertical depths for all markers and zones pertinent to this work.)

Please be advised that the above referenced well was chemically treated with 4000 gallons of low Ph fluid and 250 gallons of 7 1/2% HCL on 04/20/00.

RECEIVED
JUL 11 2000
DIVISION OF
OIL, GAS AND MINING

13.

Name & Signature: Rochelle Crabtree Rochelle Crabtree Title: Administrative Assistant Date: 06/28/2000

(This space for state use only)

Accepted by the
Utah Division of
Oil, Gas and Mining

FOR RECORD ONLY

WTC

(4/94) (See Instructions on Reverse Side)

STATE OF UTAH
DIVISION OF OIL, GAS AND MINING

ENTITY ACTION FORM - FORM 6

OPERATOR River Gas Corporation
ADDRESS 6825 S. 5300 W. P.O. Box 851
Price, UT 84501

OPERATOR ACCT. NO._____

| ACTION CODE | CURRENT ENTITY NO. | NEW ENTITY NO. | API NUMBER | WELL NAME | WELL LOCATION QQ | SC | TP | RG | COUNTY | SPUD DATE | EFFECTIVE DATE |
|---|---|---|---|---|---|---|---|---|---|---|---|
| C | 12582 | 11256 | 43-007-30500 | USA 11-292 | SWNW | 11 | 14S | 09E | Carbon | 8/7/1999 | 7/1/1999 |
| WELL 1 COMMENTS: Drunkard's Wash Unit; 7th Revision effective 7/1/1999. Entity added 000313 Jim 2. CONFIDENTIAL | | | | | | | | | | | |
| C | 12577 | 11256 | 43-007-30622 | USA 17-180A | SENW | 17 | 14S | 09E | Carbon | 10/7/1999 | 7/1/1999 |
| WELL 2 COMMENTS: Drunkard's Wash Unit; 7th Revision effective 7/1/1999. Entity added 000313 - Jim 2. CONFIDENTIAL | | | | | | | | | | | |
| C | 12602 | 11256 | 43-007-30464 | Utah 1-208 | NWNE | 01 | 15S | 08E | Carbon | 5/28/1999 | 7/1/1999 |
| WELL 3 COMMENTS: Drunkard's Wash Unit; 7th Revision effective 7/1/1999. Entity added 000313 - Jim 2 CONFIDENTIAL | | | | | | | | | | | |
| C | | 11256 | 43-007-30465 | Utah 01-247 | SWSW | 01 | 15S | 08E | Carbon | 6/27/1999 | 7/1/1999 |
| WELL 4 COMMENTS: Drunkard's Wash Unit; 7th Revision effective 7/1/1999. Entity added 000313 CONFIDENTIAL | | | | | | | | | | | |
| C | 12573 | 11256 | 43-007-30467 | Utah 01-209 | ~~NESW~~ NE SE | 01 | 15S | 08E | Carbon | 9/20/1999 | 7/1/1999 |
| WELL 5 COMMENTS: Drunkard's Wash Unit; 7th Revision effective 7/1/1999. Entity added 000313 - Jim 2. CONFIDENTIAL | | | | | | | | | | | |

ACTION CODES (See instructions on back of form)
- A - Establish new entity for new well (single well only)
- B - Add new well to existing entity (group or unit well)
- C - Re-assign well from one existing entity to another existing entity
- D - Re-assign well from one existing entity to a new entity
- E - Other (explain in comments section)

NOTE: Use COMMENT section to explain why each Action Code was selected.

Frankie Hathaway
Signature

Administrative Assistant 3/6/2000
Title Date

Phone No. (435)613-9777

FORM 8

STATE OF UTAH
DIVISION OF OIL, GAS AND MINING

RECEIVED NOV 22 1999 DIV. OF OIL, GAS & MINING

CONFIDENTIAL

# WELL COMPLETION OR RECOMPLETION REPORT AND LOG

1a. TYPE OF WELL: OIL WELL ☐ GAS WELL ☒ DRY ☐ Other

b. TYPE OF COMPLETION: NEW WELL ☒ WORK OVER ☐ DEEP-EN ☐ PLUG BACK ☐ DIFF. RESVR. ☐ Other

CONFIDENTIAL PERIOD EXPIRED ON 11-14-00

5. LEASE DESIGNATION AND SERIAL NO.: ML-48187

6. IF INDIAN, ALLOTTEE OR TRIBE NAME: N/A

7. UNIT AGREEMENT NAME: N/A

8. FARM OR LEASE NAME: Utah

9. WELL NO.: 01-209

10. FIELD AND POOL, OR WILDCAT: Undesignated

2. NAME OF OPERATOR: RIVER GAS CORPORATION

3. ADDRESS OF OPERATOR: 1305 South 100 East, Price, UT 84501 (435) 637-8876

4. LOCATION OF WELL (Report location clearly and in accordance with any State requirements)

At surface: 2271' FSL, 1251' FEL

At top prod. interval reported below

11. SEC., T., R., M., OR BLOCK AND SURVEY OR AREA: NE/4 SE/4, Sec 01, T15S, R08E, SLB&M

14. API NO.: 43-007-30467 | DATE ISSUED: 4/20/99

12. COUNTY: Carbon | 13. STATE: Utah

15. DATE SPUDDED: 9/20/99 | 16. DATE T.D. REACHED: 9/23/99 | 17. DATE COMPL. (Ready to prod.) or (Plug & Abd.): 10/14/99 | 18. ELEVATIONS (DF, REB, RT, GR, ETC.): GR 6814' | 19. ELEV. CASINGHEAD: N/A

20. TOTAL DEPTH, MD & TVD: 3750' | 21. PLUG BACK T.D., MD & TVD: 3732' | 22. IF MULTIPLE COMPL., HOW MANY: N/A | 23. INTERVALS DRILLED BY → ROTARY TOOLS: to TD | CABLE TOOLS: N/A

24. PRODUCING INTERVAL(S), OF THIS COMPLETION--TOP, BOTTOM, NAME (MD OR TVD): Ferron Coal - Top Coal 3360' & Bottom Coal 3486'

25. WAS DIRECTIONAL SURVEY MADE: -----

26. TYPE ELECTRIC AND OTHER LOGS RUN: CBL 9-27-99; Dual Induction, Laterolog, SFF, GR, Caliper, Comp Density, & Neutron

27. WAS WELL CORED YES ☐ NO ☒ (Submit analysis)
DRILL STEM TEST YES ☐ NO ☒ (See reverse side)

28. CASING RECORD (Report all strings set in well)

| CASING SIZE | WEIGHT, LB./FT. | DEPTH SET (MD) | HOLE SIZE | CEMENT RECORD | AMOUNT PULLED |
|---|---|---|---|---|---|
| 12 3/4" | Conductor | 5' | 15" | | |
| 8 5/8" | 24# | 394' | 11" | 150 sxs Class G, 2% S1+1/4#per sack D29 | |
| 5 1/2" | 17# | 3732' | 7 7/8" | 350 sxs 50/50 POZ8%D20,10%D44,1/4#/skD29 | |
| | | | | 80 sks tail 10-1 RFC | |

29. LINER RECORD

| SIZE | TOP (MD) | BOTTOM (MD) | SACKS CEMENT | SCREEN (MD) |
|---|---|---|---|---|
| | | | | |
| | | | | |

30. TUBING RECORD

| SIZE | DEPTH SET (MD) | PACKER SET (MD) |
|---|---|---|
| 2-7/8" | 3730' | N/A |
| | | |

31. PERFORATION RECORD (Interval, size and number)

Upper: 3360'-3372', 3348'-3350', 3337'-3339', 3322'-3324', 3313'-3320' 4spf .88"
Middle:3431'-3433', 3418'-3420', 3406'-3410', 3389'-3391' 4spf .88"
Lower: 3486'-3496', 3470'-3478', 3457'-3459', 3450'-3452' 4spf .88"

32. ACID, SHOT, FRACTURE, CEMENT SQUEEZE, ETC.

| DEPTH INTERVAL (MD) | AMOUNT AND KIND OF MATERIAL USED |
|---|---|
| Upper 3360'-3320' | 80,000#, 16/30; 22,312 gal fluid |
| Middle 3431'-3391' | 55,000#, 16/30; 39,381 gal fluid |
| Lower 3486'-3452' | 104,000#, 16/30; 40,803 gal fluid |

33. PRODUCTION

DATE FIRST PRODUCTION: 10/22/99 | PRODUCTION METHOD (Flowing, gas lift, pumping---size and type of pump): Pumping - 2 1/2" x 2" x 16' RWAC | WELL STATUS (Producing or shut-in): Producing

| DATE OF TEST | HOURS TESTED | CHOKE SIZE | PROD'N. FOR TEST PERIOD → | OIL---BBL. | GAS---MCF. | WATER---BBL. | GAS-OIL RATIO |
|---|---|---|---|---|---|---|---|
| 10/22/99 | 24hrs. | -------- | | N/A | 257 | 303 | |

| FLOW. TUBING PRESS. | CASING PRESSURE | CALCULATED 24-HOUR RATE → | OIL---BBL. | GAS---MCF. | WATER---BBL. | OIL GRAVITI - API (CORR.) |
|---|---|---|---|---|---|---|
| 21 | 18 | | N/A | 257 | 303 | N/A |

34. DISPOSITION OF GAS (Sold, used for fuel, vented, etc.): SOLD

TEST WITNESSED BY: Jerry H. Dietz

35. LIST OF ATTACHMENTS

36 I hereby certify that the foregoing and attached information is complete and correct as determined from all available records

SIGNED Jean Semborski TITLE Permit Specialist DATE November 16, 1999

See Spaces for Additional Data on Reverse Side

FORMATION TOPS PER TELECON 11/15/00 WITH FRANKIE HATHAWAY:

COAL INTERVAL - 3315-3490

FRSD - 3308
BETONITE - 3140

TUNUNK - 3624

FORM 9

STATE OF UTAH

DIVISION OF OIL, GAS AND MINING

# SUNDRY NOTICES AND REPORTS ON WELLS

Do not use this form for proposals to drill new wells, deepen existing wells, or to reenter plugged and abandoned wells
Use APPLICATION FOR PERMIT TO DRILL OR DEEPEN form for such proposals

5 Lease Designation and Serial Number:

6 If Indian, Allottee or Tribe Name:

7 Unit Agreement Name:

8 Well Name and Number:

9 API Well Number:

10 Field or Pool, or Wildcat:

1 Type of Well: OIL ☐ GAS ☒ OTHER:

2 Name of Operator: River Gas Corporation

3 Address and Telephone Number: 6825 S. 5300 W. P.O. Box 851 Price, Utah 84501 (435) 613-9777

4 Location of Well
Footages:
QQ, Sec., T., R., M.: SLB & M

County: Carbon County
State: Utah

11 **CHECK APPROPRIATE BOXES TO INDICATE NATURE OF NOTICE, REPORT, OR OTHER DATA**

**NOTICE OF INTENT**
(Submit in Duplicate)

- ☐ Abandon
- ☐ Repair Casing
- ☐ Change of Plans
- ☐ Convert to Injection
- ☐ Fracture Treat or Acidize
- ☐ Multiple Completion
- ☐ New Construction
- ☐ Pull or Alter Casing
- ☐ Recomplete
- ☐ Reperforate
- ☐ Vent or Flare
- ☐ Water Shut-Off
- ☒ Other Change of Operator

Approximate date work will start _____

**SUBSEQUENT REPORT**
(Submit Original Form Only)

- ☐ Abandon *
- ☐ Repair Casing
- ☐ Change of Plans
- ☐ Convert to Injection
- ☐ Fracture Treat or Acidize
- ☐ Other _____
- ☐ New Construction
- ☐ Pull or Alter Casing
- ☐ Reperforate
- ☐ Vent or Flare
- ☐ Water Shut-Off

Date of work completion _____

Report results of Multiple Completions and Recompletions to different reservoirs on WELL COMPLETION OR RECOMPLETION REPORT AND LOG form

* Must be accompanied by a cement verification report

12 DESCRIBE PROPOSED OR COMPLETED OPERATIONS (Clearly state all pertinent details, and give pertinent dates If well is directionally drilled, give subsurface locations and measured and true vertical depths for all markers and zones pertinent to this work )

Please be advised that River Gas Corporation is transferring ownership of the attached list of wells to Phillips Petroleum Company 9780 Mt. Pyramid Court, Englewood, CO 80112.
Please direct all correspondence and reports to: Phillips Petroleum Company P.O. Box 3368, Englewood, CO 80155-3368.
Effective 1/1/01

13

Name & Signature: Cal Hurtt *Cal Hurtt* Title: Development Manager Date: 12/19/00

(This space for state use only)

(4/94) (See Instructions on Reverse Side)

# Drunkards Wash Total Well Count

(Through 2000 Drilling Season)

| Well # | API # | Location | Section | Tship | Range |
|---|---|---|---|---|---|
| Utah 25-09-01 | 4300730130 | 1683 FSL, 877 FEL | 25 | 14S | 09E |
| Utah 36-01-02 | 4300730178 | 600 FNL, 620 FEL | 36 | 14S | 09E |
| Utah 31-03-03 | 4300730143 | 740 FNL, 1780 FWL | 31 | 14S | 10E |
| Utah 36-03-04 | 4300730142 | 822 FNL, 2176 FWL | 36 | 14S | 09E |
| Utah 36-09-05 | 4300730144 | 2050 FSL, 700 FEL | 36 | 14S | 09E |
| Utah 25-07-06 | 4300730156 | 2599 FNL, 1902 FEL | 25 | 14S | 09E |
| Utah 25-11-07 | 4300730157 | 1718 FSL, 2210 FWL | 25 | 14S | 09E |
| Utah 26-16-08 | 4300730181 | 800 FSL, 750 FEL | 26 | 14S | 09E |
| Utah 35-01-09 | 4300730180 | 650 FNL, 850 FEL | 35 | 14S | 09E |
| Utah 31-12-10 | 4300730183 | 1995 FSL, 745 FWL | 31 | 14S | 10E |
| Utah 36-11-11 | 4300730184 | 1837 FSL, 1903 FWL | 36 | 14S | 09E |
| Utah 19-14-12 | 4300730182 | 860 FSL, 1780 FWL | 19 | 14S | 10E |
| Utah 30-05-13 | 4300730179 | 1493 FNL, 728 FWL | 30 | 14S | 10E |
| Utah 30-13-14 | 4300730185 | 612 FSL, 670 FWL | 30 | 14S | 10E |
| Utah 24-01-15 | 4300730191 | 1320 FNL, 1320 FEL | 24 | 14S | 09E |
| Utah 24-03-16 | 4300730187 | 1310 FNL, 1525 FWL | 24 | 14S | 09E |
| Utah 24-12-17 | 4300730208 | 1320 FSL, 1320 FWL | 24 | 14S | 09E |
| Utah 24-16-18 | 4300730192 | 482 FSL, 940 FEL | 24 | 14S | 09E |
| Utah 23-02-19 | 4300730207 | 963 FNL, 1470 FEL | 23 | 14S | 09E |
| Utah 23-04-20 | 4300730194 | 1291 FNL, 1257 FWL | 23 | 14S | 09E |
| Utah 23-14-21 | 4300730200 | 739 FSL, 1716 FWL | 23 | 14S | 09E |
| Utah 23-09-22 | 4300730201 | 1320 FSL, 1320 FEL | 23 | 14S | 09E |
| Utah 26-01-23 | 4300730205 | 1320 FNL, 1320 FEL | 26 | 14S | 09E |
| Utah 26-06-24 | 4300730202 | 1480 FNL, 2000 FWL | 26 | 14S | 09E |
| Utah 26-11-25 | 4300730204 | 1500 FSL, 1500 FWL | 26 | 14S | 09E |
| Utah 35-03-26 | 4300730203 | 1085 FNL, 1805 FWL | 35 | 14S | 09E |
| Utah 35-10-27 | 4300730197 | 2567 FSL, 2151 FEL | 35 | 14S | 09E |
| Utah 35-13-28 | 4300730198 | 1236 FSL, 1152 FWL | 35 | 14S | 09E |
| Utah 27-08-29 | 4300730193 | 2134 FNL, 753 FEL | 27 | 14S | 09E |
| Utah 27-09-30 | 4300730186 | 1359 FSL, 707 FEL | 27 | 14S | 09E |
| Utah 34-01-31 | 4300730196 | 464 FNL, 540 FEL | 34 | 14S | 09E |
| Utah 34-09-32 | 4300730195 | 1938 FSL, 435 FEL | 34 | 14S | 09E |
| Utah 25-04-33 | 4300730206 | 920 FNL, 780 FWL | 25 | 14S | 09E |
| Prettyman 10-15-34 | 4300730211 | 842 FSL, 1419 FEL | 10 | 14S | 09E |
| Utah 10-36 | 4300730302 | 1213 FNL, 469 FEL | 10 | 15S | 09E |
| Utah 12-15-37 | 4300730210 | 1158 FSL, 1494 FEL | 12 | 15S | 09E |
| Utah 06-38 | 4300730217 | 899 FNL, 1730 FEL | 6 | 15S | 10E |
| Utah 06-39 | 4300730218 | 934 FNL, 819 FWL | 6 | 15S | 10E |
| Utah 06-40 | 4300730219 | 2180 FSL, 1780 FEL | 6 | 15S | 10E |
| Utah 06-41 | 4300730254 | 2124 FSL, 1054 FWL | 6 | 15S | 10E |
| Utah 01-42 | 4300730220 | 860 FNL, 1780 FEL | 1 | 15S | 09E |
| Utah 01-43 | 4300730221 | 808 FNL, 1451 FWL | 1 | 15S | 09E |
| Utah 01-44 | 4300730222 | 860 FSL, 1320 FWL | 1 | 15S | 09E |
| Utah 01-45 | 4300730223 | 1219 FSL, 1318 FEL | 1 | 15S | 09E |
| Utah 02-46 | 4300730224 | 860 FNL, 860 FEL | 2 | 15S | 09E |

| | | | | | |
|---|---|---|---|---|---|
| Utah 02-47 | 4300730225 | 1318 FNL, 1791 FWL | 2 | 15S | 09E |
| Utah 02-48 | 4300730226 | 1780 FSL, 860 FEL | 2 | 15S | 09E |
| Utah 02-49 | 4300730227 | 1320 FSL, 2080 FWL | 2 | 15S | 09E |
| Utah 11-50 | 4300730228 | 860 FNL, 860 FEL | 11 | 15S | 09E |
| Utah 11-51 | 4300730229 | 1000 FNL, 1900 FWL | 11 | 15S | 09E |
| Utah 11-52 | 4300730230 | 1400 FSL, 1100 FEL | 11 | 15S | 09E |
| Utah 11-53 | 4300730231 | 1780 FSL, 1800 FWL | 11 | 15S | 09E |
| Utah 12-54 | 4300730232 | 875 FNL, 1015 FWL | 12 | 15S | 09E |
| Utah 12-55 | 4300730233 | 1500 FNL, 1320 FEL | 12 | 15S | 09E |
| Utah 12-56 | 4300730234 | 1500 FSL, 1320 FWL | 12 | 15S | 09E |
| Utah 07-57 | 4300730235 | 1421 FNL, 1003 FWL | 7 | 15S | 10E |
| Utah 07-58 | 4300730236 | 1495 FNL, 2006 FEL | 7 | 15S | 10E |
| Utah 07-59 | 4300730237 | 1400 FSL, 2100 FEL | 7 | 15S | 10E |
| Utah 07-60 | 4300730238 | 954 FSL, 1256 FWL | 7 | 15S | 10E |
| Utah 14-61 | 4300730239 | 1386 FNL, 931 FEL | 14 | 15S | 09E |
| Utah 14-62 | 4300730240 | 980 FNL, 1385 FWL | 14 | 15S | 09E |
| Utah 14-63 | 4300730241 | 1780 FSL, 1320 FEL | 14 | 15S | 09E |
| Utah 14-64 | 4300730242 | 907 FSL, 1392 FWL | 14 | 15S | 09E |
| Utah 13-65 | 4300730243 | 1320 FNL, 1200 FEL | 13 | 15S | 09E |
| Utah 13-66 | 4300730244 | 1276 FNL, 1301 FWL | 13 | 15S | 09E |
| Utah 13-67 | 4300730245 | 1800 FSL, 1500 FEL | 13 | 15S | 09E |
| Utah 13-68 | 4300730246 | 1320 FSL, 1320 FWL | 13 | 15S | 09E |
| Utah 18-69 | 4300730427 | 1320 FNL, 1320 FWL | 18 | 15S | 10E |
| Utah 18-70 | 4300730248 | 1110 FNL, 2127 FEL | 18 | 15S | 10E |
| Utah 18-71 | 4300730249 | 1764 FSL, 1767 FEL | 18 | 15S | 10E |
| Utah 18-72 | 4300730250 | 2100 FSL, 1100 FWL | 18 | 15S | 10E |
| USA 19-73 | 4300730392 | 1664 FNL, 1412 FEL | 19 | 15S | 10E |
| Utah 14-74 | 4300730529 | 1365 FSL, 1988 FEL | 14 | 14S | 09E |
| Utah 14-75 | 4300730263 | 1036 FSL, 1622 FWL | 14 | 14S | 09E |
| Utah 22-76 | 4300730251 | 1320 FNL, 660 FEL | 22 | 14S | 09E |
| Utah 19-77 | 4300730252 | 1780 FSL, 660 FWL | 19 | 14S | 10E |
| Williams 30-78 | 4300730279 | 460 FNL, 660 FEL | 30 | 14S | 10E |
| Utah 31-79 | 4300730253 | 1780 FSL, 1780 FEL | 31 | 14S | 10E |
| Utah 24-80 | 4300730255 | 590 FNL, 1612 FWL | 24 | 15S | 09E |
| Utah 24-81 | 4300730256 | 1067 FNL, 1361 FEL | 24 | 15S | 09E |
| Utah 32-82 | 4300730257 | 600 FNL, 2028 FEL | 32 | 15S | 09E |
| Utah 21-83 | 4300730259 | 1780 FNL, 460 FWL | 21 | 15S | 10E |
| H&A 07-84 | 4300730258 | 1780 FSL, 1780 FWL | 7 | 15S | 09E |
| Utah 27-85 | 4300730261 | 2173 FNL, 676 FWL | 27 | 14S | 08E |
| Utah 24-86 | 4300730267 | 1788 FSL, 1677 FEL | 24 | 15S | 09E |
| Utah 24-87 | 4300730375 | 1780 FSL, 1333 FWL | 24 | 15S | 09E |
| USA 15-88 | 4300730264 | 872 FSL, 875 FEL | 15 | 14S | 09E |
| Telonis 22-89 | 4300730266 | 836 FNL, 1766 FWL | 22 | 14S | 09E |
| Telonis 21-90 | 4300730328 | 1272 FNL, 1188 FEL | 21 | 14S | 09E |
| USA 13-91 | 4300730568 | 1443 FSL, 1017 FWL | 13 | 14S | 09E |
| Utah 13-92 | 4300730439 | 624 FSL, 899 FEL | 13 | 14S | 09E |
| Utah 18-93 | 4300730587 | 556 FSL, 673 FWL | 18 | 14S | 10E |
| Utah 05-95 | 4300730269 | 640 FNL, 580 FWL | 5 | 15S | 10E |
| Utah 05-94 | 4300730270 | 1520 FSL, 1320 FWL | 5 | 15S | 10E |

| | | | | | |
|---|---|---|---|---|---|
| Utah 05-96 | 4300730271 | 1780 FSL, 2180 FEL | 5 | 15S | 10E |
| Utah 08-97 | 4300730272 | 1495 FNL, 1273 FEL | 8 | 15S | 10E |
| Utah 08-98X | 4300730285 | 1341 FNL, 1319 FWL | 8 | 15S | 10E |
| Utah 08-99 | 4300730274 | 1500 FSL, 1120 FWL | 8 | 15S | 10E |
| Utah 08-100 | 4300730275 | 1500 FSL, 1400 FEL | 8 | 15S | 10E |
| Utah 17-101 | 4300730416 | 460 FNL, 2180 FEL | 17 | 15S | 10E |
| Utah 17-102 | 4300730277 | 810 FNL, 910 FWL | 17 | 15S | 10E |
| Utah 17-103 | 4300730278 | 1520 FSL, 1120 FWL | 17 | 15S | 10E |
| Powell 19-104 | 4300730282 | 1327 FNL, 1458 FWL | 19 | 15S | 10E |
| Powell 19-105 | 4300730283 | 1239 FSL, 1325 FWL | 19 | 15S | 10E |
| Utah 23-106 | 4300730280 | 150 FNL, 1400 FEL | 23 | 15S | 09E |
| Utah 23-107 | 4300730281 | 1252 FNL, 1255 FWL | 23 | 15S | 09E |
| Birkinshaw 19-108 | 4300730284 | 1305 FNL, 1192 FEL | 19 | 15S | 09E |
| Utah 36-109 | 4300730268 | 1800 FNL, 1800 FWL | 36 | 15S | 09E |
| Utah 16-110 | 4301530250 | 860 FSL, 2000 FWL | 16 | 16S | 09E |
| Fausett 09-111 | 4300730428 | 2215 FSL, 354 FEL | 9 | 14S | 09E |
| Fausett 10-112 | 4300730415 | 1590 FSL, 1342 FWL | 10 | 14S | 09E |
| Giacoletto 11-113 | 4300730335 | 500 FSL, 2070 FWL | 11 | 14S | 09E |
| Prettyman 11-114 | 4300730340 | 471 FSL, 1828 FEL | 11 | 14S | 09E |
| Giacoletto 13-120 | 4300730407 | 1200 FNL, 1219 FWL | 13 | 14S | 09E |
| Giacoletto 14-121 | 4300730345 | 1200 FNL, 1060 FEL | 14 | 14S | 09E |
| USA 14-122 | 4300730404 | 1500 FNL, 1039 FWL | 14 | 14S | 09E |
| Utah 30-125 | 4300730262 | 630 FSL, 1627 FEL | 30 | 14S | 10E |
| Utah 31-126 | 4300730305 | 1954 FNL, 1291 FEL | 31 | 14S | 10E |
| Robertson 32-127 | 4300730374 | 646 FNL, 349 FWL | 32 | 14S | 10E |
| Utah 04-129 | 4300730309 | 700 FWL, 1850 FSL | 4 | 15S | 10E |
| Utah 04-130 | 4300730519 | 860 FSL, 2150 FEL | 4 | 15S | 10E |
| Sampinos 16-131 | 4300730610 | 1201 FNL, 1016 FWL | 16 | 15S | 10E |
| Jensen 16-132 | 4300730588 | 1206 FSL, 1240 FWL | 16 | 15S | 10E |
| LDS 17-133 | 4300730296 | 1500 FSL, 1700 FEL | 17 | 15S | 10E |
| Utah 25-134 | 4300730399 | 745 FNL, 1482 FWL | 25 | 15S | 09E |
| Utah 36-135 | 4300730341 | 850 FNL, 850 FEL | 36 | 15S | 09E |
| Utah 36-136 | 4300730343 | 465 FSL, 660 FWL | 36 | 15S | 09E |
| Utah 36-137 | 4300730342 | 2180 FSL, 1800 FEL | 36 | 15S | 09E |
| Utah 02-138 | 4301530288 | 638 FNL, 1865 FEL | 2 | 16S | 09E |
| Utah 02-139 | 4301530289 | 1890 FNL, 850 FWL | 2 | 16S | 09E |
| Utah 02-140 | 4301530290 | 850 FSL, 1800 FWL | 2 | 16S | 09E |
| Utah 02-141 | 4301530291 | 1800 FSL, 1950 FEL | 2 | 16S | 09E |
| Telonis 15-142 | 4300730319 | 1320 FSL, 860 FWL | 15 | 14S | 09E |
| Fausett 16-143 | 4300730320 | 1320 FNL, 1320 FEL | 16 | 14S | 09E |
| Fausett 16-144 | 4300730321 | 1800 FNL, 860 FWL | 16 | 14S | 09E |
| Telonis 16-145 | 4300730322 | 1320 FSL, 1320 FWL | 16 | 14S | 09E |
| Paar 16-146 | 4300730323 | 843 FSL, 2157 FEL | 16 | 14S | 09E |
| Christiansen 17-147 | 4300730324 | 860 FSL, 1800 FWL | 17 | 14S | 09E |
| Christiansen 17-148 | 4300730325 | 1250 FSL, 1100 FEL | 17 | 14S | 09E |
| Birkinshaw 18-149 | 4300730326 | 500 FSL, 500 FEL | 18 | 14S | 09E |
| Telonis 19-150 | 4300730300 | 751 FNL, 1840 FWL | 19 | 14S | 09E |
| Telonis 19-151 | 4300730299 | 860 FSL, 2000 FWL | 19 | 14S | 09E |
| Telonis 20-152 | 4300730327 | 1320 FNL, 1900 FEL | 20 | 14S | 09E |

| | | | | | |
|---|---|---|---|---|---|
| Telonis 21-153 | 4300730329 | 860 FNL, 1800 FWL | 21 | 14S | 09E |
| Telonis 29-154 | 4300730330 | 800 FNL, 1500 FWL | 29 | 14S | 09E |
| Telonis 29-155 | 4300730331 | 1800 FSL, 1250 FWL | 29 | 14S | 09E |
| Telonis 30-156 | 4300730301 | 910 FNL, 868 FEL | 30 | 14S | 09E |
| Telonis 30-157 | 4300730332 | 1800 FSL, 580 FEL | 30 | 14S | 09E |
| Utah 32-158 | 4300730333 | 1038 FNL, 1768 FEL | 32 | 14S | 09E |
| Utah 32-159 | 4300730334 | 2011 FNL, 1426 FWL | 32 | 14S | 09E |
| Utah 32-160 | 4300730398 | 1500 FSL, 1780 FWL | 32 | 14S | 09E |
| Utah 32-161 | 4300730336 | 415 FSL, 1408 FEL | 32 | 14S | 09E |
| Utah 36-162 | 4300730315 | 2053 FNL, 685 FEL | 36 | 14S | 08E |
| Utah 36-163 | 4300730316 | 860 FNL, 2100 FWL | 36 | 14S | 08E |
| Utah 36-164 | 4300730317 | 1070 FSL, 2000 FWL | 36 | 14S | 08E |
| Utah 36-165 | 4300730318 | 1100 FSL, 1500 FEL | 36 | 14S | 08E |
| Utah 02-166 | 4300730337 | 1219 FNL, 1738 FEL | 2 | 15S | 08E |
| Utah 02-167 | 4300730338 | 660 FNL, 2075 FWL | 2 | 15S | 08E |
| Utah 02-168 | 4300730339 | 1800 FSL, 2100 FWL | 2 | 15S | 08E |
| Utah 02-169 | 4300730308 | 754 FSL, 1000 FEL | 2 | 15S | 08E |
| Seamons 32-170 | 4300730291 | 700 FNL, 500 FWL | 32 | 13S | 09E |
| Pinnacle Peak 19-171 | 4300730117 | 1320 FSL, 1320 FEL | 19 | 14S | 09E |
| Telonis 20-172 | 4300730107 | 1980 FSL, 660 FEL | 20 | 14S | 09E |
| Powell 30-173 | 4300730346 | 1200 FNL, 1200 FWL | 30 | 15S | 10E |
| Stella-Hamaker 10-174 | 4300730116 | 852 FNL, 1971 FWL | 10 | 15S | 08E |
| Utah 31-175 | 4301530317 | 897 FNL, 1731 FWL | 31 | 16S | 09E |
| USA 15-176 | 4300730450 | 2588 FNL, 1155 FEL | 15 | 14S | 09E |
| USA 09-178 | 4300730419 | 428 FSL, 2527 FWL | 9 | 14S | 09E |
| USA 17-180A | 4300730622 | 2563 FNL, 1383 FWL | 17 | 14S | 09E |
| USA 18-182 | 4300730417 | 1068 FSL, 1972 FWL | 18 | 14S | 09E |
| USA 24-183 | 4300730469 | 828 FNL, 624 FEL | 24 | 14S | 08E |
| Utah 27-187 | 4300730395 | 1400 FNL, 1400 FWL | 27 | 14S | 09E |
| Utah 27-188 | 4300730292 | 477 FSL, 518 FWL | 27 | 14S | 09E |
| Utah 28-189 | 4300730396 | 1707 FNL, 868 FEL | 28 | 14S | 09E |
| Utah 28-190 | 4300730397 | 1969 FNL, 1324 FWL | 28 | 14S | 09E |
| Utah 28-191 | 4300730293 | 693 FSL, 1623 FWL | 28 | 14S | 09E |
| Utah 28-192 | 4300730294 | 1407 FNL, 1940 FWL | 28 | 14S | 09E |
| Utah 29-193 | 4300730405 | 693 FNL, 1029 FEL | 29 | 14S | 09E |
| Utah 29-194 | 4300730427 | 951 FSL, 370 FEL | 29 | 14S | 09E |
| Utah 30-195 | 4300730265 | 1407 FNL, 1940 FWL | 30 | 14S | 09E |
| Utah 30-196 | 4300730344 | 1056 FSL, 1984 FWL | 30 | 14S | 09E |
| Kakatsidas 31-197 | 4300730420 | 619 FNL, 1361 FEL | 31 | 14S | 09E |
| Utah 31-198 | 4300730406 | 1403 FNL, 1540 FWL | 31 | 14S | 09E |
| Utah 31-199 | 4300730480 | 1125 FSL, 928 FWL | 31 | 14S | 09E |
| Utah 31-200 | 4300730385 | 2118 FSL, 549 FEL | 31 | 14S | 09E |
| Utah 33-201 | 4300730386 | 317 FNL, 1815 FEL | 33 | 14S | 09E |
| Utah 33-202 | 4300730387 | 1939 FNL, 1593 FWL | 33 | 14S | 09E |
| Utah 33-203 | 4300730388 | 1373 FSL, 1140 FWL | 33 | 14S | 09E |
| Utah 33-204 | 4300730389 | 2024 FSL, 1525 FEL | 33 | 14S | 09E |
| Utah 05-205 | 4300730384 | 1485 FNL, 760 FEL | 5 | 15S | 09E |
| Utah 05-206 | 4300730390 | 1300 FNL, 1352 FWL | 5 | 15S | 09E |
| Utah 06-207 | 4300730391 | 825 FNL, 928 FEL | 6 | 15S | 08E |

| | | | | | |
|---|---|---|---|---|---|
| Utah 01-208 | 4300730464 | 1246 FNL, 1831 FEL | 1 | 15S | 09E |
| Utah 01-209 | 4300730467 | 2271 FSL, 1251 FEL | 1 | 15S | 09E |
| Utah 34-211 | 4300730114 | 1181 FSL, 1005 FWL | 34 | 14S | 09E |
| Utah 03-212 | 4300730468 | 1187 FNL, 1761 FEL | 3 | 15S | 09E |
| Utah 03-213 | 4300730381 | 1466 FNL, 2041 FWL | 3 | 15S | 09E |
| Utah 03-214 | 4300730295 | 813 FSL, 966 FWL | 3 | 15S | 09E |
| Utah 03-215 | 4300730297 | 988 FSL, 604 FEL | 3 | 15S | 09E |
| Utah 04-216 | 4300730382 | 1610 FNL, 810 FEL | 4 | 15S | 09E |
| Utah 04-217 | 4300730383 | 1343 FNL, 1119 FWL | 4 | 15S | 09E |
| Utah 04-218 | 4300730418 | 1084 FSL, 509 FEL | 4 | 15S | 09E |
| Utah 10-219 | 4300730298 | 805 FNL, 756 FWL | 10 | 15S | 09E |
| Utah 10-220 | 4300730432 | 474 FSL, 372 FWL | 10 | 15S | 09E |
| Utah 10-221 | 4300730303 | 1602 FSL, 2032 FEL | 10 | 15S | 09E |
| USA 19-222 | 4300730393 | 1574 FSL, 1647 FEL | 19 | 15S | 10E |
| Utah 06-223 | 4300730430 | 1636 FSL, 1085 FEL | 6 | 15S | 09E |
| Utah 05-225 | 4300730440 | 421 FSL, 498 FEL | 5 | 15S | 09E |
| Utah 04-226 | 4300730408 | 571 FSL, 2331 FWL | 4 | 15S | 09E |
| Utah 09-227 | 4300730449 | 652 FNL, 1331 FEL | 9 | 15S | 09E |
| Utah 09-228 | 4300730413 | 1444 FNL, 1520 FWL | 9 | 15S | 09E |
| Utah 09-229 | 4300730414 | 1595 FSL, 2051 FWL | 9 | 15S | 09E |
| Utah 08-230 | 4300730410 | 2003 FNL, 960 FEL | 8 | 15S | 09E |
| Utah 08-231 | 4300730411 | 1321 FNL, 1738 FWL | 8 | 15S | 09E |
| H&A 08-232 | 4300730412 | 1135 FSL, 1497 FWL | 8 | 15S | 09E |
| Utah 08-233 | 4300730488 | 468 FSL, 2030 FEL | 8 | 15S | 09E |
| Utah 07-234 | 4300730409 | 1876 FNL, 875 FEL | 7 | 15S | 09E |
| Utah 07-235 | 4300730421 | 2098 FSL, 510 FEL | 7 | 15S | 09E |
| H&A 18-236 | 4300730459 | 896 FNL, 1511 FEL | 18 | 15S | 09E |
| Utah 18-237 | 4300730485 | 1867 FSL, 1920 FEL | 18 | 15S | 09E |
| Utah 17-238 | 4300730510 | 677 FNL, 1321 FEL | 17 | 15S | 09E |
| Utah 17-239 | 4300730511 | 1383 FNL, 1576 FWL | 17 | 15S | 09E |
| Utah 17-240 | 4300730512 | 1977 FSL, 1394 FWL | 17 | 15S | 09E |
| Utah 17-241 | 4300730513 | 1668 FSL, 2222 FEL | 17 | 15S | 08E |
| USA 12-242 | 4300730482 | 1738 FNL, 1505 FEL | 12 | 15S | 08E |
| USA 12-243 | 4300730486 | 950 FNL, 232 FWL | 12 | 15S | 08E |
| USA 11-244 | 4300730463 | 1151 FNL, 1690 FEL | 11 | 15S | 08E |
| USA 11-245 | 4300730462 | 1234 FNL, 1743 FWL | 11 | 15S | 08E |
| Utah 01-246 | 4300730566 | 1619 FNL, 170 FWL | 1 | 15S | 09E |
| Utah 01-247 | 4300730465 | 594 FSL, 266 FWL | 1 | 15S | 08E |
| USA 35-248 | 4300730582 | 828 FSL, 1245 FEL | 35 | 15S | 09E |
| USA 30-251 | 4300730403 | 1169 FSL, 913 FWL | 30 | 15S | 10E |
| Utah 25-252 | 4300730400 | 1937 FNL, 1416 FEL | 25 | 15S | 09E |
| Utah 25-253 | 4300730401 | 809 FSL, 899 FWL | 25 | 15S | 09E |
| Utah 25-254 | 4300730402 | 1787 FSL, 1954 FEL | 25 | 15S | 09E |
| Utah 26-255 | 4300730446 | 1209 FNL, 755 FEL | 26 | 15S | 09E |
| Utah 26-256 | 4300730445 | 1274 FSL, 1351 FWL | 26 | 15S | 09E |
| Utah 26-257 | 4300730444 | 1263 FSL, 1368 FEL | 26 | 15S | 09E |
| Utah 34-258 | 4300730552 | 1198 FNL, 1880 FEL | 34 | 15S | 09E |
| Utah 34-259 | 4300730456 | 1662 FSL, 2046 FEL | 34 | 15S | 09E |
| Utah 35-260 | 4300730447 | 814 FNL, 1900 FEL | 35 | 15S | 09E |

| | | | | | |
|---|---|---|---|---|---|
| Utah 35-261 | 4300730442 | 615 FNL, 818 FWL | 35 | 15S | 09E |
| Utah 35-262 | 4300730443 | 1657 FSL, 1850 FWL | 35 | 15S | 09E |
| Utah 35-263 | 4300730441 | 1785 FSL, 946 FEL | 35 | 15S | 09E |
| USA 01-264 | 4301530336 | 1055 FNL, 441 FWL | 1 | 16S | 09E |
| USA 01-265 | 4301530337 | 1739 FSL, 636 FWL | 1 | 16S | 09E |
| Woolstenhulme 05-266 | 4300730481 | 1389 FNL, 2179 FEL | 5 | 15S | 10E |
| Utah 26-267 | 4300730514 | 1836 FNL, 2130 FWL | 26 | 15S | 09E |
| Utah 27-268 | 4300730457 | 1125 FSL, 1682 FWL | 26 | 15S | 09E |
| Utah 27-269 | 4300730458 | 1661 FSL, 795 FEL | 27 | 15S | 09E |
| Utah 34-270 | 4300730347 | 774 FNL, 756 FWL | 34 | 15S | 09E |
| Utah 34-271 | 4300730496 | 1693 FSL, 965 FWL | 34 | 15S | 09E |
| Utah 33-272 | 4300730502 | 694 FNL, 2034 FEL | 33 | 15S | 09E |
| Utah 33-273 | 4300730493 | 1922 FNL, 328 FWL | 33 | 15S | 09E |
| Utah 33-274 | 4300730494 | 1098 FSL, 1673 FWL | 33 | 15S | 09E |
| Utah 33-275 | 4300730495 | 1401 FSL, 1029 FEL | 33 | 15S | 09E |
| Utah 32-276 | 4300730483 | 738 FL, 1318 FWL | 32 | 15S | 09E |
| Utah 32-277 | 4300730484 | 1613 FSL, 1931 FEL | 32 | 15S | 09E |
| Utah 05-278 | 4301530278 | 1665 FNL, 1923 FEL | 5 | 15S | 09E |
| Utah 04-279 | 4301530340 | 1020 FNL, 1757 FEL | 4 | 16S | 09E |
| Utah 04-280 | 4301530341 | 2087 FNL, 1627 FWL | 4 | 16S | 09E |
| Utah 04-281 | 4301530399 | 999 FSL, 896 FWL | 4 | 16S | 09E |
| Utah 04-282 | 4301530342 | 2188 FSL, 911 FEL | 4 | 16S | 09E |
| Utah 03-283 | 4301530349 | 461 FNL, 1772 FEL | 3 | 16S | 09E |
| Utah 03-284 | 4301530346 | 1218 FNL, 753 FWL | 3 | 16S | 09E |
| Utah 03-285 | 4301530345 | 1917 FSL, 546 FWL | 3 | 16S | 09E |
| Utah 03-286 | 4301530344 | 1690 FSL, 1958 FEL | 3 | 16S | 09E |
| USA 20-287 | 4300730448 | 1395 FNL, 979 FWL | 20 | 15S | 10E |
| USA 20-288 | 4300730451 | 1566 FSL, 1125 FWL | 20 | 15S | 10E |
| USA 30-289 | 4300730452 | 1184 FNL, 1353 FEL | 30 | 15S | 10E |
| USA 30-290 | 4300730453 | 1080 FSL, 1508 FEL | 30 | 14S | 10E |
| USA 11-291 | 4300730501 | 2609 FNL, 1994 FEL | 11 | 14S | 09E |
| USA 11-292 | 4300730500 | 2483 FNL, 664 FWL | 11 | 14S | 09E |
| USA 10-293 | 4300730498 | 2011 FNL, 847 FEL | 10 | 14S | 09E |
| USA 10-294 | 4300730497 | 1750 FNL, 769 FWL | 10 | 14S | 09E |
| USA 09-295 | 4300730499 | 696 FNL, 1198 FEL | 9 | 14S | 09E |
| Fausett 09-296 | 4300730455 | 2072 FNL, 798 FWL | 9 | 14S | 09E |
| USA 08-297 | 4300730491 | 789 FNL, 958 FEL | 8 | 14S | 09E |
| Ritzakis 08-298 | 4300730475 | 798 FNL, 2018 FWL | 8 | 14S | 09E |
| Ritzakis 08-299 | 4300730479 | 2187 FSL, 1885 FWL | 8 | 14S | 09E |
| Ritzakis 08-300 | 4300730476 | 2485 FSL, 1522 FEL | 8 | 14S | 09E |
| USA 04-302 | 4300730489 | 1076 FSL, 1860 FWL | 4 | 14S | 09E |
| USA 04-303 | 4300730490 | 597 FSL, 984 FEL | 4 | 14S | 09E |
| Ritzakis 05-304 | 4300730473 | 688 FSL, 1888 FWL | 5 | 14S | 09E |
| Ritzakis 05-305 | 4300730474 | 1104 FSL, 1196 FEL | 5 | 14S | 09E |
| USA 06-306 | 4300730492 | 399 FSL, 306 FEL | 6 | 14S | 09E |
| Helper 07-307 | 4300730487 | 672 FNL, 962 FWL | 7 | 15S | 09E |
| USA 31-310 | 4300730516 | 624 FNL, 1238 FWL | 31 | 15S | 10E |
| USA 31-311 | 4300730517 | 1934 FSL, 973 FWL | 31 | 15S | 10E |
| USA 01-312 | 4301530350 | 1453 FNL, 1881 FEL | 1 | 16S | 09E |

| | | | | | |
|---|---|---|---|---|---|
| USA 11-314 | 4301530353 | 1262 FNL, 1136 FWL | 11 | 16S | 09E |
| USA 10-317 | 4301530352 | 1221 FNL, 1104 FEL | 10 | 16S | 09E |
| USA 12-322 | 4300730576 | 492 FSL, 495 FWL | 10 | 15S | 08E |
| USA 12-323 | 4300730577 | 540 FSL, 784 FEL | 12 | 15S | 08E |
| USA 11-324 | 4300730575 | 732 FSL, 1763 FEL | 11 | 15S | 08E |
| USA 14-325 | 4300730579 | 890 FNL, 1469 FEL | 14 | 15S | 08E |
| USA 13-326 | 4300730581 | 1065 FNL, 1563 FEL | 13 | 15S | 08E |
| USA 13-327 | 4300730578 | 1092 FNL, 941 FWL | 13 | 15S | 08E |
| USA 35-328 | 4300730583 | 964 FSL, 1999 FWL | 35 | 14S | 08E |
| Utah 09-329 | 4300730561 | 884 FSL, 1324 FEL | 9 | 15S | 09E |
| Utah 06-330 | 4300730562 | 938 FNL, 1564 FWL | 6 | 15S | 09E |
| Utah 20-333 | 4300730669 | 1069 FNL, 1460 FEL | 20 | 15S | 09E |
| Utah 20-334 | 4300730625 | 932 FNL, 1655 FWL | 20 | 15S | 09E |
| Utah 20-335 | 4300730626 | 2152 FSL, 1716 FWL | 20 | 15S | 09E |
| Utah 19-337 | 4300730623 | 926 FNL, 768 FEL | 19 | 15S | 09E |
| Utah 19-338 | 4300730624 | 1789 FSL, 1426 FEL | 19 | 15S | 09E |
| Utah 05-343 | 4301530400 | 1795 FNL, 1431 FWL | 5 | 16S | 09E |
| Utah 05-344 | 4301530401 | 1316 FSL, 1343 FWL | 5 | 16S | 09E |
| Utah 05-345 | 4301530402 | 908 FSL, 1449 FEL | 5 | 16S | 09E |
| Utah 08-354 | 4301530395 | 1073 FNL, 1914 FEL | 8 | 16S | 09E |
| Utah 08-355 | 4301530378 | 1673 FNL, 850 FWL | 8 | 16S | 09E |
| Utah 08-356 | 4301530379 | 1701 FSL, 799 FWL | 8 | 16S | 09E |
| Utah 08-357 | 4301530380 | 1722 FSL, 1599 FEL | 8 | 16S | 09E |
| Utah 09-358 | 4301530300 | 2097 FNL, 1634 FEL | 9 | 16S | 09E |
| Utah 09-359 | 4301530407 | 1787 FNL, 871 FWL | 9 | 16S | 09E |
| Utah 09-360 | 4301530397 | 1323 FSL, 881 FWL | 9 | 16S | 09E |
| Utah 09-361 | 4301530408 | 1564 FSL, 1998 FEL | 9 | 16S | 09E |
| USA 10-362 | 4301530424 | 2225 FNL, 494 FWL | 10 | 16S | 09E |
| USA 14-386 | 4300730634 | 592 FNL, 2236 FWL | 14 | 15S | 08E |
| USA 24-387 | 4300730612 | 1243 FSL, 2306 FWL | 10 | 14S | 08E |
| USA 24-388 | 4300730613 | 1177 FSL, 612 FEL | 24 | 14S | 08E |
| Utah 25-389 | 4300730600 | 737 FNL, 1976 FEL | 25 | 14S | 08E |
| Utah 25-390 | 4300730599 | 1540 FNL, 1354 FWL | 25 | 14S | 08E |
| Utah 25-391A | 4300730658 | 1264 FSL, 1573 FWL | 25 | 14S | 08E |
| Utah 25-392 | 4300730602 | 2045 FSL, 1718 FEL | 25 | 14S | 09E |
| USA 26-393 | 4300730614 | 1666 FNL, 874 FEL | 26 | 14S | 08E |
| USA 26-394 | 4300730615 | 856 FSL, 2377 FWL | 26 | 14S | 08E |
| USA 26-395 | 4300730616 | 1927 FSL, 830 FEL | 26 | 14S | 08E |
| USA 35-396 | 4300730584 | 616 FNL, 1896 FEL | 35 | 14S | 08E |
| USA 35-397 | 4300730585 | 949 FNL, 1264 FWL | 35 | 14S | 08E |
| USA 20-398 | 4300730590 | 1374 FNL, 1387 FEL | 20 | 15S | 10E |
| USA 20-399 | 4300730591 | 1445 FSL, 1128 FEL | 20 | 15S | 10E |
| Utah 09-412 | 4300730580 | 1102 FSL, 1018 FWL | 9 | 15S | 10E |
| Utah 09-413 | 4300730605 | 1007 FNL, 1197 FWL | 9 | 15S | 10E |
| Utah 10-415 | 4301530391 | 1090 FNL, 557 FEL | 10 | 16S | 08E |
| USA 14-416 | 4300730646 | 892 FSL, 1311 FWL | 14 | 15S | 08E |
| USA 14-417 | 4300730647 | 1741 FSL, 1054 FEL | 14 | 15S | 09E |
| USA 13-418 | 4300730645 | 737 FSL, 793 FEL | 13 | 15S | 08E |
| USA 13-419 | 4300730631 | 2617 FSL, 1958 FEL | 13 | 15S | 08E |

| | | | | | |
|---|---|---|---|---|---|
| USA 23-423 | 4300730611 | 408 FSL, 924 FEL | 23 | 14S | 08E |
| USA 34-434 | 4300730621 | 1342 FSL, 922 FEL | 34 | 14S | 08E |
| USA 18-435 | 4300730619 | 1868 FNL, 793 FWL | 18 | 14S | 09E |
| USA 07-436 | 4300730630 | 3121 FNL, 871 FEL | 7 | 14S | 09E |
| USA 03-442 | 4300730710 | 899 FNL, 553 FEL | 3 | 15S | 08E |
| USA 24-443 | 4300730651 | 1780 FNL, 2247 FEL | 24 | 15S | 08E |
| USA 24-444 | 4300730648 | 1338 FNL, 1153 FWL | 24 | 15S | 08E |
| USA 24-446 | 4300730708 | 1377 FNL, 2340 FWL | 24 | 14S | 08E |
| USA 13-447 | 4300730707 | 2044 FSL, 741 FEL | 13 | 14S | 08E |
| USA 24-448 | 4300730652 | 2146 FSL, 2021 FEL | 24 | 15S | 08E |
| Utah 34-456 | 4300730713 | 755 FNL, 1377 FEL | 34 | 14S | 08E |
| USA 13-470 | 4300730706 | 1741 FNL, 554 FEL | 13 | 14S | 08E |
| Utah 06-483 | 4300730716 | 2456 FSL, 988 FWL | 6 | 15S | 09E |
| American Quasar D1 | 4300730040 | 999 FSL, 1552 FWL | 31 | 14S | 10E |
| Arcadia-Telonis D2 | 4300730093 | 465 FSL, 560 FEL | 19 | 14S | 09E |
| Utah D3 | 4300730290 | 1600 FSL, 1530 FEL | 18 | 15S | 10E |
| Utah D4 | 4300730314 | 600 FNL, 500 FWL | 24 | 14S | 09E |
| Fausett D5 | 4300730351 | 467 FNL, 1461 FWL | 16 | 14S | 09E |
| Drew D6 | 4300730100 | 1300 FSL, 830 FWL | 34 | 14S | 09E |
| Utah D7 | 4301530338 | 1371 FSL, 1530 FEL | 2 | 14S | 09E |
| Utah D8 | 4300730431 | 1342 FNL, 350 FWL | 12 | 15S | 09E |
| Utah D9 | 4300730438 | 1960 FNL, 1487 FWL | 32 | 14S | 09E |
| RGC D10 | 4300730520 | 162 FNL, 1557 FEL | 28 | 15S | 09E |
| USA D11 | 4301530356 | 1513 FNL, 2437 FEL | 13 | 16S | 09E |
| Sampinos D14 | 4300730567 | 1695 FSL, 2133 FEL | 16 | 15S | 10E |

LAW OFFICES
PRUITT, GUSHEE & BACHTELL
SUITE 1850 BENEFICIAL LIFE TOWER
SALT LAKE CITY, UTAH 84111-1495
(801) 531-8446
TELECOPIER (801) 531-8468
E-MAIL: mail@pgblaw.com

THOMAS W BACHTELL
A JOHN DAVIS, III
JOHN W ANDERSON
FREDERICK M MACDONALD
GEORGE S YOUNG
ANGELA L FRANKLIN
JOHN S FLITTON
MICHAEL S JOHNSON
WILLIAM E WARD

SENIOR COUNSEL:
ROBERT G PRUITT, JR
OLIVER W GUSHEE, JR

OF COUNSEL:
ROBERT G PRUITT, III
BRENT A BOHMAN

January 29, 2001

**HAND DELIVERED**

Mr. Jim Thompson
Utah Division of Oil, Gas & Mining
1594 W. North Temple
Salt Lake City, UT 84116

*Re: River Gas/Phillips Merger*

Dear Mr. Thompson:

As you may know, River Gas Corporation ("RGC") merged into Phillips Petroleum Company ("Phillips") effective December 31, 2000 at 11:59 p.m. I have enclosed a Certificate of Articles of Merger issued by the Utah Department of Commerce and, although duplicative, a sundry notice formally evidencing the merger for your records, and a list of all wells, including injection wells, formerly operated by RGC.

Please change the Division's records to reflect the change in operator of these wells from RGC to Phillips. All operational questions should be directed to Phillips at the following address:

Phillips Petroleum Company
Attn: Billy Stacy, Operations Manager
P.O. Box 3368
Englewood, CO 80155-3368
Telephone No.: (720) 344-4984

Phillips currently has a bond on file with the Division (a copy of which is enclosed for your reference), but I understand an $80,000 Letter of Credit is in the process of being substituted.

On behalf of Phillips, I thank you for your cooperation. Should you have any further questions or concerns, please do not hesitate to contact me.

Yours very truly,

Frederick M. MacDonald

FMM:cs
2078.16
Enclosures
cc: W. H. Rainbolt
Billy Stacy

**Utah Department of Commerce**
**Division of Corporations & Commercial Code**
**160 East 300 South, 2nd Floor, Box 146705**
**Salt Lake City, UT 84114-6705**
**Phone: (801) 530-4849**
**Toll Free: (877) 526-3994 Utah Residents**
**Fax: (801) 530-6438**
**Web site: http://www.commerce.state.ut.us**

Registration Number: 562960-0143 01/12/01
Business Name: PHILLIPS PETROLEUM COMPANY
Registered Date: JUNE 14, 1946

# CERTIFICATE OF ARTICLES OF MERGER

THE UTAH DIVISION OF CORPORATIONS AND COMMERCIAL CODE ("DIVISION") HEREBY CERTIFIES THAT

ARTICLES OF MERGER WERE FILED WITH THIS OFFICE ON DECEMBER 12, 2000 MERGING RIVER GAS CORPORATION, A CORPORATION OF THE STATE OF ALABAMA, INTO PHILLIPS PETROLEUM COMPANY, THE SURVIVING CORPORATION WHICH IS OF THE STATE OF DELAWARE, AS APPEARS OF RECORD IN THE OFFICE OF THE DIVISION.

Ric Campbell
Acting Division Director of
Corporations and Commercial Code

00171151

*State of Delaware*

PAGE 1

# *Office of the Secretary of State*

Date: 12/13/2000
Receipt Number: 188532
Amount Paid: $145.00

I, EDWARD J. FREEL, SECRETARY OF STATE OF THE STATE OF DELAWARE, DO HEREBY CERTIFY THE ATTACHED IS A TRUE AND CORRECT COPY OF THE CERTIFICATE OF OWNERSHIP, WHICH MERGES:

"RIVER GAS CORPORATION", A ALABAMA CORPORATION,

WITH AND INTO "PHILLIPS PETROLEUM COMPANY" UNDER THE NAME OF "PHILLIPS PETROLEUM COMPANY", A CORPORATION ORGANIZED AND EXISTING UNDER THE LAWS OF THE STATE OF DELAWARE, AS RECEIVED AND FILED IN THIS OFFICE THE SIXTH DAY OF DECEMBER, A.D. 2000, AT 10 O'CLOCK A.M.

AND I DO HEREBY FURTHER CERTIFY THAT THE EFFECTIVE DATE OF THE AFORESAID CERTIFICATE OF OWNERSHIP IS THE THIRTY-FIRST DAY OF DECEMBER, A.D. 2000, AT 11:59 O'CLOCK A.M.

A FILED COPY OF THIS CERTIFICATE HAS BEEN FORWARDED TO THE NEW CASTLE COUNTY RECORDER OF DEEDS.

12-12-00P04:02 RCVD

State of Utah
Department of Commerce
Division of Corporations and Commercial Code
I Hereby certify that the foregoing has been filed and approved on this 12 day of Dec 20 00 in the office of this Division and hereby issue this Certificate thereof.

Examiner _____ Date 12/28/00

RIC CAMPBELL
ACTING DIRECTOR

TAP

FILED

DEC 12 2000

Utah Div. Of Corp. & Comm. Code

*Edward J. Freel, Secretary of State*

0064324 8100M

AUTHENTICATION: 0837738

001609453

DATE: 12-07-00

STATE OF DELAWARE
SECRETARY OF STATE
DIVISION OF CORPORATIONS
FILED 10:00 AM 12/06/2000
001609453 - 0064324

# CERTIFICATE OF OWNERSHIP AND MERGER

OF

RIVER GAS CORPORATION

(an Alabama corporation)

into

Phillips Petroleum Company

(a Delaware corporation)

It is hereby certified that:

1. Phillips Petroleum Company [hereinafter sometimes referred to as the "Corporation"] is a business corporation of the State of Delaware.

2. The Corporation is the owner of all of the outstanding shares of each class of stock of River Gas Corporation, which is a business corporation of the State of Alabama.

3. The laws of the jurisdiction of organization of River Gas Corporation permit the merger of a business corporation of that jurisdiction with a business corporation of another jurisdiction.

4. The Corporation hereby merges River Gas Corporation into the Corporation.

5. The following is a copy of the resolutions adopted on November 21, 2000 by the Board of Directors of the Corporation to merge the said River Gas Corporation into the Corporation:

> "1. Phillips Petroleum Company, which is a business corporation of the State of Delaware and is the owner of all of the outstanding shares of River Gas Corporation, which is a business corporation of the State of Alabama, hereby merges River Gas Corporation into Phillips Petroleum Company pursuant to the provisions of the Alabama Business Corporation Act and pursuant to the

12-12-00P04:02 RCVD

provisions of Section 253 of the General Corporation Law of Delaware.

"2. The separate existence of River Gas Corporation shall cease at the effective time and date of the merger pursuant to the provisions of the Alabama Business Corporation Act; and Phillips Petroleum Company shall continue its existence as the surviving corporation pursuant to the provisions of Section 253 of the General Corporation Law of Delaware.

"3. The Articles of Incorporation of Phillips Petroleum Company are not amended in any respect by this Plan of Merger.

"4. The issued shares of River Gas Corporation shall not be converted or exchanged in any manner, but each said share which is issued immediately prior to the effective time and date of the merger shall be surrendered and extinguished.

"5. Each share of Phillips Petroleum Company outstanding immediately prior to the effective time and date of the merger is to be an identical outstanding share of Phillips Petroleum Company at the effective time and date of the merger.

"6. No shares of Phillips Petroleum Company and no shares, securities, or obligations convertible into such shares are to be issued or delivered under this Plan of Merger.

"7. The Board of Directors and the proper officers of Phillips Petroleum Company are hereby authorized, empowered, and directed to do any and all acts and things, and to make, execute, deliver, file, and/or record any and all instruments, papers, and documents which shall be or become necessary, proper, or convenient to carry out or put into effect any of the provisions of this Plan of Merger or of the merger herein provided for. "

" This Company approves that the effective time and date of the merger herein provided for in the State of Alabama shall be 11:59 p.m. on December 31, 2000."

"Any Vice President, the Treasurer, any Assistant Treasurer, the Secretary, any Assistant Secretary, and each of them severally, be and hereby is authorized to make, execute,

deliver, file, and/or record any and all instruments, papers, and documents which shall be or become necessary, proper, or convenient to carry out or put into effect any of the provisions of these resolutions and to do or cause to be done all such acts as are necessary to give effect to the purpose and intent of the approval herein set forth."

6. This Certificate of Ownership and Merger shall be effective at 11:59 p.m. on December 31, 2000.

Executed on November 27, 2000

Phillips Petroleum Company

N. A. Loftis

N. A. Loftis, Assistant Secretary

# United States Department of the Interior

BUREAU OF LAND MANAGEMENT
Utah State Office
P.O. Box 45155
Salt Lake City, UT 84145-0155


In Reply Refer To:
3106
UTU-47157 et al
(UT-932)

JAN 30 2001

NOTICE

| | | |
|---|---|---|
| Phillips Petroleum Company<br>Attn: W. H. Rainbolt, Rocky Mtn. Region-Land<br>Box 1967<br>Houston, TX 77251-1967 | :<br>:<br>:<br>: | Oil and Gas |

Merger Recognized

Acceptable evidence has been filed in this office concerning the merger of River Gas Corporation into Phillips Petroleum Company with Phillips Petroleum Company being the surviving entity.

The oil and gas lease files and rights-of-way files identified on the enclosed exhibit have been noted as to the merger. The exhibit is the list supplied by the representative of the companies, and verified by our computerized records. We have not adjudicated the case files to determine if the entity affected by the merger holds an interest in the leases identified, nor have we attempted to identify leases where the entity is the operator on the ground, maintaining no vested record title or operating rights interest. We are notifying the Minerals Management Service and all applicable BLM offices of the merger by a copy of this notice. If additional documentation for a change of operator is required by our Field Offices, you will be contacted by them.

By recognition of the merger the obligor is automatically changed by operation of law from River Gas Corporation to Phillips Petroleum Company on Letter of Credit No. P-207337 (BLM Bond No. UT0829). A rider to BLM Bond No. ES0048 assuming any and all liabilities of BLM Bond No. UT0829 must be submitted for approval to the Eastern States Office, Attn: Bill Forbes, 7450 Boston Boulevard, Springfield, VA 22153. After the rider is approved, the Letter of Credit will be returned to the financial institution that issued it.

ROBERT LOPEZ

Robert Lopez
Chief, Branch of
Minerals Adjudication

Enclosure
Exhibit of Leases


RECEIVED
FEB 02 2001
DIVISION OF
OIL, GAS AND MINING

cc: Moab Field Office
Vernal Field Office
Price Field Office
MMS–Reference Data Branch, MS 3130, P.O. Box 5860, Denver, CO 80217
State of Utah, DOGM, Attn: Jim Thompson (Ste. 1210), Box 145801, SLC, UT 84114
The Chase Manhattan Bank, Attn: Standby Letter of Credit Dept., 4 Chase Metrotech Center, 8th Floor Brooklyn, NY 11245
Teresa Thompson (UT-931)
LaVerne Steah (UT-942)
Pruitt, Gushee & Bachtell, Attn: Frederick M. MacDonald, Suite 1850 Beneficial Life Tower, Salt Lake City, Utah 84111-1495
BLM, Eastern States Office (Attn: Bill Forbes)

Division of Oil, Gas and Mining

# OPERATOR CHANGE WORKSHEET

| ROUTING | | |
|---|---|---|
| 1. GLH | | 4-KAS ✓ |
| 2. CDW ✓ | | 5-SLP ✓ |
| 3. JLT | | 6-FILE |

Enter date after each listed item is completed

Change of Operator (Well Sold) — Designation of Agent

Operator Name Change (Only) — **X Merger**

The operator of the well(s) listed below has changed, effective: **12-31-2000**

| **FROM:** (Old Operator): | **TO:** ( New Operator): |
|---|---|
| RIVER GAS CORPORATION | PHILLIPS PETROLEUM COMPANY |
| Address: 6825 S. 5300 W. P. O. BOX 851 | Address: P. O. BOX 3368 |
| | |
| PRICE, UT 84501 | ENGLEWOOD, CO 80155-3368 |
| Phone: 1-(435)-613-9777 | Phone: 1-(720)-344-4984 |
| Account N1605 | Account N1475 |

**CA No.** **Unit:** **DRUNKARDS WASH**

## WELL(S)

| NAME | API NO. | ENTITY NO. | SEC. TWN RNG | LEASE TYPE | WELL TYPE | WELL STATUS |
|---|---|---|---|---|---|---|
| UTAH 01-208 | 43-007-30464 | 11256 | 01-15S-08E | STATE | GW | P |
| UTAH 01-247 | 43-007-30465 | 11256 | 01-15S-08E | STATE | GW | P |
| UTAH 1-209 | 43-007-30467 | 11256 | 01-15S-08E | STATE | GW | P |
| UTAH 01-246 | 43-007-30566 | 11256 | 01-15S-08E | STATE | GW | P |
| UTAH 02-169 | 43-007-30308 | 11256 | 02-15S-08E | STATE | GW | P |
| UTAH 02-166 | 43-007-30337 | 11256 | 02-15S-08E | STATE | GW | P |
| UTAH 02-167 | 43-007-30338 | 11256 | 02-15S-08E | STATE | GW | P |
| UTAH 36-1-2 | 43-007-30178 | 11256 | 36-14S-09E | STATE | GW | P |
| STATE OF UTAH 36-3-4 | 43-007-30142 | 11256 | 36-14S-09E | STATE | GW | P |
| UTAH 36-11-11 | 43-007-30184 | 11256 | 36-14S-09E | STATE | GW | P |
| UTAH 18-93 | 43-007-30587 | 11256 | 18-14S-10E | STATE | GW | P |
| UTAH 19-14-12 | 43-007-30182 | 11256 | 19-14S-10E | STATE | GW | P |
| UTAH 19-77 | 43-007-30252 | 11256 | 19-14S-10E | STATE | GW | P |
| UTAH 30-5-13 | 43-007-30179 | 11256 | 30-14S-10E | STATE | GW | P |
| UTAH 30-13-14 | 43-007-30185 | 11256 | 30-14S-10E | STATE | GW | P |
| UTAH 30-125 | 43-007-30262 | 11256 | 30-14S-10E | STATE | GW | P |
| UTAH 31-3-3 | 43-007-30143 | 11256 | 31-14S-10E | STATE | GW | P |
| UTAH 31-12-10 | 43-007-30183 | 11256 | 31-14S-10E | STATE | GW | P |
| UTAH 31-79 | 43-007-30253 | 11256 | 31-14S-10E | STATE | GW | P |
| UTAH 31-126 | 43-007-30305 | 11256 | 31-14S-10E | STATE | GW | P |

## OPERATOR CHANGES DOCUMENTATION

1. (R649-8-10) Sundry or legal documentation was received from the **FORMER** operator on: 01/29/2001
2. (R649-8-10) Sundry or legal documentation was received from the **NEW** operator on: 01/29/2001
3. The new company has been checked through the **Department of Commerce, Division of Corporations Database on:** 02/15/2001

4. Is the new operator registered in the State of Utah: YES Business Number: 562960-0143

5. If **NO**, the operator was contacted contacted on: _____

6. **Federal and Indian Lease Wells:** The BLM and or the BIA has approved the (merger, name change, or operator change for all wells listed on Federal or Indian leases on: 01/30/2001

7. **Federal and Indian Units:** The BLM or BIA has approved the successor of unit operator for wells listed on: N/A

8. **Federal and Indian Communization Agreements ("CA"):** The BLM or the BIA has approved the operator change for all wells listed involved in a CA on: N/A

9. **Underground Injection Control ("UIC") Pro** The Division has approved UIC Form 5, **Transfer of Authority to Inject,** for the enhanced/secondary recovery unit/project for the water disposal well(s) listed on: _____

## DATA ENTRY:

1. Changes entered in the **Oil and Gas Database on:** 02/27/2001

2. Changes have been entered on the **Monthly Operator Change Spread Sheet on:** 02/27/2001

3. Bond information entered in RBDMS on: N/A

4. Fee wells attached to bond in RBDMS on: N/A

## STATE BOND VERIFICATION:

1. State well(s) covered by Bond No.: ~~N/A~~ 5952189

## FEE WELLS - BOND VERIFICATION/LEASE INTEREST OWNER NOTIFICATION:

1. (R649-3-1) The **NEW** operator of any fee well(s) listed has furnished a bond: N/A

2. The **FORMER** operator has requested a release of liability from their bond on: N/A
   The Division sent response by letter on: N/A

3. (R649-2-10) The **FORMER** operator of the Fee wells has been contacted and informed by a letter from the Division of their responsibility to notify all interest owners of this change on: N/A

## FILMING:

1. All attachments to this form have been **MICROFILMED** on: 3-20-01

## FILING:

1. **ORIGINALS/COPIES** of all attachments pertaining to each individual well have been filled in each well file on: _____

**COMMENTS:**

FORM 9

STATE OF UTAH

DIVISION OF OIL, GAS AND MINING

# SUNDRY NOTICES AND REPORTS ON WELLS

Do not use this form for proposals to drill new wells, deepen existing wells, or to reenter plugged and abandoned wells.
Use APPLICATION FOR PERMIT TO DRILL OR DEEPEN form for such proposals.

5. Lease Designation and Serial Number: U - 48187

6. If Indian, Allottee or Tribe Name: N/A

7. Unit Agreement Name: UTU67921X Drunkards Wash

1. Type of Well: OIL ☐ GAS ☒ OTHER:

8. Well Name and Number: UT 01-209

2. Name of Operator: Phillips Petroleum Company

9. API Well Number: 43-007-30467

3. Address and Telephone Number: 6825 South 5300 West, P.O. Box 851, Price, UT 84501 (435) 613-9777

10. Field or Pool, or Wildcat: Drunkards Wash

4. Location of Well Footages: 2271' FSL, 1251' FEL

QQ, Sec., T., R., M.: NE/SE, SEC. 01, T15S, R08E, SLB & M

County: Carbon County

State: Utah

## 11. CHECK APPROPRIATE BOXES TO INDICATE NATURE OF NOTICE, REPORT, OR OTHER DATA

**NOTICE OF INTENT**
**(Submit in Duplicate)**

- ☐ Abandon
- ☐ Repair Casing
- ☐ Change of Plans
- ☐ Convert to Injection
- ☐ Fracture Treat or Acidize
- ☐ Multiple Completion
- ☐ Other
- ☐ New Construction
- ☐ Pull or Alter Csg
- ☐ Recomplete
- ☐ Reperforate
- ☐ Vent or Flare
- ☐ Water Shut-Off

Approximate date work will start

**SUBSEQUENT REPORT**
**(Submit Original Form Only)**

- ☐ Abandon *
- ☐ Repair Casing
- ☐ Change of Plans
- ☐ Convert to Injection
- ☐ Fracture Treat or Acidize
- ☒ Other Chemical/Flush Treatment
- ☐ New Construction
- ☐ Pull or Alter Csg
- ☐ Reperforate
- ☐ Vent or Flare
- ☐ Water Shut-Off

Date of work completion 12/03/01

Report results of Multiple Completions and Recompletions to different reservoirs on WELL COMPLETION OR RECOMPLETION REPORT AND LOG form.

* Must be accompanied by a cement verification report.

12. DESCRIBE PROPOSED OR COMPLETED OPERATIONS (Clearly state all pertinent details, and give pertinent dates. If well is directionally drilled, give subsurface locations and measured and true vertical depths for all markers and zones pertinent to this work.)

Please be advised that the above referenced well was chemically treated with 4000 gallons of low Ph fluid & 250 gallons of 15% HCL on 12/03/01.

RECEIVED

DIVISION OF OIL, GAS AND MINING

13.

Name & Signature: Lynnettre Allred Lynnette Allred Title: Administrative Assistant Date: 12/04/01

(This space for state use only)

(4/94) (See Instructions on Reverse Side)

ConocoPhillips

Divisions of Oil, Gas, and Mining
Attn: Mr. John Baza
1594 West North Temple,
Suite 1210, P. O. Box 145801
Salt Lake City, UT 84114-5801

Re: Notice of Address Change, Merger and Name Change
Address Change effective **December 2, 2002**
Merger and Name Change effective **December 31, 2002**

Gentlemen:

1. Effective December 2, 2002, Phillips Petroleum Company will close its Englewood, Colorado Rocky Mountain Region office. After that time, all correspondence, notices and invoice for Land related matters should be directed to the address(es) noted below. Note that until December 31, 2002, all properties in which Phillips held an interest will continue to be operated by Phillips Petroleum Company, a wholly-owned subsidiary of ConocoPhillips.

2. On December 31, 2002, Phillips Petroleum Company and Conoco Inc. will merge, and the surviving corporation will be renamed "ConocoPhillips Company".

In accordance with the notice provisions of the Operating Agreements and other agreements, if any, between our companies, please adjust your company/organization records, effective for address purposes as of December 2, 2002, and for company name purposes, as of January 1, 2003, to reflect the following information for addressing and delivery of notices, invoicing and payment, and communications with ConocoPhillips Company. This will also apply to Lease Sale notices and other lease-related correspondence and notifications.

**U.S. Mail Address:**

ConocoPhillips Company
P.O. Box 2197
Houston, Texas 77252
Attn: Chief Landman,
San Juan/Rockies

**Physical Address & Overnight Delivery:**

ConocoPhillips Company
550 Westlake Park Blvd.
Three Westlake Park
3WL, Room WL 9000
Houston, Texas 77079
Attn: Chief Landman,
San Juan/Rockies

**All ballots and official notices/responses sent by facsimile transmission should be sent to the following contact:**

**Attn: Chief Landman,**
**San Juan/Rockies**

**Fax No.: 832-486-2688 or**
**832-486-2687**

Please contact the undersigned immediately if you have any questions. This notice does not apply to royalty inquiries, joint interest billings, or revenue remittances. Please continue to use the same addresses you are currently using for these matters

Sincerely, William Rainbolt

RECEIVED
DEC 0 2 2002
DIVISION OF
OIL, GAS AND MINING

FORM 9

**STATE OF UTAH**
DEPARTMENT OF NATURAL RESOURCES
DIVISION OF OIL, GAS AND MINING

5. LEASE DESIGNATION AND SERIAL NUMBER:

# SUNDRY NOTICES AND REPORTS ON WELLS

6. IF INDIAN, ALLOTTEE OR TRIBE NAME:

7. UNIT or CA AGREEMENT NAME:

Do not use this form for proposals to drill new wells, significantly deepen existing wells below current bottom-hole depth, reenter plugged wells, or to drill horizontal laterals. Use APPLICATION FOR PERMIT TO DRILL form for such proposals.

1. TYPE OF WELL: OIL WELL ☐ GAS WELL ☐ OTHER All

8. WELL NAME and NUMBER: See Attached List

2. NAME OF OPERATOR: Phillips Petroleum Company

9. API NUMBER: See List

3. ADDRESS OF OPERATOR: 980 Plaza Office CITY Bartlesville STATE OK ZIP 74004

PHONE NUMBER: (918) 661-4415

10. FIELD AND POOL, OR WILDCAT:

4. LOCATION OF WELL

FOOTAGES AT SURFACE: See Attached List

COUNTY:

QTR/QTR, SECTION, TOWNSHIP, RANGE, MERIDIAN:

STATE: UTAH

11. CHECK APPROPRIATE BOXES TO INDICATE NATURE OF NOTICE, REPORT, OR OTHER DATA

| TYPE OF SUBMISSION | TYPE OF ACTION | | |
|---|---|---|---|
| ☐ NOTICE OF INTENT (Submit in Duplicate) | ☐ ACIDIZE | ☐ DEEPEN | ☐ REPERFORATE CURRENT FORMATION |
| Approximate date work will start: | ☐ ALTER CASING | ☐ FRACTURE TREAT | ☐ SIDETRACK TO REPAIR WELL |
| | ☐ CASING REPAIR | ☐ NEW CONSTRUCTION | ☐ TEMPORARILY ABANDON |
| | ☐ CHANGE TO PREVIOUS PLANS | ☑ OPERATOR CHANGE | ☐ TUBING REPAIR |
| | ☐ CHANGE TUBING | ☐ PLUG AND ABANDON | ☐ VENT OR FLARE |
| ☑ SUBSEQUENT REPORT (Submit Original Form Only) | ☐ CHANGE WELL NAME | ☐ PLUG BACK | ☐ WATER DISPOSAL |
| Date of work completion: | ☐ CHANGE WELL STATUS | ☐ PRODUCTION (START/RESUME) | ☐ WATER SHUT-OFF |
| | ☐ COMMINGLE PRODUCING FORMATIONS | ☐ RECLAMATION OF WELL SITE | ☐ OTHER: |
| | ☐ CONVERT WELL TYPE | ☐ RECOMPLETE - DIFFERENT FORMATION | |

12. DESCRIBE PROPOSED OR COMPLETED OPERATIONS. Clearly show all pertinent details including dates, depths, volumes, etc.

Conoco Inc. was merged into Phillips Petroleum Company, the surviving corporation, on December 31, 2002. In connection with this merger and effective on the same date, the name of the surviving corporation was changed to "ConocoPhillips Company". We are requesting that a new Operator Number be assigned to ConocoPhillips Company.

Please send production reporting forms to Herb Henderson at ConocoPhillips Company, 315 S. Johnstone, 980 Plaza Office, Bartlesville, OK 74004. Herb's phone number is 918-661-4415.

Current Operator
Phillips Petroleum Company
Steve de Albuquerque

New Operator
ConocoPhillips Company
Yolanda Perez

RECEIVED
JAN 0 8 2003
DIV. OF OIL, GAS & MINING

NAME (PLEASE PRINT) Yolanda Perez TITLE Sr. Regulatory Analyst

SIGNATURE Yolanda Perez DATE 12/30/2002

(This space for State use only)

(5/2000) (See Instructions on Reverse Side)

ConocoPhillips

# SECRETARY'S CERTIFICATE

I, the undersigned, Jennifer M. Garcia, Assistant Secretary of ConocoPhillips Company, formerly Phillips Petroleum Company, organized and existing under and by virtue of the laws of the State of Delaware (the "Corporation"), hereby certify that:

1. As Assistant Secretary I am authorized to execute this certificate on behalf of the Corporation.

2. The attached photocopy of the Certificate of Amendment to the Restated Certificate of Incorporation of Phillips Petroleum Company (to be renamed ConocoPhillips Company) is a true and correct copy as filed in the office of the Secretary of State of Delaware on the 12th day of December 2002, with an effective date of January 1, 2003 and such Certificate of Amendment has not been modified, amended, rescinded or revoked and is in full force and effect as of the date hereof.

3. The attached photocopy of the Certificate of Merger of Conoco Inc. with and into ConocoPhillips Company is a true and correct copy as filed in the office of the Secretary of State of Delaware on the 12th day of December 2002, with an effective date of December 31, 2002 and such Certificate of Merger has not been modified, amended, rescinded or revoked and is in full force and effect as of the date hereof.

IN WITNESS WHEREOF, I have hereunto set my hand as Assistant Secretary and affixed the corporate seal of the Corporation this 7th day of January 2003.

Assistant Secretary
ConocoPhillips Company

STATE OF TEXAS §
§
COUNTY OF HARRIS §

This instrument was acknowledged before me on January 7, 2003, by Jennifer M. Garcia, Assistant Secretary of ConocoPhillips Company, a Delaware corporation, on behalf of said Corporation.

SUSAN F. SHORT
NOTARY PUBLIC
STATE OF TEXAS
EXPIRES
11-12-2005

Notary Public

RECEIVED
JAN 0 8 2003
DIV. OF OIL, GAS & MINING

# Delaware



*The First State*

I, HARRIET SMITH WINDSOR, SECRETARY OF STATE OF THE STATE OF DELAWARE, DO HEREBY CERTIFY THE ATTACHED IS A TRUE AND CORRECT COPY OF THE CERTIFICATE OF AMENDMENT OF "PHILLIPS PETROLEUM COMPANY", CHANGING ITS NAME FROM "PHILLIPS PETROLEUM COMPANY" TO "CONOCOPHILLIPS COMPANY", FILED IN THIS OFFICE ON THE TWELFTH DAY OF DECEMBER, A.D. 2002, AT 1:41 O'CLOCK P.M.

AND I DO HEREBY FURTHER CERTIFY THAT THE EFFECTIVE DATE OF THE AFORESAID CERTIFICATE OF AMENDMENT IS THE THIRTY-FIRST DAY OF DECEMBER, A.D. 2002, AT 11 O'CLOCK P.M.

RECEIVED
JAN 0 8 2003
DIV. OF OIL, GAS & MINING

Harriet Smith Windsor

Harriet Smith Windsor, Secretary of State

0064324 8100

AUTHENTICATION: 2183360

030002793

DATE: 01-02-03

STATE OF DELAWARE
SECRETARY OF STATE
DIVISION OF CORPORATIONS
FILED 01:41 PM 12/12/2002
020763238 - 0064324

**CERTIFICATE OF AMENDMENT**

**to the**

**RESTATED CERTIFICATE OF INCORPORATION**

**of**

**PHILLIPS PETROLEUM COMPANY**
**(to be renamed ConocoPhillips Company)**

Phillips Petroleum Company ("Phillips"), a corporation organized and existing under the General Corporation Law of the State of Delaware (the "DGCL"), hereby certifies that:

1. The amendments to Phillips' Restated Certificate of Incorporation set forth below were duly adopted in accordance with the provisions of Section 242 of the DGCL and have been consented to in writing by the sole stockholder of Phillips in accordance with Section 228 of the DGCL.

2. Phillips' Restated Certificate of Incorporation is hereby amended by deleting Article I thereof and replacing in lieu thereof a new Article I reading in its entirety as follows:

"The name of the corporation (which is hereinafter referred to as the "Corporation") is ConocoPhillips Company."

3. Phillips' Restated Certificate of Incorporation is hereby amended by deleting Section 1 of Article IV thereof and replacing in lieu thereof a new Section 1 reading in its entirety as follows:

"Section 1. The Corporation shall be authorized to issue 2,100 shares of capital stock, of which 2,100 shares shall be shares of Common Stock, $.01 par value ("Common Stock")."

4. Pursuant to Section 103(d) of the DGCL, this amendment will become effective at 11:00 p.m., Eastern time, on December 31, 2002.



RECEIVED
JAN 0 8 2003
DIV. OF OIL, GAS & MINING

IN WITNESS WHEREOF, Phillips has caused this certificate to be executed this 12th day of December, 2002.

PHILLIPS PETROLEUM COMPANY

By: _____
Name: Rick A. Harrington
Title: Senior Vice President, Legal, and General Counsel

HOU03:884504.1

RECEIVED
JAN 0 8 2003
DIV. OF OIL, GAS & MINING

# Delaware



*The First State*

I, HARRIET SMITH WINDSOR, SECRETARY OF STATE OF THE STATE OF DELAWARE, DO HEREBY CERTIFY THE ATTACHED IS A TRUE AND CORRECT COPY OF THE CERTIFICATE OF MERGER, WHICH MERGES:

"CONOCO INC.", A DELAWARE CORPORATION,

WITH AND INTO "CONOCOPHILLIPS COMPANY" UNDER THE NAME OF "CONOCOPHILLIPS COMPANY", A CORPORATION ORGANIZED AND EXISTING UNDER THE LAWS OF THE STATE OF DELAWARE, AS RECEIVED AND FILED IN THIS OFFICE THE TWELFTH DAY OF DECEMBER, A.D. 2002, AT 1:44 O'CLOCK P.M.

AND I DO HEREBY FURTHER CERTIFY THAT THE EFFECTIVE DATE OF THE AFORESAID CERTIFICATE OF MERGER IS THE THIRTY-FIRST DAY OF DECEMBER, A.D. 2002, AT 11:59 O'CLOCK P.M.

RECEIVED
JAN 0 8 2003
DIV. OF OIL, GAS & MINING

Harriet Smith Windsor

Harriet Smith Windsor, Secretary of State

0064324 8100M

AUTHENTICATION: 2183370

030002793

DATE: 01-02-03

STATE OF DELAWARE
SECRETARY OF STATE
DIVISION OF CORPORATIONS
FILED 01:44 PM 12/12/2002
020763253 - 0064324

# CERTIFICATE OF MERGER

**of**

**Conoco Inc.**
**(a Delaware corporation)**

**with and into**

**ConocoPhillips Company**
**(a Delaware corporation)**

Phillips Petroleum Company, a Delaware corporation to be renamed ConocoPhillips Company prior to the effective time of this certificate of merger (the "Surviving Corporation"), in compliance with the requirements of the General Corporation Law of the State of Delaware (the "DGCL") and desiring to effect a merger of Conoco Inc., a Delaware corporation formerly incorporated under the name Du Pont Holdings, Inc. (the "Merging Corporation," and together with the Surviving Corporation, the "Constituent Corporations"), with and into the Surviving Corporation, and acting by its duly authorized officer, DOES HEREBY CERTIFY that:

**First:** As of the date hereof, the name and state of incorporation of each of the Constituent Corporations of the merger are as follows:

| NAME | STATE OF INCORPORATION |
|---|---|
| PHILLIPS PETROLEUM COMPANY | Delaware |
| CONOCO INC. | Delaware |

**Second:** An agreement and plan of merger has been approved, adopted, certified, executed and acknowledged by each of the Constituent Corporations in accordance with the requirements of Section 251 of the DGCL;

**Third:** The name of the Surviving Corporation will be ConocoPhillips Company;

**Fourth:** The Certificate of Incorporation of ConocoPhillips Company immediately prior to the merger shall be the Certificate of Incorporation of the Surviving Corporation until such time as it may be amended in accordance with applicable law and the provisions thereof;

**Fifth:** The executed agreement and plan of merger is on file at an office of the Surviving Corporation, the address of which is 600 North Dairy Ashford, Houston, Texas 77079;

RECEIVED
JAN 0 8 2003
DIV. OF OIL, GAS & MINING

**Sixth:** A copy of the agreement and plan of merger will be furnished by the Surviving Corporation, on request and without cost, to any stockholder of any Constituent Corporation; and

**Seventh:** Pursuant to Section 103(d) of the DGCL, this certificate of merger will become effective at 11:59 p.m., Eastern time, on December 31, 2002.

Dated: December 12, 2002

**PHILLIPS PETROLEUM COMPANY**
(a Delaware corporation)

By:_____
Name: Rick A. Harrington
Title: Senior Vice President, Legal, and General Counsel

RECEIVED
JAN 0 8 2003
DIV. OF OIL, GAS & MINING

STATE OF UTAH
DEPARTMENT OF COMMERCE
REGISTRATION

CONOCOPHILLIPS COMPANY

EFFECTIVE 06/14/1946

EXPIRATION *RENEWAL

REFERENCE NUMBER(S), CLASSIFICATION(S) & DETAIL(S)

Corporation - Foreign - Profit
562960-0143

UNITED STATES CORP CO
CONOCOPHILLIPS COMPANY
GATEWAY TOWER EAST STE 900
10 EAST SOUTH TEMPLE
SLC UT 84133

RECEIVED
JAN 0 8 2003
DIV. OF OIL, GAS & MINING

# STATE OF UTAH
# DEPARTMENT OF COMMERCE
# DIVISION OF CORPORATIONS & COMMERCIAL CODE

## REGISTRATION

EFFECTIVE DATE: 06/14/1946

EXPIRATION DATE: *RENEWAL

ISSUED TO: CONOCOPHILLIPS COMPANY

THE GREAT SEAL OF THE STATE OF UTAH
INDUSTRY
1847
1896

REFERENCE NUMBER(S), CLASSIFICATION(S) & DETAIL(S)
562960-0143 Corporation - Foreign - Profit
*RENEWAL

You will need to renew your registration each anniversary date of the effective date.
Exceptions: DBAs and Business Trusts renew every three (3) years from the effective date.

## Utah Well List as of 12/26/02

| API Well Number | Well Name | Well Type | Well Status | Sec | Twpn | Twpd | Rngn | Rngd |
|---|---|---|---|---|---|---|---|---|
| 43-007-30887-00-00 | ANDREEN 32-529 | Gas Well | APD | 32 | 14 | S | 10 | E |
| 43-007-30865-00-00 | COTNER 29-549 | Gas Well | APD | 29 | 14 | S | 10 | E |
| 43-007-30837-00-00 | DALLIN 32-615 | Gas Well | APD | 32 | 13 | S | 9 | E |
| 43-047-34551-00-00 | FED 43-24-3 #1 | Gas Well | APD | 24 | 10 | S | 17 | E |
| 43-047-33982-00-00 | FEDERAL 12-17 #1 | Gas Well | APD | 17 | 10 | S | 18 | E |
| 43-047-34471-00-00 | FEDERAL 12-29-7 1 | Gas Well | APD | 29 | 9 | S | 19 | E |
| 43-047-34472-00-00 | FEDERAL 31-31-6 1 | Gas Well | APD | 31 | 9 | S | 19 | E |
| 43-007-30864-00-00 | MCKENDRICK 29-548 | Gas Well | APD | 29 | 14 | S | 10 | E |
| 43-015-30512-00-00 | PPCO 19-379 | Gas Well | APD | 19 | 16 | S | 9 | E |
| 43-015-30515-00-00 | PPCO 24-562 | Gas Well | APD | 24 | 16 | S | 8 | E |
| 43-015-30548-00-00 | PPCO 30-605 | Gas Well | APD | 30 | 16 | S | 9 | E |
| 43-007-30888-00-00 | PRICE 32-438 | Gas Well | APD | 32 | 14 | S | 10 | E |
| 43-007-30813-00-00 | RITZAKIS 33-514 | Gas Well | APD | 33 | 13 | S | 9 | E |
| 43-007-30766-00-00 | RITZAKIS 33-516 | Gas Well | APD | 33 | 13 | S | 9 | E |
| 43-007-30838-00-00 | ROWLEY 32-616 | Gas Well | APD | 32 | 13 | S | 9 | E |
| 43-007-30863-00-00 | SCHMIDT 29-531 | Gas Well | APD | 29 | 14 | S | 10 | E |
| 43-007-30797-00-00 | SEELY 15-498 | Gas Well | APD | 15 | 14 | S | 8 | E |
| 43-007-30798-00-00 | SEELY 15-499 | Gas Well | APD | 15 | 14 | S | 8 | E |
| 43-007-30799-00-00 | SEELY 15-500 | Gas Well | APD | 15 | 14 | S | 8 | E |
| 43-007-30796-00-00 | SEELY 22-492 | Gas Well | APD | 22 | 14 | S | 8 | E |
| 43-007-30801-00-00 | SEELY 22-502 | Gas Well | APD | 22 | 14 | S | 8 | E |
| 43-007-30802-00-00 | SEELY 22-503 | Gas Well | APD | 22 | 14 | S | 8 | E |
| 43-007-30711-00-00 | USA 09-452 | Gas Well | APD | 9 | 15 | S | 8 | E |
| 43-015-30351-00-00 | USA 11-313 | Gas Well | APD | 11 | 16 | S | 9 | E |
| 43-015-30398-00-00 | USA 12-385 | Gas Well | APD | 12 | 16 | S | 9 | E |
| 43-015-30409-00-00 | USA 12-426 | Gas Well | APD | 12 | 16 | S | 9 | E |
| 43-007-30805-00-00 | USA 14-490 | Gas Well | APD | 14 | 14 | S | 8 | E |
| 43-007-30806-00-00 | USA 14-491 | Gas Well | APD | 14 | 14 | S | 8 | E |
| 43-007-30676-00-00 | USA 15-421 | Gas Well | APD | 15 | 15 | S | 8 | E |
| 43-015-30417-00-00 | USA 21-427 | Gas Well | APD | 21 | 16 | S | 9 | E |
| 43-015-30416-00-00 | USA 21-428 | Gas Well | APD | 21 | 16 | S | 9 | E |
| 43-015-30415-00-00 | USA 21-429 | Gas Well | APD | 21 | 16 | S | 9 | E |
| 43-007-30515-00-00 | USA 31-309 | Gas Well | APD | 31 | 15 | S | 10 | E |
| 43-007-30835-00-00 | USA 33-515 | Gas Well | APD | 33 | 13 | S | 9 | E |
| 43-007-30836-00-00 | USA 33-624 | Gas Well | APD | 33 | 13 | S | 9 | E |
| 43-007-30803-00-00 | USA 34-518 | Gas Well | APD | 34 | 14 | S | 8 | E |
| 43-007-30478-00-00 | UTAH 05-224 | Gas Well | APD | 5 | 15 | S | 9 | E |
| 43-015-30411-00-00 | UTAH 16-365 | Gas Well | APD | 16 | 16 | S | 9 | E |
| 43-015-30412-00-00 | UTAH 16-366 | Gas Well | APD | 16 | 16 | S | 9 | E |
| 43-015-30413-00-00 | UTAH 16-430 | Gas Well | APD | 16 | 16 | S | 9 | E |
| 43-015-30299-00-00 | UTAH 18-374 | Gas Well | APD | 18 | 16 | S | 9 | E |
| 43-015-30420-00-00 | UTAH 19-377 | Gas Well | APD | 19 | 16 | S | 9 | E |
| 43-015-30492-00-00 | UTAH 19-378 | Gas Well | APD | 19 | 16 | S | 9 | E |
| 43-007-30891-00-00 | UTAH 19-533 | Gas Well | APD | 19 | 14 | S | 10 | E |
| 43-015-30414-00-00 | UTAH 20-381 | Gas Well | APD | 20 | 16 | S | 9 | E |
| 43-015-30421-00-00 | UTAH 20-382 | Gas Well | APD | 20 | 16 | S | 9 | E |
| 43-015-30518-00-00 | UTAH 25-576 | Gas Well | APD | 25 | 16 | S | 8 | E |
| 43-015-30539-00-00 | UTAH 25-578 | Gas Well | APD | 25 | 16 | S | 8 | E |
| 43-015-30540-00-00 | UTAH 25-579 | Gas Well | APD | 25 | 16 | S | 8 | E |
| 43-007-30817-00-00 | UTAH 25-618 | Gas Well | APD | 25 | 13 | S | 9 | E |
| 43-015-30543-00-00 | UTAH 26-582 | Gas Well | APD | 26 | 16 | S | 8 | E |
| 43-015-30547-00-00 | UTAH 29-608 | Gas Well | APD | 29 | 16 | S | 9 | E |
| 43-007-30889-00-00 | UTAH 32-128 | Gas Well | APD | 32 | 14 | S | 10 | E |
| 43-007-30814-00-00 | UTAH 35-506 | Gas Well | APD | 35 | 13 | S | 9 | E |

## Utah Well List as of 12/26/02

| API Well Number | Well Name | Well Type | Well Status | Sec | Twpn | Twpd | Rngn | Rngd |
|---|---|---|---|---|---|---|---|---|
| 43-047-33750-00-00 | FEDERAL 34-29 | Gas Well | P | 29 | 9 | S | 19 | E |
| 43-007-30782-00-00 | GAROFOLA 26-482 | Gas Well | P | 26 | 15 | S | 8 | E |
| 43-007-30335-00-00 | GIACOLETTO 11-113 | Gas Well | P | 11 | 14 | S | 9 | E |
| 43-007-30407-00-00 | GIACOLETTO 13-120 | Gas Well | P | 13 | 14 | S | 9 | E |
| 43-007-30345-00-00 | GIACOLETTO 14-121 | Gas Well | P | 14 | 14 | S | 9 | E |
| 43-007-30487-00-00 | HELPER & ASSOC 07-307 | Gas Well | P | 7 | 15 | S | 9 | E |
| 43-007-30459-00-00 | HELPER & ASSOC 18-236 | Gas Well | P | 18 | 15 | S | 9 | E |
| 43-007-30720-00-00 | HELPER & ASSOC 18-308 | Gas Well | P | 18 | 15 | S | 9 | E |
| 43-007-30412-00-00 | HELPER & ASSOC 8-232 | Gas Well | P | 8 | 15 | S | 9 | E |
| 43-007-30258-00-00 | HELPER & ASSOCIATES 7-84 | Gas Well | P | 7 | 15 | S | 9 | E |
| 43-007-30588-00-00 | JENSEN 16-132 | Gas Well | P | 16 | 15 | S | 10 | E |
| 43-007-30420-00-00 | KAKATSIDES 31-197 | Gas Well | P | 31 | 14 | S | 9 | E |
| 43-007-30296-00-00 | LDS 17-133 | Gas Well | P | 17 | 15 | S | 10 | E |
| 43-007-30323-00-00 | PAAR 16-146 | Gas Well | P | 16 | 14 | S | 9 | E |
| 43-047-34286-00-00 | PETES WASH 23-12 #1 | Gas Well | P | 12 | 10 | S | 17 | E |
| 43-007-30748-00-00 | PIERUCCI 25-461 | Gas Well | P | 25 | 15 | S | 8 | E |
| 43-007-30749-00-00 | PIERUCCI 25-462 | Gas Well | P | 25 | 15 | S | 8 | E |
| 43-007-30754-00-00 | PIERUCCI 26-463 | Gas Well | P | 26 | 15 | S | 8 | E |
| 43-007-30755-00-00 | PIERUCCI 26-464 | Gas Well | P | 26 | 15 | S | 8 | E |
| 43-007-30745-00-00 | PIERUCCI 26-481 | Gas Well | P | 26 | 15 | S | 8 | E |
| 43-007-30117-00-00 | PINNACLE PEAK 19-171 | Gas Well | P | 19 | 14 | S | 9 | E |
| 43-007-30845-00-00 | PMC 10-526 | Gas Well | P | 10 | 15 | S | 8 | E |
| 43-007-30282-00-00 | POWELL 19-104 | Gas Well | P | 19 | 15 | S | 10 | E |
| 43-007-30283-00-00 | POWELL 19-105 | Gas Well | P | 19 | 15 | S | 10 | E |
| 43-007-30346-00-00 | POWELL 30-173 | Gas Well | P | 30 | 15 | S | 10 | E |
| 43-015-30279-00-00 | PPCO 10-557 | Gas Well | P | 10 | 16 | S | 8 | E |
| 43-015-30494-00-00 | PPCO 15-555 | Gas Well | P | 15 | 16 | S | 8 | E |
| 43-007-30211-00-00 | PRETTYMAN 10-15-34 | Gas Well | P | 10 | 14 | S | 9 | E |
| 43-007-30340-00-00 | PRETTYMAN 11-114 | Gas Well | P | 11 | 14 | S | 9 | E |
| 43-007-30653-00-00 | RGC 21-331 | Gas Well | P | 21 | 15 | S | 9 | E |
| 43-007-30743-00-00 | RGC 21-332 | Gas Well | P | 21 | 15 | S | 9 | E |
| 43-007-30747-00-00 | RGC 25-460 | Gas Well | P | 25 | 15 | S | 8 | E |
| 43-007-30559-00-00 | RGC 28-318 | Gas Well | P | 28 | 15 | S | 9 | E |
| 43-007-30518-00-00 | RGC 28-319 | Gas Well | P | 28 | 15 | S | 9 | E |
| 43-007-30509-00-00 | RITZAKIS 03-408 | Gas Well | P | 3 | 14 | S | 9 | E |
| 43-007-30473-00-00 | RITZAKIS 5-304 | Gas Well | P | 5 | 14 | S | 9 | E |
| 43-007-30474-00-00 | RITZAKIS 5-305 | Gas Well | P | 5 | 14 | S | 9 | E |
| 43-007-30475-00-00 | RITZAKIS 8-298 | Gas Well | P | 8 | 14 | S | 9 | E |
| 43-007-30479-00-00 | RITZAKIS 8-299 | Gas Well | P | 8 | 14 | S | 9 | E |
| 43-007-30476-00-00 | RITZAKIS 8-300 | Gas Well | P | 8 | 14 | S | 9 | E |
| 43-007-30374-00-00 | ROBERTSON 32-127 | Gas Well | P | 32 | 14 | S | 10 | E |
| 43-007-30610-00-00 | SAMPINOS 16-131 | Gas Well | P | 16 | 15 | S | 10 | E |
| 43-007-30723-00-00 | SAMPINOS 16-454 | Gas Well | P | 16 | 15 | S | 10 | E |
| 43-007-30765-00-00 | SAMPINOS 16-521 | Gas Well | P | 16 | 15 | S | 10 | E |
| 43-007-30800-00-00 | SEELY 22-501 | Gas Well | P | 22 | 14 | S | 8 | E |
| 43-007-30130-00-00 | ST OF UT 25-9-1 | Gas Well | P | 25 | 14 | S | 9 | E |
| 43-007-30142-00-00 | ST OF UT 36-3-4 | Gas Well | P | 36 | 14 | S | 9 | E |
| 43-007-30116-00-00 | STELLA-HAMAKER 10-174 | Gas Well | P | 10 | 15 | S | 8 | E |
| 43-007-30746-00-00 | TABOR 23-468 | Gas Well | P | 23 | 15 | S | 8 | E |
| 43-007-30319-00-00 | TELONIS 15-142 | Gas Well | P | 15 | 14 | S | 9 | E |
| 43-007-30322-00-00 | TELONIS 16-145 | Gas Well | P | 16 | 14 | S | 9 | E |
| 43-007-30300-00-00 | TELONIS 19-150 | Gas Well | P | 19 | 14 | S | 9 | E |
| 43-007-30299-00-00 | TELONIS 19-151 | Gas Well | P | 19 | 14 | S | 9 | E |
| 43-007-30327-00-00 | TELONIS 20-152 | Gas Well | P | 20 | 14 | S | 9 | E |

Utah Well List as of 12/26/02

| API Well Number | Well Name | Well Type | Well Status | Sec | Twpn | Twpd | Rngn | Rngd |
|---|---|---|---|---|---|---|---|---|
| 43-007-30631-00-00 | USA 13-419 | Gas Well | P | 13 | 15 | S | 8 | E |
| 43-007-30707-00-00 | USA 13-447 | Gas Well | P | 13 | 14 | S | 8 | E |
| 43-007-30706-00-00 | USA 13-470 | Gas Well | P | 13 | 14 | S | 8 | E |
| 43-007-30789-00-00 | USA 13-474 | Gas Well | P | 13 | 14 | S | 8 | E |
| 43-007-30790-00-00 | USA 13-475 | Gas Well | P | 13 | 14 | S | 8 | E |
| 43-007-30568-00-00 | USA 13-91 | Gas Well | P | 13 | 14 | S | 9 | E |
| 43-007-30404-00-00 | USA 14-122 | Gas Well | P | 14 | 14 | S | 9 | E |
| 43-015-30418-00-00 | USA 1-425 | Gas Well | P | 1 | 16 | S | 9 | E |
| 43-007-30579-00-00 | USA 14-325 | Gas Well | P | 14 | 15 | S | 8 | E |
| 43-007-30634-00-00 | USA 14-386 | Gas Well | P | 14 | 15 | S | 8 | E |
| 43-007-30646-00-00 | USA 14-416 | Gas Well | P | 14 | 15 | S | 8 | E |
| 43-007-30647-00-00 | USA 14-417 | Gas Well | P | 14 | 15 | S | 8 | E |
| 43-007-30791-00-00 | USA 14-476 | Gas Well | P | 14 | 14 | S | 8 | E |
| 43-007-30792-00-00 | USA 14-477 | Gas Well | P | 14 | 14 | S | 8 | E |
| 43-007-30529-00-00 | USA 14-74 | Gas Well | P | 14 | 14 | S | 9 | E |
| 43-007-30263-00-00 | USA 14-75 | Gas Well | P | 14 | 14 | S | 9 | E |
| 43-007-30450-00-00 | USA 15-176 | Gas Well | P | 15 | 14 | S | 9 | E |
| 43-007-30423-00-00 | USA 15-177 | Gas Well | P | 15 | 14 | S | 9 | E |
| 43-007-30690-00-00 | USA 15-420 | Gas Well | P | 15 | 15 | S | 8 | E |
| 43-007-30691-00-00 | USA 15-422 | Gas Well | P | 15 | 15 | S | 8 | E |
| 43-007-30264-00-00 | USA 15-88 | Gas Well | P | 15 | 14 | S | 9 | E |
| 43-007-30422-00-00 | USA 17-179 | Gas Well | P | 17 | 14 | S | 9 | E |
| 43-007-30622-00-00 | USA 17-180A | Gas Well | P | 17 | 14 | S | 9 | E |
| 43-007-30618-00-00 | USA 18-181 | Gas Well | P | 18 | 14 | S | 9 | E |
| 43-007-30417-00-00 | USA 18-182 | Gas Well | P | 18 | 14 | S | 9 | E |
| 43-007-30619-00-00 | USA 18-435 | Gas Well | P | 18 | 14 | S | 9 | E |
| 43-007-30393-00-00 | USA 19-222 | Gas Well | P | 19 | 15 | S | 10 | E |
| 43-007-30392-00-00 | USA 19-73 | Gas Well | P | 19 | 15 | S | 10 | E |
| 43-007-30448-00-00 | USA 20-287 | Gas Well | P | 20 | 15 | S | 10 | E |
| 43-007-30451-00-00 | USA 20-288 | Gas Well | P | 20 | 15 | S | 10 | E |
| 43-007-30590-00-00 | USA 20-398 | Gas Well | P | 20 | 15 | S | 10 | E |
| 43-007-30591-00-00 | USA 20-399 | Gas Well | P | 20 | 15 | S | 10 | E |
| 43-007-30424-00-00 | USA 21-184 | Gas Well | P | 21 | 14 | S | 9 | E |
| 43-007-30425-00-00 | USA 21-35 | Gas Well | P | 21 | 14 | S | 9 | E |
| 43-007-30426-00-00 | USA 22-185 | Gas Well | P | 22 | 14 | S | 9 | E |
| 43-007-30477-00-00 | USA 22-186 | Gas Well | P | 22 | 14 | S | 9 | E |
| 43-007-30700-00-00 | USA 22-466 | Gas Well | P | 22 | 15 | S | 8 | E |
| 43-007-30611-00-00 | USA 23-423 | Gas Well | P | 23 | 14 | S | 8 | E |
| 43-007-30650-00-00 | USA 23-445 | Gas Well | P | 23 | 15 | S | 8 | E |
| 43-007-30704-00-00 | USA 23-451 | Gas Well | P | 23 | 15 | S | 8 | E |
| 43-007-30503-00-00 | USA 23-467 | Gas Well | P | 23 | 15 | S | 8 | E |
| 43-007-30793-00-00 | USA 23-478 | Gas Well | P | 23 | 14 | S | 8 | E |
| 43-007-30794-00-00 | USA 23-479 | Gas Well | P | 23 | 14 | S | 8 | E |
| 43-007-30795-00-00 | USA 23-480 | Gas Well | P | 23 | 14 | S | 8 | E |
| 43-007-30469-00-00 | USA 24-183 | Gas Well | P | 24 | 14 | S | 8 | E |
| 43-007-30612-00-00 | USA 24-387 | Gas Well | P | 24 | 14 | S | 8 | E |
| 43-007-30613-00-00 | USA 24-388 | Gas Well | P | 24 | 14 | S | 8 | E |
| 43-007-30651-00-00 | USA 24-443 | Gas Well | P | 24 | 15 | S | 8 | E |
| 43-007-30648-00-00 | USA 24-444 | Gas Well | P | 24 | 15 | S | 8 | E |
| 43-007-30708-00-00 | USA 24-446 | Gas Well | P | 24 | 14 | S | 8 | E |
| 43-007-30652-00-00 | USA 24-448 | Gas Well | P | 24 | 15 | S | 8 | E |
| 43-007-30705-00-00 | USA 24-449 | Gas Well | P | 24 | 15 | S | 8 | E |
| 43-007-30505-00-00 | USA 25-459 | Gas Well | P | 25 | 15 | S | 8 | E |
| 43-007-30614-00-00 | USA 26-393 | Gas Well | P | 26 | 14 | S | 8 | E |

Utah Well List as of 12/26/02

| API Well Number | Well Name | Well Type | Well Status | Sec | Twpn | Twpd | Rngn | Rngd |
|---|---|---|---|---|---|---|---|---|
| 43-007-30430-00-00 | UTAH 06-223 | Gas Well | P | 6 | 15 | S | 9 | E |
| 43-007-30562-00-00 | UTAH 06-330 | Gas Well | P | 6 | 15 | S | 9 | E |
| 43-007-30716-00-00 | UTAH 06-483 | Gas Well | P | 6 | 15 | S | 9 | E |
| 43-007-30409-00-00 | UTAH 07-234 | Gas Well | P | 7 | 15 | S | 9 | E |
| 43-007-30421-00-00 | UTAH 07-235 | Gas Well | P | 7 | 15 | S | 9 | E |
| 43-007-30411-00-00 | UTAH 08-231 | Gas Well | P | 8 | 15 | S | 9 | E |
| 43-007-30488-00-00 | UTAH 08-233 | Gas Well | P | 8 | 15 | S | 9 | E |
| 43-015-30464-00-00 | UTAH 08-354 | Gas Well | P | 8 | 16 | S | 9 | E |
| 43-015-30378-00-00 | UTAH 08-355 | Gas Well | P | 8 | 16 | S | 9 | E |
| 43-015-30379-00-00 | UTAH 08-356 | Gas Well | P | 8 | 16 | S | 9 | E |
| 43-015-30380-00-00 | UTAH 08-357 | Gas Well | P | 8 | 16 | S | 9 | E |
| 43-007-30449-00-00 | UTAH 09-227 | Gas Well | P | 9 | 15 | S | 9 | E |
| 43-007-30561-00-00 | UTAH 09-329 | Gas Well | P | 9 | 15 | S | 9 | E |
| 43-015-30300-00-00 | UTAH 09-358 | Gas Well | P | 9 | 16 | S | 9 | E |
| 43-015-30407-00-00 | UTAH 09-359 | Gas Well | P | 9 | 16 | S | 9 | E |
| 43-015-30397-00-00 | UTAH 09-360 | Gas Well | P | 9 | 16 | S | 9 | E |
| 43-015-30408-00-00 | UTAH 09-361 | Gas Well | P | 9 | 16 | S | 9 | E |
| 43-007-30580-00-00 | UTAH 09-412 | Gas Well | P | 9 | 15 | S | 10 | E |
| 43-007-30605-00-00 | UTAH 09-413 | Gas Well | P | 9 | 15 | S | 10 | E |
| 43-007-30657-00-00 | UTAH 09-450 | Gas Well | P | 9 | 15 | S | 10 | E |
| 43-007-30722-00-00 | UTAH 09-453 | Gas Well | P | 9 | 15 | S | 10 | E |
| 43-007-30302-00-00 | UTAH 10-01-36 | Gas Well | P | 10 | 15 | S | 9 | E |
| 43-007-30298-00-00 | UTAH 10-219 | Gas Well | P | 10 | 15 | S | 9 | E |
| 43-007-30432-00-00 | UTAH 10-220 | Gas Well | P | 10 | 15 | S | 9 | E |
| 43-007-30303-00-00 | UTAH 10-221 | Gas Well | P | 10 | 15 | S | 9 | E |
| 43-007-30228-00-00 | UTAH 11-50 | Gas Well | P | 11 | 15 | S | 9 | E |
| 43-007-30229-00-00 | UTAH 11-51 | Gas Well | P | 11 | 15 | S | 9 | E |
| 43-007-30230-00-00 | UTAH 11-52 | Gas Well | P | 11 | 15 | S | 9 | E |
| 43-007-30231-00-00 | UTAH 11-53 | Gas Well | P | 11 | 15 | S | 9 | E |
| 43-007-30467-00-00 | UTAH 1-209 | Gas Well | P | 1 | 15 | S | 8 | E |
| 43-007-30210-00-00 | UTAH 12-15-37 | Gas Well | P | 12 | 15 | S | 9 | E |
| 43-007-30232-00-00 | UTAH 12-54 | Gas Well | P | 12 | 15 | S | 9 | E |
| 43-007-30233-00-00 | UTAH 12-55 | Gas Well | P | 12 | 15 | S | 9 | E |
| 43-007-30234-00-00 | UTAH 12-56 | Gas Well | P | 12 | 15 | S | 9 | E |
| 43-015-30493-00-00 | UTAH 13-376 | Gas Well | P | 13 | 16 | S | 8 | E |
| 43-015-30301-00-00 | UTAH 13-550 | Gas Well | P | 13 | 16 | S | 8 | E |
| 43-007-30243-00-00 | UTAH 13-65 | Gas Well | P | 13 | 15 | S | 9 | E |
| 43-007-30244-00-00 | UTAH 13-66 | Gas Well | P | 13 | 15 | S | 9 | E |
| 43-007-30245-00-00 | UTAH 13-67 | Gas Well | P | 13 | 15 | S | 9 | E |
| 43-007-30246-00-00 | UTAH 13-68 | Gas Well | P | 13 | 15 | S | 9 | E |
| 43-007-30439-00-00 | UTAH 13-92 | Gas Well | P | 13 | 14 | S | 9 | E |
| 43-007-30220-00-00 | UTAH 1-42 | Gas Well | P | 1 | 15 | S | 9 | E |
| 43-007-30221-00-00 | UTAH 1-43 | Gas Well | P | 1 | 15 | S | 9 | E |
| 43-007-30222-00-00 | UTAH 1-44 | Gas Well | P | 1 | 15 | S | 9 | E |
| 43-007-30223-00-00 | UTAH 1-45 | Gas Well | P | 1 | 15 | S | 9 | E |
| 43-015-30330-00-00 | UTAH 14-551 | Gas Well | P | 14 | 16 | S | 8 | E |
| 43-015-30331-00-00 | UTAH 14-552 | Gas Well | P | 14 | 16 | S | 8 | E |
| 43-007-30239-00-00 | UTAH 14-61 | Gas Well | P | 14 | 15 | S | 9 | E |
| 43-007-30240-00-00 | UTAH 14-62 | Gas Well | P | 14 | 15 | S | 9 | E |
| 43-007-30241-00-00 | UTAH 14-63 | Gas Well | P | 14 | 15 | S | 9 | E |
| 43-007-30242-00-00 | UTAH 14-64 | Gas Well | P | 14 | 15 | S | 9 | E |
| 43-015-30334-00-00 | UTAH 15-553 | Gas Well | P | 15 | 16 | S | 8 | E |
| 43-007-30416-00-00 | UTAH 17-101 | Gas Well | P | 17 | 15 | S | 10 | E |
| 43-007-30277-00-00 | UTAH 17-102 | Gas Well | P | 17 | 15 | S | 10 | E |

Utah Well List as of 12/26/02

| API Well Number | Well Name | Well Type | Well Status | Sec | Twpn | Twpd | Rngn | Rngd |
|---|---|---|---|---|---|---|---|---|
| 43-007-30255-00-00 | UTAH 24-80 | Gas Well | P | 24 | 15 | S | 9 | E |
| 43-007-30256-00-00 | UTAH 24-81 | Gas Well | P | 24 | 15 | S | 9 | E |
| 43-007-30267-00-00 | UTAH 24-86 | Gas Well | P | 24 | 15 | S | 9 | E |
| 43-007-30375-00-00 | UTAH 24-87 | Gas Well | P | 24 | 15 | S | 9 | E |
| 43-007-30227-00-00 | UTAH 2-49 | Gas Well | P | 2 | 15 | S | 9 | E |
| 43-007-30157-00-00 | UTAH 25-11-7 | Gas Well | P | 25 | 14 | S | 9 | E |
| 43-007-30399-00-00 | UTAH 25-134 | Gas Well | P | 25 | 15 | S | 9 | E |
| 43-007-30400-00-00 | UTAH 25-252 | Gas Well | P | 25 | 15 | S | 9 | E |
| 43-007-30401-00-00 | UTAH 25-253 | Gas Well | P | 25 | 15 | S | 9 | E |
| 43-007-30402-00-00 | UTAH 25-254 | Gas Well | P | 25 | 15 | S | 9 | E |
| 43-007-30600-00-00 | UTAH 25-389 | Gas Well | P | 25 | 14 | S | 8 | E |
| 43-007-30599-00-00 | UTAH 25-390 | Gas Well | P | 25 | 14 | S | 8 | E |
| 43-007-30658-00-00 | UTAH 25-391 | Gas Well | P | 25 | 14 | S | 8 | E |
| 43-007-30602-00-00 | UTAH 25-392 | Gas Well | P | 25 | 14 | S | 8 | E |
| 43-007-30206-00-00 | UTAH 25-4-33 | Gas Well | P | 25 | 14 | S | 9 | E |
| 43-015-30519-00-00 | UTAH 25-577 | Gas Well | P | 25 | 16 | S | 8 | E |
| 43-007-30156-00-00 | UTAH 25-7-6 | Gas Well | P | 25 | 14 | S | 9 | E |
| 43-007-30204-00-00 | UTAH 26-11-25 | Gas Well | P | 26 | 14 | S | 9 | E |
| 43-007-30205-00-00 | UTAH 26-1-23 | Gas Well | P | 26 | 14 | S | 9 | E |
| 43-007-30181-00-00 | UTAH 26-16-8 | Gas Well | P | 26 | 14 | S | 9 | E |
| 43-007-30446-00-00 | UTAH 26-255 | Gas Well | P | 26 | 15 | S | 9 | E |
| 43-007-30445-00-00 | UTAH 26-256 | Gas Well | P | 26 | 15 | S | 9 | E |
| 43-007-30444-00-00 | UTAH 26-257 | Gas Well | P | 26 | 15 | S | 9 | E |
| 43-007-30514-00-00 | UTAH 26-267 | Gas Well | P | 26 | 15 | S | 9 | E |
| 43-015-30541-00-00 | UTAH 26-580 | Gas Well | P | 26 | 16 | S | 8 | E |
| 43-015-30542-00-00 | UTAH 26-581 | Gas Well | P | 26 | 16 | S | 8 | E |
| 43-015-30544-00-00 | UTAH 26-583 | Gas Well | P | 26 | 16 | S | 8 | E |
| 43-007-30202-00-00 | UTAH 26-6-24 | Gas Well | P | 26 | 14 | S | 9 | E |
| 43-007-30395-00-00 | UTAH 27-187 | Gas Well | P | 27 | 14 | S | 9 | E |
| 43-007-30292-00-00 | UTAH 27-188 | Gas Well | P | 27 | 14 | S | 9 | E |
| 43-007-30457-00-00 | UTAH 27-268 | Gas Well | P | 27 | 15 | S | 9 | E |
| 43-007-30458-00-00 | UTAH 27-269 | Gas Well | P | 27 | 15 | S | 9 | E |
| 43-007-30712-00-00 | UTAH 27-457 | Gas Well | P | 27 | 14 | S | 8 | E |
| 43-007-30714-00-00 | UTAH 27-458 | Gas Well | P | 27 | 14 | S | 8 | E |
| 43-007-30777-00-00 | UTAH 27-520 | Gas Well | P | 27 | 14 | S | 8 | E |
| 43-015-30545-00-00 | UTAH 27-584 | Gas Well | P | 27 | 16 | S | 8 | E |
| 43-007-30193-00-00 | UTAH 27-8-29 | Gas Well | P | 27 | 14 | S | 9 | E |
| 43-007-30186-00-00 | UTAH 27-9-30 | Gas Well | P | 27 | 14 | S | 9 | E |
| 43-007-30396-00-00 | UTAH 28-189 | Gas Well | P | 28 | 14 | S | 9 | E |
| 43-007-30397-00-00 | UTAH 28-190 | Gas Well | P | 28 | 14 | S | 9 | E |
| 43-007-30293-00-00 | UTAH 28-191 | Gas Well | P | 28 | 14 | S | 9 | E |
| 43-007-30294-00-00 | UTAH 28-192 | Gas Well | P | 28 | 14 | S | 9 | E |
| 43-007-30551-00-00 | UTAH 28-320 | Gas Well | P | 28 | 15 | S | 9 | E |
| 43-007-30560-00-00 | UTAH 28-321 | Gas Well | P | 28 | 15 | S | 9 | E |
| 43-007-30405-00-00 | UTAH 29-193 | Gas Well | P | 29 | 14 | S | 9 | E |
| 43-007-30427-00-00 | UTAH 29-194 | Gas Well | P | 29 | 14 | S | 9 | E |
| 43-007-30739-00-00 | UTAH 29-339 | Gas Well | P | 29 | 15 | S | 9 | E |
| 43-007-30740-00-00 | UTAH 29-340 | Gas Well | P | 29 | 15 | S | 9 | E |
| 43-007-30741-00-00 | UTAH 29-341 | Gas Well | P | 29 | 15 | S | 9 | E |
| 43-007-30742-00-00 | UTAH 29-342 | Gas Well | P | 29 | 15 | S | 9 | E |
| 43-007-30262-00-00 | UTAH 30-125 | Gas Well | P | 30 | 14 | S | 10 | E |
| 43-007-30185-00-00 | UTAH 30-13-14 | Gas Well | P | 30 | 14 | S | 10 | E |
| 43-007-30265-00-00 | UTAH 30-195 | Gas Well | P | 30 | 14 | S | 9 | E |
| 43-007-30344-00-00 | UTAH 30-196 | Gas Well | P | 30 | 14 | S | 9 | E |

## Utah Well List as of 12/26/02

| API Well Number | Well Name | Well Type | Well Status | Sec | Twpn | Twpd | Rngn | Rngd |
|---|---|---|---|---|---|---|---|---|
| 43-007-30178-00-00 | UTAH 36-1-2 | Gas Well | P | 36 | 14 | S | 9 | E |
| 43-007-30341-00-00 | UTAH 36-135 | Gas Well | P | 36 | 15 | S | 9 | E |
| 43-007-30343-00-00 | UTAH 36-136 | Gas Well | P | 36 | 15 | S | 9 | E |
| 43-007-30342-00-00 | UTAH 36-137 | Gas Well | P | 36 | 15 | S | 9 | E |
| 43-007-30315-00-00 | UTAH 36-162 | Gas Well | P | 36 | 14 | S | 8 | E |
| 43-007-30316-00-00 | UTAH 36-163 | Gas Well | P | 36 | 14 | S | 8 | E |
| 43-007-30317-00-00 | UTAH 36-164 | Gas Well | P | 36 | 14 | S | 8 | E |
| 43-007-30318-00-00 | UTAH 36-165 | Gas Well | P | 36 | 14 | S | 8 | E |
| 43-007-30144-00-00 | UTAH 36-9-5 | Gas Well | P | 36 | 14 | S | 9 | E |
| 43-015-30341-00-00 | UTAH 4-280 | Gas Well | P | 4 | 16 | S | 9 | E |
| 43-015-30342-00-00 | UTAH 4-282 | Gas Well | P | 4 | 16 | S | 9 | E |
| 43-007-30384-00-00 | UTAH 5-205 | Gas Well | P | 5 | 15 | S | 9 | E |
| 43-007-30269-00-00 | UTAH 5-94 | Gas Well | P | 5 | 15 | S | 10 | E |
| 43-007-30270-00-00 | UTAH 5-95 | Gas Well | P | 5 | 15 | S | 10 | E |
| 43-007-30271-00-00 | UTAH 5-96 | Gas Well | P | 5 | 15 | S | 10 | E |
| 43-007-30217-00-00 | UTAH 6-38 | Gas Well | P | 6 | 15 | S | 10 | E |
| 43-007-30218-00-00 | UTAH 6-39 | Gas Well | P | 6 | 15 | S | 10 | E |
| 43-007-30219-00-00 | UTAH 6-40 | Gas Well | P | 6 | 15 | S | 10 | E |
| 43-007-30254-00-00 | UTAH 6-41 | Gas Well | P | 6 | 15 | S | 10 | E |
| 43-007-30235-00-00 | UTAH 7-57 | Gas Well | P | 7 | 15 | S | 10 | E |
| 43-007-30236-00-00 | UTAH 7-58 | Gas Well | P | 7 | 15 | S | 10 | E |
| 43-007-30237-00-00 | UTAH 7-59 | Gas Well | P | 7 | 15 | S | 10 | E |
| 43-007-30238-00-00 | UTAH 7-60 | Gas Well | P | 7 | 15 | S | 10 | E |
| 43-007-30275-00-00 | UTAH 8-100 | Gas Well | P | 8 | 15 | S | 10 | E |
| 43-007-30410-00-00 | UTAH 8-230 | Gas Well | P | 8 | 15 | S | 9 | E |
| 43-007-30272-00-00 | UTAH 8-97 | Gas Well | P | 8 | 15 | S | 10 | E |
| 43-007-30285-00-00 | UTAH 8-98X | Gas Well | P | 8 | 15 | S | 10 | E |
| 43-007-30274-00-00 | UTAH 8-99 | Gas Well | P | 8 | 15 | S | 10 | E |
| 43-007-30413-00-00 | UTAH 9-228 | Gas Well | P | 9 | 15 | S | 9 | E |
| 43-007-30414-00-00 | UTAH 9-229 | Gas Well | P | 9 | 15 | S | 9 | E |
| 43-007-30279-00-00 | WILLIAMS 30-78 | Gas Well | P | 30 | 14 | S | 10 | E |
| 43-007-30481-00-00 | WOOLSTENHULME 05-266 | Gas Well | P | 5 | 15 | S | 10 | E |
| 43-015-30250-00-00 | UTAH 16-110 | Gas Well | Shut_In | 16 | 16 | S | 9 | E |

# United States Department of the Interior

BUREAU OF LAND MANAGEMENT
Eastern States Office
7450 Boston Boulevard
Springfield, Virginia 22153

IN REPLY REFER TO
3106.8(932.34)WF

January 16, 2003

NOTICE

| | | |
|---|---|---|
| ConocoPhillips Company<br>P.O. Box 7500<br>Bartlesville, Oklahoma 74005 | :<br>:<br>: | Oil & Gas Leases |

Merger/Name Change Recognized

Acceptable evidence was received in this office on January 14, 2003, concerning the change of name of Phillips Petroleum Company to **ConocoPhillips Company** and the merger of **Conoco Incorporated** into **ConocoPhillips Company** on Federal oil and gas leases, with **ConocoPhillips Company being the surviving entity.**

The Secretary of the State of Delaware certified the effective date of this merger effective December 31, 2002.

The oil and gas lease files identified on the enclosed exhibit have been noted to the merger. The exhibit was compiled from a list of leases obtained from your list of leases. Eastern States has not abstracted the lease files to determine if the entities affected by this merger hold an interest in the leases identified nor have we attempted to identify leases where the entities are the operator on the ground maintaining no vested record title or operating rights interest. We are notifying the Minerals Management Service and all applicable Bureau of Land Management offices of this merger and name change by a copy of this notice. If additional documentation for changes of operator are required by our Field Offices, you will be contacted by them.

If you identify other leases in which the merging entity maintain an interest, please contact this office and we will appropriately document those files with a copy of this Notice.

By Operation of law the name of the principal on Nationwide Oil and Gas Bond held by Conoco Incorporated (ES0085) has been changed to ConocoPhillips Company.

If you have any questions, please contact Bill Forbes at 703-440-1536.

S/ Wilbert B. Forbes

Wilbert B. Forbes
Land Law Examiner
Branch of Use Authorization
Division of Resources Planning, Use
and Protection

bc: JFO, BLM State Offices, MMS, ES RF, 930 RF, ES-932:
Bforbes:wbf:01/16/03:440-1536/ConocoPhillips Co

Division of Oil, Gas and Mining

# OPERATOR CHANGE WORKSHEET

| ROUTING |
|---|
| 1. GLH |
| 2. CDW ✓ |
| 3. FILE |

Change of Operator (Well Sold) — Designation of Agent/Operator

Operator Name Change — X **Merger**

The operator of the well(s) listed below has changed, effective: **12-31-02**

| **FROM:** (Old Operator): | **TO:** ( New Operator): |
|---|---|
| PHILLIPS PETROLEUM COMPANY | CONOCOPHILLIPS COMPANY |
| Address: 980 PLAZA OFFICE | Address: P O BOX 2197, WL3 4066 |
| | |
| BARTLESVILLE, OK 74004 | HOUSTON, TX 77252 |
| Phone: 1-(918)-661-4415 | Phone: 1-(832)-486-2329 |
| Account No. N1475 | Account No. N2335 |

**CA No.** **Unit:** **DRUNKARDS WASH**

## WELL(S)

| NAME | SEC TWN RNG | API NO | ENTITY NO | LEASE TYPE | WELL TYPE | WELL STATUS |
|---|---|---|---|---|---|---|
| ST OF UT 36-3-4 | 36-14S-09E | 43-007-30142 | 11256 | STATE | GW | P |
| UTAH 36-9-5 | 36-14S-09E | 43-007-30144 | 11256 | STATE | GW | P |
| UTAH 36-1-2 | 36-14S-09E | 43-007-30178 | 11256 | STATE | GW | P |
| UTAH 36-11-11 | 36-14S-09E | 43-007-30184 | 11256 | STATE | GW | P |
| UTAH 18-93 | 18-14S-10E | 43-007-30587 | 11256 | STATE | GW | P |
| UTAH 19-14-12 | 19-14S-10E | 43-007-30182 | 11256 | STATE | GW | P |
| UTAH 19-77 | 19-14S-10E | 43-007-30252 | 11256 | STATE | GW | P |
| UTAH 30-13-14 | 30-14S-10E | 43-007-30185 | 11256 | STATE | GW | P |
| WILLIAMS 30-78 | 30-14S-10E | 43-007-30279 | 11256 | FEE | GW | P |
| UTAH 30-125 | 30-14S-10E | 43-007-30262 | 11256 | STATE | GW | P |
| UTAH 30-5-13 | 30-14S-10E | 43-007-30179 | 11256 | STATE | GW | P |
| UTAH 31-3-3 | 31-14S-10E | 43-007-30143 | 11256 | STATE | GW | P |
| UTAH 31-12-10 | 31-14S-10E | 43-007-30183 | 11256 | STATE | GW | P |
| UTAH 31-79 | 31-14S-10E | 43-007-30253 | 11256 | STATE | GW | P |
| UTAH 31-126 | 31-14S-10E | 43-007-30305 | 11256 | STATE | GW | P |
| ROBERTSON 32-127 | 32-14S-10E | 43-007-30374 | 11256 | FEE | GW | P |
| UTAH 01-208 | 01-15S-08E | 43-007-30464 | 11256 | STATE | GW | P |
| UTAH 01-247 | 01-15S-08E | 43-007-30465 | 11256 | STATE | GW | P |
| UTAH 01-209 | 01-15S-08E | 43-007-30467 | 11256 | STATE | GW | P |
| UTAH 01-246 | 01-15S-08E | 43-007-30566 | 11256 | STATE | GW | P |

## OPERATOR CHANGES DOCUMENTATION

**Enter date after each listed item is completed**

1. (R649-8-10) Sundry or legal documentation was received from the **FORMER** operator on: 01/08/2003
2. (R649-8-10) Sundry or legal documentation was received from the **NEW** operator on: 01/08/2003
3. The new company has been checked through the **Department of Commerce, Division of Corporations Database on:** 02/03/2003
4. Is the new operator registered in the State of Utah: YES Business Number: 562960-0143
5. If **NO**, the operator was contacted contacted on: _____

6. (R649-9-2)Waste Management Plan has been received on: IN PLACE

7. **Federal and Indian Lease Wells:** The BLM and or the BIA has approved the merger, name change, or operator change for all wells listed on Federal or Indian leases on: 01/14/2003

8. **Federal and Indian Units:**
The BLM or BIA has approved the successor of unit operator for wells listed on: 01/14/2003

9. **Federal and Indian Communization Agreements ("CA"):**
The BLM or BIA has approved the operator for all wells listed within a CA on: 01/14/2003

10. **Underground Injection Control ("UIC")** The Division has approved UIC Form 5, **Transfer of Authority to Inject,** for the enhanced/secondary recovery unit/project for the water disposal well(s) listed on: N/A

## DATA ENTRY:

1. Changes entered in the **Oil and Gas Database on:** 02/10/2003
2. Changes have been entered on the **Monthly Operator Change Spread Sheet on:** 02/10/2003
3. Bond information entered in RBDMS on: N/A
4. Fee wells attached to bond in RBDMS on: N/A

## STATE WELL(S) BOND VERIFICATION:

1. State well(s) covered by Bond Number: 8140-60-24

## FEDERAL WELL(S) BOND VERIFICATION:

1. Federal well(s) covered by Bond Number: 8015-16-69

## INDIAN WELL(S) BOND VERIFICATION:

1. Indian well(s) covered by Bond Number: N/A

## FEE WELL(S) BOND VERIFICATION:

1. (R649-3-1) The **NEW** operator of any fee well(s) listed covered by Bond Number 6196922
2. The **FORMER** operator has requested a release of liability from their bond on: N/A
The Division sent response by letter on: N/A

## LEASE INTEREST OWNER NOTIFICATION:

3. (R649-2-10) The **FORMER** operator of the fee wells has been contacted and informed by a letter from the Division of their responsibility to notify all interest owners of this change on: N/A

**COMMENTS:**