Form 3160-3
(December 1990)

SUBMIT IN TRIPLICATE*
(Other instructions on reverse side)

Form approved.
Budget Bureau No. 1004-0136
Expires: December 31, 1991

UNITED STATES
DEPARTMENT OF THE INTERIOR
BUREAU OF LAND MANAGEMENT

# APPLICATION FOR PERMIT TO DRILL OR DEEPEN

5. LEASE DESIGNATION AND SERIAL NO.: UTU-76334

6. IF INDIAN, ALLOTTEE OR TRIBE NAME: N/A

7. UNIT AGREEMENT NAME: N/A

8. FARM OR LEASE NAME, WELL NO.: USA 30-289

9. API WELL NO.:

10. FIELD AND POOL, OR WILDCAT: Undesignated

11. SEC., T., R., M., OR BLK. AND SURVEY OR AREA: NW/4, NE/4 Sec.30, T15S, R10E, SLB&M

12. COUNTY OR PARISH: CARBON

13. STATE: UTAH

1a. TYPE OF WORK: DRILL [X] DEEPEN [ ]

b. TYPE OF WELL: OIL WELL [ ] GAS WELL [X] OTHER SINGLE ZONE [X] MULTIPLE ZONE [ ]

2. NAME OF OPERATOR: RIVER GAS CORPORATION

3. ADDRESS AND TELEPHONE NO.: 1305 So. 100 E. Price, Utah 84501 (801) 637-8876

4. LOCATION OF WELL (Report location clearly and in accordance with any State requirements.*)
At surface: 1184' FNL, 1353' FEL
At proposed prod. zone: 361 413

CONFIDENTIAL

14. DISTANCE IN MILES AND DIRECTION FROM NEAREST TOWN OR POST OFFICE*: 7.2 miles west of Price, Utah

15. DISTANCE FROM PROPOSED* LOCATION TO NEAREST PROPERTY OR LEASE LINE, FT. (Also to nearest drlg. unit line, if any): 1184'

16. NO. OF ACRES IN LEASE: 1242.57 acres

17. NO. OF ACRES ASSIGNED TO THIS WELL: 160 acres

18. DISTANCE FROM PROPOSED LOCATION TO NEAREST WELL, DRILLING, COMPLETED, OR APPLIED FOR, ON THIS LEASE, FT.: 3000'

19. PROPOSED DEPTH: 2430'

20. ROTARY OR CABLE TOOLS: Rotary

21. ELEVATIONS (Show whether DF, RT, GR, etc.): 5799' GR

22. APPROX. DATE WORK WILL START*: August 1998

23. PROPOSED CASING AND CEMENTING PROGRAM

| SIZE OF HOLE | GRADE, SIZE OF CASING | WEIGHT PER FOOT | SETTING DEPTH | QUANTITY OF CEMENT |
|---|---|---|---|---|
| 14" | 12-3/4" | Conductor | 25' | |
| 11" | 8-5/8" | 24 #/ft | 243' | 108 sks.G+2%CaCl+1/4#per sack flocel |
| 7- 7/8" | 5-1/2" | 17 #/ft | 2430' | 236 sks 50/50 POZ+8%gel+2%CaCl+10%extender. 75 sks "G"thixotropic |

SEE ATTACHED

RECEIVED
JUN 12 1998
DIV. OF OIL, GAS & MINING

IN ABOVE SPACE DESCRIBE PROPOSED PROGRAM: If proposal is to deepen, give data present productive zone and proposed new productive zone. If proposal is to drill or deepen directionally, give pertinent data on subsurface locations and measured and true vertical depths. Give blowout preventer program, if any.

24.

SIGNED Don S. Hamilton TITLE Permit Specialist DATE June 11, 1998

(This space for Federal or State office use)

PERMIT NO. 43-007-30452 APPROVAL DATE

Federal Approval of this Action is Necessary

Application approval does not warrant or certify that the applicant holds legal or equitable title to those rights in the subject lease which would entitle the applicant to conduct operations thereon.
CONDITIONS OF APPROVAL, IF ANY:

BRADLEY G. HILL
RECLAMATION SPECIALIST III

APPROVED BY Bradley G. Hill TITLE DATE 6/23/98

***See Instructions On Reverse Side**

Title 18 U.S.C. Section 1001, makes it a crime for any person knowingly and willfully to make to any department or agency or the United States any false, fictitious or fraudulent statements or representations as to any matter within its jurisdiction.

# Range 10 East

Township 15 South

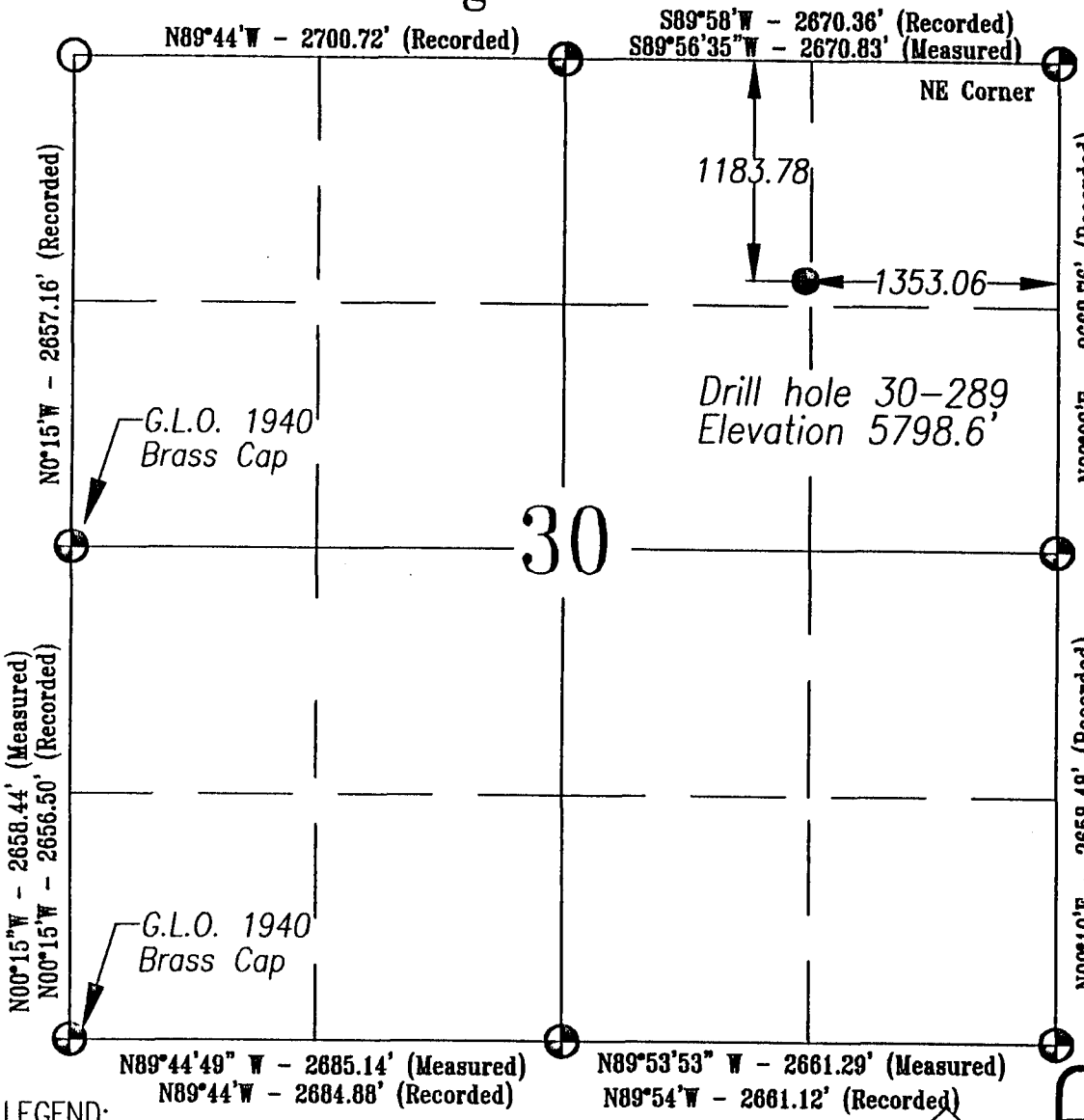


## Basis of Bearing:

*Basis of Bearing N00°15'W recorded between the West quarter Corner and the SW Corner of Section 30, Township 15 South, Range 10 East, Salt Lake Base and Meridian.*

## Basis Of Elevation:

*Basis of Elevation of 5898' as indicated in the SW corner of Section 30, Township 15 South, Range 10 East, Salt Lake Base and Meridian, as shown on the Elmo Quadrangle 7.5 Minute Series Map.*

## Description of Location:

*Proposed Drill Hole located in the North 1/2 NE 1/4 of Section 30; 1183.78' South and 1353.06' West from the NE corner of Section 30, T15S, R10E, Salt Lake Base & Meridian.*

## Surveyor's Certificate:

**I, Daniel W. Peatross, a Registered Licensed Land Surveyor, holding Certificate #259966, State of Utah, do hereby certify that the information on this drawing is true and accurate to the best of my knowledge and belief, and was conducted by myself, as shown hereon.**

Registered Land Surveyor
No. 259966
Daniel W. Peatross
State of Utah

Daniel W. Peatross
6-8-98

Exhibit "A"
1 of 3

LEGEND:

- Drill Hole Location
- Found Section corner monumented w/ Carbon County aluminum cap unless indicated otherwise.
- Section Corner (Searched, Not Found)

SCALE:
250' 0' 500' 1000'

| | |
|---|---|
| DRAWN BY: P. BOYLEN | Castle Valley Surveys<br>3266 South 125 West<br>Price, Utah 84501<br>(801) 637-9300<br>FAX (801) 637-2833 |
| CHECKED BY: L.W.J. | |
| DATE: 5/11/98 | |
| SCALE: 1"=1000' | |
| JOB NO. 276 | River Gas Corporation<br>Well# 30-289<br>Section 30, T15S, R10E, S.L.B.&M.<br>Carbon County, Utah |
| DRAWING NO. A-1 | |
| SHEET 1 OF 4 | |

Form 3160-5
(June 1990)

UNITED STATES
DEPARTMENT OF THE INTERIOR
BUREAU OF LAND MANAGEMENT

FORM APPROVED
Budget Bureau No. 1004-0135
Expires: March 31, 1993

## SUNDRY NOTICES AND REPORTS ON WELLS

Do not use this form for proposals to drill or to deepen or reentry to a different reservoir.
Use "APPLICATION FOR PERMIT--" for such proposals

*SUBMIT IN TRIPLICATE*

5. Lease Designation and Serial No.
UTU-76334

6. If Indian, Allottee or Tribe Name
N/A

7. If Unit or CA, Agreement Designation
N/A

1. Type of Well
☐ Oil Well ☒ Gas Well ☐ Other

8. Well Name and No.
USA 30-289

2. Name of Operator
River Gas Corporation

9. API Well No.

3. Address and Telephone No.
1305 South 100 East Price, Utah 84501 (801)637-8876

10. Field and Pool, or Exploratory Area
Undesignated

4. Location of Well (Footage, Sec.,T., R:, M., or Survey Description)
1184' FNL, 1353' FEL
NW/4, NE/4, Sec.30, T15S, R10E, SLB&M

11. County or Parish, State
Carbon County, Utah

12. **CHECK APPROPRIATE BOX(s) TO INDICATE NATURE OF NOTICE, REPORT, OR OTHER DATA**

| TYPE OF SUBMISSION | TYPE OF ACTION | |
|---|---|---|
| ☐ Notice of Intent | ☐ Abandonment | ☐ Change of Plans |
| ☐ Subsequent Report | ☐ Recompletion | ☐ New Construction |
| ☐ Final Abandonment Notice | ☐ Plugging Back | ☐ Non-Routine Fracturing |
| | ☐ Casing Repair | ☐ Water Shut-Off |
| | ☐ Altering | ☐ Conversion to Injection |
| | ☐ Other __ | ☐ Dispose Water |
| | | (Note: Report results of multiple completion on Well Completion or |

13. Describe Proposed or Completed Operations ( Clearly state all pertinent details, and give pertinent dates, including estimated date of starting any proposed work. If well is directionally drilled, give subsurface locations and measured and true vertical depths for all markers and zones pertinent to this work.)*

Request for exception to the state spacing rule based on Geology.

14. I hereby certify that the foregoing is true and correct

Signed Don S. Hamilton Title Permit Specialist Date 6/11/98

(This space for Federal or State office use)

Approved by _____ Title _____ Date _____
Conditions of approval, if any:

Title 18 U.S.C. Section 1001, makes it a crime for any person knowingly and willfully to make to any department or agency of the United States any false, fictitious or fraudulent statements or representations as to any matter within its jurisdiction.

*** See Instructions on Reverse Side**

RGC

COPY

RIVER GAS CORPORATION
UTAH OPERATIONS
1305 South 100 East
Price, Utah 84501
Bus. (435) 637-8876
FAX (435) 637-8924

CONFIDENTIAL

RECEIVED
JUN 12 1998
DIV. OF OIL, GAS & MINING

June 11, 1998

Mr. Eric Jones
Petroleum Engineer
Bureau of Land Management
82 E. Dogwood
Moab, Utah 84532

RE: Application for Permit to Drill-
USA 30-289, NW/4,NE/4, Sect.30
T15S, R10E, SLB & M, Carbon County, Utah

Dear Eric:

Enclosed is the original of the *Application for Permit to Drill* (APD) and a Sundry Notice (requesting exception to spacing) for the above named well. Included with the APD is the following information:

Exhibit "A"- Survey plat of the proposed well site;

Exhibit "B" - Proposed Location Map with Pipeline, Power, and Road Access;

Exhibit "C" - Drilling Site Layout;

Exhibit "D" - On-site Inspection Checklist;

Exhibit "E" - Production Site Layout;

Exhibit "F" - Typical Road Cross-section;

Exhibit "G" - BOP Diagram;

Exhibit "H" - Typical Wellhead Manifold;

Please accept this letter as River Gas Corporation's written request for confidential treatment of all information contained in and pertaining to this permit application, if said information is eligible for such consideration.

Thank you very much for your timely consideration of this application. Please feel free to contact me if you have any questions.

Sincerely,

Don S. Hamilton

Don S. Hamilton
Permit Specialist

cc: Mr. Don Stephens, BLM, Price, Utah
Mr. Chuck Snure, Texaco
Mr. R.A. Lamarre, Texaco
Mr. Gee Lake, Jr., Dominion Resources
Mr. John Baza, DOGM
Mrs. Tammie Butts, River Gas Corporation
RGC Well File

UT-060-3160-1
December, 1992

Bureau of Land Management
Moab District
Application for Permit to Drill
On-Site Inspection Checklist

Company River Gas Corporation Well No. 30-289

Location: Sec. 30, T 15 S, R 10 E, Lease No. UTU-76334

On-Site Inspection Date: 4-30-98

All operations will be conducted in such a manner that full compliance is made with applicable laws, regulations (43 CFR 3100), Onshore Oil and Gas Orders, the approved plan of operations and the conditions of approval. The operator is fully responsible for the actions of his subcontractors. A copy of these conditions will be furnished to the field representative to ensure compliance.

A. DRILLING PROGRAM

1. Surface Formation and Estimated Formation Tops:
   Surface formation: Upper Mancos Shale
   Estimated top of Ferron Formation: 1,550'

2. Estimated Depth at Which Oil, Gas, Water or Other Mineral Bearing Zones are Expected to be Encountered

| | Depth | Formation |
|---|---|---|
| Expected Oil Zones: none | | |
| Expected Gas Zones: Ferron Coal Interval: 1,570'-1,690' | | |
| Expected Water Zones: 1,570'-1,690' | | |
| Expected Mineral Zones: none | | |

All fresh water and prospectively valuable minerals encountered during drilling will be recorded by depth and will be cased and cemented. When possible, water flow rates will be measured and samples will be taken and analyzed. All oil and gas shows will be tested to determine commercial potential.

3. Pressure Control Equipment- include schematics of the BOP and choke manifold, and describe testing procedures: Quick Test is contracted to test the manifold, blind rams, and B.O.P to 2000 psi. Surface casing is tested to 1 psi/ft. See attachment.

   BOP systems will be consistent with API RP 53 and Onshore Oil and Gas Order No. 2, with variances previously granted. Pressure tests of the surface casing and all BOP equipment potentially subject to pressure will be conducted before drilling the surface casing shoe. Blowout preventer controls will be installed prior to drilling the surface casing shoe and will remain in use until the well is completed or abandoned. Ram preventers shall be inspected and operated each trip (no more than once a day is necessary), and annular preventers shall be inspected and operated weekly to ensure good mechanical working order. These inspections shall be recorded in the drilling log and in the daily drilling report.

4. Casing Program and Auxiliary Equipment - include casing size, weight, grade, thread and coupling, setting depth and condition (new or acceptably reconditioned): Approximately 2430' of 5 ½", 17#/ft,N-80, LT&C production casing will be installed approximately 10% of the above setting depth will be 8 5/8", 24#/ft J-55 surface casing.

5. Cement-include the cement type, density, yield, additives and amount used in setting each casing string. Also include the anticipated cement fill-up. If stage cementing, describe techniques: See cement design.

6. Mud Program and Circulating Medium- include mud components and weights. When air drilling, also include: length and location of blooie line; description of the auto ignitor; description of the deduster equipment; and amounts, types and characteristics of stand-by mud: Hole will be drilled with air.

7. Coring, Logging and Testing Program: Bulk Density, Gamma, Neutron Density, Resistivity and Caliper logs will be ran.
Initial opening of drill stem test tools will be restricted to daylight hours.

8. Abnormal Conditions, Bottom Hole Pressures and Potential Hazards- include anticipated bottomhole pressure and/or pressure gradient: No abnormal conditions are anticipated. Formation is slightly over-pressured. Estimated BHP: 1420 psi.

9. Any Other Aspects of this Proposal that should be Addressed:

B. THIRTEEN POINT SURFACE USE PLAN

The dirt contractor will be provided with an approved copy of the surface use plan of operations before initiating construction.

1. Existing Roads:

   a. Proposed route to location (submit a map depicting access and well location).

   b. Location of proposed well in relation to town or other reference point: 7.2 miles south of Price, Ut.

   c. Contact the County Road Department for use of county roads. The use of San Juan County roads will require an encroachment permit from the San Juan Road Department.

   d. Plans for improvement and/or maintenance of existing roads:

   e. Other:

2. Planned Access Roads:

   a. Location (centerline): Off of proposed USA 30-289 approx:1560'FSL,700'FWL

   b. Length of new access top be constructed: 100'

   c. Length of existing roads to be upgraded: 4000'

   d. Maximum total disturbed width: 60'

   e. Maximum travel surface width: 25'

f. Maximum grades: 4%

g. Turnouts: N/A

h. Surface materials: In-place residual of Mancos Shale

i. Drainage (crowning, ditching, culverts, etc): Roads will be crowned with bar ditches on both sides & 2 culverts placed along new road.

j. Cattleguards: N/A

k. Length of new and/or existing roads which lie outside the lease boundary for which a BLM right-of-way is required: N/A

l. Other:

Surface disturbance and vehicular travel will be limited to the approved location access road. Any additional area needed must be approved by the Area Manager advance.

If a right-a-way is necessary, no surface disturbing activities shall take place on the subject right-of-way until the associated APD is approved. The holder will adhere to conditions of approval in the Surface Use Program of the approved APD, relevant to any right-of-way facilities.

If a right-of-way is secured, boundary adjustments in the lease or unit shall automatically amend this right-of-way to include that portion of the facility no longer contained within the lease or unit. In the event of an automatic amendment to this right-of-way grant, the prioron-lease/unit conditions of approval of this facility will not be affected even though they would now apply to facilities outside of the lease/unit as a result of a boundary adjustment. Rental fees, if appropriate shall be recalculated based on the conditions of this grant and the regulations in effect at the time of an automatic amendment.

If the well is productive, the access road will be rehabilitated or brought to Resource (Class III) Road Standards within 60 days of dismantling the rig. If upgraded, the access road must be maintained at these standards until the well is properly abandoned. If this time frame cannot be met, the Area Manager will be notified so that temporary drainage control can be installed along the access road.

3. Location of Existing Wells-on a map, show the location of all water, injection, disposal, producing and drilling wells within a one mile radius of the proposed well, and describe the status of each: See Attachment "B"

4. Location of Production Facilities:

a. On-site facilities: See Attachment "E"

b. Off-site facilities: none

c. Pipelines: N/A

All permanent (in place for six months or longer) structures constructed or installed (including oil well pump jacks) will be painted a flat, nonreflective color to match the standard environmental colors, as determined by the Rocky Mountain Five-State Interagency

Committee. All facilities will be painted within six months of installation. Facilities required by comply with the Occupational Safety and Health Act (OSHA) may be excluded. Colors will be as follows:tan

All site security guidelines identified in 43 CFR § 3163.7-5 and Onshore Oil and Gas Order No. 3 Colors will be as follows: tan

If a gas meter run is constructed, it will be located on lease within 500 feet of the wellhead. The gas flowline will be buried from the wellhead to the meter and will be buried downstream of the meter until it leaves the pad. Meter runs will be housed and/or fenced. The gas meter shall be calibrated prior to first sales and shall be calibrated quarterly thereafter. All gas production and measurement shall comply with the provisions of 43 CFR § 3162. 7-3, Onshore Oil and Gas Order No. 5, and American Gas Association (AGA) Report No. 3.

If a tank battery is constructed on this lease, it will be surrounded by a dike of sufficient capacity to contain 1 ½ times the storage capacity of the largest tank. All loading lines and valves will be placed inside the berm surrounding the tank battery. All oil production and measurement shall conform to the provisions of 43 CFR § 3162.7-3 and Onshore Oil and Gas Order No. 4

Production facilities on location may include a lined or unlined produced water pit as specified in NTL-2B. If water is produced from the well, an NTL-2B application must be submitted.

5. Location and Type of Water Supply:

All water needed for drilling purposes will be obtained from (describe location and/or show on a map): PRWID

6. Source of Construction Material:

Pad construction material will be obtained from (if the source is Federally owned, show location on a map): Private owner in East Price
The use of materials under BLM jurisdiction will conform to 43 CFR 3610.2-3.

7. Methods of Handling Waste Disposal:

Describe the methods and locations proposed for safe containment and disposal of waste material, e.g. cuttings, produced water, garbage, sewage, chemicals, etc.

The reserve pit will be lined with (native material, bentonite, synthetic material): Pit will be lined with native material unless designated otherwise by BLM officers prior to construction.

The reserve pit will be located: on the northwest end of the location,and the pit walls will be sloped at no greater than 2to 1.

The reserve pit shall be located in cut material, with at least 50% of the pit volume being below original ground level. Three sides of the reserve pit will be fenced before drilling starts. The fourth side will be fenced as soon as drilling is completed, and shall remain until the pit is dry. As soon as the reserve pit has dried, all areas not needed for production will be rehabilitated.

Trash must be contained in a trash cage and hauled away to an approved disposal site as necessary but no later than at the completion of drilling operations.

8. Ancillary Facilities: Garbage Containers and Portable Toilets

9. Well Site Layout - depict the pit, rig, cut and fill, topsoil, etc. on a plat with a scale of at least 1" = 50'.

All well, whether drilling, producing, suspended, or abandoned, will be identified in accordance with 43 CFR 3162.6.

Access to the well pad will be from: South

The blooie line will be located: on the northwest,at least 100 feet from the well head.

To minimize the amount of fugitive dust and spray escaping from the blooie pit, the following blooie line deflection method will be employed: Water Injection.

10. Plans for Restoration of the Surface:

The top 6 inches of topsoil material will be removed from the location and stockpiled separately on: Adjacent land.

Topsoil along the access road will be reserved in place adjacent to the road.

Immediately upon completion of drilling, all equipment that is not necessary for production shall removed.

The reserve pit and that portion of the location not needed for production will be reclaimed.

Before any dirt work to restore the location takes place, the reserve pit must be completely dry.

Reclaimed roads will have the berms and cuts reduced and will be closed to vehicle use.

All disturbed areas will be recontoured to replicate the natural slope.

The stockpiled topsoil will be evenly distributed over the disturbed area.

Prior to reseeding, all disturbed areas, including the access roads, will be scarified and left with a rough surface.

Seed will be broadcast or drilled between Sept. and Nov., or at a time specified by the BLM. If broadcast, a harrow or some other implement will be dragged over the seeded area to assure seed coverage.

The following seed mixture will be used:

BLM-recommended mixture.

The abandonment marker will be one of the following, as specified by BLM:

1) at least four feet above ground level,
2) at restored ground level, or

3) below ground level.

In any case the marker shall be inscribed with the following: operator name, lease number, well name and surveyed description (township, range, section and either quarter-quarter or footages).

Additional requirements:

11. Surface and Mineral Ownership: BLM

12. Other Information:

a. Archeological Concerns: None that RGC is aware of.

The operator is responsible for informing all persons in the area who are associated with this project that they will be subject to prosecution for knowingly disturbing historic or archaeological sites, or for collecting artifacts. If historic or archaeological materials are uncovered during construction, the operator is to immediately stop work that might further disturb such materials, and contact the authorized officer (AO). Within five (5) working days, the AO will inform the operator as to:

- whether the materials appear eligible for the National Register of Historic Places;

- the mitigation measures the operator will likely have to undertake before the site can be used (assuming in situ preservation is not necessary); and

- a time frame for the AO to complete an expedited review under 36 CFR 800.11 to confirm, through the State Historic Preservation Officer, that the findings of the AO are correct and that mitigation is appropriate.

If the operator wishes, at any time, to relocate activities to avoid the expense of mitigation and/or the delays associated with this process, the AO will assume responsibility for whatever recordation and stabilization of the exposed materials may be required. Otherwise, the operator will be responsible for mitigation costs. The AO will provide technical and procedural guidelines for the conduct of mitigation. Upon verification from the AO that the required mitigation has been completed, the operator will then be allowed to resume construction.

b. Threatened and Endangered Species Concerns: No

c. Wildlife Seasonal Restrictions (yes/no): See EIS

d. Off Location Geophysical Testing: N/A

e. Drainage crossings that require additional State or Federal approval: N/A

f. Other: N/A

13. Lessee's or Operator's Representative and Certification

Representative:

Name: Don S. Hamilton

Title: Permitting Specialist

Address: 1305 South 100 East
Price, Utah 84501

Phone No: (435)637-8876

Certification:

I hereby certify that I, or persons under my direct supervision, have inspected the proposed drill site and access route; that I am familiar with the conditions which currently exists; that the statements make in this APD package are, to the best of my knowledge, true and correct; and that the work associated with the operations proposed herein will be performed by RGC and its contractors and subcontractors in conformity with this APD package and the terms and conditions under which it is approved. I also certify responsibility for the operations conducted on that portion of the leased lands associated with this application, with bond coverage being provided under BLM bond no. S304604. This statement is subject to the provisions of 18 U.S.C. 1001 for the filing of a false statement.

Don Hamilton
Signature

Permit Specialist
Title

June 10, 1998
Date

## C. REQUIRED APPROVALS, REPORTS AND NOTIFICATIONS

Required verbal notifications are summarized in Table 1, attached.

Building Location- Contact the Resource Area, Natural Resource Protection Specialist at least 24 hours prior to commencing construction of location.

Spud- The spud date will be reported to the Resource Area Office 24 hours prior to spudding. Written notification in the form of a Sundry Notice (Form 3160-5) will be submitted the District Office within 24 hours after spudding, regardless of whether spud was made with a dry hole digger or big rig.

Daily Drilling Reports- Daily drilling reports shall detail the progress and status of the well and shall be submitted to the District Office on a weekly basis.

Monthly Reports of Operations- In accordance with Onshore Oil and Gas Order No. 1, this well shall be reported on Minerals Management Service (MMS) Form 3160, "Monthly Report of Operations," starting the month in which operations commence and continuing each month until the well is physically plugged and abandoned. This report will be filed directly with MMS.

Sundry Notices- There will be no deviation from the proposed drilling and/or workover program without prior approval from the Assistant District Manager. "Sundry Notices and Reports on Wells: (Form 3160-5) will be filed for approval for all changes of plans and other operations in accordance with 43 CFR 3162.3-2. Safe drilling and operating practices must be observed.

Drilling Suspensions- Operations authorized by this permit shall not be suspended for more than 30 days without prior approval of the Authorized Officer. All conditions of this approval shall be applicable during any operations conducted with a replacement rig.

Undesirable Events- Spills, blowouts, fires, leaks, accidents, or any other unusual occurrences shall be immediately reported to the Resource Area in accordance with requirements of NTL-3A.

Cultural Resources- If cultural resources are discovered during construction, work that might disturb the resources is to stop, and the Area Manager is to be notified.

First Production- Should the well be successfully completed for production, the Assistant District Manager, Minerals Division will be notified when the well is placed in producing status. Such notification may be made by phone, but must be followed by a sundry notice or letter not later than five (5) business days following the date on which the well is placed into production.

A first production conference will be scheduled as soon as the productivity of the well is apparent. This conference should be coordinated through the Resource Area Office. The Resource Area Office shall be notified prior to the first sale.

Well Completion Report- Whether the well is completed as a dry hole or as a producer, "Well Completion and Recompletion Report and Log" (Form 3160-4) will be submitted to the District Office not later than thirty (30) days after completion of the well or after completion of operations being performed, in accordance with 43 CFR 3162.4-1. Two copies of all logs, core descriptions, core analysis, well test data, geologic summaries, sample description, and all other surveys or data obtained and compiled during the drilling, workover, and/or completion operations, will be filed with Form 3160-4. Samples (cuttings and/or samples) will be submitted when requested by the Assistant District Manager.

Venting/Flaring of Gas-NTL-4A allows venting/flaring of gas during the initial well evaluation period not to exceed 30 days or 50 MMcf. Venting/flaring beyond the initial test period threshold must be approved by the District Office.

Produced Water- Produced waste water may be confined to an unlined pit for a period not to exceed 90 days after initial production. During the 90 day period, an application for approval of a permanent disposal method and location, along with the required water anlysis, will be submitted to the Assistant District Manager for approval pursuant to NTL-2B.

Off-Lease Measurement, Storage, Commingling- Prior approval must be obtained from the Assistant District Manager for off-lease measurement, off-lease storage and/or commingling (either down-hole or at the surface).

Plugging and Abandonment- If the well is completed as a dry hole, plugging instructions must be obtained from the BLM, Moab District Office prior to initiating plugging operations. Table 1 of this document provides the after-hours phone numbers of personnel who are authorized to give plugging instructions.

A "Subsequent Report of Abandonment" (Form 3160-5) will be filed with the Assistant District Manager, Minerals Divisions within thirty (30) days following completion of the well for abandonment. This report will indicate where plugs were placed and the current status of surface restoration. Upon completion of approved plugging, a regulation marker will be erected in accordance with 43 CFR 3162.6. Final abandonment will not be approved until the surface reclamation work required by the approved APD or approved abandonment notice has been completed to the satisfaction of the Area Manager or his representative, or the appropriate surface managing agency.

TABLE 1
NOTIFICATIONS

Notify Don Stephens of the Price Resource Area, at (435)636-3608 for the following:

2 days prior to commencement of dirt work, construction or reclamation;

1 day prior to spudding;

50 feet prior to reaching surface and intermediate casing depths;

3 hours prior to testing BOPE;

12 hours prior to reaching kickoff point depth (if applicable).

If the person at the above number cannot be reached, notify the Moab District Office at (435) 259-6111. If unsuccessful, notify one of the people listed below.

Well abandonment operations require 24 hour advance notice and prior approval. In the case of newly drilled dry holes, verbal approval can be obtained by calling the Moab District Office, Branch of Fluid Minerals at (435) 259-6111. If approval is needed after work hours, you may contact the following:

| | |
|---|---|
| Eric Jones, Petroleum Engineer | Office: (435) 259-6111<br>Home: (435) 259-2214 |

If unable to reach the above individuals, please call:

| | |
|---|---|
| Lynn Jackson,<br>Chief, Branch of Fluid Minerals | Office: (435) 259-6111<br>Home: (435) 259-7990 |

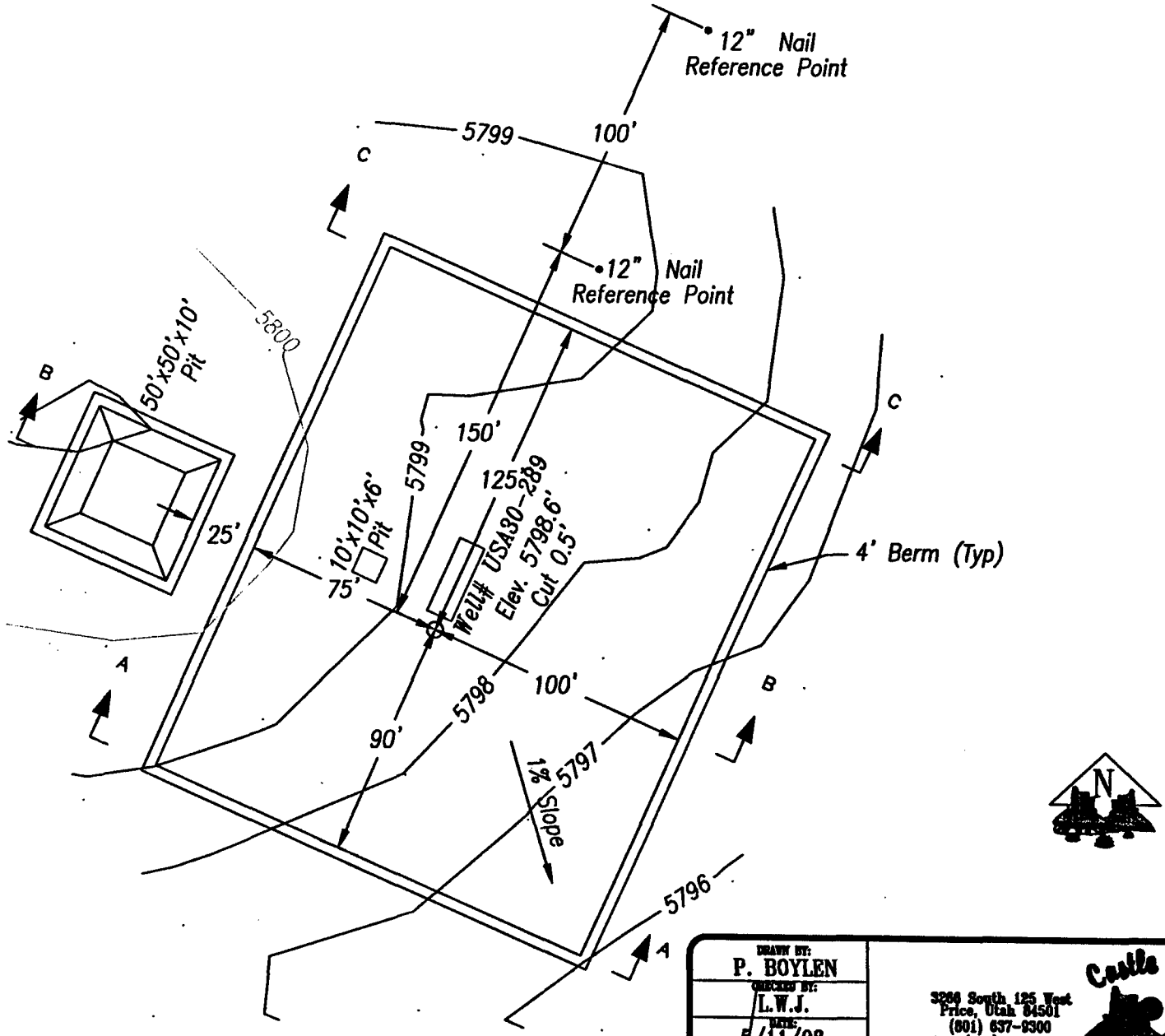


*Elevation Ungraded Ground at Location Stake = 5798.6'*
*Elevation Graded Ground at Location Stake =5798.1'*

Existing Road

| | |
|---|---|
| DRAWN BY: P. BOYLEN | Castle Valley Services<br>3286 South 125 West<br>Price, Utah 84501<br>(801) 637-9300<br>FAX (801) 637-2833 |
| CHECKED BY: L.W.J. | |
| DATE: 5/11/98 | |
| SCALE: 1"=60' | |
| JOB NO. 276 | River Gas Corporation<br>Location Layout<br>Section 30, T15S, R10E, S.L.B.&M.<br>Well# 30-289 |
| DRAWING NO. A-2 | |
| SHEET 2 OF 4 | |

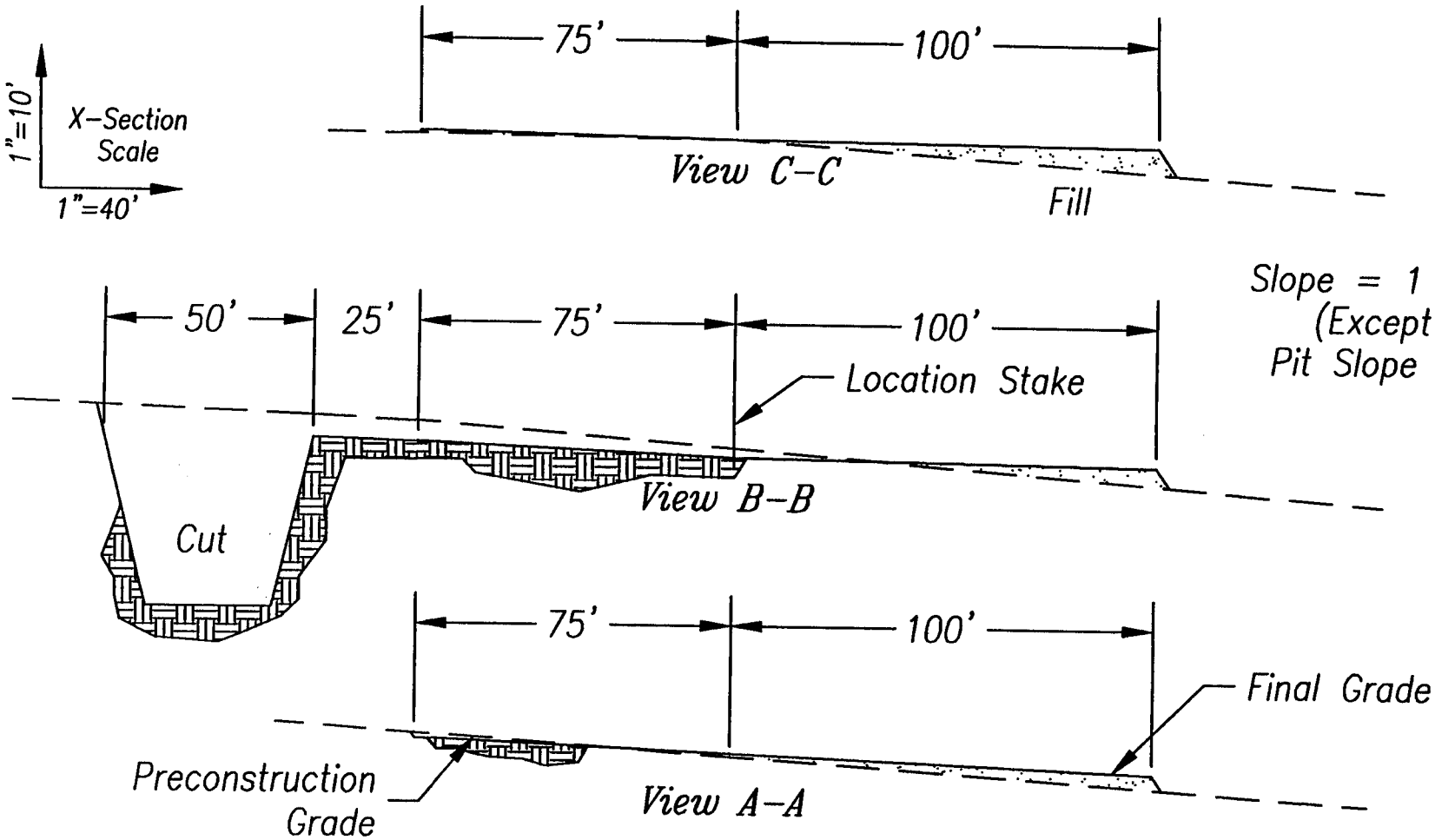


Exhibit "A"
3 of 3

## APPROXIMATE YARDAGES

| | |
|---|---|
| CUT | |
| (6") Topsoil Stripping | = 750.0 Cu. Yds. |
| Remaining Location | = 705.7 Cu. Yds. |
| TOTAL CUT | = 1,455.7 Cu. Yds. |
| TOTAL FILL | = 461.0 Cu. Yds. |

| | |
|---|---|
| DRAWN BY: P. BOYLEN | Castle Valley Services<br>3266 South 125 West<br>Price, Utah 84501<br>(801) 637-9300<br>FAX (801) 637-2833 |
| CHECKED BY: L.W.J. | |
| DATE: 5/11/98 | |
| SCALE: As Shown | |
| JOB NO. 276 | River Gas Corporation<br>Typical Cross Sections<br>Section 30, T15S, R10E, S.L.B.&M.<br>Well# 30-289 |
| DRAWING NO. C-1 | |
| SHEET 3 OF 4 | |

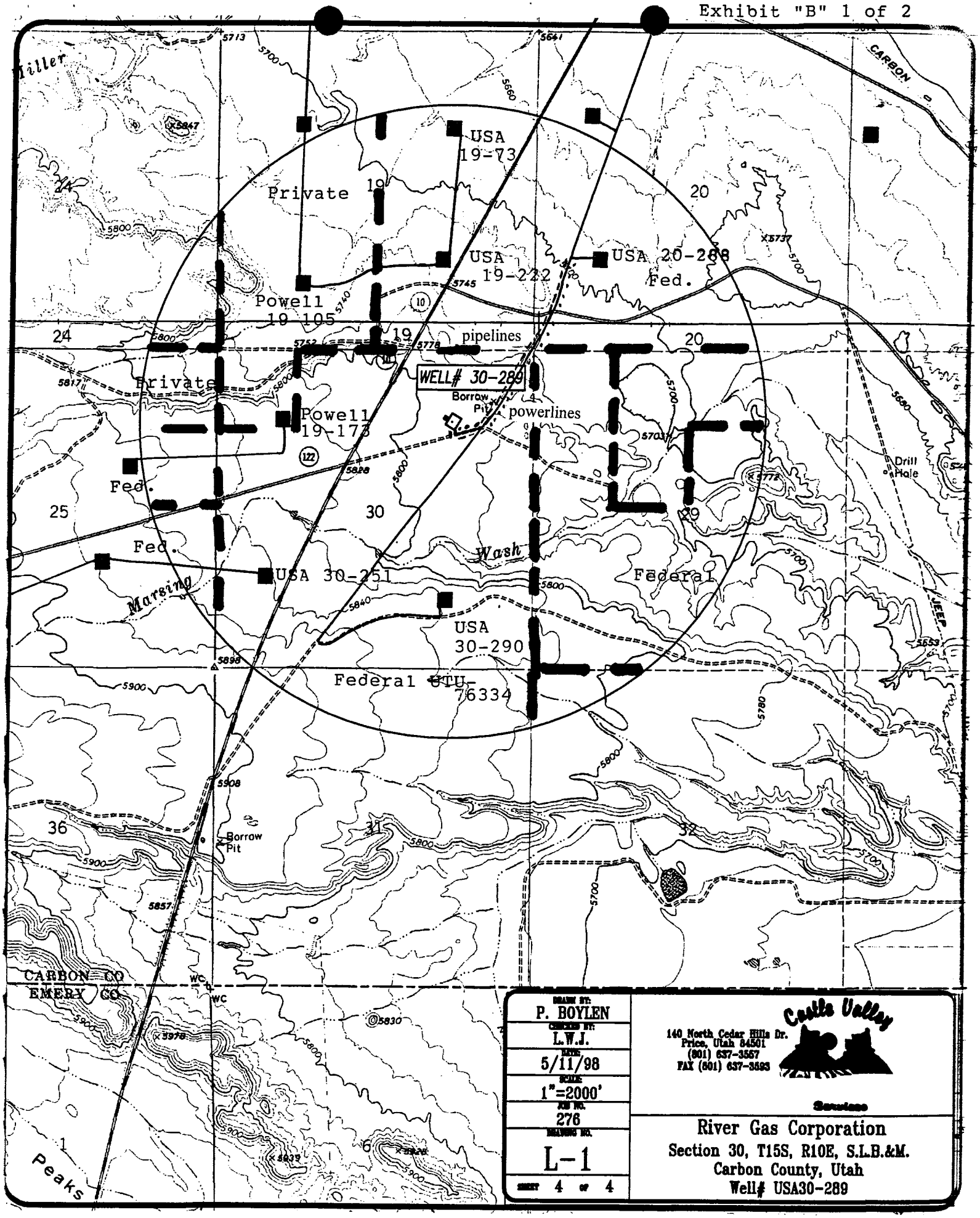


| | |
|---|---|
| DRAWN BY: P. BOYLEN | Castle Valley<br>140 North Cedar Hills Dr.<br>Price, Utah 84501<br>(801) 637-3567<br>FAX (801) 637-3593<br>Services |
| CHECKED BY: L.W.J. | River Gas Corporation |
| DATE: 5/11/98 | Section 30, T15S, R10E, S.L.B.&M. |
| SCALE: 1"=2000' | Carbon County, Utah |
| JOB NO. 276 | Well# USA30-289 |
| DRAWING NO. L-1 | |
| SHEET 4 OF 4 | |

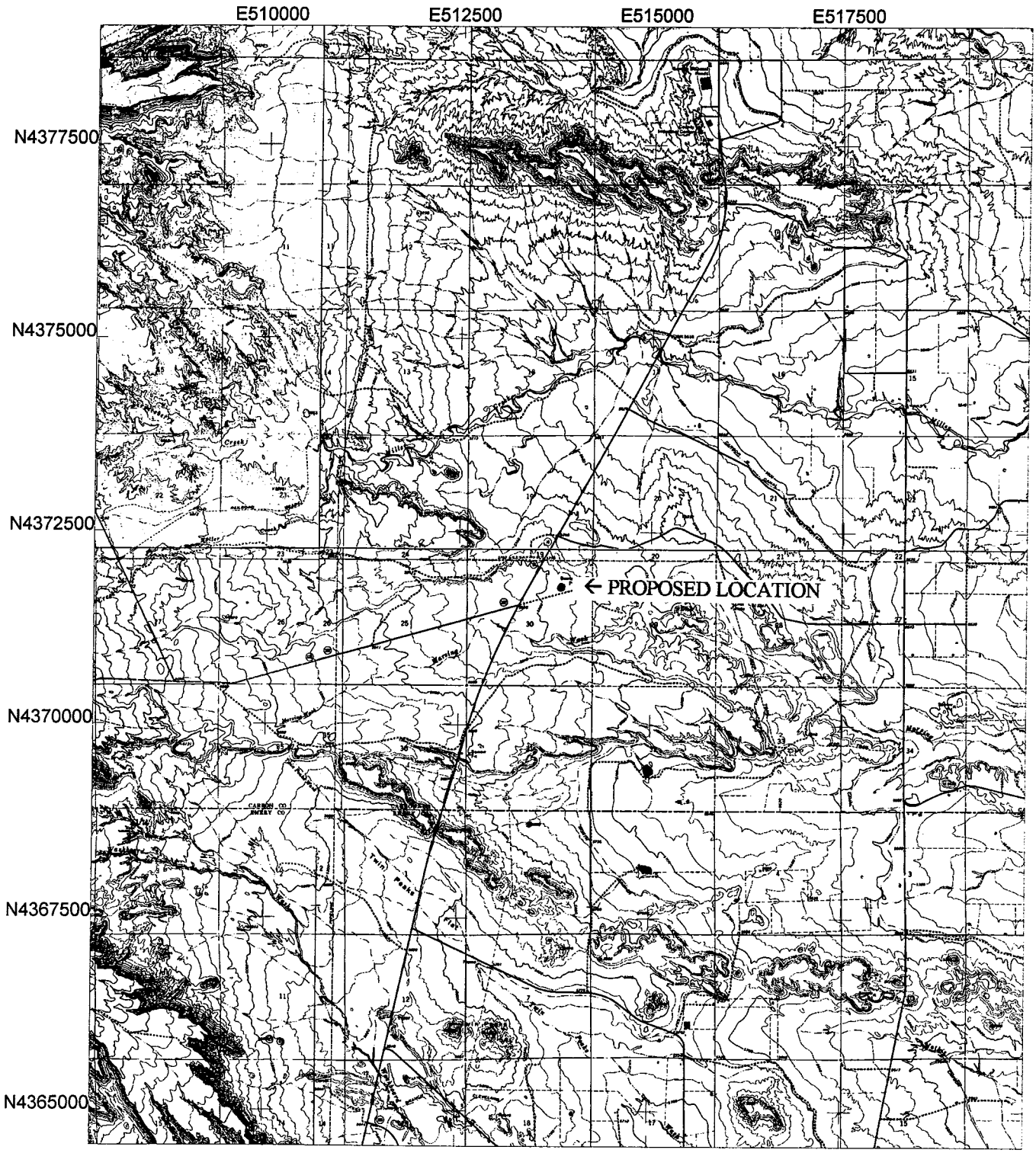


# Proposed Location -- USA 30-289

Universal Transverse Mercator
North 12
NAD83 (Conus)

N

Scale 1:75000
0 8000
Feet

6/8/1998
Pathfinder Office™
Trimble

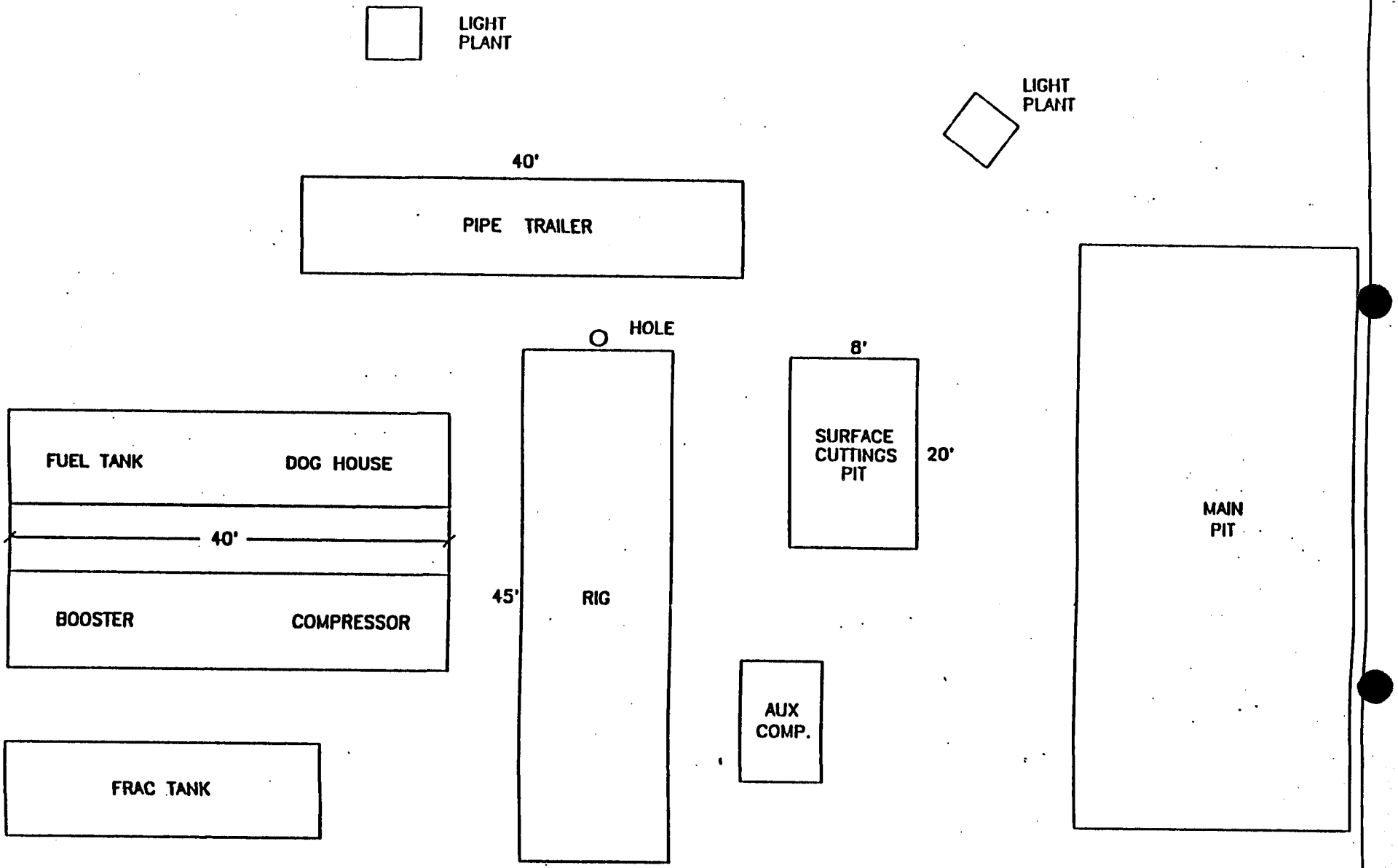


APPROXIMATE LAYOUT OF RIG & EQUIPMENT

( NOT TO SCALE )

Exhibit "C"

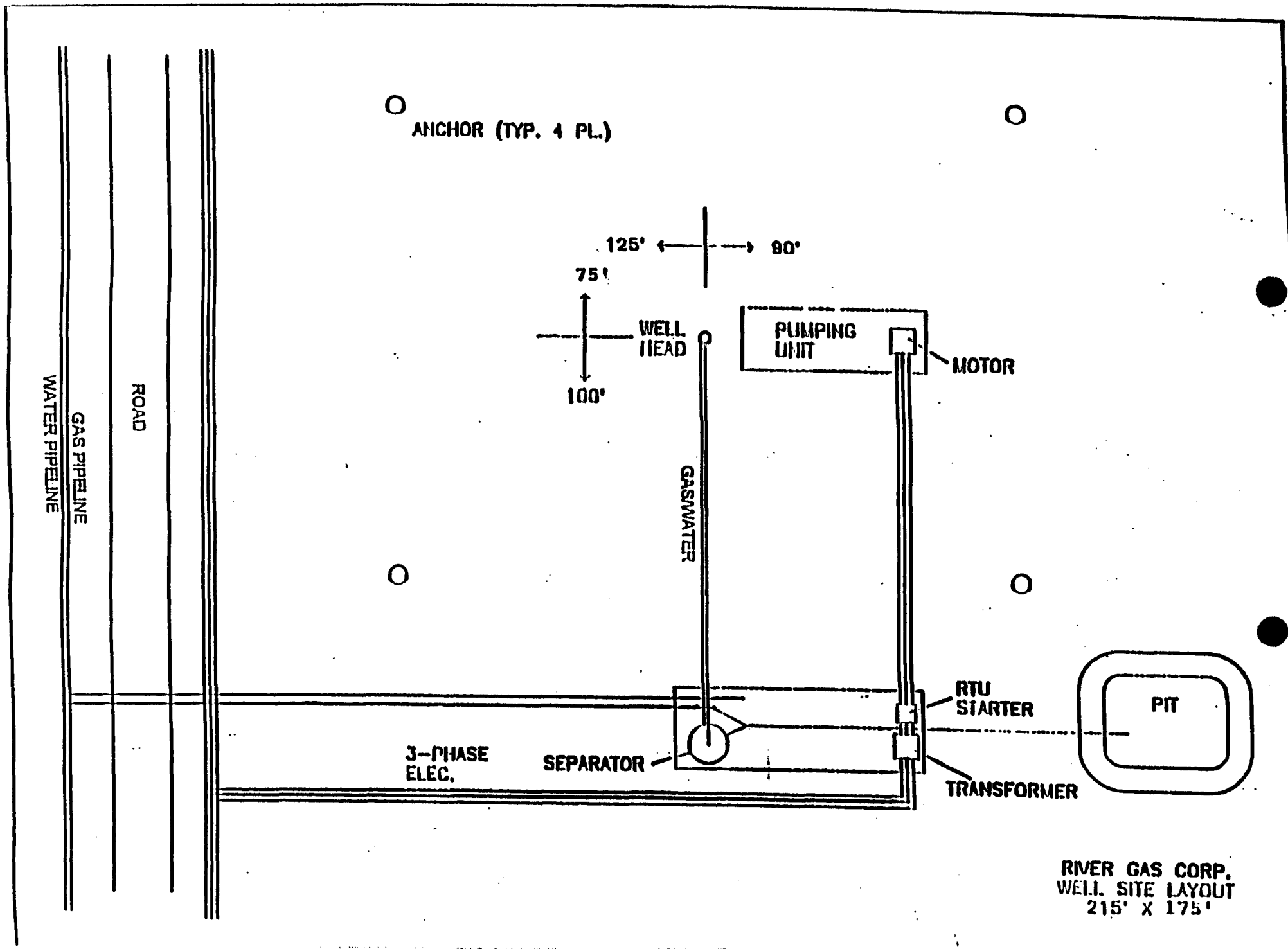
ANCHOR (TYP. 4 PL.)
125'
90'
75'
100'
WELL HEAD
PUMPING UNIT
MOTOR
GAS/WATER
RTU STARTER
PIT
3-PHASE ELEC.
SEPARATOR
TRANSFORMER
WATER PIPELINE
GAS PIPELINE
ROAD
RIVER GAS CORP.
WELL SITE LAYOUT
215' X 175'

# RIVER GAS CORPORATION

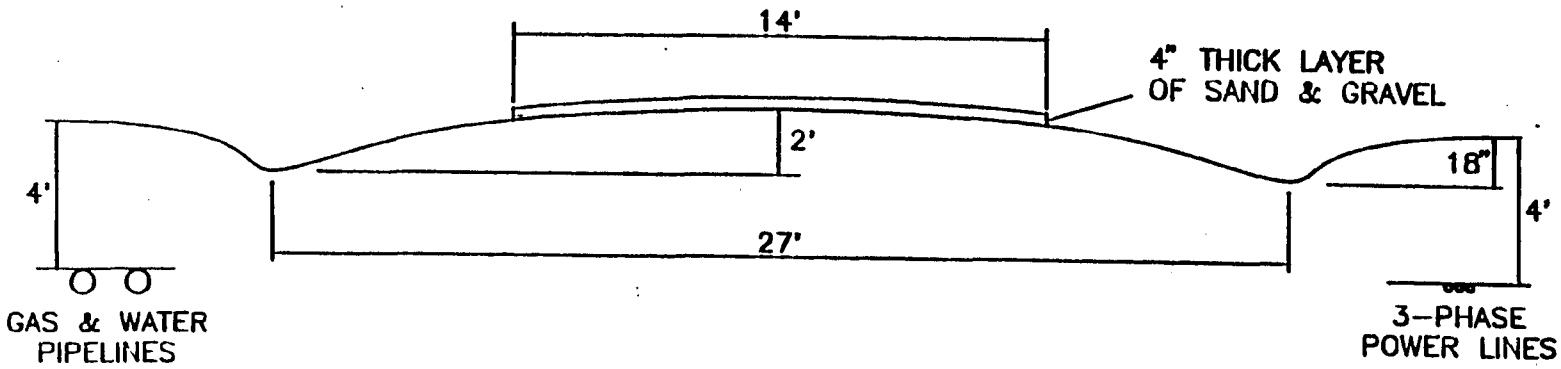


## TYPICAL ROAD CROSS-SECTION

NOT TO SCALE

Exhibit "F"

# DIVERTER HEAD

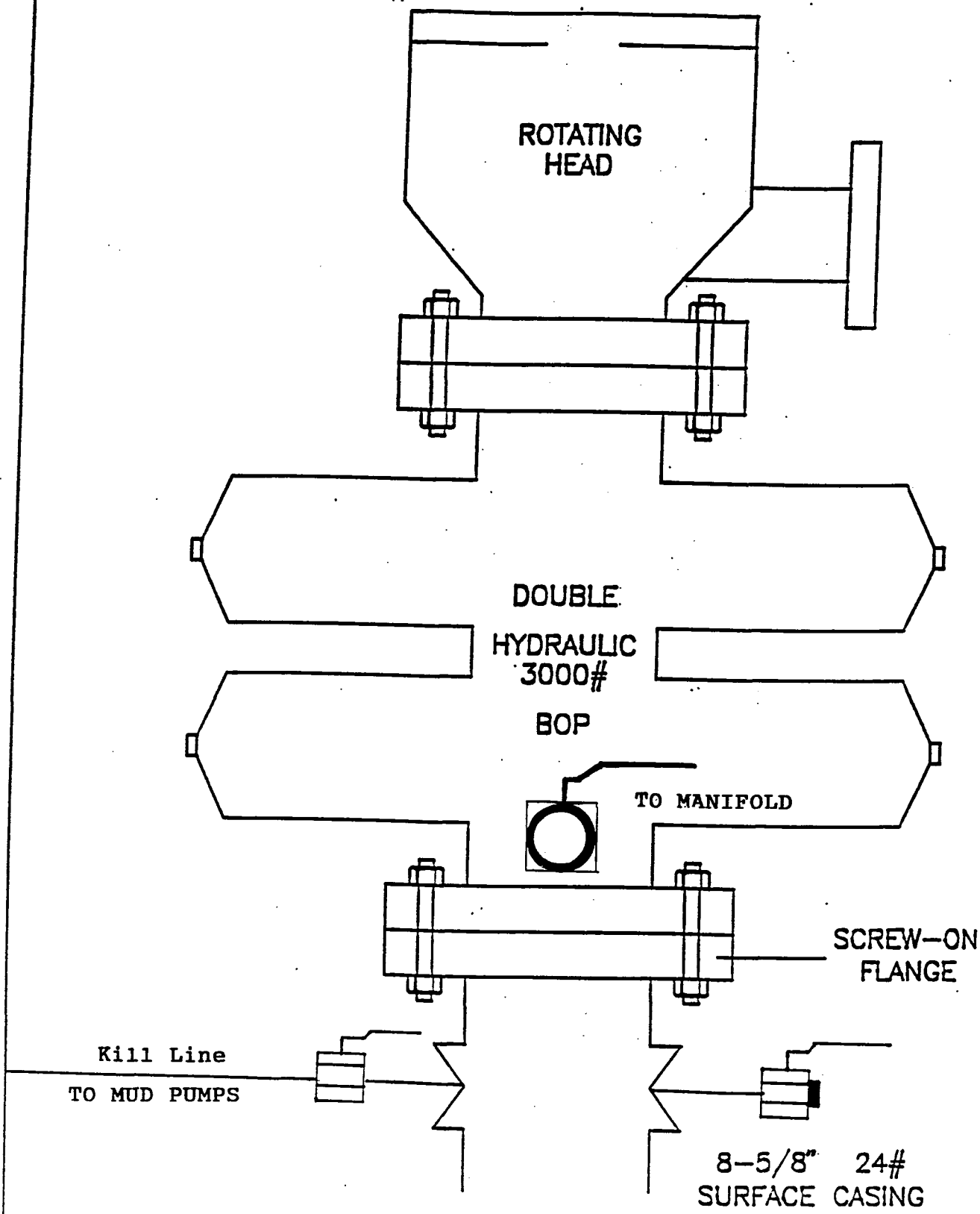


RIVER GAS CORP.

(1) 2" 5M FLANGED CHOKE
(2) 2" 5M GATE VALVE (FLANGED)
(3) 2" 5M STUDDED CROSS
(4) 2" 5M GATE VALVE (FLANGED)
(5) 2" 5M FLANGED CHOKE
(6) 2" 5M GATE VALVE (FLANGED)
(7) 2" LINE
(8) 2" 5M GATE VALVE (FLANGED)
(9) 3000# GAUGE

NOTE:
NUMBER 8 GATE VALVE SITS ON TOP OF MANIFOLD BETWEEN STUDDED CROSS AND 3000# GAUGE.

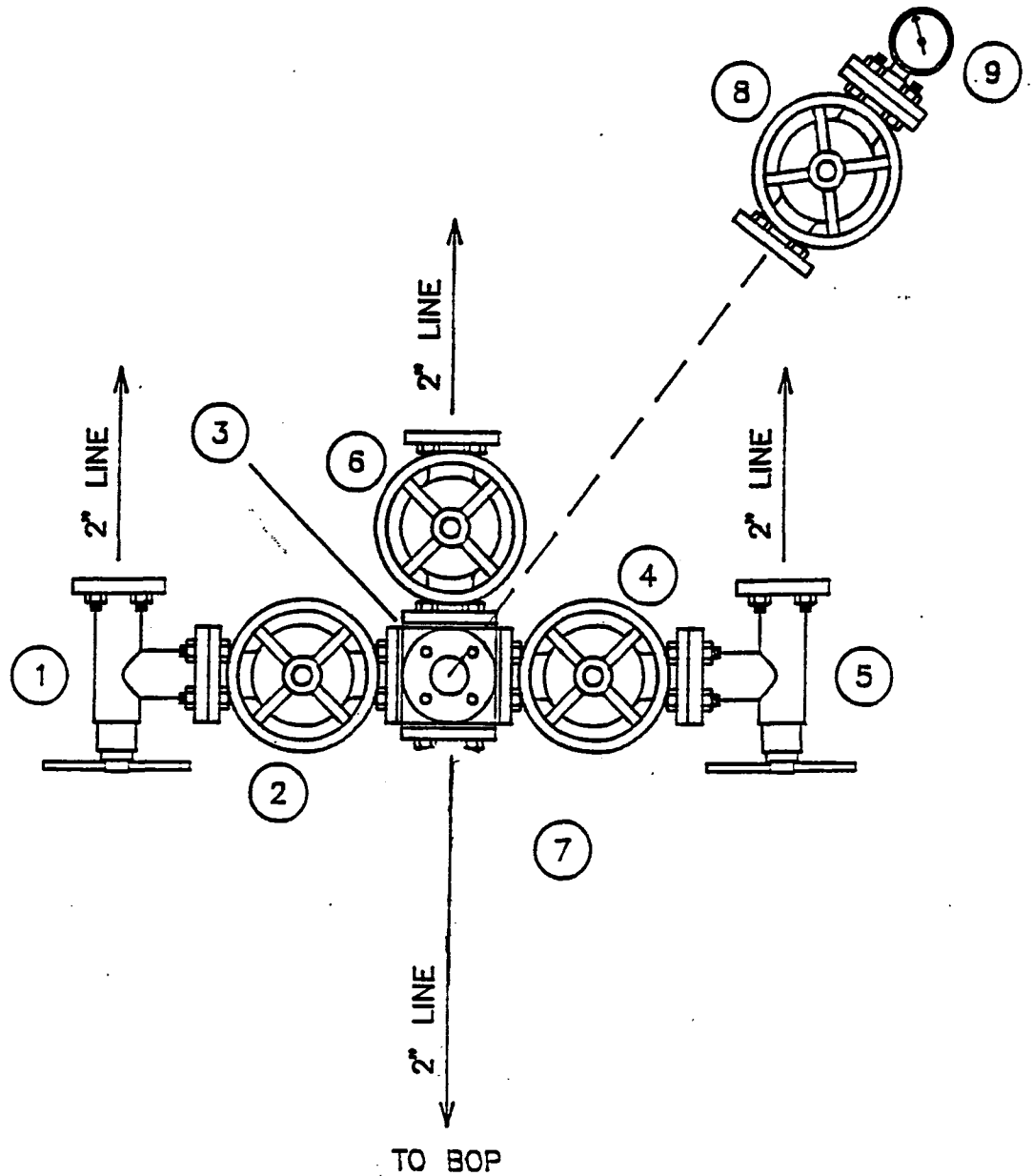


AND A NEW 2" BALL VALVE
FULL OPEN 5000PSI

# MANIFOLD

RIVER GAS CORP.

WORKSHEET
APPLICATION FOR PERMIT TO DRILL

APD RECEIVED: 06/12/98

API NO. ASSIGNED: 43-007-30452

WELL NAME: USA 30-289
OPERATOR: RIVER GAS CORPORATION (N1605)
CONTACT: Don Hamilton (435)637-8876

PROPOSED LOCATION:
NWNE 30 - T15S - R10E
SURFACE: 1184-FNL-1353-FEL
BOTTOM: 1184-FNL-1353-FEL
CARBON COUNTY
DRUNKARDS WASH FIELD (048)

LEASE TYPE: FED
LEASE NUMBER: UTU-76334
SURFACE OWNER: Federal

PROPOSED FORMATION: FRSD

| INSPECT LOCATION BY: / / | | |
|---|---|---|
| TECH REVIEW | Initials | Date |
| Engineering | | |
| Geology | | |
| Surface | | |

RECEIVED AND/OR REVIEWED:

✓ Plat
✓ Bond: Federal [✓] State[] Fee[]
(No. 5304604)
N Potash (Y/N)
N Oil Shale (Y/N) *190-5(B)
✓ Water Permit
(No. PRWID / City of Price)
N RDCC Review (Y/N)
(Date: )

N/A St/Fee Surf Agreement (Y/N)

LOCATION AND SITING:

___ R649-2-3. Unit ___

___ R649-3-2. General

___ R649-3-3. Exception

✓ Drilling Unit
Board Cause No: 137-2(B)
Date: 2-25-82
*160 Acre Gas

COMMENTS:

STIPULATIONS: ① FEDERAL APPROVAL

DIVISION OF OIL, GAS & MINING

OPERATOR: RIVER GAS CORP. (N1605)

FIELD: DRUNKARDS WASH (048)

SEC. 20 & 30, TWP 15S , RNG 10E

COUNTY: CARBON UAC: R649-2-3 DRUNKARDS WASH

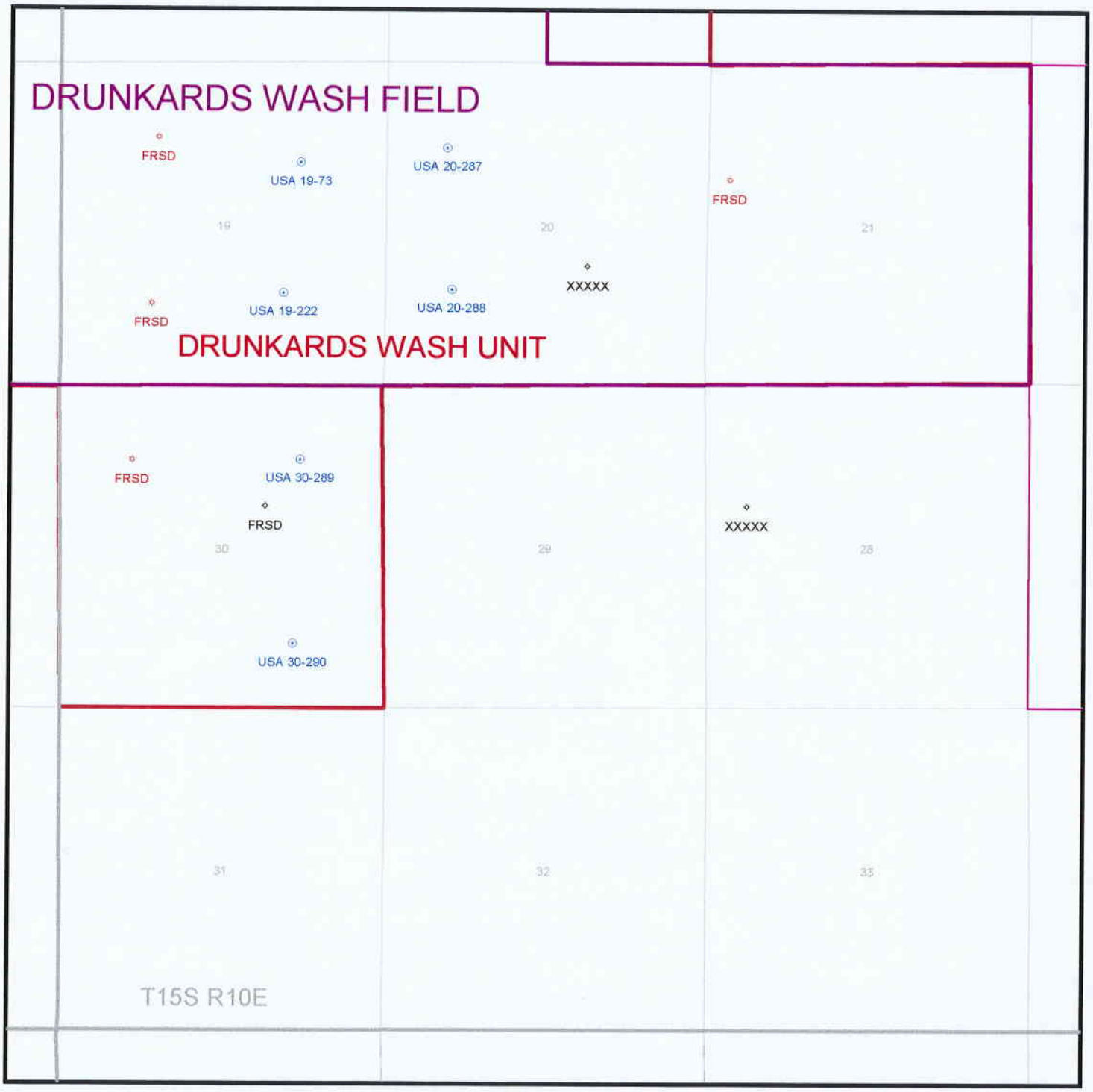


DATE PREPARED:
15-JUNE-1998

State of Utah
DEPARTMENT OF NATURAL RESOURCES
DIVISION OF OIL, GAS AND MINING

Michael O. Leavitt
Governor
Ted Stewart
Executive Director
Lowell P. Braxton
Division Director

1594 West North Temple, Suite 1210
PO Box 145801
Salt Lake City, Utah 84114-5801
801-538-5340
801-359-3940 (Fax)
801-538-7223 (TDD)

June 23, 1998

River Gas Corporation
1305 South 100 East
Price, Utah 84501

Re: USA 30-289 Well, 1184' FNL, 1353' FEL, NW NE, Sec. 30, T. 15 S., R. 10 E., Carbon County, Utah

Gentlemen:

Pursuant to the provisions and requirements of Utah Code Ann. 40-6-1 et seq., Utah Administrative Code R649-3-1 et seq., and the attached Conditions of Approval, approval to drill the referenced well is granted.

This approval shall expire one year from the above date unless substantial and continuous operation is underway, or a request for extension is made prior to the expiration date. The API identification number assigned to this well is 43-007-30452.

Sincerely,

for John R. Baza
Associate Director

lwp
Enclosures
cc: Carbon County Assessor
Bureau of Land Management, Moab District Office

**Operator:** River Gas Corporation

**Well Name & Number:** USA 30-289

**API Number:** 43-007-30452

**Lease:** UTU-76334

**Location:** NW NE **Sec.** 30 **T.** 15 S. **R.** 10 E.

## Conditions of Approval

1. General
   Compliance with the requirements of Utah Admin. R. 649-1 et seq., the Oil and Gas Conservation General Rules, and the applicable terms and provisions of the approved Application for Permit to Drill.

2. Notification Requirements
   Notify the Division within 24 hours prior to spudding the well or commencing drilling operations. Contact Jim Thompson at (801)538-5336.

   Notify the Division prior to commencing operations to plug and abandon the well. Contact Dan Jarvis at (801) 538-5338 or Robert Krueger at (801) 538-5274.

3. Reporting Requirements
   All required reports, forms and submittals shall be promptly filed with the Division, including but not limited to the Entity Action Form (Form 6), Report of Water Encountered During Drilling (Form 7), Weekly Progress Reports for drilling and completion operations, and Sundry Notices and Reports on Wells requesting approval of change of plans or other operational actions.

4. State approval of this well does not supercede the required federal approval which must be obtained prior to drilling.

CONFIDENTIAL

DIVISION OF OIL, GAS AND MINING

SPUDDING INFORMATION

Name of Company: RIVER GAS CORPORATION

Well Name: USA 30-289

Api No. 43-007-30452 Lease Type: FEDERAL

Secton 30 Township 15S Range 10E County CARBON

Drilling Contractor PENSE BROTHERS DRILLING RIG # 11

SPUDDED:

Date 03/24/99

Time 10:30 PM

How DRY HOLE

Drilling will commence

Reported by D J WILSON

Telephone # 1-435-637-8876

Date 3/25/99 Signed: CHD

Form 3160-5
(June 1990)

UNITED STATES
DEPARTMENT OF THE INTERIOR
BUREAU OF LAND MANAGEMENT

FORM APPROVED
Budget Bureau No. 1004-0135
Expires: March 31, 1993

## SUNDRY NOTICES AND REPORTS ON WELLS

Do not use this form for proposals to drill or to deepen or reentry to a different reservoir.
Use "APPLICATION FOR PERMIT--" for such proposals

*SUBMIT IN TRIPLICATE*

5. Lease Designation and Serial No.
UTU-76334

6. If Indian, Allottee or Tribe Name
N/A

7. If Unit or CA, Agreement Designation
N/A

1. Type of Well
☐ Oil Well ☒ Gas Well ☐ Other

8. Well Name and No.
USA 30-289

2. Name of Operator
River Gas Corporation

9. API Well No.

3. Address and Telephone No.
1305 South 100 East Price, Utah 84501 (801)637-8876

10. Field and Pool, or Exploratory Area
Undesignated

4. Location of Well (Footage, Sec.,T., R:, M., or Survey Description)
1184' FNL, 1353' FEL
NW/4, NE/4, Sec.30, T15S, R10E, SLB&M

11. County or Parish, State
Carbon County, Utah

12. **CHECK APPROPRIATE BOX(s) TO INDICATE NATURE OF NOTICE, REPORT, OR OTHER DATA**

| TYPE OF SUBMISSION | TYPE OF ACTION | |
|---|---|---|
| ☐ Notice of Intent | ☐ Abandonment | ☐ Change of Plans |
| ☐ Subsequent Report | ☐ Recompletion | ☐ New Construction |
| ☐ Final Abandonment Notice | ☐ Plugging Back | ☐ Non-Routine Fracturing |
| | ☐ Casing Repair | ☐ Water Shut-Off |
| | ☐ Altering | ☐ Conversion to Injection |
| | ☐ Other __ | ☐ Dispose Water (Note: Report results of multiple completion on Well Completion or |

13. Describe Proposed or Completed Operations ( Clearly state all pertinent details, and give pertinent dates, including estimated date of starting any proposed work. If well is directionally drilled, give subsurface locations and measured and true vertical depths for all markers and zones pertinent to this work.)*

Request for exception to the state spacing rule based on Geology.

JUN 1998
Received
BLM
Moab District

RECEIVED

14. I hereby certify that the foregoing is true and correct

Signed Don S. Hamilton Title Permit Specialist Date 6/11/98

(This space for Federal or State office use)

Approved by _____ Title _____ Date _____
Conditions of approval, if any:

Title 18 U.S.C. Section 1001, makes it a crime for any person knowingly and willfully to make to any department or agency of the United States any false, fictitious or fraudulent statements or representations as to any matter within its jurisdiction.

*** See Instructions on Reverse Side**

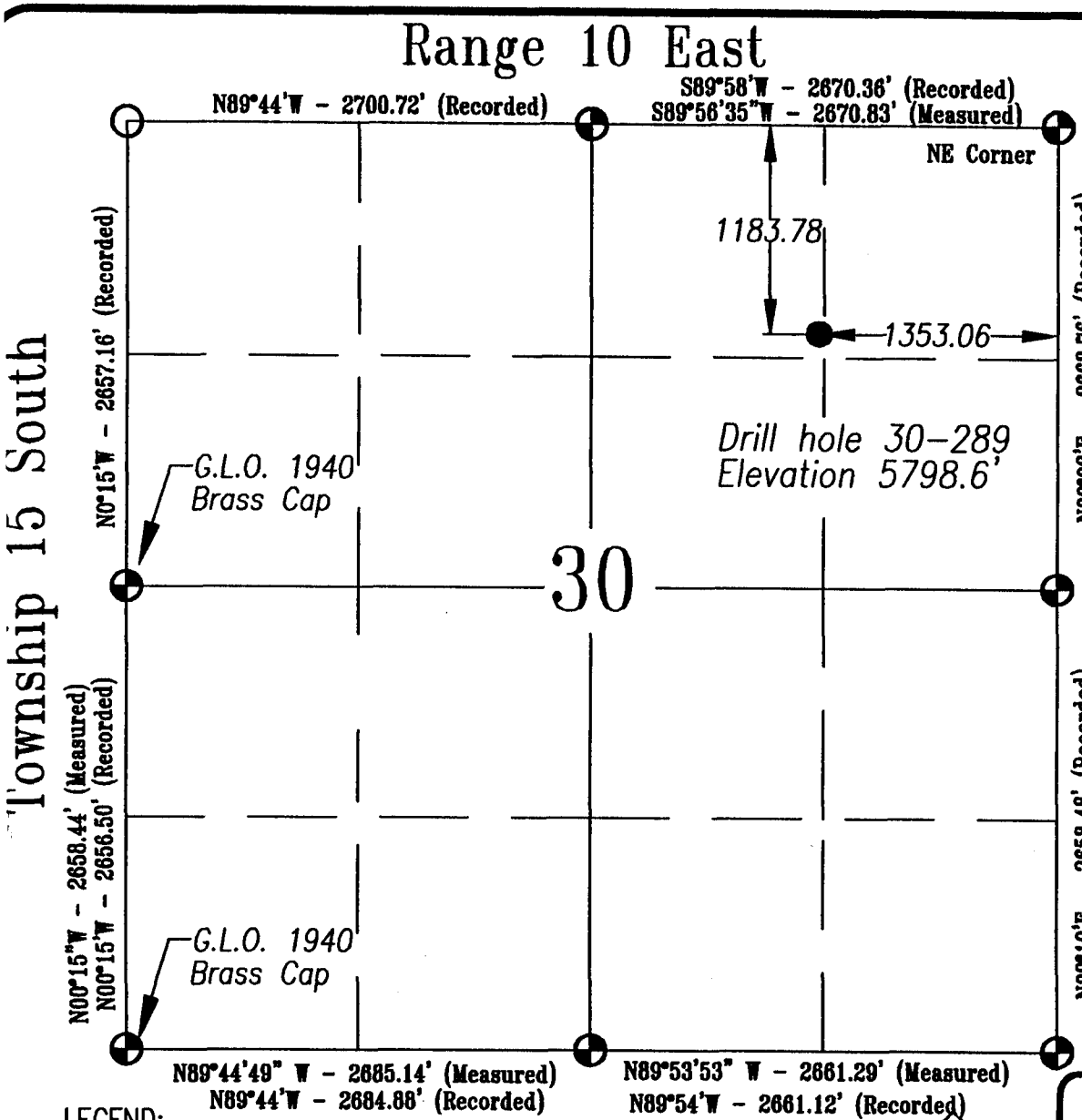


## Basis of Bearing:

*Basis of Bearing N00°15'W recorded between the West quarter Corner and the SW Corner of Section 30, Township 15 South, Range 10 East, Salt Lake Base and Meridian.*

## Basis Of Elevation:

*Basis of Elevation of 5898' as indicated in the SW corner of Section 30, Township 15 South, Range 10 East, Salt Lake Base and Meridian, as shown on the Elmo Quadrangle 7.5 Minute Series Map.*

## Description of Location:

*Proposed Drill Hole located in the North 1/2 NE 1/4 of Section 30; 1183.78' South and 1353.06' West from the NE corner of Section 30, T15S, R10E, Salt Lake Base & Meridian.*

## Surveyor's Certificate:

**I, Daniel W. Peatross, a Registered Licensed Land Surveyor, holding Certificate #259966, State of Utah, do hereby certify that the information on this drawing is true and accurate to the best of my knowledge and belief, and was conducted by myself, as shown hereon.**

Registered Land Surveyor
No. 259966
Daniel W. Peatross
State of Utah

Daniel W. Peatross
6-8-98

Exhibit "A"
1 of 3

LEGEND:

- ● *Drill Hole Location*
- ⊕ *Found Section corner monumented w/ Carbon County aluminum cap unless indicated otherwise.*
- ○ *Section Corner (Searched, Not Found)*

SCALE:
250' 0' 500' 1000'

| | |
|---|---|
| DRAWN BY: P. BOYLEN | Castle Valley<br>3266 South 125 West<br>Price, Utah 84501<br>(801) 637-9300<br>FAX (801) 637-2833 |
| CHECKED BY: L.W.J. | |
| DATE: 5/11/98 | |
| SCALE: 1"=1000' | |
| JOB NO. 276 | Surveyors |
| DRAWING NO. A-1 | **River Gas Corporation**<br>**Well# 30-289**<br>**Section 30, T15S, R10E, S.L.B.&M.**<br>**Carbon County, Utah** |
| SHEET 1 OF 4 | |

RIVER GAS CORPORATION
USA 30-289
Lease U-77354
NWNE Section 30, T. 15 S., R. 10 E.
Carbon County, Utah

## CONDITIONS OF APPROVAL

Approval of this application does not warrant or certify that the applicant holds legal or equitable title to those rights in the subject lease which would entitle the applicant to conduct operations thereon.

Be advised that River Gas Corporation is considered to be the operator of the above well and is responsible under the terms and conditions of the lease for the operations conducted on the leased lands.

Bond coverage for this well is provided by UT-0829 (Principal - River Gas Corporation) via surety consent as provided for in 43 CFR § 3104.2.

This office will hold the aforementioned operator and bond liable until the provisions of 43 CFR § 3106.7-2 continuing responsibility are met.

This permit will be valid for a period of one year from the date of approval. After permit termination, a new application must be filed for approval.

All lease operations will be conducted in full compliance with applicable regulations (43 CFR § 3100), Onshore Oil and Gas Orders, lease terms, notices to lessees, and the approved plan of operations. The operator is fully responsible for the actions of his subcontractors. A copy of these conditions and the approved plan will be made available to field representatives to insure compliance.

A. DRILLING PROGRAM

1. The BOP system shall be rated to 2M as proposed. Installation, testing and operation of the system shall be in conformance with Onshore Oil and Gas Order No. 2.

2. Air drilling must be done in accordance with Onshore Oil and Gas Order No. 2, III.E. As a minimum use of a rotating head, spark arresters, blooie line, float valve, and automatic igniter is required.

3. In accordance with the proposal, cement for the 8-5/8" and 5-1/2" casing shall be circulated to surface. If the cement does not circulate, a CBL or other appropriate tool must be run to determine the top-of-cement.

4. Any fluid bearing zones or lost circulation zones encountered while drilling will be isolated behind casing and cement.

5. This well is not a part of the Drunkards Wash Unit. Spacing requirements are specified by the State of Utah, Division of Oil, Gas and Mining (DOGM). Concurrent approval from DOGM is required prior to conducting surface disturbing activities.

B. SURFACE USE

1. The following appendices are attached for your reference. They are to be followed as conditions of approval:

   SM-1, Seed Mixture for Green Strip Areas
   SM-2, Seed Mixture for Final Reclamation

2. Whether the mud pit shall be lined will be determined at the time of construction.

3. Within six months of installation, surface structures shall be painted in the following flat, earth tone color: Slate Gray (5Y 6/1) Numbers in parenthesis refer to Munsell Soil Color Charts. Any brand of paint may be used provided the colors match. Any facilities that must be painted to comply with OSHA standards are exempt.

4. Soil is to be tested at a certified soils lab. If soil tests results determine the need, commercial fertilizer shall be applied. The authorized officer of the BLM will make the determination if fertilizer is to be applied. The soil on all sites to be reseeded is to be tested for electrical conductivity, SAR (Sodium Absorption Ratio), macronutrients (N,P,K) and DTPA micronutrient (Fe, Zn, Cu, Mg, Ca, Cr, Ni). Commercial fertilizer with a formula of 16-16-8 is to be applied at a rate of 200 pounds per acre to the site as directed by the authorized officer. The rate may be adjusted depending on soil test results.

GENERAL CONSTRUCTION

1. Operator shall contact the Price BLM Office at least forty-eight hours prior to the anticipated start of construction and/or any surface disturbing activities. The BLM may require and schedule a preconstruction conference with the operator prior to the operator commencing construction and/or surface disturbing activities. The operator and the operator's contractor, or agents involved with construction and/or any surface disturbing activities associated with the project, shall attend this conference to review the Conditions of Approval and plan of development. The operator's inspector will be designated at the pre-drill conference, and is to be given an approved copy of all maps, permits and conditions of approval before the start of construction. The BLM will also designate a representative for the project at the preconstruction conference.

2. The operator shall designate a representative(s) who shall have the authority to

act upon and to implement instructions from the BLM. The operator's representative shall be available for communication with the BLM within a reasonable time when construction or other surface disturbing activities are underway.

3. Any cultural and/or paleontological resource (historic or prehistoric site or object) discovered by the operator, or any person working on his behalf, on public land is to be immediately reported to the Price BLM Office. The operator will suspend all operations in the immediate area of such discovery until written authorization to proceed is issued by the Price BLM Office. An evaluation of the discovery will be made by the BLM to determine appropriate actions to prevent the loss of significant cultural or scientific values. The operator is responsible for the cost of evaluation of any site found during construction. The BLM will determine what mitigation is necessary.

4. During project construction, surface disturbance and vehicle travel shall be limited to the approved location and access routes. Any additional area needed must be approved by the Price BLM Office prior to use.

5. The operator must provide a trash cage for the collection and containment of all trash. The trash shall be disposed in an authorized landfill. The location and access roads shall be kept litter free.

6. Vegetation removal necessitated by construction shall be confined to the limits of actual construction. Removed vegetation will be stockpiled for use in reclamation or removed from the construction site at the direction of the BLM.

7. Prior to surface disturbance, topsoil is to be separately removed and segregated from other material. Topsoil depth will be decided onsite by BLM. If the topsoil is less than 6 inches, a 6-inch layer that includes the A horizon and the unconsolidated material immediately below the A horizon shall be removed and the mixture segregated and redistributed as the surface soil layer.

   Generally topsoil shall be stored within the pad site or adjacent to access roads. The company in consultation with BLM shall determine stockpile locations and dimensions at the onsite. If the topsoil stockpiles will not be redistributed for a period in excess of one (1) year, the stockpiles are to be seeded with seed mixture SM-2 (attached).

ROAD and PIPELINE CONSTRUCTION

8. Operator shall provide an inspector under the direction of a registered professional engineer (PE) at all times during road construction. A PE shall certify (statement with PE stamp) that the road was constructed to the required Bureau of Land

Management (BLM) road standards.

9. Road construction or routine maintenance activities are to be performed during periods when the soil can adequately support construction equipment. If such equipment creates ruts more than 6 inches deep, the soil is deemed too wet to adequately support construction equipment.

10. The operator is responsible for maintenance of all roads authorized through the lease or a right-of-way. Construction and maintenance shall comply with Class II or III Road Standards as described in BLM Manual Section 9113 and the Moab District Road Standards, except as modified by BLM. Maintenance may include but is not limited to grading, applying gravel, snow removal, ditch cleaning, headcut restoration/prevention.

11. Topsoil from access roads and pipelines is to be wind rowed along the uphill side of the road or stored in an approved manner. When the road and pipeline is rehabilitated, this soil will then be used as a top coating for the seed bed.

12. Erosion-control structures such as water bars, diversion channels, and terraces will be constructed to divert water and reduce soil erosion on the disturbed area. Road ditch turnouts shall be equipped with energy dissipators as needed to avoid erosion. Where roads interrupt overland sheet-flow and convert this runoff to channel flow, ditch turnouts shall be designed to reconvert channel flow to sheet flow. Rock energy dissipators and gravel dispersion fans may be used, or any other design which would accomplish the desired reconversion of flow regime. As necessary cut banks, road drainages, and road crossings shall be armored or otherwise engineered to prevent headcutting.

## PAD CONSTRUCTION

13. During the construction of the drill pad, suitable topsoil material is to be stripped and conserved in a stockpile on the pad. If stockpiles are to remain for more than a year, they shall be seeded with the seed mixture in appendix SM-2, attached.

14. Generally, drill pads are to be designed to prevent overland flow of water from entering or leaving the site. The pad is to be sloped to drain spills and water into the reserve pit. The drill pad shall be designed to disperse diverted overland flow and to regulate flow velocity so as to prevent or minimize erosion. Well pad diversion outlets shall be equipped with rock energy brakes and gravel-bedded dispersion fans.

## REHABILITATION PROCEDURES

Site Preparation

15. The entire roadbed should be obliterated and brought back to the approximate original contour. Drainage control is to be reestablished as necessary. All areas affected by road construction are to be recontoured to blend in with the existing topography. All berms are to be removed unless determined to be beneficial by BLM. In recontouring the disturbed areas, care should be taken to not disturb additional vegetation.

Seedbed Preparation

16. An adequate seedbed should be prepared for all sites to be seeded. Areas to be revegetated should be chiselled or disked to a depth of at least 12 inches unless restrained by bedrock.

17. Ripping of fill materials should be completed by a bulldozer equipped with single or a twin set of ripper shanks. Ripping should be done on 4-foot centers to a depth of 12 inches. The process should be repeated until the compacted area is loose and friable, then shall be followed by final grading. Seedbed preparation will be considered complete when the soil surface is completely roughened and the number of rocks (if present) on the site is sufficient to cause the site to match the surrounding terrain.

18. After final grading, the stockpiled topsoil shall be spread evenly across the disturbed area.

Fertilization

19. Commercial fertilizer with a formula of 16-16-8 is to be applied at a rate of 200 pounds per acre to the site. The rate may be adjusted depending on soil.

20. Fertilizer is to be applied not more than 48 hours before seeding, and shall be cultivated into the upper 3 inches of soil.

21. Fertilizer is to be broadcast over the soil using hand-operated "cyclone-type" seeders or rotary broadcast equipment attached to construction or revegetation machinery as appropriate to slope. All equipment should be equipped with a metering device. Fertilizer application is to take place before the final seeding preparation treatment. Fertilizer broadcasting operations should not be conducted when wind velocities would interfere with even distribution of the material.

Mulching

22. When it is time to reclaim this location, the Price BLM Office will determine whether it will be necessary to use mulch in the reclamation process. The type of mulch should meet the following requirements: Wood cellulose fiber shall be natural or cooked, shall disperse readily in water, and shall be nontoxic. Mulch shall be thermally produced and air dried. The homogeneous slurry or mixture shall be capable of application with power spray equipment. A colored dye that is noninjurious to plant growth may be used when specified. Wood cellulose fiber is to be packaged in new, labeled containers. A minimum application of 1500 pounds per acre shall be applied. A suitable tackifier shall be applied with the mulch at a rate of 60 to 80 pounds per acre.

    An alternative method of mulching on small sites would be the application of straw or hay mulch at a rate of 2000 pounds per acre. Hay or straw shall be certified weed free. Following the application of straw or hay, crimping shall occur to ensure retention.

Reseeding

23. All disturbed areas are to be seeded with the seed mixture required by the BLM. The seed mixture(s) shall be planted in the fall of the year (Sept-Nov), in the amounts specified in pounds of pure live seed (PLS)/acre. There shall be no noxious weed seed in the seed mixture. Seed will be tested and the viability testing of seed shall be done in accordance with State law(s) and within 12 months prior to planting. Commercial seed will be either certified or registered seed. The seed mixture container shall be tagged in accordance with State law(s) and available for inspection by the BLM. Seed is to be planted using a drill equipped with a depth regulator to ensure proper depth of planting where drilling is possible. The seed mixture shall be evenly and uniformly planted over the disturbed area. (Smaller/heavier seeds tend to drop to the bottom of the drill and are planted first. Appropriate measures should be taken to ensure this does not occur.) Where drilling is not possible, seed is to be broadcast and the area raked or chained to cover the seed. Woody species with seeds that are too large for the drill will be broadcast. When broadcasting the seed, the pounds per acre noted below are to be increased by 50 percent. Reseeding may be required if a satisfactory stand is not established to the surface rights owner's specifications. Evaluation of the seeding's success will not be made before completion of the second growing season after the vegetation becomes established. The Price BLM Office is to be notified a minimum of seven days before seeding a project.

24. The disturbed areas for the road and pipeline must be seeded in the fall of the year, immediately after the topsoil is replaced. The prescribed seed mixture is attached as appendix SM-2.

General

25. Prior to the use of insecticides, herbicides, fungicides, rodenticides and other similar substances, the operator must obtain from BLM, approval of a written plan. The plan must describe the type and quantity of material to be used, the pest to be controlled, the method of application, the location for storage and disposal of containers, and other information that BLM may require. A pesticide may be used only in accordance with its registered uses and within other agency limitations. Pesticides must not be permanently stored on public lands.

## SM-1

### Green Strip Areas

The following seed mixture will be planted along service road borrow ditches, around the edge of drill pads with a production well, and surrounding other production and maintenance facilities. The purpose for this seeding is to provide a "green strip" buffer to minimize fire hazards and prevent invasion and establishment of noxious weeds in areas that will receive continued disturbance for the life of these project areas.

| Common Plant Name | Scientific Name | Pounds per acre/ PLS* |
|---|---|---|
| Forage kochia | Kochia prostrata | 2 |
| Wyoming big sagebrush | Artemisia tridentata wyomingensis var. Gordon Creek | 1 |
| Douglas low rabbitbrush | Chiysothamnus viscidiflorus | 1 |
| Yellow sweetclover | Melilotus officinalis | 1 |
| Small burnet | Sanguisorba minor | 1 |
| Bottlebrush squirreltail | Elymus elymoides | 1 |
| Intermediate wheatgrass | Thinopyrum intermedium | 1 |
| | Total | 8 |

**SM-2**

**Sagebrush/Grass Areas**

BLM SEED MIXTURES FOR THE PRICE COALBED METHANE PROJECT
The following seed mixture is for areas that will receive final reclamation. Areas would be planted to protect them from soil erosion and to restore forage production.

NOTES: _____

| Common Name | Scientific Name | Pounds per acre/PLS* |
|---|---|---|
| Grasses | | |
| Indian ricegrass | Oryzopsis hymenoides | 2 |
| Squirreltail | Elymus elymoides | 2 |
| Thickspike wheatgrass | Elymus lanceolatus | 1 |
| Crested wheatgrass | Agropyron desertorum | 1 |
| Western Wheatgrass | Pascopyrum smithii | 1 |
| Forbs | | |
| Lewis flax | Linum perenne lewisii | 1 |
| Palmer penstemon | Penstemon palmerii | 1 |
| Small bumet | Sanguisorba minor | 1 |
| Shrubs | | |
| Forage kochia | Kochia prostrata | 1.5 |
| Whitestem rabbitbrush | Chrysothamnus nauseosus albicaulis | 1 |
| Fourwing saltbush | Atriplex canescens | 2 |
| Wyoming big sagebrush | Artemesia tridentata | 1.5 |
| | Total | 16 |

C. REQUIRED APPROVALS, REPORTS AND NOTIFICATIONS

Required verbal notifications are summarized in Table 1, attached.

Building Location- Contact the Resource Area, Natural Resource Protection Specialist at least 48 hours prior to commencing construction of location.

Spud- The spud date will be reported to the Price BLM Office 24 hours prior to spudding. Written notification in the form of a Sundry Notice (Form 3160-5) will be submitted to the Moab BLM Office within 24 hours after spudding, regardless of whether spud was made with a dry hole digger or big rig.

Daily Drilling Reports- Daily drilling reports shall detail the progress and status of the well and shall be submitted to the Moab BLM Office on a weekly basis.

Monthly Reports of Operations- In accordance with Onshore Oil and Gas Order No. 1, this well shall be reported on Minerals Management Service (MMS) Form 3160, "Monthly Report of Operations," starting the month in which operations commence and continuing each month until the well is physically plugged and abandoned. This report will be filed directly with MMS.

Sundry Notices- There will be no deviation from the proposed drilling and/or workover program without prior approval. "Sundry Notices and Reports on Wells" (Form 3160-5) will be filed for approval for all changes of plans and other operations in accordance with 43 CFR § 3162.3-2. Safe drilling and operating practices must be observed.

Drilling Suspensions- Operations authorized by this permit shall not be suspended for more than 30 days without prior approval of the Authorized Officer. All conditions of this approval shall be applicable during any operations conducted with a replacement rig.

Undesirable Events- Spills, blowouts, fires, leaks, accidents, or any other unusual occurrences shall be immediately reported to the Price BLM Area in accordance with requirements of NTL-3A.

Cultural Resources- If cultural resources are discovered during construction, work that might disturb the resources is to stop, and the Area Manager is to be notified.

First Production- Should the well be successfully completed for production, the District Office will be notified when the well is placed in producing status. Such notification may be made by phone, but must be followed by a sundry notice or letter not later than five (5) business days following the date on which the well is placed into production.

A first production conference will be scheduled as soon as the productivity of the well is apparent. This conference should be coordinated through the Price BLM Office. The Price BLM Office shall be notified prior to the first sale.

Well Completion Report- Whether the well is completed as a dry hole or as a producer, "Well Completion and Recompletion Report and Log" (Form 3160-4) will be submitted to the Moab BLM Office not later than thirty (30) days after completion of the well or after completion of operations being performed, in accordance with 43 CFR § 3162.4-1. Two copies of all logs, core descriptions, core analyses, well test data, geologic summaries, sample description, and all other surveys or data obtained and compiled during the drilling, workover, and/or completion operations, will be filed with Form 3160-4. When requested, samples (cuttings and/or samples) will be submitted to the District Office.

Venting/Flaring of Gas- Gas produced from this well may not be vented/flared beyond an initial, authorized test period of 30 days or 50 MMcf, whichever first occurs, without the prior, written approval of the authorized officer. Should gas be vented or flared without approval beyond the authorized test period, the well may be ordered shut-in until the gas can be captured or approval to continue the venting/flaring as uneconomic is granted. In such case, compensation to the lessor shall be required for that portion of the gas that is vented/flared without approval and which is determined to have been avoidably lost.

Produced Water- Produced waste water may be confined to an unlined pit for a period not to exceed 90 days after initial production. During the 90 day period, an application for approval of a permanent disposal method and location, along with the required water analysis, will be submitted to the Moab BLM Office for approval pursuant to Onshore Oil and Gas Order No. 7.

Off-Lease Measurement, Storage, Commingling- Prior approval must be obtained from the Moab BLM Office for off-lease measurement, off-lease storage and/or commingling (either down-hole or at the surface).

Plugging and Abandonment- If the well is completed as a dry hole, plugging instructions must be obtained from the Moab BLM Office prior to initiating plugging operations.

A "Subsequent Report of Abandonment" (Form 3160-5) will be filed with the Moab BLM Office within thirty (30) days following completion of the well for abandonment. This report will indicate where plugs were placed and the current status of surface restoration. Upon completion of approved plugging, a regulation marker will be erected in accordance with 43 CFR § 3162.6. Final abandonment will not be approved until the surface reclamation work required by the approved APD or approved abandonment notice has been completed to the satisfaction of the Price BLM Office, or the appropriate surface managing agency.

TABLE 1
NOTIFICATIONS

Notify Don Stephens at the BLM, Price Area Office in Price, Utah, at (801) 636-3608, or at home (801) 637-7967 for the following:

2 days prior to commencement of dirt work, construction and reclamation;

1 day prior to spudding;

50 feet prior to the surface casing setting depth;

3 hours prior to testing BOPE

If the person at the above number cannot be reached, notify the Moab District Office at (801) 259-2100. If unsuccessful, contact one of the people listed below.

Well abandonment operations require 24 hour advance notice and prior approval. In the case of newly drilled dry holes, verbal approval can be obtained by calling the Moab District Office, Branch of Fluid Minerals at (801) 259-2100. If approval is needed after work hours, you may contact the following:

| | | |
|---|---|---|
| Eric Jones, Petroleum Engineer | Office: | (801) 259-6111 |
| | Home: | (801) 259-2214 |
| Gary Torres, Petroleum Engineer | Office: | (801) 587-2141 |
| | Home: | (801) 587-2705 |

Form 3160-3
(December 1990)

SUBMIT IN TRIPLICATE*
(Other instructions on reverse side)

Form approved.
Budget Bureau No. 1004-0136
Expires: December 31, 1991

UNITED STATES
DEPARTMENT OF THE INTERIOR
BUREAU OF LAND MANAGEMENT

# APPLICATION FOR PERMIT TO DRILL OR DEEPEN

5. LEASE DESIGNATION AND SERIAL NO.: UTU-~~76334~~ 77384

6. IF INDIAN, ALLOTTEE OR TRIBE NAME: N/A

7. UNIT AGREEMENT NAME: N/A

8. FARM OR LEASE NAME, WELL NO.: USA 30-289

9. API WELL NO.: 43-007-30452

1a. TYPE OF WORK: DRILL [X] DEEPEN [ ]

b. TYPE OF WELL: OIL WELL [ ] GAS WELL [X] OTHER SINGLE ZONE [X] MULTIPLE ZONE [ ]

2. NAME OF OPERATOR: RIVER GAS CORPORATION

3. ADDRESS AND TELEPHONE NO.: 1305 So. 100 E. Price, Utah 84501 (801) 637-8876

10. FIELD AND POOL, OR WILDCAT: Undesignated

4. LOCATION OF WELL (Report location clearly and in accordance with any State requirements.*)
At surface: 1184' FNL, 1353' FEL
At proposed prod. zone:

11. SEC., T., R., M., OR BLK. AND SURVEY OR AREA: NW/4, NE/4 Sec.30, T15S, R10E, SLB&M

14. DISTANCE IN MILES AND DIRECTION FROM NEAREST TOWN OR POST OFFICE*: 7.2 miles west of Price, Utah

12. COUNTY OR PARISH: CARBON

13. STATE: UTAH

15. DISTANCE FROM PROPOSED* LOCATION TO NEAREST PROPERTY OR LEASE LINE, FT. (Also to nearest drig. unit line, if any): 1184'

16. NO. OF ACRES IN LEASE: 1242.57 acres

17. NO. OF ACRES ASSIGNED TO THIS WELL: 160 acres

18. DISTANCE FROM PROPOSED LOCATION TO NEAREST WELL, DRILLING, COMPLETED, OR APPLIED FOR, ON THIS LEASE, FT.: 3000'

19. PROPOSED DEPTH: 2430'

20. ROTARY OR CABLE TOOLS: Rotary

21. ELEVATIONS (Show whether DF, RT, GR, etc.): 5799' GR

22. APPROX. DATE WORK WILL START*: August 1998

23. PROPOSED CASING AND CEMENTING PROGRAM

| SIZE OF HOLE | GRADE, SIZE OF CASING | WEIGHT PER FOOT | SETTING DEPTH | QUANTITY OF CEMENT |
|---|---|---|---|---|
| 14" | 12-3/4" | Conductor | 25 ' | |
| 11" | 8-5/8" | 24 #/ft | 243' | 108 sks.G+2%CaCl+1/4#per sack flocel |
| 7- 7/8" | 5-1/2" | 17 #/ft | 2430' | 236 sks 50/50 POZ+8%gel+2%CaCl+10%extender. 75 sks "G"thixotropic |

SEE ATTACHED

RECEIVED MAR 12 1999 DIV. OF OIL, GAS & MINING

JUN 1998 Received BLM Moab District

FLARING OR VENTING OF GAS IS SUBJECT TO NTL 4-A 12/80

CONDITIONS OF APPROVAL ATTACHED

IN ABOVE SPACE DESCRIBE PROPOSED PROGRAM: If proposal is to deepen, give data present productive zone and proposed new productive zone. If proposal is to drill or deepen directionally, give pertinent data on subsurface locations and measured and true vertical depths. Give blowout preventer program, if any.

24.

SIGNED Don S. Hamilton TITLE Permit Specialist DATE June 11, 1998

(This space for Federal or State office use)

PERMIT NO. _____ APPROVAL DATE _____

Application approval does not warrant or certify that the applicant holds legal or equitable title to those rights in the subject lease which would entitle the applicant to conduct operations thereon.
CONDITIONS OF APPROVAL, IF ANY:

APPROVED BY /S/ WILLIAM C. STRINGER TITLE Assistant Field Manager, Resource Management DATE MAR 16 1999

***See Instructions On Reverse Side**

Title 18 U.S.C. Section 1001, makes it a crime for any person knowingly and willfully to make to any department or agency or the United States any false, fictitious or fraudulent statements or representations as to any matter within its jurisdiction.

# United States Department of the Interior

BUREAU OF LAND MANAGEMENT
Utah State Office
P.O. Box 45155
Salt Lake City, UT 84145-0155

JUN 2 4 1998

IN REPLY REFER TO
3100
UTU-76334
(UT-932)
CERTIFIED MAIL--Return Receipt Requested

DECISION

| | | |
|---|---|---|
| River Gas Corporation<br>(Und. 50% Int.)<br>511 Energy Center Blvd.<br>Northport, AL 35476 | : | Oil and Gas Lease<br>UTU-76334 |
| Texaco Exploration and Production Inc.<br>(Und. 50% Int.)<br>P.O. Box 2100<br>Denver, CO 80201 | : | |

Lease Segregated

The 4th Expansion for the Drunkards Wash Unit Agreement was approved effective April 1, 1998, with River Gas Corporation as unit operator.

Part of the lands in the subject oil and gas lease are within the unit area and are committed to the unit agreement. Under regulations in 43 CFR 3107.3-2, oil and gas lease UTU-76334, dated March 1, 1994, is hereby segregated as to the lands outside the unit area as follows:

Lands within the unit area, retaining Serial No.UTU-76334:

T. 15 S., R. 10 E., SLM, Utah
Sec. 30, lots 3, 4, E2SW.
Containing 161.07 Acres Annual Rental $243.00

Lands outside the unit area, segregated and given Serial No. UTU-77354:

T. 15 S., R. 10 E., SLM, Utah USA 30-289
Sec. 30, E2; USA 30-290
Sec. 31, all.
Containing 960.68 Acres Annual Rental $1,441.50

If you have any questions concerning this decision, please contact Linda Sorenson at 801-539-4112.

for Robert Lopez
Group Leader
Minerals Adjudication Group

a Vmoss

bcc: Moab Field Office
Unit File - Drunkards Wash
MMS, Rose Davalos

LSorenson:ls 6-24-98 (UTU-76334)

Form 3160-5
(June 1990)

UNITED STATES
DEPARTMENT OF THE INTERIOR
BUREAU OF LAND MANAGEMENT

FORM APPROVED
Budget Bureau No. 1004-0135
Expires: March 31, 1993

# SUNDRY NOTICES AND REPORTS ON WELLS

Do not use this form for proposals to drill or to deepen or reentry to a different reservoir.
Use "APPLICATION FOR PERMIT--" for such proposals

*SUBMIT IN TRIPLICATE*

CONFIDENTIAL

5. Lease Designation and Serial No.
UTU-77354

6. If Indian, Allottee or Tribe Name
N/A

7. If Unit or CA, Agreement Designation
N/A

1. Type of Well
☐ Oil ☒ Gas ☐

8. Well Name and No.
USA 30-289

2. Name of Operator
River Gas Corporation

9. API Well No.
43-007-30452

3. Address and Telephone No.
1305 South 100 East Price, Utah 84501 (435)637-8876

10. Field and Pool, or Exploratory Area
undesignated

4. Location of Well (Footage, Sec.,T., R., M., or Survey Description)
1184' FNL, 1353' FEL
NW/4,NE/4,Sec.30, T15S,R10E, SLB&M

11. County or Parish, State
Carbon County, Utah

12. **CHECK APPROPRIATE BOX(s) TO INDICATE NATURE OF NOTICE, REPORT, OR OTHER DATA**

| TYPE OF SUBMISSION | TYPE OF ACTION | |
|---|---|---|
| ☐ Notice of Intent | ☒ Weekly Report | ☐ |
| ☐ Subsequent Report | ☐ Change of Name | ☐ Change of Plans |
| ☐ Final Abandonment Notice | ☐ Recompletion | ☐ New Construction |
| | ☐ Plugging Back | ☐ Non-Routine Fracturing |
| | ☐ Casing Repair | ☐ Water Shut-Off |
| | ☐ Altering Casing | ☐ Conversion to Injection |

13. Describe Proposed or Completed Operations ( Clearly state all pertinent details, and give pertinent dates, including estimated date of starting any proposed work. If well is directionally drilled, give subsurface locations and measured and true vertical depths for all markers and zones pertinent to this work.)*

See Attached

CONFIDENTIAL

RECEIVED
MAR 29 1999
DIV. OF OIL, GAS & MINING

COPY

14. I hereby certify that the foregoing is true and correct

Signed Dawn Wilson Title Administrative Asst. Date 3/26/99

(This space for Federal or State office use)

Approved by _____ Title _____ Date _____
Conditions of approval, if any:

Title 18 U.S.C. Section 1001, makes it a crime for any person knowingly and willfully to make to any department or agency of the United States any false, fictitious or fraudulent statements or representations as to any matter within its jurisdiction.

*** See Instructions on Reverse Side**

DAILY WELL REPORT

River Gas Corporation
USA 30-289
1184' FNL, 1353' FEL
NW/4, NE/4, Sec.30,T15S,R10E
CARBON COUNTY, UTAH
SURVEYED ELEVATION:5799'
API# 43-015-30452
DRILLING CONTRACTOR: Pense Bros. Rig#11

PAGE 1

**DRILLING**

Day 1. 3/25/99. Current Depth: 270'. Present Operations: WOC. Drilled in 24 hrs: 270'. Total rotating hrs: 4-1/2 hours. Drilled from 0' to 15' with 15" hammer bit#1. Drilled from 15' to 270' with 11" hammer bit#2. Finish moving and rig up on hole. **Spud at 10:30pm 3/24/99.** 10:00-11:00pm Drill conductor hole. 11:00-12:00am Set conductor 15' and nipple up to drill 11" hole. 12:00-4:00am Drill 270' of 11" hole and TOOH. 4:00-5:00am Run in hole with 261.5' of 8-5/8" casing. 5:00-6:00 RU Dowell and cement surface pipe. Close valve at 5:20 am. RD Dowell. WOC.

Day 2. 3/26/99. Current Depth: 1934'. Present Operations: Cleaning on bottom. Drilled in 24 hrs: 1664'. Total rotating hrs: 18-1/2 hours. Drilled from 261.5' to 1934' with 7-7/8" hammer bit#3. WOC. Break loose. Hook up BOP and manifold. Test BOP. Hook up blooie line. Prep to drill and rig in hole with 7-7/8" bit.5:00-6:00pm Drill 261.5'-410'. 6:00-5:45am Drill 410'-1730'. 5:45-7:00am Drill 1730'-1934'. **TD @ 7:00am on 3/26/99 @1934'.**

STATE OF UTAH
DIVISION OF OIL, GAS AND MINING

ENTITY ACTION FORM - FORM 6

OPERATOR River Gas Corporation
ADDRESS 1305 South 100 East
Price, UT 84501

OPERATOR ACCT. NO. 1605

| ACTION CODE | CURRENT ENTITY NO. | NEW ENTITY NO. | API NUMBER | WELL NAME | WELL LOCATION QQ | SC | TP | RG | COUNTY | SPUD DATE | EFFECTIVE DATE |
|---|---|---|---|---|---|---|---|---|---|---|---|
| B | 99999 | 11256 | 43-007-30514 | Utah 26-267 | SE/NW | 26 | 15S | 09E | Carbon | 3/19/99 | |
| WELL 1 COMMENTS: 990406 entity added; (Drunkards wash u/Fer."A-C") KDR CONFIDENTIAL | | | | | | | | | | | |
| B | 99999 | 11256 | 43-007-30452 | USA 30-289 | NW/NE | 30 | 15S | 10E | Carbon | 3/24/99 | |
| WELL 2 COMMENTS: 990406 entity added; (Drunkards wash u/Fer."A-C") KDR CONFIDENTIAL | | | | | | | | | | | |
| B | 99999 | 11256 | 43-007-30451 | USA 20-288 | NW/SW | 20 | 15S | 10E | Carbon | 3/26/99 | |
| WELL 3 COMMENTS: 990406 entity added; (Drunkards wash u/Fer."A-C") KDR CONFIDENTIAL | | | | | | | | | | | |
| A | | | | | | | | | | | |
| WELL 4 COMMENTS: | | | | | | | | | | | |
| A | | | | | | | | | | | |
| WELL 5 COMMENTS: | | | | | | | | | | | |

RECEIVED
APR 5 1999
DIV. OF OIL, GAS & MINING

ORIGINAL

CONFIDENTIAL

ACTION CODES (See Instructions on back of form)
- A - Establish new entity for new well (single well only)
- B - Add new well to existing entity (group or unit well)
- C - Re-assign well from one existing entity to another existing entity
- D - Re-assign well from one existing entity to a new entity
- E - Other (explain in comments section)

NOTE: Use COMMENT section to explain why each Action Code was selected.

Carmen J. Wilson
Signature

Administrative Assistant 3/29/99
Title Date

Phone No. (435) 637-8876

Form 3160-5
(June 1990)

UNITED STATES
DEPARTMENT OF THE INTERIOR
BUREAU OF LAND MANAGEMENT

FORM APPROVED
Budget Bureau No. 1004-0135
Expires: March 31, 1993

# SUNDRY NOTICES AND REPORTS ON WELLS

Do not use this form for proposals to drill or to deepen or reentry to a different reservoir.
Use "APPLICATION FOR PERMIT--" for such proposals

*SUBMIT IN TRIPLICATE*

5. Lease Designation and Serial No.
UTU-77354

6. If Indian, Allottee or Tribe Name
N/A

7. If Unit or CA, Agreement Designation
N/A

1. Type of Well
☐ Oil ☒ Gas ☐

8. Well Name and No.
USA 30-289

2. Name of Operator
River Gas Corporation

9. API Well No.
43-007-30452

3. Address and Telephone No.
1305 South 100 East Price, Utah 84501 (435)637-8876

10. Field and Pool, or Exploratory Area
undesignated

4. Location of Well (Footage, Sec.,T., R., M., or Survey Description)
1184' FNL, 1353' FEL
NW/4,NE/4,Sec.30, T15S,R10E, SLB&M

11. County or Parish, State
Carbon County, Utah

12. **CHECK APPROPRIATE BOX(s) TO INDICATE NATURE OF NOTICE, REPORT, OR OTHER DATA**

| TYPE OF SUBMISSION | TYPE OF ACTION | |
|---|---|---|
| ☐ Notice of Intent | ☒ Weekly Report | ☐ |
| ☐ Subsequent Report | ☐ Change of Name | ☐ Change of Plans |
| ☐ Final Abandonment Notice | ☐ Recompletion | ☐ New Construction |
| | ☐ Plugging Back | ☐ Non-Routine Fracturing |
| | ☐ Casing Repair | ☐ Water Shut-Off |
| | ☐ Altering Casing | ☐ Conversion to Injection |

13. Describe Proposed or Completed Operations ( Clearly state all pertinent details, and give pertinent dates, including estimated date of starting any proposed work. If well is directionally drilled, give subsurface locations and measured and true vertical depths for all markers and zones pertinent to this work.)*

See Attached

RECEIVED
APR 5 1999
DIV. OF OIL, GAS & MINING

COPY

CONFIDENTIAL

14. I hereby certify that the foregoing is true and correct

Signed Dawn Wilson Title Administrative Asst. Date 4/2/99

(This space for Federal or State office use)

Approved by _____ Title _____ Date _____
Conditions of approval, if any:

Title 18 U.S.C. Section 1001, makes it a crime for any person knowingly and willfully to make to any department or agency of the United States any false, fictitious or fraudulent statements or representations as to any matter within its jurisdiction.

* See Instructions on Reverse Side

DAILY WELL REPORT

River Gas Corporation
USA 30-289
1184' FNL, 1353' FEL
NW/4, NE/4, Sec.30,T15S,R10E
CARBON COUNTY, UTAH
SURVEYED ELEVATION:5799'
API# 43-007-30452
DRILLING CONTRACTOR: Pense Bros. Rig#11

PAGE 1

## DRILLING

Day 1. 3/25/99. Current Depth: 270'. Present Operations: WOC. Drilled in 24 hrs: 270'. Total rotating hrs: 4-1/2 hours. Drilled from 0' to 15' with 15" hammer bit#1. Drilled from 15' to 270' with 11" hammer bit#2. Finish moving and rig up on hole. **Spud at 10:30pm 3/24/99.** 10:00-11:00pm Drill conductor hole. 11:00-12:00am Set conductor 15' and nipple up to drill 11" hole. 12:00-4:00am Drill 270' of 11" hole and TOOH. 4:00-5:00am Run in hole with 261.5' of 8-5/8" casing. 5:00-6:00 RU Dowell and cement surface pipe. Close valve at 5:20 am. RD Dowell. WOC.

Day 2. 3/26/99. Current Depth: 1934'. Present Operations: Cleaning on bottom. Drilled in 24 hrs: 1664'. Total rotating hrs: 18-1/2 hours. Drilled from 261.5' to 1934' with 7-7/8" hammer bit#3. WOC. Break loose. Hook up BOP and manifold. Test BOP. Hook up blooie line. Prep to drill and rig in hole with 7-7/8" bit.5:00-6:00pm Drill 261.5'-410'. 6:00-5:45am Drill 410'-1730'. 5:45-7:00am Drill 1730'-1934'. **TD @ 7:00am on 3/26/99 @1934'.**

Day 3. 3/27/99. Circulate hole clean. TOOH. RU loggers. Log well. RD logger and release rig. RD drillers and move off. RU workover. Set racks. Unload and tally 5-1/2" casing. Run in hole with 44 joints of 5-1/2" casing and float shoe. Land casing at 1897.80'. Cement long string. RD cementers.

## COMPLETION

3/28/99. Lay down cement head. Change over to run tubing. ND BOP. Screw on tubing head. PU 4-3/4" bit and 4-3/4" casing scraper and 62 joints of 2-7/8" J-55 tubing. Tagged at 1892'. POOH and lay down tubing, scraper and bit. Change over to run casing. Pack out and RD..

Form 3160-5
(June 1990)

UNITED STATES
DEPARTMENT OF THE INTERIOR
BUREAU OF LAND MANAGEMENT

FORM APPROVED
Budget Bureau No. 1004-0135
Expires: March 31, 1993

# SUNDRY NOTICES AND REPORTS ON WELLS

Do not use this form for proposals to drill or to deepen or reentry to a different reservoir.
Use "APPLICATION FOR PERMIT--" for such proposals

*SUBMIT IN TRIPLICATE*

5. Lease Designation and Serial No.
UTU-77354

6. If Indian, Allottee or Tribe Name
N/A

7. If Unit or CA, Agreement Designation
N/A

1. Type of Well
☐ Oil ☒ Gas ☐

8. Well Name and No.
USA 30-289

2. Name of Operator
River Gas Corporation

9. API Well No.
43-007-30452

3. Address and Telephone No.
1305 South 100 East Price, Utah 84501 (435)637-8876

10. Field and Pool, or Exploratory Area
undesignated

4. Location of Well (Footage, Sec.,T., R., M., or Survey Description)
1184' FNL, 1353' FEL
NW/4,NE/4,Sec.30, T15S,R10E, SLB&M

11. County or Parish, State
Carbon County, Utah

12. **CHECK APPROPRIATE BOX(s) TO INDICATE NATURE OF NOTICE, REPORT, OR OTHER DATA**

| TYPE OF SUBMISSION | TYPE OF ACTION | |
|---|---|---|
| ☐ Notice of Intent | ☒ Weekly Report | ☐ |
| ☐ Subsequent Report | ☐ Change of Name | ☐ Change of Plans |
| ☐ Final Abandonment Notice | ☐ Recompletion | ☐ New Construction |
| | ☐ Plugging Back | ☐ Non-Routine Fracturing |
| | ☐ Casing Repair | ☐ Water Shut-Off |
| | ☐ Altering Casing | ☐ Conversion to Injection |

13. Describe Proposed or Completed Operations ( Clearly state all pertinent details, and give pertinent dates, including estimated date of starting any proposed work. If well is directionally drilled, give subsurface locations and measured and true vertical depths for all markers and zones pertinent to this work.)*

See Attached

RECEIVED
APR 9 1999
DIV. OF OIL, GAS & MINING

COPY

CONFIDENTIAL

14. I hereby certify that the foregoing is true and correct
Signed Dawn Wilson Title Administrative Asst. Date 4/2/99

(This space for Federal or State office use)

Approved by _____ Title _____ Date _____
Conditions of approval, if any:

Title 18 U.S.C. Section 1001, makes it a crime for any person knowingly and willfully to make to any department or agency of the United States any false, fictitious or fraudulent statements or representations as to any matter within its jurisdiction.

*** See Instructions on Reverse Side**

DAILY WELL REPORT

River Gas Corporation
USA 30-289
1184' FNL, 1353' FEL
NW/4, NE/4, Sec.30,T15S,R10E
CARBON COUNTY, UTAH
SURVEYED ELEVATION:5799'
API# 43-007-30452
DRILLING CONTRACTOR: Pense Bros. Rig#11

PAGE 1

**DRILLING**

Day 1. 3/25/99. Current Depth: 270'. Present Operations: WOC. Drilled in 24 hrs: 270'. Total rotating hrs: 4-1/2 hours. Drilled from 0' to 15' with 15" hammer bit#1. Drilled from 15' to 270' with 11" hammer bit#2. Finish moving and rig up on hole. **Spud at 10:30pm 3/24/99.** 10:00-11:00pm Drill conductor hole. 11:00-12:00am Set conductor 15' and nipple up to drill 11" hole. 12:00-4:00am Drill 270' of 11" hole and TOOH. 4:00-5:00am Run in hole with 261.5' of 8-5/8" casing. 5:00-6:00 RU Dowell and cement surface pipe. Close valve at 5:20 am. RD Dowell. WOC.

Day 2. 3/26/99. Current Depth: 1934'. Present Operations: Cleaning on bottom. Drilled in 24 hrs: 1664'. Total rotating hrs: 18-1/2 hours. Drilled from 261.5' to 1934' with 7-7/8" hammer bit#3. WOC. Break loose. Hook up BOP and manifold. Test BOP. Hook up blooie line. Prep to drill and rig in hole with 7-7/8" bit.5:00-6:00pm Drill 261.5'-410'. 6:00-5:45am Drill 410'-1730'. 5:45-7:00am Drill 1730'-1934'. **TD @ 7:00am on 3/26/99 @1934'.**

Day 3. 3/27/99. Circulate hole clean. TOOH. RU loggers. Log well. RD logger and release rig. RD drillers and move off. RU workover. Set racks. Unload and tally 5-1/2" casing. Run in hole with 44 joints of 5-1/2" casing and float shoe. Land casing at 1897.80'. Cement long string. RD cementers.

**COMPLETION**

3/28/99. Lay down cement head. Change over to run tubing. ND BOP. Screw on tubing head. PU 4-3/4" bit and 4-3/4" casing scraper and 62 joints of 2-7/8" J-55 tubing. Tagged at 1892'. POOH and lay down tubing, scraper and bit. Change over to run casing. Pack out and RD..

Form 3160-5
(June 1990)

UNITED STATES
DEPARTMENT OF THE INTERIOR
BUREAU OF LAND MANAGEMENT

FORM APPROVED
Budget Bureau No. 1004-0135
Expires: March 31, 1993

# SUNDRY NOTICES AND REPORTS ON WELLS

Do not use this form for proposals to drill or to deepen or reentry to a different reservoir.
Use "APPLICATION FOR PERMIT--" for such proposals

*SUBMIT IN TRIPLICATE*

5. Lease Designation and Serial No.
UTU-77354

6. If Indian, Allottee or Tribe Name
N/A

7. If Unit or CA, Agreement Designation
N/A

1. Type of Well
☐ Oil ☒ Gas ☐

CONFIDENTIAL

8. Well Name and No.
USA 30-289

2. Name of Operator
River Gas Corporation

9. API Well No.
43-007-30452

3. Address and Telephone No.
1305 South 100 East Price, Utah 84501 (435)637-8876

10. Field and Pool, or Exploratory Area
undesignated

4. Location of Well (Footage, Sec.,T., R:, M., or Survey Description)
1184' FNL, 1353' FEL
NW/4 NE/4,Sec.30, T15S,R10E, SLB&M

11. County or Parish, State
Carbon County, Utah

12. **CHECK APPROPRIATE BOX(s) TO INDICATE NATURE OF NOTICE, REPORT, OR OTHER DATA**

| TYPE OF SUBMISSION | TYPE OF ACTION | |
|---|---|---|
| ☐ Notice of Intent | ☒ Weekly Report | ☐ |
| ☒ Subsequent Report | ☐ Change of Name | ☐ Change of Plans |
| ☐ Final Abandonment Notice | ☐ Recompletion | ☐ New Construction |
| | ☐ Plugging Back | ☐ Non-Routine Fracturing |
| | ☐ Casing Repair | ☐ Water Shut-Off |
| | ☐ Altering Casing | ☐ Conversion to Injection |

13. Describe Proposed or Completed Operations ( Clearly state all pertinent details, and give pertinent dates, including estimated date of starting any proposed work. If well is directionally drilled, give subsurface locations and measured and true vertical depths for all markers and zones pertinent to this work.)*

See Attached

COPY

RECEIVED
MAY 12 1999
DIV. OF OIL, GAS & MINING

CONFIDENTIAL

14. I hereby certify that the foregoing is true and correct

Signed Dawn Wilson Title Administrative Assistant Date 5/7/99

(This space for Federal or State office use)

Approved by _____ Title _____ Date _____
Conditions of approval, if any:

Title 18 U.S.C. Section 1001, makes it a crime for any person knowingly and willfully to make to any department or agency of the United States any false, fictitious or fraudulent statements or representations as to any matter within its jurisdiction.

* See Instructions on Reverse Side

DAILY WELL REPORT

River Gas Corporation
USA 30-289
1184' FNL, 1353' FEL
NW/4, NE/4, Sec.30,T15S,R10E
CARBON COUNTY, UTAH
SURVEYED ELEVATION:5799'
API# 43-007-30452
DRILLING CONTRACTOR: Pense Bros. Rig#11

PAGE 1

**DRILLING**

Day 1. 3/25/99. Current Depth: 270'. Present Operations: WOC. Drilled in 24 hrs: 270'. Total rotating hrs: 4-1/2 hours. Drilled from 0' to 15' with 15" hammer bit#1. Drilled from 15' to 270' with 11" hammer bit#2. Finish moving and rig up on hole. **Spud at 10:30pm 3/24/99.** 10:00-11:00pm Drill conductor hole. 11:00-12:00am Set conductor 15' and nipple up to drill 11" hole. 12:00-4:00am Drill 270' of 11" hole and TOOH. 4:00-5:00am Run in hole with 261.5' of 8-5/8" casing. 5:00-6:00 RU Dowell and cement surface pipe. Close valve at 5:20 am. RD Dowell. WOC.

Day 2. 3/26/99. Current Depth: 1934'. Present Operations: Cleaning on bottom. Drilled in 24 hrs: 1664'. Total rotating hrs: 18-1/2 hours. Drilled from 261.5' to 1934' with 7-7/8" hammer bit#3. WOC. Break loose. Hook up BOP and manifold. Test BOP. Hook up blooie line. Prep to drill and rig in hole with 7-7/8" bit.5:00-6:00pm Drill 261.5'-410'. 6:00-5:45am Drill 410'-1730'. 5:45-7:00am Drill 1730'-1934'. **TD @ 7:00am on 3/26/99 @1934'.**

Day 3. 3/27/99. Circulate hole clean. TOOH. RU loggers. Log well. RD logger and release rig. RD drillers and move off. RU workover. Set racks. Unload and tally 5-1/2" casing. Run in hole with 44 joints of 5-1/2" casing and float shoe. Land casing at 1897.80'. Cement long string. RD cementers.

**COMPLETION**

3/28/99. Lay down cement head. Change over to run tubing. ND BOP. Screw on tubing head. PU 4-3/4" bit and 4-3/4" casing scraper and 62 joints of 2-7/8" J-55 tubing. Tagged at 1892'. POOH and lay down tubing, scraper and bit. Change over to run casing. Pack out and RD.

5/2/99. Rig up Halliburton and Dowell. Perforate and frac three zones.
Zone 1. 1690'-95', 1697'-1702'
Zone 2. 1618'-22', 1658'-60', 1671'-75'
Zone 3. 1554'-64', 1568'-72', 1578'-80'
**Extra Costs to heat frac tanks:**

5/2/99. Moved rig in. Rig up pump, tank and rig. Spot tubing trailer and tally. Trip in hole with catch tool. Tag sand at 1595'. Wash to plug at 1600'. Pull plug. Trip out. Laid down plug. Closed well in.

DAILY WELL REPORT

River Gas Corporation
USA 30-289
1184' FNL, 1353' FEL
NW/4, NE/4, Sec.30,T15S,R10E
CARBON COUNTY, UTAH
SURVEYED ELEVATION:5799'
API# 43-007-30452
DRILLING CONTRACTOR: Pense Bros. Rig#11

PAGE 2

5/3/99. Trip in hole with catch tool. Tag sand at 1679'. Waash to plug at 1684'. Pull plug. Trip out. Laid down plug. Made up notch collar. Trip in hole. Tag sand at 1852'. Wash to TD at 1896.95'. Circulated well clean. Trip out. Made up mud anchor and perf sub 2-7/8"x4' and seating nipple. Trip in hole. Nipple down BOP. Made up tubing head. Trip in hole with pump and rods. Spaced out pump. Rig down rig, pump and tanks. Moved rig.
57 joints to S/N at 1748.02' and 1 joint mud anchor Total joints 58
EOT 1784.95' 112 feet of rat hole
29x7/8" rods
40x3/4 rods and 1- 1-1/2"x22 ft polish rod and 1- 2'x7/8, 1- 8'x7/8 subs
1- H/F 2-1/2"x2"x16' RWAC Top H/D Pump

FORM 9

STATE OF UTAH

DIVISION OF OIL, GAS AND MINING

ORIGINAL CONFIDENTIAL

# SUNDRY NOTICES AND REPORTS ON WELLS

Do not use this form for proposals to drill new wells, deepen existing wells, or to reenter plugged and abandoned wells.
Use APPLICATION FOR PERMIT TO DRILL OR DEEPEN form for such proposals.

5. Lease Designation and Serial Number: U - 77354

6. If Indian, Allottee or Tribe Name: N/A

7. Unit Agreement Name: UTU67921X Drunkards Wash

8. Well Name and Number: USA 30-289

9. API Well Number: 43-007-30452

10. Field or Pool, or Wildcat: Drunkards Wash

1. Type of Well: OIL ☐ GAS ☒ OTHER:

2. Name of Operator: River Gas Corporation

3. Address and Telephone Number: 1305 South 100 East, Price, UT 84501 (435) 637-8876

4. Location of Well
Footages: 1184' FNL, 1353' FEL
QQ, Sec., T., R., M.: NW/NE SEC. 30, T15S, R10E, SLB & M
County: Carbon County
State: Utah

11. **CHECK APPROPRIATE BOXES TO INDICATE NATURE OF NOTICE, REPORT, OR OTHER DATA**

**NOTICE OF INTENT**
(Submit in Duplicate)

- ☐ Abandon
- ☐ Repair Casing
- ☐ Change of Plans
- ☐ Convert to Injection
- ☐ Fracture Treat or Acidize
- ☐ Multiple Completion
- ☐ New Construction
- ☐ Pull or Alter Casing
- ☐ Recomplete
- ☐ Reperforate
- ☐ Vent or Flare
- ☐ Water Shut-Off
- ☐ Other _____

Approximate date work will start _____

**SUBSEQUENT REPORT**
(Submit Original Form Only)

- ☐ Abandon *
- ☐ Repair Casing
- ☐ Change of Plans
- ☐ Convert to Injection
- ☐ Fracture Treat or Acidize
- ☒ Other Online Notice
- ☐ New Construction
- ☐ Pull or Alter Casing
- ☐ Reperforate
- ☐ Vent or Flare
- ☐ Water Shut-Off

Date of work completion May 10, 1999

Report results of Multiple Completions and Recompletions to different reservoirs on WELL COMPLETION OR RECOMPLETION REPORT AND LOG form.

* Must be accompanied by a cement verification report.

12. DESCRIBE PROPOSED OR COMPLETED OPERATIONS (Clearly state all pertinent details, and give pertinent dates. If well is directionally drilled, give subsurface locations and measured and true vertical depths for all markers and zones pertinent to this work.)

Please be advised that the above referenced well was placed online and showed first production on 05/10/99.

13.

Name & Signature: Rochelle Crabtree Rochelle Crabtree Title: Administrative Asst. - Production Date: 08/03/99

(This space for state use only)

(4/94)

(See Instructions on Reverse Side)

Form 3160-5
(June 1990)

UNITED STATES
DEPARTMENT OF THE INTERIOR
BUREAU OF LAND MANAGEMENT

ORIGINAL

FORM APPROVED
Budget Bureau No. 1004-0135
Expires: March 31, 1993

# SUNDRY NOTICES AND REPORTS ON WELLS

Do not use this form for proposals to drill or to deepen or reentry to a different reservoir.
Use "APPLICATION FOR PERMIT--" for such proposals

*SUBMIT IN TRIPLICATE*

CONFIDENTIAL

5. Lease Designation and Serial No.
U - 77354

6. If Indian, Allottee or Tribe Name
N/A

7. If Unit or CA, Agreement Designation
Drunkards Wash UTU67921X

1. Type of Well
☐ Oil ☒ Gas ☐

8. Well Name and No.
USA 30-289

2. Name of Operator
River Gas Corporation

9. API Well No.
43-007-30452

3. Address and Telephone No.
1305 South 100 East Price, Utah 84501 (435)637-8876

10. Field and Pool, or Exploratory Area
Drunkards Wash

4. Location of Well (Footage, Sec.,T., R:, M., or Survey Description)
1184' FNL, 1353' FEL
NW/NE Sec. 30, T15S, R10E, SLB&M

11. County or Parish, State
Carbon County, Utah

12. **CHECK APPROPRIATE BOX(s) TO INDICATE NATURE OF NOTICE, REPORT, OR OTHER DATA**

| TYPE OF SUBMISSION | TYPE OF ACTION | |
|---|---|---|
| ☐ Notice of Intent | ☒ Online Notice | ☐ Pipeline,Powerline, Maintenance Corridor Construction |
| ☒ Subsequent Report | ☐ Change of Name | ☐ Change of Plans |
| ☐ Final Abandonment Notice | ☐ Recompletion | ☐ New Construction |
| | ☐ Plugging Back | ☐ Non-Routine Fracturing |
| | ☐ Casing Repair | ☐ Water Shut-Off |
| | ☐ Altering Casing | ☐ Conversion to Injection |

13. Describe Proposed or Completed Operations ( Clearly state all pertinent details, and give pertinent dates, including estimated date of starting any proposed work. If well is directionally drilled, give subsurface locations and measured and true vertical depths for all markers and zones pertinent to this work.)*

Please be advised that the above referenced well was placed online and showed forst production on 05/10/99.

14. I hereby certify that the foregoing is true and correct

Signed Rochelle Crabtree Title Administrative Asst. - Production Date August 06, 1999

(This space for Federal or State office use)

Approved by _____ Title _____ Date _____
Conditions of approval, if any:

Title 18 U.S.C. Section 1001, makes it a crime for any person knowingly and willfully to make to any department or agency of the United States any false, fictitious or fraudulent statements or representations as to any matter within its jurisdiction.

*** See Instructions on Reverse Side**

Form 3160-5
(June 1990)

UNITED STATES
DEPARTMENT OF THE INTERIOR
BUREAU OF LAND MANAGEMENT

ORIGINAL COPY

FORM APPROVED
Budget Bureau No. 1004-0135
Expires: March 31, 1993

## SUNDRY NOTICES AND REPORTS ON WELLS

Do not use this form for proposals to drill or to deepen or reentry to a different reservoir.
Use "APPLICATION FOR PERMIT--" for such proposals

*SUBMIT IN TRIPLICATE*

CONFIDENTIAL

5. Lease Designation and Serial No.
UTU - 77354

6. If Indian, Allottee or Tribe Name
N/A

7. If Unit or CA, Agreement Designation
Drunkards Wash UTU-67921X

1. Type of Well
☐ Oil ☒ Gas ☐

8. Well Name and No.
USA 30-289

2. Name of Operator
River Gas Corporation

9. API Well No.
43-~~015~~ 007-30452

3. Address and Telephone No.
1305 South 100 East Price, Utah 84501 (435)637-8876

10. Field and Pool, or Exploratory Area
Drunkards Wash

4. Location of Well (Footage, Sec.,T., R:, M., or Survey Description)
1184' FNL, 1353' FEL
NW/NE, Sec. 30, T15S, R10E, SLB&M

11. County or Parish, State
Carbon County, Utah

12. **CHECK APPROPRIATE BOX(s) TO INDICATE NATURE OF NOTICE, REPORT, OR OTHER DATA**

| TYPE OF SUBMISSION | TYPE OF ACTION | |
|---|---|---|
| ☐ Notice of Intent | ☐ Online Notice | ☐ Change of Plans |
| ☐ Subsequent Report | ☐ Change of Name | ☐ New Construction |
| ☐ Final Abandonment Notice | ☐ Recompletion | ☐ Non-Routine Fracturing |
| | ☐ Plugging Back | ☐ Water Shut-Off |
| | ☐ Casing Repair | ☐ Conversion to Injection |
| | ☐ Altering Casing | ☐ Dispose Water |
| | ☒ Other Chemical/Flush Treatment | |

13. Describe Proposed or Completed Operations ( Clearly state all pertinent details, and give pertinent dates, including estimated date of starting any proposed work. If well is directionally drilled, give subsurface locations and measured and true vertical depths for all markers and zones pertinent to this work.)*

Please be advised that the above referenced well was chemically treated with 4000 gallons of low Ph fluid and 250 gallons of 7 1/2% HCL on 9/28/99.

OCT 15 1999

14. I hereby certify that the foregoing is true and correct

Signed Rochelle Crabtree Title Administrative Assistant - Production Date October 07, 1999

(This space for Federal or State office use)

Approved by _____ Title _____ Date _____

Conditions of approval, if any:

WTC 12-14-99

Title 18 U.S.C. Section 1001, makes it a crime for any person knowingly and willfully to make to any department or agency of the United States any false, fictitious or fraudulent statements or representations as to any matter within its jurisdiction.

* See Instructions on Reverse Side

RECEIVED AUG 13 1999 DIV. OF OIL, GAS & MINING

Form 3160-4 (November 1983) (formerly 3-330)

UNITED STATES DEPARTMENT OF THE INTERIOR

ORIGINAL

Form approved. Budget Bureau No. 1004-0137 Expires August 31, 1985

# WELL COMPLETION OR RECOMPLETION REPORT AND LOG*

CONFIDENTIAL

1a. TYPE OF WELL: OIL WELL ☐ GAS WELL ☒ DRY ☐ Other

b. TYPE OF COMPLETION: NEW WELL ☒ WORK OVER ☐ DEEP-EN ☐ PLUG BACK ☐ DIFF. RESVR. ☐ Other

2. NAME OF OPERATOR: River Gas Corporation

3. ADDRESS OF OPERATOR: 1305 South 100 East, Price, UT 84501(435)637-8876

4. LOCATION OF WELL (Report location clearly and in accordance with any State requirements)

At surface: 1184' FNL, 1353' FEL

At top prod. interval reported below

At total depth

5. LEASE DESIGNATION AND SERIAL NO.: UTU-77354

6. IF INDIAN, ALLOTTEE OR TRIBE NAME: N/A

7. UNIT AGREEMENT NAME: Drunkards Wash UTU-67921X

8. FARM OR LEASE NAME: USA

9. WELL NO.: 30-289

10. FIELD AND POOL, OR WILDCAT: Drunkards Wash

11. SEC., T., R., M., OR BLOCK AND SURVEY OR AREA: NW/NE, Sec. 30, T15S, R10E, SLB&M

14. PERMIT NO.: 43-007-30452 DATE ISSUED: 6/23/98

12. COUNTY: Carbon 13. STATE: UTAH

15. DATE SPUDDED: 03/24/99 16. DATE T.D. REACHED: 3/26/99 17. DATE COMPL. (Ready to prod.): 05/11/99 18. ELEVATIONS (DF, REB, RT, GR, ETC.): 5799'GR 19. ELEV. CASINGHEAD: N/A

20. TOTAL DEPTH, MD & TVD: 1934' 21. PLUG BACK T.D., MD & TVD: 1897' 22. IF MULTIPLE COMPL., HOW MANY: N/A 23. INTERVALS DRILLED BY → ROTARY TOOLS: to TD CABLE TOOLS: —

24. PRODUCING INTERVAL(S), OF THIS COMPLETION--TOP, BOTTOM, NAME (MD OR TVD): Ferron Coal- Top Coal 1554' & Bottom Coal 1702'

25. WAS DIRECTIONAL SURVEY MADE: NO

26. TYPE ELECTRIC AND OTHER LOGS RUN: Dual Induct.Laterolog,CBL, Spect.Litho Dens.Comp.Neut.GR log 3-29-99

27. WAS WELL CORED: No

28. CASING RECORD (Report all strings set in well)

| CASING SIZE | WEIGHT, LB./FT. | DEPTH SET (MD) | HOLE SIZE | CEMENT RECORD | AMOUNT PULLED |
|---|---|---|---|---|---|
| 12-3/4" | Conductor PE | 15' | 15" | | |
| 8-5/8" | 24# | 262' | 11" | 100 sksG+2%CaCl+1/4#sk celloflake | |
| 5-1/2" | 17# | 1897 | 7-7/8" | 165 sks50/50poz+8%gel+10%extender+2%CaCl | |
| | | | | 54 sks' 10-1 RFC (thixotropic) | |

29. LINER RECORD

| SIZE | TOP (MD) | BOTTOM (MD) | SACKS CEMENT | SCREEN (MD) |
|---|---|---|---|---|
| | | | | |

30. TUBING RECORD

| SIZE | DEPTH SET (MD) | PACKER SET (MD) |
|---|---|---|
| 2-7/8" | 1779' | |

31. PERFORATION RECORD (Interval, size and number)

1) 1554'-64',1568'-72',1578'-80'
2) 1618'-22',1658'-60',1671'-75'
3) 1690'-95',1697'-1702'

32. ACID, SHOT, FRACTURE, CEMENT SQUEEZE, ETC.

| DEPTH INTERVAL (MD) | AMOUNT AND KIND OF MATERIAL USED |
|---|---|
| Upper 1554'-1580' | 98,400# 16/30; 34,860 gal fluid |
| Middle 1618'-1675' | 85,000# 16/30; 34,860 gal fluid |
| Lower 1690'-1702' | 65,300# 16/30; 30,702 gal fluid |

33. PRODUCTION

DATE FIRST PRODUCTION: 5/10/99 PRODUCTION METHOD (Flowing, gas lift, pumping—size and type of pump): Pumping 2-1/2x2x16 RWAC WELL STATUS (Producing or shut-in): Producing

| DATE OF TEST | HOURS TESTED | CHOKE SIZE | PROD'N. FOR TEST PERIOD → | OIL—BBL. | GAS—MCF. | WATER—BBL. | GAS-OIL RATIO |
|---|---|---|---|---|---|---|---|
| 5/10/99 | 24 | N/A | | N/A | 26 | 198 | N/A |

| FLOW. TUBING PRESS. | CASING PRESSURE | CALCULATED 24-HOUR RATE → | OIL—BBL. | GAS—MCF. | WATER—BBL. | OIL GRAVITY - API (CORR.) |
|---|---|---|---|---|---|---|
| 41 | 39 | | N/A | 26 | 198 | N/A |

34. DISPOSITION OF GAS (Sold, used for fuel, vented, etc.): Sold TEST WITNESSED BY: Jerry Dietz

35. LIST OF ATTACHMENTS

36 I hereby certify that the foregoing and attached information is complete and correct as determined from all available records

SIGNED Callen Hurtt TITLE Petroleum Engineer DATE August 06, 1999

See Spaces for Additional Data on Reverse Side

WELL NUMBER: USA 30-289

37 SUMMARY OF POROUS ZONES: (Show all important zones of porosity and contents thereof; cored intervals; and all drill-stem, tests, including depth interval tested, cushion used, time tool open, flowing and shut-in pressures, and recoveries):

| FORMATION | TOP | BOTTOM | DESCRIPTION, CONTENTS, ETC. |
|---|---|---|---|
| Ferron | 1691' | 1700' | Coals and sandstones<br><br>Coal Interval: 1691'-1700' |

38. GEOLOGIC MARKERS

| NAME | TOP MEAS.DEPTH | TOP TRUE VERT. DEPTH |
|---|---|---|
| Blue Gate Bentonite | 1403' | |
| Tununk Shale | 1800' | |

Form 3160-4
(November 1983)
(formerly 9-330)

UNITED STATES
DEPARTMENT OF THE INTERIOR
BUREAU OF LAND MANAGEMENT
AMENDED

ORIGINAL COPY

SUBMIT IN DUPLICATE (See other instructions on reverse side)

Form approved.
Budget Bureau No.1004-0137
Expires August 31,1985

# WELL COMPLETION OR RECOMPLETION REPORT AND LOG*

1a. TYPE OF WELL: OIL WELL ☐ GAS WELL ☒ DRY ☐ Other

b. TYPE OF COMPLETION: NEW WELL ☒ WORK OVER ☐ DEEP-EN ☐ PLUG BACK ☐ DIFF. RESVR. ☐ Other

CONFIDENTIAL

2. NAME OF OPERATOR: River Gas Corporation

3. ADDRESS OF OPERATOR: 1305 South 100 East, Price, UT 84501(435)637-8876

4. LOCATION OF WELL *(Report location clearly and in accordance with any State requirements)*

At surface: 1184' FNL, 1353' FEL

At top prod. interval reported below

At total depth

5. LEASE DESIGNATION AND SERIAL NO.: UTU-77354

6. IF INDIAN, ALLOTTEE OR TRIBE NAME: N/A

7. UNIT AGREEMENT NAME: Drunkards Wash UTU-67921X

8. FARM OR LEASE NAME: USA

9. WELL NO.: 30-289

10. FIELD AND POOL, OR WILDCAT: Drunkards Wash

11. SEC., T., R., M., OR BLOCK AND SURVEY OR AREA: NW/NE, Sec. 30,T15S,R10E,SLB&M

| 14. PERMIT NO. | DATE ISSUED | 12. COUNTY | 13. STATE |
|---|---|---|---|
| 43-007-30452 | 6/23/98 | Carbon | UTAH |

| 15. DATE SPUDDED | 16. DATE T.D. REACHED | 17. DATE COMPL. *(Ready to prod.)* | 18. ELEVATIONS (DF, REB, RT, GR, ETC.) | 19. ELEV. CASINGHEAD |
|---|---|---|---|---|
| 03/24/99 | 3/26/99 | 05/11/99 | 5799'GR | N/A |

| 20. TOTAL DEPTH, MD & TVD | 21. PLUG BACK T.D., MD & TVD | 22. IF MULTIPLE COMPL., HOW MANY | 23. INTERVALS DRILLED BY | ROTARY TOOLS | CABLE TOOLS |
|---|---|---|---|---|---|
| 1934' | 1897' | N/A | → | to TD | — |

24. PRODUCING INTERVAL(S), OF THIS COMPLETION--TOP, BOTTOM, NAME (MD OR TVD)

Ferron Coal- Top Coal 1554' & Bottom Coal 1702'

25. WAS DIRECTIONAL SURVEY MADE: NO

26. TYPE ELECTRIC AND OTHER LOGS RUN

Dual Induct.Laterolog,CBL, Spect.Litho Dens.Comp.Neut.GR log

27. WAS WELL CORED: No

28. CASING RECORD *(Report all strings set in well)*

| CASING SIZE | WEIGHT, LB./FT. | DEPTH SET (MD) | HOLE SIZE | CEMENT RECORD | AMOUNT PULLED |
|---|---|---|---|---|---|
| 12-3/4" | Conductor PE | 15' | 15" | | |
| 8-5/8" | 24# | 262' | 11" | 100 sksG+2%CaCl+1/4#sk celloflake | |
| 5-1/2" | 17# | 1898' | 7-7/8" | 165 sks50/50 poz, 8% Gel, 10% extender, 2%CaCl | |
| | | | | 54 sks" 10-1 RFC (thixotropic) | |

29. LINER RECORD

| SIZE | TOP (MD) | BOTTOM (MD) | SACKS CEMENT | SCREEN (MD) |
|---|---|---|---|---|
| | | | | |
| | | | | |

30. TUBING RECORD

| SIZE | DEPTH SET (MD) | PACKER SET (MD) |
|---|---|---|
| 2-7/8" | 1785' | |

31. PERFORATION RECORD *(Interval, size and number)*

1) 1554'-64',1568'-72',1578'-80'
2) 1618'-22',1658'-60',1671'-75'
3) 1690'-95',1697'-1702'

CONFIDENTIAL PERIOD EXPIRED ON 6-11-00

32. ACID, SHOT, FRACTURE, CEMENT SQUEEZE,ETC.

| DEPTH INTERVAL (MD) | AMOUNT AND KIND OF MATERIAL USED |
|---|---|
| Upper 1554'-1580' | 98,400# 16/30; 34,860 gal fluid |
| Middle 1618'-1675' | 85,000# 16/30; 34,860 gal fluid |
| Lower 1690'-1702' | 65,300# 16/30; 30,702 gal fluid |

33. PRODUCTION

| DATE FIRST PRODUCTION | PRODUCTION METHOD *(Flowing, gas lift, pumping—size and type of pump)* | WELL STATUS *(Producing or shut-in)* |
|---|---|---|
| 5/10/99 | Pumping 2-1/2x2x16 RWAC | Producing |

| DATE OF TEST | HOURS TESTED | CHOKE SIZE | PROD'N. FOR TEST PERIOD | OIL—BBL. | GAS—MCF. | WATER—BBL. | GAS-OIL RATIO |
|---|---|---|---|---|---|---|---|
| 5/10/99 | 24 | N/A | → | N/A | 26 | 198 | N/A |

| FLOW. TUBING PRESS. | CASING PRESSURE | CALCULATED 24-HOUR RATE | OIL—BBL. | GAS—MCF. | WATER—BBL. | OIL GRAVITY - API (CORR.) |
|---|---|---|---|---|---|---|
| 41 | 39 | → | N/A | 26 | 198 | N/A |

34. DISPOSITION OF GAS (Sold,used for fuel, vented, etc.): SOLD

TEST WITNESSED BY: Jerry H. Dietz

35. LIST OF ATTACHMENTS

OCT 15 1999

36 I hereby certify that the foregoing and attached information is complete and correct as determined from all available records

SIGNED Rochelle Crabtree TITLE Administrative Assistant - Production DATE October 07, 1999

See Spaces for Additional Data on Reverse Side

WELL NUMBER: USA 30-289

| 37 SUMMARY OF POROUS ZONES: (Show all important zones of porosity and contents thereof; cored intervals; and all drill-stem, tests, including depth interval tested, cushion used, time tool open, flowing and shut-in pressures, and recoveries): | | | | 38. GEOLOGIC MARKERS | | |
|---|---|---|---|---|---|---|
| FORMATION | TOP | BOTTOM | DESCRIPTION, CONTENTS, ETC. | NAME | TOP MEAS.DEPTH | TRUE VERT. DEPTH |
| Ferron | 1691' | 1700' | Coals and Sandstones<br><br>Coal Interval: 1691'-1700' | Blue Gate Bentonite | 1403' | |
| | | | | Tununk Shale | 1800' | |

FORM 9

STATE OF UTAH

DIVISION OF OIL, GAS AND MINING

ORIGINAL

# SUNDRY NOTICES AND REPORTS ON WELLS

Do not use this form for proposals to drill new wells, deepen existing wells, or to reenter plugged and abandoned wells.
Use APPLICATION FOR PERMIT TO DRILL OR DEEPEN form for such proposals.

5. Lease Designation and Serial Number: U - 77354

6. If Indian, Allottee or Tribe Name: N/A

7. Unit Agreement Name: UTU67921X Drunkards Wash

1. Type of Well: OIL ☐ GAS ☒ OTHER:

8. Well Name and Number: USA 30-289

2. Name of Operator: River Gas Corporation

9. API Well Number: 43-007-30452

3. Address and Telephone Number: 6825 South 5300 West, P.O. Box 851, Price, UT 84501 (435) 613-9777

10. Field or Pool, or Wildcat: Drunkards Wash

4. Location of Well
Footages: County: 1184' FNL, 1353' FEL — Carbon County
QQ, Sec., T., R., M.: State: NW/NE SEC. 30, T15S, R10E, SLB & M — Utah

## 11. CHECK APPROPRIATE BOXES TO INDICATE NATURE OF NOTICE, REPORT, OR OTHER DATA

**NOTICE OF INTENT**
(Submit in Duplicate)

- ☐ Abandon
- ☐ Repair Casing
- ☐ Change of Plans
- ☐ Convert to Injection
- ☐ Fracture Treat or Acidize
- ☐ Multiple Completion
- ☐ Other
- ☐ New Construction
- ☐ Pull or Alter Csg
- ☐ Recomplete
- ☐ Reperforate
- ☐ Vent or Flare
- ☐ Water Shut-Off

Approximate date work will start _____

**SUBSEQUENT REPORT**
(Submit Original Form Only)

- ☐ Abandon *
- ☐ Repair Casing
- ☐ Change of Plans
- ☐ Convert to Injection
- ☐ Fracture Treat or Acidize
- ☒ Other Chemical/Flush Treatment
- ☐ New Construction
- ☐ Pull or Alter Csg
- ☐ Reperforate
- ☐ Vent or Flare
- ☐ Water Shut-Off

Date of work completion 04/18/2000

Report results of Multiple Completions and Recompletions to different reservoirs on WELL COMPLETION OR RECOMPLETION REPORT AND LOG form.

* Must be accompanied by a cement verification report.

12. DESCRIBE PROPOSED OR COMPLETED OPERATIONS (Clearly state all pertinent details, and give pertinent dates. If well is directionally drilled, give subsurface locations and measured and true vertical depths for all markers and zones pertinent to this work.)

Please be advised that the above referenced well was chemically treated with 4000 gallons of low Ph fluid and 250 gallons of 7 1/2% HCL on 04/18/00.

RECEIVED
JUL 03 2000
DIVISION OF
OIL, GAS AND MINING

13.

Name & Signature: Rochelle Crabtree Rochelle Crabtree Title: Administrative Assistant Date: 06/28/2000

(This space for state use only)

(4/94) (See Instructions on Reverse Side)

FORM 9

STATE OF UTAH

DIVISION OF OIL, GAS AND MINING

COPY

# SUNDRY NOTICES AND REPORTS ON WELLS

Do not use this form for proposals to drill new wells, deepen existing wells, or to reenter plugged and abandoned wells.
Use APPLICATION FOR PERMIT TO DRILL OR DEEPEN form for such proposals.

5. Lease Designation and Serial Number: U - 77354

6. If Indian, Allottee or Tribe Name: N/A

7. Unit Agreement Name: UTU67921X Drunkards Wash

1. Type of Well: OIL ☐ GAS ☒ OTHER:

8. Well Name and Number: USA 30-289

2. Name of Operator: River Gas Corporation

9. API Well Number: 43-007-30452

3. Address and Telephone Number: 6825 South 5300 West, P.O. Box 851, Price, UT 84501 (435) 613-9777

10. Field or Pool, or Wildcat: Drunkards Wash

4. Location of Well
Footages: County: 1184' FNL, 1353' FEL — Carbon County
QQ, Sec., T., R., M.: State: NW/NE SEC. 30, T15S, R10E, SLB & M — Utah

## 11. CHECK APPROPRIATE BOXES TO INDICATE NATURE OF NOTICE, REPORT, OR OTHER DATA

**NOTICE OF INTENT**
(Submit in Duplicate)

- ☐ Abandon
- ☐ Repair Casing
- ☐ Change of Plans
- ☐ Convert to Injection
- ☐ Fracture Treat or Acidize
- ☐ Multiple Completion
- ☐ Other
- ☐ New Construction
- ☐ Pull or Alter Csg
- ☐ Recomplete
- ☐ Reperforate
- ☐ Vent or Flare
- ☐ Water Shut-Off

Approximate date work will start _____

**SUBSEQUENT REPORT**
(Submit Original Form Only)

- ☐ Abandon *
- ☐ Repair Casing
- ☐ Change of Plans
- ☐ Convert to Injection
- ☐ Fracture Treat or Acidize
- ☒ Other Chemical/Flush Treatment
- ☐ New Construction
- ☐ Pull or Alter Csg
- ☐ Reperforate
- ☐ Vent or Flare
- ☐ Water Shut-Off

Date of work completion 04/18/2000

Report results of Multiple Completions and Recompletions to different reservoirs on WELL COMPLETION OR RECOMPLETION REPORT AND LOG form.

* Must be accompanied by a cement verification report.

12. DESCRIBE PROPOSED OR COMPLETED OPERATIONS (Clearly state all pertinent details, and give pertinent dates. If well is directionally drilled, give subsurface locations and measured and true vertical depths for all markers and zones pertinent to this work.)

Please be advised that the above referenced well was chemically treated with 4000 gallons of low Ph fluid and 250 gallons of 7 1/2% HCL on 04/18/00.

RECEIVED
JUL 11 2000
DIVISION OF
OIL, GAS AND MINING

13.

Name & Signature: Rochelle Crabtree *Rochelle Crabtree* Title: Administrative Assistant Date: 06/28/2000

(This space for state use only)

Accepted by the
Utah Division of
Oil, Gas and Mining

FOR RECORD ONLY

WTC

(4/94) (See Instructions on Reverse Side)

FORM 9

STATE OF UTAH

DIVISION OF OIL, GAS AND MINING

# SUNDRY NOTICES AND REPORTS ON WELLS

Do not use this form for proposals to drill new wells, deepen existing wells, or to reenter plugged and abandoned wells.
Use APPLICATION FOR PERMIT TO DRILL OR DEEPEN form for such proposals.

5. Lease Designation and Serial Number:

6. If Indian, Allottee or Tribe Name:

7. Unit Agreement Name:

8. Well Name and Number:

9. API Well Number:

10. Field or Pool, or Wildcat:

1. Type of Well: OIL ☐ GAS ☒ OTHER:

2. Name of Operator: River Gas Corporation

3. Address and Telephone Number: 6825 S. 5300 W. P.O. Box 851 Price, Utah 84501 (435) 613-9777

4. Location of Well Footages:

QQ, Sec., T., R., M.: SLB & M

County: Carbon County

State: Utah

11. **CHECK APPROPRIATE BOXES TO INDICATE NATURE OF NOTICE, REPORT, OR OTHER DATA**

**NOTICE OF INTENT**
(Submit in Duplicate)

- ☐ Abandon
- ☐ Repair Casing
- ☐ Change of Plans
- ☐ Convert to Injection
- ☐ Fracture Treat or Acidize
- ☐ Multiple Completion
- ☐ New Construction
- ☐ Pull or Alter Casing
- ☐ Recomplete
- ☐ Reperforate
- ☐ Vent or Flare
- ☐ Water Shut-Off
- ☒ Other Change of Operator

Approximate date work will start _____

**SUBSEQUENT REPORT**
(Submit Original Form Only)

- ☐ Abandon *
- ☐ Repair Casing
- ☐ Change of Plans
- ☐ Convert to Injection
- ☐ Fracture Treat or Acidize
- ☐ Other _____
- ☐ New Construction
- ☐ Pull or Alter Casing
- ☐ Reperforate
- ☐ Vent or Flare
- ☐ Water Shut-Off

Date of work completion _____

Report results of Multiple Completions and Recompletions to different reservoirs on WELL COMPLETION OR RECOMPLETION REPORT AND LOG form.

* Must be accompanied by a cement verification report.

12. DESCRIBE PROPOSED OR COMPLETED OPERATIONS (Clearly state all pertinent details, and give pertinent dates. If well is directionally drilled, give subsurface locations and measured and true vertical depths for all markers and zones pertinent to this work.)

Please be advised that River Gas Corporation is transferring ownership of the attached list of wells to Phillips Petroleum Company 9780 Mt. Pyramid Court, Englewood, CO 80112.
Please direct all correspondence and reports to: Phillips Petroleum Company P.O. Box 3368, Englewood, CO 80155-3368.
Effective 1/1/01.

13.

Name & Signature: Cal Hurtt *Cal Hurtt* Title: Development Manager Date: 12/19/00

(This space for state use only)

(4/94) (See Instructions on Reverse Side)

## Drunkards Wash Total Well Count

(Through 2000 Drilling Season)

| Well # | API # | Location | Section | Tship | Range |
|---|---|---|---|---|---|
| Utah 25-09-01 | 4300730130 | 1683 FSL, 877 FEL | 25 | 14S | 09E |
| Utah 36-01-02 | 4300730178 | 600 FNL, 620 FEL | 36 | 14S | 09E |
| Utah 31-03-03 | 4300730143 | 740 FNL, 1780 FWL | 31 | 14S | 10E |
| Utah 36-03-04 | 4300730142 | 822 FNL, 2176 FWL | 36 | 14S | 09E |
| Utah 36-09-05 | 4300730144 | 2050 FSL, 700 FEL | 36 | 14S | 09E |
| Utah 25-07-06 | 4300730156 | 2599 FNL, 1902 FEL | 25 | 14S | 09E |
| Utah 25-11-07 | 4300730157 | 1718 FSL, 2210 FWL | 25 | 14S | 09E |
| Utah 26-16-08 | 4300730181 | 800 FSL, 750 FEL | 26 | 14S | 09E |
| Utah 35-01-09 | 4300730180 | 650 FNL, 850 FEL | 35 | 14S | 09E |
| Utah 31-12-10 | 4300730183 | 1995 FSL, 745 FWL | 31 | 14S | 10E |
| Utah 36-11-11 | 4300730184 | 1837 FSL, 1903 FWL | 36 | 14S | 09E |
| Utah 19-14-12 | 4300730182 | 860 FSL, 1780 FWL | 19 | 14S | 10E |
| Utah 30-05-13 | 4300730179 | 1493 FNL, 728 FWL | 30 | 14S | 10E |
| Utah 30-13-14 | 4300730185 | 612 FSL, 670 FWL | 30 | 14S | 10E |
| Utah 24-01-15 | 4300730191 | 1320 FNL, 1320 FEL | 24 | 14S | 09E |
| Utah 24-03-16 | 4300730187 | 1310 FNL, 1525 FWL | 24 | 14S | 09E |
| Utah 24-12-17 | 4300730208 | 1320 FSL, 1320 FWL | 24 | 14S | 09E |
| Utah 24-16-18 | 4300730192 | 482 FSL, 940 FEL | 24 | 14S | 09E |
| Utah 23-02-19 | 4300730207 | 963 FNL, 1470 FEL | 23 | 14S | 09E |
| Utah 23-04-20 | 4300730194 | 1291 FNL, 1257 FWL | 23 | 14S | 09E |
| Utah 23-14-21 | 4300730200 | 739 FSL, 1716 FWL | 23 | 14S | 09E |
| Utah 23-09-22 | 4300730201 | 1320 FSL, 1320 FEL | 23 | 14S | 09E |
| Utah 26-01-23 | 4300730205 | 1320 FNL, 1320 FEL | 26 | 14S | 09E |
| Utah 26-06-24 | 4300730202 | 1480 FNL, 2000 FWL | 26 | 14S | 09E |
| Utah 26-11-25 | 4300730204 | 1500 FSL, 1500 FWL | 26 | 14S | 09E |
| Utah 35-03-26 | 4300730203 | 1085 FNL, 1805 FWL | 35 | 14S | 09E |
| Utah 35-10-27 | 4300730197 | 2567 FSL, 2151 FEL | 35 | 14S | 09E |
| Utah 35-13-28 | 4300730198 | 1236 FSL, 1152 FWL | 35 | 14S | 09E |
| Utah 27-08-29 | 4300730193 | 2134 FNL, 753 FEL | 27 | 14S | 09E |
| Utah 27-09-30 | 4300730186 | 1359 FSL, 707 FEL | 27 | 14S | 09E |
| Utah 34-01-31 | 4300730196 | 464 FNL, 540 FEL | 34 | 14S | 09E |
| Utah 34-09-32 | 4300730195 | 1938 FSL, 435 FEL | 34 | 14S | 09E |
| Utah 25-04-33 | 4300730206 | 920 FNL, 780 FWL | 25 | 14S | 09E |
| Prettyman 10-15-34 | 4300730211 | 842 FSL, 1419 FEL | 10 | 14S | 09E |
| Utah 10-36 | 4300730302 | 1213 FNL, 469 FEL | 10 | 15S | 09E |
| Utah 12-15-37 | 4300730210 | 1158 FSL, 1494 FEL | 12 | 15S | 09E |
| Utah 06-38 | 4300730217 | 899 FNL, 1730 FEL | 6 | 15S | 10E |
| Utah 06-39 | 4300730218 | 934 FNL, 819 FWL | 6 | 15S | 10E |
| Utah 06-40 | 4300730219 | 2180 FSL, 1780 FEL | 6 | 15S | 10E |
| Utah 06-41 | 4300730254 | 2124 FSL, 1054 FWL | 6 | 15S | 10E |
| Utah 01-42 | 4300730220 | 860 FNL, 1780 FEL | 1 | 15S | 09E |
| Utah 01-43 | 4300730221 | 808 FNL, 1451 FWL | 1 | 15S | 09E |
| Utah 01-44 | 4300730222 | 860 FSL, 1320 FWL | 1 | 15S | 09E |
| Utah 01-45 | 4300730223 | 1219 FSL, 1318 FEL | 1 | 15S | 09E |
| Utah 02-46 | 4300730224 | 860 FNL, 860 FEL | 2 | 15S | 09E |

| | | | | | |
|---|---|---|---|---|---|
| Utah 02-47 | 4300730225 | 1318 FNL, 1791 FWL | 2 | 15S | 09E |
| Utah 02-48 | 4300730226 | 1780 FSL, 860 FEL | 2 | 15S | 09E |
| Utah 02-49 | 4300730227 | 1320 FSL, 2080 FWL | 2 | 15S | 09E |
| Utah 11-50 | 4300730228 | 860 FNL, 860 FEL | 11 | 15S | 09E |
| Utah 11-51 | 4300730229 | 1000 FNL, 1900 FWL | 11 | 15S | 09E |
| Utah 11-52 | 4300730230 | 1400 FSL, 1100 FEL | 11 | 15S | 09E |
| Utah 11-53 | 4300730231 | 1780 FSL, 1800 FWL | 11 | 15S | 09E |
| Utah 12-54 | 4300730232 | 875 FNL, 1015 FWL | 12 | 15S | 09E |
| Utah 12-55 | 4300730233 | 1500 FNL, 1320 FEL | 12 | 15S | 09E |
| Utah 12-56 | 4300730234 | 1500 FSL, 1320 FWL | 12 | 15S | 09E |
| Utah 07-57 | 4300730235 | 1421 FNL, 1003 FWL | 7 | 15S | 10E |
| Utah 07-58 | 4300730236 | 1495 FNL, 2006 FEL | 7 | 15S | 10E |
| Utah 07-59 | 4300730237 | 1400 FSL, 2100 FEL | 7 | 15S | 10E |
| Utah 07-60 | 4300730238 | 954 FSL, 1256 FWL | 7 | 15S | 10E |
| Utah 14-61 | 4300730239 | 1386 FNL, 931 FEL | 14 | 15S | 09E |
| Utah 14-62 | 4300730240 | 980 FNL, 1385 FWL | 14 | 15S | 09E |
| Utah 14-63 | 4300730241 | 1780 FSL, 1320 FEL | 14 | 15S | 09E |
| Utah 14-64 | 4300730242 | 907 FSL, 1392 FWL | 14 | 15S | 09E |
| Utah 13-65 | 4300730243 | 1320 FNL, 1200 FEL | 13 | 15S | 09E |
| Utah 13-66 | 4300730244 | 1276 FNL, 1301 FWL | 13 | 15S | 09E |
| Utah 13-67 | 4300730245 | 1800 FSL, 1500 FEL | 13 | 15S | 09E |
| Utah 13-68 | 4300730246 | 1320 FSL, 1320 FWL | 13 | 15S | 09E |
| Utah 18-69 | 4300730427 | 1320 FNL, 1320 FWL | 18 | 15S | 10E |
| Utah 18-70 | 4300730248 | 1110 FNL, 2127 FEL | 18 | 15S | 10E |
| Utah 18-71 | 4300730249 | 1764 FSL, 1767 FEL | 18 | 15S | 10E |
| Utah 18-72 | 4300730250 | 2100 FSL, 1100 FWL | 18 | 15S | 10E |
| USA 19-73 | 4300730392 | 1664 FNL, 1412 FEL | 19 | 15S | 10E |
| Utah 14-74 | 4300730529 | 1365 FSL, 1988 FEL | 14 | 14S | 09E |
| Utah 14-75 | 4300730263 | 1036 FSL, 1622 FWL | 14 | 14S | 09E |
| Utah 22-76 | 4300730251 | 1320 FNL, 660 FEL | 22 | 14S | 09E |
| Utah 19-77 | 4300730252 | 1780 FSL, 660 FWL | 19 | 14S | 10E |
| Williams 30-78 | 4300730279 | 460 FNL, 660 FEL | 30 | 14S | 10E |
| Utah 31-79 | 4300730253 | 1780 FSL, 1780 FEL | 31 | 14S | 10E |
| Utah 24-80 | 4300730255 | 590 FNL, 1612 FWL | 24 | 15S | 09E |
| Utah 24-81 | 4300730256 | 1067 FNL, 1361 FEL | 24 | 15S | 09E |
| Utah 32-82 | 4300730257 | 600 FNL, 2028 FEL | 32 | 15S | 09E |
| Utah 21-83 | 4300730259 | 1780 FNL, 460 FWL | 21 | 15S | 10E |
| H&A 07-84 | 4300730258 | 1780 FSL, 1780 FWL | 7 | 15S | 09E |
| Utah 27-85 | 4300730261 | 2173 FNL, 676 FWL | 27 | 14S | 08E |
| Utah 24-86 | 4300730267 | 1788 FSL, 1677 FEL | 24 | 15S | 09E |
| Utah 24-87 | 4300730375 | 1780 FSL, 1333 FWL | 24 | 15S | 09E |
| USA 15-88 | 4300730264 | 872 FSL, 875 FEL | 15 | 14S | 09E |
| Telonis 22-89 | 4300730266 | 836 FNL, 1766 FWL | 22 | 14S | 09E |
| Telonis 21-90 | 4300730328 | 1272 FNL, 1188 FEL | 21 | 14S | 09E |
| USA 13-91 | 4300730568 | 1443 FSL, 1017 FWL | 13 | 14S | 09E |
| Utah 13-92 | 4300730439 | 624 FSL, 899 FEL | 13 | 14S | 09E |
| Utah 18-93 | 4300730587 | 556 FSL, 673 FWL | 18 | 14S | 10E |
| Utah 05-95 | 4300730269 | 640 FNL, 580 FWL | 5 | 15S | 10E |
| Utah 05-94 | 4300730270 | 1520 FSL, 1320 FWL | 5 | 15S | 10E |

| | | | | | |
|---|---|---|---|---|---|
| Utah 05-96 | 4300730271 | 1780 FSL, 2180 FEL | 5 | 15S | 10E |
| Utah 08-97 | 4300730272 | 1495 FNL, 1273 FEL | 8 | 15S | 10E |
| Utah 08-98X | 4300730285 | 1341 FNL, 1319 FWL | 8 | 15S | 10E |
| Utah 08-99 | 4300730274 | 1500 FSL, 1120 FWL | 8 | 15S | 10E |
| Utah 08-100 | 4300730275 | 1500 FSL, 1400 FEL | 8 | 15S | 10E |
| Utah 17-101 | 4300730416 | 460 FNL, 2180 FEL | 17 | 15S | 10E |
| Utah 17-102 | 4300730277 | 810 FNL, 910 FWL | 17 | 15S | 10E |
| Utah 17-103 | 4300730278 | 1520 FSL, 1120 FWL | 17 | 15S | 10E |
| Powell 19-104 | 4300730282 | 1327 FNL, 1458 FWL | 19 | 15S | 10E |
| Powell 19-105 | 4300730283 | 1239 FSL, 1325 FWL | 19 | 15S | 10E |
| Utah 23-106 | 4300730280 | 150 FNL, 1400 FEL | 23 | 15S | 09E |
| Utah 23-107 | 4300730281 | 1252 FNL, 1255 FWL | 23 | 15S | 09E |
| Birkinshaw 19-108 | 4300730284 | 1305 FNL, 1192 FEL | 19 | 15S | 09E |
| Utah 36-109 | 4300730268 | 1800 FNL, 1800 FWL | 36 | 15S | 09E |
| Utah 16-110 | 4301530250 | 860 FSL, 2000 FWL | 16 | 16S | 09E |
| Fausett 09-111 | 4300730428 | 2215 FSL, 354 FEL | 9 | 14S | 09E |
| Fausett 10-112 | 4300730415 | 1590 FSL, 1342 FWL | 10 | 14S | 09E |
| Giacoletto 11-113 | 4300730335 | 500 FSL, 2070 FWL | 11 | 14S | 09E |
| Prettyman 11-114 | 4300730340 | 471 FSL, 1828 FEL | 11 | 14S | 09E |
| Giacoletto 13-120 | 4300730407 | 1200 FNL, 1219 FWL | 13 | 14S | 09E |
| Giacoletto 14-121 | 4300730345 | 1200 FNL, 1060 FEL | 14 | 14S | 09E |
| USA 14-122 | 4300730404 | 1500 FNL, 1039 FWL | 14 | 14S | 09E |
| Utah 30-125 | 4300730262 | 630 FSL, 1627 FEL | 30 | 14S | 10E |
| Utah 31-126 | 4300730305 | 1954 FNL, 1291 FEL | 31 | 14S | 10E |
| Robertson 32-127 | 4300730374 | 646 FNL, 349 FWL | 32 | 14S | 10E |
| Utah 04-129 | 4300730309 | 700 FWL, 1850 FSL | 4 | 15S | 10E |
| Utah 04-130 | 4300730519 | 860 FSL, 2150 FEL | 4 | 15S | 10E |
| Sampinos 16-131 | 4300730610 | 1201 FNL, 1016 FWL | 16 | 15S | 10E |
| Jensen 16-132 | 4300730588 | 1206 FSL, 1240 FWL | 16 | 15S | 10E |
| LDS 17-133 | 4300730296 | 1500 FSL, 1700 FEL | 17 | 15S | 10E |
| Utah 25-134 | 4300730399 | 745 FNL, 1482 FWL | 25 | 15S | 09E |
| Utah 36-135 | 4300730341 | 850 FNL, 850 FEL | 36 | 15S | 09E |
| Utah 36-136 | 4300730343 | 465 FSL, 660 FWL | 36 | 15S | 09E |
| Utah 36-137 | 4300730342 | 2180 FSL, 1800 FEL | 36 | 15S | 09E |
| Utah 02-138 | 4301530288 | 638 FNL, 1865 FEL | 2 | 16S | 09E |
| Utah 02-139 | 4301530289 | 1890 FNL, 850 FWL | 2 | 16S | 09E |
| Utah 02-140 | 4301530290 | 850 FSL, 1800 FWL | 2 | 16S | 09E |
| Utah 02-141 | 4301530291 | 1800 FSL, 1950 FEL | 2 | 16S | 09E |
| Telonis 15-142 | 4300730319 | 1320 FSL, 860 FWL | 15 | 14S | 09E |
| Fausett 16-143 | 4300730320 | 1320 FNL, 1320 FEL | 16 | 14S | 09E |
| Fausett 16-144 | 4300730321 | 1800 FNL, 860 FWL | 16 | 14S | 09E |
| Telonis 16-145 | 4300730322 | 1320 FSL, 1320 FWL | 16 | 14S | 09E |
| Paar 16-146 | 4300730323 | 843 FSL, 2157 FEL | 16 | 14S | 09E |
| Christiansen 17-147 | 4300730324 | 860 FSL, 1800 FWL | 17 | 14S | 09E |
| Christiansen 17-148 | 4300730325 | 1250 FSL, 1100 FEL | 17 | 14S | 09E |
| Birkinshaw 18-149 | 4300730326 | 500 FSL, 500 FEL | 18 | 14S | 09E |
| Telonis 19-150 | 4300730300 | 751 FNL, 1840 FWL | 19 | 14S | 09E |
| Telonis 19-151 | 4300730299 | 860 FSL, 2000 FWL | 19 | 14S | 09E |
| Telonis 20-152 | 4300730327 | 1320 FNL, 1900 FEL | 20 | 14S | 09E |

| | | | | | |
|---|---|---|---|---|---|
| Telonis 21-153 | 4300730329 | 860 FNL, 1800 FWL | 21 | 14S | 09E |
| Telonis 29-154 | 4300730330 | 800 FNL, 1500 FWL | 29 | 14S | 09E |
| Telonis 29-155 | 4300730331 | 1800 FSL, 1250 FWL | 29 | 14S | 09E |
| Telonis 30-156 | 4300730301 | 910 FNL, 868 FEL | 30 | 14S | 09E |
| Telonis 30-157 | 4300730332 | 1800 FSL, 580 FEL | 30 | 14S | 09E |
| Utah 32-158 | 4300730333 | 1038 FNL, 1768 FEL | 32 | 14S | 09E |
| Utah 32-159 | 4300730334 | 2011 FNL, 1426 FWL | 32 | 14S | 09E |
| Utah 32-160 | 4300730398 | 1500 FSL, 1780 FWL | 32 | 14S | 09E |
| Utah 32-161 | 4300730336 | 415 FSL, 1408 FEL | 32 | 14S | 09E |
| Utah 36-162 | 4300730315 | 2053 FNL, 685 FEL | 36 | 14S | 08E |
| Utah 36-163 | 4300730316 | 860 FNL, 2100 FWL | 36 | 14S | 08E |
| Utah 36-164 | 4300730317 | 1070 FSL, 2000 FWL | 36 | 14S | 08E |
| Utah 36-165 | 4300730318 | 1100 FSL, 1500 FEL | 36 | 14S | 08E |
| Utah 02-166 | 4300730337 | 1219 FNL, 1738 FEL | 2 | 15S | 08E |
| Utah 02-167 | 4300730338 | 660 FNL, 2075 FWL | 2 | 15S | 08E |
| Utah 02-168 | 4300730339 | 1800 FSL, 2100 FWL | 2 | 15S | 08E |
| Utah 02-169 | 4300730308 | 754 FSL, 1000 FEL | 2 | 15S | 08E |
| Seamons 32-170 | 4300730291 | 700 FNL, 500 FWL | 32 | 13S | 09E |
| Pinnacle Peak 19-171 | 4300730117 | 1320 FSL, 1320 FEL | 19 | 14S | 09E |
| Telonis 20-172 | 4300730107 | 1980 FSL, 660 FEL | 20 | 14S | 09E |
| Powell 30-173 | 4300730346 | 1200 FNL, 1200 FWL | 30 | 15S | 10E |
| Stella-Hamaker 10-174 | 4300730116 | 852 FNL, 1971 FWL | 10 | 15S | 08E |
| Utah 31-175 | 4301530317 | 897 FNL, 1731 FWL | 31 | 16S | 09E |
| USA 15-176 | 4300730450 | 2588 FNL, 1155 FEL | 15 | 14S | 09E |
| USA 09-178 | 4300730419 | 428 FSL, 2527 FWL | 9 | 14S | 09E |
| USA 17-180A | 4300730622 | 2563 FNL, 1383 FWL | 17 | 14S | 09E |
| USA 18-182 | 4300730417 | 1068 FSL, 1972 FWL | 18 | 14S | 09E |
| USA 24-183 | 4300730469 | 828 FNL, 624 FEL | 24 | 14S | 08E |
| Utah 27-187 | 4300730395 | 1400 FNL, 1400 FWL | 27 | 14S | 09E |
| Utah 27-188 | 4300730292 | 477 FSL, 518 FWL | 27 | 14S | 09E |
| Utah 28-189 | 4300730396 | 1707 FNL, 868 FEL | 28 | 14S | 09E |
| Utah 28-190 | 4300730397 | 1969 FNL, 1324 FWL | 28 | 14S | 09E |
| Utah 28-191 | 4300730293 | 693 FSL, 1623 FWL | 28 | 14S | 09E |
| Utah 28-192 | 4300730294 | 1407 FNL, 1940 FWL | 28 | 14S | 09E |
| Utah 29-193 | 4300730405 | 693 FNL, 1029 FEL | 29 | 14S | 09E |
| Utah 29-194 | 4300730427 | 951 FSL, 370 FEL | 29 | 14S | 09E |
| Utah 30-195 | 4300730265 | 1407 FNL, 1940 FWL | 30 | 14S | 09E |
| Utah 30-196 | 4300730344 | 1056 FSL, 1984 FWL | 30 | 14S | 09E |
| Kakatsidas 31-197 | 4300730420 | 619 FNL, 1361 FEL | 31 | 14S | 09E |
| Utah 31-198 | 4300730406 | 1403 FNL, 1540 FWL | 31 | 14S | 09E |
| Utah 31-199 | 4300730480 | 1125 FSL, 928 FWL | 31 | 14S | 09E |
| Utah 31-200 | 4300730385 | 2118 FSL, 549 FEL | 31 | 14S | 09E |
| Utah 33-201 | 4300730386 | 317 FNL, 1815 FEL | 33 | 14S | 09E |
| Utah 33-202 | 4300730387 | 1939 FNL, 1593 FWL | 33 | 14S | 09E |
| Utah 33-203 | 4300730388 | 1373 FSL, 1140 FWL | 33 | 14S | 09E |
| Utah 33-204 | 4300730389 | 2024 FSL, 1525 FEL | 33 | 14S | 09E |
| Utah 05-205 | 4300730384 | 1485 FNL, 760 FEL | 5 | 15S | 09E |
| Utah 05-206 | 4300730390 | 1300 FNL, 1352 FWL | 5 | 15S | 09E |
| Utah 06-207 | 4300730391 | 825 FNL, 928 FEL | 6 | 15S | 08E |

| | | | | | |
|---|---|---|---|---|---|
| Utah 01-208 | 4300730464 | 1246 FNL, 1831 FEL | 1 | 15S | 09E |
| Utah 01-209 | 4300730467 | 2271 FSL, 1251 FEL | 1 | 15S | 09E |
| Utah 34-211 | 4300730114 | 1181 FSL, 1005 FWL | 34 | 14S | 09E |
| Utah 03-212 | 4300730468 | 1187 FNL, 1761 FEL | 3 | 15S | 09E |
| Utah 03-213 | 4300730381 | 1466 FNL, 2041 FWL | 3 | 15S | 09E |
| Utah 03-214 | 4300730295 | 813 FSL, 966 FWL | 3 | 15S | 09E |
| Utah 03-215 | 4300730297 | 988 FSL, 604 FEL | 3 | 15S | 09E |
| Utah 04-216 | 4300730382 | 1610 FNL, 810 FEL | 4 | 15S | 09E |
| Utah 04-217 | 4300730383 | 1343 FNL, 1119 FWL | 4 | 15S | 09E |
| Utah 04-218 | 4300730418 | 1084 FSL, 509 FEL | 4 | 15S | 09E |
| Utah 10-219 | 4300730298 | 805 FNL, 756 FWL | 10 | 15S | 09E |
| Utah 10-220 | 4300730432 | 474 FSL, 372 FWL | 10 | 15S | 09E |
| Utah 10-221 | 4300730303 | 1602 FSL, 2032 FEL | 10 | 15S | 09E |
| USA 19-222 | 4300730393 | 1574 FSL, 1647 FEL | 19 | 15S | 10E |
| Utah 06-223 | 4300730430 | 1636 FSL, 1085 FEL | 6 | 15S | 09E |
| Utah 05-225 | 4300730440 | 421 FSL, 498 FEL | 5 | 15S | 09E |
| Utah 04-226 | 4300730408 | 571 FSL, 2331 FWL | 4 | 15S | 09E |
| Utah 09-227 | 4300730449 | 652 FNL, 1331 FEL | 9 | 15S | 09E |
| Utah 09-228 | 4300730413 | 1444 FNL, 1520 FWL | 9 | 15S | 09E |
| Utah 09-229 | 4300730414 | 1595 FSL, 2051 FWL | 9 | 15S | 09E |
| Utah 08-230 | 4300730410 | 2003 FNL, 960 FEL | 8 | 15S | 09E |
| Utah 08-231 | 4300730411 | 1321 FNL, 1738 FWL | 8 | 15S | 09E |
| H&A 08-232 | 4300730412 | 1135 FSL, 1497 FWL | 8 | 15S | 09E |
| Utah 08-233 | 4300730488 | 468 FSL, 2030 FEL | 8 | 15S | 09E |
| Utah 07-234 | 4300730409 | 1876 FNL, 875 FEL | 7 | 15S | 09E |
| Utah 07-235 | 4300730421 | 2098 FSL, 510 FEL | 7 | 15S | 09E |
| H&A 18-236 | 4300730459 | 896 FNL, 1511 FEL | 18 | 15S | 09E |
| Utah 18-237 | 4300730485 | 1867 FSL, 1920 FEL | 18 | 15S | 09E |
| Utah 17-238 | 4300730510 | 677 FNL, 1321 FEL | 17 | 15S | 09E |
| Utah 17-239 | 4300730511 | 1383 FNL, 1576 FWL | 17 | 15S | 09E |
| Utah 17-240 | 4300730512 | 1977 FSL, 1394 FWL | 17 | 15S | 09E |
| Utah 17-241 | 4300730513 | 1668 FSL, 2222 FEL | 17 | 15S | 08E |
| USA 12-242 | 4300730482 | 1738 FNL, 1505 FEL | 12 | 15S | 08E |
| USA 12-243 | 4300730486 | 950 FNL, 232 FWL | 12 | 15S | 08E |
| USA 11-244 | 4300730463 | 1151 FNL, 1690 FEL | 11 | 15S | 08E |
| USA 11-245 | 4300730462 | 1234 FNL, 1743 FWL | 11 | 15S | 08E |
| Utah 01-246 | 4300730566 | 1619 FNL, 170 FWL | 1 | 15S | 09E |
| Utah 01-247 | 4300730465 | 594 FSL, 266 FWL | 1 | 15S | 08E |
| USA 35-248 | 4300730582 | 828 FSL, 1245 FEL | 35 | 15S | 09E |
| USA 30-251 | 4300730403 | 1169 FSL, 913 FWL | 30 | 15S | 10E |
| Utah 25-252 | 4300730400 | 1937 FNL, 1416 FEL | 25 | 15S | 09E |
| Utah 25-253 | 4300730401 | 809 FSL, 899 FWL | 25 | 15S | 09E |
| Utah 25-254 | 4300730402 | 1787 FSL, 1954 FEL | 25 | 15S | 09E |
| Utah 26-255 | 4300730446 | 1209 FNL, 755 FEL | 26 | 15S | 09E |
| Utah 26-256 | 4300730445 | 1274 FSL, 1351 FWL | 26 | 15S | 09E |
| Utah 26-257 | 4300730444 | 1263 FSL, 1368 FEL | 26 | 15S | 09E |
| Utah 34-258 | 4300730552 | 1198 FNL, 1880 FEL | 34 | 15S | 09E |
| Utah 34-259 | 4300730456 | 1662 FSL, 2046 FEL | 34 | 15S | 09E |
| Utah 35-260 | 4300730447 | 814 FNL, 1900 FEL | 35 | 15S | 09E |

| | | | | | |
|---|---|---|---|---|---|
| Utah 35-261 | 4300730442 | 615 FNL, 818 FWL | 35 | 15S | 09E |
| Utah 35-262 | 4300730443 | 1657 FSL, 1850 FWL | 35 | 15S | 09E |
| Utah 35-263 | 4300730441 | 1785 FSL, 946 FEL | 35 | 15S | 09E |
| USA 01-264 | 4301530336 | 1055 FNL, 441 FWL | 1 | 16S | 09E |
| USA 01-265 | 4301530337 | 1739 FSL, 636 FWL | 1 | 16S | 09E |
| Woolstenhulme 05-266 | 4300730481 | 1389 FNL, 2179 FEL | 5 | 15S | 10E |
| Utah 26-267 | 4300730514 | 1836 FNL, 2130 FWL | 26 | 15S | 09E |
| Utah 27-268 | 4300730457 | 1125 FSL, 1682 FWL | 26 | 15S | 09E |
| Utah 27-269 | 4300730458 | 1661 FSL, 795 FEL | 27 | 15S | 09E |
| Utah 34-270 | 4300730347 | 774 FNL, 756 FWL | 34 | 15S | 09E |
| Utah 34-271 | 4300730496 | 1693 FSL, 965 FWL | 34 | 15S | 09E |
| Utah 33-272 | 4300730502 | 694 FNL, 2034 FEL | 33 | 15S | 09E |
| Utah 33-273 | 4300730493 | 1922 FNL, 328 FWL | 33 | 15S | 09E |
| Utah 33-274 | 4300730494 | 1098 FSL, 1673 FWL | 33 | 15S | 09E |
| Utah 33-275 | 4300730495 | 1401 FSL, 1029 FEL | 33 | 15S | 09E |
| Utah 32-276 | 4300730483 | 738 FL, 1318 FWL | 32 | 15S | 09E |
| Utah 32-277 | 4300730484 | 1613 FSL, 1931 FEL | 32 | 15S | 09E |
| Utah 05-278 | 4301530278 | 1665 FNL, 1923 FEL | 5 | 15S | 09E |
| Utah 04-279 | 4301530340 | 1020 FNL, 1757 FEL | 4 | 16S | 09E |
| Utah 04-280 | 4301530341 | 2087 FNL, 1627 FWL | 4 | 16S | 09E |
| Utah 04-281 | 4301530399 | 999 FSL, 896 FWL | 4 | 16S | 09E |
| Utah 04-282 | 4301530342 | 2188 FSL, 911 FEL | 4 | 16S | 09E |
| Utah 03-283 | 4301530349 | 461 FNL, 1772 FEL | 3 | 16S | 09E |
| Utah 03-284 | 4301530346 | 1218 FNL, 753 FWL | 3 | 16S | 09E |
| Utah 03-285 | 4301530345 | 1917 FSL, 546 FWL | 3 | 16S | 09E |
| Utah 03-286 | 4301530344 | 1690 FSL, 1958 FEL | 3 | 16S | 09E |
| USA 20-287 | 4300730448 | 1395 FNL, 979 FWL | 20 | 15S | 10E |
| USA 20-288 | 4300730451 | 1566 FSL, 1125 FWL | 20 | 15S | 10E |
| USA 30-289 | 4300730452 | 1184 FNL, 1353 FEL | 30 | 15S | 10E |
| USA 30-290 | 4300730453 | 1080 FSL, 1508 FEL | 30 | 14S | 10E |
| USA 11-291 | 4300730501 | 2609 FNL, 1994 FEL | 11 | 14S | 09E |
| USA 11-292 | 4300730500 | 2483 FNL, 664 FWL | 11 | 14S | 09E |
| USA 10-293 | 4300730498 | 2011 FNL, 847 FEL | 10 | 14S | 09E |
| USA 10-294 | 4300730497 | 1750 FNL, 769 FWL | 10 | 14S | 09E |
| USA 09-295 | 4300730499 | 696 FNL, 1198 FEL | 9 | 14S | 09E |
| Fausett 09-296 | 4300730455 | 2072 FNL, 798 FWL | 9 | 14S | 09E |
| USA 08-297 | 4300730491 | 789 FNL, 958 FEL | 8 | 14S | 09E |
| Ritzakis 08-298 | 4300730475 | 798 FNL, 2018 FWL | 8 | 14S | 09E |
| Ritzakis 08-299 | 4300730479 | 2187 FSL, 1885 FWL | 8 | 14S | 09E |
| Ritzakis 08-300 | 4300730476 | 2485 FSL, 1522 FEL | 8 | 14S | 09E |
| USA 04-302 | 4300730489 | 1076 FSL, 1860 FWL | 4 | 14S | 09E |
| USA 04-303 | 4300730490 | 597 FSL, 984 FEL | 4 | 14S | 09E |
| Ritzakis 05-304 | 4300730473 | 688 FSL, 1888 FWL | 5 | 14S | 09E |
| Ritzakis 05-305 | 4300730474 | 1104 FSL, 1196 FEL | 5 | 14S | 09E |
| USA 06-306 | 4300730492 | 399 FSL, 306 FEL | 6 | 14S | 09E |
| Helper 07-307 | 4300730487 | 672 FNL, 962 FWL | 7 | 15S | 09E |
| USA 31-310 | 4300730516 | 624 FNL, 1238 FWL | 31 | 15S | 10E |
| USA 31-311 | 4300730517 | 1934 FSL, 973 FWL | 31 | 15S | 10E |
| USA 01-312 | 4301530350 | 1453 FNL, 1881 FEL | 1 | 16S | 09E |

| | | | | | |
|---|---|---|---|---|---|
| USA 11-314 | 4301530353 | 1262 FNL, 1136 FWL | 11 | 16S | 09E |
| USA 10-317 | 4301530352 | 1221 FNL, 1104 FEL | 10 | 16S | 09E |
| USA 12-322 | 4300730576 | 492 FSL, 495 FWL | 10 | 15S | 08E |
| USA 12-323 | 4300730577 | 540 FSL, 784 FEL | 12 | 15S | 08E |
| USA 11-324 | 4300730575 | 732 FSL, 1763 FEL | 11 | 15S | 08E |
| USA 14-325 | 4300730579 | 890 FNL, 1469 FEL | 14 | 15S | 08E |
| USA 13-326 | 4300730581 | 1065 FNL, 1563 FEL | 13 | 15S | 08E |
| USA 13-327 | 4300730578 | 1092 FNL, 941 FWL | 13 | 15S | 08E |
| USA 35-328 | 4300730583 | 964 FSL, 1999 FWL | 35 | 14S | 08E |
| Utah 09-329 | 4300730561 | 884 FSL, 1324 FEL | 9 | 15S | 09E |
| Utah 06-330 | 4300730562 | 938 FNL, 1564 FWL | 6 | 15S | 09E |
| Utah 20-333 | 4300730669 | 1069 FNL, 1460 FEL | 20 | 15S | 09E |
| Utah 20-334 | 4300730625 | 932 FNL, 1655 FWL | 20 | 15S | 09E |
| Utah 20-335 | 4300730626 | 2152 FSL, 1716 FWL | 20 | 15S | 09E |
| Utah 19-337 | 4300730623 | 926 FNL, 768 FEL | 19 | 15S | 09E |
| Utah 19-338 | 4300730624 | 1789 FSL, 1426 FEL | 19 | 15S | 09E |
| Utah 05-343 | 4301530400 | 1795 FNL, 1431 FWL | 5 | 16S | 09E |
| Utah 05-344 | 4301530401 | 1316 FSL, 1343 FWL | 5 | 16S | 09E |
| Utah 05-345 | 4301530402 | 908 FSL, 1449 FEL | 5 | 16S | 09E |
| Utah 08-354 | 4301530395 | 1073 FNL, 1914 FEL | 8 | 16S | 09E |
| Utah 08-355 | 4301530378 | 1673 FNL, 850 FWL | 8 | 16S | 09E |
| Utah 08-356 | 4301530379 | 1701 FSL, 799 FWL | 8 | 16S | 09E |
| Utah 08-357 | 4301530380 | 1722 FSL, 1599 FEL | 8 | 16S | 09E |
| Utah 09-358 | 4301530300 | 2097 FNL, 1634 FEL | 9 | 16S | 09E |
| Utah 09-359 | 4301530407 | 1787 FNL, 871 FWL | 9 | 16S | 09E |
| Utah 09-360 | 4301530397 | 1323 FSL, 881 FWL | 9 | 16S | 09E |
| Utah 09-361 | 4301530408 | 1564 FSL, 1998 FEL | 9 | 16S | 09E |
| USA 10-362 | 4301530424 | 2225 FNL, 494 FWL | 10 | 16S | 09E |
| USA 14-386 | 4300730634 | 592 FNL, 2236 FWL | 14 | 15S | 08E |
| USA 24-387 | 4300730612 | 1243 FSL, 2306 FWL | 10 | 14S | 08E |
| USA 24-388 | 4300730613 | 1177 FSL, 612 FEL | 24 | 14S | 08E |
| Utah 25-389 | 4300730600 | 737 FNL, 1976 FEL | 25 | 14S | 08E |
| Utah 25-390 | 4300730599 | 1540 FNL, 1354 FWL | 25 | 14S | 08E |
| Utah 25-391A | 4300730658 | 1264 FSL, 1573 FWL | 25 | 14S | 08E |
| Utah 25-392 | 4300730602 | 2045 FSL, 1718 FEL | 25 | 14S | 09E |
| USA 26-393 | 4300730614 | 1666 FNL, 874 FEL | 26 | 14S | 08E |
| USA 26-394 | 4300730615 | 856 FSL, 2377 FWL | 26 | 14S | 08E |
| USA 26-395 | 4300730616 | 1927 FSL, 830 FEL | 26 | 14S | 08E |
| USA 35-396 | 4300730584 | 616 FNL, 1896 FEL | 35 | 14S | 08E |
| USA 35-397 | 4300730585 | 949 FNL, 1264 FWL | 35 | 14S | 08E |
| USA 20-398 | 4300730590 | 1374 FNL, 1387 FEL | 20 | 15S | 10E |
| USA 20-399 | 4300730591 | 1445 FSL, 1128 FEL | 20 | 15S | 10E |
| Utah 09-412 | 4300730580 | 1102 FSL, 1018 FWL | 9 | 15S | 10E |
| Utah 09-413 | 4300730605 | 1007 FNL, 1197 FWL | 9 | 15S | 10E |
| Utah 10-415 | 4301530391 | 1090 FNL, 557 FEL | 10 | 16S | 08E |
| USA 14-416 | 4300730646 | 892 FSL, 1311 FWL | 14 | 15S | 08E |
| USA 14-417 | 4300730647 | 1741 FSL, 1054 FEL | 14 | 15S | 09E |
| USA 13-418 | 4300730645 | 737 FSL, 793 FEL | 13 | 15S | 08E |
| USA 13-419 | 4300730631 | 2617 FSL, 1958 FEL | 13 | 15S | 08E |

| | | | | | |
|---|---|---|---|---|---|
| USA 23-423 | 4300730611 | 408 FSL, 924 FEL | 23 | 14S | 08E |
| USA 34-434 | 4300730621 | 1342 FSL, 922 FEL | 34 | 14S | 08E |
| USA 18-435 | 4300730619 | 1868 FNL, 793 FWL | 18 | 14S | 09E |
| USA 07-436 | 4300730630 | 3121 FNL, 871 FEL | 7 | 14S | 09E |
| USA 03-442 | 4300730710 | 899 FNL, 553 FEL | 3 | 15S | 08E |
| USA 24-443 | 4300730651 | 1780 FNL, 2247 FEL | 24 | 15S | 08E |
| USA 24-444 | 4300730648 | 1338 FNL, 1153 FWL | 24 | 15S | 08E |
| USA 24-446 | 4300730708 | 1377 FNL, 2340 FWL | 24 | 14S | 08E |
| USA 13-447 | 4300730707 | 2044 FSL, 741 FEL | 13 | 14S | 08E |
| USA 24-448 | 4300730652 | 2146 FSL, 2021 FEL | 24 | 15S | 08E |
| Utah 34-456 | 4300730713 | 755 FNL, 1377 FEL | 34 | 14S | 08E |
| USA 13-470 | 4300730706 | 1741 FNL, 554 FEL | 13 | 14S | 08E |
| Utah 06-483 | 4300730716 | 2456 FSL, 988 FWL | 6 | 15S | 09E |
| American Quasar D1 | 4300730040 | 999 FSL, 1552 FWL | 31 | 14S | 10E |
| Arcadia-Telonis D2 | 4300730093 | 465 FSL, 560 FEL | 19 | 14S | 09E |
| Utah D3 | 4300730290 | 1600 FSL, 1530 FEL | 18 | 15S | 10E |
| Utah D4 | 4300730314 | 600 FNL, 500 FWL | 24 | 14S | 09E |
| Fausett D5 | 4300730351 | 467 FNL, 1461 FWL | 16 | 14S | 09E |
| Drew D6 | 4300730100 | 1300 FSL, 830 FWL | 34 | 14S | 09E |
| Utah D7 | 4301530338 | 1371 FSL, 1530 FEL | 2 | 14S | 09E |
| Utah D8 | 4300730431 | 1342 FNL, 350 FWL | 12 | 15S | 09E |
| Utah D9 | 4300730438 | 1960 FNL, 1487 FWL | 32 | 14S | 09E |
| RGC D10 | 4300730520 | 162 FNL, 1557 FEL | 28 | 15S | 09E |
| USA D11 | 4301530356 | 1513 FNL, 2437 FEL | 13 | 16S | 09E |
| Sampinos D14 | 4300730567 | 1695 FSL, 2133 FEL | 16 | 15S | 10E |

LAW OFFICES
PRUITT, GUSHEE & BACHTELL
SUITE 1850 BENEFICIAL LIFE TOWER
SALT LAKE CITY, UTAH 84111-1495
(801) 531-8446
TELECOPIER (801) 531-8468
E-MAIL: mail@pgblaw.com

THOMAS W. BACHTELL
A. JOHN DAVIS, III
JOHN W. ANDERSON
FREDERICK M. MACDONALD
GEORGE S. YOUNG
ANGELA L. FRANKLIN
JOHN S. FLITTON
MICHAEL S. JOHNSON
WILLIAM E. WARD

SENIOR COUNSEL:
ROBERT G. PRUITT, JR.
OLIVER W. GUSHEE, JR.

OF COUNSEL:
ROBERT G. PRUITT, III
BRENT A. BOHMAN

January 29, 2001

**HAND DELIVERED**

Mr. Jim Thompson
Utah Division of Oil, Gas & Mining
1594 W. North Temple
Salt Lake City, UT 84116

*Re: River Gas/Phillips Merger*

Dear Mr. Thompson:

As you may know, River Gas Corporation ("RGC") merged into Phillips Petroleum Company ("Phillips") effective December 31, 2000 at 11:59 p.m. I have enclosed a Certificate of Articles of Merger issued by the Utah Department of Commerce and, although duplicative, a sundry notice formally evidencing the merger for your records, and a list of all wells, including injection wells, formerly operated by RGC.

Please change the Division's records to reflect the change in operator of these wells from RGC to Phillips. All operational questions should be directed to Phillips at the following address:

Phillips Petroleum Company
Attn: Billy Stacy, Operations Manager
P.O. Box 3368
Englewood, CO 80155-3368
Telephone No.: (720) 344-4984

Phillips currently has a bond on file with the Division (a copy of which is enclosed for your reference), but I understand an $80,000 Letter of Credit is in the process of being substituted.

On behalf of Phillips, I thank you for your cooperation. Should you have any further questions or concerns, please do not hesitate to contact me.

Yours very truly,

Frederick M. MacDonald

FMM:cs
2078.16
Enclosures
cc: W. H. Rainbolt
Billy Stacy

**Utah Department of Commerce**
**Division of Corporations & Commercial Code**
**160 East 300 South, 2nd Floor, Box 146705**
**Salt Lake City, UT 84114-6705**
**Phone: (801) 530-4849**
**Toll Free: (877) 526-3994 Utah Residents**
**Fax: (801) 530-6438**
**Web site: http://www.commerce.state.ut.us**

Registration Number: 562960-0143 01/12/01
Business Name: PHILLIPS PETROLEUM COMPANY
Registered Date: JUNE 14, 1946

# CERTIFICATE OF ARTICLES OF MERGER

THE UTAH DIVISION OF CORPORATIONS AND COMMERCIAL CODE ("DIVISION") HEREBY CERTIFIES THAT

ARTICLES OF MERGER WERE FILED WITH THIS OFFICE ON DECEMBER 12, 2000 MERGING RIVER GAS CORPORATION, A CORPORATION OF THE STATE OF ALABAMA, INTO PHILLIPS PETROLEUM COMPANY, THE SURVIVING CORPORATION WHICH IS OF THE STATE OF DELAWARE, AS APPEARS OF RECORD IN THE OFFICE OF THE DIVISION.

Ric Campbell
Acting Division Director of
Corporations and Commercial Code

00171151

*State of Delaware*



# *Office of the Secretary of State*

Date: 12/13/2000
Receipt Number: 188532
Amount Paid: $145.00

I, EDWARD J. FREEL, SECRETARY OF STATE OF THE STATE OF DELAWARE, DO HEREBY CERTIFY THE ATTACHED IS A TRUE AND CORRECT COPY OF THE CERTIFICATE OF OWNERSHIP, WHICH MERGES:

"RIVER GAS CORPORATION", A ALABAMA CORPORATION,

WITH AND INTO "PHILLIPS PETROLEUM COMPANY" UNDER THE NAME OF "PHILLIPS PETROLEUM COMPANY", A CORPORATION ORGANIZED AND EXISTING UNDER THE LAWS OF THE STATE OF DELAWARE, AS RECEIVED AND FILED IN THIS OFFICE THE SIXTH DAY OF DECEMBER, A.D. 2000, AT 10 O'CLOCK A.M.

AND I DO HEREBY FURTHER CERTIFY THAT THE EFFECTIVE DATE OF THE AFORESAID CERTIFICATE OF OWNERSHIP IS THE THIRTY-FIRST DAY OF DECEMBER, A.D. 2000, AT 11:59 O'CLOCK A.M.

A FILED COPY OF THIS CERTIFICATE HAS BEEN FORWARDED TO THE NEW CASTLE COUNTY RECORDER OF DEEDS.

12-12-00P04:02 RCVD

State of Utah
Department of Commerce
Division of Corporations and Commercial Code
I Hereby certify that the foregoing has been filed and approved on this 12 day of Dec 20 00 in the office of this Division and hereby issue this Certificate thereof.

Examiner _____ Date 12/28/00

RIC CAMPBELL
ACTING DIRECTOR

TAB

FILED

DEC 12 2000

Utah Div. Of Corp. & Comm. Code

*Edward J. Freel, Secretary of State*

0064324 8100M

AUTHENTICATION: 0837738

001609453

DATE: 12-07-00

STATE OF DELAWARE
SECRETARY OF STATE
DIVISION OF CORPORATIONS
FILED 10:00 AM 12/06/2000
001609453 - 0064324

# CERTIFICATE OF OWNERSHIP AND MERGER

OF

RIVER GAS CORPORATION

(an Alabama corporation)

into

Phillips Petroleum Company

(a Delaware corporation)

It is hereby certified that:

1. Phillips Petroleum Company [hereinafter sometimes referred to as the "Corporation"] is a business corporation of the State of Delaware.

2. The Corporation is the owner of all of the outstanding shares of each class of stock of River Gas Corporation, which is a business corporation of the State of Alabama.

3. The laws of the jurisdiction of organization of River Gas Corporation permit the merger of a business corporation of that jurisdiction with a business corporation of another jurisdiction.

4. The Corporation hereby merges River Gas Corporation into the Corporation.

5. The following is a copy of the resolutions adopted on November 21, 2000 by the Board of Directors of the Corporation to merge the said River Gas Corporation into the Corporation:

> "1. Phillips Petroleum Company, which is a business corporation of the State of Delaware and is the owner of all of the outstanding shares of River Gas Corporation, which is a business corporation of the State of Alabama, hereby merges River Gas Corporation into Phillips Petroleum Company pursuant to the provisions of the Alabama Business Corporation Act and pursuant to the

12-12-00P04:02 RCVD

provisions of Section 253 of the General Corporation Law of Delaware.

"2. The separate existence of River Gas Corporation shall cease at the effective time and date of the merger pursuant to the provisions of the Alabama Business Corporation Act; and Phillips Petroleum Company shall continue its existence as the surviving corporation pursuant to the provisions of Section 253 of the General Corporation Law of Delaware.

"3. The Articles of Incorporation of Phillips Petroleum Company are not amended in any respect by this Plan of Merger.

"4. The issued shares of River Gas Corporation shall not be converted or exchanged in any manner, but each said share which is issued immediately prior to the effective time and date of the merger shall be surrendered and extinguished.

"5. Each share of Phillips Petroleum Company outstanding immediately prior to the effective time and date of the merger is to be an identical outstanding share of Phillips Petroleum Company at the effective time and date of the merger.

"6. No shares of Phillips Petroleum Company and no shares, securities, or obligations convertible into such shares are to be issued or delivered under this Plan of Merger.

"7. The Board of Directors and the proper officers of Phillips Petroleum Company are hereby authorized, empowered, and directed to do any and all acts and things, and to make, execute, deliver, file, and/or record any and all instruments, papers, and documents which shall be or become necessary, proper, or convenient to carry out or put into effect any of the provisions of this Plan of Merger or of the merger herein provided for. "

" This Company approves that the effective time and date of the merger herein provided for in the State of Alabama shall be 11:59 p.m. on December 31, 2000."

"Any Vice President, the Treasurer, any Assistant Treasurer, the Secretary, any Assistant Secretary, and each of them severally, be and hereby is authorized to make, execute,

deliver, file, and/or record any and all instruments, papers, and documents which shall be or become necessary, proper, or convenient to carry out or put into effect any of the provisions of these resolutions and to do or cause to be done all such acts as are necessary to give effect to the purpose and intent of the approval herein set forth."

6. This Certificate of Ownership and Merger shall be effective at 11:59 p.m. on December 31, 2000.

Executed on November 27, 2000

Phillips Petroleum Company

N. A. Loftis

N. A. Loftis, Assistant Secretary

# United States Department of the Interior

BUREAU OF LAND MANAGEMENT
Utah State Office
P.O. Box 45155
Salt Lake City, UT 84145-0155

In Reply Refer To:
3106
UTU-47157 et al
(UT-932)

JAN 30 2001

NOTICE

| | | |
|---|---|---|
| Phillips Petroleum Company<br>Attn: W. H. Rainbolt, Rocky Mtn. Region-Land<br>Box 1967<br>Houston, TX 77251-1967 | : | Oil and Gas |

Merger Recognized

Acceptable evidence has been filed in this office concerning the merger of River Gas Corporation into Phillips Petroleum Company with Phillips Petroleum Company being the surviving entity.

The oil and gas lease files and rights-of-way files identified on the enclosed exhibit have been noted as to the merger. The exhibit is the list supplied by the representative of the companies, and verified by our computerized records. We have not adjudicated the case files to determine if the entity affected by the merger holds an interest in the leases identified, nor have we attempted to identify leases where the entity is the operator on the ground, maintaining no vested record title or operating rights interest. We are notifying the Minerals Management Service and all applicable BLM offices of the merger by a copy of this notice. If additional documentation for a change of operator is required by our Field Offices, you will be contacted by them.

By recognition of the merger the obligor is automatically changed by operation of law from River Gas Corporation to Phillips Petroleum Company on Letter of Credit No. P-207337 (BLM Bond No. UT0829). A rider to BLM Bond No. ES0048 assuming any and all liabilities of BLM Bond No. UT0829 must be submitted for approval to the Eastern States Office, Attn: Bill Forbes, 7450 Boston Boulevard, Springfield, VA 22153. After the rider is approved, the Letter of Credit will be returned to the financial institution that issued it.

ROBERT LOPEZ

Robert Lopez
Chief, Branch of
Minerals Adjudication

Enclosure
Exhibit of Leases

RECEIVED
FEB 02 2001
DIVISION OF
OIL, GAS AND MINING

cc: Moab Field Office
Vernal Field Office
Price Field Office
MMS–Reference Data Branch, MS 3130, P.O. Box 5860, Denver, CO 80217
State of Utah, DOGM, Attn: Jim Thompson (Ste. 1210), Box 145801, SLC, UT 84114
The Chase Manhattan Bank, Attn: Standby Letter of Credit Dept., 4 Chase Metrotech Center, 8th Floor
Brooklyn, NY 11245
Teresa Thompson (UT-931)
LaVerne Steah (UT-942)
Pruitt, Gushee & Bachtell, Attn: Frederick M. MacDonald, Suite 1850 Beneficial Life Tower,
Salt Lake City, Utah 84111-1495
BLM, Eastern States Office (Attn: Bill Forbes)

## RGC/Phillips Merger

## List of Affected BLM Leases and Rights-of-Way

### A. Oil & Gas Leases

| | | |
|---|---|---|
| UTU-47157 | UTU-70219 | UTU-75016 |
| UTU-49631 | UTU-70400 | UTU-75019 |
| UTU-50645 | UTU-71390 | UTU-75021 |
| UTU-51584 | UTU-72003 | UTU-75022 |
| UTU-53872 | UTU-72004 | UTU-76332 |
| UTU-57821 | UTU-72350 | UTU-76334 |
| UTU-60402 | UTU-72355 | UTU-77351 |
| UTU-60925 | UTU-72358 | UTU-77353 |
| UTU-61154 | UTU-72377 | UTU-77354 |
| UTU-61155 | UTU-72470 | UTU-78408 |
| UTU-61158 | UTU-72477 | UTU-78409 |
| UTU-61547 | UTU-72624 | UTU-78410 |
| UTU-61548 | UTU-72723 | UTU-78411 |
| UTU-62145 | UTU-72724 | UTU-78412 |
| UTU-62276 | UTU-72746 | UTU-78413 |
| UTU-65298 | UTU-73004 | UTU-78782 |
| UTU-65300 | UTU-73075 | UTU-78783 |
| UTU-65302 | UTU-73330 | UTU-79150 |
| UTU-65303 | UTU-73331 | UTU-79151 |
| UTU-67621 | UTU-73523 | UTU-79152 |
| UTU-67839 | UTU-73752 | UTU-79153 |
| UTU-67906 | UTU-73884 | UTU-79154 |
| UTU-68314 | UTU-74376 | UTU-79155 |
| UTU-69449 | UTU-75015 | UTU-79159 |

### B. Rights-of-Way

| | | |
|---|---|---|
| UTU-73226 | UTU-77141 | UTU-77976 |
| UTU-74319 | UTU-77141-01 | UTU-77989 |
| UTU-74320 | UTU-77151 | UTU-77989-01 |
| UTU-76610 | UTU-77151-01 | |
| UTU-76629 | UTU-77154 | |

Division of Oil, Gas and Mining

# OPERATOR CHANGE WORKSHEET

**ROUTING**

| | | |
|---|---|---|
| 1. GLH | | 4-KAS ✓ |
| 2. CDW ✓ | | 5-~~SLP~~ ✓ |
| 3. JLT | | 6-FILE |

Enter date after each listed item is completed

Change of Operator (Well Sold) — Designation of Agent

Operator Name Change (Only) — **X Merger**

The operator of the well(s) listed below has changed, effective: **12-31-2000**

| **FROM:** (Old Operator): | **TO:** ( New Operator): |
|---|---|
| RIVER GAS CORPORATION | PHILLIPS PETROLEUM COMPANY |
| Address: 6825 S. 5300 W. P. O. BOX 851 | Address: P. O. BOX 3368 |
| | |
| PRICE, UT 84501 | ENGLEWOOD, CO 80155-3368 |
| Phone: 1-(435)-613-9777 | Phone: 1-(720)-344-4984 |
| Account N1605 | Account N1475 |

**CA No.** **Unit:** **DRUNKARDS WASH**

## WELL(S)

| NAME | API NO. | ENTITY NO. | SEC. TWN RNG | LEASE TYPE | WELL TYPE | WELL STATUS |
|---|---|---|---|---|---|---|
| USA 20-399 | 43-007-30591 | 11256 | 20-15S-10E | FEDERAL | GW | P |
| USA 30-251 | 43-007-30403 | 11256 | 30-15S-10E | FEDERAL | GW | P |
| USA 30-289 | 43-007-30452 | 11256 | 30-15S-10E | FEDERAL | GW | P |
| USA 30-290 | 43-007-30453 | 11256 | 30-15S-10E | FEDERAL | GW | P |
| USA 31-310 | 43-007-30516 | 11256 | 31-15S-10E | FEDERAL | GW | P |
| USA 31-311 | 43-007-30517 | 11256 | 31-15S-10E | FEDERAL | GW | P |
| USA 01-264 | 43-015-30336 | 11256 | 01-16S-09E | FEDERAL | GW | P |
| USA 01-265 | 43-015-30337 | 11256 | 01-16S-09E | FEDERAL | GW | P |
| USA 01-312 | 43-015-30350 | 11256 | 01-16S-09E | FEDERAL | GW | P |
| USA 10-362 | 43-015-30424 | 11256 | 10-16S-09E | FEDERAL | GW | P |
| USA 10-317 | 43-015-30352 | 11256 | 10-16S-09E | FEDERAL | GW | P |
| USA 11-314 | 43-015-30353 | 11256 | 11-16S-09E | FEDERAL | GW | P |
| | | | | | | |
| | | | | | | |
| | | | | | | |
| | | | | | | |
| | | | | | | |
| | | | | | | |
| | | | | | | |
| | | | | | | |

## OPERATOR CHANGES DOCUMENTATION

1. (R649-8-10) Sundry or legal documentation was received from the **FORMER** operator on: 01/29/2001
2. (R649-8-10) Sundry or legal documentation was received from the **NEW** operator on: 01/29/2001
3. The new company has been checked through the **Department of Commerce, Division of Corporations Database on:** 02/15/2001

4. Is the new operator registered in the State of Utah: YES Business Number: 562960-0143

5. If **NO**, the operator was contacted contacted on: _____

6. **Federal and Indian Lease Wells:** The BLM and or the BIA has approved the (merger, name change, or operator change for all wells listed on Federal or Indian leases on: 01/30/2001

7. **Federal and Indian Units:** The BLM or BIA has approved the successor of unit operator for wells listed on: N/A

8. **Federal and Indian Communization Agreements ("CA"):** The BLM or the BIA has approved the operator change for all wells listed involved in a CA on: N/A

9. **Underground Injection Control ("UIC") Pro** The Division has approved UIC Form 5, **Transfer of Authority to Inject,** for the enhanced/secondary recovery unit/project for the water disposal well(s) listed on: _____

## DATA ENTRY:

1. Changes entered in the **Oil and Gas Database on:** 02/22/2001

2. Changes have been entered on the **Monthly Operator Change Spread Sheet on:** 02/22/2001

3. Bond information entered in RBDMS on: N/A

4. Fee wells attached to bond in RBDMS on: N/A

## STATE BOND VERIFICATION:

1. State well(s) covered by Bond No.: N/A

## FEE WELLS - BOND VERIFICATION/LEASE INTEREST OWNER NOTIFICATION:

1. (R649-3-1) The **NEW** operator of any fee well(s) listed has furnished a bond: N/A

2. The **FORMER** operator has requested a release of liability from their bond on: N/A
   The Division sent response by letter on: N/A

3. (R649-2-10) The **FORMER** operator of the Fee wells has been contacted and informed by a letter from the Division of their responsibility to notify all interest owners of this change on: N/A

## FILMING:

1. All attachments to this form have been **MICROFILMED** on: 3-16-01

## FILING:

1. **ORIGINALS/COPIES** of all attachments pertaining to each individual well have been filled in each well file on: _____

**COMMENTS:**

ConocoPhillips

Divisions of Oil, Gas, and Mining
Attn: Mr. John Baza
1594 West North Temple,
Suite 1210, P. O. Box 145801
Salt Lake City, UT 84114-5801

Re: Notice of Address Change, Merger and Name Change
Address Change effective **December 2, 2002**
Merger and Name Change effective **December 31, 2002**

Gentlemen:

1. Effective December 2, 2002, Phillips Petroleum Company will close its Englewood, Colorado Rocky Mountain Region office. After that time, all correspondence, notices and invoice for Land related matters should be directed to the address(es) noted below. Note that until December 31, 2002, all properties in which Phillips held an interest will continue to be operated by Phillips Petroleum Company, a wholly-owned subsidiary of ConocoPhillips.

2. On December 31, 2002, Phillips Petroleum Company and Conoco Inc. will merge, and the surviving corporation will be renamed "ConocoPhillips Company".

In accordance with the notice provisions of the Operating Agreements and other agreements, if any, between our companies, please adjust your company/organization records, effective for address purposes as of December 2, 2002, and for company name purposes, as of January 1, 2003, to reflect the following information for addressing and delivery of notices, invoicing and payment, and communications with ConocoPhillips Company. This will also apply to Lease Sale notices and other lease-related correspondence and notifications.

**U.S. Mail Address:**

ConocoPhillips Company
P.O. Box 2197
Houston, Texas 77252
Attn: Chief Landman,
San Juan/Rockies

**Physical Address & Overnight Delivery:**

ConocoPhillips Company
550 Westlake Park Blvd.
Three Westlake Park
3WL, Room WL 9000
Houston, Texas 77079
Attn: Chief Landman,
San Juan/Rockies

**All ballots and official notices/responses sent by facsimile transmission should be sent to the following contact:**

**Attn: Chief Landman,**
**San Juan/Rockies**

**Fax No.: 832-486-2688 or**
**832-486-2687**

Please contact the undersigned immediately if you have any questions. This notice does not apply to royalty inquiries, joint interest billings, or revenue remittances. Please continue to use the same addresses you are currently using for these matters

Sincerely, William Rainbolt

RECEIVED
DEC 0 2 2002
DIVISION OF
OIL, GAS AND MINING

STATE OF UTAH
DEPARTMENT OF NATURAL RESOURCES
DIVISION OF OIL, GAS AND MINING

FORM 9

# SUNDRY NOTICES AND REPORTS ON WELLS

Do not use this form for proposals to drill new wells, significantly deepen existing wells below current bottom-hole depth, reenter plugged wells, or to drill horizontal laterals. Use APPLICATION FOR PERMIT TO DRILL form for such proposals.

5. LEASE DESIGNATION AND SERIAL NUMBER:

6. IF INDIAN, ALLOTTEE OR TRIBE NAME:

7. UNIT or CA AGREEMENT NAME:

1. TYPE OF WELL: OIL WELL ☐ GAS WELL ☐ OTHER All

8. WELL NAME and NUMBER: See Attached List

2. NAME OF OPERATOR: Phillips Petroleum Company

9. API NUMBER: See List

3. ADDRESS OF OPERATOR: 980 Plaza Office CITY Bartlesville STATE OK ZIP 74004

PHONE NUMBER: (918) 661-4415

10. FIELD AND POOL, OR WILDCAT:

4. LOCATION OF WELL

FOOTAGES AT SURFACE: See Attached List

COUNTY:

QTR/QTR, SECTION, TOWNSHIP, RANGE, MERIDIAN:

STATE: UTAH

11. CHECK APPROPRIATE BOXES TO INDICATE NATURE OF NOTICE, REPORT, OR OTHER DATA

| TYPE OF SUBMISSION | TYPE OF ACTION | | |
|---|---|---|---|
| ☐ NOTICE OF INTENT (Submit in Duplicate) | ☐ ACIDIZE | ☐ DEEPEN | ☐ REPERFORATE CURRENT FORMATION |
| Approximate date work will start: | ☐ ALTER CASING | ☐ FRACTURE TREAT | ☐ SIDETRACK TO REPAIR WELL |
| | ☐ CASING REPAIR | ☐ NEW CONSTRUCTION | ☐ TEMPORARILY ABANDON |
| | ☐ CHANGE TO PREVIOUS PLANS | ☑ OPERATOR CHANGE | ☐ TUBING REPAIR |
| | ☐ CHANGE TUBING | ☐ PLUG AND ABANDON | ☐ VENT OR FLARE |
| ☑ SUBSEQUENT REPORT (Submit Original Form Only) | ☐ CHANGE WELL NAME | ☐ PLUG BACK | ☐ WATER DISPOSAL |
| Date of work completion: | ☐ CHANGE WELL STATUS | ☐ PRODUCTION (START/RESUME) | ☐ WATER SHUT-OFF |
| | ☐ COMMINGLE PRODUCING FORMATIONS | ☐ RECLAMATION OF WELL SITE | ☐ OTHER: |
| | ☐ CONVERT WELL TYPE | ☐ RECOMPLETE - DIFFERENT FORMATION | |

12. DESCRIBE PROPOSED OR COMPLETED OPERATIONS. Clearly show all pertinent details including dates, depths, volumes, etc.

Conoco Inc. was merged into Phillips Petroleum Company, the surviving corporation, on December 31, 2002. In connection with this merger and effective on the same date, the name of the surviving corporation was changed to "ConocoPhillips Company". We are requesting that a new Operator Number be assigned to ConocoPhillips Company.

Please send production reporting forms to Herb Henderson at ConocoPhillips Company, 315 S. Johnstone, 980 Plaza Office, Bartlesville, OK 74004. Herb's phone number is 918-661-4415.

Current Operator
Phillips Petroleum Company
Steve de Albuquerque

New Operator
ConocoPhillips Company
Yolanda Perez

RECEIVED
JAN 0 8 2003
DIV. OF OIL, GAS & MINING

NAME (PLEASE PRINT) Yolanda Perez TITLE Sr. Regulatory Analyst

SIGNATURE Yolanda Perez DATE 12/30/2002

(This space for State use only)

(5/2000) (See Instructions on Reverse Side)

ConocoPhillips

# SECRETARY'S CERTIFICATE

I, the undersigned, Jennifer M. Garcia, Assistant Secretary of ConocoPhillips Company, formerly Phillips Petroleum Company, organized and existing under and by virtue of the laws of the State of Delaware (the "Corporation"), hereby certify that:

1. As Assistant Secretary I am authorized to execute this certificate on behalf of the Corporation.

2. The attached photocopy of the Certificate of Amendment to the Restated Certificate of Incorporation of Phillips Petroleum Company (to be renamed ConocoPhillips Company) is a true and correct copy as filed in the office of the Secretary of State of Delaware on the 12th day of December 2002, with an effective date of January 1, 2003 and such Certificate of Amendment has not been modified, amended, rescinded or revoked and is in full force and effect as of the date hereof.

3. The attached photocopy of the Certificate of Merger of Conoco Inc. with and into ConocoPhillips Company is a true and correct copy as filed in the office of the Secretary of State of Delaware on the 12th day of December 2002, with an effective date of December 31, 2002 and such Certificate of Merger has not been modified, amended, rescinded or revoked and is in full force and effect as of the date hereof.

IN WITNESS WHEREOF, I have hereunto set my hand as Assistant Secretary and affixed the corporate seal of the Corporation this 7th day of January 2003.

Assistant Secretary
ConocoPhillips Company

STATE OF TEXAS §
§
COUNTY OF HARRIS §

This instrument was acknowledged before me on January 7, 2003, by Jennifer M. Garcia, Assistant Secretary of ConocoPhillips Company, a Delaware corporation, on behalf of said Corporation.

SUSAN F. SHORT NOTARY PUBLIC STATE OF TEXAS EXPIRES 11-12-2005

Notary Public

RECEIVED
JAN 0 8 2003
DIV. OF OIL, GAS & MINING

# Delaware



*The First State*

I, HARRIET SMITH WINDSOR, SECRETARY OF STATE OF THE STATE OF DELAWARE, DO HEREBY CERTIFY THE ATTACHED IS A TRUE AND CORRECT COPY OF THE CERTIFICATE OF AMENDMENT OF "PHILLIPS PETROLEUM COMPANY", CHANGING ITS NAME FROM "PHILLIPS PETROLEUM COMPANY" TO "CONOCOPHILLIPS COMPANY", FILED IN THIS OFFICE ON THE TWELFTH DAY OF DECEMBER, A.D. 2002, AT 1:41 O'CLOCK P.M.

AND I DO HEREBY FURTHER CERTIFY THAT THE EFFECTIVE DATE OF THE AFORESAID CERTIFICATE OF AMENDMENT IS THE THIRTY-FIRST DAY OF DECEMBER, A.D. 2002, AT 11 O'CLOCK P.M.

RECEIVED
JAN 0 8 2003
DIV. OF OIL, GAS & MINING

Harriet Smith Windsor

Harriet Smith Windsor, Secretary of State

0064324 8100

AUTHENTICATION: 2183360

030002793

DATE: 01-02-03

STATE OF DELAWARE
SECRETARY OF STATE
DIVISION OF CORPORATIONS
FILED 01:41 PM 12/12/2002
020763238 - 0064324

# CERTIFICATE OF AMENDMENT

**to the**

**RESTATED CERTIFICATE OF INCORPORATION**

**of**

**PHILLIPS PETROLEUM COMPANY**
**(to be renamed ConocoPhillips Company)**

Phillips Petroleum Company ("Phillips"), a corporation organized and existing under the General Corporation Law of the State of Delaware (the "DGCL"), hereby certifies that:

1. The amendments to Phillips' Restated Certificate of Incorporation set forth below were duly adopted in accordance with the provisions of Section 242 of the DGCL and have been consented to in writing by the sole stockholder of Phillips in accordance with Section 228 of the DGCL.

2. Phillips' Restated Certificate of Incorporation is hereby amended by deleting Article I thereof and replacing in lieu thereof a new Article I reading in its entirety as follows:

"The name of the corporation (which is hereinafter referred to as the "Corporation") is ConocoPhillips Company."

3. Phillips' Restated Certificate of Incorporation is hereby amended by deleting Section 1 of Article IV thereof and replacing in lieu thereof a new Section 1 reading in its entirety as follows:

"Section 1. The Corporation shall be authorized to issue 2,100 shares of capital stock, of which 2,100 shares shall be shares of Common Stock, $.01 par value ("Common Stock")."

4. Pursuant to Section 103(d) of the DGCL, this amendment will become effective at 11:00 p.m., Eastern time, on December 31, 2002.



RECEIVED
JAN 0 8 2003
DIV. OF OIL, GAS & MINING

IN WITNESS WHEREOF, Phillips has caused this certificate to be executed this 12th day of December, 2002.

PHILLIPS PETROLEUM COMPANY

By: _____
Name: Rick A. Harrington
Title: Senior Vice President, Legal, and General Counsel

HOU03:884504.1

RECEIVED
JAN 0 8 2003
DIV. OF OIL, GAS & MINING

# Delaware



*The First State*

I, HARRIET SMITH WINDSOR, SECRETARY OF STATE OF THE STATE OF DELAWARE, DO HEREBY CERTIFY THE ATTACHED IS A TRUE AND CORRECT COPY OF THE CERTIFICATE OF MERGER, WHICH MERGES:

"CONOCO INC.", A DELAWARE CORPORATION,

WITH AND INTO "CONOCOPHILLIPS COMPANY" UNDER THE NAME OF "CONOCOPHILLIPS COMPANY", A CORPORATION ORGANIZED AND EXISTING UNDER THE LAWS OF THE STATE OF DELAWARE, AS RECEIVED AND FILED IN THIS OFFICE THE TWELFTH DAY OF DECEMBER, A.D. 2002, AT 1:44 O'CLOCK P.M.

AND I DO HEREBY FURTHER CERTIFY THAT THE EFFECTIVE DATE OF THE AFORESAID CERTIFICATE OF MERGER IS THE THIRTY-FIRST DAY OF DECEMBER, A.D. 2002, AT 11:59 O'CLOCK P.M.

RECEIVED
JAN 0 8 2003
DIV. OF OIL, GAS & MINING

Harriet Smith Windsor

Harriet Smith Windsor, Secretary of State

0064324 8100M

AUTHENTICATION: 2183370

030002793

DATE: 01-02-03

STATE OF DELAWARE
SECRETARY OF STATE
DIVISION OF CORPORATIONS
FILED 01:44 PM 12/12/2002
020763253 - 0064324

# CERTIFICATE OF MERGER

**of**

**Conoco Inc.**
**(a Delaware corporation)**

**with and into**

**ConocoPhillips Company**
**(a Delaware corporation)**

Phillips Petroleum Company, a Delaware corporation to be renamed ConocoPhillips Company prior to the effective time of this certificate of merger (the "Surviving Corporation"), in compliance with the requirements of the General Corporation Law of the State of Delaware (the "DGCL") and desiring to effect a merger of Conoco Inc., a Delaware corporation formerly incorporated under the name Du Pont Holdings, Inc. (the "Merging Corporation," and together with the Surviving Corporation, the "Constituent Corporations"), with and into the Surviving Corporation, and acting by its duly authorized officer, DOES HEREBY CERTIFY that:

**First:** As of the date hereof, the name and state of incorporation of each of the Constituent Corporations of the merger are as follows:

| NAME | STATE OF INCORPORATION |
|---|---|
| PHILLIPS PETROLEUM COMPANY | Delaware |
| CONOCO INC. | Delaware |

**Second:** An agreement and plan of merger has been approved, adopted, certified, executed and acknowledged by each of the Constituent Corporations in accordance with the requirements of Section 251 of the DGCL;

**Third:** The name of the Surviving Corporation will be ConocoPhillips Company;

**Fourth:** The Certificate of Incorporation of ConocoPhillips Company immediately prior to the merger shall be the Certificate of Incorporation of the Surviving Corporation until such time as it may be amended in accordance with applicable law and the provisions thereof;

**Fifth:** The executed agreement and plan of merger is on file at an office of the Surviving Corporation, the address of which is 600 North Dairy Ashford, Houston, Texas 77079;

RECEIVED
JAN 0 8 2003
DIV. OF OIL, GAS & MINING

**Sixth:** A copy of the agreement and plan of merger will be furnished by the Surviving Corporation, on request and without cost, to any stockholder of any Constituent Corporation; and

**Seventh:** Pursuant to Section 103(d) of the DGCL, this certificate of merger will become effective at 11:59 p.m., Eastern time, on December 31, 2002.

Dated: December 12, 2002

**PHILLIPS PETROLEUM COMPANY**
(a Delaware corporation)

By:_____
Name: Rick A. Harrington
Title: Senior Vice President, Legal, and General Counsel

RECEIVED
JAN 0 8 2003
DIV. OF OIL, GAS & MINING

STATE OF UTAH
DEPARTMENT OF COMMERCE
REGISTRATION

CONOCOPHILLIPS COMPANY

EFFECTIVE 06/14/1946

EXPIRATION *RENEWAL

REFERENCE NUMBER(S), CLASSIFICATION(S) & DETAIL(S)

Corporation - Foreign - Profit
562960-0143

UNITED STATES CORP CO
CONOCOPHILLIPS COMPANY
GATEWAY TOWER EAST STE 900
10 EAST SOUTH TEMPLE
SLC UT 84133

RECEIVED
JAN 08 2003
DIV. OF OIL, GAS & MINING

# STATE OF UTAH
# DEPARTMENT OF COMMERCE
# DIVISION OF CORPORATIONS & COMMERCIAL CODE

## REGISTRATION

EFFECTIVE DATE: 06/14/1946

EXPIRATION DATE: *RENEWAL

ISSUED TO: CONOCOPHILLIPS COMPANY

THE GREAT SEAL OF THE STATE OF UTAH
INDUSTRY
1847
1896

REFERENCE NUMBER(S), CLASSIFICATION(S) & DETAIL(S)

562960-0143 Corporation - Foreign - Profit

*RENEWAL

You will need to renew your registration each anniversary date of the effective date.
Exceptions: DBAs and Business Trusts renew every three (3) years from the effective date.

Utah Well List as of 12/26/02

| API Well Number | Well Name | Well Type | Well Status | Sec | Twpn | Twpd | Rngn | Rngd |
|---|---|---|---|---|---|---|---|---|
| 43-007-30887-00-00 | ANDREEN 32-529 | Gas Well | APD | 32 | 14 | S | 10 | E |
| 43-007-30865-00-00 | COTNER 29-549 | Gas Well | APD | 29 | 14 | S | 10 | E |
| 43-007-30837-00-00 | DALLIN 32-615 | Gas Well | APD | 32 | 13 | S | 9 | E |
| 43-047-34551-00-00 | FED 43-24-3 #1 | Gas Well | APD | 24 | 10 | S | 17 | E |
| 43-047-33982-00-00 | FEDERAL 12-17 #1 | Gas Well | APD | 17 | 10 | S | 18 | E |
| 43-047-34471-00-00 | FEDERAL 12-29-7 1 | Gas Well | APD | 29 | 9 | S | 19 | E |
| 43-047-34472-00-00 | FEDERAL 31-31-6 1 | Gas Well | APD | 31 | 9 | S | 19 | E |
| 43-007-30864-00-00 | MCKENDRICK 29-548 | Gas Well | APD | 29 | 14 | S | 10 | E |
| 43-015-30512-00-00 | PPCO 19-379 | Gas Well | APD | 19 | 16 | S | 9 | E |
| 43-015-30515-00-00 | PPCO 24-562 | Gas Well | APD | 24 | 16 | S | 8 | E |
| 43-015-30548-00-00 | PPCO 30-605 | Gas Well | APD | 30 | 16 | S | 9 | E |
| 43-007-30888-00-00 | PRICE 32-438 | Gas Well | APD | 32 | 14 | S | 10 | E |
| 43-007-30813-00-00 | RITZAKIS 33-514 | Gas Well | APD | 33 | 13 | S | 9 | E |
| 43-007-30766-00-00 | RITZAKIS 33-516 | Gas Well | APD | 33 | 13 | S | 9 | E |
| 43-007-30838-00-00 | ROWLEY 32-616 | Gas Well | APD | 32 | 13 | S | 9 | E |
| 43-007-30863-00-00 | SCHMIDT 29-531 | Gas Well | APD | 29 | 14 | S | 10 | E |
| 43-007-30797-00-00 | SEELY 15-498 | Gas Well | APD | 15 | 14 | S | 8 | E |
| 43-007-30798-00-00 | SEELY 15-499 | Gas Well | APD | 15 | 14 | S | 8 | E |
| 43-007-30799-00-00 | SEELY 15-500 | Gas Well | APD | 15 | 14 | S | 8 | E |
| 43-007-30796-00-00 | SEELY 22-492 | Gas Well | APD | 22 | 14 | S | 8 | E |
| 43-007-30801-00-00 | SEELY 22-502 | Gas Well | APD | 22 | 14 | S | 8 | E |
| 43-007-30802-00-00 | SEELY 22-503 | Gas Well | APD | 22 | 14 | S | 8 | E |
| 43-007-30711-00-00 | USA 09-452 | Gas Well | APD | 9 | 15 | S | 8 | E |
| 43-015-30351-00-00 | USA 11-313 | Gas Well | APD | 11 | 16 | S | 9 | E |
| 43-015-30398-00-00 | USA 12-385 | Gas Well | APD | 12 | 16 | S | 9 | E |
| 43-015-30409-00-00 | USA 12-426 | Gas Well | APD | 12 | 16 | S | 9 | E |
| 43-007-30805-00-00 | USA 14-490 | Gas Well | APD | 14 | 14 | S | 8 | E |
| 43-007-30806-00-00 | USA 14-491 | Gas Well | APD | 14 | 14 | S | 8 | E |
| 43-007-30676-00-00 | USA 15-421 | Gas Well | APD | 15 | 15 | S | 8 | E |
| 43-015-30417-00-00 | USA 21-427 | Gas Well | APD | 21 | 16 | S | 9 | E |
| 43-015-30416-00-00 | USA 21-428 | Gas Well | APD | 21 | 16 | S | 9 | E |
| 43-015-30415-00-00 | USA 21-429 | Gas Well | APD | 21 | 16 | S | 9 | E |
| 43-007-30515-00-00 | USA 31-309 | Gas Well | APD | 31 | 15 | S | 10 | E |
| 43-007-30835-00-00 | USA 33-515 | Gas Well | APD | 33 | 13 | S | 9 | E |
| 43-007-30836-00-00 | USA 33-624 | Gas Well | APD | 33 | 13 | S | 9 | E |
| 43-007-30803-00-00 | USA 34-518 | Gas Well | APD | 34 | 14 | S | 8 | E |
| 43-007-30478-00-00 | UTAH 05-224 | Gas Well | APD | 5 | 15 | S | 9 | E |
| 43-015-30411-00-00 | UTAH 16-365 | Gas Well | APD | 16 | 16 | S | 9 | E |
| 43-015-30412-00-00 | UTAH 16-366 | Gas Well | APD | 16 | 16 | S | 9 | E |
| 43-015-30413-00-00 | UTAH 16-430 | Gas Well | APD | 16 | 16 | S | 9 | E |
| 43-015-30299-00-00 | UTAH 18-374 | Gas Well | APD | 18 | 16 | S | 9 | E |
| 43-015-30420-00-00 | UTAH 19-377 | Gas Well | APD | 19 | 16 | S | 9 | E |
| 43-015-30492-00-00 | UTAH 19-378 | Gas Well | APD | 19 | 16 | S | 9 | E |
| 43-007-30891-00-00 | UTAH 19-533 | Gas Well | APD | 19 | 14 | S | 10 | E |
| 43-015-30414-00-00 | UTAH 20-381 | Gas Well | APD | 20 | 16 | S | 9 | E |
| 43-015-30421-00-00 | UTAH 20-382 | Gas Well | APD | 20 | 16 | S | 9 | E |
| 43-015-30518-00-00 | UTAH 25-576 | Gas Well | APD | 25 | 16 | S | 8 | E |
| 43-015-30539-00-00 | UTAH 25-578 | Gas Well | APD | 25 | 16 | S | 8 | E |
| 43-015-30540-00-00 | UTAH 25-579 | Gas Well | APD | 25 | 16 | S | 8 | E |
| 43-007-30817-00-00 | UTAH 25-618 | Gas Well | APD | 25 | 13 | S | 9 | E |
| 43-015-30543-00-00 | UTAH 26-582 | Gas Well | APD | 26 | 16 | S | 8 | E |
| 43-015-30547-00-00 | UTAH 29-608 | Gas Well | APD | 29 | 16 | S | 9 | E |
| 43-007-30889-00-00 | UTAH 32-128 | Gas Well | APD | 32 | 14 | S | 10 | E |
| 43-007-30814-00-00 | UTAH 35-506 | Gas Well | APD | 35 | 13 | S | 9 | E |

Utah Well List as of 12/26/02

| API Well Number | Well Name | Well Type | Well Status | Sec | Twpn | Twpd | Rngn | Rngd |
|---|---|---|---|---|---|---|---|---|
| 43-047-33750-00-00 | FEDERAL 34-29 | Gas Well | P | 29 | 9 | S | 19 | E |
| 43-007-30782-00-00 | GAROFOLA 26-482 | Gas Well | P | 26 | 15 | S | 8 | E |
| 43-007-30335-00-00 | GIACOLETTO 11-113 | Gas Well | P | 11 | 14 | S | 9 | E |
| 43-007-30407-00-00 | GIACOLETTO 13-120 | Gas Well | P | 13 | 14 | S | 9 | E |
| 43-007-30345-00-00 | GIACOLETTO 14-121 | Gas Well | P | 14 | 14 | S | 9 | E |
| 43-007-30487-00-00 | HELPER & ASSOC 07-307 | Gas Well | P | 7 | 15 | S | 9 | E |
| 43-007-30459-00-00 | HELPER & ASSOC 18-236 | Gas Well | P | 18 | 15 | S | 9 | E |
| 43-007-30720-00-00 | HELPER & ASSOC 18-308 | Gas Well | P | 18 | 15 | S | 9 | E |
| 43-007-30412-00-00 | HELPER & ASSOC 8-232 | Gas Well | P | 8 | 15 | S | 9 | E |
| 43-007-30258-00-00 | HELPER & ASSOCIATES 7-84 | Gas Well | P | 7 | 15 | S | 9 | E |
| 43-007-30588-00-00 | JENSEN 16-132 | Gas Well | P | 16 | 15 | S | 10 | E |
| 43-007-30420-00-00 | KAKATSIDES 31-197 | Gas Well | P | 31 | 14 | S | 9 | E |
| 43-007-30296-00-00 | LDS 17-133 | Gas Well | P | 17 | 15 | S | 10 | E |
| 43-007-30323-00-00 | PAAR 16-146 | Gas Well | P | 16 | 14 | S | 9 | E |
| 43-047-34286-00-00 | PETES WASH 23-12 #1 | Gas Well | P | 12 | 10 | S | 17 | E |
| 43-007-30748-00-00 | PIERUCCI 25-461 | Gas Well | P | 25 | 15 | S | 8 | E |
| 43-007-30749-00-00 | PIERUCCI 25-462 | Gas Well | P | 25 | 15 | S | 8 | E |
| 43-007-30754-00-00 | PIERUCCI 26-463 | Gas Well | P | 26 | 15 | S | 8 | E |
| 43-007-30755-00-00 | PIERUCCI 26-464 | Gas Well | P | 26 | 15 | S | 8 | E |
| 43-007-30745-00-00 | PIERUCCI 26-481 | Gas Well | P | 26 | 15 | S | 8 | E |
| 43-007-30117-00-00 | PINNACLE PEAK 19-171 | Gas Well | P | 19 | 14 | S | 9 | E |
| 43-007-30845-00-00 | PMC 10-526 | Gas Well | P | 10 | 15 | S | 8 | E |
| 43-007-30282-00-00 | POWELL 19-104 | Gas Well | P | 19 | 15 | S | 10 | E |
| 43-007-30283-00-00 | POWELL 19-105 | Gas Well | P | 19 | 15 | S | 10 | E |
| 43-007-30346-00-00 | POWELL 30-173 | Gas Well | P | 30 | 15 | S | 10 | E |
| 43-015-30279-00-00 | PPCO 10-557 | Gas Well | P | 10 | 16 | S | 8 | E |
| 43-015-30494-00-00 | PPCO 15-555 | Gas Well | P | 15 | 16 | S | 8 | E |
| 43-007-30211-00-00 | PRETTYMAN 10-15-34 | Gas Well | P | 10 | 14 | S | 9 | E |
| 43-007-30340-00-00 | PRETTYMAN 11-114 | Gas Well | P | 11 | 14 | S | 9 | E |
| 43-007-30653-00-00 | RGC 21-331 | Gas Well | P | 21 | 15 | S | 9 | E |
| 43-007-30743-00-00 | RGC 21-332 | Gas Well | P | 21 | 15 | S | 9 | E |
| 43-007-30747-00-00 | RGC 25-460 | Gas Well | P | 25 | 15 | S | 8 | E |
| 43-007-30559-00-00 | RGC 28-318 | Gas Well | P | 28 | 15 | S | 9 | E |
| 43-007-30518-00-00 | RGC 28-319 | Gas Well | P | 28 | 15 | S | 9 | E |
| 43-007-30509-00-00 | RITZAKIS 03-408 | Gas Well | P | 3 | 14 | S | 9 | E |
| 43-007-30473-00-00 | RITZAKIS 5-304 | Gas Well | P | 5 | 14 | S | 9 | E |
| 43-007-30474-00-00 | RITZAKIS 5-305 | Gas Well | P | 5 | 14 | S | 9 | E |
| 43-007-30475-00-00 | RITZAKIS 8-298 | Gas Well | P | 8 | 14 | S | 9 | E |
| 43-007-30479-00-00 | RITZAKIS 8-299 | Gas Well | P | 8 | 14 | S | 9 | E |
| 43-007-30476-00-00 | RITZAKIS 8-300 | Gas Well | P | 8 | 14 | S | 9 | E |
| 43-007-30374-00-00 | ROBERTSON 32-127 | Gas Well | P | 32 | 14 | S | 10 | E |
| 43-007-30610-00-00 | SAMPINOS 16-131 | Gas Well | P | 16 | 15 | S | 10 | E |
| 43-007-30723-00-00 | SAMPINOS 16-454 | Gas Well | P | 16 | 15 | S | 10 | E |
| 43-007-30765-00-00 | SAMPINOS 16-521 | Gas Well | P | 16 | 15 | S | 10 | E |
| 43-007-30800-00-00 | SEELY 22-501 | Gas Well | P | 22 | 14 | S | 8 | E |
| 43-007-30130-00-00 | ST OF UT 25-9-1 | Gas Well | P | 25 | 14 | S | 9 | E |
| 43-007-30142-00-00 | ST OF UT 36-3-4 | Gas Well | P | 36 | 14 | S | 9 | E |
| 43-007-30116-00-00 | STELLA-HAMAKER 10-174 | Gas Well | P | 10 | 15 | S | 8 | E |
| 43-007-30746-00-00 | TABOR 23-468 | Gas Well | P | 23 | 15 | S | 8 | E |
| 43-007-30319-00-00 | TELONIS 15-142 | Gas Well | P | 15 | 14 | S | 9 | E |
| 43-007-30322-00-00 | TELONIS 16-145 | Gas Well | P | 16 | 14 | S | 9 | E |
| 43-007-30300-00-00 | TELONIS 19-150 | Gas Well | P | 19 | 14 | S | 9 | E |
| 43-007-30299-00-00 | TELONIS 19-151 | Gas Well | P | 19 | 14 | S | 9 | E |
| 43-007-30327-00-00 | TELONIS 20-152 | Gas Well | P | 20 | 14 | S | 9 | E |

Utah Well List as of 12/26/02

| API Well Number | Well Name | Well Type | Well Status | Sec | Twpn | Twpd | Rngn | Rngd |
|---|---|---|---|---|---|---|---|---|
| 43-007-30631-00-00 | USA 13-419 | Gas Well | P | 13 | 15 | S | 8 | E |
| 43-007-30707-00-00 | USA 13-447 | Gas Well | P | 13 | 14 | S | 8 | E |
| 43-007-30706-00-00 | USA 13-470 | Gas Well | P | 13 | 14 | S | 8 | E |
| 43-007-30789-00-00 | USA 13-474 | Gas Well | P | 13 | 14 | S | 8 | E |
| 43-007-30790-00-00 | USA 13-475 | Gas Well | P | 13 | 14 | S | 8 | E |
| 43-007-30568-00-00 | USA 13-91 | Gas Well | P | 13 | 14 | S | 9 | E |
| 43-007-30404-00-00 | USA 14-122 | Gas Well | P | 14 | 14 | S | 9 | E |
| 43-015-30418-00-00 | USA 1-425 | Gas Well | P | 1 | 16 | S | 9 | E |
| 43-007-30579-00-00 | USA 14-325 | Gas Well | P | 14 | 15 | S | 8 | E |
| 43-007-30634-00-00 | USA 14-386 | Gas Well | P | 14 | 15 | S | 8 | E |
| 43-007-30646-00-00 | USA 14-416 | Gas Well | P | 14 | 15 | S | 8 | E |
| 43-007-30647-00-00 | USA 14-417 | Gas Well | P | 14 | 15 | S | 8 | E |
| 43-007-30791-00-00 | USA 14-476 | Gas Well | P | 14 | 14 | S | 8 | E |
| 43-007-30792-00-00 | USA 14-477 | Gas Well | P | 14 | 14 | S | 8 | E |
| 43-007-30529-00-00 | USA 14-74 | Gas Well | P | 14 | 14 | S | 9 | E |
| 43-007-30263-00-00 | USA 14-75 | Gas Well | P | 14 | 14 | S | 9 | E |
| 43-007-30450-00-00 | USA 15-176 | Gas Well | P | 15 | 14 | S | 9 | E |
| 43-007-30423-00-00 | USA 15-177 | Gas Well | P | 15 | 14 | S | 9 | E |
| 43-007-30690-00-00 | USA 15-420 | Gas Well | P | 15 | 15 | S | 8 | E |
| 43-007-30691-00-00 | USA 15-422 | Gas Well | P | 15 | 15 | S | 8 | E |
| 43-007-30264-00-00 | USA 15-88 | Gas Well | P | 15 | 14 | S | 9 | E |
| 43-007-30422-00-00 | USA 17-179 | Gas Well | P | 17 | 14 | S | 9 | E |
| 43-007-30622-00-00 | USA 17-180A | Gas Well | P | 17 | 14 | S | 9 | E |
| 43-007-30618-00-00 | USA 18-181 | Gas Well | P | 18 | 14 | S | 9 | E |
| 43-007-30417-00-00 | USA 18-182 | Gas Well | P | 18 | 14 | S | 9 | E |
| 43-007-30619-00-00 | USA 18-435 | Gas Well | P | 18 | 14 | S | 9 | E |
| 43-007-30393-00-00 | USA 19-222 | Gas Well | P | 19 | 15 | S | 10 | E |
| 43-007-30392-00-00 | USA 19-73 | Gas Well | P | 19 | 15 | S | 10 | E |
| 43-007-30448-00-00 | USA 20-287 | Gas Well | P | 20 | 15 | S | 10 | E |
| 43-007-30451-00-00 | USA 20-288 | Gas Well | P | 20 | 15 | S | 10 | E |
| 43-007-30590-00-00 | USA 20-398 | Gas Well | P | 20 | 15 | S | 10 | E |
| 43-007-30591-00-00 | USA 20-399 | Gas Well | P | 20 | 15 | S | 10 | E |
| 43-007-30424-00-00 | USA 21-184 | Gas Well | P | 21 | 14 | S | 9 | E |
| 43-007-30425-00-00 | USA 21-35 | Gas Well | P | 21 | 14 | S | 9 | E |
| 43-007-30426-00-00 | USA 22-185 | Gas Well | P | 22 | 14 | S | 9 | E |
| 43-007-30477-00-00 | USA 22-186 | Gas Well | P | 22 | 14 | S | 9 | E |
| 43-007-30700-00-00 | USA 22-466 | Gas Well | P | 22 | 15 | S | 8 | E |
| 43-007-30611-00-00 | USA 23-423 | Gas Well | P | 23 | 14 | S | 8 | E |
| 43-007-30650-00-00 | USA 23-445 | Gas Well | P | 23 | 15 | S | 8 | E |
| 43-007-30704-00-00 | USA 23-451 | Gas Well | P | 23 | 15 | S | 8 | E |
| 43-007-30503-00-00 | USA 23-467 | Gas Well | P | 23 | 15 | S | 8 | E |
| 43-007-30793-00-00 | USA 23-478 | Gas Well | P | 23 | 14 | S | 8 | E |
| 43-007-30794-00-00 | USA 23-479 | Gas Well | P | 23 | 14 | S | 8 | E |
| 43-007-30795-00-00 | USA 23-480 | Gas Well | P | 23 | 14 | S | 8 | E |
| 43-007-30469-00-00 | USA 24-183 | Gas Well | P | 24 | 14 | S | 8 | E |
| 43-007-30612-00-00 | USA 24-387 | Gas Well | P | 24 | 14 | S | 8 | E |
| 43-007-30613-00-00 | USA 24-388 | Gas Well | P | 24 | 14 | S | 8 | E |
| 43-007-30651-00-00 | USA 24-443 | Gas Well | P | 24 | 15 | S | 8 | E |
| 43-007-30648-00-00 | USA 24-444 | Gas Well | P | 24 | 15 | S | 8 | E |
| 43-007-30708-00-00 | USA 24-446 | Gas Well | P | 24 | 14 | S | 8 | E |
| 43-007-30652-00-00 | USA 24-448 | Gas Well | P | 24 | 15 | S | 8 | E |
| 43-007-30705-00-00 | USA 24-449 | Gas Well | P | 24 | 15 | S | 8 | E |
| 43-007-30505-00-00 | USA 25-459 | Gas Well | P | 25 | 15 | S | 8 | E |
| 43-007-30614-00-00 | USA 26-393 | Gas Well | P | 26 | 14 | S | 8 | E |

## Utah Well List as of 12/26/02

| API Well Number | Well Name | Well Type | Well Status | Sec | Twpn | Twpd | Rngn | Rngd |
|---|---|---|---|---|---|---|---|---|
| 43-007-30430-00-00 | UTAH 06-223 | Gas Well | P | 6 | 15 | S | 9 | E |
| 43-007-30562-00-00 | UTAH 06-330 | Gas Well | P | 6 | 15 | S | 9 | E |
| 43-007-30716-00-00 | UTAH 06-483 | Gas Well | P | 6 | 15 | S | 9 | E |
| 43-007-30409-00-00 | UTAH 07-234 | Gas Well | P | 7 | 15 | S | 9 | E |
| 43-007-30421-00-00 | UTAH 07-235 | Gas Well | P | 7 | 15 | S | 9 | E |
| 43-007-30411-00-00 | UTAH 08-231 | Gas Well | P | 8 | 15 | S | 9 | E |
| 43-007-30488-00-00 | UTAH 08-233 | Gas Well | P | 8 | 15 | S | 9 | E |
| 43-015-30464-00-00 | UTAH 08-354 | Gas Well | P | 8 | 16 | S | 9 | E |
| 43-015-30378-00-00 | UTAH 08-355 | Gas Well | P | 8 | 16 | S | 9 | E |
| 43-015-30379-00-00 | UTAH 08-356 | Gas Well | P | 8 | 16 | S | 9 | E |
| 43-015-30380-00-00 | UTAH 08-357 | Gas Well | P | 8 | 16 | S | 9 | E |
| 43-007-30449-00-00 | UTAH 09-227 | Gas Well | P | 9 | 15 | S | 9 | E |
| 43-007-30561-00-00 | UTAH 09-329 | Gas Well | P | 9 | 15 | S | 9 | E |
| 43-015-30300-00-00 | UTAH 09-358 | Gas Well | P | 9 | 16 | S | 9 | E |
| 43-015-30407-00-00 | UTAH 09-359 | Gas Well | P | 9 | 16 | S | 9 | E |
| 43-015-30397-00-00 | UTAH 09-360 | Gas Well | P | 9 | 16 | S | 9 | E |
| 43-015-30408-00-00 | UTAH 09-361 | Gas Well | P | 9 | 16 | S | 9 | E |
| 43-007-30580-00-00 | UTAH 09-412 | Gas Well | P | 9 | 15 | S | 10 | E |
| 43-007-30605-00-00 | UTAH 09-413 | Gas Well | P | 9 | 15 | S | 10 | E |
| 43-007-30657-00-00 | UTAH 09-450 | Gas Well | P | 9 | 15 | S | 10 | E |
| 43-007-30722-00-00 | UTAH 09-453 | Gas Well | P | 9 | 15 | S | 10 | E |
| 43-007-30302-00-00 | UTAH 10-01-36 | Gas Well | P | 10 | 15 | S | 9 | E |
| 43-007-30298-00-00 | UTAH 10-219 | Gas Well | P | 10 | 15 | S | 9 | E |
| 43-007-30432-00-00 | UTAH 10-220 | Gas Well | P | 10 | 15 | S | 9 | E |
| 43-007-30303-00-00 | UTAH 10-221 | Gas Well | P | 10 | 15 | S | 9 | E |
| 43-007-30228-00-00 | UTAH 11-50 | Gas Well | P | 11 | 15 | S | 9 | E |
| 43-007-30229-00-00 | UTAH 11-51 | Gas Well | P | 11 | 15 | S | 9 | E |
| 43-007-30230-00-00 | UTAH 11-52 | Gas Well | P | 11 | 15 | S | 9 | E |
| 43-007-30231-00-00 | UTAH 11-53 | Gas Well | P | 11 | 15 | S | 9 | E |
| 43-007-30467-00-00 | UTAH 1-209 | Gas Well | P | 1 | 15 | S | 8 | E |
| 43-007-30210-00-00 | UTAH 12-15-37 | Gas Well | P | 12 | 15 | S | 9 | E |
| 43-007-30232-00-00 | UTAH 12-54 | Gas Well | P | 12 | 15 | S | 9 | E |
| 43-007-30233-00-00 | UTAH 12-55 | Gas Well | P | 12 | 15 | S | 9 | E |
| 43-007-30234-00-00 | UTAH 12-56 | Gas Well | P | 12 | 15 | S | 9 | E |
| 43-015-30493-00-00 | UTAH 13-376 | Gas Well | P | 13 | 16 | S | 8 | E |
| 43-015-30301-00-00 | UTAH 13-550 | Gas Well | P | 13 | 16 | S | 8 | E |
| 43-007-30243-00-00 | UTAH 13-65 | Gas Well | P | 13 | 15 | S | 9 | E |
| 43-007-30244-00-00 | UTAH 13-66 | Gas Well | P | 13 | 15 | S | 9 | E |
| 43-007-30245-00-00 | UTAH 13-67 | Gas Well | P | 13 | 15 | S | 9 | E |
| 43-007-30246-00-00 | UTAH 13-68 | Gas Well | P | 13 | 15 | S | 9 | E |
| 43-007-30439-00-00 | UTAH 13-92 | Gas Well | P | 13 | 14 | S | 9 | E |
| 43-007-30220-00-00 | UTAH 1-42 | Gas Well | P | 1 | 15 | S | 9 | E |
| 43-007-30221-00-00 | UTAH 1-43 | Gas Well | P | 1 | 15 | S | 9 | E |
| 43-007-30222-00-00 | UTAH 1-44 | Gas Well | P | 1 | 15 | S | 9 | E |
| 43-007-30223-00-00 | UTAH 1-45 | Gas Well | P | 1 | 15 | S | 9 | E |
| 43-015-30330-00-00 | UTAH 14-551 | Gas Well | P | 14 | 16 | S | 8 | E |
| 43-015-30331-00-00 | UTAH 14-552 | Gas Well | P | 14 | 16 | S | 8 | E |
| 43-007-30239-00-00 | UTAH 14-61 | Gas Well | P | 14 | 15 | S | 9 | E |
| 43-007-30240-00-00 | UTAH 14-62 | Gas Well | P | 14 | 15 | S | 9 | E |
| 43-007-30241-00-00 | UTAH 14-63 | Gas Well | P | 14 | 15 | S | 9 | E |
| 43-007-30242-00-00 | UTAH 14-64 | Gas Well | P | 14 | 15 | S | 9 | E |
| 43-015-30334-00-00 | UTAH 15-553 | Gas Well | P | 15 | 16 | S | 8 | E |
| 43-007-30416-00-00 | UTAH 17-101 | Gas Well | P | 17 | 15 | S | 10 | E |
| 43-007-30277-00-00 | UTAH 17-102 | Gas Well | P | 17 | 15 | S | 10 | E |

Utah Well List as of 12/26/02

| API Well Number | Well Name | Well Type | Well Status | Sec | Twpn | Twpd | Rngn | Rngd |
|---|---|---|---|---|---|---|---|---|
| 43-007-30255-00-00 | UTAH 24-80 | Gas Well | P | 24 | 15 | S | 9 | E |
| 43-007-30256-00-00 | UTAH 24-81 | Gas Well | P | 24 | 15 | S | 9 | E |
| 43-007-30267-00-00 | UTAH 24-86 | Gas Well | P | 24 | 15 | S | 9 | E |
| 43-007-30375-00-00 | UTAH 24-87 | Gas Well | P | 24 | 15 | S | 9 | E |
| 43-007-30227-00-00 | UTAH 2-49 | Gas Well | P | 2 | 15 | S | 9 | E |
| 43-007-30157-00-00 | UTAH 25-11-7 | Gas Well | P | 25 | 14 | S | 9 | E |
| 43-007-30399-00-00 | UTAH 25-134 | Gas Well | P | 25 | 15 | S | 9 | E |
| 43-007-30400-00-00 | UTAH 25-252 | Gas Well | P | 25 | 15 | S | 9 | E |
| 43-007-30401-00-00 | UTAH 25-253 | Gas Well | P | 25 | 15 | S | 9 | E |
| 43-007-30402-00-00 | UTAH 25-254 | Gas Well | P | 25 | 15 | S | 9 | E |
| 43-007-30600-00-00 | UTAH 25-389 | Gas Well | P | 25 | 14 | S | 8 | E |
| 43-007-30599-00-00 | UTAH 25-390 | Gas Well | P | 25 | 14 | S | 8 | E |
| 43-007-30658-00-00 | UTAH 25-391 | Gas Well | P | 25 | 14 | S | 8 | E |
| 43-007-30602-00-00 | UTAH 25-392 | Gas Well | P | 25 | 14 | S | 8 | E |
| 43-007-30206-00-00 | UTAH 25-4-33 | Gas Well | P | 25 | 14 | S | 9 | E |
| 43-015-30519-00-00 | UTAH 25-577 | Gas Well | P | 25 | 16 | S | 8 | E |
| 43-007-30156-00-00 | UTAH 25-7-6 | Gas Well | P | 25 | 14 | S | 9 | E |
| 43-007-30204-00-00 | UTAH 26-11-25 | Gas Well | P | 26 | 14 | S | 9 | E |
| 43-007-30205-00-00 | UTAH 26-1-23 | Gas Well | P | 26 | 14 | S | 9 | E |
| 43-007-30181-00-00 | UTAH 26-16-8 | Gas Well | P | 26 | 14 | S | 9 | E |
| 43-007-30446-00-00 | UTAH 26-255 | Gas Well | P | 26 | 15 | S | 9 | E |
| 43-007-30445-00-00 | UTAH 26-256 | Gas Well | P | 26 | 15 | S | 9 | E |
| 43-007-30444-00-00 | UTAH 26-257 | Gas Well | P | 26 | 15 | S | 9 | E |
| 43-007-30514-00-00 | UTAH 26-267 | Gas Well | P | 26 | 15 | S | 9 | E |
| 43-015-30541-00-00 | UTAH 26-580 | Gas Well | P | 26 | 16 | S | 8 | E |
| 43-015-30542-00-00 | UTAH 26-581 | Gas Well | P | 26 | 16 | S | 8 | E |
| 43-015-30544-00-00 | UTAH 26-583 | Gas Well | P | 26 | 16 | S | 8 | E |
| 43-007-30202-00-00 | UTAH 26-6-24 | Gas Well | P | 26 | 14 | S | 9 | E |
| 43-007-30395-00-00 | UTAH 27-187 | Gas Well | P | 27 | 14 | S | 9 | E |
| 43-007-30292-00-00 | UTAH 27-188 | Gas Well | P | 27 | 14 | S | 9 | E |
| 43-007-30457-00-00 | UTAH 27-268 | Gas Well | P | 27 | 15 | S | 9 | E |
| 43-007-30458-00-00 | UTAH 27-269 | Gas Well | P | 27 | 15 | S | 9 | E |
| 43-007-30712-00-00 | UTAH 27-457 | Gas Well | P | 27 | 14 | S | 8 | E |
| 43-007-30714-00-00 | UTAH 27-458 | Gas Well | P | 27 | 14 | S | 8 | E |
| 43-007-30777-00-00 | UTAH 27-520 | Gas Well | P | 27 | 14 | S | 8 | E |
| 43-015-30545-00-00 | UTAH 27-584 | Gas Well | P | 27 | 16 | S | 8 | E |
| 43-007-30193-00-00 | UTAH 27-8-29 | Gas Well | P | 27 | 14 | S | 9 | E |
| 43-007-30186-00-00 | UTAH 27-9-30 | Gas Well | P | 27 | 14 | S | 9 | E |
| 43-007-30396-00-00 | UTAH 28-189 | Gas Well | P | 28 | 14 | S | 9 | E |
| 43-007-30397-00-00 | UTAH 28-190 | Gas Well | P | 28 | 14 | S | 9 | E |
| 43-007-30293-00-00 | UTAH 28-191 | Gas Well | P | 28 | 14 | S | 9 | E |
| 43-007-30294-00-00 | UTAH 28-192 | Gas Well | P | 28 | 14 | S | 9 | E |
| 43-007-30551-00-00 | UTAH 28-320 | Gas Well | P | 28 | 15 | S | 9 | E |
| 43-007-30560-00-00 | UTAH 28-321 | Gas Well | P | 28 | 15 | S | 9 | E |
| 43-007-30405-00-00 | UTAH 29-193 | Gas Well | P | 29 | 14 | S | 9 | E |
| 43-007-30427-00-00 | UTAH 29-194 | Gas Well | P | 29 | 14 | S | 9 | E |
| 43-007-30739-00-00 | UTAH 29-339 | Gas Well | P | 29 | 15 | S | 9 | E |
| 43-007-30740-00-00 | UTAH 29-340 | Gas Well | P | 29 | 15 | S | 9 | E |
| 43-007-30741-00-00 | UTAH 29-341 | Gas Well | P | 29 | 15 | S | 9 | E |
| 43-007-30742-00-00 | UTAH 29-342 | Gas Well | P | 29 | 15 | S | 9 | E |
| 43-007-30262-00-00 | UTAH 30-125 | Gas Well | P | 30 | 14 | S | 10 | E |
| 43-007-30185-00-00 | UTAH 30-13-14 | Gas Well | P | 30 | 14 | S | 10 | E |
| 43-007-30265-00-00 | UTAH 30-195 | Gas Well | P | 30 | 14 | S | 9 | E |
| 43-007-30344-00-00 | UTAH 30-196 | Gas Well | P | 30 | 14 | S | 9 | E |

## Utah Well List as of 12/26/02

| API Well Number | Well Name | Well Type | Well Status | Sec | Twpn | Twpd | Rngn | Rngd |
|---|---|---|---|---|---|---|---|---|
| 43-007-30178-00-00 | UTAH 36-1-2 | Gas Well | P | 36 | 14 | S | 9 | E |
| 43-007-30341-00-00 | UTAH 36-135 | Gas Well | P | 36 | 15 | S | 9 | E |
| 43-007-30343-00-00 | UTAH 36-136 | Gas Well | P | 36 | 15 | S | 9 | E |
| 43-007-30342-00-00 | UTAH 36-137 | Gas Well | P | 36 | 15 | S | 9 | E |
| 43-007-30315-00-00 | UTAH 36-162 | Gas Well | P | 36 | 14 | S | 8 | E |
| 43-007-30316-00-00 | UTAH 36-163 | Gas Well | P | 36 | 14 | S | 8 | E |
| 43-007-30317-00-00 | UTAH 36-164 | Gas Well | P | 36 | 14 | S | 8 | E |
| 43-007-30318-00-00 | UTAH 36-165 | Gas Well | P | 36 | 14 | S | 8 | E |
| 43-007-30144-00-00 | UTAH 36-9-5 | Gas Well | P | 36 | 14 | S | 9 | E |
| 43-015-30341-00-00 | UTAH 4-280 | Gas Well | P | 4 | 16 | S | 9 | E |
| 43-015-30342-00-00 | UTAH 4-282 | Gas Well | P | 4 | 16 | S | 9 | E |
| 43-007-30384-00-00 | UTAH 5-205 | Gas Well | P | 5 | 15 | S | 9 | E |
| 43-007-30269-00-00 | UTAH 5-94 | Gas Well | P | 5 | 15 | S | 10 | E |
| 43-007-30270-00-00 | UTAH 5-95 | Gas Well | P | 5 | 15 | S | 10 | E |
| 43-007-30271-00-00 | UTAH 5-96 | Gas Well | P | 5 | 15 | S | 10 | E |
| 43-007-30217-00-00 | UTAH 6-38 | Gas Well | P | 6 | 15 | S | 10 | E |
| 43-007-30218-00-00 | UTAH 6-39 | Gas Well | P | 6 | 15 | S | 10 | E |
| 43-007-30219-00-00 | UTAH 6-40 | Gas Well | P | 6 | 15 | S | 10 | E |
| 43-007-30254-00-00 | UTAH 6-41 | Gas Well | P | 6 | 15 | S | 10 | E |
| 43-007-30235-00-00 | UTAH 7-57 | Gas Well | P | 7 | 15 | S | 10 | E |
| 43-007-30236-00-00 | UTAH 7-58 | Gas Well | P | 7 | 15 | S | 10 | E |
| 43-007-30237-00-00 | UTAH 7-59 | Gas Well | P | 7 | 15 | S | 10 | E |
| 43-007-30238-00-00 | UTAH 7-60 | Gas Well | P | 7 | 15 | S | 10 | E |
| 43-007-30275-00-00 | UTAH 8-100 | Gas Well | P | 8 | 15 | S | 10 | E |
| 43-007-30410-00-00 | UTAH 8-230 | Gas Well | P | 8 | 15 | S | 9 | E |
| 43-007-30272-00-00 | UTAH 8-97 | Gas Well | P | 8 | 15 | S | 10 | E |
| 43-007-30285-00-00 | UTAH 8-98X | Gas Well | P | 8 | 15 | S | 10 | E |
| 43-007-30274-00-00 | UTAH 8-99 | Gas Well | P | 8 | 15 | S | 10 | E |
| 43-007-30413-00-00 | UTAH 9-228 | Gas Well | P | 9 | 15 | S | 9 | E |
| 43-007-30414-00-00 | UTAH 9-229 | Gas Well | P | 9 | 15 | S | 9 | E |
| 43-007-30279-00-00 | WILLIAMS 30-78 | Gas Well | P | 30 | 14 | S | 10 | E |
| 43-007-30481-00-00 | WOOLSTENHULME 05-266 | Gas Well | P | 5 | 15 | S | 10 | E |
| 43-015-30250-00-00 | UTAH 16-110 | Gas Well | Shut_In | 16 | 16 | S | 9 | E |

# United States Department of the Interior

BUREAU OF LAND MANAGEMENT
Eastern States Office
7450 Boston Boulevard
Springfield, Virginia 22153

IN REPLY REFER TO
3106.8(932.34)WF

January 16, 2003

NOTICE

| | | |
|---|---|---|
| ConocoPhillips Company<br>P.O. Box 7500<br>Bartlesville, Oklahoma 74005 | :<br>:<br>: | Oil & Gas Leases |

Merger/Name Change Recognized

Acceptable evidence was received in this office on January 14, 2003, concerning the change of name of Phillips Petroleum Company to **ConocoPhillips Company** and the merger of **Conoco Incorporated** into **ConocoPhillips Company** on Federal oil and gas leases, with **ConocoPhillips Company being the surviving entity.**

The Secretary of the State of Delaware certified the effective date of this merger effective December 31, 2002.

The oil and gas lease files identified on the enclosed exhibit have been noted to the merger. The exhibit was compiled from a list of leases obtained from your list of leases. Eastern States has not abstracted the lease files to determine if the entities affected by this merger hold an interest in the leases identified nor have we attempted to identify leases where the entities are the operator on the ground maintaining no vested record title or operating rights interest. We are notifying the Minerals Management Service and all applicable Bureau of Land Management offices of this merger and name change by a copy of this notice. If additional documentation for changes of operator are required by our Field Offices, you will be contacted by them.

If you identify other leases in which the merging entity maintain an interest, please contact this office and we will appropriately document those files with a copy of this Notice.

By Operation of law the name of the principal on Nationwide Oil and Gas Bond held by Conoco Incorporated (ES0085) has been changed to ConocoPhillips Company.

If you have any questions, please contact Bill Forbes at 703-440-1536.

S/ Wilbert B. Forbes

Wilbert B. Forbes
Land Law Examiner
Branch of Use Authorization
Division of Resources Planning, Use
and Protection

bc: JFO, BLM State Offices, MMS, ES RF, 930 RF, ES-932:
Bforbes:wbf:01/16/03:440-1536/ConocoPhillips Co

Division of Oil, Gas and Mining

# OPERATOR CHANGE WORKSHEET

| ROUTING |
|---|
| 1. GLH |
| 2. CDW |
| 3. FILE |

Change of Operator (Well Sold) — Designation of Agent/Operator

Operator Name Change — X **Merger**

The operator of the well(s) listed below has changed, effective: **12-31-02**

| **FROM:** (Old Operator): | **TO:** ( New Operator): |
|---|---|
| PHILLIPS PETROLEUM COMPANY | CONOCOPHILLIPS COMPANY |
| Address: 980 PLAZA OFFICE | Address: P O BOX 2197, WL3 4066 |
| | |
| BARTLESVILLE, OK 74004 | HOUSTON, TX 77252 |
| Phone: 1-(918)-661-4415 | Phone: 1-(832)-486-2329 |
| Account No. N1475 | Account No. N2335 |

**CA No.** **Unit:** **DRUNKARDS WASH**

## WELL(S)

| NAME | SEC TWN RNG | API NO | ENTITY NO | LEASE TYPE | WELL TYPE | WELL STATUS |
|---|---|---|---|---|---|---|
| UTAH 18-72 | 18-15S-10E | 43-007-30250 | 11256 | STATE | GW | P |
| POWELL 19-104 | 19-15S-10E | 43-007-30282 | 11256 | FEE | GW | P |
| POWELL 19-105 | 19-15S-10E | 43-007-30283 | 11256 | FEE | GW | P |
| USA 19-73 | 19-15S-10E | 43-007-30392 | 11256 | FEDERAL | GW | P |
| USA 19-222 | 19-15S-10E | 43-007-30393 | 11256 | FEDERAL | GW | P |
| USA 20-287 | 20-15S-10E | 43-007-30448 | 11256 | FEDERAL | GW | P |
| USA 20-288 | 20-15S-10E | 43-007-30451 | 11256 | FEDERAL | GW | P |
| USA 20-398 | 20-15S-10E | 43-007-30590 | 11256 | FEDERAL | GW | P |
| USA 20-399 | 20-15S-10E | 43-007-30591 | 11256 | FEDERAL | GW | P |
| POWELL 30-173 | 30-15S-10E | 43-007-30346 | 11256 | FEE | GW | P |
| USA 30-251 | 30-15S-10E | 43-007-30403 | 11256 | FEDERAL | GW | P |
| USA 30-289 | 30-15S-10E | 43-007-30452 | 11256 | FEDERAL | GW | P |
| USA 30-290 | 30-15S-10E | 43-007-30453 | 11256 | FEDERAL | GW | P |
| USA 31-310 | 31-15S-10E | 43-007-30516 | 11256 | FEDERAL | GW | P |
| USA 31-311 | 31-15S-10E | 43-007-30517 | 11256 | FEDERAL | GW | P |
| UTAH 13-550 | 13-16S-08E | 43-015-30301 | 11256 | STATE | GW | P |
| UTAH 14-551 | 14-16S-08E | 43-015-30330 | 11256 | STATE | GW | P |
| UTAH 14-552 | 14-16S-08E | 43-015-30331 | 11256 | STATE | GW | P |
| UTAH 22-568 | 22-16S-08E | 43-015-30534 | 11256 | STATE | GW | P |
| UTAH 22-570 | 22-16S-08E | 43-015-30536 | 11256 | STATE | GW | P |

## OPERATOR CHANGES DOCUMENTATION

**Enter date after each listed item is completed**

1. (R649-8-10) Sundry or legal documentation was received from the **FORMER** operator on: 01/08/2003
2. (R649-8-10) Sundry or legal documentation was received from the **NEW** operator on: 01/08/2003
3. The new company has been checked through the **Department of Commerce, Division of Corporations Database on:** 02/03/2003
4. Is the new operator registered in the State of Utah: YES Business Number: 562960-0143
5. If **NO**, the operator was contacted contacted on: _____

6. (R649-9-2)Waste Management Plan has been received on: IN PLACE

7. **Federal and Indian Lease Wells:** The BLM and or the BIA has approved the merger, name change, or operator change for all wells listed on Federal or Indian leases on: 01/14/2003

8. **Federal and Indian Units:**
The BLM or BIA has approved the successor of unit operator for wells listed on: 01/14/2003

9. **Federal and Indian Communization Agreements ("CA"):**
The BLM or BIA has approved the operator for all wells listed within a CA on: 01/14/2003

10. **Underground Injection Control ("UIC")** The Division has approved UIC Form 5, **Transfer of Authority to Inject,** for the enhanced/secondary recovery unit/project for the water disposal well(s) listed on: N/A

## DATA ENTRY:

1. Changes entered in the **Oil and Gas Database on:** 02/11/2003
2. Changes have been entered on the **Monthly Operator Change Spread Sheet on:** 02/11/2003
3. Bond information entered in RBDMS on: N/A
4. Fee wells attached to bond in RBDMS on: N/A

## STATE WELL(S) BOND VERIFICATION:

1. State well(s) covered by Bond Number: 8140-60-24

## FEDERAL WELL(S) BOND VERIFICATION:

1. Federal well(s) covered by Bond Number: 8015-16-69

## INDIAN WELL(S) BOND VERIFICATION:

1. Indian well(s) covered by Bond Number: N/A

## FEE WELL(S) BOND VERIFICATION:

1. (R649-3-1) The **NEW** operator of any fee well(s) listed covered by Bond Number 6196922

2. The **FORMER** operator has requested a release of liability from their bond on: N/A
The Division sent response by letter on: N/A

## LEASE INTEREST OWNER NOTIFICATION:

3. (R649-2-10) The **FORMER** operator of the fee wells has been contacted and informed by a letter from the Division of their responsibility to notify all interest owners of this change on: N/A

**COMMENTS:**